OFFICIAL GAZETTE

UNITED STATES PATENT OFFICE

AUGUST
VOL. 853

1968

FH

U.S. DEPARTMENT OF COMMERCE

OFFICIAL GAZETTE of the UNITED STATES PATENT OFFICE

August 6, 1968 Volume 853 Number 1

PATENTS

NOTICES

Board of Appeals Decisions Rendered in the Month of June 1968

Examiner affirmed	121
Examiner affirmed in part	14
Examiner reversed	30
Total	165

Official Mailing Address

The official mailing address for all communications sent to the Patent Office remains:

Commissioner of Patents
Washington, D.C. 20231

The physical location of the Office is 2021 Jefferson Davis Highway, Arlington, Va. This address should not be used on mail sent to the Patent Office.

C. A. KALK,
Director of Administration.

June 25, 1968.

Service by Publication

Louis Malakoff

In accordance with Rule 47(b) of the Rules of Practice of the United States Patent Office in Patent Cases, notice is hereby given of the filing on October 30, 1967, of an application for patent now entitled "FSK Receiver Wherein One Binary Signal Is Represented by a Half Cycle of a Given Frequency and the Other Binary Signal Is Represented by a Full Cycle of Twice That Frequency," on behalf of Louis Malakoff, whose last known address is 3136 Sumatra, Costa Mesa, California. The application was made in compliance with Rule 47(b) and 35 U.S.C. 118 by Collins Radio Company without execution by the said Louis Malakoff. Notice of the filing directed to the above noted address has been returned undelivered.

Any action to be taken by the said Louis Malakoff in connection with the said application must be taken within thirty days of the publication of this notice.

EDWIN L. REYNOLDS,
First Assistant Commissioner of Patents.

Report of the Ad Hoc Committee on Patent Documentation

Reproduced below are the letter of transmittal and the Summary of Principal Conclusions and Recommendations contained in the Report of the Ad Hoc Committee on Patent Documentation recently submitted to Secretary of Commerce Cyrus R. Smith.

Copies of the full report may be obtained from the Clearinghouse for Federal Scientific and Technical Information, Springfield, Va. 22151, for a prepaid fee of $3.00 for a paper copy ($.65 for microfiche), by ordering as PB 178691.

EDWARD J. BRENNER,
Commissioner of Patents.

MAY 8, 1968.

Hon. CYRUS R. SMITH,
Secretary of Commerce
Washington, D.C.

DEAR MR. SECRETARY:

We take pleasure in transmitting to you the report of the Ad Hoc Committee on Patent Documentation. The Committee was established in September 1967 by Secretary Trowbridge to study and make recommendations on Recommendations XXIX and XXX of the Report of the President's Commission on the Patent System.

The Committee has held nine meetings for a total of fifteen days. During this time the Committee interviewed Patent Office officials, Patent Examiners and Patent Classifiers and reviewed previous Patent Office staff studies and planning documents. The Committee appreciates the assistance it received from all of the Patent Office officials consulted.

The members of the Committee sincerely hope that the conclusions and recommendations contained in the report will assist you and the Commissioner of Patents in improving the patent documentation activities of the Patent Office.

Respectfully yours,

PETER F. URBACH, *Chairman.*
MORRIS RUBINOFF.
JAN H. VAN DEN BEEMT.
LOUIS L. LAWRENCE.
JACOB RABINOW.
FRED A. TATE.

SUMMARY OF PRINCIPAL CONCLUSIONS AND RECOMMENDATIONS

(1) The Patent Office is a complex operating organization which has traditionally been inadequately funded and, as a result, has a long history of backlogs, long pendency periods and out-of-date search files. In spite of these and many other long-standing difficulties, the present Patent Office management has made substantial progress toward developing the tools and operating organization which will permit the Patent Office to function on an efficient, business-like basis.

(2) Effective long-range planning is required to provide suitable guidelines for Patent Office management. There is a basic conflict between short-term needs and long-term goals which pervades many of the problems of patent documentation. Many of the fundamental problems of the Patent Office cannot be solved in the short term, and require long-range programs based on sound planning.

(3) Continuity of management and staff is essential to Patent Office operations and should be assured. The position

New Applications Received During May 1968

Patents	8117
Designs	453
Plant Patents	11
Reissues	33
Total	8614

Issue—August 6, 1968

Patents	1000	—No.	3,395,406	to No.	3,396,405, incl.
Designs	81	—No.	211,844	to No.	211,924, incl.
Plant Patents	3	—No.	2,825	to No.	2,827, incl.
Reissues	9	—No.	26,429	to No.	26,437, incl.
Total	1093				

of Commissioner of Patents should offer an opportunity for long-term service.

(4) Additional funding should be aggressively sought to strengthen and improve Patent Office operations. The present Patent Office staff, salary levels and budget are not commensurate with either the magnitude and importance of the tasks to be performed or with the industrial size of the nation.

(5) Sophisticated management tools should be developed. Additional emphasis should be directed at the development and implementation of a management information system. This should lead to the development of quantitative models of the Patent Office's examining operations to permit Patent Office managers to realistically evaluate alternative courses of action.

(6) There should be clear assignment of responsibility for system design. This is particularly important for those operations which cut across organizational lines.

(7) A broad review of the form and content of the patent document should be undertaken to develop a document that will better serve the many needs of classification and search, the technical community and international patent matters.

(8) Studies should be conducted by the Patent Office to determine the effectiveness of the patent document as technical literature, how it can be improved, and how it can be more effectively utilized.

(9) The Patent Office should insist upon much greater clarity of title, abstract, disclosure and claims of the patent application to insure compliance with the existing rules and statutes and to provide clear description of the invention.

(10) The examination quality control program should be extended to cover the quality of the patent search.

(11) There should be a continuing independent review of the quality of the reclassification effort on a sample basis.

(12) Unofficial digests and unofficial subclasses are very important. They should be officially sanctioned and their development encouraged.

(13) The Patent Office should continue the development of the reclassification priority model and extend this model to cover all search techniques. This should be a high priority task for a team of competent full-time analysts and researchers.

(14) The development of a comprehensive and balanced research plan should be the first priority of the Research and Development Group.

(15) The scope of the Research and Development Group should be broadened to include systems studies of the entire patent examining process.

(16) The Research and Development Group should develop working relationships and cooperative programs with outside workers in the field. There are now in existence outside the Patent Office experimental systems demonstrating potential solutions to many of the patent search problems facing both the Patent Office and the public.

(17) The Patent Office should begin now to develop plans for using patents in machine readable form. The present patent printing operations should be converted as soon as possible to operations which will provide a machine readable by-product.

(18) The Department of Commerce should examine all of the technical information dissemination programs of the entire Department to insure adequate coordination among the Bureaus and Agencies within the Department which have an important role to play in scientific and technical information dissemination.

(19) The United States should continue to take an active planned part in international patent cooperation efforts.

PATENT EXAMINING CORPS

R. A. WAHL, Assistant Commissioner

CONDITION OF PATENT APPLICATIONS AS OF JULY 2, 1968

PATENT EXAMINING OPERATIONS AND GROUPS * Denotes date of oldest application for each Operation	Actual Filing Date of Oldest Case Awaiting Action: New	Amended
CHEMICAL EXAMINING OPERATION		
GENERAL CHEMISTRY AND PETROLEUM CHEMISTRY, GROUP 110—M. STERMAN, Director. Metal Inorganic Compounds; Inorganic Compositions; Organo-Metal and Organo-Metalloid Chemistry; Metallurgy; Metal Stock; Electro Chemistry; Batteries; Hydrocarbons; Mineral Oil Technology; Lubricating Compositions; Gaseous Compositions; Fuel and Igniting Devices.	12-27-65	11-19-63
GENERAL ORGANIC CHEMISTRY, GROUP 120—I. MARCUS, Director. Heterocyclic; Amides; Alkaloids; Azo; Sulfur; Misc. Esters; Carbohydrates; Herbicides; Poisons; Medicines; Cosmetics; Steroids; Oxo and Oxy; Quinones; Acids; Carboxylic Acid Esters; Acid Anhdrides; Acid Halides.	2-21-66	5-24-63
HIGH POLYMER CHEMISTRY, PLASTICS AND MOLDING; GROUP 140—L. J. BERCOVITZ, Director. Synthetic Resins; Rubber, Proteins; Macromolecular Carbohydrates; Mixed Synthetic Resin Compositions; Synthetic Resins With Natural Polymers and Resins; Natural Resins; Reclaiming; Pore-Forming; Compositions (Part) e.g.: Coating; Molding; Ink; Adhesive and Abrading Compositions; Molding, Shaping, and Treating Processes.	5-2-66	1-22-64
COATING AND LAMINATING, BLEACHING, DYEING AND PHOTOGRAPHY, GROUP 160—J. R. LIBERMAN, Director. Coating; Processes and Misc. Products; Laminating Methods and Apparatus; Stock Materials; Adhesive Bonding; Special Chemical Manufactures; Special Utility Compositions; Bleaching; Dyeing and Photography.	*10-1-65	*5-1-63
SPECIALIZED CHEMICAL INDUSTRIES AND CHEMICAL ENGINEERING, GROUP 170—W. B. KNIGHT, Director. Fertilizers; Foods; Fermentation; Analytical Chemistry; Reactors; Sugar and Starch; Paper Making; Glass Manufacture; Gas; Heating and Illuminating; Cleaning Processes; Liquid Purification; Distillation; Preserving; Liquid and Solid Separation; Gas and Liquid Contact Apparatus; Refrigeration; Concentrative Evaporators; Mineral Oils Apparatus; Misc. Physical Processes.	2-7-66	2-13-64
ELECTRICAL EXAMINING OPERATION		
INDUSTRIAL ELECTRONICS AND RELATED ELEMENTS, GROUP 210—W. S. COLE, Director. Generation and Utilization; General Applications, Conversion and Distribution; Heating and Related Art Conductors; Switches, Miscellaneous.	3-9-66	3-2-64
SECURITY, GROUP 220—S. BOYD, Director. Ordnance, Firearms and Ammunition; Radar, Underwater Signalling, Directional Radio, Torpedoes, Seismic Exploring, Radio-Active Batteries; Nuclear Reactors, Powder Metallurgy, Rocket Fuels; Radio-Active Material.	3-29-67	1-14-65
INFORMATION TRANSMISSION, STORAGE AND RETRIEVAL, GROUP 230—M. L. LEVY, Director. Communications; Multiplexing Techniques; Facsimile; Data Processing, Computation and Conversion; Storage Devices and Related Arts.	*7-9-65	*6-18-62
ELECTRONIC COMPONENT SYSTEMS AND DEVICES, GROUP 250—W. L. CARLSON, Director. Semi-Conductor and Space Discharge Systems and Devices; Electronic Component Circuits; Wave Transmission Lines and Networks; Optics; Radiant Energy; Measuring.	9-7-65	10-10-62
PHYSICS, GROUP 280—R. L. EVANS, Director. Photography; Sound and Lighting; Indicators and Optics; Measuring and Testing; Geometrical Instruments.	5-10-66	4-1-65
DESIGNS, GROUP 290—S. BOYD, Director. Industrial Arts; Household, Personal and Fine Arts.	9-29-67	10-14-66
MECHANICAL EXAMINING OPERATION		
HANDLING AND TRANSPORTING MEDIA, GROUP 310—A. BERLIN, Director. Conveyors; Hoists; Elevators; Article Handling Implements; Store Service; Sheet and Web Feeding; Dispensing; Fluid Sprinkling; Fire Extinguishers; Coin Handling; Check Controlled Apparatus; Classifying and Assorting Solids; Boats; Ships; Aeronautics; Motor and Land Vehicles and Appurtenances; Railways and Railway Equipment; Brakes; Rigid Flexible and Special Receptacles and Packages.	2-20-67	7-19-65
MATERIAL SHAPING, ARTICLE MANUFACTURING, TOOLS, GROUP 320—N. BERGER, Director. Manufacturing Processes, Assembling, Combined Machines, Special Article Making; Metal Deforming; Sheet Metal and Wire Working; Metal Fusion—Bonding, Metal Founding; Metallurgical Apparatus; Plastics Working Apparatus; Plastic Block and Earthenware Apparatus; Machine Tools for Shaping or Dividing; Work and Tool Holders Woodworking; Tools; Cutlery; Jacks.	10-3-66	1-4-65
AMUSEMENT, HUSBANDRY, PERSONAL TREATMENT, INFORMATION, GROUP 330—A. RUEGG, Director. Amusement and Exercising Devices; Projectors; Animal and Plant Husbandry; Butchering; Earth Working and Excavating; Fishing, etc.; Tobacco; Artificial Body Members; Dentistry; Jewelry; Surgery; Toiletry; Printing; Typewriters; Stationery; Information Dissemination.	7-6-66	5-25-64
HEAT AND POWER ENGINEERING, GROUP 340—C. F. GAREAU, Director. Power Plants; Combustion Engines; Fluid Motors; Pumps; Turbines; Heat Generation and Exchange; Refrigeration; Ventilation; Drying; Vaporizing; Temperature and Humidity Regulation; Machine Elements; Power Transmission.	6-5-67	6-6-66
FIXED CONSTRUCTIONS, SUPPORTS, AND HARDWARE, GROUP 350—T. J. HICKEY, Director. Joints; Fasteners; Rod, Pipe and Electrical Connectors; Miscellaneous Hardware; Locks; Building Structures; Closure Operators; Bridges; Closures; Earth Engineering; Drilling; Mining; Furniture; Receptacles; Supports; Cabinet Structures.	1-24-67	12-8-64
TEXTILES, CLEANING AND FLUID HANDLING, GROUP 360—F. H. BRONAUGH, Director. Fluid Handling, including Valves; Conduits; Filling Receptacles; Lubrication; Joint Packing; Bathroom Fixtures; Centrifugal Separators; Cleaning; Coating; Pressing; Agitating; Foods; Textiles; Apparel and Shoes and their Manufacture; Sewing Machines; Winding and Reeling.	*5-31-66	*5-29-63

Total number of pending applications (excluding Designs) 192,266
Total number of Design applications pending 3,149

Expiration of patents: The patents within the range of numbers indicated below expire during August 1968, except those which may have expired earlier due to shortened terms under the provisions of Public Law 690, 79th Congress, approved August 8, 1946 (60 Stat. 940) and Public Law 619, 83rd Congress, approved August 23, 1954 (68 Stat. 764), or which may have had their term curtailed by disclaimer under the provisions of 35 U.S.C. 253.

Patents .... Numbers 2,562,875 to 2,566,294, inclusive
Plant Patents .... Numbers 1,024 to 1,034, inclusive

DECISIONS IN PATENT AND TRADEMARK CASES

U.S. Court of Customs and Patent Appeals

IN RE JIMMIE L. HUITT AND BRUCE B. MCGLOTHLIN

No. 7730. Decided April 13, 1967

[54 CCPA 1417; 374 F.2d 484; 153 USPQ 284]

1. PATENTABILITY—REFERENCE—CONSTRUCTION OF REFERENCE DISCLOSURE.

"We think Clark's disclosure that 'Krumbein roundness of at least 0.7, is preferred' would clearly suggest to any person skilled in the art that a Krumbein roundness slightly greater than 0.7 would be even more preferred than 0.7 itself."

2. SAME—OBVIOUSNESS—35 U.S.C. 103.

"It is frequently true, in general life as well as in the field of invention, that optimum results are achieved by pursuing the path of moderation and avoiding the extremes of suggested ranges. This is precisely the case here, where appellants have discovered that 'the best compromise' lies at the midpoint, 0.8 to 0.9, of the relatively narrow range, 0.7 to 1.0, which is clearly suggested by the prior art. We consider this discovery to be one which, 'as a whole,' is obvious under 35 U.S.C. 103."

3. SAME—PARTICULAR SUBJECT MATTER—"IMPROVEMENTS IN METHOD OF FRACTURING UNDERGROUND FORMATIONS AND PROPPING AGENT THEREFOR."

The refusal of certain claims in an application entitled "Improvements in Method of Fracturing Underground Formations and Propping Agent Therefor," as unpatentable over the prior art, is affirmed.

AFFIRMED.

Paul L. Tillson (*Meyer Neishloss*, of counsel) for appellants.

Joseph Schimmel (*L. F. Parker*, of counsel) for the Commissioner of Patents.

Before WORLEY, *Chief Judge*, RICH, SMITH, and ALMOND, *Associate Judges*, and Judge WILLIAM H. KIRKPATRICK *

ALMOND, *J.*, delivered the opinion of the court.

This is an appeal from the decision of the Board of Appeals affirming the prior art rejections of claims 1, 3, 4, 6, 13, 15, 23, and 24 of appellants' application Serial No. 106,473, filed May 1, 1961, for "Improvements in Method of Fracturing Underground Formation and Propping Agent Therefor." No claim has been allowed.

Appellants' invention relates to a method of hydraulically fracturing subsurface formations penetrated by well bores to increase the production of fluids therefrom and to a propping agent to be placed in the fracture to hold it open. Such methods are designed to improve production from the well by either creating new flow channels or enlarging existing ones. To accomplish hydraulic breakdown of the producing sections, a thickened fluid having a propping agent consisting of finely divided particles of material suspended therein is injected into the well bore under pressure high enough to overcome the tensile strength of the formation to be fractured. After fracturing occurs, the propping agent carried by the fluid is deposited in the fracture to hold it open. Propping agents such as sand or ground nutshells have been used in this art prior to appellants' invention.

In the invention here claimed, the propping agent used is ground nutshells or granular hard plant seeds such as peach seeds, the particular novelty asserted being in the selection of such materials to provide a particle size in the range of 4 to 40 mesh screen and having

* Senior District Judge, Eastern District of Pennsylvania, sitting by designation.

an average Krumbein roundness and sphericity in the range of 0.8 to 0.9.

Appellants' specification defines the terms "Krumbein roundness and sphericity" as follows:

> The term "sphericity" * * * is equal to the ratio of the nominal diameter of a particle to the maximum intercept of the particle. The nominal diameter of the particle is the diameter of a sphere having the same volume as the particle. The maximum intercept of the particle is the diameter of a sphere circumscribing the particle. The roundness of a particle is the ratio of the average radius of corners and edges of the particle to the radius of the maximum inscribed circle. * * *

It is immediately apparent from inspection of the above definitions that the maximum roundness and sphericity value of 1.0 is attained when the particle has the shape of a perfect sphere.

Claims 1, 3, 4, 6 and 23 are drawn to appellants' propping agent and claims 13, 15, and 24 are directed to a method of fracturing a subterranean formation and propping the fracture open using the propping agent. Claims 1 and 13 are illustrative and read as follows:

> 1. An agent for propping open a fracture in a subsurface formation comprising particles of a hard material selected from the group consisting of nutshells and seeds of fruits, said material having a high compressive strength and the character of deforming without shattering when subjected to compressive load, said particles having an average sphericity and roundness between 0.8 and 0.9 and a size such that said particles pass a No. 4 screen and are retained on a No. 40 screen of the U.S. Sieve Series.
>
> 13. A method of fracturing a subterranean formation and propping the fracture open to increase the flow of fluids into a well penetrating said formation comprising pumping a liquid containing a fluid loss reducing additive down the well and applying pressure to said liquid adequate to create a fracture extending from the well into the formation, displacing a liquid containing a fluid loss reducing additive and 0.2 to 0.5 pound of propping agent per gallon of liquid into the fracture adapted to deposit said propping agent in a partial monolayer in said fracture, said propping agent comprising a hard material selected from the group consisting of nutshells and seeds of fruits, said materials having a high compressive strength and the character of deforming without shattering when subjected to compressive load, the particles of said propping agent having a size in the range of 4 to 40 mesh and being further characterized by an average Krumbein roundness and sphericity in the range of about 0.8 to 0.9, and thereafter releasing the pressure on the well.

The references relied upon to support the rejections are:

Clark et al., 2,838,116, June 10, 1958.
Scott et al., 2,943,680, July 5, 1960.
McGuire et al., 2,950,247, August 23, 1960.
Morse, 2,962,095, November 29, 1960.

The Examiner rejected product claims 1, 3, 4, 6, and 23 as unpatentable over Scott and all appealed claims as unpatentable over Morse in view of Clark with further reference to McGuire under 35 U.S.C. 103. We do not find it necessary to consider the former ground of rejection since we hold that the latter ground is worthy of affirmance.

Morse teaches the general principle that fractures formed and extended by hydraulic methods "are normally filled or held open by depositing therein a solid granular medium which has a substantial compressive strength and is highly permeable to fluid flow." With regard to the materials, sizes, and shapes of his propping agents, Morse discloses:

> As examples of such organic materials may be mentioned *ground hard fruit stones, nutshells* * * * preferably formed or ground to approximately uniform sizes * * * *a screen size between about 8 and about 40-mesh being preferred.* The more nearly uniform in size the particles are within this range the greater

is the permeability of the fracture that is filled with them. It is *also highly desirable that the shape* of the particles *be rounded* so as to be cylindrical or *spherical*, and when manufacture particles are employed such shapes can be easily provided. [Emphasis ours.]

Thus, Morse teaches the use of the same materials employed by appellants as propping agents, and a "preferred" size range of 8 to 40 mesh, which is only slightly narrower than appellants' claimed range of 4 to 40 mesh, with the same preferred upper limit on particle size. Although Morse does not teach in terms of numerical values for roundness and sphericity, it is clear from the definitions quoted above from appellants' specification that the "spherical" particles said to be "highly desirable" possess the maximum Krumbein roundness and sphericity of 1.0. Appellants acknowledge in their brief that "the effective teaching of Morse is that spherical propping agents; that is, propping agents having a roundness and sphericity of 1.0 are preferred."

McGuire teaches the use as propping agents of large particle size materials of "generally spherical" shape. Such particles, like those of Morse, would have a roundness and sphericity of 1.0. McGuire also discloses the preferred practice of depositing the propping agent particles in the fracture as a monolayer. The patent also speaks of the disadvantages inherent in the use of sand as a propping agent and the desirability of using other materials of appropriate size and "generally spherical" shape and having higher compressive strength than sand.

Clark discloses the use of a propping agent, typically sand, in the amount of 0.5 to 10 pounds per gallon of fracturing liquid. With regard to the shape of his propping agent particles, Clark states:

A *well rounded* sand, typically a sand having a *Krumbein roundness of at least 0.7, is preferred. Roundness in this range* or lack of angularity appears to decrease the tendency to bridging of the sand or "sanding out" in the fracture whereby the sand is filtered out of the fracturing liquid and deposited in or adjacent to the well. The size of propping agent also is important * * *. [Emphasis ours.]

Since no upper limit is expressly stated for "this range" which is "preferred" by Clark, the range could be interpreted as either a definite or indefinite one. If the range is considered in its broadest, but definite sense, it extends from the lower limit of 0.7 to the maximum upper limit of 1.0, the Krumbein roundness and sphericity of a perfect sphere, particles of which shape are preferred by Morse and McGuire. In that event, appellants' claimed range of 0.8 to 0.9 embraces the only two values in the preferred definite range which are not clearly anticipated by the prior art, which discloses the two extremes of this narrow range, i.e. particles "having a Krumbein roundness of at least 0.7" (Clark) and "spherical" (Morse) or "generally spherical" (McGuire) particles, which by definition possess roundness and sphericity of 1.0.

Alternatively, "this range" which Clark discloses to be "preferred" may be interpreted in a narrow, indefinite manner to include 0.7, certainly the next adjacent higher value, 0.8, and possibly the next higher value, 0.9, which the Solicitor in his brief asserts to be "the next value after 0.7 on the Krumbein visual indicator scale."

[1] We think Clark's disclosure that "Krumbein roundness of at least 0.7, is preferred" would clearly suggest to any person skilled in the art that a Krumbein roundness slightly greater than 0.7 would be even more preferred than 0.7 itself. The next two values greater than 0.7 are both embraced by appellants' claimed range of 0.8 to 0.9.

The Huitt affidavit of record shows that those skilled in the art know that sand having a roundness as low as 0.5 can be used as a propping agent. However, it is generally true that a preferred range is narrower in scope than the broadest operable range, and the fact that the operable roundness range for sand is 0.5 to 1.0 does not in any way detract from Clark's effective teaching that "this range" which he "preferred" is either 0.7 to the maximum value of 1.0 or 0.7 to slightly greater than 0.7, e.g. 0.8 or 0.9. Regardless of whether Clark's preferred range is interpreted to have the definite upper limit of 1.0 or an indefinite upper limit such as 0.9, we agree with the Examiner's position, also quoted with approval by the Board, that:

* * * to select a particular roundness and sphericity range within this [narrow] range suggested by the prior art which produces optimum results would be within the purview of one skilled in the art, and to so use particles having such a roundness and sphericity would not patentably distinguish over the art under 35 U.S.C. 103. * * *

In their brief appellants acknowledge the "suggestion by Clark et al. of using sand having a roundness higher than 0.7 resulting from the use of the term 'at least 0.7,' " but urge that the affidavits of record "show extensive research over several years before the appellants made their invention, commercial success, and acknowledgement by the industry of appellants' contribution." We have considered appellants' proofs of these relevant "secondary considerations," *Graham* v. *John Deere Co.*, 383 U.S. 1, 17–18, 148 USPQ 459, 467, but under the particular circumstances of this case these factors do not persuade us that the claimed subject matter is nonobvious under 35 U.S.C. 103, just as the Supreme Court was not persuaded by proof of similar factors in a companion case heard and decided concurrently with *Graham*, namely *Calmar, Inc.* v. *Cook Chemical Co.*, 383 U.S. at 35–6, 148 USPQ at 474. We think it is also worthy of mention here that three of the four prior art patents relied on by the Patent Office issued in the latter half of 1960, less than one year before appellants' filing date of May 1, 1961. Thus, we are not faced with a situation where the information disclosed by these patents was made available to the public long prior to the date of appellants' invention. See *Calmar, Inc.* v. *Cook Chemical Co.*, supra.

In summary, we are in full accord with the following analysis by the Examiner of the fact situation in this case:

* * * the Morse and Clark et al. references definitely point the way to the use of rounded and spherical shaped nutshell propping agents and broadly suggest a [narrow] range with respect to roundness and sphericity of .7 to 1.0 which encompasses the presently claimed range. It is the Examiner's position that the use of particles having a roundness and sphericity within this range (e.g. .8–.9) which represents the best compromise between reduced tendency to screen out on the one hand and good fluid flow capacity on the other would be well within the purview of one skilled in the art with the teachings in the references before him.

[2] It is frequently true, in general life as well as in the field of invention, that optimum results are achieved by pursuing the path of moderation and avoiding the extremes of suggested ranges. This is precisely the case here, where appellants have discovered that "the best compromise" lies at the midpoint, 0.8 to 0.9, of the relatively narrow range, 0.7 to 1.0, which is clearly suggested by the prior art. We consider this discovery to be one which, "as a whole," is obvious under 35 U.S.C. 103. **[3]** Therefore, the decision of the Board is affirmed.

AFFIRMED.

SMITH, *J.*, dissenting, with whom RICH, *J.*, joins.

My disagreement with the majority arises from a difference in point of view as to what the prior art taught one of ordinary skill in the art prior to appellants' invention. 35 U.S.C. 103 requires a consideration of facts upon which the ultimate legal conclusion of obviousness is based. Considering the claimed subject matter in view of the facts of record, I find the Board's conclusion of obviousness to be unsupported by the necessary facts, *Graham* v. *John Deere Co.*, 383 U.S. 1, 148 USPQ 459.

Simply stated, appellants' invention is a propping agent and a method for propping subsurface fractures formed by hydraulically fracturing a subsurface formation as in oil bearing strata. The purpose of the invention is to increase the production of fluids from wells drilled into such formations. To prevent closure of the fractures upon release of the fracturing pressures, propping agents have been placed in such fractures. When a subsurface formation is correctly fractured and propped open, production from the well, either by creating new flow channels or enlarging existing flow channels, is improved. This is a highly developed technical art in which hydraulic breakdown of producing subsurface sections is accomplished by the use of a thickened fluid having the propping agent therein. The propping agent consists of finely divided particles of material suspended in the fluid and injected with the fluid into the well bore under pressures high enough to fracture the adjoining subsurface formations. After fracturing occurs, and upon release of the fracturing pressure on the fluid, the propping agent remains in the fracture and holds it open. Prior to appellants' invention, propping agents such as sand or ground nutshells have been so used.

There were technical problems in using the prior art propping agents. These problems were met and overcome by the invention here claimed and in which the propping agent used is ground nutshells or the granular shells of hard shelled plant seeds such as peach stones. The particular novelty here asserted lies in the selection of such materials to provide a particle size in the range of 4 to 40 mesh screen and having a Krumbein roundness and sphericity in the range of 0.8 to 0.9. I respectfully differ from the majority in finding that either an understanding of the problem in the art or the provision of the particular size, range and shape of propping agents was obvious under the conditions specified in 35 U.S.C. 103.

To understand the basis for this dissent, it is necessary to consider in more detail than has the majority (1) the precise nature of appellants' invention and (2) the prior art teachings.

The nature of appellants' invention

Appellants' invention has its genesis in an understanding of the problems created by the technical shortcomings of the prior art. In their specification they discuss the prior art use of sand and other propping agents and they also describe their invention in relation thereto as follows:

> Sand has several shortcomings as a propping agent. In addition to the screening out mentioned above, the sand particles will not deform when subjected to the weight of the overburden after the pressure on the fracturing fluid is released. If the formation fracture is soft, the sand particles become embedded in the formation thereby allowing the fracture to close partially and causing a reduction in the fluid carrying capacity of the fracture. If the formation is hard, the sand particles are crushed by the weight of the overburden into very fine particles which have little effect in holding the fracture open and plug openings between larger particles to produce a fracture of low permeability.
>
> Propping agents of crushed woody materials, such as walnut shells, have been used to avoid some of the difficulties encountered with sand. The woody materials are deformed slightly by the application of pressure and do not embed as deeply in soft formations as sand particles. Moreover, the woody materials, when subjected to high pressures, tend to be squashed into a pancake rather than break into fine particles which are removed from the fracture by the fluids produced from the fractured formation. However, crushed nut shells ordinarily cause more difficulty with screening out than sand.
>
> We have discovered that hard, woody particles, such as crushed nut shells of suitable size having a very narrow range of sphericity and roundness, as those terms are hereinafter defined, are particularly effective materials for propping fractures in that screening out of the propping agent is avoided and fractures of high fluid flow capacity are obtained. It is an important characterisitc of the novel propping agents of this invention that they have an average sphericity and roundness of at least 0.8. We have further discovered that increase in sphericity and roundness above about 0.9 cause a surprising and rapid reduction in the fluid flow capacity of the fractures propped with such woody particles of extremely high sphericity and roundness. The novel propping materials of this invention have an average sphericity and roundness in the range from 0.8 to about 0.9.

The terms "sphericity" and "roundness" appear in the claims and are carefully defined in appellants' specification by reference to the publication "Stratigraphy and Sedimentation" by Krumbein and Sloss, pages 78 through 83, published by W. H. Freeman Company, 1951 edition.

Thus we find the term "sphericity" is defined as being "equal to the ratio of the nominal diameter of a particle to the maximum intercept of the particle." The nominal diameter of the particle so referred to is defined as "the diameter of a sphere having the same volume as the particle." The "maximum intercept" of the particle is defined as "the diameter of a sphere circumscribing the particle." The roundness of a particle is "the ratio of the average radius of corners and edges of the particle to the radius of the maximum inscribed circle."

The prior art and section 103

The disclosures of the prior art, when considered in relation to appellants' invention as a whole, do not support the rejection under the conditions specified in 35 U.S.C. 103. Morse discloses processes of oil recovery which utilize combustion within the reservoir for generating heat and assisting in the recovery of oil. By any standard, the teachings of Morse require a very different type of propping agent from that disclosed and claimed by appellants. According to Morse:

> * * * During fracturing there is introduced into the fractures and deposited therein a material to maintain the fractures open and permeable until the arrival of a combustion zone, when the material will then be affected by the combustion or its associated temperature rise to reduce the fracture permeability substantially or to seal it completely. *This material is preferably a rigid, granular solid capable of acting as a support or prop to hold the fracture open, but susceptible to being altered, softened, or consumed by the combustion or the heat thereof to have its compressive strength or supporting ability destroyed so that the fracture closes itself or becomes sealed by the softening and flow of the introduced material.*
>
> * * * Ahead of the propagating combustion zone in the direction of its propagation, the flow of fluids is primarily along the fractures, while *behind the combustion zone or after it has passed, the fractures are substantially sealed and the flow of fluids is through the burned-out formation.* [Emphasis added.]

Morse discloses nutshells as propping agents stating:

* * * These are preferably formed or ground to approximately uniform sizes which are neither very large nor very small, a size corresponding to a screen size between about 8 and about 40-mesh being preferred. The more nearly uniform in size the particles are within this range the greater is the permeability of the fracture that is filled with them. It is also highly desirable that the shape of the particles be rounded so as to be cylindrical or spherical, and when manufactured particles are employed such shapes can be easily provided.

The parties appear to agree that Morse teaches propping agents having a roundness and sphericity of 1.0 are preferred. Additionally, appellants submitted the affidavit of patentee Morse wherein he explains:

The reference * * * to particles of cylindrical or spherical shape was to manufactured particles such as those made of plastics or metal which could readily be made in desired shapes to produce a multilayer pack of substantial permeability. In making such reference, the criterion was only the ease of manufacture and no consideration was given to whether or not the particles could be readily displaced into the fracture.

It thus seems Morse considered propping agents having a roundness and sphericity of 1.0 would yield higher permeability in fractures. While the Solicitor argues Morse's remarks in the affidavit are "irrelevant" and "self-serving," I do not find anything in the above remarks inconsistent with either the Morse specification or any argument advanced by the Solicitor as to the merits of the rejection. Where an affidavit does not controvert the teachings of the prior art relied on by the Patent Office, its position is not diminished in absence of a challenge of some sort to the affidavit.

Clark discloses processes for fracturing formations to increase fluid productivity employing fracturing fluids and propping agents. According to Clark:

A well rounded sand, typically a sand having a Krumbein roundness of at least 0.7, is preferred. Roundness in this range or lack of angularity appears to decrease the tendency to bridging of the sand or "sanding out" in the fracture whereby the sand is filtered out of the fracturing liquid and deposited in or adjacent to the well. The size of propping agent also is important, particularly with regard to the size of the bridging material. * * * props having a wide particle size range will not support as much load without crushing as substantially uniform particles. Accordingly, the propping agent preferably has a particle size distribution of less than about 40 mesh units, typically less than about 20 mesh units. * * *

McGuire discloses large-size propping agents. According to McGuire, the propping agents are,

* * * manufactured, formable materials selected from the group consisting of metallic, ceramic, and plastic particles of generally spherical shape having a diameter in excess of 0.03 inch, and preferably in excess of 0.08 inch, and which are capable of supporting a load above 40 pounds per particle, and preferably above 100 pounds per particle, without fragmentation.

McGuire further discloses:

The advantages of employing the large size propping agents contemplated by the present invention may be illustrated by a comparison of the permeabilities which can be obtained when propping agents of conventional size are employed with the permeabilities which can be obtained by the use of the propping agents of the present invention. * * *

Further facts of record are as follows: An affidavit by Huitt was offered to show that those skilled in the art knew that sand having a roundness as low as 0.5 can be used without difficulty concerning screening out. The Huitt affidavit also is alleged to set forth facts demonstrating the commercial success of the invention.

Additionally, in appellants' specification test data is set forth which allegedly proves that the phenomena of screen out is directly dependent upon sphericity and roundness. Thus screen out is decreased by increasing sphericity and roundness. Further test data allegedly proves that flow capacity of a propped fracture is indirectly dependent upon sphericity and roundness. Thus flow through a propped fracture decreases as sphericity and roundness are increased. No challenge has been made as to the accuracy of these factual demonstrations.

Appellants' factual demonstrations appear to be reasonable assertions of fact which have not been challenged and I accept them as such. Thus, I find the present record supports appellants' position that they have discovered there is an optimum range of sphericity and roundness in the particles of the propping agent which controls the tendency towards screening out without unduly decreasing the flow capacity of the fractures. Their discovery resides in their finding that this optimum range for sphericity and roundness is 0.8 to 0.9, and this is the only range claimed in the appealed claims. The Patent Office position is that the selection of this range is obvious from the prior art of record. The Board stated:

* * * We accept, as our own, the Examiner's position which is stated as follows:

"* * * to select a particular roundness and sphericity range within this range suggested by the prior art which produced optimum results would be within the purview of one skilled in the art, and to so use particles having such a roundness and sphericity would not patentably distinguish over the art under 35 U.S.C. 103."

As stated in *In re Aller et al.*, 42 CCPA 824 * * * 220 F.2d 454; 105 USPQ 233, "where the general conditions of a claim are disclosed in the prior art, it is not inventive to discover the optimum or workable ranges by routine experimentation." Moreover, the lower limit of 0.8 with respect to the roundness and sphericity is amply suggested from the teaching of the references.

It seems to me the Board's position rests on an exaggerated view of the reference teachings which it finds to be favorable to its position. Clark states as to sand "a Krumbein roundness of at least 0.7 is preferred." Morse states nutshells should be "rounded so as to be cylindrical or spherical." McGuire states large-sized manufactured propping agents should be "generally spherical." *Nothing more is said in the above references concerning particle shape.* The majority would have us believe that Clark suggests a lower limit while Morse and McGuire suggest an upper limit and it would be well within the ordinary skill of the art to ascertain the optimum range.

This reasoning begs the question. Discovering the point or range of criticality may be very simple *after* someone had first discovered that such a critical relationship exists. As I view it, it is this first discovery that appellants have attempted to claim.

The Board relied on *In re Aller*, supra, which in fact is contrary to the Board's conclusion. Therein the applicant had taken a prior art process and lowered the operating temperatures and increased the sulphuric acid concentrations. This new process allegedly resulted in increased yields and shortened reaction times. The Patent Office introduced *facts* demonstrating that the manipulation of temperature and acid concentrations as the applicant had done would be expected to

result in increased yields and shortened reaction times. The court found the applicant's evidence insufficient to demonstrate that the claimed results were unexpected. The opinion points out, 42 CCPA at 828, 830, 105 USPQ at 236, 237:

* * * Appellants have not shown anything "critical" about their process, unless lower temperatures and higher acidity generally are critical.

* * * * * * *

If it could be held that the skilled chemist would never think to reduce the temperature or increase the acid concentration, then it might be held that [patentable] invention resides in so doing.

Here, as distinguished from the situation in the *Aller* case, the Patent Office does not challenge appellants' proof that screen out is diminished and flow capacity is decreased as roundness and sphericity are increased. There is no evidence that these results would be expected or suggested by the prior art. Nothing in the prior art would suggest to one of ordinary skill that an optimum range of roundness and sphericity existed. There exists a hiatus between proof that the prior art preferred rounded particles as propping agents and proof that the optimum range claimed existed in establishing obviousness under section 103.

I therefore find appellants' discovery to be unobvious in view of Clark, Morse and McGuire. Accordingly, the Board's decision as to these claims should be reversed.

Claims 1, 3, 4, 6 and 23

These claims were rejected as being "unpatentable over" Scott who discloses that certain plant seeds can be used to "bridge and seal natural or artificially created fractures to prevent excessive loss of the liquids from the wells." Scott discloses "substantially all the additive particles should pass a number 4 screen and be retained on a number 100 screen." The specification also states:

A large proportion of crevices in formations penetrated by wells can be bridged by particles in the range from 10 to 40 mesh; therefore, it may be desirable to employ an additive containing as much as about 90 percent of particles in this range, the only other particles being about 10 percent of fines in the 40- to 100-mesh range. Preferably, however, a larger percentage of particles in the 40- to 100-mesh range, for example 20 percent to 25 percent, should be used, reducing the concentration of from 10- to 40-mesh material to about 75 or 80 percent. * * *

As to shape, Scott states the particles "should have an average sphericity factor [Krumbein] of at least about 0.4 and an average roundness factor [Krumbein] of not more than about 0.6."

Up to this point it is clear that appellants and Scott are concerned with different objectives. Scott desired to seal fractures while appellants desire to avoid screening out and achieve high permeability in the fracture. Both propose the use of nutshells within substantially the same screen size.

However, to demonstrate sealing and the importance of angularity, Scott discloses test data wherein the sealing ability of different shaped black walnut shells is demonstrated. Two samples were prepared, each containing 75% of the 4 to 40 screen size particles and 25% of the 40 to 100 screen size particles. The "angular particles" of Scott's *invention* "had a Krumbein sphericity of about 0.7, and a Krumbein roundness of about 0.2. For the rounded particles, the comparable figures were 0.8 and 0.8, respectively." The angular particles withstood a pressure of 2300 p.s.i. while the rounded particles withstood zero pressure. It is Scott's disclosure of *rounded particles* as described above that the Patent Office relies on as apparently anticipating the invention, 35 U.S.C. 102(a).

The Board reasoned as follows:

* * * We fully agree with the Examiner that, due to the term "comprising," the claims do not exclude the 40 to 100 mesh particles of the composition shown in Example 5, column 10 of the Scott et al. patent. * * *

We will not, however, sustain the rejection of claim 23 as unpatentable over Scott et al. Claim 23, because of the use of the term "consisting," excludes the 40 to 100 mesh particles of Scott et al. Thus not only is the claimed composition new * * * but the McGlothlin affidavit clearly demonstrates that it produces unexpected results.

Appellants argue as follows:

It is submitted that the proper interpretation of claims 1, 3, 4, and 6 is that they are open to the inclusion of materials *other than* the certain hard, deformable materials, but that *all* particles of the certain hard, deformable materials ***must*** pass a No. 4 screen and be retained on a No. 40 screen, and the particles must have an average roundness and sphericity of between 0.8 and 0.9 * * * [Emphasis added.]

* * * * * * *

the 40 to 100 mesh particles of Scott et al. are smaller particles that would pass through a 40 mesh screen, hence the Scott et al. composition is excluded.

There is a reason for defining the appellants' invention in the manner of claims 1, 3, 4 and 6. Propping agents are frequently used with spacer materials that are soluble in formation fluids to aid in the spacing of the propping agents throughout the fracture. During production from the well, the spacer particles are dissolved to leave larger openings between the propping agent particles within the fracture. To require the appellants to define their invention in the manner used in claim 23 would invite unauthorized use of the appellants' novel propping agents. It has long been recognized that no particular form of claim is required if the meaning of the claim is clear. *Brown* v. *Guild*, 90 U.S. 181.

* * * By reversing the Examiner's rejection of claim 23 as unpatentable over the Scott et al. patent, the Board of Appeals has also recognized the failure of the Scott et al. patent to suggest the appellants' invention * * *. Hence, the only issue pertinent to the rejection of claims 1, 3, 4, and 6 on Scott et al. is whether those claims exclude the Scott et al. composition. * * *

It is apparent that the Board was of the view that "consisting" always excludes and "comprising" always allows the inclusion of other substances in a claim. Appellants' claims therefore were found to "read on" the disclosure in Scott and were thus anticipated, 35 U.S.C. 102(a). Appellants, in substance, argue that under technical claim construction "comprising" may sometimes include *and* exclude. Further, the nature of their invention requires the claim form used and as Scott fails to suggest their invention, the issue is whether the claims exclude the Scott composition.

It seems to me the proper course is not to add further technicalities to the now complex task of interpreting claims. In view of appellants' explanations, I find no objection in view of Scott as to the manner in which appellants' invention is defined. See *In re Bridgeford*, 53 CCPA —, 357 F.2d 679, 149 USPQ 55. More importantly, Scott is clearly *not an enabling disclosure of appellants' invention. In re Brown*, 51 CCPA 1254, 329 F.2d 1006, 141 USPQ 245. The Scott disclosure does not describe or render appellants' invention obvious. 35 U.S.C. 102(a), 103. Scott *teaches* what Clark stated, i.e., "bridging agents" are "typically * * * more angular" than propping agents and propping agents yield greater permeability and less resistance to pressure.

The decisions of the majority and the Board rest on a factual basis for which I do not find support in this record. I would reverse the decision of the Board.

U.S. Court of Customs and Patent Appeals

IN RE FRITZ UHLIG

No. 7784. Decided May 4, 1967

[54 CCPA 1300; 376 F.2d 320; 153 USPQ 460]

1. PATENTABILITY—REFERENCE—REFERENCE DISCLOSURE NOT LIMITED BY ITS EXAMPLES.

"A disclosure in a reference is not limited to its specific illustrative examples, but must be considered as a whole to ascertain what would be realistically suggested thereby to one of ordinary skill in the art."

2. REJECTION—BASIS—AFFIDAVIT UNDER RULE 107.

"Nor do we find any error in the Examiner's and Board's refusal to supply appellant with an affidavit under Patent Office Rule 107. * * * The Examiner also supported his views with citations from the Wakeman, Mellan and Schildknecht references * * *. Under the circumstances, it seems apparent that the knowledge relied on by the Examiner is nothing peculiarly within the personal knowledge of a Patent Office employee as appellant alleges, but is a matter of common knowledge in the art."

3. PATENTABILITY—PARTICULAR SUBJECT MATTER—"PROCESS FOR THE PREPARATION OF PRINTING PLATES."

The refusal of certain claims in an application entitled "Process for the Preparation of Printing Plates," as unpatentable over the prior art, is affirmed.

AFFIRMED.

James E. Bryan for appellant.

Joseph Schimmel (*Jack E. Armore*, of counsel) for the Commissioner of Patents.

Before WORLEY, *Chief Judge*, RICH, SMITH, and ALMOND, *Associate Judges*, and Judge WILLIAM H. KIRKPATRICK [1]

WORLEY, *Chief Judge*, delivered the opinion of the court.

This is an appeal from the decision of the Board of Appeals affirming the Examiner's rejection of process claims 1–8, 10 and 11 and article claims 14–16 in appellant's application [2] entitled "Process for the Preparation of Printing Plates."

The application relates to processes for producing printing plates by an electrophotographic technique, and to the printing plate so prepared. The process includes coating a support layer with a photoconductive insulating material, the latter containing organic photoconductors dispersed in insulating resins having groups that confer alkali solubility. An electrostatic charge is uniformly applied to the photoconductive insulating layer in the dark, and the layer is then photographically exposed to an original of which a copy is desired. Where light strikes, the photoconductive layer becomes conductive and the charges in that area drain away in proportion to the intensity of illumination, leaving an electrostatic latent image in the non-illuminated areas. Appellant applies an alkali-resistant developer powder which is electrostatically attracted to the latent image, fixes the powder in a conventional manner by heating, and subsequently treats the imaged surface with alkaline liquids to remove the photoconductor and alkali-soluble resin coating from the non-image areas. The image areas, formed by the alkali-resistant, oleophilic developer powders, attract ink; the image free areas, now consisting of the paper or aluminum support from which the alkali-soluble insulating resin has been re-

[1] Senior District Judge, Eastern District of Pennsylvania, sitting by designation.
[2] Serial No. 15,279, filed March 16, 1960.

moved, are hydrophilic and preferentially attract water. The subject matter is reflected in claims 1, 7, 8 and 14:

1. A process for preparing a printing plate which comprises treating with an alkaline liquid a supported, uniform, homogeneous, thin layer comprising an organic photoconductor and an alkali-soluble resin, the layer having fixed alkali-resistant image areas and alkali-soluble image-free areas thereon, whereby the image-free areas are removed from the support.

7. A process according to claim 1 in which the alkaline liquid contains a thickener.

8. A process according to claim 1 in which the alkaline liquid contains a water-soluble silicate.

14. A printing plate comprising a base material having hydrophilic non-image areas and oleophilic image areas thereon, the latter comprising an alkali-resistant layer fixed to a supported, uniform, homogeneous, thin, intermediate layer comprising an organic photoconductor and an alkali-soluble resin.

The references are:

Ayers, 2,233,573, Mar. 4, 1941.
Sus et al., 3,041,165, June 26, 1962 (filed July 2, 1957).
Sugarman (Australia), 210,374, Sept. 12, 1957.
Wakeman, The Chemistry of Commercial Plastics, 1947, page 249.
Mellan, Industrial Solvents, 2nd edition, 1950, pages 400, 423 and 424.
Schildknecht, Vinyl and Related Polymers, 1952, page 299.

The Examiner rejected claims 14–16 as "fully met by Sus," presumably under 35 U.S.C. 102(e). He noted that Sus discloses coating an organic photoconductor-resin mixture onto a paper or aluminum support; charging the layer; exposing; developing the electrostatic image with an ink-attracting developer powder; fixing the powder image, and using the resultant material to form printing plates. Sus states:

After being fixed these electrophotographic images can be converted into printing plates: the support, e.g., the paper or plastic foil, is wiped over with *a solvent* for the photoconductive layer, *e.g.*, ethyl alcohol, or acetic acid and then rinsed with water and rubbed in with greasy ink in known manner. In this way positive printing plates are obtained which can be set up in an offset machine and used for printing. They give very long runs. [Emphasis supplied.]

While the Examiner conceded that Sus is "completely silent as to the alkali-resistance of the developer powder and the alkali-solubility of * * * [the] resins" used, he noted that the alkali-resistant developer powder disclosed by appellant appears to be no different than that employed by Sus or the art generally, and that the specific resin materials disclosed by appellant as binders for the organic photoconductor are also disclosed by Sus.[3] "Since both the outer and intermediate layers of the image areas of the Sus * * * printing plate may be of the same materials as disclosed * * * [by appellant]," said the Examiner, "it is believed that the Sus * * * teaching includes a printing plate that has all the structure and is made of the materials set forth in these claims."

[3] The Examiner observed that appellant states in his specification that the latent electrostatic image may be "developed in known manner with a pigmented resin powder of the type commonly used." It appears from the record that both appellant and Sus use a polystyrene/rosin mixture to which carbon black has been added for that purpose.

The Examiner also pointed out that both Sus and appellant disclose the use of phthalate resins, maleic acid resins, alkyd resins and colophony modified resins as binder materials for the organic photoconductor, and stated in summary:

* * * It is considered, therefore, that the [fixed developer powder] image areas of Sus * * * inherently have the alkali-resistance called for in these claims and that at least those [binder] resins named in Sus * * * that are also named in this application are alkali soluble. The resistance to, or solubility in, any specific solvent or type of solvent is an innate, inherent characteristic of a material, regardless of whether * * * this is or is not mentioned either in the reference relied upon or in the instant specification. * * *

The Examiner viewed the subject matter of process claims 1–7, 10 and 11 to be obvious in view of Sus, stating:

> * * * It is believed that one skilled in the art, knowing what conventional expedients there are in the art (as evidenced by the background references of record herein) and having the teaching of Sus * * * before him, would find it to be obvious to choose a suitable alkaline liquid (including the specific conventional types of such resin solvents called for in dependent claims 2 to 6) as a substitute for the solvents that are specifically named as examples of suitable ones in Sus * * *.

Noting that appellant discloses no specific advantage or reason for the "thickener" recited in claim 7, the Examiner regarded it to be obvious to place a thickener in the alkaline liquid if it were desirable to thicken it. He rejected claim 8 as "unpatentable over" Sus in view of Ayers, the latter reference disclosing the treatment of non-image areas of a printing plate with a water-soluble silicate to enhance the hydrophilic properties of said areas, the same purpose for which appellant employs a silicate.

The Board affirmed the Examiner's rejection "for the reasons stated" by him.

Appellant does not challenge the Examiner's finding that the conventional developer powders employed by Sus to form the image areas of his printing plate are in fact alkali-resistant. Rather, appellant argues here that there is absolutely nothing in Sus to suggest the use of any alkaline liquid in a process for preparing a printing plate, or to suggest that the resins employed by Sus in his photoconductive insulating layer are in fact alkali-soluble. Appellant urges:

> * * * The Examiner has alleged that at least some of the resins disclosed in the Sus et al. patent are soluble in alkali but this rejection obviously is based on facts within the personal knowledge of an employee of the office in view of the absence of any disclosure supporting it in the patent. Accordingly, an affidavit under Rule 107 in support of the Examiner's position has been requested but the affidavit has not been supplied.

We do not think that the Sus disclosure is as limited as appellant attempts to make it in arguing that Sus discloses only the use of ethyl alcohol or acetic acid for removing the non-imaged portions of the photoconductive insulating layer. Sus discloses the use of *solvents* for that purpose, with ethyl alcohol and acetic acid but exemplary. It seems to us one of ordinary skill in the art would be aware of the fact that many of the resins disclosed by Sus (and also by appellant here) are indeed alkali-soluble and that alkali solutions could be used as solvents to remove the non-imaged portions of Sus' photoconductive insulating layer.[4] **[1]** A disclosure in a reference is not limited to its specific illustrative examples, but must be considered as a whole to ascertain what would be realistically suggested thereby to one of ordinary skill in the art. See *In re Chapman*, 53 CCPA 978, 357 F.2d 418, 148 USPQ 711.

[2] Nor do we find any error in the Examiner's and Board's refusal to supply appellant with an affidavit under Patent Office Rule 107.[5]

---

[4] The use of alkaline liquids to dissolve or remove alkali-soluble portions of printing plate coatings, which may or may not include alkali-soluble resins, can hardly be said to be a concept foreign to the printing plate art in general—see, for example, the description of preparation of printing plates by photographic techniques in *In re Sus*, 49 CCPA 1301, 1307, 306 F.2d 494, 498, 134 USPQ 301, 305; *In re Schmidt*, 48 CCPA 1140, 293 F.2d 274, 130 USPQ 404.

[5] That rule reads in pertinent part: * * * When a rejection is based on facts within the personal knowledge of an employee of the Office, the data shall be as specific as possible, and the reference must be supported, when called for by the applicant, by the affidavit of such employee, and such affidavit shall be subject to contradication or explanation by the affidavits of the applicant and other persons.

Upon being asked for such an affidavit in the proceedings below, the Examiner replied:

> Applicant's attorney, in the brief, again requests an affidavit under Rule 107, although it has repeatedly been pointed out to him during the prosecution of this case that the rejection of the claims is based upon conclusions drawn from the evidence in the record and is *not* based on facts within the personal knowledge of any employee in the Patent Office.

The Examiner also supported his views with citations from the Wakeman, Mellan and Schildknecht references, pointing out that those evidentiary materials collectively establish that such resins as alkyd and colophony resins are known to be soluble in various alkalies. Under the circumstances, it seems apparent that the knowledge relied on by the Examiner is nothing peculiarly within the personal knowledge of a Patent Office employee as appellant alleges, but is a matter of common knowledge in the art.

[3] While we appreciate appellant's arguments, we are satisfied that no reversible error appears in the decision appealed from, and it is affirmed.

AFFIRMED.

U.S. Court of Customs and Patent Appeals

IN RE ERNST JOHAN JENS HENRIKSEN

No. 8107. Decided July 3, 1968

[55 CCPA—; — F.2d —; — USPQ —]

1. APPLICATION—BENEFIT OF FILING DATE OF EARLIER APPLICATION—35 U.S.C. 120.
"The sole issue presented by this appeal is the interpretation of 35 U.S.C. 120. Simply stated, the question is whether the language of section 120 *limits* an applicant to the benefit of the filing date of the second preceding application in a chain of co-pending applications. We reverse the decision of the Patent Office Board of Appeals, 154 USPQ 53 (Pat. Off. Bd. App. 1966). We hold here that under that section of the statute, in view of its long-standing interpretation by the Patent Office and the patent bar, there is no statutory basis for fixing an arbitrary limit to the *number* of prior applications through which a chain of copendency may be traced to obtain the benefit of the filing date of the earliest of a chain of copending applications, provided applicant meets all the other conditions of the statute."

2. SAME—SAME—SAME.
"35 U.S.C. 120 does not by its express terms unequivocally prohibit obtaining the benefit of an earlier filing date in the United States by reason of the numerical lineage of the application whose filing date is relied on."

3. SAME—SAME—WORDS AND PHRASES—CONSTRUCTION OF "ON AN APPLICATION"—SINGULAR EXPRESSIONS INCLUDE THE PLURAL—1 U.S.C. 1 and 35 U.S.C. 120.
"It should be borne in mind in reading the phrase 'on an application' [in 35 U.S.C. 120], which is in the singular, that this codification of Title 35 of the United States Code, like other recently codified titles, was written with 1 U.S.C. 1 in mind which provides for the construction of such singular expressions to include the plural. So read, 'an application' does not necessarily refer only to a single application."

4. SAME—SAME—PRIOR PRACTICE.
" * * * the Patent Office herein has acted in a manner inconsistent with at least one prior decision of the Board [*Ex parte Harris*] which, in our view, evidences the practice prior to January 1, 1953 wherein an applicant was not limited to a chain of three copending applications for the purpose of claiming an early effective filing date."

5. SAME—SAME—RELIANCE ON TWO OR MORE SUCCESSIVELY PRECEDING APPLICATIONS.
"The decisions of the Supreme Court do not prescribe a result contrary to ours. From as early as *Godfrey* v. *Eames*, 68 U.S. 317 (1863), to *Crown Cork &*

Seal Co. v. *Gutmann Co.*, 304 U.S. 159 (1938) and *General Talking Pictures Corp.* v. *Western Electric Co.*, 304 U.S. 175 (1938), the Supreme Court has not seemed to question the right of the later-filed application to rely on an earlier-filed application, nor has it questioned—although the point does not seem to have arisen—the right to rely on more than two successively preceding applications."

6. SAME—SAME—SAME—35 U.S.C. 120.
"We agree with appellant's analysis [of 35 U.S.C. 120] to the effect that the statute provides no limit to the number of applications that may be copending."

7. SAME—SAME—35 U.S.C. 120.
"The action of the Board [in its construction of 35 U.S.C. 120 to limit the chain of copending applications] is akin to a retroactive rule change which may have the effect of *divesting* applicants of valuable rights to which, but for the change in Patent Office position brought about by the Board's decision, they were entitled. Nothing appears in the Patent Office Rules of Practice or the Manual of Patent Examining Procedure which sanctions such a result."

APPEAL from the Patent Office. Serial No. 384,716.

REVERSED.

Bacon & Thomas (*Leo A. Rosetta*, of counsel) for appellant.

Joseph Schimmel for the Commissioner of Patents.

John E. Hanrahan (*Armand Cifelli, Evans Kahn, Joseph Levinson, William P. Spielman*, of counsel) amicus curiae.

Anthony P. DeLio, Donald Brown, DeLio and Montgomery, amicus curiae.

Jacobs & Jacobs, amicus curiae.

Before WORLEY, *Chief Judge*, and RICH, SMITH, ALMOND, and KIRKPATRICK, *Associate Judges* [1]

SMITH, *J.*, delivered the opinion of the court.

[1] The sole issue presented by this appeal is the interpretation of 35 U.S.C. 120. Simply stated, the question is whether the language of section 120 *limits* an applicant to the benefit of the filing date of the second preceding application in a chain of copending applications. We reverse the decision of the Patent Office Board of Appeals,[2] 154 USPQ 53 (Pat. Off. Bd. App. 1966).[3] We hold here that under that section of the statute, in view of its long-standing interpretation by the Patent Office and the patent bar, there is no statutory basis for fixing an arbitrary limit to the *number* of prior applications through which a chain of copendency may be traced to obtain the benefit of the filing date of the earliest of a chain of copending applications, provided applicant meets all the other conditions of the statute.

The issue arises in an appeal from the decision of the Board affirming the Examiner's rejection of all of the claims in appellant's application [4] as fully met under 35 U.S.C. 102(b) by appellant's *own* prior-issued patent.[5] The Examiner had stated that the appellant "is statutorily barred from obtaining a patent on the instant claims under 35 U.S.C. 102(b)" [6] because the subject matter here appealed is completely disclosed in the patent and because appellant can claim only the benefit of the filing date of an application twice-removed in time from appellant's application, relying on what seems to us to be an unwarranted and wholly novel interpretation of that statute.

[1] Senior District Judge, Eastern District of Pennsylvania, sitting by designation.

[2] Because of the nature of the legal issues raised before the Board, the appeal was heard and considered by an augmented panel of the Board of Appeals consisting of Messrs. Federico, Friedman, Kreek, Dracopoulos, Keely Brewrink, Magil, Rosa and Mangan, Examiners-in-Chief. Mr. Federico wrote the opinion of the Board. Mr. Magil, with whom Messrs. Dracopoulos and Mangan joined, dissented on the issue here before the court.

[3] Noted in 36 Geo. Wash. L. Rev. 468 (1967) and 17 Cath. U. L. Rev. 355 (1968).

[4] Claims 1 through 16 of Serial No. 384,716, filed July 23, 1964. No claims have been allowed. For the position of this application in the chain, see p. 19, infra.

[5] U.S. Patent No. 2,678,634, issued May 18, 1954. See the chart on p. 19, infra.

[6] A person shall be entitled to a patent unless—

* * * * * * *

(b) the invention was patented or described in a printed publication in this or a foreign country or in public use or on sale in this country, more than one year prior to *the date of the application* for patent in the United States * * * . [Emphasis added.]

The subject matter of the appealed claims

The appealed claims relate to ball point pens, and, in particular, to the nature of the "follower plug" at the surface of the ink column of such pens. The claims set forth the nature of the composition of the follower plug in several ways, and also contain various details of the pen construction. Before the Board, appellant apparently conceded that the constructional details in the claims are not material to this issue and maintains that position here, stating that the "subject matter of the claims standing finally rejected is of no moment in the present appeal." Thus, no further description of the subject matter or the claims is necessary.

Background

The issue, as stated by the Board, is the effective date to which the claims of the present application can be entitled as a matter of law. 154 USPQ at 54. Before the Board, the appealed application was urged to be entitled to the date of the application filed October 26, 1946, on which the Henriksen patent issued. The Examiner contended that appellant could only be entitled to an effective filing date of February 12, 1959, from which he concluded that the claims here appealed were barred under 35 U.S.C. 102(b).

The filing sequence of the chain of applications

The appealed application is the last in the following series of continuation-in-part applications:

A. 705,927. Filed October 26, 1946, issued May 18, 1954, as U.S. Patent No. 2,678,634. This patent forms the basis for the statutory bar under the decision of the Board.

B. 421,934. Filed April 8, 1954. The application was stated to be a continuation-in-part of application A and was abandoned April 29, 1958.

C. 551,363. Filed December 6, 1955. The application was stated to be a continuation-in-part of application B, and also referred to application A. It was abandoned February 26, 1959.

D. 658,280. Filed May 10, 1957. The application was stated to be a continuation-in-part of application B and also referred to application A. It was abandoned May 20, 1960.

E. 792,824. Filed February 12, 1959. The application was stated to be a continuation-in-part of application C and referred to both applications A and B. It was abandoned June 6, 1962.

F. 199,829. Filed June 4, 1962. The application was stated to be a continuation-in-part of application E and referred to applications A, B, and C. It was abandoned October 26, 1964.

G. 384,716. Filed July 23, 1964. The application is stated to be a continuation-in-part of application F and refers to each of the other applications in the chain. This is the application on appeal.

The Board observed, and the appellant here agrees, that while seven applications are included in the above list, only a chain or sequence of six applications is involved. It can be seen that applications B, C, and D were copending at the same time and that applications C, D, and E were also copending at the same time. Thus, either application C or D may be omitted while still preserving a continuous chain of copendency of the common subject matter from application G to application A.

The rejection

While the Examiner, in his answer, promulgated several grounds of rejection, he limited the issues on appeal to the Board to two, i.e., the interpretation of section 120, and "double patenting." The decision of the Board refused to sustain the second, i.e., whether the appealed claims raised an issue of "non-patentable distinction" (double patenting) over the claims of appellant's patent, reversing the Examiner in this regard.

The majority of the Board affirmed the Examiner with respect to the issue under section 120. They stated, 154 USPQ at 55:

> The issue as presented by the Examiner is that a series of cases, retaining the filing date of the first in the sequence in a situation of this kind can be no longer than three applications. In other words, an application may be entitled to the filing date of a parent case or a grandparent case, but not any great grandparent or great, great, etc. grandparent case. There are only two alternatives involved in view of the statutory reference to a series of three applications; either an applicant is limited to a maximum of three cases in a series or there is no limit whatsoever to the number of applications which could be filed in sequence, retaining the benefit of the filing date of the first application in the series for the last one. As has been stated, the Examiner has presented an analysis of the language of section 120.
>
> We have carefully studied the language of section 120 and agree with the position of the Examiner.

The Board discussed in detail the reasons why it believed that a literal reading of section 120 led to the conclusion that the law permitted claiming only the benefit of a sequence of two or three applications and no more. We shall refer to those reasons as this opinion develops.

The statute

35 U.S.C. 120 is here reproduced, in clauses denoted by letters for ease of understanding. In so doing, we caution that the statute must be read as a whole rather than as a series of discrete phrases. That section provides:

A. An application for patent for an invention disclosed in the manner provided by the first paragraph of section 112 of this title in an application previously filed in the United States by the same inventor shall have the same effect, as to such invention, as though filed on the date of the prior application.

B. *if* filed before the patenting or abandonment of or termination of proceedings on the first application

C. *or* on an application similarly entitled to the benefit of the filing date of the first application

D. *and* if it contains or is amended to contain a specific reference to the earlier filed application. [Emphasis added.]

Clause D has been satisfied since the appealed application (G) specifically refers to applications F, E, C, B and A.[7] See *Hovlid* v. *Asari*, 305 F.2d 747, 134 USPQ 162 (9th Cir. 1962). There is no question of the applicability of clause A. It is clear that, irrespective of the filing date to which appellant may be entitled, no issue is raised as to

[7] The application states:

> This application is a continuation of my copending application Serial No. 199,829, filed June 4, 1962 [F], which was a continuation-in-part of my copending application Serial No. 792,824, filed February 12, 1959 [E], which was a continuation-in-part of Serial No. 551,363, filed December 6, 1955 [C], which in turn is a continuation-in-part of Serial No. 421,934, filed April 8, 1954 [B], the latter being a continuation-in-part of Serial No. 705,927, filed October 26, 1946 (now Patent No. 2,678,634) [A]. [The bracketed letters refer to the chart, p. 19, supra.]

the compliance of any "application previously filed" with the provisions of the first paragraph of section 112.[8]

Opinion

[2] 35 U.S.C. 120 does not by its express terms unequivocally prohibit obtaining the benefit of an earlier filing date in the United States by reason of the numerical lineage of the application whose filing date is relied on. Therefore, in order to determine whether such a limitation implicitly exists, it is necessary to resort to various interpretive aids. The foremost illuminant on the meaning which Congress intended for the statute is the written legislative history of the Act. Although that legislative history is somewhat inconclusive in this instance, we set it out in detail for what help it provides.

Legislative history of 35 U.S.C. 120

The Patent Act of 1952 was given great impetus by the publication on January 10, 1950[9] of a Committee Print entitled "Proposed Revision and Amendment of the Patent Laws," characterized as a "Preliminary Draft with Notes" printed for the use of the Committee on the Judiciary of the House of Representatives. The draft was intended to serve "as the basis for the expression of opinions."[10]

Section 35 of that draft related to the same topic as section 120 of the present statute.[11] While the Board opinion characterized the language of that section as merely referring to two applications, and "as written would only seem to permit reliance on a single prior copending application for an earlier date," 154 USPQ at 59 n. 3, we disagree that any numerical limitation is implied. What is stated, as we read the draft is the requirement of copendency between "an application" and "an application previously filed" or "the prior application." This is found in the requirement that "the later application must be filed before "the prior application" is patented or abandoned or proceedings thereon terminated. Nothing in this language restricts the number of applications in a chain so long as the applications are copending.

The preliminary draft was considered by various committees. Thereafter, the first bill, H.R. 9133, 81st Cong., 2d Sess. (1950), was introduced by Representative Bryson on July 17, 1950. Section 119

[8] 35 U.S.C. 112, first paragraph, provides:

> The specification shall contain a written description of the invention, and of the manner and process of making and using it, in such full, clear, concise, and exact terms as to enable any person skilled in the art to which it pertains, or with which is most nearly connected, to make and use the same, and shall set forth the best mode contemplated by the inventor of carrying out his invention.

Mr. Federico was also of the view that a new ground of rejection should have been made based on lack of sufficient disclosure in the first application to support any of the appealed claims.

[9] For further background on the genesis of the Act, see Rich, Congressional Intent—Or, Who Wrote the Patent Act of 1952? Patent Procurement and Exploitation (BNA–1963), p. 61; see also Harris, Some Aspects of the Underlying Legislative Intent of the Patent Act of 1952, 23 Geo. Wash. L. Rev. 658 (1955).

[10] Foreward to that draft at page III.

[11] § 35. Date of continuing application

An application for patent for an invention disclosed in the manner required by section 28 [now §112] of this title in an application previously filed in the United States by the same inventor shall have the same effect as though filed on the date of the prior application, if the later application is filed before the prior application is patented or abandoned, or proceedings thereon terminated, and if the applicant claims the benefit of the filing date of the prior application in said later application. The term of the patent granted on said later application shall not extend beyond the date of expiration of the patent if any, which may be granted on the earlier application.

of that bill[12] is the predecessor of section 120 of the current act and seems to require, with respect to copendency, *only* that the disclosure of the later application be continuously pending in the Patent Office since the date of the prior application. No restriction on the number of applications which may be so involved is stated.

The next bill, H.R. 3760, 82d Cong., 1st Sess. (1951), a revision of H.R. 9133, was introduced April 18, 1951. Section 120 of H.R. 3760[13] is very similar to present section 120. In this version, the reference to continuous pendency of the subject matter has been omitted and reference is made to the patenting, abandonment of or termination of proceedings on the first application or *any* application *similarly* entitled to the benefit of the filing date of the first application. Hearings were held on this bill.[14]

The Committee next reported an amended bill, H.R. 7794, 82d Cong., 2d Sess. (1952), which became enacted as the 1952 Patent Act. As noted by the Board, 154 USPQ at 59 n. 3, two changes were made in section 120: (1) "*any*" was changed to "*an*" in referring to applications similarly entitled to the benefit of the filing date of the first application, and (2) "on" was inserted.

The Committee Report, H.R. Rep. No. 1923, 82d Cong., 2d Sess. (1952), "Report from the Committee on the Judiciary, House of Representatives, to accompany H.R. 7794," contains the statement, at page 7:[15]

> Sections 120 and 121 express in the statute certain matters which exist in the law today but which had not before been written into the statute, and in so doing makes some minor changes in the concepts involved.

The Revision Notes, however, are more terse, id. at page 20:

> *Section 120—new section*
>
> This section represents present law not expressed in the statute except for the added requirement that the first application must be specifically mentioned in the second.

In the Senate Report, S. Rep. No. 1979, 82d Cong., 2d Sess. 6, (1952) the same language was used as was used in House Report No. 1923 in referring to the bill for both the report portion and for the reviser's notes.

---

[12] § 119. Benefit of earlier filing date in the United States

An application for patent for an invention disclosed in the manner provided by section 112 of this title in an application previously filed in the United States by the same inventor shall have the same effect as to such invention, as though filed on the date of the prior application, if, and to the extent that, the disclosure of the later application has been continuously pending in the Patent Office since the date of the prior application and if the later application contains a specific reference to the earlier filed application.

[13] § 120. Benefit of earlier filing date in the United States

An application for patent for an invention disclosed in the manner provided by the first paragraph of section 112 of this title in an application previously filed in the United States by the same inventor shall have the same effect, as to such invention, as though filed on the date of the prior application, if filed before the patenting or abandonment of or termination of proceedings on the first application *or any* application similarly entitled to the benefit of the filing date of the first application and if it contains or is amended to contain a specific reference to the earlier filed application. [Emphasis added.]

[14] The statement of Mr. P. J. Federico, speaking as a drafter of the bill with the consent of the Commissioner of Patents on section 120 of H.R. 3760 was:

> Sections 120 and 121 express in the statute certain things which exist in the law today that have not been written into the statute, and in so doing make some changes in the concepts involved.

See "Hearings before Subcommittee No. 3 of the Committee on the Judiciary, House of Representatives, Eighty-Second Congress, First Session on H.R. 3760," 82d Cong., 1st Sess., ser. 9 at 39 (1951).

The Report of the Laws and Rules Committee of the American Patent Law Association on H.R. 3760 stated, id. at 45:

> Section 120 codifies the present practice relative to the right to the filing date of an earlier application for common subject matter in a continuation application.

[15] This virtual copy of Mr. Federico's testimony would seem to indicate that, despite the change in wording in this draft, no change in the operation of the Statute as previously formulated was intended. It may thus be validly concluded, it would seem, that the change from "any'" to "on an" was not legally significant with respect to the legislative intent as bearing on the fact situation of this appeal.

[3] It should be borne in mind in reading the phrase "on an application," which is in the singular, that this codification of Title 35 of the United States Code, like other recently codified titles, was written with 1 U.S.C. 1 in mind which provides for the construction of such singular expressions to include the plural.[16] So read, "an application" does not necessarily refer only to a single application.

From the foregoing, it is clear from the express words of the committee reports and from the reviser's notes that the practice prior to the 1952 Act is pertinent. We thus turn to whatever authorities may exist which may bear upon that issue.

Practice relating to obtaining the benefit of an earlier filing date prior to 1953

Appellant argued before the Board that the law before the 1952 Patent Act was that there was no limit in a chain-of-applications situation with respect to the last one obtaining the benefit of the filing date of the first in the series and that the 1952 Patent Act intended no change in the law in this respect. At the hearing before the Board, appellant stated that diligent efforts had been made to find cases dealing with the present problem but that none had been found. 154 USPQ at 56. The Board invited appellant to submit any additional material which might be found, and a supplemental memorandum was filed, Ibid.

The Board distinguished the cases cited by appellant purportedly to show that sequences of more than three applications had been involved in litigation.[17] Appellant advances no such case authority here, other than *Ex parte Harris*, 55 USPQ 329 (Pat. Off. Bd. App. 1942). In that case Harris filed an application as the last application of a chain of four successively copending cases and referred to each of the prior applications. The Examiner rejected Harris' claims on prior art having an effective date subsequent to the filing date of the first application of the Harris series but prior to the filing date of later cases of that series. Harris contended that he was entitled to the filing date of the first case of the series of four, which would render the prior art ineffective against him, and that he could present claims to disclosed subject matter at any time. The Examiner, however, finally rejected Harris' claims, referring to the matter of delay in presenting claims, and the case was appealed to the Patent Office Board of Appeals. In rendering its decision, the Board ruled that the subject matter involved in at least some of Harris' claims on appeal was disclosed in the first application of the series, id. at 331, and, with reference to Harris' contention that he was entitled to the filing date of his first case the Board stated, ibid: It is believed that applicant's position is correct and this ground of rejection will not be affirmed.

[4] Thus, the Patent Office herein has acted in a manner inconsistent with at least one prior decision of the Board which, in our view, evidences the practice prior to January 1, 1953 wherein an ap-

---

[16] 1 U.S.C. 1 provides: * * * In determining the meaning of any Act or resolution of Congress, words importing the singular number may extend and be applied to several persons or things; words importing the plural number may include the singular * * *

[17] Appellant cited *Indiana General Corp. v. Lockheed Aircraft Corp.* 249 F. Supp 809, 148 USPQ 312 (S.D. Cal. 1966); *Merck & Co. v. Olin Mathieson Chem. Corp.*, 253 F.2d 156, 116 USPQ 484 (4th Cir. 1958); and *Otto v. Koppers Co.*, 246 F.2d 789, 114 USPQ 188 (4th Cir. 1957). The Board pointed out that in the first two cases, only a chain of three applications is involved in tracing the common subject matter while in the last case there is no chain longer than two. 154 USPQ at 56.

plicant was not limited to a chain of three copending applications for the purpose of claiming an early effective filing date.

The Solicitor admits that the decision in the *Harris* case permitted an applicant to rely upon a chain of four applications, and further admits that decision is inconsistent with the decision on appeal. He points out that the decision of the Board here indicates that no decision was known where it was held that there was no limit to the number of successive applications. Apart from the fact that the Board of Appeals in the *Harris* case was not faced with the problem of construing specific statutory language, since there was none, the Solicitor also argues that a single instance in which a chain of more than three applications was recognized is not sufficient to prove that a chain of more than three applications was the law prior to that date. We cannot agree with that position when all of the factors involved in reaching our decision are considered.

The Board dismissed the statements of certain authors with the observations that they give no actual authority for their "inferences of unlimitedness." 154 USPQ at 57. The Board expressed "no doubt that some persons may have believed that there was no limit," Ibid. The references there referred to were: 1 Rivise and Caesar, Interference Law and Practice 510; McCrady, Patent Office Practice 68 (4th ed. 1958); 2 Robinson, The Law of Patents 204 (1890); and Glascock and Stringham, Patent Law: Substantive Aspects 108–116 (1943). The dissenting opinion of 3 members of the augmented Board, with which we generally agree, completely disagreed with the denigration of those persons who believed that there was no limit to the sequence of consecutive applications. The Board's dissent quoted *Robinson*, op. cit. supra, and 1 Rogers, The Law of Patents 21 (1914).[18] We think that these references at the very least provide additional support for the interpretation here contended for by appellant.

The absence of case law to the contrary prior to 1953 is still another factor to be considered in concluding that the decision of the Board was erroneous. Insofar as we can determine from our independent research, and from the fruits of the research of the parties and the able briefs of amici, the case law contains no limitations on the transmission of the effective date of a first filing through a chain of copending applications.

[5] The decisions of the Supreme Court do not prescribe a result contrary to ours. From as early as *Godfrey* v. *Eames*, 68 U.S. 317 (1863), to *Crown Cork & Seal Co.* v. *Gutmann Co.*, 304 U.S. 159 (1938) and *General Talking Pictures Corp.* v. *Western Electric Co.*, 304 U.S. 175 (1938), the Supreme Court has not seemed to question the right of the later-filed application to rely on an earlier-filed application, nor has it questioned—although the point does not seem to have arisen—the right to rely on more than two successively preceding applications.

No case has been cited to us, decided since the 1952 Act was passed, which leads to the result reached here by the majority of the Board.

[18] 2 Robinson, The Law of Patents 204 (1890) states:

It is immaterial how many of these substituted applications may be filed or for how long a period such efforts to obtain a patent may be continued. The patent, when granted, wil rest on the original application, as represented in its various successors, unaffected by the intermediate conduct of third parties or the current of events, unless some legislative act, embracing it in its provisions, has been passed.

1 Rogers, The Law of Patents 21 (1914) provides:

* * * and that no number of successive applications indicates an intention to abandon; but that, in reference to the question of abandonment, all such may be regarded as one application, the ones subsequent to the first being known as "continuing" applications.

Turning to the merits of the positions of the parties, the Board states, with respect to clause (B) of the statute, supra, that this clause specifies a condition of copendency relating to only two applications. Appellant refers to the Examiner's analysis of section 120 and his conclusion that there must be copendency with the current application, so far as clause (B) is concerned, and states that no disagreement exists on that point. Thus, the real question is the proper interpretation of the third clause (C).

According to the decision of the Board, the third clause (C) is written in the form of an alternative to the second clause (B), the requirement for copendency, and the decision states that, because of the use of the word "similarly" with the word "or," the previous condition of *two applications* being copending obtains. 154 USPQ at 56. The Board's analysis of these clauses is that the section first states that *two applications* must be copending, and then, as an alternative thereto, that there may be *an* intermediate application between the first and the last. Thus, read literally[19] the Board agreed with the Examiner that section 120 necessarily leads to a sequence of only two or three applications, and no more.

Appellant argues that a proper interpretation of section 120 grants to an applicant the benefit of the filing date of any earlier filed application, if the latest application were copending with one entitled to the filing date of that earlier case by virtue of other considerations than direct copendency. To be "similarly" entitled to an earlier date, an application must be for the same invention, must be by the same inventor, and must be filed in the United States, all as set forth in clause (A) of the statute. Appellant submits that the word "similarly," as appearing in section 120, refers to the prerequisites of clause (A). Appellant also submits that an application is "similarly" entitled to the filing date of the earliest case if it meets all the conditions of clause (A) and the subject matter was continuously pending, even though more than one bridging case is present. Thus the third application is entitled to the benefit of the filing date of the first application and the fifth application is "similarly" entitled thereto.

Looking again at clause (A), the statute provides that an application shall have the same effect as though filed on "the date" of a prior application. The statute does not limit the benefits of the Act to the *actual* filing date of that prior copending application but refers broadly to "the date" of the prior application, which appellant submits means the *effective* date of the prior application.

For example, in a chain of applications like that presently involved, even the Examiner's interpretation of section 120 unquestionably gives to application C the date of application A as the effective date of application C, that is, October 26, 1946. Appellant submits that "the date" of the prior application, when later considering application C as the "prior" application referred to in clause (A), is its *effective* date, or October 26, 1946. Thus, "the date" of application C (October 26, 1946) is the date to be considered in any further application of section 120 to the chain of applications listed hereinabove. Then, in considering applications C, D, and E, even the Examiner's interpretation of the section would award to application E the "date" of application C, which has already been shown to be October 26, 1946, which

[19] As Judge Learned Hand said in *Peter Pan Fabrics* v. *Martin Weiner Corp.*, 274 F.2d 487, 124 USPQ 154 (2d Cir. 1960): " * * * it is a commonplace that a literal interpretation of the words of a statute is not always a safe guide to its meaning." * * *

is in fact the date on which application A was filed in the Patent Office. By similar reasoning, it appears clear that the language of section 120 can be given a literal construction which will permit application G to claim as its effective filing date the date of October 26, 1946.

[6] We agree with appellant's analysis to the effect that the statute provides no limit to the number of applications that may be copending.

It is worthy of note that the Board has not overtly mentioned the relationship of 35 U.S.C. 120 to the remainder of the Patent Act. 35 U.S.C. 120 is contained in Chapter 11 of Title 35, entitled "Application for Patent." By its title, section 120 deals with the "Benefit of earlier filing date in the United States." Chapter 10 of the same Act, entitled "Patentability of Inventions," sets forth certain requirements for patentability. 35 U.S.C. §§ 102 and 103 prescribe the conditions for patentability dealing respectively with novelty and the loss of the *right* to patent and with nonobvious subject matter. By the terms of section 102, the application here on the facts of this case is "entitled to a patent unless," under 102(b), the invention was patented in this country more than one year prior to "the date of the application for patent in the United States." By its adjudication concerning what earlier date appellant may gain, the Board has circumscribed a meaning of long standing attributed to 102(b). Moreover, the Board has also failed to mention what effect it intends its holding to have on interference practice.

[7] The action of the Board is akin to a *retroactive* rule change which may have the effect of *divesting* applicants of valuable rights to which, but for the change in Patent Office position brought about by the Board's decision, they were entitled. Nothing appears in the Patent Office Rules of Practice or the Manual of Patent Examining Procedure which sanctions such a result.

Finally, we would express the postscript to this opinion, as did the dissenting opinion of the Board, that it is unfortunate that a patent should be granted on an application depending upon another application filed over 20 years ago. However, as the opinion of the Board dissenters states, 154 USPQ at 61:

> * * * but the cure for this deplorable state of affairs rests with Congress, not with us. If a restriction is to be imposed, it must be based upon law, legislatively or judicially expressed.

It is our view, as the judiciary, that it is for the Congress to decide, with the usual opportunity for public hearing and debate, whether such a restriction as sought by the Board is to be imposed.

The decision of the Board is reversed.

REVERSED.

WORLEY, *Chief Judge*, concurs in the result.

PATENT SUITS

Notices under 35 U.S.C. 290; Patent Act of 1952

2,401,373, Robinson and Beach, TANNING OF LEATHER; **2,935,473**, King and Adolphson, DRILLING FLUID COMPOSITION AND PROCESS, **filed** Oct. 10, 1960, D.C., W.D. Wash. (Seattle), Doc. 5148, *Rayonier Incorporated* v. *Puget Sound Pulp & Timber Company*. Judgment dismissing complaint and finding for the defendant on counterclaim. Injunction to issue, Oct. 20, 1967.

2,462,625, I. Florman, SHAVING MACHINES, **filed** Nov. 10, 1964, D.C., S.D.N.Y., Doc. 64–C–3414, *Irving Florman* v. *North American Philips Company, Inc. et ano.* Dismissed without prejudice for want of prosecution, Mar. 19, 1968.

2,690,518, Fyler and Rowe, COLOR PICTURE TUBE, **filed** Mar. 8, 1968, D.C., S.D.N.Y., Doc. 68–C–990, *Zenith Radio Corporation* v. *Columbia Broadcasting System, Inc.*

2,729,719, C. G. Kronmiller, CONTROL DEVICE; **2,746,472**, M. G. Sogge, SAFETY VALVE; **2,786,924**, C. G. Kronmiller, THERMOSTATS, **filed** Aug. 18, 1967, D.C., N.D. Calif. (San Francisco), Doc. 47693, *Dura-Bond Bearing Company* v. *Honeywell, Inc.* Consent decree dismissing complaint and counterclaim, with prejudice, Mar. 20, 1968.

2,746,472. (See 2,729,719.)

2,786,924. (See 2,729,719.)

2,895,501, D. W. Irwin, PRESSURE REGULATOR CONSTRUCTION; **3,032,054**, same, **filed** Mar. 21, 1968, D.C., N.D. Tex. (Dallas), Doc. CA3–2518, *Fisher Governor Company* v. *Universal Controls Corporation.*

2,921,786, Deichmann and Becker, CLOTH SPREADING MACHINE; **3,067,996**, E. Theodosiou, FOLD RETAINING DEVICE FOR CLOTH LAYING MACHINES; **3,112,107**, same, HIGH SPEED CLOTH LAYING MACHINE; **3,203,638**, same, **filed** Jan. 22, 1968, D.C., S.D.N.Y., Doc. 68–C–278, *Cutting Room Appliances Corporation* v. *Sam Zuckerman Sewing Machine Corporation.*

2,935,473. (See 2,401,373.)

3,028,576, J. C. Gerard, METHODS AND APPARATUS FOR MAKING THIN PLASTIC GLOVES; **3,153,481**, R. Orsini, PLASTIC ARTICLES, **filed** Jan. 24, 1967, D.C., N.D. Ill. (Chicago), Doc. 67c123, *Ethicon, Inc.* v. *Thomas Hamil Reidy.* Court's order cause dismissed without prejudice. Mar. 18, 1968.

3,032,054. (See 2,895,501.)

3,059,823, J. H. Batts, COAT HANGER; **3,306,506**, same, GARMENT HANGER CONSTRUCTION, **filed** Mar. 22, 1968, D.C., E.D.N.Y. (Brooklyn), Doc. 68C–279, *John Thomas Batts* v. *Mr. Hanger, Inc.*

3,067,996. (See 2,921,786.)

3,112,107. (See 2,921,786.)

3,120,848, G. R. Seperack, BRASSIERE, **filed** Jan. 20, 1965, D.C., S.D.N.Y., Doc. 65–C–190, *The Warner Brothers Company* v. *Munsingwear, Inc. et ano.* Order of dismissal with prejudice, Mar. 22, 1968.

3,153,481. (See 3,028,576.)

3,197,835. (See 3,154,145.)

3,203,638. (See 2,921,786.)

3,217,648, Foote, Rickey and Whipple, COMBINATION WAD COLUMN AND SHOT LINER, **filed** Mar. 25, 1968, D.C. Minn. (Minneapolis), Doc. 2–68–C88, *Remington Arms Company, Inc.* v. *Herter's Inc.*

3,265,290, A. J. Cali, AXIAL FLOW COMPRESSORS FOR JET ENGINES, **filed** Mar. 26, 1968, D.C., E.D.N.Y. (Brooklyn), Doc. 68C–293, *Anthony J. Cali* v. *Eastern Air Lines, Inc.*

3,267,587, Niemiec and Satterlee, HAIR DRYER, **filed** Mar. 25, 1968, D.C., E.D. Wis. (Milwaukee), Doc. 68–C–84, *Rayette-Faberge, Inc.* v. *John Oster Manufacturing Co.* **Same, filed** Mar. 22, 1968, D.C., E.D.N.Y. (Brooklyn), Doc. 68C–283, *Rayette-Faberge, Inc.* v. *Roto Broil Corp. of America et ano.*

3,303,943, Lambert, Black and Chafin, APPARATUS FOR TRANSFERRING ARTICLES FROM ONE LOCATION TO ANOTHER LOCATION, **filed** Mar. 21, 1968, D.C., N.D. Ala. (Birmingham), Doc. CA–68–153, *H. K. Porter Company, Incorporated* v. *Koppers Company, Incorporated.*

3,306,506. (See 3,059,823.)

3,315,272, Olt and Stapenhill, DUAL VISOR HELMET, **filed** Feb. 9, 1968, D.C. Ct. Cl., District of Columbia (Washington), Doc. 52–68, *Sierra Engineering Co.* v. *The United States.*

3,361,114, H. R. Axelrod, METHOD FOR FEEDING FISH AND OTHER AQUATIC ANIMALS; **3,361,566**, same, FREEZE DRIED FOOD ARTICLE FOR AQUATIC ANIMALS, **filed** Feb. 9, 1968, D.C., N.D. Calif. (San Francisco), Doc. 48674, *TFH Publication, Inc.* v. *Sternco Industries, Inc.* Stipulation and order dismissing case with prejudice, Mar. 21, 1968.

3,361,566. (See 3,361,114.)

3,372,493, L. Birch, ANTIQUED PAINTING ON WOOD AND BY-THE-NUMBER SYSTEM OF MAKING THE SAME, **filed** Mar. 12, 1968, D.C., S.D.N.Y., Doc. 68–C–1048, *Avalon Manufacturing Corp.* v. *Friends Industries, Inc.* **Same, filed** Mar. 12, 1968, D.C., E.D.N.Y. (Brooklyn), Doc. 68C–236, *Avalon Mfg. Corp.* v. *Lisbeth Whiting Co., Inc.*

D. 210,015, R. D. Kahn, INSECT ELECTROCUTING TRAP, **filed** Mar. 14, 1968, D.C. Mass. (Boston), Doc. 68–238–J, *Fedtro, Inc.* v. *Chadwick-Miller, Inc. et al.*

Erratum

In the OFFICIAL GAZETTE of Jan. 30, 1968, under Patent Suits, column 2, paragraph beginning "3,154,145," should read as follows:

3,154,145, C. D. Brown, METHODS OF AND APPARATUS FOR RUNNING MULTIPLE PIPE STRINGS AND WELL PACKERS IN WELL BORES; **3,197,835**, same, POWER-OPERATED ELEVATOR DEVICES FOR WELL-PIPE, **filed** Oct. 3, 1967, D.C., S.D. Tex. (Corpus Christi), Doc. 67C–124, *Brown Oil Tools, Inc.* v. *J. M. Young, doing business as Imperial Tool Co., and D. W. Hamilton, doing business as Doss Hamilton Inc.* Consent judgment, plaintiff owner. Each defendant enjoined and restrained from infringing, contributing to the infringement of, or inducing the infringement of either of said Letters Patent Nos. 3,154,145 and 3,197,835, except pursuant to license thereunder, Dec. 29, 1967.

REISSUES

AUGUST 6, 1968

Matter enclosed in heavy brackets [ ] appears in the original patent but forms no part of this reissue specification; matter printed in italics indicates additions made by reissue.

26,429
INFORMATION RETRIEVAL SYSTEM AND METHOD

Samuel Kaufman and Joseph J. Magnino, Jr., Yorktown Heights, N.Y., assignors to International Business Machines Corporation, Armonk, N.Y., a corporation of New York

Original No. 3,350,695, dated Oct. 31, 1967, Ser. No. 416,719, Dec. 8, 1964. Application for reissue Jan. 15, 1968, Ser. No. 702,138

31 Claims. (Cl. 340—172.5)

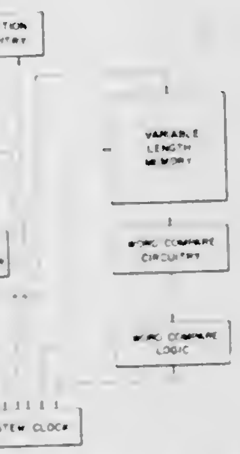

An information retrieval system is disclosed wherein the information is initially input to the system in normal English language text form and questions are posed to the system in the same normal text form where appropriate. The data base or body of information to be searched is organized in essentially two separate formats in system memory, i.e., an alphabetized portion wherein the alphabetization is accomplished according to word length and secondly an unalphabetized portion wherein the individual words of the data base are accessible in their normal order. Means are provided for searching for individual words in the data base and also word strings which comprise two or more words in their normal sequential order. Allowable questioning techniques include means for searching the data base with groups of question words wherein conventional and, or, not, etc. logic possibilities exist.

26,430
AIR CONDITIONING SYSTEM

Charles F. Beeler, % Automated Environment, Inc., Box 896, Hamilton, Ohio 45012

Original No. 3,247,894, dated Apr. 26, 1966, Ser. No. 372,165, June 3, 1964. Application for reissue Apr. 13, 1967, Ser. No. 637,022

13 Claims. (Cl. 165—16)

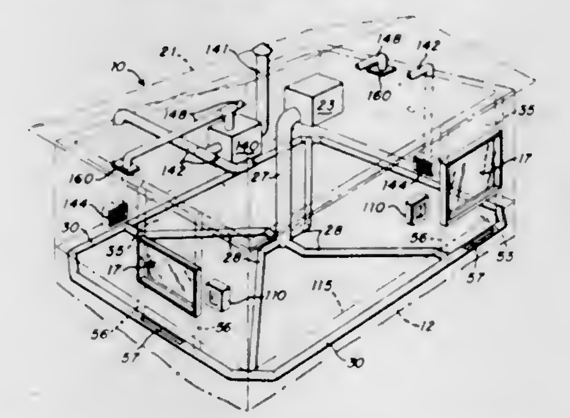

An air conditioning system for a building wherein a separate perimeter system is provided to compensate for flow of heat into the building from the exterior. The windows include blinds which are automatically raised or lowered depending on whether sunlight is passing through the windows or not. An interior system is also provided to automatically regulate the temperature humidity and ventilation of the interior of the building. .

26,431
ELECTRO-PNEUMATIC PROCESS CONTROLLER

Kenneth G. Kreuter, Goshen, Ind., assignor to Robertshaw Controls Company, Richmond, Va., a corporation of Delaware

Original No. 3,216,331, dated Nov. 9, 1965, Ser. No. 282,936, May 24, 1963. Application for reissue Dec. 9, 1966, Ser. No. 607,347

11 Claims. (Cl. 91—374)

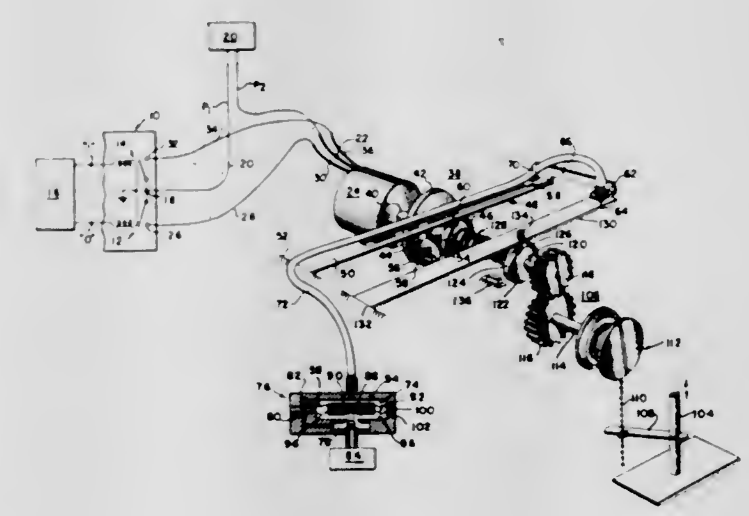

1. A process control means for controlling process parameters comprising input means for sensing a variation in a process parameter and producing a duration-modulated multiple state electric signal in response thereto, electro-pneumatic converter means for producing a pneumatic pressure change having a predetermined functional relationship with said electric signal, said pressure change comprising an increase or decrease of pneumatic pressure determined, respectively, by the state of said electric signal, said increase or decrease having a [manitude] *magnitude* proportional to the duration of said signal in a respective state thereof, displaceable controller means actuated by said pneumatic pressure from a first position through a displacement having a direction determined by the state of said electric signal and a magnitude determined by the duration of said signal in a respective state thereof, and feed back means interconnecting said controller means and said converter means, said feedback means acting on said converter means to continuously modulate said converter means in response to the displacement of said controller means until the effect of said pressure change on said controller means is equalized, whereby said controller means will stop in a second [potion] position.

26,432
EMERGENCY BRAKE ACTUATOR
Frank T. Cox, Jr., Ashtabula, Ohio, Howard A. Sherretts, Linesville, Pa., and George P. Mathews, Cloverdale, Calif., assignors, by mesne assignments, to American Standard Inc., a corporation of Delaware
Original No. 3,295,423, dated Jan. 3, 1967, Ser. No. 491,455, Sept. 29, 1965, which is a division of Ser. No. 275,375, Apr. 24, 1963, now Patent No. 3,232,175, dated Feb. 1, 1966. Application for reissue June 8, 1967, Ser. No. 651,636
3 Claims. (Cl. 92—63)

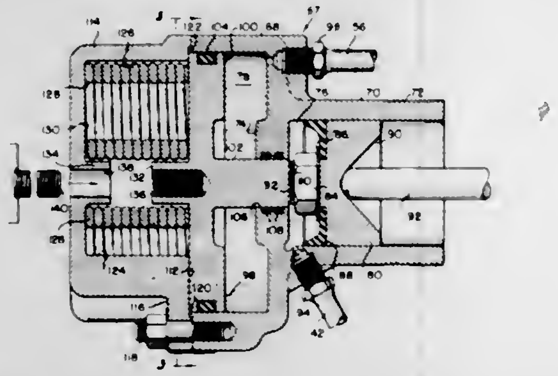

A brake actuator comprises a casing having aligned service and emergency chambers extending oppositely from a common internal wall, a first piston in the service chamber connected to brake mechanism, a second piston in the emergency chamber, the second piston having a part extending through the wall to engage the first piston, a cover detachably secured to the casing at the outer end of said emergency chamber, compression springs mounted in a plurality of separate pockets in the cover circumferentially spaced around the axis of said actuator and cooperating aligned spring guide formations on said second piston and the cover.

26,433
AMIDE AND IMIDE DERIVATIVES OF METAL SALTS OF SUBSTITUTED SUCCINIC ACIDS
William M. Le Suer, Cleveland, Ohio, assignor to The Lubrizol Corporation, Wickliffe, Ohio, a corporation of Ohio
No Drawing. Original No. 3,163,603, dated Dec. 29, 1964, Ser. No. 329,860, Dec. 11, 1963. Application for reissue Oct. 27, 1967, Ser. No. 689,732
12 Claims. (Cl. 252—33.6)

Oil-soluble metal salts of substituted succinic acid acylated aliphatic polyamines and processes for their preparation. These are exemplified by the alkali, alkaline earth, lead, cadmium, zinc, nickel and cobalt salts of polyisobutenyl-substituted succinic acid acylated alkylene polyamines. The salts are additives for lubricating compositions.

26,434
FLUID CONTROL SYSTEMS FOR FOILS
Romald E. Bowles, 12712 Meadowood Drive, Silver Spring, Md. 20904
Original No. 3,209,714, dated Oct. 5, 1965, Ser. No. 316,000, Oct. 14, 1963. Application for reissue Feb. 14, 1967, Ser. No. 628,511
32 Claims. (Cl. 114—66.5)

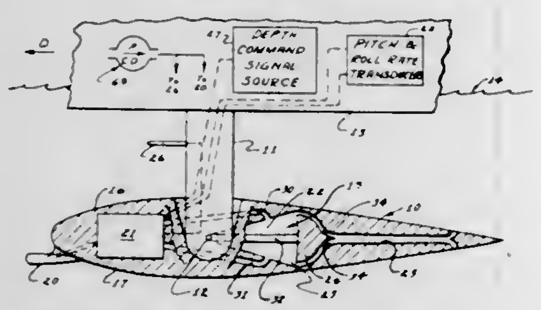

Various parameters of the position or orientation of a foil in its environment are sensed on control flow of fluid out of ports on the top and bottom and toward the rear of the foil to control lift forces on long adjacent surfaces of the foil to re-establish a desired position. Parameters sensed may be lift, depth, and angular rotation about one of the axes of the foil. Pure fluid amplifiers are employed which are responsive to fluid signals indicating deviation from a desired norm to control fluid flow to the ports.

26,435
APPARATUS FOR ASSEMBLING SWITCHES
Nicholas F. Gubitose, Clarks Green, and Jack J. Monahan, Allentown, Pa., assignors to Western Electric Company, Incorporated, New York, N.Y., a corporation of New York
Original No. 3,273,989, dated Sept. 20, 1966, Ser. No. 332,101, Dec. 20, 1963. Application for reissue Sept. 21, 1967, Ser. No. 669,991
13 Claims. (Cl. 65—154)

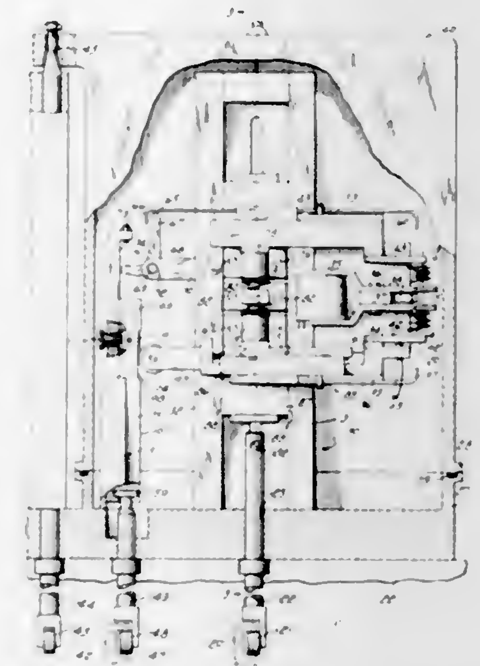

1. In an apparatus for assembling a switch having a pair of contacts extending within a glass sleeve, an assembly unit which comprises:
a housing with an open top,
a carriage frame mounted in the housing and extending upwardly through the open top,
a stationary chuck mounted at a given position on the frame for receiving a glass sleeve,
upper and lower gripping jaws for receiving upper and lower contacts for the switch,
upper and lower carriages for the upper and lower gripping jaws disposed respectively above and below the stationary chuck and supported for simultaneous opposing movement relative to each other by the carriage frame,
means cooperatively associated with the lower carriage [to support] *for supporting* the lower gripping jaws for lateral movement,
heating [coils supported by the carriage frame and disposed respectively above and below the chuck and in substantial axial alignment therewith to receive] *means positioned to heat* the ends of the glass sleeve [and cause] *for* sealing [of] the *upper and lower* ends of the sleeve *to their respective contacts* at given intervals,
means disposed at the feeding station [to feed] *for feeding* upper and lower contacts to the upper and lower jaws and a glass sleeve into [the heating coils and] the chuck,

means for simultaneously advancing the carriages to locate the upper and lower jaws in a position to receive their respective upper and lower contacts and to retract the carriages to locate the jaws in a position such that they are in substantial alignment with the stationary chuck,
means for moving the carriages simultaneously for causing the upper and lower jaws to move in opposing relationship towards the chuck for locating the inner ends of their respective contacts in the glass sleeve,
means for moving the lower carriage laterally to cause the lower jaws to move the lower contact out of alignment with the upper contact and thereby position the inner ends of the contacts in overlapping relationship,
a hood,
means [to open] *for opening* the hood prior to the unit entering a feeding station [for receiving] *to receive* the contacts and glass sleeve, *and*
means [to close] *for closing* the hood after the unit leaves the feeding station, the hood closing the open top of the housing and cooperating with the housing, when closed, to completely enclose the frame [and structure] therein[.*.*]
[means to move the carriages relative to each other for positioning the jaws to receive their contacts and to return the carriages to positions toward the chuck to locate the inner ends of the contacts in overlapping positions in the glass sleeve, and]
[means operable to move the lower carriage laterally to cause the lower jaws to move the lower contact out of alignment with the upper contact as they are moved into an overlapping position.]

26,436
CRYOGENIC MEMORY SYSTEM WITH INTERNAL INFORMATION EXCHANGE
Munro K. Haynes, Chappaqua, N.Y., assignor to International Business Machines Corporation, New York, N.Y., a corporation of New York
Original No. 3,170,144, dated Feb. 16, 1965, Ser. No. 29,899, May 18, 1960. Application for reissue May 27, 1965, Ser. No. 460,618
16 Claims. (Cl. 340—173.1)

A memory device which includes rows of registers, each register having a plurality of storage positions formed from superconductive persistent current loops, corresponding storage positions in the registers forming columns in an array configuration. Cryotron elements are employed to control the information currents in the system, the presence or absence of currents in storage position loops providing indications of stored binary data. Information in one register may be interchanged with information in another register without requiring a data transfer to a device external to the memory. The invention is adaptably implemented by numerous types of bistable storage de-

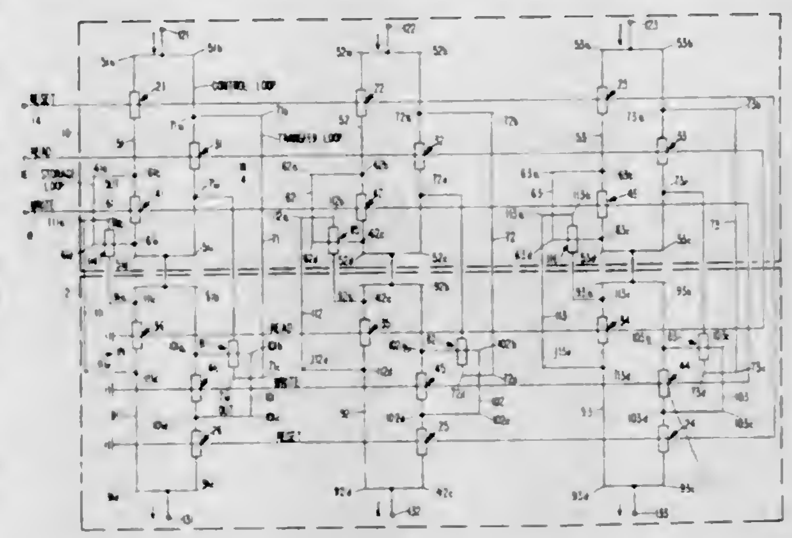

vices, cryotrons and other cryogenic components being particularly advantageously employed.

26,437
MASS SPECTROMETER ASSEMBLIES
Edward Willdig, Stretford, England, assignor to Associated Electrical Industries Limited, London, England, a British company
Original No. 3,187,180, dated June 1, 1965, Ser. No. 222,841, Sept. 11, 1962. Application for reissue May 16, 1967, Ser. No. 646,746
6 Claims. (Cl. 250—41.9)

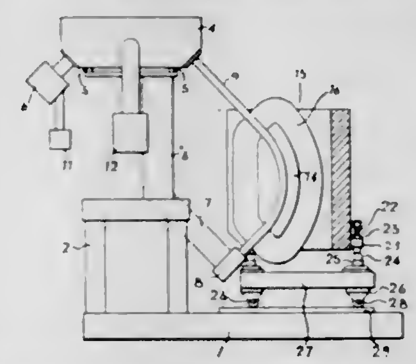

A mass spectrometer assembly comprises an ion source, a collector, and conduit means extending from the ion source to the collector, all supported by a rigid support frame, and a magnetic analyzer support independently of the frame. The support for the magnetic analyzer comprises a mechanism having at least three points of support for the magnet and adjustable at each of the points to vary the angular position of the magnet. The support mechanism is in turn supported on a movable trolley so the magnetic analyzer may be moved toward and away from the spectrometer conduit means.

PLANT PATENTS

GRANTED AUGUST 6, 1968

Illustrations for plant patents are usually in color and therefore it is not practicable to reproduce the drawing.

2,825
NECTARINE TREE
Chris Floyd Zaiger, 537 Rosemore Ave., Modesto, Calif. 95351
Filed Sept. 21, 1966, Ser. No. 581,426
1 Claim. (Cl. Plt.—41)

1. A new and distinct variety of nectarine tree, as illustrated, and described, characterized by medium to large size and heavy production; its bearing of firm, yellow fleshed, intensely red nectarines and which ripen approximately fourteen days earlier than the Grand River nectarine (United States Plant Patent No. 1,248) and the Merrill Sunrise nectarine (United States Plant Patent No. 1,256).

2,826
APRICOT TREE
Chris Floyd Zaiger, 537 Rosemore Ave., Modesto, Calif. 95351
Filed Sept. 21, 1966, Ser. No. 581,427
1 Claim. (Cl. Plt.—39)

1. A new and distinct variety of apricot tree, substantially as herein shown and described, characterized particularly as to novelty by its medium to large fruit, the relatively high red skin color on the side of the fruit exposed to the sun, its shorter maturation period than "Perfection" apricot, and its earlier ripening habit ranging from three to four weeks ahead of "Perfection" apricot in Modesto, Calif.

2,827
ROSE PLANT
Febo Giuseppe Cazzaniga, Vimodrone, Milan, Italy, assignor to Fratelli Scarpellini S.p.A., Bergamo, Italy, a company of Italy
Filed Feb. 8, 1967, Ser. No. 614,755
Claims priority, application Italy, Feb. 8, 1966, 14,264
1 Claim. (Cl. Plt.—20)

1. A new and distinct variety of rose plant of the hybrid tea class, substantially as herein shown and described, characterized particularly as to novelty by the unique combination of a vigorous and upright habit of plant growth, free blooming habits, suitability for both outdoor and greenhouse culture, elongated oval buds, solitary flowers of traditional form on rigid stems, a distinctive, attractive and uniform color of the flowers, with the inside of the petals of vermilion color and the outside of the petals of scarlet color, the overall shade corresponding to the color vermilion, the flower having a delicate apricot fragrance, good resistance to fungus diseases such as black-spot, mildew and rust, and very long lasting qualities as cut flowers.

PATENTS

GRANTED AUGUST 6, 1968

GENERAL AND MECHANICAL

3,395,406
DOUBLE-LENS GOGGLES
Robert P. Smith, Englewood, Colo. (R.R. 2, Box 87, Evergreen, Colo. 80439)
Filed Apr. 15, 1966, Ser. No. 542,877
6 Claims. (Cl. 2—14)

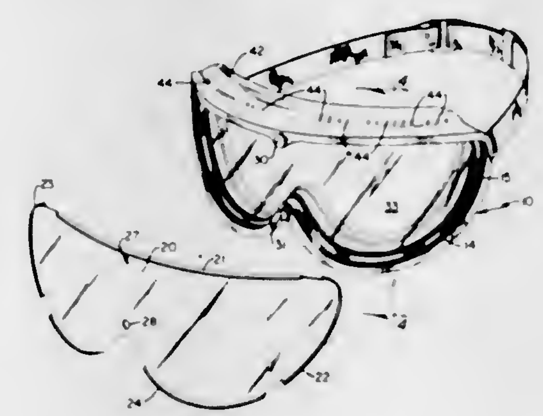

Double-lens sports goggles vent the space between the lens by a venturi action to prevent fogging of the lens. A normal flange depending from the peripheral edge of the front lens maintains the lens secured in position in the frame. The inner lens is arranged for a prescription insert lens providing clear vision for the user as well as wide angle vision.

3,395,407
SWIMMING POOL
Allen R. Teschner, 102 Lovering St., Medway, Mass. 02053
Filed May 14, 1965, Ser. No. 455,878
13 Claims. (Cl. 4—172)

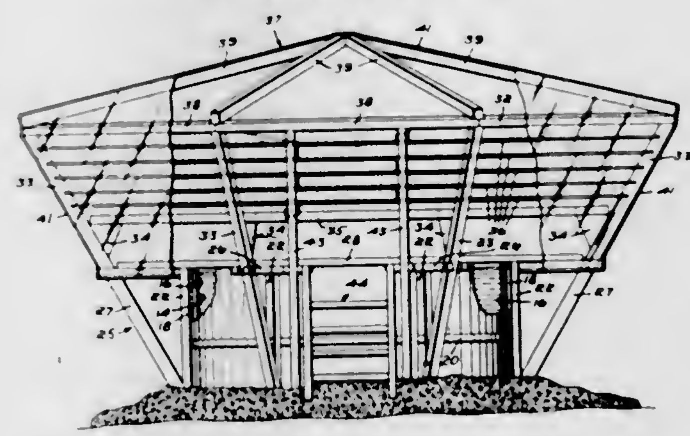

A bathing pool structure having a flexible waterproof liner supported within a curved cylindrical side wall formed by edge joined elongated plywood panels. The joined panels have relatively large lengths which facilitates their formation into a support structure having a desirable closed plane curve shaped in horizontal cross section.

3,395,408
TOILET BOWL GUARD
Gregory E. Weber, 7837 Sepulveda Blvd., Van Nuys, Calif. 91405, and David P. McConnell, Van Nuys, Calif.; said McConnell assignor to said Weber
Filed Apr. 12, 1965, Ser. No. 447,147
10 Claims. (Cl. 4—253)

A device for preventing children from opening toilet covers comprising suction cups fastened to the underside of the toilet seat and toilet lid for making suction cup seals between the seat and toilet bowl and between the

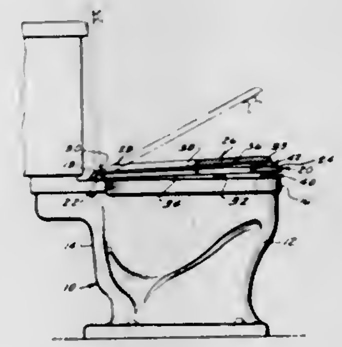

lid and seat. The suction cup on the underside of the lid is smaller than the suction cup on the underside of the seat so that when an adult lifts the cover the seat remains down until it is separately lifted.

3,395,409
FOLDING SOFA BED STRUCTURE
Paul W. Eakins, St. Louis, Mo., assignor to Foster Bros. Manufacturing Co., St. Louis, Mo., a corporation of Delaware
Filed Nov. 18, 1966, Ser. No. 595,520
10 Claims. (Cl. 5—13)

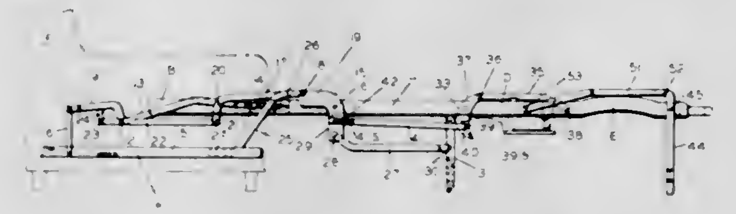

A latch for automatically locking a headrest section of a bed in an inclined position upon movement of the headrest section from the horizontal to the inclined position and automatically releasable to permit return of the headrest section to horizontal position by elevation of the same to an advanced position. The latch comprises an elongated notched plate pivoted at one end to the main pivot pin of the headrest section, and aligned with the headrest section. A support link pivoted to the main bed section remote from the main pivot pin has a projecting pin slidable along a longitudinal surface of the latch plate, which is spring-biased against the support link pin, and the latter surface is notched to receive the support link pin when the head section reaches its normal inclined position and thereby holds the headrest section in its inclined position. A dog is pivoted to the latch plate adjacent the notch and is arranged so that the support link pin will override it when the headrest section is moved to an advanced position, but upon return from the advanced to the normal inclined position, the support link pin will engage the dog and rotate it to close the notch and permit the support link pin to pass over the notch to return to its original position and thus permit return of the headrest section to its horizontal position.

3,395,410
WATER SKI
James W. Rutland, Cypress Gardens, and Reed R. Clary III, Miami, Fla., assignors to Cypress Gardens Skis, Inc., Cypress Gardens, Fla.
Filed July 25, 1966, Ser. No. 567,592
6 Claims. (Cl. 9—310)

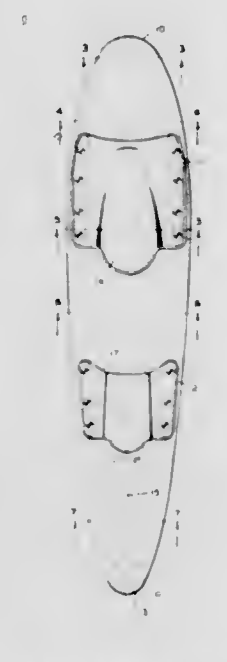

A water ski or trick board is approximately 24 to 32 inches long and has releasable binders for both of the skier's feet, one behind the other, the body of the ski being relatively wide at its forward portion and tapering toward the rear.

3,395,411
TRACKING SKI
Richard D. Pope, Jr., and Sanford L. Faught, Winter Haven, Fla., assignors to Cypress Gardens Skis, Inc., Cypress Gardens, Fla.
Filed Nov. 10, 1966, Ser. No. 593,474
6 Claims. (Cl. 9—310)

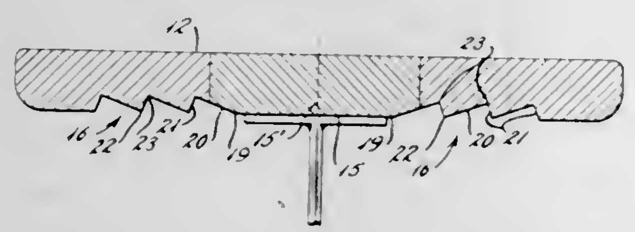

A ski having a plurality of longitudinally disposed grooves on its running surface, the grooves being spaced from the longitudinal center of the ski and having relatively wide planing surfaces and relatively narrow reaction surfaces disposed approximately at right angles to each other, the reaction surfaces preventing side slipping during use of the ski.

3,395,412
WASHING APPARATUS
Louis A. Derwin, 4508 Cross St., Downers Grove, Ill. 60515
Filed Sept. 12, 1966, Ser. No. 578,662
7 Claims. (Cl. 15—3)

1. An article cleaning apparatus comprising a deformable projectile element, means for coating said projectile element with a cleaning medium, and means for casting said projectile element against the article to be cleaned with a force sufficient to cause said element to deform against the object and slide along the same with a wiping action, and a turntable having a perforated floor for supporting the article to be washed, a sump beneath said turntable for collecting fluid and the cleaning elements thrown against the article, said elements adapted to drop

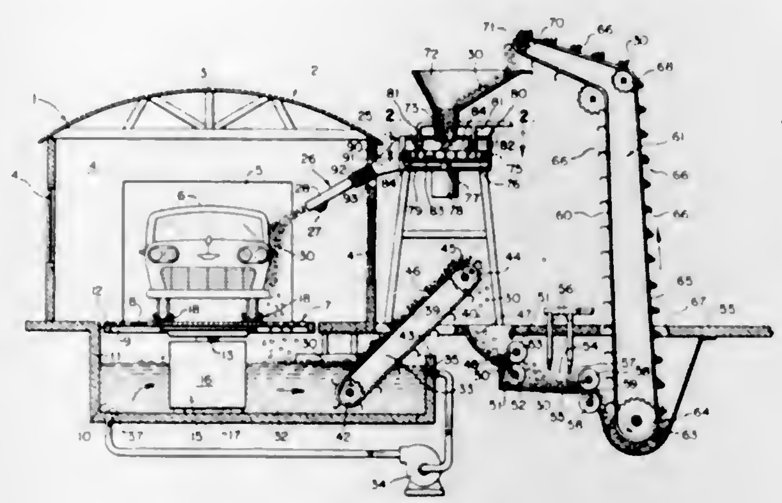

through the perforated floor, means for collecting the cleaning elements from said sump and returning the same to said casting means and including means for wringing said elements and cleaning the same while in transit to said casting means.

3,395,413
ERASER CLEANER
Gerald J. Dalton, 459 North 250 East, Kaysville, Utah 84037
Filed May 17, 1967, Ser. No. 639,110
13 Claims. (Cl. 15—4)

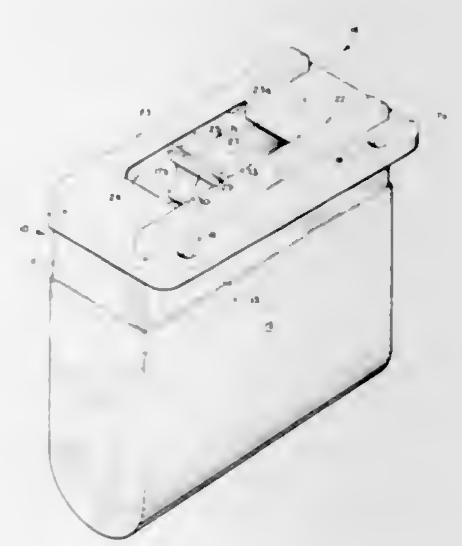

A cleaner for chalkboard erasers, including a housing having an open bottom, a slideway for chalkboard erasers on the top of the housing and a scrubber-beater suspended in the housing and adapted to swing against the bottom of the eraser as it is moved back and forth in the slideway.

3,395,414
PORTABLE SCRAPER DEVICE
Charles G. Malin, 22725 Cedar Point Road, Cleveland, Ohio 44142
Filed June 15, 1966, Ser. No. 557,709
9 Claims. (Cl. 15—93)

A portable scraper mechanism for attachment to a portable tool such as an electric motor-driven drill, for scraping operations and comprising an elongated housing having a spring-loaded reciprocal plunger slidably mounted therein, with a scraper blade attached to the exterior end of the plunger and a cam attached to the inner end of the plunger. A rotatable cam is provided in confronting relation to the first-mentioned cam and, upon rotation thereof, coacts with the first-mentioned cam to cause

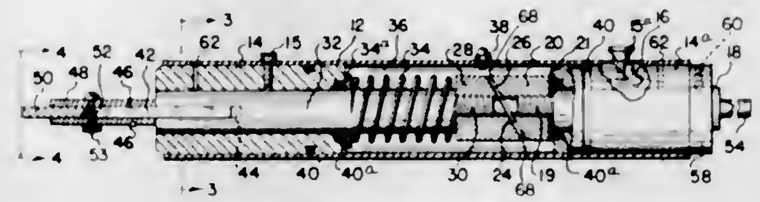

reciprocal movement of the plunger. A diagonally extending slot and holding nut arrangement is provided for selectively varying the spacing between the cams and thus varying the amount of reciprocation of the plunger. A motor speed control can be used with the electrical drill to selectively vary the speed of reciprocation of the scraper element.

3,395,415
CLEANING DEVICES HAVING INTERCHANGEABLE HEADS
Ragnvald G. Leland, 2334 W. 241st St., Lomita, Calif. 90717
Continuation-in-part of application Ser. No. 522,192, Jan. 21, 1966. This application Sept. 20, 1966, Ser. No. 580,701
13 Claims. (Cl. 15—121)

A mop-like device having interchangeable heads, an applicator element mounted on the head and a handle pivoted to the head, said head including a head plate, said handle having a lateral arm extending along the head plate, the head plate having a journal tube in which said arm is removably engaged, the head plate having an upstanding button-like detent adjacent one end of the journal tube, the lateral arm of the handle having a rounded cam knob and an annular groove behind said knob engaged with the upstanding button detent, an edge of the head plate and an edge of the applicator element being formed with registered transverse slots extending toward the entering end of the journal tube and through which the handle can move when the lateral arm is turned in the journal. The head plate can be made in various forms, one including a squeegee plate, and the applicator element may also be formed in various configurations to receive the head plate.

3,395,416
MOP WITH REVERSIBLE DISPOSABLE PAD
Martin Robert Hughes, Grand Rapids, Mich., assignor to Bissell Inc., Grand Rapids, Mich., a corporation of Michigan
Filed Oct. 3, 1966, Ser. No. 583,772
2 Claims. (Cl. 15—228)

A mop having a handle and head, with pivoting being permitted therebetween by an integral hinge of relatively thin material. A pad is secured to the head by a myriad of cooperative loops and hooks therebetween. The pad is

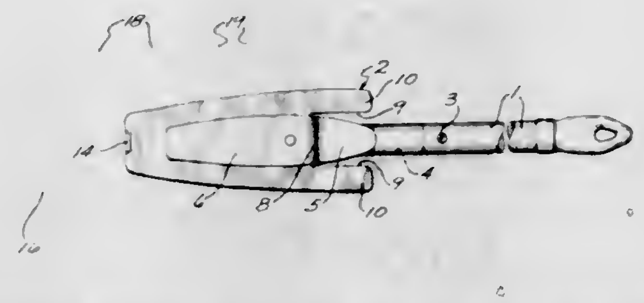

relatively flat and of fibrous material, with tapering longitudinal side edges which are scalloped.

3,395,417
BACKUP PAD ASSEMBLY
Nicholas Matouka, Royal Oak, Mich., assignor to Formax Manufacturing Corporation, Detroit, Mich., a corporation of Michigan
Filed Apr. 5, 1966, Ser. No. 540,372
2 Claims. (Cl. 15—230)

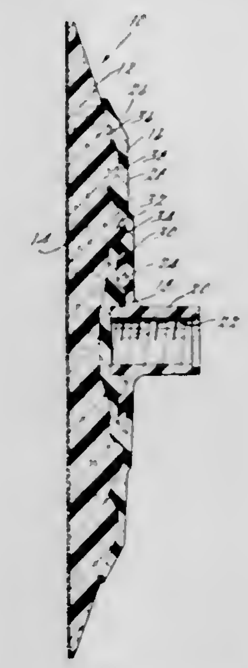

A backup pad construction with a soft flexible pad member secured to a flexible backup plate and with a rigid insert member connected to the backup plate. The inner face of the backup plate has spaced annularly extending grooves providing zones of flexibility.

3,395,418
WAX APPLICATOR AND REFILLS
John R. Malmo, Memphis, Tenn., assignor to Gem, Incorporated, Byhalia, Miss., a corporation of Mississippi
Filed May 17, 1967, Ser. No. 639,072
2 Claims. (Cl. 15—231)

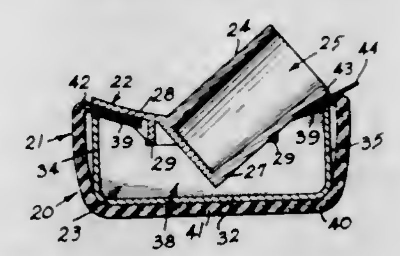

A wax applicator and wax applicator refills for applying wax and the like to floors or other surfaces wherein there is provided a disposable pad that has convenient finger-engaging tabs for facilitating the removal and replacement of used pads or refills.

3,395,419
WIPER BLADE ASSEMBLY
Erwin J. Nunlist, Penfield, and John S. Eyster, Fairport, N.Y., assignors to Ritter Pfaudler Corporation, Rochester, N.Y., a corporation of New York
Filed July 21, 1966, Ser. No. 566,934
6 Claims. (Cl. 15—246.5)

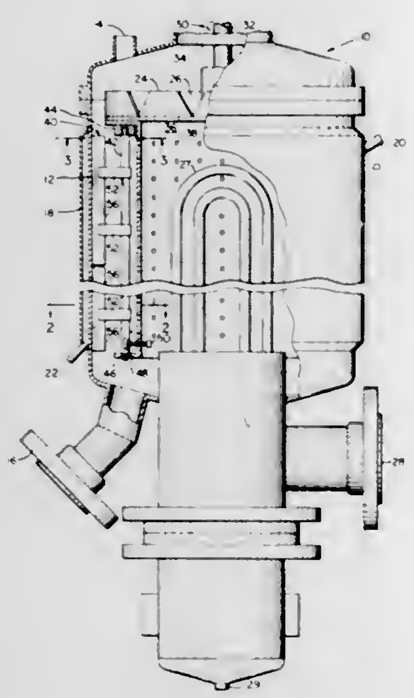

A wiper blade assembly for wiped film evaporators and the like has the wiper blades attached to the ends of cantilevered leaf springs extending tangentially from a torsion bar carried by the rotor of the evaporator substantially parallel to the axis of rotation, one end of the torsion bar being rotatable with respect to the other end wherein rotation of the rotatable end will vary the pressure of the wiper blade against the wiped surface along the length of the wiper blade.

3,395,420
TWO-PIECE CARPET GRIPPER AND BINDER
Harvey J. Hill, Monterey Park, and Earle F. Prater, Long Beach, Calif., assignors to Roberts Consolidated Industries, Inc., City of Industry, Calif., a corporation of California
Filed Mar. 21, 1966, Ser. No. 535,754
2 Claims. (Cl. 16—16)

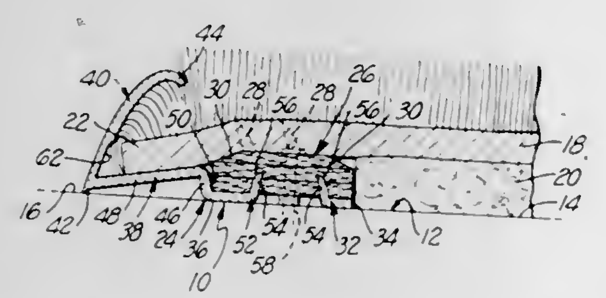

A two-piece carpet gripper and binder for securing and covering a carpet edge. One of the pieces is metal and includes a floor-engaging base, a connecting strip integral with one edge of the base, and a carpet clamping flange integral with and overlying the connecting strip. The other piece comprises a wooden carpet gripper strip seated on the base and carrying carpet gripping prongs. The gripper strip is secured to the base by integral prongs on the base penetrating upwardly into the gripper strip. The base is scalloped so that portions of the gripper strip overlying it may be adhered directly to the floor.

3,395,421
LOBSTER AND CRAB CLAW SHELL CRACKING TOOL
Charles L. Harless, Jr., Box 928, San Angelo, Tex. 76901
Filed Dec. 7, 1965, Ser. No. 512,185
2 Claims. (Cl. 17—7)

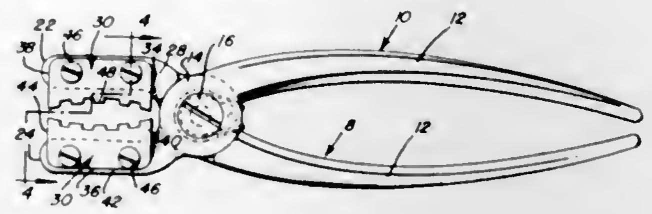

The pliers-type hand-tool disclosed embodies pivoted lever units having spring-opened handles and jaws. Unique jaws serve to grippingly clench and crack lobster and crab claws. Corresponding side surfaces of the jaws are recessed to define three thrust distributing shoulders; namely, a pair of spaced parallel transverse shoulders and a longitudinal shoulder therebetween. The blade lodged in the recess has three marginal edges abutting the respective stabilizing shoulders. The longitudinal marginal edge portion is flush with the surface of the coacting longitudinal shoulder.

3,395,422
DOOR TOE GUIDE
Frank Stuart Harwood, Richmond Hill, Ontario, and Carl T. Prucha, Toronto, Ontario, Canada, assignors, by mesne assignments, to Dover Corporation, New York, N.Y.
Filed Apr. 20, 1966, Ser. No. 543,905
3 Claims. (Cl. 16—93)

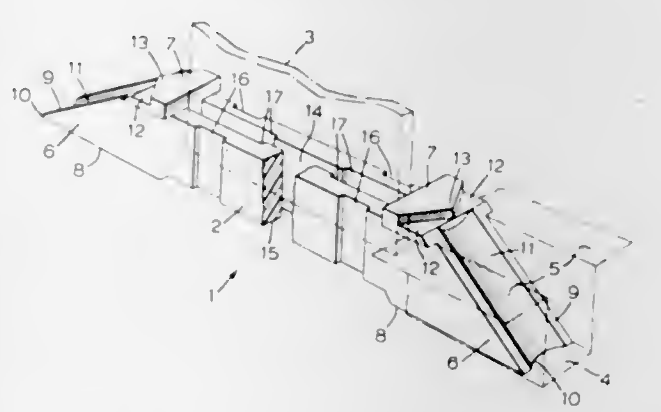

A toe guide for a horizontally sliding door having end cleaning portions and a central slotted portion which receives a guide bracket attached to the bottom of the door. The end portions are wedged shaped, and have flat bottom surfaces which slide on a guide groove located under the door.

3,395,423
PIVOT MOUNTING FOR MULTIPLE DOORS OF SWINGING DOOR CABINET
Johannes Antonius Bus, Rothrist, Aargau, Switzerland, assignor to Bus-Wand AG, Glarus, Switzerland
Filed June 15, 1966, Ser. No. 557,779
Claims priority, application Switzerland, June 16, 1965, 8,441/65
3 Claims. (Cl. 16—135)

A pivoting pin and strap fastening device for mounting a swinging door onto an edge of a panel comprising a U pin-strap fastener having two forks projecting from a common base on the front side, each of the two forks having a countersunk boring, a pin mounted in and projecting rearwardly from the common base, the pin being adapted

to be inserted into the countersunk boring and thereby be parallel to the sides of the forks so that the pin can be secured to an edge of a vertical wall or panel to constitute

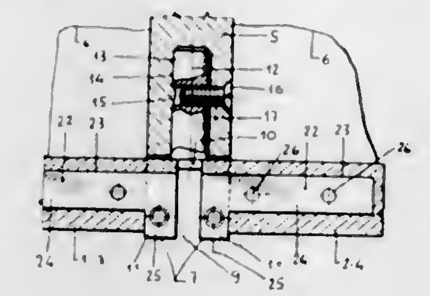

a single pivot point for mounting a plurality of doors to the sides of the projecting forks, and a plurality of plates to secure the pin and U-shaped fastener to the corner of each of the mounted doors.

ERRATUM

For Class 17—7 see:
Patent No. 3,395,421

3,395,424
METHOD AND APPARATUS FOR MOULDING
Robert Nouel, Villejuif, Seine, France, assignor to Inventions Finance Corporation, a corporation of France
Continuation-in-part of applications Ser. No. 273,145, Apr. 15, 1963, now Patent No. 3,372,433, and Ser. No. 289,173, June 18, 1963, now Patent No. 3,241,192. This application June 1, 1966, Ser. No. 554,374
1 Claim. (Cl. 18—30)

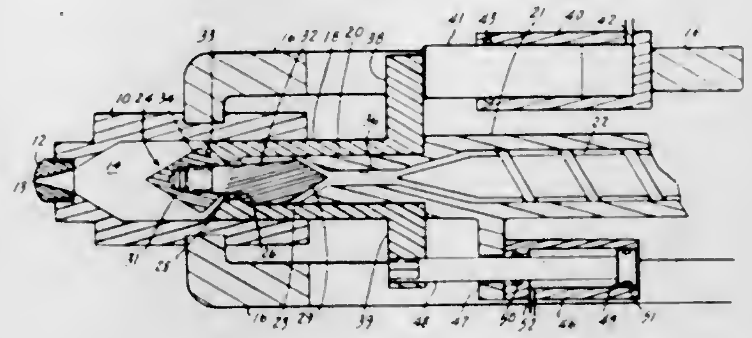

1. An apparatus for injection molding comprising a feed means including a conveyor and a relatively movable collar surrounding the conveyor, said collar having an outlet of reduced diameter, a variable volume transfer chamber defined by the outlet of said collar and the bore of a hollow movable piston means wherein the volume of said chamber is varied by relative movement of said collar within the piston bore, a variable volume injection chamber defined by the movable piston means and an injection nozzle wherein the volume is varied by movement of the piston and a valve extending in the passage between the piston means and the injection chamber, said valve being closed during injection.

3,395,425
CARD
Alexandr Sergeevich Vinogradov, ulitsa Krasnykh Zor, 400 kvart. dom, kv. 311, Jury Mikhilovich Kapustin, ulitsa Proletarskaya 2, kv. 91, Ilya Nikolaevich Maxjutenko, ulitsa 2 Lagernaya, 50, kv. 35, Vladimir Nikolevich Kiselnikov, ulitsa Malaya Khutorovskay 5, kv. 20, Igor Sergeevich Borisov, ulitsa 2 Lagernaya, 42, kv. 3, and Ivan Mikhailovich Mazalov, Sosnevo, 7 proezd, 57, kv. 8, all of Ivanovo, U.S.S.R.
Filed Nov. 9, 1966, Ser. No. 593,052
3 Claims. (Cl. 19—105)

A card machine in which one part of a pan is arranged beneath the receiver cylinder and extends in part below the transfer cylinder up to a pair of operating rollers arranged beneath the transfer cylinder, a second part of

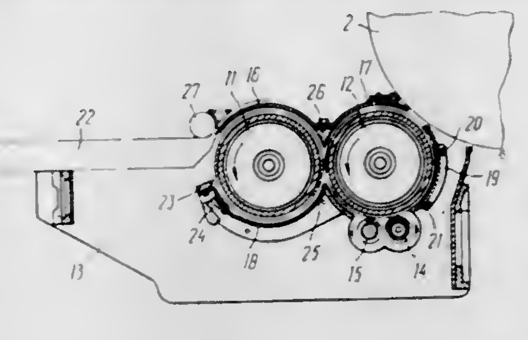

the pan extending as a shield between the pair of working cylinders and the main cylinder and adjustable between the rollers and main cylinder.

3,395,426
MACHINE FOR FORMING RANDOM FIBER WEBS
Howard H. Langdon, Fairport, N.Y., assignor to Curlator Corporation, East Rochester, N.Y., a corporation of New York
Filed Aug. 23, 1966, Ser. No. 574,379
11 Claims. (Cl. 19—156.3)

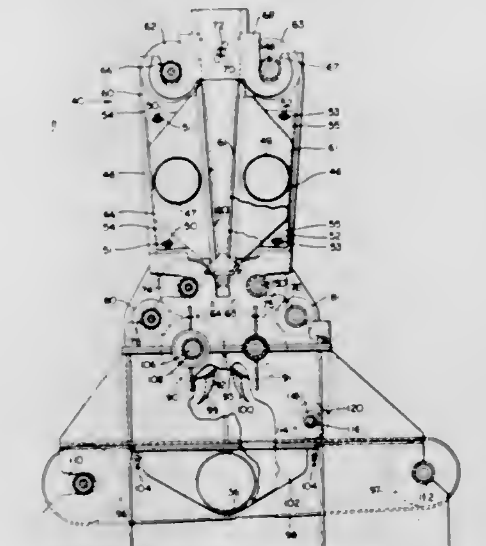

In the illustrated machine, which is intended to handle short fibers, the fibers are delivered by an air stream between two endless foraminous belts that travel around suction boxes. These belts are disposed with confronting reaches that converge toward one another in the direction of their travel; and they compact the fibers and form them into a mat as the fibers are pulled in between the belts by suction. The mat is delivered between two opening rolls which rotate in opposite directions and at different speeds. An air stream doffs the fibers from these rolls and delivers them onto a foraminous condenser by suction so that they are formed into a random fiber web.

3,395,427
MAGNETIC TOP ROLL MOUNTING SYSTEM
Kenneth P. Swanson, Abington, Mass., assignor to Progressive Engineering, Inc., Rockland, Mass., a corporation of Massachusetts
Continuation-in-part of application Ser. No. 515,842, Dec. 23, 1965. This application Mar. 27, 1967, Ser. No. 632,878
11 Claims. (Cl. 19—272)

In association with the drafting rolls of a spinning or roving frame there are provided a saddle and bracket, one being adapted to slip over the arbor of a top roll

and the other being mounted on the corresponding bottom roll. The saddle includes magnet means which attract a ferromagnetic portion of the bracket with a force ade-

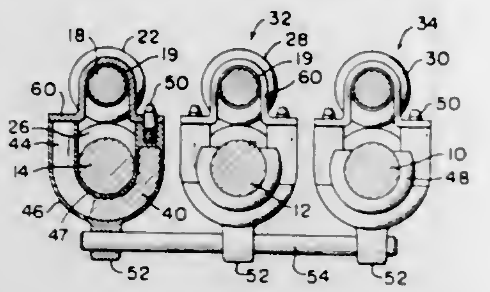

quate to insure proper drafting. Aligning means insure that the bracket and saddle hold the drafting rolls in proper relation.

3,395,428
ALL PURPOSE CLIP
Fred C. Schnabel, 4820 W. 38th St., Minneapolis, Minn. 55416
Filed Oct. 18, 1965, Ser. No. 496,918
1 Claim. (Cl. 24—81)

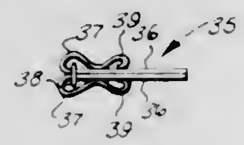

A fastening clip for releasably fastening objects to a fixed support or the like, the clip including a main clip body with a base extension portion constructed for engagement with a fixed support or the like, either by adhesive means, carried thereon, or by screw or other fastening means extensible therethrough and into the fixed support. Another extension portion of the main clip body is resiliently upcurved upon itself to provide a resilient normally closed clamping jaw portion which is adapted to receive papers or other objects to be supported thereby, and to be expanded resiliently on insertion of the papers or other objects for clamping or gripping the same in said jaw portion. Modified forms include a plurality of combined clip members which are resiliently interconnected to form a multiple clip with means for fastening to a support, and also another form including a plurality of clip members which are pivotally interconnected and include means for fastening to a support.

3,395,429
END FITTINGS FOR PUSH-PULL CABLE CORES
Frank S. Payerle, Akron, Ohio, assignor to Morse Controls Inc., a corporation of Ohio
Filed July 1, 1965, Ser. No. 468,852
1 Claim. (Cl. 24—125)

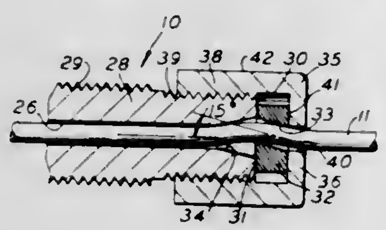

An adjustably positionable end fitting for the core of a push-pull control cable. The fitting has a ferrule with an axially oriented first bore therethrough adapted to receive the core. The bore extends generally perpendicularly through the end wall of the ferrule and is chamfered at the end wall. A disc-like locking plug with a second core receiving bore therethrough is receivable in juxtaposition to the end wall of the ferrule by a tightening cap which has a third core receiving bore. The first and third bores are in register when the cap has the plug juxtaposed to the end wall of the ferrule and at the same time the second bore is inclined at approximately 15° with respect to the first and third bores. The first bore, because of the chamfer, fully communicates with the second bore and the second bore, because of its location through the plug, fully communicates with the third bore when the plug is juxtaposed to the end wall in the ferrule.

3,395,430
APPARATUS FOR FLAME SINGEING OF TEXTILES
Jack Randle, Bury, England, assignor to Ernest Turner & Co. (Salford) Limited, Salford, Lancashire, England
Filed Mar. 7, 1966, Ser. No. 532,156
3 Claims. (Cl. 26—3)

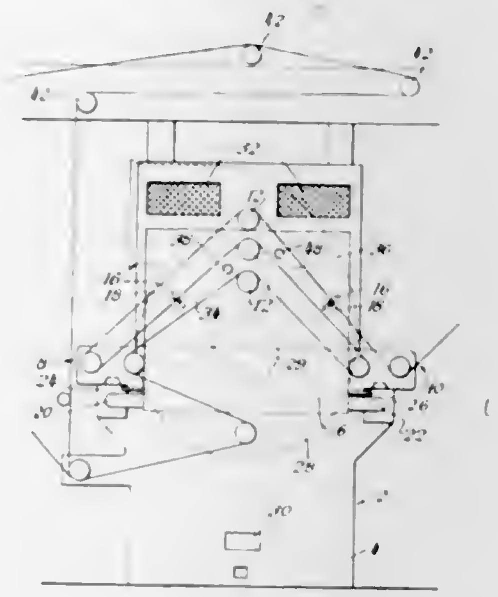

A machine for singeing textiles is provided with burners producing flames that are played upon the faces of fabric which travels through the machine around rollers which support the fabric to form two pockets with one portion of the fabric serving as a common wall between the pockets. At the entrance to each pocket, a burner is placed to simultaneously singe two separate areas on one face of the fabric with the burner at the first pocket singeing one face of the fabric, and the burner at the second pocket singeing the opposite face of the fabric.

3,395,431
CASKET LID WITH UPHOLSTERY AND METHOD OF CONSTRUCTION
William R. Carson, Jr., Leesville, S.C. 29070
Filed Dec. 22, 1965, Ser. No. 515,662
11 Claims. (Cl. 27—19)

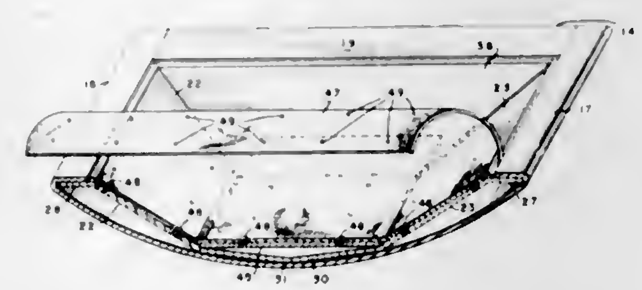

A burial casket lid construction is provided with an exterior wall, such as of bendable metal. The marginal edges are bent inwardly to form flanges along the sides

and ends. These flanges are adapted to hold corresponding marginal edges of stiff pieces of material such as cardboard, complementarily arranged to form in overlapping relation an inner wall of the lid. The pieces are provided with fold lines to delineate the marginal edges. Other fold lines provide a dished contour to the pieces along the inside surface of the outer wall. Providing these pieces in overlapping relation facilitates disposing their marginal edges behind the flanges, after which the pieces are connected together, such as by staples, which lock them in place and prevent their removal. After the pieces are thus set in place, cloth lining is attached by staples or otherwise to provide a desired fold effect. To assist in this step, markings are applied to the cloth beforehand which include points of attachment to the pieces. The markings are applied by means of a templet having a pattern of apertures through which light is directed against the cloth, whereupon the markings are placed at the light spots. This provides a quick and simple construction for what is otherwise regarded as tedious and laborious.

3,395,432
APPARATUS FOR PRODUCING A TEXTILE FABRIC
William S. Hasler, Raymond V. Evans, Peter H. T. Dawson, and Wilfred Parker, Blackburn, England, assignors to Singer-Cobble Limited, Blackburn, England
Filed Feb. 11, 1966, Ser. No. 526,847
Claims priority, application Great Britain, Feb. 13, 1965, 6,311/65
1 Claim. (Cl. 28—1)

An improvement is disclosed in apparatus for producing a textile fabric, such as a carpet, whose surface has a pattern of colors or hues. Such apparatus employs machinery for applying dyes at intervals to selected yarns in accordance with the pattern which is to appear on the fabric's surface. The dyed yarns are fed to another machine which combines the yarns to produce the desired pattern in the textile fabric. The dyeing machinery and the yarn combining machinery are operated concurrently so that normally the dyeing machinery must furnish the dyed yarns at the same rate that such yarns are used in the combining machinery. The improvement resides in providing a storage means which compensates for variations in the speed of the machinery by altering the path length of the yarns between the machines while maintaining the yarns under tension.

3,395,433
APPARATUS FOR HEAT SETTING SYNTHETIC FIBRE YARNS
Nobuhisa Kodaira, 851 Kamirenjyaku, Mitaka-shi, Tokyo, Japan, and Norio Motegi, 1-2-8 Sakura, Setagaya-ku, Tokyo, Japan
Filed July 10, 1967, Ser. No. 652,304
Claims priority, application Japan, July 18, 1966, 41/46,538
7 Claims. (Cl. 28—62)

This invention comprises a vertical passage through which a crimped synthetic fibre yarn to be heat treated is passed.

Heat is applied to the wall of the passage by means of a liquid in a closed vertical container adjacent the passage wall. Liquid in the container is heated by a heating element to vaporize it. The vapor fills the space of the container, thereby heating the wall of the passage and the fibre yarn therein. An exit pipe at the top of the container conducts the vapor out of the top into a condensing chamber. The chamber contains a baffle divider open at the bottom, which results in separation of the purer phase

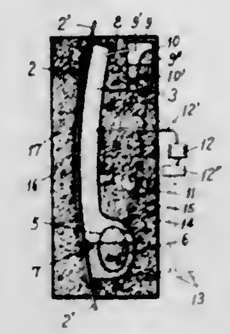

of the condensate on one side of the baffle. A standpipe in the chamber on one side of the baffle removes the purer phase which is recycled to the bottom of the container.

3,395,434
CUTTING INSERT FOR CHIP CUTTING MACHINING
Sven Axel Olof Wirfelt, Sandviken, Sweden, assignor to Sandvikens Jernverks AB, Sandviken, Sweden, a corporation of Sweden
Filed May 24, 1967, Ser. No. 640,959
Claims priority, application Sweden, June 1, 1966, 7,443/66; Apr. 3, 1967, 4,561/67
6 Claims. (Cl. 29—95)

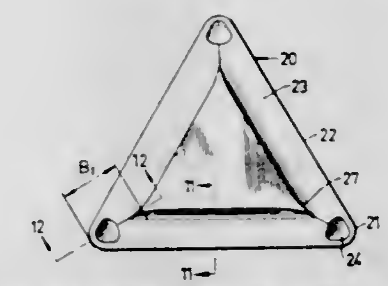

A regularly polygonal cutting insert for chip cutting machining is form-sintered from metal carbide material. It is characterized by the fact that at a corner of the insert (adjacent which corner there is a cutting edge) there is located a main chip breaker in the form of a chip-breaking depression alongside of the cutting edge, and, at said corner, a further depression in the surface of the main chip breaker constituting a secondary chip breaker. In overall effect, the insert has a three-stage (or, triple) chip breaker.

3,395,435
COMBINED REAMING AND FACING TOOL
Sherman L. Bremer, Champaign, Ill., assignor to National Distillers and Chemical Corporation, New York, N.Y., a corporation of Virginia
Filed Dec. 28, 1967, Ser. No. 694,291
5 Claims. (Cl. 29—103)

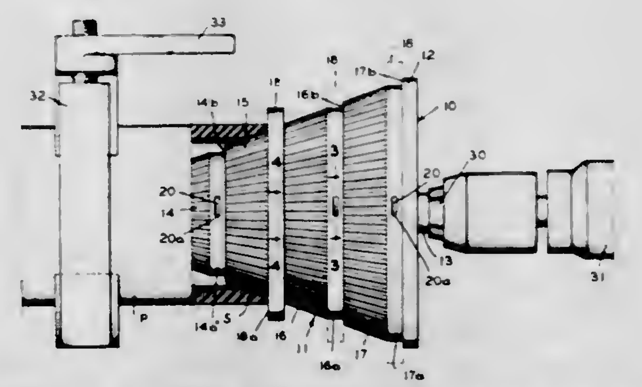

A combined tool for reaming the interior end surface of a plastic pipe or tube to provide a tapered wedge surface for ready attachment to a complementarily conformed plastic connector or fitting and in the same opera-

tion providing a squared and finished face or end surface on said plastic pipe or tube, the facing cutter being detachable from the reamer whereby a single tool may include a plurality of stepped reaming surfaces of increasing diameters to accommodate plastic pipes or tubes of different sizes with a detachable facing cutter for each of the graduated reaming surfaces.

3,395,436
ART OF ROD-END BEARING MANUFACTURE
Donald L. Sullivan, 1416 Kentucky St., Oshkosh, Wis. 54901
Filed Mar. 23, 1964, Ser. No. 353,955
3 Claims. (Cl. 29—149.5)

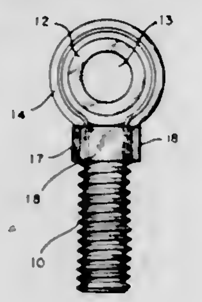

1. In the method of forming a rod-end bearing from a stud, a ring member and a housing with spaced apart depending legs, the steps of permanently uniting said members by inserting an end portion of the stud into the ring member and also inserting the legs of the housing into the ring member between inner surfaces of the ring and outer surface portions of the stud end, and then subjecting the assembled portions to such pressures as will firmly clamp together the nested portions of the ring, the housing legs and the stud end.

3,395,437
METHOD OF MANUFACTURING HYDRODYNAMIC LUBRICATION BEARINGS
Peter P. Grad, Woodstock, N.Y., assignor to Rotron Manufacturing Company, Inc., Woodstock, N.Y., a corporation of New York
Filed May 12, 1965, Ser. No. 455,271
10 Claims. (Cl. 29—149.5)

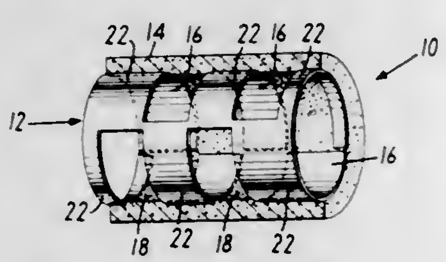

A method of making self-lubricating bearings including the steps of forming a skeleton having internal nonporous surfaces conforming to the geometry of the member to be supported by the bearing and compressing a powdered material around the skeleton to form a porous bearing body having porous internal surfaces even with the nonporous surfaces of the formed skeleton.

3,395,438
METAL CORRUGATED ROOFING SHEETS
Morris Seeff, Johannesburg, Transvaal, Republic of South Africa, assignor to Steel Rolling Corporation (Africa) (Proprietary) Limited, Transvaal, Republic of South Africa
Filed Oct. 11, 1965, Ser. No. 494,622
Claims priority, application Republic of South Africa, Oct. 21, 1964, 5,022
6 Claims. (Cl. 29—183)

A roofing sheet having corrugations or castellations therein with the top of the castellations extending in a curved plane and the bottom of the castellations extending in a curved plane parallel to the top curved plane

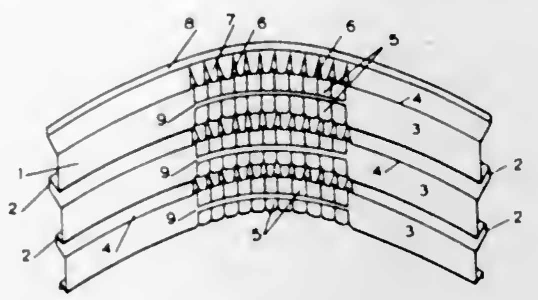

and fluttings in at least part of the bottom of the castellations extending at right angles to the lengths of the castellations.

3,395,439
APPARATUS FOR ATTACHING COMPONENTS TO A CIRCUIT BOARD
Marie Palesi and Richard J. Palesi, both of 794 Independence Ave., Mountain View, Calif. 94040
Filed Oct. 20, 1965, Ser. No. 498,302
8 Claims. (Cl. 29—203)

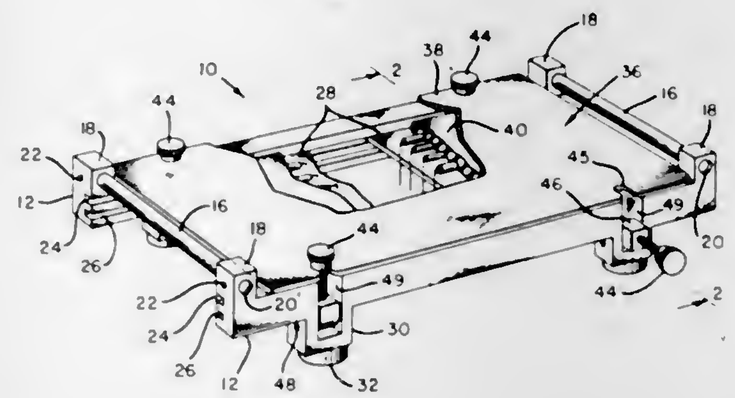

Apparatus for use in mounting electrical components having lead wires extending therefrom to an insulated circuit board having a conductive circuit pattern on at least one face thereof and holes formed through the board to accommodate the component lead wires, which apparatus comprises a frame having a pair of spaced supporting members for supporting a circuit board therebetween. The one face of the board bearing the conductive circuit pattern is faced downwardly on the frame, and the electrical components are positioned on the upper face of the board with the lead wires extending through the board. A cover with a resilient pad is adapted for engagement with the electrical components, and means are provided for urging the cover toward the circuit board with the pad against the components to clamp the same against the board. The apparatus with the components clamped to the circuit board then may be inverted for joining the lead wires to the conductive circuit of the circuit board.

3,395,440
METHOD OF SKIVING A GASKET JACKET
Willard L. Petrosky, Houston, Tex., assignor to John L. Doré Co., Houston, Tex., a corporation of Texas
Filed July 2, 1963, Ser. No. 292,292
3 Claims. (Cl. 29—428)

1. The method of producing a circular gasket jacket of V-shaped cross-section and predetermined diameter including,

rotating a cylinder of jacket material,

skiving a uniform V-shaped layer of jacket material of a length equal to the circumference of a circle of predetermined diameter from the cylinder with a V-shaped tool whose angle varies in relation to the predetermined diameter, and

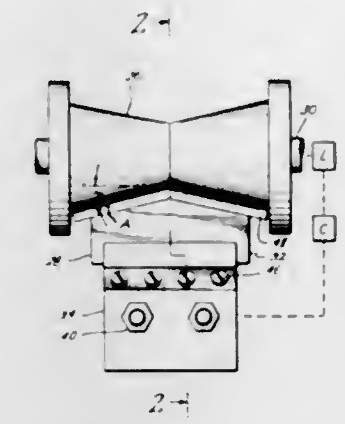

joining the ends of the skived layer a circle to form a circle of the predetermined diameter.

3,395,441
METHOD OF SPIN SWEDGING INSERTS IN HOUSINGS
Edward J. Herbenar, Detroit, Mich., assignor to TRW Inc., Cleveland, Ohio, a corporation of Ohio
Filed Oct. 23, 1965, Ser. No. 503,709
7 Claims. (Cl. 29—441)

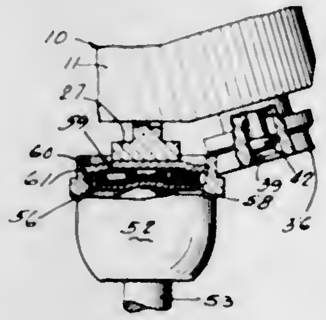

A method of locking insert members, such as retainers or closure discs in surrounding members such as joint housings by embracing the surrounding member with inclined swedge rollers, orbiting the rollers about the central axis of the surrounding member, rotating the orbiting rollers about their own axis, and decreasing the orbital radius of the rollers to radially inwardly deform the surrounding member into locking engagement with the insert member. The surrounding member is first radially deformed into tight gripping relation with the periphery of the insert and is then further deformed into overlapping relation with the insert. The insert is initially pressed against components in the housing to develop a desired preload thereon and the insert may assume any level in the housing to maintain this preload.

3,395,442
METHOD FOR PRELOADING AND RETAINING COMPONENTS IN A HOUSING
Edward J. Herbenar, Detroit, Mich., assignor to TRW Inc., Cleveland, Ohio, a corporation of Ohio
Continuation-in-part of application Ser. No. 503,709, Oct. 23, 1965. This application Mar. 8, 1967, Ser. No. 621,561
4 Claims. (Cl. 29—441)

A method especially adapted for preloading joint components in a socket, locking a socket closure or component retainer at a position in the socket to maintain a desired preload on the components and obtaining the locked position for the retainer by deforming socket material over both faces of the retainer. The socket material can also be simultaneously deformed to provide a groove for anchoring a dust cover or boot on the socket. The

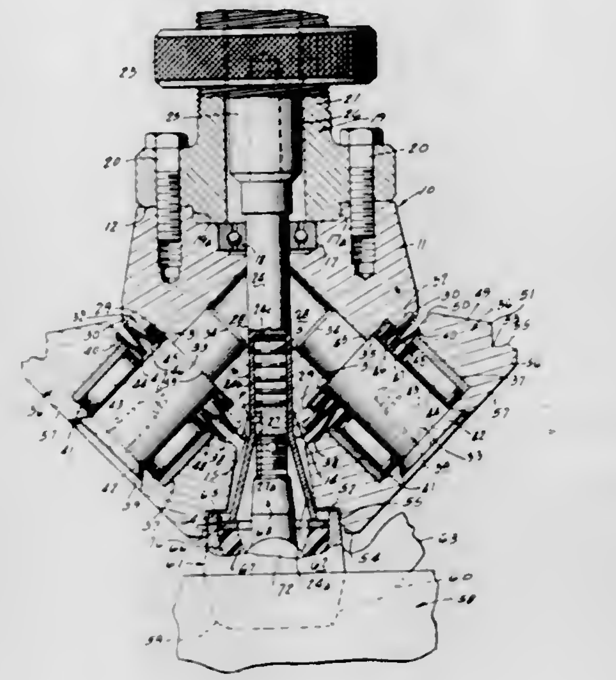

tool used in the method has a rotating head with depending inclined studs carrying swedge rollers around the socket but sufficiently tilted to avoid contact with socket stems or the like.

3,395,443
METHOD OF FORMING A HIGH TEMPERATURE-RESISTANT BOND BETWEEN ALUMINUM AND A DISSIMILAR METAL
George Polinko, Jr., West Chester, Pa., assignor to General Electric Company, a corporation of New York
Filed Sept. 29, 1965, Ser. No. 491,236
7 Claims. (Cl. 29—471.7)

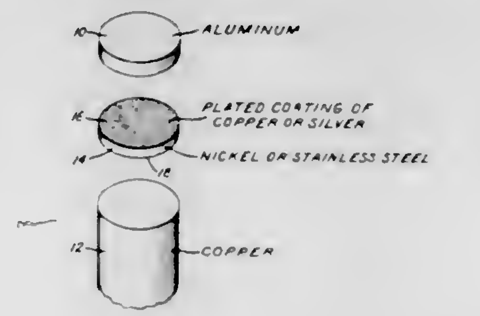

A method of bonding an aluminum part to another part of dissimilar metal, comprising: (1) providing an insert of a metal immiscible with aluminum at temperatures up to 615° C., (2) plating a surface of the insert with copper or silver, (3) joining the insert to the part of dissimilar metal with the plated coating exposed, (4) positioning the aluminum part in contact with the plated coating, and (5) then raising the surrounding temperature to about 615° C. to cause diffusion of the metal of the plated coating into the aluminum, thus effecting a bond between the insert and the aluminum part upon subsequent cooling.

3,395,444
METHOD OF USING EXPLOSIVES TO COAT A METAL BODY
Myron Davis, Schenectady, N.Y., and Ronald J. Carlson, Galloway, Ohio, assignors to General Electric Company, a corporation of New York
Filed Aug. 1, 1966, Ser. No. 569,286
8 Claims. (Cl. 29—529)

1. A method for coating a base metal with a relatively thin layer of coating metal having a relatively low melt-

ing point and low heat of fusion which comprises placing a layer of the coating metal in closely spaced relationship to the surface of the base metal to be coated and separated therefrom by a metal screen, placing a

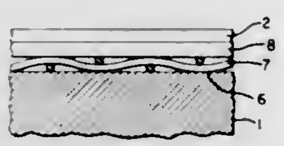

layer of detonating explosive over said coating metal layer and detonating said explosive layer whereby said coating metal is melted, flows between the interstices of said screen and bonds to said base metal.

3,395,445
METHOD OF MAKING SOLID STATE RELAY DEVICES FROM TELLURIDES
Stanford R. Ovshinsky, Bloomfield Hills, Mich., assignor to Energy Conversion Devices, Inc., Troy, Mich., a corporation of Delaware
Continuation-in-part of applications Ser. No. 226,843, Sept. 28, 1962, and Ser. No. 252,511, Jan. 18, 1963. This application May 9, 1966, Ser. No. 564,456
6 Claims. (Cl. 29—569)

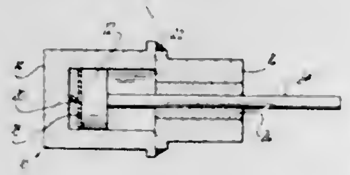

1. The method of making a solid state switch device for connection in an electrical circuit for selectively conducting and blocking current flow therethrough and comprising the steps of produing a telluride body which is capable of having one condition of high resistance for blocking current flow, of having another condition of low resistance for conducting current flow and of being reversibly switched between said one and other conditions by combining tellurium with a material from the class consisting of aluminum and gallium arsenide by the application of heat, said tellurium being at least 50% by weight of the combination, and shaping the body to accommodate the engagement of electrode means.

3,395,446
VOLTAGE CONTROLLED SWITCH
Arne Jensen, Havnberg, Als, Denmark, assignor to Danfoss A/S, Nordborg, Denmark, a company of Denmark
Filed Feb. 24, 1965, Ser. No. 435,019
Claims priority, application Germany, Feb. 24, 1964, D 43,710
5 Claims. (Cl. 29—577)

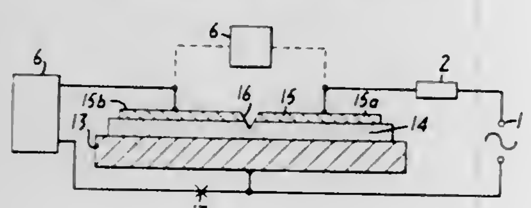

1. Method of manufacturing a voltage controlled switch unit on a support plate, comprising applying a polycrystalline layer consisting essentially of tellurium, with additives taken from elements of Groups IV and V of the Periodic Table of Elements to said plate; applying an electrically conductive electrode layer over said polycrystalline layer; and scratching a crevice across said electrode layer, through said electrode layer and penetrating said polycrystalline layer, whereby to separate said electrode layer into electrode portions, and connecting a switching potential to said electrode portions.

3,395,447
METHOD FOR MASS PRODUCING SEMICONDUCTOR DEVICES
Fritz-Werner Beyerlein, Munich, Germany, assignor to Siemens Aktiengesellschaft, a corporation of Germany
Filed Mar. 25, 1965, Ser. No. 442,759
Claims priority, application Germany, Mar. 26, 1964, S 90,233, S 90,234
10 Claims. (Cl. 29—588)

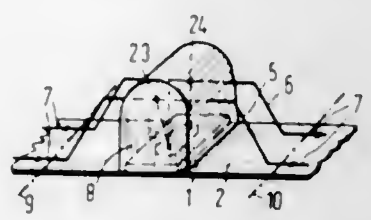

A method for the mass production of semiconductor circuit device units includes alloying semiconductor bodies in spaced disposition to an elongated band substrate structure. Connecting wires are disposed coextensively with the structure in a plane coplanar with the ends of the leads extending upwardly from the semiconductor bodies. The leads are secured to the wires to form electrically conductive junctions between them. The wires are secured to the structure in the spaces between the semiconductor bodies. Each of the semiconductor bodies, its contact leads and junctions are individually enveloped in encapsulating material. The discrete encapsulated units are then separated from the structure by severing the band and the wire on both sides of the capsule.

3,395,448
ARMATURE WINDING AND LEAD WIRE CONNECTING METHOD
Harry W. Moore, Dayton, Ohio, assignor to The Globe Tool and Engineering Company, Dayton, Ohio, a corporation of Ohio
Filed Mar. 18, 1963, Ser. No. 265,674
1 Claim. (Cl. 29—596)

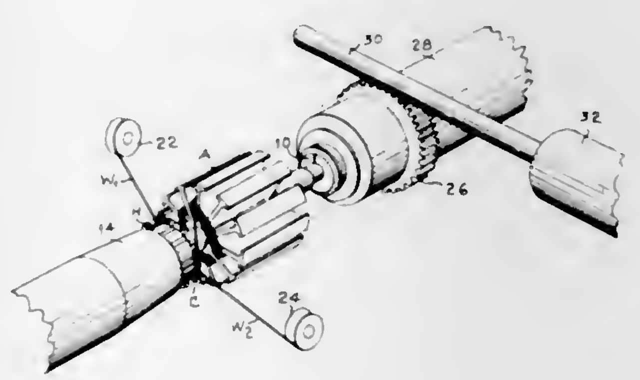

1. In a method of winding an armature core fixedly mounted on a shaft upon which a commutator is also mounted, the armature core having a plurality of circumferentially spaced radial slots and the commutator having a plurality of circumferentially spaced lead receiving tangs, the method including the steps of: supporting the shaft with the armature core in an initial position adjacent a flier and with a pair of said slots in position to receive a coil wound by said flier; winding a coil by said flier in said pair of slots while shielding the tangs by a movable shield overlying a portion of the commutator; stopping

the flier with a lead wire extending from the wound coil, said lead projecting out of one of said pair of slots and beside the commutator; rotating the shaft and, accordingly, the armature core and commutator from said initial position in a first direction to position a selected tang circumferentially offset from said one of said pair of slots adjacent said lead wire; thereafter exposing the tangs by removing the shield from tang shielding position; hooking a portion of said lead wire over the exposed said selected tang by moving said flier; returning the shield into tang shielding position; rotating the armature core in a direction opposite to said first direction and arresting the armature core at its initial position; indexing the armature core to a new position to present a new pair of slots in position to receive a coil wound by said flier; thereafter, with the armature core supported in said new position, winding a coil by said flier in said new pair of slots while shielding the tangs by said shield; stopping the flier with another lead wire extending out of one of said new pair of slots; rotating the shaft, armature core and commutator in said first direction to position another selected tang circumferentially offset from said one of said new pair of slots adjacent said another lead wire; exposing the tangs by removing the shield; thereafter hooking a portion of said another lead wire over another selected exposed tank by moving said flier; returning the shield into tang shielding position; and then rotating the armature core in a direction opposite to said first direction to return it to said new position.

3,395,449
PROGRESSIVELY WINDING ARMATURE COILS AND DEFORMING COIL LEAD PORTIONS IN COMMUTATOR BAR SLOTS
Harry W. Moore, Dayton, Ohio, assignor to The Globe Tool and Engineering Company, Dayton, Ohio, a corporation of Ohio
Filed Apr. 4, 1963, Ser. No. 270,741
2 Claims. (Cl. 29—596)

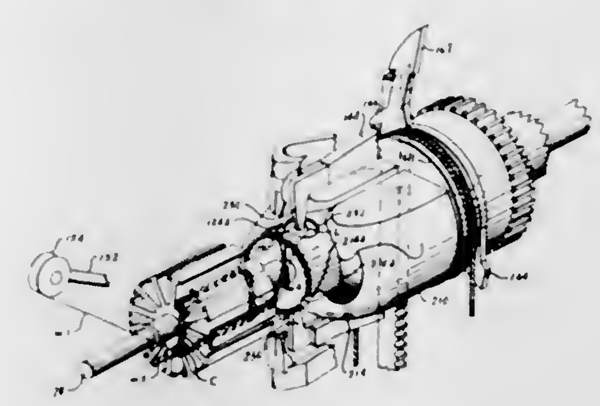

1. In the method of winding coils on an armature core and attaching armature coil lead wires to commutator bars mounted on the armature shaft the steps of: forming a slot in the end of a commutator bar adjacent to the armature, winding a coil in a pair of armature slots, inserting a first portion of the lead wire passing from said coil into said commutator bar slot and deforming said first portion whereby said first portion is frictionally held in said commutator bar slot, forming a loop in the lead wire on the side of said commutator bar slot opposite the armature core which receives said coil and adjacent to the deformed said first portion, inserting a second portion of the lead wire passing between said loop and the armature core in said commutator bar slot and deforming said second portion contiguous to said first portion whereby said second portion is frictionally held in said commutator bar slot, winding another coil connected to said second portion of the lead wire in a pair of armature slots, and severing the loop from said first portion and said second portion.

3,395,450
METHOD OF MANUFACTURING USEFUL GAPS OF ACCURATELY THE SAME LENGTH THROUGHOUT THEIR WIDTH BETWEEN TWO CIRCUIT PARTS OF A MAGNETIC HEAD
Jacob Koorneef and Jacobus Pieter Beun, Emmasingel, Eindhoven, Netherlands, assignors to North American Philips Company, Inc., New York, N.Y., a corporation of Delaware
Filed Dec. 20, 1965, Ser. No. 515,045
Claims priority, application Netherlands, Dec. 31, 1964, 6415293
6 Claims. (Cl. 29—603)

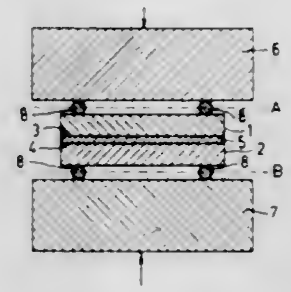

A method of manufacturing a magnetic head with a uniform length gap by the steps of providing first and second blocks of magnetic material to be joined by means of a non-magnetic bonding material, providing first and second pairs of wires adjacent to the upper and lower surfaces of the magnetic block assembly remote from the joined surfaces, placing first and second dies onto the surface of the respective first and second pairs of wires, and applying pressure to the dies which in turn, through the pairs of wires, applies a substantially uniform pressure along the length of the gap formed between the blocks of magnetic material.

3,395,451
METHOD OF MANUFACTURING MULTIPLE MAGNETIC HEADS HAVING ACCURATELY DEFINED GAP HEIGHTS
Hans Peter Peloschek, Emmasingel, Eindhoven, Netherlands, assignor to North American Philips Company, Inc., New York, N.Y., a corporation of Delaware
Filed Nov. 10, 1965, Ser. No. 507,130
Claims priority, application Netherlands, Nov. 10, 1964, 6413057
3 Claims. (Cl. 29—603)

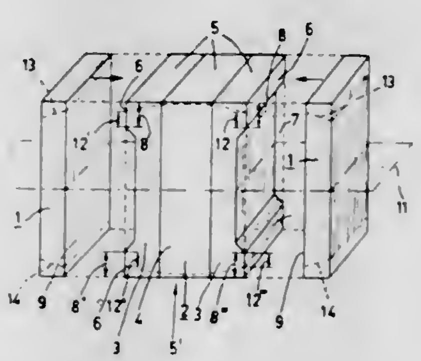

A method of manufacturing a multiple magnetic head with an accurately positioned gap height, including the steps of bonding two ferrite members to opposite sides of a shielding plate to form a subassembly, grinding first and second parallel reference surfaces at right angles to the subassembly sides, grinding an exposed face in each of the subassembly sides, grinding further material from each of the ground faces to form a recess, using one of the end surfaces as a reference and starting at a distance from said reference surface which is greater than the ultimately desired gap surface height until the desired gap height is reached, and cementing a mating piece onto each side with a non-magnetic gap material.

3,395,452
METHODS OF TERMINATING ELECTRICAL DEVICES
Wiley M. Hummel, Prophetstown, Ill., assignor to General Electric Company, a corporation of New York
Original application Mar. 18, 1963, Ser. No. 265,665, now Patent No. 3,210,714, dated Oct. 5, 1965. Divided and this application May 28, 1965, Ser. No. 459,781
7 Claims. (Cl. 29—621)

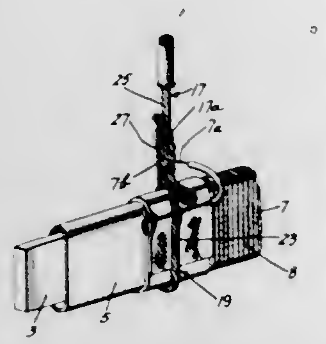

Method for making an electrical connection between a relatively small diameter conductor, forming a coil winding, and a relatively large diameter lead conductor. The lead conductor is wrapped around a support, upon which the coil winding is supported, and then twisted upon itself to firmly grasp the support. The small diameter conductor is then twisted around the lead conductor such that it lies within the valleys formed by the twisting of the large conductor. Subsequent steps may include welding and the application of a clip.

3,395,453
CARPET CUTTER
Earle F. Prater, Long Beach, Calif., assignor to Roberts Consolidated Industries, Inc., City of Industry, Calif., a corporation of California
Filed Apr. 28, 1967, Ser. No. 634,601
5 Claims. (Cl. 30—293)

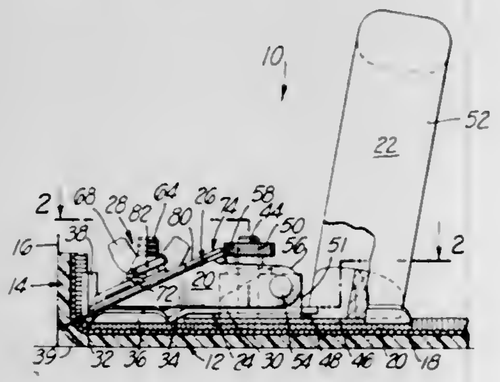

A tool for trimming carpet, including a base plate for sliding over the top of the carpet along an edge to be trimmed, and a blade holder pivotally connected to the base plate and supporting a pair of oppositely oriented, downwardly inclined carpet-cutting blades.

3,395,454
ARTIFICIAL TEETH
John P. Frush, Los Angeles, Calif.
(704 Highland Drive, Pasadena, Calif. 91103)
Continuation of application Ser. No. 378,895, June 29, 1964, which is a continuation-in-part of application Ser. No. 322,426, Nov. 8, 1963. This application Sept. 5, 1967, Ser. No. 667,046
2 Claims. (Cl. 32—2)

An artificial denture includes four artificial teeth mounted on a base. Two of the teeth include a central body shaped like a natural central incisor with the enamel cap on the incisal edge worn away. Each central body along the central portion of each incisal edge appears opaque. The mesial and distal edges of each central body have an optical property which simulates the trans-

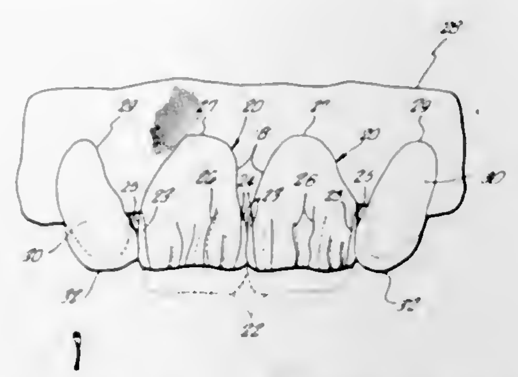

lucency of a natural tooth. The other two teeth are each shaped like lateral incisors with the natural translucent incisal edge present.

3,395,455
FIXED-REMOVABLE DENTAL SPLINTING METHOD AND THE SPLINTS AND FASTENERS USED IN PRACTICING THE METHOD
Grant E. Overby, 1106 S. 4th St., Tacoma, Wash. 99202, and Eric H. Zahn, 219 Medical-Dental Bldg., Seattle, Wash. 98101
Continuation-in-part of application Ser. No. 138,936, Sept. 18, 1961. This application Mar. 18, 1965, Ser. No. 440,907
3 Claims. (Cl. 32—6)

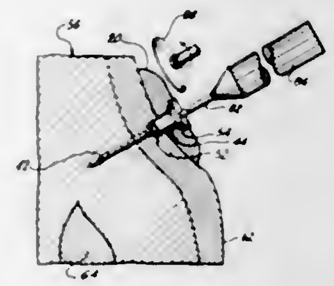

1. A method of securing an apertured splint to a human tooth, comprising:
placing the apertured splint against the tooth to serve initially as a template and subsequently to continue in place as a splint;
cutting a shallow counter bore, in the surface of the tooth in line with the aperture axis;
drilling a continuing bore coaxial with the counter bore axis into the tooth to a depth required for the specific preparation;
rotating a threaded, cement-coated screw into the full depth of the continuing bore to bottom the screw in the tooth;
running an internally threaded flanged collar onto the screw so that the collar flange makes contact with the splint and the collar enters the counter bore of the tooth;
severing the screw as close as possible to the seated collar; and
dressing off any portion of the severed screw extending beyond the collar.

3,395,456
TRIMMING GAUGE
Norris M. Johnson, Rte. 1, Box 40, Sutherlin, Oreg. 97479
Filed May 6, 1966, Ser. No. 548,208
2 Claims. (Cl. 33—82)

A gauge for use in laying shingles for determining the desired amount of uniform overhang of shingles from the

roof face board. The gauge includes a fixed locating element for placement against a previously trimmed shingle and a second locating element either fixed or adjustable

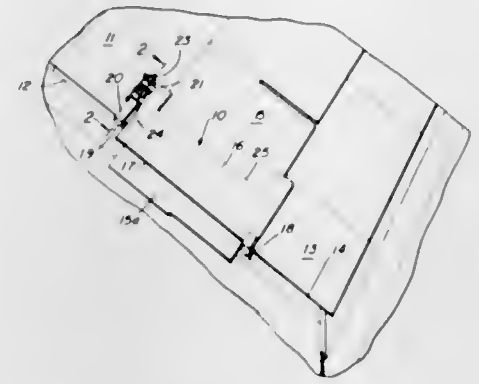

for engagement with the roof face board with the gauge further including a knife guiding edge positionable in parallel, spaced relationship to the face board.

3,395,457
ASSEMBLY DEVICE
Francis J. Callahan, Jr., Chagrin Falls, Ohio, assignor to Crawford Fitting Company, Cleveland, Ohio, a corporation of Ohio
Original application July 13, 1964, Ser. No. 382,132. Divided and this application Oct. 4, 1965, Ser. No. 510,132
2 Claims. (Cl. 33—174)

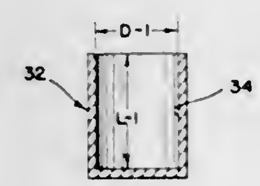

2. A gauging device for measuring the amount of radial contraction required to secure a male member within a coupling of the type which comprises a coupling body having a bore therein, said bore including a tapered mouth, a tapered ferrule in the tapered mouth, and a coupling nut threadedly engaging the coupling body and in force transmitting engagement with the ferrule so that a prescribed amount of rotation of the coupling nut upon the coupling body will force the ferrule a given distance into the tapered mouth causing the ferrule to contract radially upon a male member disposed in the bore to thereby produce the desired connection with the coupling, said gauging device comprising a plurality of cup type gauges, each gauge having a generally right cylindrical blind bore therein with the bottom thereof being generally normal to the walls of the bore, the dimensions of depth and diameter of the bore in each cup type gauge being dictated by the depth of the bore of said coupling body, the degree of taper of the tapered mouth, the degree of taper of the tapered ferrule, and the pitch of the threads between the coupling nut and the coupling body, so that the point of intersection of the bore of a given cup type gauge with a given male member of substantially the size of the bore and received therein will indicate the prescribed amount of rotation of the coupling nut required to produce the desired magnitude of ferrule contraction upon the said male member, the dimensions of bore depth and the dimensions of bore diameter of any particular gauge being either greater or lesser than the corresponding dimensions of any one of the other gauges of the gauging device.

3,395,458
COVERS OR HOODS FOR THE ROLLERS OF MACHINES FOR THE TREATMENT OF MATERIAL IN WEB FORM WITH HUMIDIFIED AIR OR STEAM
Jack D. Whittaker, St. Annes-on-Sea, Harry W. Loveday, Blackburn, Denis R. Barbour, Taunton, and William Tweedle and George S. Dryden, Hele, Exeter, England, assignors to Greenbank Engineering Company Limited, Blackburn, England, and Easton & Johnson Limited, Taunton, England, both British companies
Filed Oct. 7, 1965, Ser. No. 493,743
2 Claims. (Cl. 34—114)

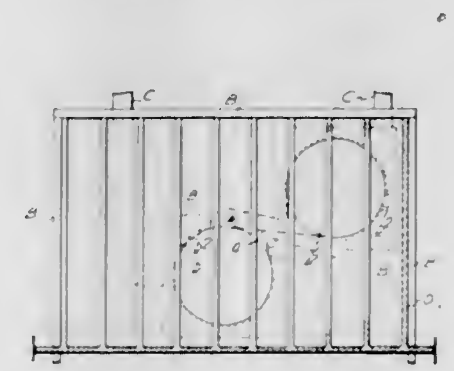

Apparatus for treating a web with hot fluid comprises one or more drums having the web passed over the major portion of the periphery of each, with apertured fluid pressure box surfaces extending around each drum over the web there, and the entire apparatus is enclosed in a cover to prevent dissipation of the fluid escaping the boxes, the inner surface of the cover being heated, as by hot fluid conducting tubes or electrical elements, to prevent the formation of condensate that might drip onto the portions of the web outside the boxes.

3,395,459
TEMPERATURE-SENSITIVE SPEED-ADJUSTABLE CONVEYOR-TYPE DRYER
Frederick T. Taylor, Portland, Oreg., assignor to E. V. Prentice Co., Portland, Oreg., a partnership
Filed Sept. 23, 1966, Ser. No. 581,642
9 Claims. (Cl. 34—52)

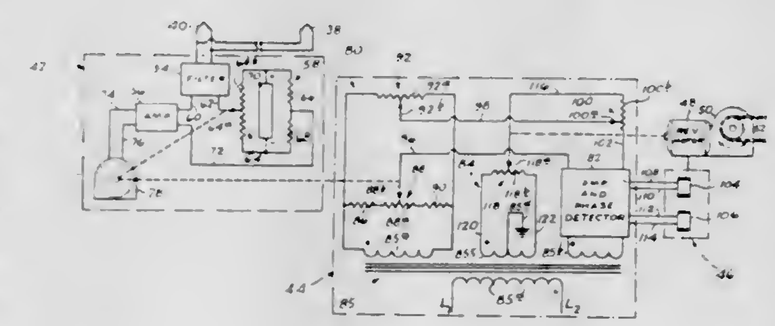

A dryer having a power-driven conveyor deck for transporting articles to be dried, and including temperature-responsive apparatus for adjusting the speed of the conveyor deck to compensate for variations in dryer temperature.

3,395,460
EDUCATIONAL DEVICE
James P. Fay, 18 France St., Norwalk, Conn. 06854
Filed May 17, 1966, Ser. No. 550,688
8 Claims. (Cl. 35—5)

1. An educational device comprising a rotating member having a plurality of separate sound tracks recorded thereon, means for rotating said member, a pickup for each sound track responsive to vibrations received from said sound track, a transducer means for producing an

audible signal corresponding to the sound vibrations recorded on one of said tracks, an untensioned vibration-transmitting filament connected to each of said pickups and to said transducer, tension means connected to said

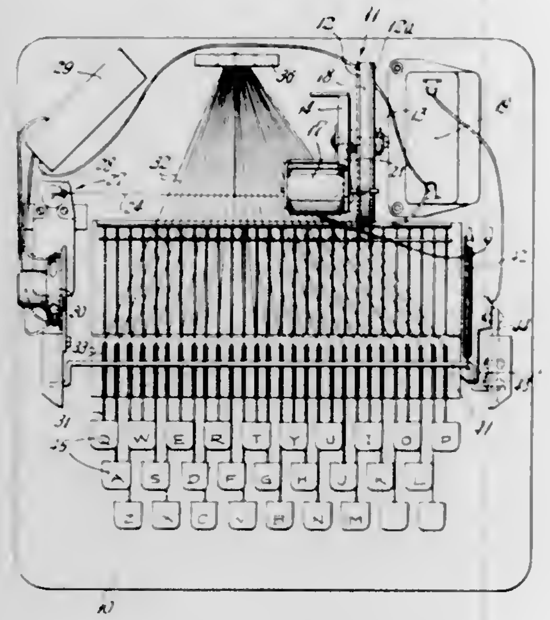

filament and operable to cause the filament to become taut to cause the pickup actuated by said associated sound track to transmit the sound vibrations along said filament to said transducer means, and operating means for each of the said tension means.

3,395,461
VISUAL TRAINING AID
Wally L. Krause, 2118 NE. 143rd, Portland, Oreg. 97230
Filed Mar. 25, 1966, Ser. No. 537,508
6 Claims. (Cl. 35—6)

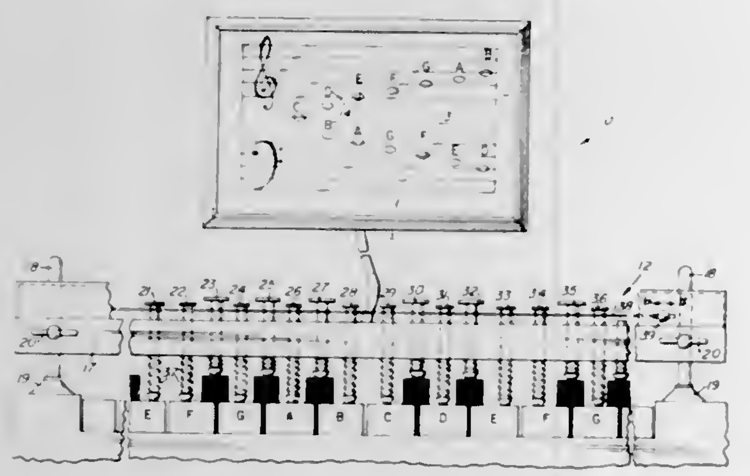

A portable instructional device for teaching playing of keyboard instruments includes visual indicator means for indicating natural notes whenever a white key is struck and also selector means for alternatively indicating a "sharp" or "flat" notes whenever a black key is struck.

3,395,462
SOUND PRODUCING BALL
June L. Sebree, 306 E. Grant St., Macomb, Ill. 61455
Filed Sept. 2, 1965, Ser. No. 484,698
11 Claims. (Cl. 35—8)

An inflatable ball, like a beach ball, has a flexible diaphragm dividing the interior into two halves. A cage is supported by the diaphragm concentrically with the shell of the ball, and a bell is mounted within the cage. In one form of the invention, the bell is mounted on a resilient stem secured to a tape spanning the cage. In a second form of the invention, the bell is suspended from crossed tapes for free swinging movement. In a third form of the invention, the bell is mounted on a resilient stem,

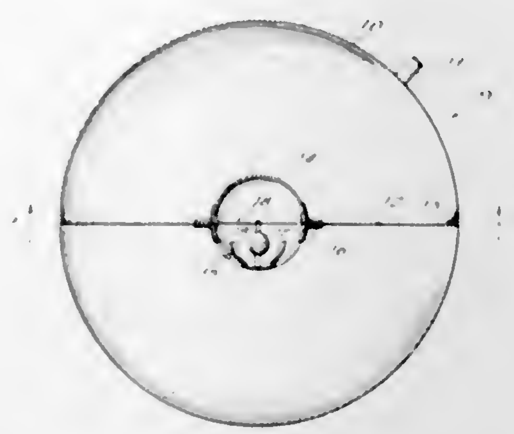

one end of the stem being anchored to the wall of the cage. When the resilient stem is used, the bell can be anchored directly to the diaphrgam without the use of the cage. The bell continues to ring as the ball moves through the air and therefore is useful in teaching depth perception to blind children.

3,395,463
CHESS MACHINE
Donald G. Worden, Fort Lauderdale, Fla., and Fred C. Worden, Des Moines, and Robert O. Diedrichs and Robert E. Trowbridge, Cedar Falls, Iowa, assignors to Donald G. Worden, Fort Lauderdale, Fla., and Fred C. Worden, Des Moines, Iowa
Filed Apr. 21, 1966, Ser. No. 544,289
9 Claims. (Cl. 35—8)

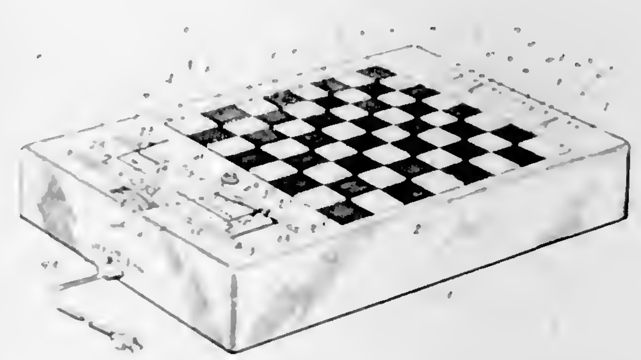

A chess machine which communicates information to the players by means of a data card which activates various lights on the chess board. The machine consists of a game board of the chess or checkers type having a signal light adjacent each of the game positions. The data card is fed into the machine and the bit locations thereon causes switch elements to light various of the lights to indicate the various moves to be completed.

3,395,464
TEACHING MACHINE SYSTEMS
John C. L. Leslie and Burton E. Dieruf, Albuquerque, N. Mex., assignors, by mesne assignments, to Robert Lloyd Leslie
Filed Mar. 15, 1966, Ser. No. 534,369
9 Claims. (Cl. 35—9)

A multi-medium educational machine is disclosed employing visual still or moving pictures, written instructions and sound tracks. Coded information on the film

track and sound track are used to exercise all internal controls except for those requiring answers to questions posed in the educational program which require the op-

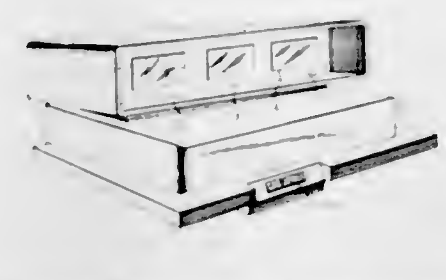

erator only to push a button indicating the answer. Specific control features and special film geometry contribute to a versatile yet simple machine operation adapted to present educational programs.

3,395,465
ROTARY RAKE OR SCARIFIER
Sigurd J. Andreasen and Owen A. Meyer, both of P.O. Drawer 630, Bowie, Tex. 76230
Filed May 14, 1965, Ser. No. 455,770
3 Claims. (Cl. 37—2)

An elongated relatively flexible, rolling, toothed, rake-like member to be moved along embankments and the like and rotated by means of a traction vehicle wheel to clear the embankment of weeds and brush and to scarify the terrain of the embankment so it will receive sod or seed distributed by the hydraulic planting method. The device is joined in sections to enable the length thereof to be varied. Provision is made for journaling a rolling, liquid weighted member thereto.

3,395,466
SNOW THROWER
Glen Klapprodt, Mount Morris, Ill. 61054
Filed June 28, 1965, Ser. No. 467,353
4 Claims. (Cl. 37—43)

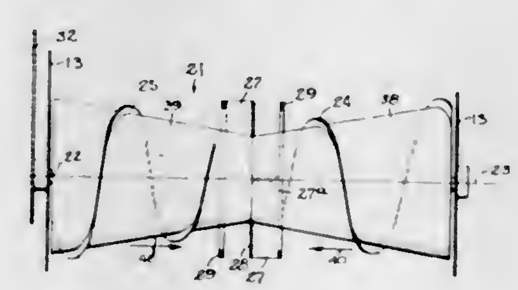

A snow plow having part cylindrical scoop with an open front end and carrying an elongated impeller supported for rotation about a horizontal transverse axis. The impeller comprises two conical body sections tapering toward the center, two helical blades wrapped around the body sections and similarly tapering in outside diameter toward the center, and a central blower formed by radial paddles on opposite sides of a central disk. When the impeller is driven through a drive mechanism on the scoop, the helical blades throw snow axially of the impeller, leaving the snow in free flight toward the blower, from which the snow is discharged through a central spout.

3,395,467
METHOD AND APPARATUS FOR HARVESTING PEAT MOSS
William M. Allen and George E. Mannning, Columbus, Ohio, assignors, by mesne assignments, to Michigan Peat, Inc., New York, N.Y., a corporation of New York
Filed June 18, 1965, Ser. No. 464,950
4 Claims. (Cl. 37—195)

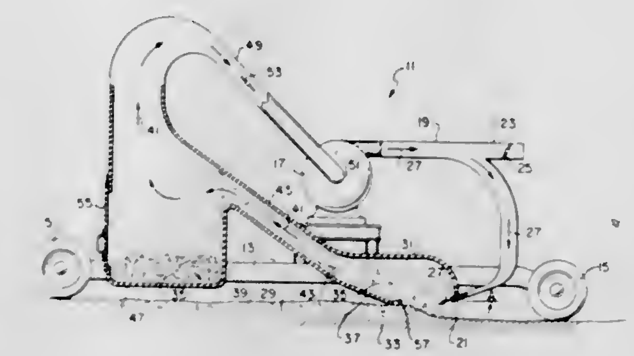

A method and apparatus for separating a strata of dry material from a strata of damp material by directing a first stream of air onto the strata of dry material to loosen same from the strata of damp material. A second stream of air is produced contiguous to the loosened material for entraining said loosened material therein.

3,395,468
IRONING MACHINE
Roy F. Schwegler, Rock Island, Ill., assignor to Ametek, Inc., New York, N.Y., a corporation of Delaware
Filed Sept. 9, 1965, Ser. No. 486,021
5 Claims. (Cl. 38—55)

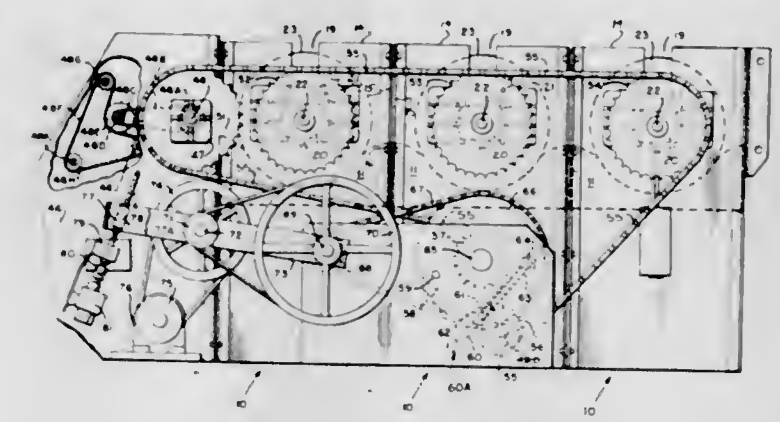

On ironing machine with a plurality of modules, each having a steam chest and an ironing roll, each roll having drive sprockets engageable by a chain, a drive unit having a drive sprocket also engageable with the chain and a slack take-up sprocket, the transmission having means to change the speed of its drive sprocket and being arranged so that a selected number of modules can be assembled as a unit and driven thereby.

3,395,469
PRESSING IRONS
Jack J. Gilbert, Spring Valley, N.Y., assignor to Bernard Frank, Shamokin, Pa.
Filed Sept. 14, 1966, Ser. No. 584,313
5 Claims. (Cl. 38—69)

The perforated front wall of a casing is the pressing surface of this device. Said casing overhangs in a forwardly direction and is carried by a releasable head serving as the cover for an upright water tank which is the handle of the device. An air pump on said cover, for pressurizing

the water, is operated by grasp and release movements of the handle-holding hand, whereby water is forced upwardly through a tube within the tank, and discharged as a spray into said upper casing wherein an electrically-

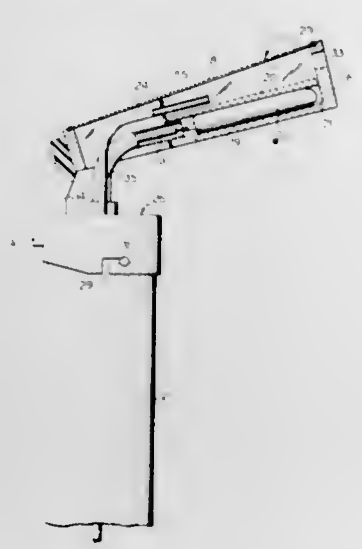

heated flash boiler vaporizes it, whereupon the steam generated is emitted from said perforations in the forward ironing surface. Said cover member also carries a switch to control the circuit of the heating element.

3,395,470
GARMENT LABEL AND METHOD OF USE
Stanley M. Voice, Wyncote, Pa., assignor to H. Daroff & Sons, Inc., Philadelphia, Pa., a corporation of Pennsylvania
Filed Dec. 13, 1965, Ser. No. 513,362
6 Claims. (Cl. 40—2)

A method for identifying the fabric of a garment which comprises providing a label having a window therein which is permanently secured to excess removable fabric of the garment. The label is secured so that the excess removable fabric of the garment shows through the window. The label can be removed by cutting the fabric around said label whereby a label for identifying the fabric is provided having a small piece of the fabric of the garment appearing through the window. A purchaser of the garment can then use the label to purchase matching accessories.

3,395,471
IMAGE REPRODUCING DEVICE FOR REMOTELY CONTROLLED PRESENTATION OF AN IMAGE
Hans Fredrik Rydström, 17 Hagnasvagen, Lidingo, Sweden
Filed July 27, 1966, Ser. No. 568,231
Claims priority, application Sweden, Apr. 26, 1963, 4,575/63
3 Claims. (Cl. 40—28)

An image reproducing device for remotely controlled presentation of an image in which a front surface of a contrast screen is defined by apertures of recesses each comprising at least one pressure sensitive contrast means, to which is attached a contrast element to be brought into

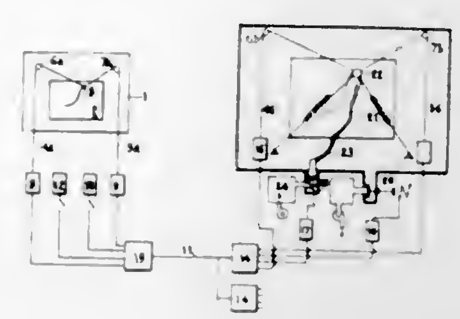

a position adjacent the screen surface and a position remote from said surface. Movement of the contrast element between the two positions is effected by means of a bellow actuated by pneumatic means.

3,395,472
TRAVELING TAPE DISPLAY
Arthur J. Look, Elmhurst, Ill., assignor to Prevue Display Service, Inc., Chicago, Ill., a corporation of Illinois
Filed June 8, 1966, Ser. No. 556,120
4 Claims. (Cl. 40—32)

A traveling tape display which includes, generally, a frame supporting a pair of rollers in spaced relation and about which the tape travels, the driving mechanism for the rollers, and the lighting, if desired, for the display. The tape has a track formed about its interior, preferably parallel to and adjacent to its upper edge, which is engageable within a correspondingly shaped guide slot formed in each of the pair of rollers as the tape travels about them, to maintain the alignment of the tape on the rollers. One of the rollers has a peripheral slot therein in which is engaged a belt which is, in turn, coupled to driving means such as an electric motor for driving the roller and hence the tape. The track, the drive means, and the lighting, if provided, are all concealed between the opposite sides of the tape so that when mounted only the tape is observed.

3,395,473
SLIDE PROJECTOR
Karl Deeg, Unterhaching, near Munich, and Wilfried Hofmann, Munich, Germany, assignors to Agfa-Gevaert Aktiengesellschaft, Leverkusen, Germany
Filed Feb. 9, 1966, Ser. No. 526,150
Claims priority, application Germany, Feb. 26, 1965, A 48,511
19 Claims. (Cl. 40—79)

A slide projector wherein the gripper for slides is movable back and forth between extended and retracted positions by means of a parallel mechanism. The gripper trans-

ports slides without tilting and is fully concealed in the housing of the projector when moved to retracted position.

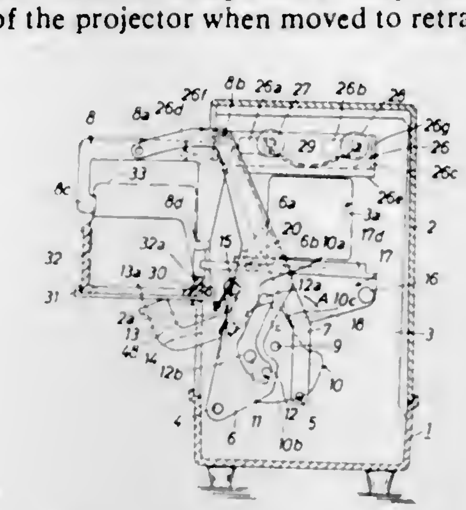

The parts of the parallel mechanism are also concealed in the housing in retracted position of the gripper.

3,395,474
SLIDE PROJECTOR
Alfred Winkler and Wilfried Hofmann, Munich, and Karl Deeg, Unterhaching, near Munich, Germany, assignors to Agfa-Gevaert Aktiengesellschaft, Leverkusen, Germany
Filed Jan. 21, 1966, Ser. No. 522,287
Claims priority, application Germany, Feb. 5, 1965, A 48,331
12 Claims. (Cl. 40—79)

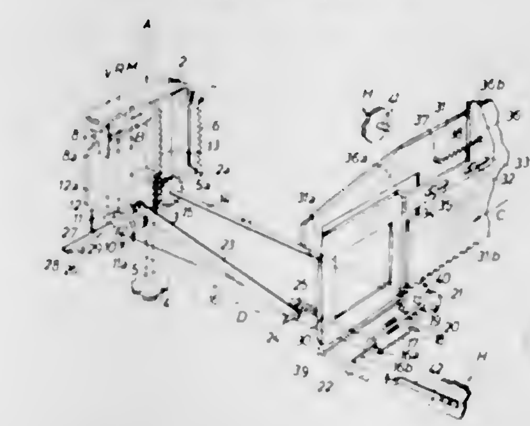

A slide projector wherein a vertically reciprocable actuating member is mounted in a recess at the rear wall of the housing and carries a horizontally reciprocable selector serving to set the magazine transporting mechanism for forward or reverse operation. The actuating member initiates movements of the magazine and the transfer of slides into and from the magazine.

3,395,475
ELECTRICAL ILLUMINATION DEVICES
Arthur William Moss, Walsall, England, assignor to H. Frost & Company Limited, Walsall, England, a British company
Continuation of application Ser. No. 342,050, Feb. 3, 1964. This application Mar. 7, 1967, Ser. No. 621,356
3 Claims. (Cl. 40—106.54)

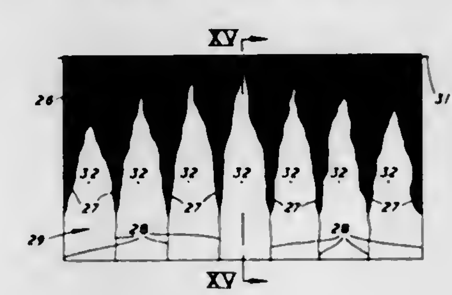

A flame simulating illumination device is composed of vertically extending reflecting surfaces spaced by nonreflecting surfaces on a loosely suspended curtain, which is illuminated by a source of flickering light and agitated by air currents produced by a fan. The reflecting surfaces are viewed through a translucent screen to produce the effect of tongues of flame.

3,395,476
ELECTRIC ILLUMINATION DEVICES
Arthur William Moss and Ernest Eugene Gardiner, Walsall, England, assignors to H. Frost & Company Limited, Walsall, England, a British company
Continuation of application Ser. No. 341,894, Feb. 3, 1964. This application Mar. 7, 1967, Ser. No. 621,364
1 Claim. (Cl. 40—106.54)

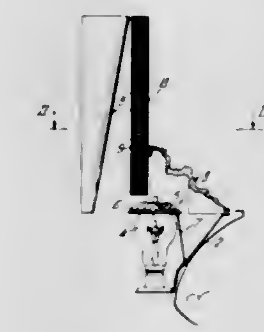

A flame simulating illumination device is composed of vertically extending reflecting surfaces illuminated by a source of flickering light, and a diffusing screen through which the reflecting surfaces are viewed. The screen has a diffusing surface formed by closely spaced, minute horizontal ribs and grooves, as by abrasions, to diffuse the transmitted light vertically and produce the effect of tongues of flame.

3,395,477
INDICIA-MOUNTING FRAME FOR OVERHEAD PROJECTORS
Junor O. Claudel, Rte. 2, Box 212, Baker, La. 70714
Filed Apr. 22, 1966, Ser. No. 544,576
9 Claims. (Cl. 40—158)

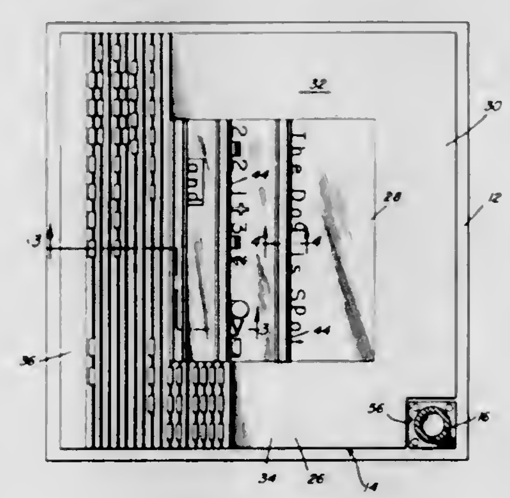

A transparent panel adapted for horizontal disposition on the illuminated panel of an overhead projector and having an elongated opaque belt defined thereon in combination with a plurality of indicia defining members comprising transparent panel-like members including opaque portions defining pre-selected indicia and adapted to be correctly positioned on the transparent panel section with the indicia defining opaque portions of the transparent panel-like members correctly positioned laterally of one longitudinal edge portion of the opaque belt even when some of the opaque portions are correctly posi-

tioned relative to the belt when spaced laterally therefrom and with the panel-like members being free of nontransparent portions thereof, except for the indicia forming opaque portions thereof, overlying any light transmitting transparent portions of the panel section disposed outwardly of the belt.

3,395,478
RIFLE MOUNTED AUXILIARY FIREARM AND MULTIPROJECTILE CARTRIDGE THEREFOR
Earle M. Harvey, Agawam, Mass., assignor to the United States of America as represented by the Secretary of the Army
Filed Mar. 2, 1962, Ser. No. 177,707
5 Claims. (Cl. 42—1)

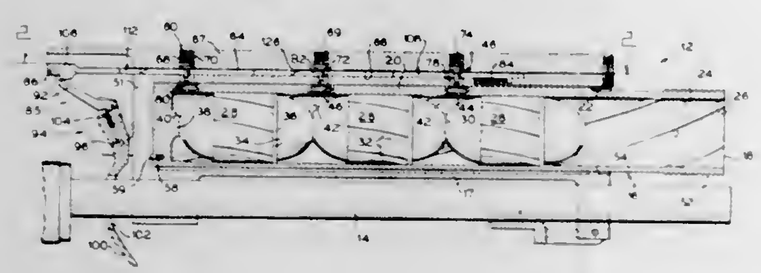

1. A semiautomatic auxiliary firearm attachable to a rifle barrel and including in combination a cartridge having rifled tube, a plurality of projectiles arranged in said tube in coaxial tandem alignment, an inclosed chamber formed rearwardly of each of said properties, and detonators disposed in said tube so as to be respectively dischargeable into each said inclosed chamber and a receiver attachable to the rifle barrel, said receiver being of tubular configuration designed for receiving said cartridge for discharge, and including a firing mechanism comprising a plurality of firing pins spring-biased in said receiver for displacement against respective ones of said detonators for initiation thereof, a trigger actuated sear bar arranged for releasably holding said firing pins in cocked positions, means on said sear bar designed for cooperation with said firing pins for separately and successively initiating said detonators starting with the front one thereof in said tube when said sear bar is trigger actuated, and a cocking bar arranged for cooperation with said firing pins for displacement thereof to respective cocked positions.

3,395,479
AMMUNITION MAGAZINE WITH REMOVABLE FOLLOWER
George E. Collins, Rte. 1, Wyoming, Minn. 55092
Filed Dec. 22, 1966, Ser. No. 603,822
10 Claims. (Cl. 42—50)

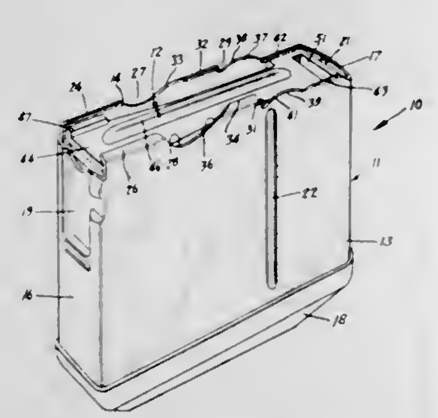

An ammunition magazine having capacity to carry a plurality of rifle shells and operable to consecutively feed these shells into a position for chambering in a rifle. The magazine has a casing for storing the shells and a spring biased follower for moving the shells to the top of the casing. The top of the side walls of the casing has inwardly directed flanges provided with cut-outs which permit the follower and the biasing spring to be removed from the casing enabling the entire magazine to be cleaned thereby insuring proper movement of the shells in the casing and smooth feeding of the shells from the casing.

3,395,480
FISH HOOKS AND LURES
William R. McPherson, P.O. Box 1044, Vernon, Tex. 76384
Filed Oct. 12, 1965, Ser. No. 495,176
5 Claims. (Cl. 43—42.09)

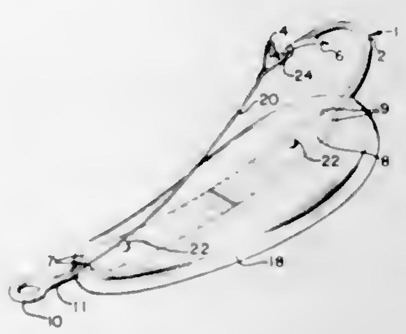

A fish hook constructed so as to enable various lures to be readily and quickly attached thereto and detached therefrom to enable the desired lure to be used to fit the occasion. The fish hook is formed with an elongated, flattened shank portion and has means thereon to complementally engage and be detachably secured to other means on a fishing lure body. The hook shank preferably is a longitudinally-curved dove-tail shaped body to engage within a corresponding-shaped groove in the lure body. A weed guard may be provided having an end secured to the hook shank adjacent the hook eye. The lure bodies may be of any desired color and of a density to either float or sink.

3,395,481
TOY FOR FORMING BUBBLES
Elizabeth H. Galloway, 4 Willow Bank Road, Georgetown, S.C. 29440
Filed Mar. 10, 1966, Ser. No. 533,393
7 Claims. (Cl. 46—6)

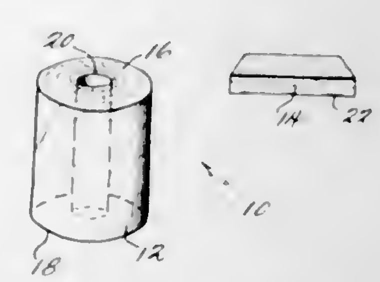

A toy for forming bubbles in which a casing, having a continuous-surfaced bore extending therethrough, is provided with the top flat planar surface, intersected by the bore at a point disposed from the outer perimeter of the top surface, and having an area greater than the cross-sectional area of the bore for accommodating the expanding hemispherically shaped bubble as air is displaced from the bore upon immersion of the casing in water.

3,395,482
SPINNING DISK TOY
Michele Sarro, 143 Grove St., Brooklyn, N.Y. 11221
Filed July 1, 1965, Ser. No. 468,752
5 Claims. (Cl. 46—47)

A toy wherein a disk is mounted for longitudinal movement along a spiral shaft in a manner whereby a rota-

tional movement of the disk is produced, normally resulting in actual flying of the disk from the shaft. The movement of the disk along the shaft can be either in

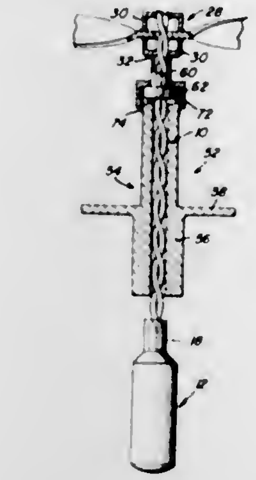

response to gravity or effected through a booster member incorporating a bearing mounted stem which tends to substantially eliminate any frictional drag between the booster and the disk.

3,395,483
CRAWLING TOY
Thomas R. Mullins, 4510 Arlen, Apt. 101, El Paso, Tex. 79904
Filed July 28, 1965, Ser. No. 475,330
10 Claims. (Cl. 46—104)

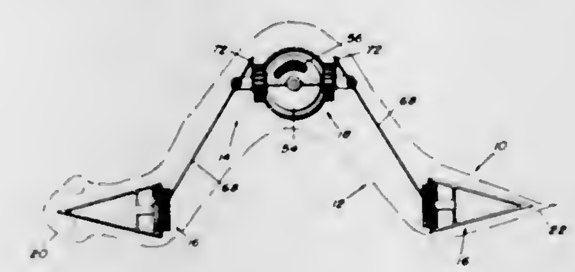

A crawling toy including an axially elongated body having forward, middle and rear sections. The forward and rear sections carry surface engaging rollers, movable only in a forward direction, while the middle section carries actuating means connected with the rollers. The actuating means is operable to alternately displace the forward and rear sections to one side of the body axis, then to the other side thereof, to thus advance the toy in a serpentine manner along a supporting surface.

3,395,484
DOLL FIGURES HAVING AN INTERNAL WIRE SKELETON
Betty Y. Smith, Box 36, Lilliwaup, Wash. 98555
Filed June 22, 1966, Ser. No. 559,498
7 Claims. (Cl. 46—151)

1. A flexible wire skeleton construction for a doll figure in which each individual length of wire used has previously been covered with a soft, self-sealing, self-adhesive material, comprising a shoulder and chest portion formed by a loop of wire; a pelvis area formed by a loop of wire and connected to the shoulder and chest portion by a wire length and connected to the shoulder and chest portion by a wire length forming a back bone; two lengths of wire, each of which is connected at its upper end to the pelvis area and each of which has its lower end connected to a flexible foot construction, said foot having individual wires for each toe joined together by lighter weight wire; two lengths of single wire, each of which is connected at its upper end to the shoulder and chest portion and its lower end to a flexible hand, said hand having individual wires for each of the ex-

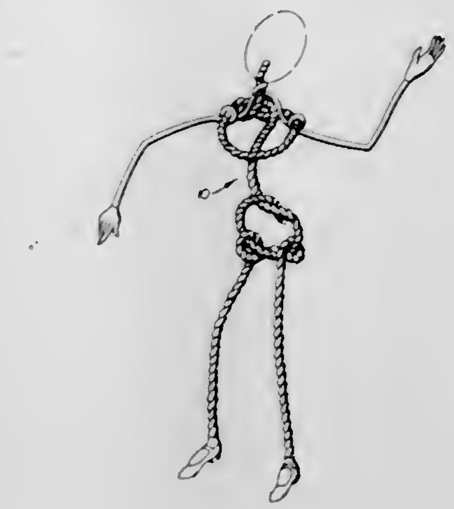

tremities joined together by wire, whereby the entire skeleton including the extremities of the hands and feet may be individually flexed to various positions, and is capable of remaining and balancing in said position.

3,395,485
CROP PROTECTING PLASTIC DISPENSING MECHANISM
Thomas C. Rooklidge, 6051 Hoyt St., Arvada, Colo. 80002
Filed Oct. 31, 1966, Ser. No. 596,040
1 Claim. (Cl. 47—20)

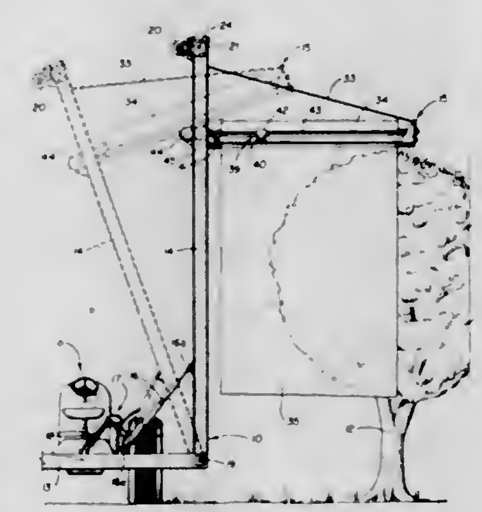

This invention relates to a vehicle-supported dispensing mechanism which dispenses an adhesive plastic sheet material over fruits and vegetables in order to minimize frost damage thereto.

3,395,486
FLOWER POT
James G. Campbell and Robert Lurie, Jacksonville, Fla.; said Campbell assignor to Campbell-Lurie Plastics, Inc., Jacksonville, Fla.
Continuation of application Ser. No. 453,702, May 6, 1965. This application Oct. 28, 1966, Ser. No. 590,440
7 Claims. (Cl. 47—34)

1. A flower pot having a wall composed of two thin laminated sheets of thin solid plastic material, the inner

sheet being opaque and the outer sheet being heat-reflective, and having an outstanding flange around its upper

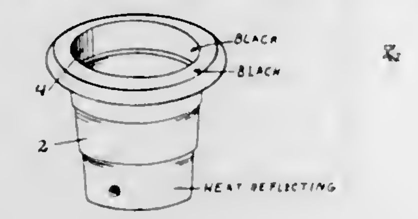

edge, the upper surfaces of said flange being formed by a part of said opaque sheet.

3,395,487
METHOD OF GROWING GRASSES UNDER MODIFIED LIGHT
John A. Long, Eugene W. Mayer, and George R. McVey, Marysville, Ohio, assignors to The O. M. Scott & Sons Company, Marysville, Ohio, a corporation of Ohio
Filed Mar. 24, 1966, Ser. No. 537,137
6 Claims. (Cl. 47—58)

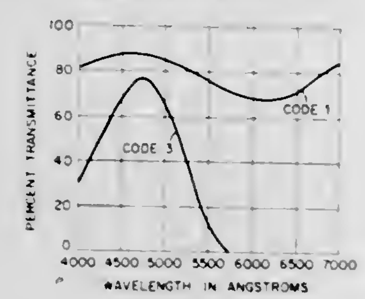

1. The method of producing a turf in a controlled environment, comprising the step of growing said turf under conditions in which the wave length and intensity of the light reaching the turf are regulated by isolating said turf from light incident thereon with a barrier of a material having a transmittance of from about 55 to about 77–80 percent and maximum transmittance for energy having wave lengths in the range of from about 4000 to about 6000 angstroms.

3,395,488
VERTICALLY SWINGING DOOR
Adrianus Anthonius Van Bergen, Breda, Noord-Brabant, Netherlands, assignor to Frits Bode Mechanische Bouwmaterialen N.V., Breda, Noord-Brabant, Netherlands, a Dutch corporation
Filed Feb. 23, 1966, Ser. No. 529,581
Claims priority, application Netherlands, Mar. 1, 1965, 6502565
1 Claim. (Cl. 49—204)

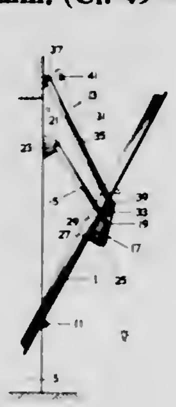

A vertically swinging door comprises a doorframe, a panel, and link means on each side of the panel mounting the panel on the doorframe for vertical swinging movement relative to the frame. Each link means comprises a relatively long link and a relatively short link pivotally interconnected at a first point. The long link is pivotally connected to an upper portion of the doorframe at a second point. The short link is pivotally connected to the panel at a third point. The long and short links form an obtuse angle with each other that opens toward the panel in the closed-door position. Said first and third points are about the same distance from said second point in the fully open position of the door. Each link means includes a further link pivotally connected at a fourth point to the doorframe above said second point and at a fifth point to the panel above said third point in the closed-door position, said fourth and fifth points lying in a common plane which is disposed between the panel and said third point in the closed-door position. Torsion spring means common to both link means, and flexible pull members interconnecting the torsion spring means with the long links, continuously apply an upward force to the long links along lines of force that lie in a plane spaced from said second points on the side of said second points opposite the panel.

3,395,489
FENCE
George Banse, Sterling, Ill., assignor to National Manufacturing Co., Sterling, Ill., a corporation of Illinois
Filed Apr. 19, 1966, Ser. No. 543,589
4 Claims. (Cl. 49—381)

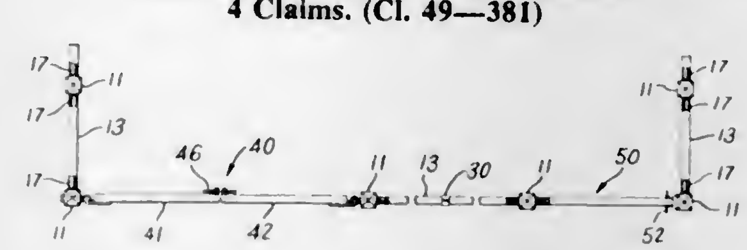

A fence includes a series of spaced-apart posts and a pair of oppositely-disposed rails connected to adjacent posts for supporting a series or ornamental panels. Each of the rails comprises a channel-shaped member having a base and a pair of depending legs. The legs include a pair of inwardly bent flanges for gripping and supporting the panels.

3,395,490
SLIDING-DOOR LATCHING AND LOCKING DEVICE
Arthur G. Diack, 1049 E. 65th St., Inglewood, Calif. 90302
Filed May 9, 1966, Ser. No. 548,514
7 Claims. (Cl. 49—449)

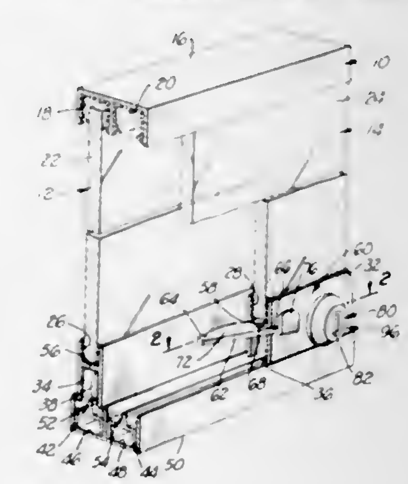

A latching and locking device for horizontally movable, bypassing sliding doors, comprising a latch element pivotable about a vertical axis in a slot in one of the doors and insertable into another slot in the other door to latch the two doors together against relative horizontal and relative vertical movement. The latch element may be locked in its inserted position.

3,395,491
DEVICE FOR RADIAL ADJUSTMENT OF A GRINDING HEAD OF A TOOL GRINDING MACHINE
Hermann Bürger, Huckeswagen, Rhineland, and Günter Zeise, Wuppertal-Ronsdorf, Germany, assignors to W. Ferd. Klingelnberg Söhne, Remscheid-Berghausen, Germany
Filed Mar. 31, 1965, Ser. No. 444,154
Claims priority, application Italy, Apr. 2, 1964, 7,099/64
9 Claims. (Cl. 51—34)

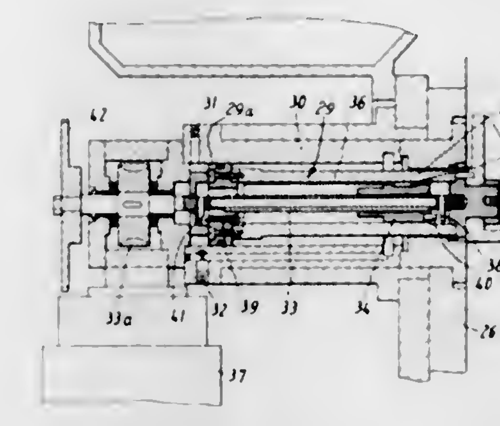

Grinding machine having a reciprocable grinding carriage and a grinding head on the carriage which can be advanced incrementally toward the work with an adjustable stop for stopping the advancing movement of the grinding head.

3,395,492
TOOL GRINDING MACHINE WITH WET GRINDING DEVICE
Hermann Bürger, Huckeswagen, Rhineland, Germany, assignor to W. Ferd. Klingelnberg Söhne, Remscheid-Berghausen, Germany
Filed Mar. 31, 1965, Ser. No. 444,191
Claims priority, application Italy, Apr. 2, 1964, 7,102/64
1 Claim. (Cl. 51—50)

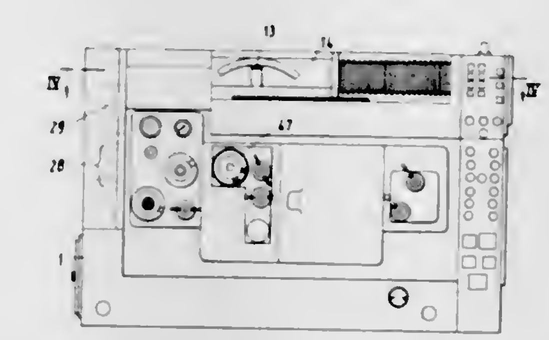

Grinding machine having a frame with a working space in the frame in which space is a cylindrical guide member which supports a grinding carriage while a rail in the frame engages the carriage and prevents it from tilting on the guide member and with a transparent cover removeably mounted on the opening of the working chamber.

3,395,493
CUTTER FOR GLASS PIPE
George E. Bonin, Addison, N.Y., assignor to Corning Glass Works, Corning, N.Y., a corporation of New York
Filed Aug. 26, 1965, Ser. No. 482,851
3 Claims. (Cl. 51—90)

Cutting apparatus for cutting lengths of pipe in the field including a support frame having a vise assembly for gripping the pipe, a rotatable cutting assembly for circumferentially cutting the pipe, and an adjustable support for

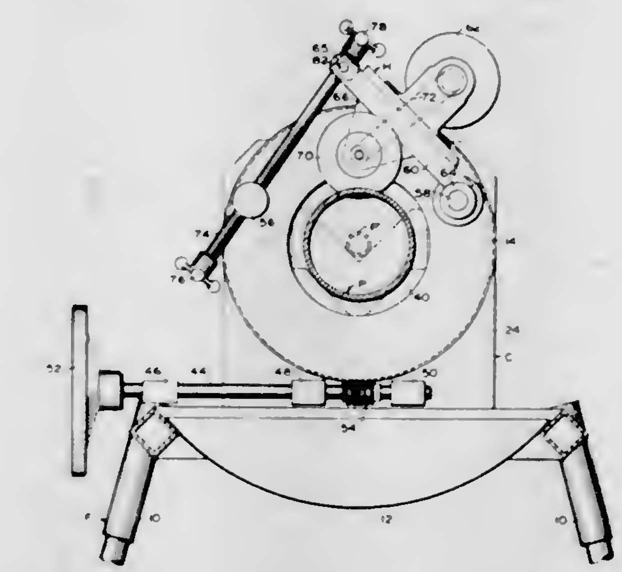

maintaining the pipe to be cut, all positioned in a predetermined axial alignment along the support frame.

3,395,494
LAPPING MACHINE
Leland T. Sogn, Kettering, Ohio (8700 Metcalf Ave., Apt. 101E, Overland Park, Kans. 66202)
Filed May 25, 1965, Ser. No. 458,646
22 Claims. (Cl. 51—161)

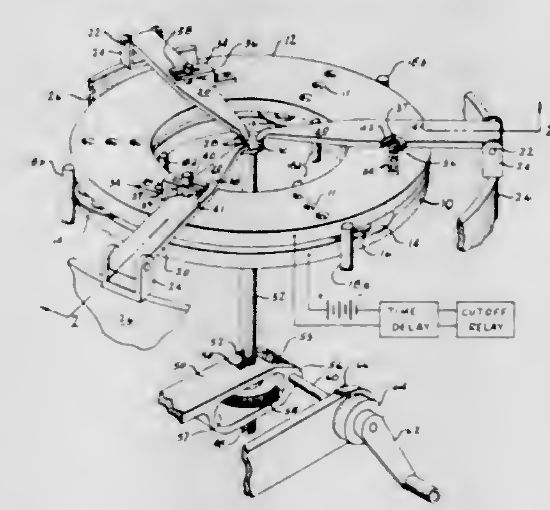

A lapping machine has drive means to orbit carriers for elements to be lapped between upper and lower lapping plates, the drive means contacting the carriers through free spinning parts so that the drive means does not restrict the natural tendency of the carriers to undergo a spin rotation about their own geometric axes in progressing through their orbital path. Lapping pressure is supplied by the weight of the upper lapping plate which rests upon the elements to be lapped and lapping thickness is controlled by limit devices which intercept downward movement of the upper lapping plate as the lapping progresses, whereby the support for the upper lapping plate is transferred from the elements being lapped to the limit devices. Plural limit devices which provide a stable three point support for the upper lapping plate at termination of the lapping operation are adjustable in unison by a single operating device to predetermine the thickness desired for the finally lapped elements. To assure uniform lapping of all elements, control circuit means responsive to contact between said limit devices and cooperating stop elements carried by said upper lapping plate terminate the lapping operation a predetermined time after first contact between any limit device and its cooperating stop member.

3,395,495
VEHICLE BODY SANDER
Stephen Powanda, Hyattsville, Md., assignor of ten percent to Herbert Siddley, District Heights, Md.
Filed Oct. 21, 1965, Ser. No. 499,889
10 Claims. (Cl. 51—170)

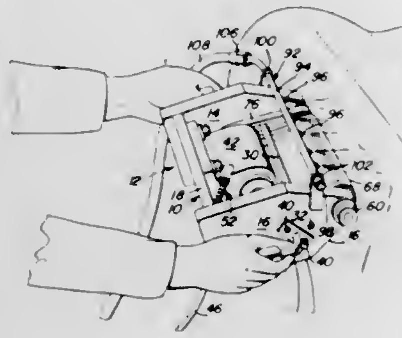

A sander including a generally U-shaped frame having side members journaling a cylindrical sanding wheel therebetween with the periphery of the sanding wheel projecting beyond the periphery of the side members. Handles are provided on the outer surface of the side members and a drive motor is provided between the side members of the frame. A spray pipe is disposed on the frame in parallel relation to the sanding wheel and sheets of sanding paper are detachably retained on the sanding wheel by employing a retaining bar disposed within a groove in the sanding wheel.

3,395,496
SPADE DRILL GRINDING FIXTURE
Allen N. Sweeny, Grosse Pointe, Mich., assignor to De Vlieg Machine Company, Royal Oak, Mich., a corporation of Michigan
Filed Dec. 30, 1964, Ser. No. 422,151
8 Claims. (Cl. 51—220)

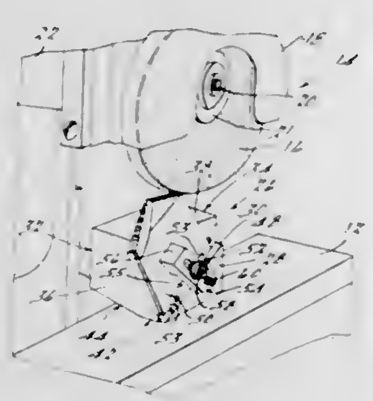

A grinding fixture of the tumble block type, to position and hold a spade drill in a plurality of positions on a table grinder or dress the various working surfaces of the spade drill, the primary and secondary relief surfaces and the chip-breaking grooves all being ground in a direction parallel to the surface of the table.

3,395,497
CUT-OFF FIXTURE
Zenon Romuald Mocarski, Shelton, Conn.
(1245 Kings Highway E., Fairfield, Conn. 06430)
Filed Mar. 7, 1966, Ser. No. 532,220
6 Claims. (Cl. 51—231)

A cut-off fixture for enabling workpieces of constant length to be cut from a piece of stock by the use of a cut-off saw blade in which the blade cuts its own stabilizing slot in the fixture and an adjustable, calibrated stop is provided which by adjustment enables the setting of the length between the slot and the stop for the workpieces

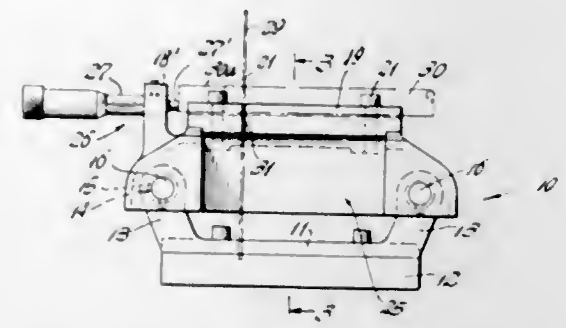

after accommodating for the difference between the length of a trial workpiece and the desired length of the workpieces.

3,395,498
METHOD OF MAKING LENSES FOR WIDE-ANGLE OCULARS
Harvey L. Ratliff, Jr., Oxon Hill, Md., assignor to Jetru Inc., Amarillo, Tex.
Original application Apr. 24, 1963, Ser. No. 275,411. Divided and this application Oct. 18, 1965, Ser. No. 505,117
2 Claims. (Cl. 51—284)

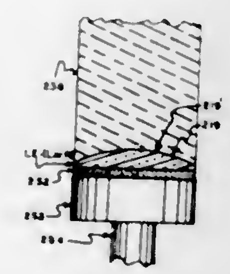

1. A process for making a stepped zone variable radii surface for a wide-angle aspherical lens which has a truncated peripheral extremity, has a second surface on the other side thereof, is made of refractive material having a greater refractive index than the surrounding media and is to be used in conjunction with a wide-angle, relatively flat object plane, comprising the steps of:

first making a spherical surface ΔS to have a radius of curvature R_1,

where:

$$R_1=\frac{(f_1)(r'')(n_1-n_2)}{r''+(f_1)(n_1-n_2)}$$

and F_1 is the distance from ΔS to ΔC, r'' is the radius of curvature of said second surface, n_1 is the refractive index of the lens material, n_2 is the refractive index of the surrounding media, ΔS is the central incremental portion of said variable radii surface, ΔC is the central incremental portion of said object plane, ΔS has its origin on the optical axis of said variable radii surface, the distance from the center of said variable radii surface to said origin being Y_1 and Y_1 equals R_1;

second making a multiplicity of spherical surfaces $\Delta S_1 \ldots {}_{n-2}$ to have respective radii of curvature $R_2 \ldots {}_{n-1}$ consecutively between ΔS and ΔS_{n-1}, beginning with ΔS_1 adjacent ΔS and ending with ΔS_{n-2},

where $\Delta S_1 \ldots {}_{n-2}$ are the multiplicity of individual respective incremental portions of said variable radii surface, each of $\Delta S_1 \ldots {}_{n-2}$ has its origin on the optical axis of and at a respective

distance of $Y_1 \ldots {}_{n-1}$ from the center of said variable radii surface, each of $Y_2 \ldots {}_{n-1}$ is respectively greater than $R_2 \ldots {}_{n-1}$, and:

$$R_2 \ldots {}_{n-1} \cong \frac{(f_2 \ldots {}_{n-1})(r'')(n_1-n_2)}{r''+(f_2 \ldots {}_{n-1})(n_1-n_2)}$$

if each of $R_2 \ldots {}_{n-1}$ and $f_2 \ldots {}_{n-1}$ correspond, $f_2 \ldots {}_{n-1}$ being the corresponding respective distance from $\Delta S_1 \ldots {}_{n-2}$ to $\Delta C_1 \ldots {}_{n-2}$;

third making the spherical surface ΔS_{n-1} to have a radius of curvature R_n,

where:

$$R_n=\frac{(f_n)(r'')(n_1-n_2)}{r''+(f_n)(n_1-n_2)}$$

and f_n is the distance from ΔS_{n-1} to ΔC_{n-1}, ΔS_{n-1} is the peripheral incremental portion of said variable radii surface, ΔC_{n-1} is the peripheral incremental portion of said object plane, ΔS_{n-1} has its origin on the optiual axis of and at a distance of Y_n from the center of said variable radii surface, and Y_n is substantially greater than R_n.

3,395,499
PENCIL POINT SHARPENING DEVICE
Alfred W. Vette, 111 Highland, Apt. 605, Highland Park, Mich. 48203
Filed Apr. 8, 1966, Ser. No. 541,171
4 Claims. (Cl. 51—371)

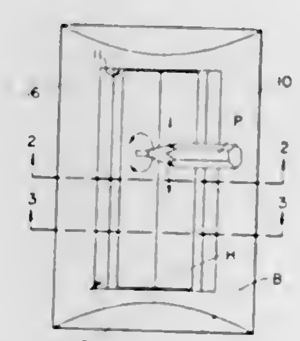

A pencil point sharpening device is disclosed comprising, in combination, a base and an abrasive sheet holder about which an abrasive sheet may be wrapped, said holder formed of sheet metal and being bent to form spaced apart yieldable portions defining a space therebetween, said base having a depression formed therein and an upstanding rib in said depression, said holder constructed to be pushed unto said rib to secure said holder in place on the base and to draw the abrasive sheet taut about said holder, said holder engageable with said rib via said yieldable portions so that said rib is disposed in the space between said yieldable portion and said holder disposed in said depression when in place on the base, said depression serving as a receptacle for particles shed from sharpening pencil points with said device, and means including an aperture in the base facilitating pushing said holder off said rib to remove said holder from its place on the base.

3,395,500
TREATMENT ROOM CONSTRUCTION FOR DENTAL OFFICES
Cannon Perry Smith, 1350 Gonzales Road, Oxnard, Calif. 93030
Filed Aug. 10, 1966, Ser. No. 571,584
8 Claims. (Cl. 52—29)

A dental office floor plan is provided including a revolving circular platform which supports patients seated in three dental chairs on various portions of the platform. Rotation of the platform brings the patients to the operative area so that only one operatory is needed rather than the usual three separate rooms for the patients. Suitable curtains or collapsible walls radially extend over portions of the circular platform and can be closed and opened to

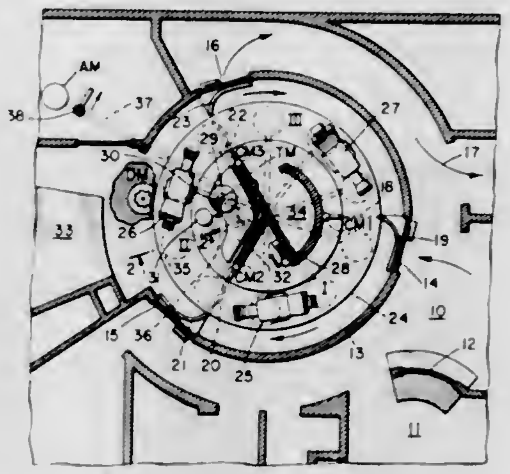

separate the three patients involved. The platform is rotated upon complete opening of the curtains to move a patient from one room to the other and after the platform has been rotated through the necessary arcuate distance, the curtains are closed.

3,395,501
HOIST TOWER
Frederic A. Davidson, Jr., New Rochelle, and Roger D. Schalge, Brooklyn, N.Y., assignors to Harsco Corporation, Harrisburg, Pa.
Filed Jan. 3, 1966, Ser. No. 518,052
2 Claims. (Cl. 52—30)

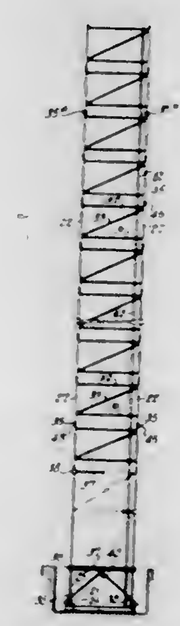

A hoist tower is built up of disconnectable frame units fitted together so as to form a substantially rigid structure; the units respectively comprising:

(1) triangular units having
   (a) legs tubular at opposite ends for reception of connecting sprockets,
   (b) rings with their axes parallel to the axes of said legs and spaced therefrom,
   (c) arms projecting to one side from said legs, the ends of said arms and said rings being joined together at the remote apices of the triangles, said rings being adapted to be aligned respectively with the tubular openings in the legs of adjacent units for insertion therethrough of
(2) sprockets to connect the vertical legs of the units respectively with the vertex rings of adjoining units
(3) side panels respectively comprising
   (a) vertical legs spaced apart,

(b) horizontal girts connecting the legs into a frame and
(c) diagonal braces secured between said girts and legs to give greater rigidity to the structure and
(d) said legs being hollow at their ends for receiving sprockets by which they are connected to adjoining units.

3,395,502
COMPRESSION MODULAR BUILDING
Christian Frey, 50 7th Ave., San Francisco, Calif. 94118
Filed May 17, 1965, Ser. No. 456,153
7 Claims. (Cl. 52—73)

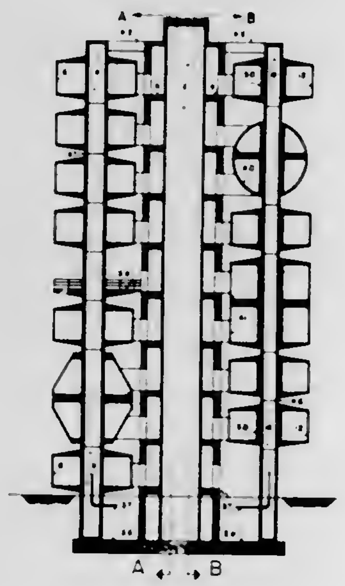

A compression modular building including a plurality of substantially identical prefabricated modular units which have floor, ceiling and wall portions integrally connected together and defining a three dimensional portion, the wall panels of which are connected to a tower supporting the modules in superposed relation. The tower is preferably formed of a plurality of load transmitting elements, each having a height equal to the height of one module, with these load transmitting elements of the tower increasing progressively in structural strength from the top of the column toward the bottom.

3,395,503
SPRING MOUNTED ADJUSTABLE BOOM CONSTRUCTION
Jesse J. Greenburg, 201 E. 5th St., and William R. Barrett, 211 N. Willow St., both of Solomon, Kans. 67480
Filed Jan. 13, 1967, Ser. No. 609,155
10 Claims. (Cl. 52—114)

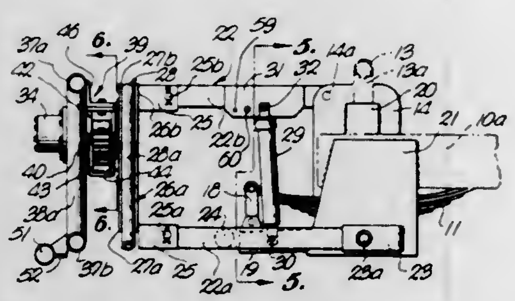

A field spraying boom having a spring mounted and supported center section with two end sections flexibly extending from the ends thereof. The mounting of the boom relative to a prime mover facilities the raising, lowering and angular adjustment of the boom and reduces extreme damaging vibrations during high speed operation over irregular terrain.

3,395,504
SOUND ABSORBING PANELS BETWEEN CEILINGS
Charles Zwickert, 108 bis, Rue Jean Jaures, Noisy-le-Sec, France
Filed July 25, 1966, Ser. No. 567, 779
Claims priority, application France, July 26, 1965, 26,003
9 Claims. (Cl. 52—144)

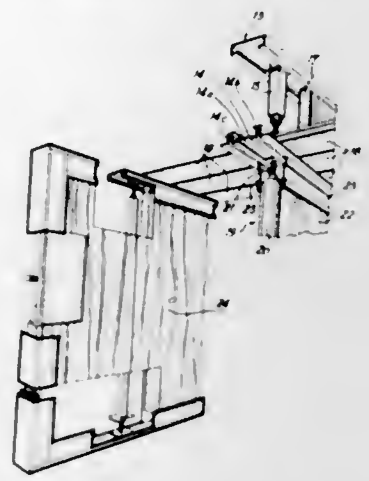

1. A hanging arrangement for false ceilings, comprising in combination: bearer section members fixed to a true ceiling, these section members having a downwardly opening longitudinal groove; supporting section members supporting the false ceiling, these section members having bearing surfaces for the false ceiling panels and an upwardly open longitudinal groove; suspension members suspending the support section members from the bearer section members, the said suspension members having an upper end retained in the groove of a bearer section member and a lower end being retained in the groove of a supporting section member, which is thus suspended from the bearer section member, and sound-absorbing panels mounted longitudinally between the bearer section members and the supporting section members, the upper and lower ends of these sound-absorbing panels engaged respectively in the grooves of the bearer section members and in the grooves of supporting section members.

3,395,505
CONNECTION ELEMENT FOR EXPANSION JOINTS
Jacques Edouard Lamy, Fontenay-aux-Roses, France, assignor to Societe d'Etude du Transport et de La Valorisation des Gaz Naturels du Sahara S.E.G.A.N.S., Paris, France, a French body corporate
Filed June 28, 1965, Ser. No. 467,560
Claims priority, application France, July 2, 1964, 980,432
8 Claims. (Cl. 52—276)

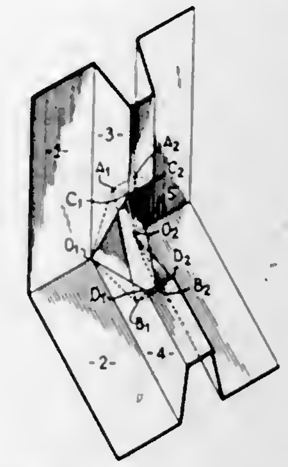

Connection element of two corrugations of a sheet metal expansion joint, provided at the angular intersection of two walls of a metal tank, the element having developable surfaces and being formed such that it al-

lows contraction and expansion of the joint either in a direction perpendicular to the intersection of the walls or in a direction tending to modify the angle of intersection of the walls.

3,395,506
LATH WALL CONSTRUCTION
David Petrig, Birmingham, Ala., assignor to Alabama Metal Industries Corporation, a corporation of Delaware
Filed Nov. 3, 1966, Ser. No. 591,793
8 Claims. (Cl. 52—349)

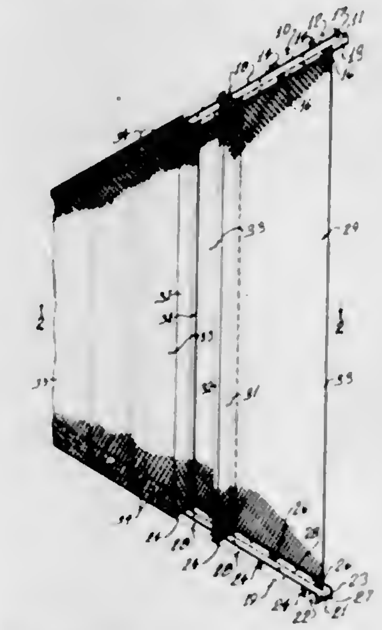

1. A lath wall construction comprising:
(a) an upper trackway having longitudinally extending depending flanges spaced from each other,
(b) downwardly opening, longitudinally spaced slots in said depending flanges with the slots in one of said depending flanges being in transverse alignment with the slots in the other depending flange,
(c) a lower trackway having longitudinally extending upstanding flanges spaced from each other,
(d) upwardly opening, longitudinally spaced slots in said upstanding flanges with the slots in one of said upstanding flanges being in transverse alignment with the slots in the other upstanding flange,
(e) said lower trackway being in vertical alignment with said upper trackway with said upwardly opening slots in said lower trackway being in vertical alignment with said downwardly opening slots in said upper trackway,
(f) a plurality of lath panels spanning the distance between said upper and lower trackways with each panel having a first panel section between and extending generally at right angles to other panel sections with said first panel section spanning and engaging upper and lower pairs of transversely aligned slots in said upper and lower trackways,
(g) said other panel sections of each panel being of a length to extend alongside said other panel sections of an adjacent panel, and
(h) means securing adjacent ones of said other panel sections to each other.

3,395,507
TILE CONSTRUCTION AND EXPANSION JOINT FOR USE THEREIN
Robert J. Moody, Martinez, Calif., assignor to Alves Tile Company, San Carlos, Calif., a corporation of California
Filed Aug. 23, 1965, Ser. No. 481,677
2 Claims. (Cl. 52—390)

An expansion joint for use in tile work being laid on a support surface and including a pair of spaced parallel elongate angle members having upwardly extending leg portions arranged to lie in spaced parallel planes, the

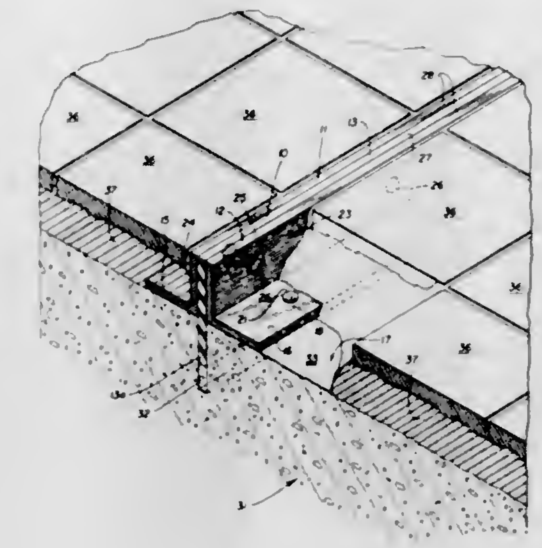

space being filled by a strip of flexible material. The strip of flexible material and angle members are interconnected together with rivets to form a unitary assembly.

3,395,508
SELF-INSULATING COVERING ELEMENT
Arthur A. Blau, Merrick, and Leo L. Schlackman, Huntington, N.Y., assignors to Extrudyne, Inc., Copiague, N.Y., a corporation of New York
Filed July 11, 1966, Ser. No. 564,296
5 Claims. (Cl. 52—530)

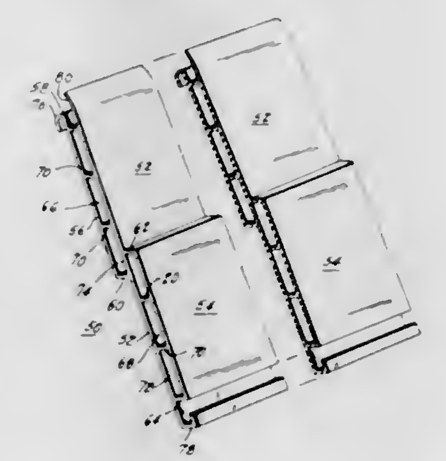

A double-walled insulating element which is self-insulating in nature in that an air pocket is defined between the individual walls thereof. The walls and the pocket define an excellent insulating system which may be utilized as siding, the slats of an awning, and indeed in any other environment. A preferred embodiment of the invention comprises two such double-walled elements including one wall of which is coextensive with both such element such that in reality the two elements are of unitary construction.

3,395,509
APPARATUS FOR PACKAGING CONTAINERS IN CONTAINER CARRIER
Gerald Erickson, Huntington, N.Y. (P.O. Box 687, Grand Central Post Office, Lexington Ave. at 45th St., New York, N.Y. 10017)
Filed Dec. 13, 1965, Ser. No. 513,375
5 Claims. (Cl. 53—48)

An apparatus for packaging containers having chimes at both ends between connected channeled elements which

engage the chimes of the containers in which the corners of the channeled elements are engaged and bent away from

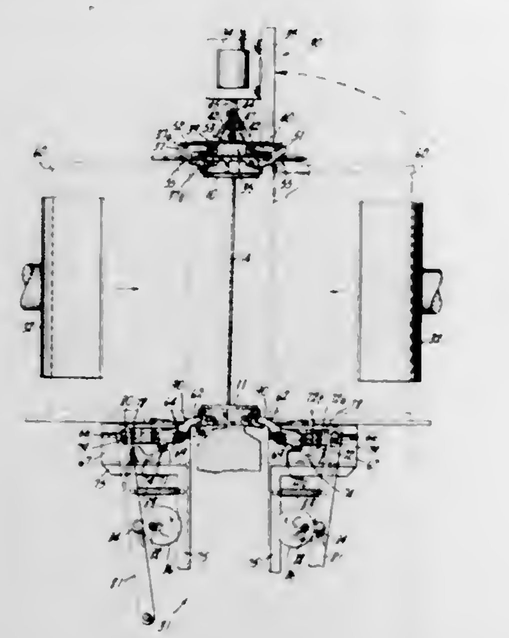

the ends of a container to be packaged to facilitate the introduction of the container between the channeled elements.

3,395,510
GAS SCRUBBER
Robert G. Barnes, Saratoga, Calif., assignor to General Electric Company, New York, N.Y., a corporation of New York
Filed Oct. 23, 1965, Ser. No. 503,961
9 Claims. (Cl. 55—20)

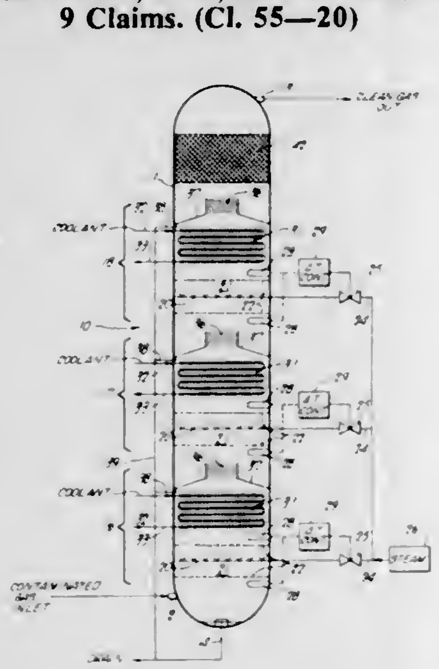

7. A method of removing particles from a gas, comprising the steps of:
measuring the temperature of the gas;
injecting steam into the gas;
measuring the temperature of the gas after the injection of steam whereby the difference in the temperature of the gas before and after the injection of steam is utilized to control the amount of steam injected into the gas;
cooling the gas to supersaturate it whereby some of the steam condenses in droplets around some of the particles which serve as condensation nuclei;
filtering the gas to remove the droplets and the particles entrained in the droplets;
measuring the temperature of the filtered gas;
injecting additional steam into the filtered gas;
measuring the temperature of the gas after the injection of additional steam whereby the difference in the temperature of the filtered gas before and after the injection of additional steam is utilized to control the amount of additional steam injected into the filtered gas;
cooling the filtered gas to supersaturate it whereby some of the steam condenses in droplets around at least some of the remaining particles in the filtered gas; and
re-filtering the filtered gas to remove the droplets and the particles entrained in the droplets.

3,395,511
METHOD AND MEANS FOR OBTAINING DRY GAS OR AIR
Iwan Ernst Roland Åkerman, Stockholm, Sweden, assignor to Atlas Copco Aktiebolag, Nacka, Sweden, a corporation of Sweden
Filed Sept. 25, 1964, Ser. No. 399,254
Claims priority, application Sweden, Oct. 3, 1963, 10,791/63
2 Claims. (Cl. 55—23)

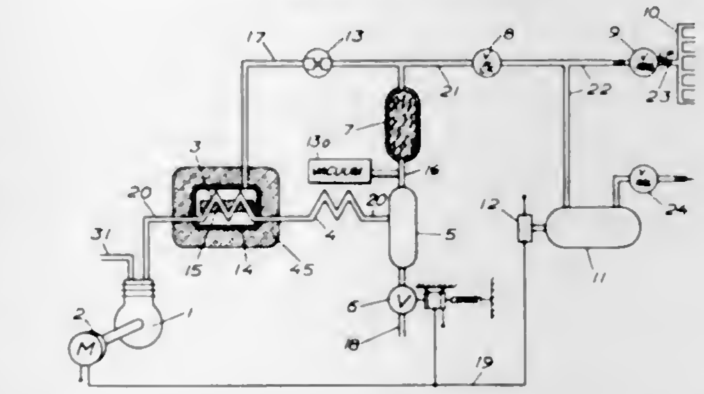

1. A method for obtaining extremely dry gas comprising; compressing moist gas in a compressor wherein heat is produced, cooling the compressed air, separating moisture mechanically from said compressed gas to produce relatively dry gas, conducting said relatively dry gas under pressure through a moisture adsorber in which moisture is separated from said relatively dry compressed gas to produce extremely dry gas for use by a consumer, conducting said extremely dry gas through a main line to a main receptacle, storing a part of said extremely dry compressed gas in said main receptacle, storing a predetermined amount of said compressed dry gas in an auxiliary receptacle branched off from the main line in continuous flow communication with said moisture adsorber through a flow restricting device, reducing the pressure of said predetermined amount of such stored extremely dry compressed gas to such a low pressure that said gas is capable of carrying several times the amount of moisture which would be carried by the compressed gas entering the moisture adsorber from the compressor, supplying said heat produced during compression of the gas in the compressor to said predetermined amount of dry gas by indirect heat exchange in said auxiliary receptacle, and conducting said predetermined amount of extremely dry low pressure and heated gas through said moisture adsorber to regenerate its moisture adsorbing ability.

3,395,512
METHOD AND MEANS FOR COOLING AND CLEANING HOT CONVERTER GASES
James A. Finney, Jr., Greenwich, Conn., and Richard Jablin, Bethlehem, Pa., assignors of one-half to Universal Oil Products Company, Des Plaines, Ill., a corporation of Delaware, and one-half to Bethlehem Steel Corporation, Bethlehem, Pa., a corporation of Delaware
Filed Mar. 21, 1966, Ser. No. 543,471
8 Claims. (Cl. 55—80)

System and method for cleaning and recovering heat from particle laden hot waste gases from a basic oxygen converter. The gases are passed serially through a refractory heat accumulator, a waste heat boiler, a bag filter means, fan and stack in that order, the cleaned gases then being discharged to atmosphere. Between converter blows outside air is drawn through the above apparatus in the

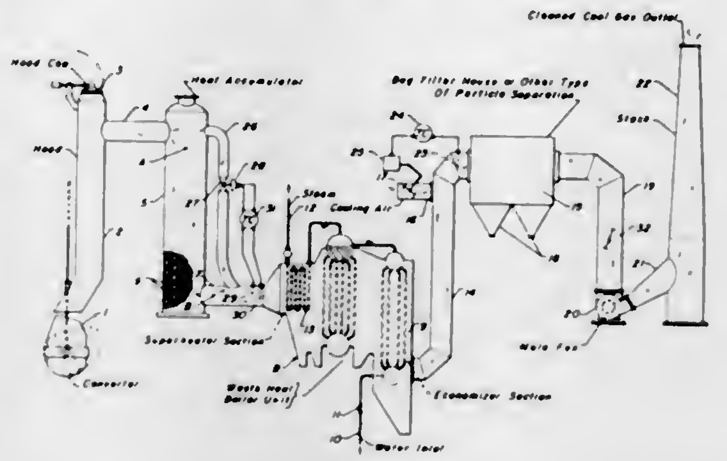

same flow direction whereby to maintain a sustained heat release in the waste heat boiler.

3,395,513
PROCESS AND DEVICE FOR THE TREATMENT OF GASES
Werner von Unwerth, Drususgasse 1–5, Cologne, Germany
Filed Sept. 28, 1964, Ser. No. 399,455
3 Claims. (Cl. 55—86)

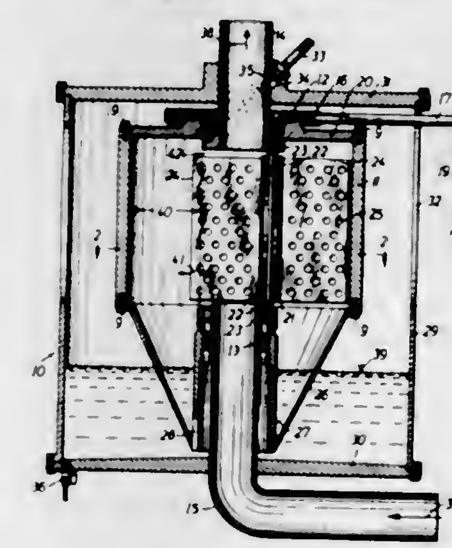

1. A process for the treatment of a gas to transfer substances in a gas to a liquid medium, which comprises:
(a) imparting a rotational movement to a liquid mass to form a ring of liquid having a space internally;
(b) passing said gas to be treated through said space internally of said ring;
(c) providing combing means including vanes having openings;
(d) combing said gas within said space in a direction transverse to the direction in which said gas is flowing, said combing being effected about an axis parallel to but eccentrically disposed with respect to the axis of said ring to thereby pass said combing means successively into and out of at least a substantial portion of the liquid of said ring; and,
(e) further effecting said combing by rotating said vanes whose terminal end portions are at all times immersed in said ring of liquid.

3,395,514
FILTER TESTING SYSTEM AND METHOD
Robert A. Bub, Gibsonia, Pa., assignor to Mine Safety Appliances Company, a corporation of Pennsylvania
Filed Oct. 27, 1965, Ser. No. 505,364
5 Claims. (Cl. 55—97)

A leak testing fluid is compelled to flow past a body of filtering material in a direction counter to the flow of the fluid being filtered by that material. As a result, if there are any leaks around the body of filtering material through which the filterable fluid can flow, it will

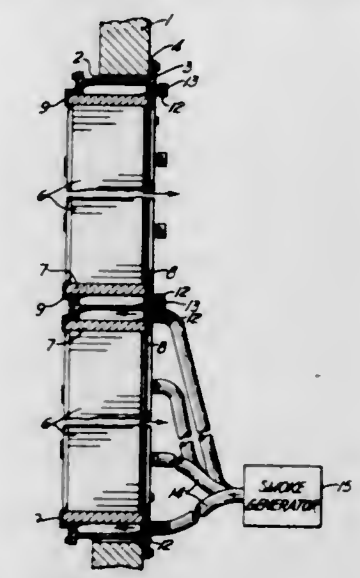

carry with it the leak testing fluid which then can be detected at the downstream end of the filter to show that leaks are present.

3,395,515
COOLING TOWERS
Alfred E. Murray, Leeds, England, assignor to William Stanley Lovely, London, England
Filed Mar. 15, 1965, Ser. No. 439,828
Claims priority, application Great Britain, Mar. 16, 1964, 10,940/64
7 Claims. (Cl. 55—257)

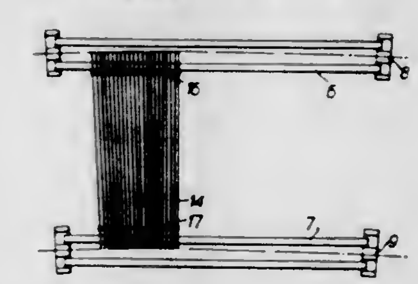

A cooling tower for cooling warm water by direct contact with air having a plurality of columns arranged in concentric circular rows with pairs of parallel beams extending between adjacent rows. Support brackets are mounted at each side of each column and tie means secure together the juxtaposed ends of the beams in any one of the brackets. Packing sheets are supported at their opposite ends upon the beams.

3,395,516
AIRBORNE AEROSOL COLLECTOR
Roger M. Schecter, Hillcrest Heights, and Robert G. Russ, Accokeek, Md., assignors to the United States of America as represented by the Secretary of the Navy
Filed Jan. 31, 1964, Ser. No. 341,812
1 Claim. (Cl. 55—270)

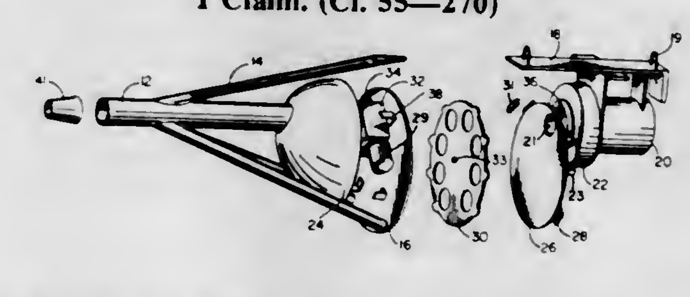

1. An aerosol collector device for collecting particulate matter in the atmosphere, which comprises:
a rotatable filter disc element,
a plurality of separate equally spaced filter elements included in said filter disc element and radially

aligned near the periphery of said rotatable filter disc element with their centers on a circle with the axis of said disc as their center,
drive means connected to said filter disc element for rotatably driving said filter disc element,
a cylindrical fluid inlet means for directing fluid to said filter disc element,
said fluid disc element being positioned relative to the outlet end of said fluid inlet means such that one of each of said separate filter elements is aligned coaxial with said inlet as said disc element is rotated relative to said inlet means,
control means connected with said filter disc drive means for rotating said filter disc element to position one of each of said filter elements in axial alignment with said inlet,
valve means for closing said inlet when a sample is not being taken and for opening said inlet when a sample is to be taken,
motor means connected with said valve means for opening and closing said valve,
fluid suction means including a motor, and a fan,
an inlet to said fluid suction means and an outlet from said fluid suction means,
said inlet to said fluid suction means being aligned with the outlet of said inlet means and on the opposite side of said filter from that of said inlet means in axial alignment with the outlet end of said inlet means,
means for adjusting the speed of the motor of said suction means to control fluid flow through said filter element in alignment therewith to establish a static condition between fluid flow through said collector device and that of the fluid flow surrounding said device,
fluid flow measuring means secured relative to said fluid inlet means to measure the fluid flow passing through said inlet means,
control means for controlling said motor to operate said valve,
said filter disc element including a plurality of cams on the periphery thereof one cam for each of said separate filter elements, and
control means associated with said cams to stop rotation of said filter disc after rotation sufficient for alignment of successive filter elements with the outlet end of said fluid inlet means.

3,395,517
DUST REMOVABLE DEVICE
Franz Lang, Schulstrasse 1, Lissberg, Germany, and Wilfried Sittner, Muhlstrasse 5, Merkenfritz, Germany
Filed Aug. 16, 1965, Ser. No. 493,294
7 Claims. (Cl. 55—285)

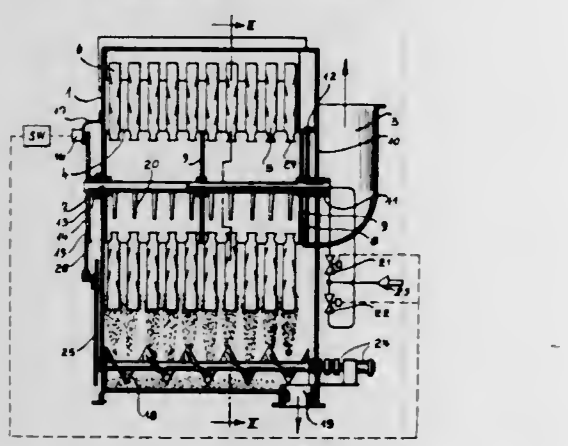

Dust filter arrangement in which nozzles clean line of filter elements while rotating through a certain angle and then are removed to the next line of filter elements to clean the same.

3,395,518
AIR FILTER WITH TRAVELING FILTER-MEDIUM SCREEN
Bronnie F. Krane, Hammond, Ind., assignor to United States Steel Corporation, a corporation of Delaware
Filed Dec. 28, 1966, Ser. No. 605,275
4 Claims. (Cl. 55—290)

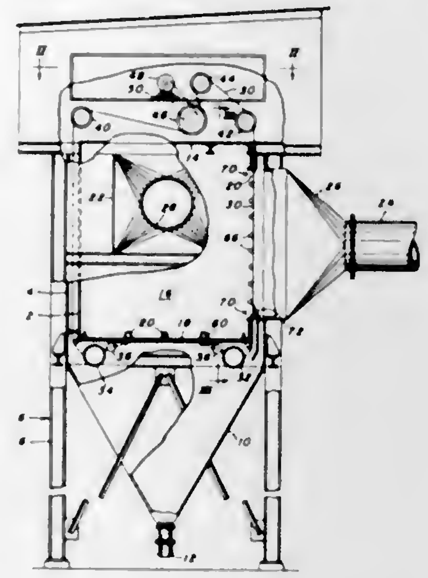

An air filter apparatus having a continuously traveling endless filter-medium belt entrained on pulleys around a chamber provided with an air inlet for the admission of dust-ladened air and an outlet for the passage of cleaned air. A housing having a hopper bottom and air inlet and outlet communicating with those of the chamber encloses the chamber in spaced relation thereto. One of the pulleys is driven to drive the belt downwardly across the chamber inlet and around the chamber. Means are provided in the housing below the inlets for removing dust from the belt into the hopper. These include a scraper blade disposed transversely of the belt; perforated pressure-air drums engaging the belt to blow air therethrough in the direction of the hopper; and a spring-mounted plate which forms the bottom of the chamber and has vibrators connected therewith for vibrating the plate against the belt as it passes above the hopper.

3,395,519
DUST SEPARATOR AND COLLECTOR
Arthur J. Kleissler, South Orange, N.J., assignor to G. A. Kleissler Company, Newark, N.J., a corporation of New Jersey
Filed Mar. 31, 1966, Ser. No. 539,012
1 Claim. (Cl. 55—304)

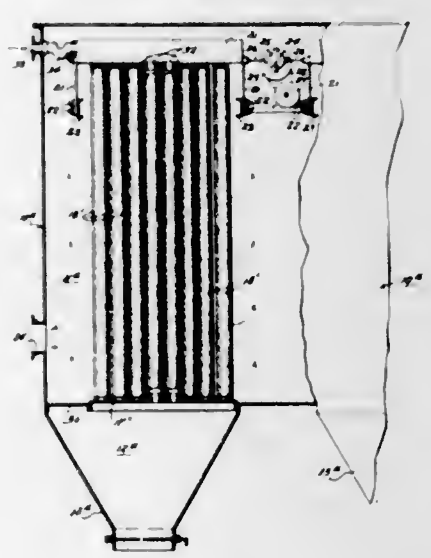

Industrial apparatus for separating dust from air or any other gas is described in which a plurality of elongated, vertically disposed, tubular fabric filter elements are suspended from an upper plate member mounted on the upper ends of a plurality of flat leaf springs the lower ends of which are fixedly mounted on the frame or body of the apparatus. Accumulated dust within the tubular filter elements is removed by shaking the filter elements by imparting back and forth reciprocal motion to the upper plate member; the leaf springs serving to support the weight of the upper plate member, the filter elements and accumulated dust and to permit such motion while limiting its extent and dampening vibration caused thereby.

3,395,520
TREE TOPPING MACHINE
Clyde O. Leydig and Melvin O. Langford, both of P.O. Box 272, Exeter, Calif. 93221
Filed Oct. 18, 1965, Ser. No. 496,779
7 Claims. (Cl. 56—235)

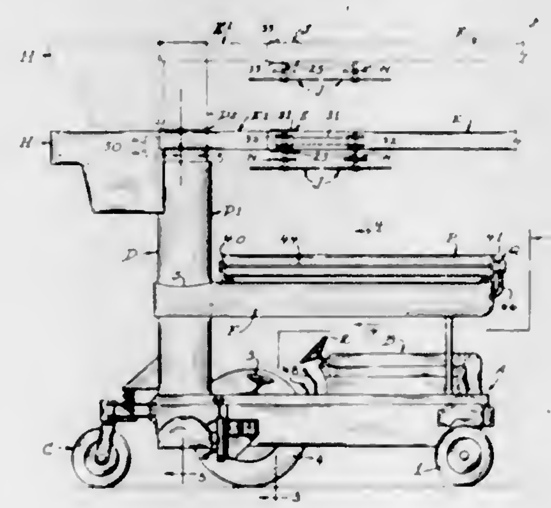

1. In a device of the type described:
(a) a vehicle;
(b) a tower supported by said vehicle;
(c) a main boom supported by said tower;
(d) disc saws rotatably carried by said boom and having their peripheral cutting edges lying in a plane substantially paralleling the ground surface over which the vehicle travels;
(e) means for swinging said boom to extend to one side of said vehicle for positioning its saws so that they will extend over an area that lies on one side of said vehicle;
(f) means for rotating said saws while moving the vehicle along a row of trees for topping them;
(g) a clean up boom pivotally supported by said main boom;
(h) disc saws rotatably carried by said clean up boom and having their peripheral cutting edges lying in a plane substantially paralleling the ground surface;
(i) means for swinging said clean up boom to extend to the opposite side of the vehicle from that occupied by said main boom for positioning its saws so that they will extend over another row of trees lying on said opposite side of the vehicle and substantially parallel to the first row of trees; and
(j) means for rotating the saws of said clean up boom for causing them to top the trees of the second row.

3,395,521
THATCH REMOVER ATTACHMENT FOR ROTARY LAWNMOWERS
Garold D. Crockett, 212 Parkway, and George A. Dalphond, 861 Plaza Drive, both of Salina, Kans. 67401
Filed June 23, 1965, Ser. No. 466,176
3 Claims. (Cl. 56—295)

A thatch remover attachment for a rotary lawn mower comprising a horizontal carrier bar adapted to be affixed at its midpoint to the vertical power shaft of the mower, in place of the usual blade bar, and a pair of rigid fingers

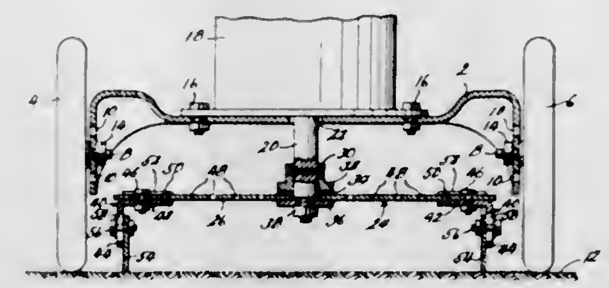

affixed to said carrier bar respectively at opposite sides of the axis of rotation of said carrier bar and depending therefrom substantially to ground level.

3,395,522
MOWING MACHINES
Petrus Wilhelmus Zweegers, Eindhovenscheweg 2, Geldrop, Netherlands
Filed July 6, 1965, Ser. No. 469,393
Claims priority, application Netherlands, July 11, 1964, 6407939; Oct. 9, 1964, 6411816
8 Claims. (Cl. 56—295)

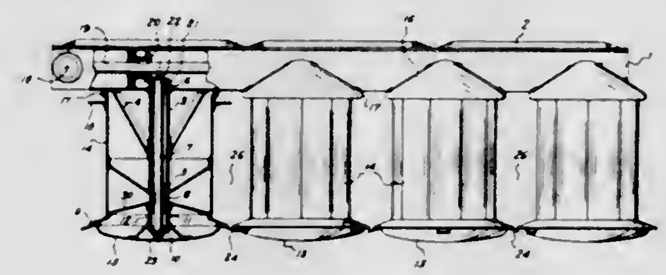

Mowing machine having at least one rotatable cutting device including a conical downwardly flaring flange, and at least one cutter mounted beneath the flange. A saucer-like ground engaging support is beneath each flange concentrically therewith, defining an annular slot between the lower flange surface and the peripheral edge of the support. Cutter protrudes through slot, but more than one-half of the cutter is arranged radially inwardly of the flange edge.

3,395,523
CITRUS FRUIT HARVESTER
Kermit H. Burgin, R.R. 1, Box 212, Whitestown, Boone County, Ind. 46075
Filed Apr. 10, 1967, Ser. No. 629,768
10 Claims. (Cl. 56—328)

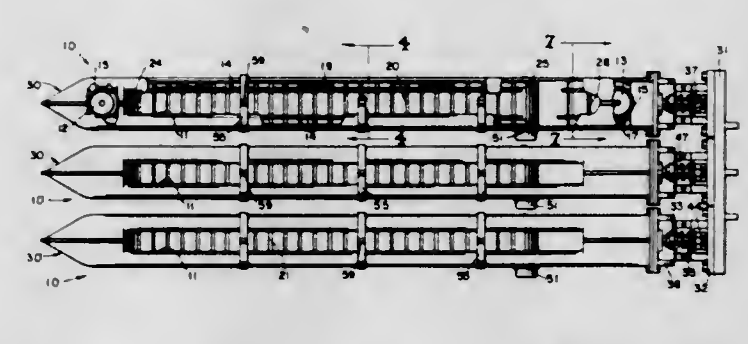

A fruit picker head wherein there is a trough open along the top; there is one or more belts with laterally spaced apart flights extending longitudinally along and within the trough to receive and spin fruit between the flights; a conveyor in the trough below the flights; and

means yieldingly permitting rocking of the trough vertically; and means rocking the trough transversely.

3,395,524
METHOD AND APPARATUS FOR THE PRODUCTION OF CRIMPED YARNS
Imre Balassa, Buhl, Baden, Germany, assignor to Zinser-Textilmaschinen Gesellschaft mit beschrankter Haftung, Ebersbach an der Fils, Germany, a German company
Filed July 28, 1966, Ser. No. 568,564
Claims priority, application Germany, July 28, 1965, B 83,006
18 Claims. (Cl. 57—34)

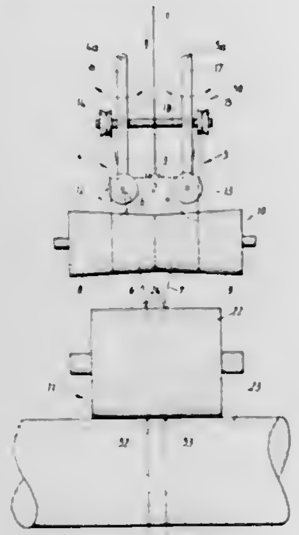

The production of crimped yarns in which at least two separate yarns are fed under tension to a common twisting zone wherein the yarns are twisted together. After a heat setting of the false twist produced, the yarns are separated and drawn off under tension with equal drawing off speeds. Each separated yarn runs through at least one extension zone wherein the tension of the yarns are so controlled within their elastic range that when a relative difference in length of the yarns occurs, the tension of the shorter yarn is increased and that of the longer yarn decreased.

3,395,525
METHOD AND APPARATUS FOR FRICTIONALLY FIBRILLATING FILMS
William R. Eddy, Kansas City, Kans., assignor to Phillips Petroleum Company, a corporation of Delaware
Filed Jan. 13, 1967, Ser. No. 609,207
12 Claims. (Cl. 57—34)
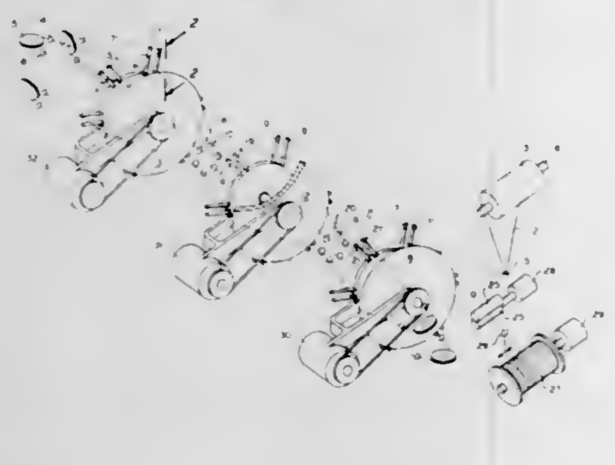
Method for fibrillating sheet material such as oriented thermoplastic or polyolefin by passing same in frictional engagement across edge of rotating fibrillating means. In one embodiment, several counter rotating fibrillating means are provided having between them means for guiding a web being fibrillated.

3,395,526
BOBBIN DRIVE GEAR FOR TEXTILE ROVING FRAME
Conrad B. Bookout, Charlotte, N.C., assignor to F. A. Young Machine Company, Inc., Gastonia, N.C., a corporation of North Carolina
Filed Mar. 24, 1967, Ser. No. 625,808
8 Claims. (Cl. 57—102)

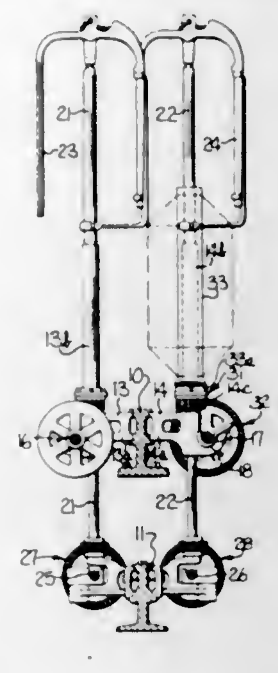

A bobbin drive gear train for a textile roving frame including a bobbin spur gear and an intermeshing drive shaft spiral face gear wherein the spur gear has a plurality of bobbin-engaging projections which are formed integral with the gear to minimize the cost of manufacture thereof, and to provide increased bobbin stability resulting in improved package formation and less variation in the size of the roving being wound; and wherein the vertical length of the bobbin spur gear teeth initially extend a substantial distance above the spiral face gear teeth to insure proper intermesh of the gears during downward displacement of the spur gear caused by wear, thereby prolonging the effective life thereof.

3,395,527
YARN AND FABRIC MADE THEREFROM
Harold Longley, Cleckheaton, England, assignor to Scandura Incorporated, Portland, Maine, a corporation of Maine
Filed June 21, 1965, Ser. No. 465,616
Claims priority, application Great Britain, June 23, 1964, 25,873/64
14 Claims. (Cl. 57—140)

A composite yarn having a fibrous asbestos strand intertwisted with a short staple glass fibre strand in such a manner that the predominant surface texture of the composite is provided by the glass fibre strand and is fluffy.

3,395,528
STAINLESS STEEL WIRE PRODUCTS AND METHOD OF MAKING THE SAME
Wilbert A. Lucht, Orange, Conn., assignor to United States Steel Corporation, a corporation of Delaware
No Drawing. Filed Feb. 11, 1966, Ser. No. 533,116
6 Claims. (Cl. 57—145)

A method of making stainless steel wire in which a hot rolled rod of astenitic stainless steel having a specific composition is cold drawn to reduce its area between 30

and 75% after which it is stress relieved at a temperature between 850 and 1200° F. A second cold drawing step reduces its cross sectional area at least 40% with the total reduction being at least 85% of the cross sectional area of the hot rolled rod. The product may then be stress relieved at a temperature between 850 and 1200° F. The stainless steel wire so produced has a minimum tensile strength of 300,000 lbs. per sq. in. and is capable of withstanding at least 25 twists in a length of wire 100 times its diameter.

3,395,529
REINFORCEMENT CORD AND METHOD OF MAKING SAME
Daniel D. Ray, Kent, Ohio, assignor to The Goodyear Tire & Rubber Company, Akron, Ohio, a corporation of Ohio
Filed Apr. 1, 1964, Ser. No. 356,620
13 Claims. (Cl. 57—153)

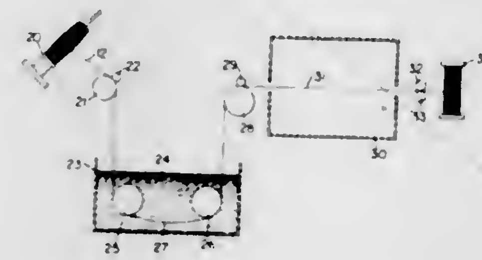

3. The method of making a glass filament reinforcement cord for an elastomeric article comprising: spreading apart the filaments of a yarn having a multiplicity of glass filaments; applying adhesive to encase individually substantially all of the filaments with an adhesive coating while they are in a spread apart condition; said spreading and said applying subjecting the filaments to disalignment; subjecting the so-coated filaments to tension while the adhesive thereon is under the influence of heat and softened so that the filaments are realigned and associated with one another in a more efficient lay to increase the ultimate strength of the cord; and plying together a plurality of said yarns to form said reinforcement cord.

13. A reinforcement cord made in accordance with the method of claim 3.

3,395,530
ROPES, STRANDS AND CORES
Robert Edward Campbell, Doncaster, England, assignor to British Ropes Limited, Doncaster, England, a British company
Filed Aug. 9, 1965, Ser. No. 478,063
Claims priority, application Great Britain, Aug. 20, 1964, 34,039/64
10 Claims. (Cl. 57—153)

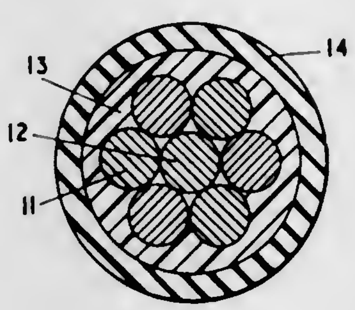

A method of forming a rope for use in environmental conditions which cause rotting including the steps of dispersing an anti-fouling agent into an elastomeric medium and then applying said medium as a coating to a preformed rope.

3,395,531
WATCH CASE
Pierre Caprara, 28 Rue des Alpes, Granges, Switzerland
Filed July 7, 1966, Ser. No. 563,439
Claims priority, application Switzerland, July 9, 1965, 9,645/65
6 Claims. (Cl. 58—90)

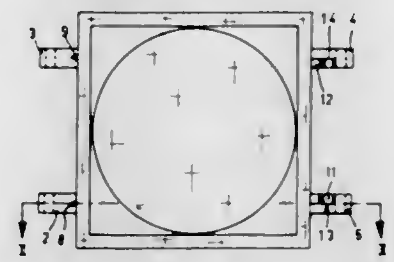

1. Watch case comprising a middle bezel provided with two first horns on one side and two second horns on the other side, and a back fixed to the middle bezel, characterized by the fact that the back is fixed on the one side to the middle bezel by projections rigid with the back and engaging in grooves formed in the corresponding first horns, and on the other side by a locking device cooperating with each of the corresponding second horns.

3,395,532
TIME PIECE HAIRSPRING END FASTENING MEANS
Jean-Claude Schneider, Neuchatel, Switzerland, assignor to Fabrique d'Horlogerie Chs. Tissot et Fils S.A., Le Locle, Neuchatel, Switzerland, a limited company of Switzerland
Filed Sept. 12, 1966, Ser. No. 578,851
Claims priority, application Switzerland, Sept. 24, 1965, 13,244/65
10 Claims. (Cl. 58—115)

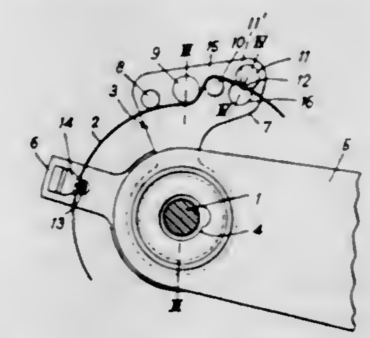

1. In a time piece movement comprising a hairspring wound in the form of a ribbon about an axis, an attachment means securing the free outer end of said spring, said means comprising: a plurality of bearing surfaces extending parallel to said axis, said surfaces being arranged so as to define a substantially sinusoidal path, said spring outer end extending along said path with said spring outer end being flexibly bent in conformity with said surfaces.

3,395,533
PENDULUM CLOCK MECHANISM
Gregory R. Campbell, 1901 Heliotrope Drive, Santa Ana, Calif. 92706
Filed Dec. 20, 1966, Ser. No. 603,313
8 Claims. (Cl. 58—129)

1. Spring compensated means for use in a pendulum clock mechanism comprising in combination, an escapement fork assembly comprising a shaft for pivotal movement about a given axis and an escapement member fixed to said shaft and having oppositely disposed end portions, an escapement wheel having a serrated marginal edge and being disposed for engagement alternately by the opposite end portions of said escapement member to effect corresponding timed movement of said wheel, a pendulum rod fixed to said shaft to form a unitary struc-

ture therewith to control rotation of said shaft about said given axis and having a pendulum bob at its lower end, and spring means comprising an elongated spring member having opposite ends anchored relative to said

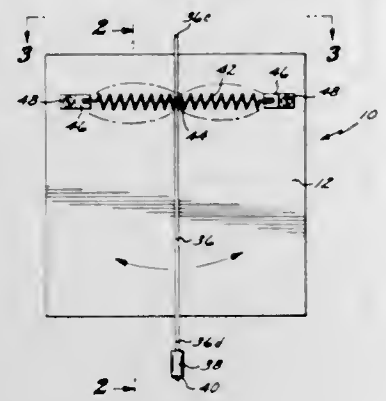

unitary structure and an intermediate portion fixed thereto, whereby reverse pivotal movement of said pendulum rod is damped by said spring as it effects corresponding pivotal movement of said escapement shaft.

3,395,534
SPEED RESPONSIVE AND CONTROL SYSTEMS FOR ROTORS
Louis L. Owen, Cincinnati, Ohio, assignor to General Electric Company, a corporation of New York
Filed June 29, 1966, Ser. No. 561,483
9 Claims. (Cl. 60—39.29)

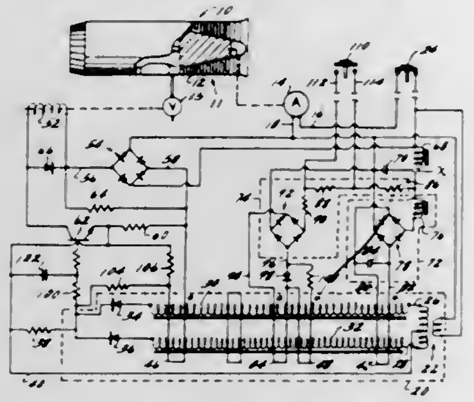

A speed-responsive control system comprises means for generating a speed signal which increases in frequency and magnitude with the speed of the rotor. First and second signals are generated from the speed signal which respectively have different rates of variation relative to the speed signal. A predetermined relationship between the two signals indicates a maximum limit speed. When the limit speed is reached, the speed of the rotor is automatically reduced to a predetermined lower value. Means are provided for testing the system with the rotor at a speed lower than the limit speed.

3,395,535
PNEUMATIC-HYDRAULIC TREAD BRAKE UNIT
Robert B. Morris, Irwin, Pa., assignor to Westinghouse Air Brake Company, Wilmerding, Pa., a corporation of Pennsylvania
Filed June 27, 1966, Ser. No. 560,559
3 Claims. (Cl. 60—54.5)

A tread brake unit for a railway car wheel, comprising a brake shoe movably carried on a casing and actuated to apply braking force to the wheel by a hydraulic pressure actuated piston, the hydraulic pressure being developed responsive to displacement of a plunger into a hydraulic pressure chamber at one side of the piston by a second piston subject to compressed air pressure. A sump reservoir containing hydraulic fluid subject to the pressure of the compressed air supplies hydraulic fluid to the hydraulic chamber past a loaded check valve to automatically compensate for wear on the brake shoe,

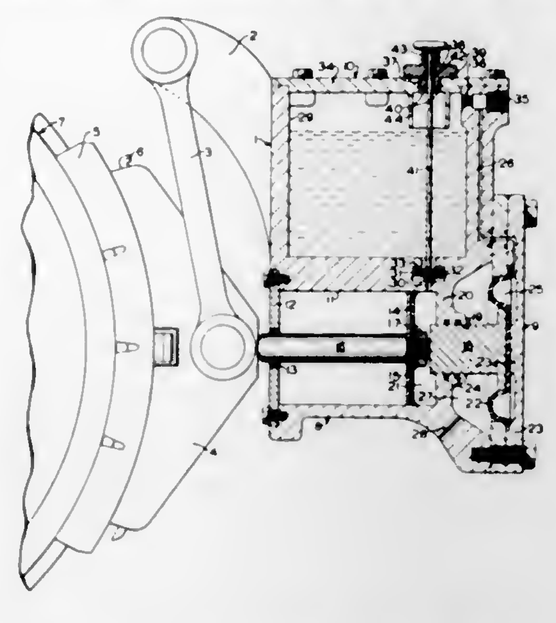

upon withdrawal of the plunger upon relief of the compressed air pressure on the second piston.

3,395,536
METHOD OF AND APPARATUS FOR TRANSMITTING ENERGY BY PRESSURE OSCILLATIONS IN A FLUID
Keith Foster, Birmingham, England, assignor to National Research Development Corporation, London, England
Filed Oct. 11, 1965, Ser. No. 494,502
Claims priority, application Great Britain, Oct. 13, 1964, 41,799/64
1 Claim. (Cl. 60—54.5)

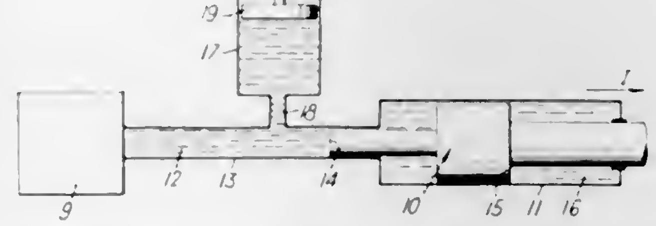

In the transmission of energy by fluid pressure oscillations the volume of a reservoir chamber in communication with a supply conduit connected to a fluid pressure transducer is selected or adjusted so that the fluid pressure oscillations are in phase with the mechanical oscillations and the system thereby effectively "matched."

3,395,537
PROPORTIONING VALVE
William Stelzer, Bloomfield Hills, Mich., assignor to Kelsey-Hayes Company, a corporation of Delaware
Filed Nov. 18, 1966, Ser. No. 595,486
9 Claims. (Cl. 60—54.5)

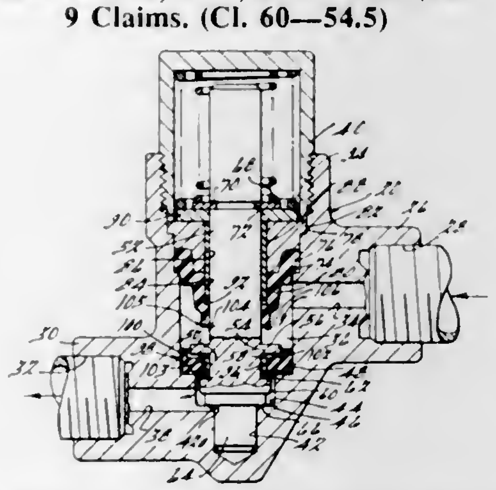

A brake pressure proportioning valve is adapted to modulate the fluid pressure at one or more brake cylin-

ders with respect to the fluid pressure generated by a fluid motor.

3,395,538
GAS TURBINE ENGINE AFTERBURNER FUEL CONTROL AND IGNITION
Ronald F. Borel, Cincinnati, and Edmund S. Lee III, Terrace Park, Ohio, assignors to General Electric Company a corporation of New York
Filed Dec 22, 1966, Ser. No. 604,032
11 Claims. (Cl. 60—243)

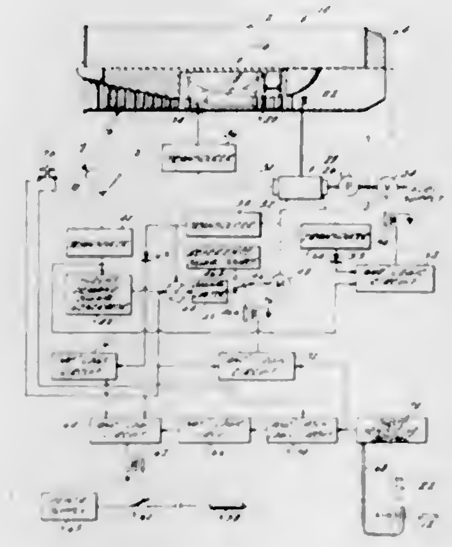

The present invention relates to improved means for controlling the flow to and the ignition of fuel in afterburners of gas turbine engines so as to initiate afterburner operation at a low level of combustion and thereby minimize abrupt thrust and pressure increases.

3,395,539
COMBINED TURBO-JET AND RAM-JET ENGINE WITH INJECTION OF OXYGEN
Albert Gozlan, Asnieres, France, assignor to Nord-Aviation Societe Nationale de Constructions Aeronautiques, Paris, France, a joint-stock company of France
Filed July 25, 1966, Ser. No. 567,432
Claims priority, application France, July 29, 1965, 26,562
6 Claims. (Cl. 60—244)

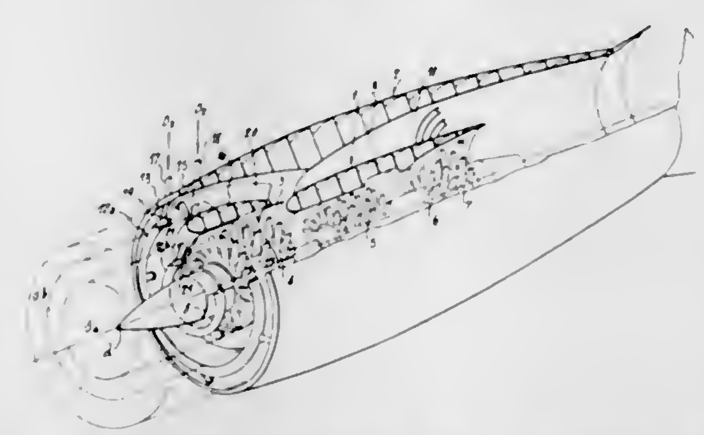

A combination turbo-ram-jet unit of the coaxial double flux type having means associated with it for supplying liquid or gaseous oxygen or other combustion-supporting fuel to one and/or the other flux corresponding on the one hand to the turbo-jet and on the other to the ram-jet to augment the thrust by increasing the possible flow-rate of oxygen or combustion supporting fluid and in addition to effect a cooling action on certain parts of the turbo-ram-jet engine through heat exchange of the flowing oxygen or combustion-supporting fluid. The means for supplying the oxygen are constituted by tubular racks concentric with the axis of the turbo-ram-jet arranged at the air intake of the propulsion unit of the path of the fluxes passing through the turbo-jet and ram-jet.

3,395,540
DRAINAGE TILE
Paul C. Deters, 841 E. 3rd St., Ottawa, Ohio 45875
Original application Apr. 29, 1963, Ser. No. 276,395. Divided and this application July 9, 1965, Ser. No. 470,705
4 Claims. (Cl. 61—11)

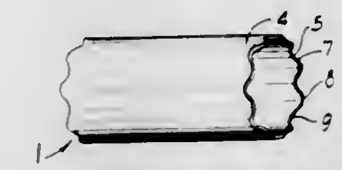

An extruded tubular clay tile having two undulated ends, each of which has alternate smoothly connected lands and recesses extending entirely around the end and having pairs of similar lands and recesses aligned on chords of the circles of the ends, respectively.

3,395,541
SHUT-OFF PLATES FOR CONTROLLING THE FLOW OF LIQUIDS
Paul Schramm, Joachim Schneider, and Josef Heidler, Michelbach, Nassau, Germany; said Schramm and said Heidler assignors to Passavant-Werke, Michelbach, Nassau, Germany
Filed Oct. 3, 1963, Ser. No. 314,589
Claims priority, application Germany, Oct. 5, 1962, P 30,306
5 Claims. (Cl. 61—28)

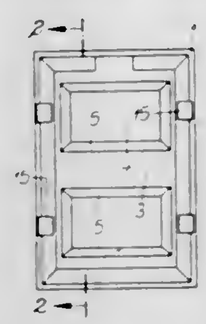

A pressure plate of cast iron for water gates includes a planar outer frame portion and an inner portion. The latter defines open recesses and intervening plateau areas, the recesses being in the shape of an inverted frustum of a pyramid and their open side co-extensive with the rectangular base of the aforementioned frustum of a pyramid.

3,395,542
PROPPING FRAME FOR MINING GALLERIES
Léon Eloi Deloffre, Bethune, France, assignor to Forges et Ateliers de la Nave, Bethune, France, and Etudes et Recherches Industrielles et Scientifiques E.R.I.S., Armentieres, France, both companies of France
Filed Mar. 2, 1966, Ser. No. 531,236
Claims priority, application France, Mar. 4, 1965, 7,942
5 Claims. (Cl. 61—45)

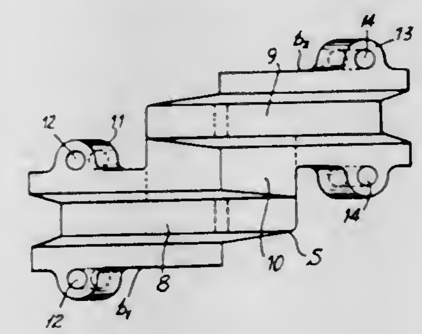

A propping frame for mine galleries having two uprights slidably interconnected by two arms of a head-

piece; the arms themselves are slidably clamped to two branches of a shoe; the branches are joined such as to form a pointed arch and are offset with respect to one another to permit the arms to assume an overlapping position.

3,395,543
METHOD FOR DRIVING THIN WALL PIPE PILES
Fredric Rusche, 8125 Medina St., Detroit, Mich. 48217
Filed July 7, 1967, Ser. No. 651,901
7 Claims. (Cl. 61—53.7)

This method is applicable for driving thin wall pipe pile where a hard bearing strata is overlaid by drillable strata. A hole is first drilled down to the bearing strata through the overlying strata, utilizing drilling mud which is left in the hole. A driving point is tightly installed on a thin wall pipe, and the latter is driven down the hole by impacts on its top until the point reaches the bearing strata. Then a mandrel of heavy steel tubing is loosely installed in the pipe, the lower end of the mandrel bearing upon the driving point and the upper end of the mandrel having a driving ring which engages the top of the pipe. The point is driven into the bearing strata by hammer blows on the mandrel, most of the driving energy being imparted to the point so that the latter pulls the pipe down with it, the elastic shortening of the mandrel under driving being less than that of the pipe. After the point has been driven home, the mandrel is removed and the pipe filled with concrete.

3,395,544
BLOCK FOR BRACING SHIPS IN DRYDOCK
James O. Fisher, Sr., Charles E. Biddle, Sr., and Harold L. Feiock, all of 1313 W. Burnside St., Portland, Oreg. 97209
Filed July 29, 1966, Ser. No. 568,808
3 Claims. (Cl. 61—66)

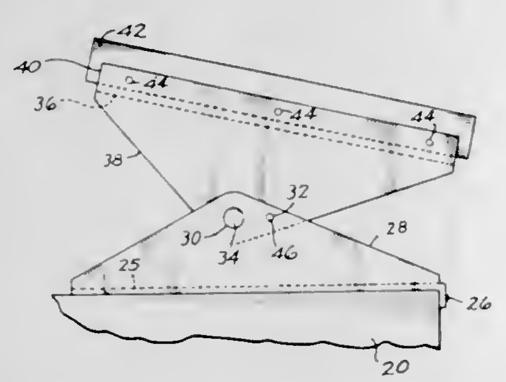

The lapped flanges of a base member and hull contact member are connected together by a pivot pin and a shear pin. The base member is adapted to be secured to a support block and the hull contact member supports a crush plate. The shear pin is adapted to shear under the weight of a ship, to allow the hull contact member to pivot to the plane of the ship's hull.

3,395,545
CABLE-LAYING APPARATUS
Alexander Mendaloff, Jr., 334 S. Race St., Statesville, N.C. 28677
Filed Feb. 15, 1966, Ser. No. 527,678
10 Claims. (Cl. 61—72.6)

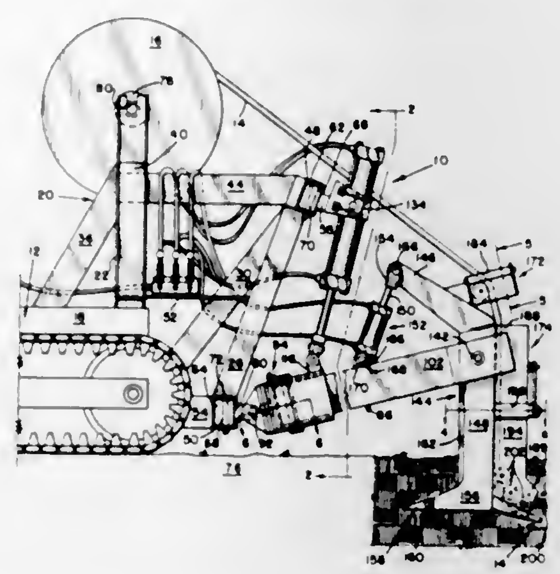

Apparatus for opening the ground and burying or installing telephone or other electrical cables, plastic water lines, conduits and like materials for attachment to a tractor or a self-powered vehicle having a slidably and pivotally movable plow shank cooperating with the frame and cable supply to lay cable and the like several feet below the surface of the earth.

3,395,546
PROCESS FOR MAKING SEMISOLID CRYOGENS
Harrison Bentley Sherlock and Newman E. Stanley, St. Louis County, Mo., assignors to McDonnell Aircraft Corporation, St. Louis County, Mo., a corporation of Maryland
Filed July 31, 1964, Ser. No. 386,618
11 Claims. (Cl. 62—10)

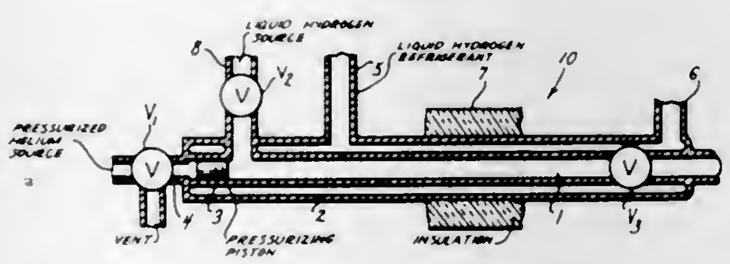

1. A method of making semi-solid refrigerant without a vacuum comprising the steps of isentropically compressing a liquid refrigerant from an initial to a higher pressure, both pressures within the range from atmospheric to 5000 p.s.i., cooling the compressed liquid refrigerant at substantially constant pressure to a point having an entropy less then the triple point entropy by transfer of the heat of compression to a boiling liquid body of the refrigerant, allowing the compressed and cooled liquid refrigerant to freeze, and isentropically expanding the frozen refrigerant to the initial pressure thereby permitting part of the frozen refrigerant to melt.

3,395,547
FRACTIONAL CRYSTALLIZATION SYSTEM
Frederick L. Stoller, Bartlesville, Okla., assignor to Phillips Petroleum Company, a corporation of Delaware
Filed June 28, 1962, Ser. No. 206,032
8 Claims. (Cl. 62—58)

In a fractional crystallization system comprising a column having a feed inlet, a filter, a reflux zone, a

melting zone, and a mother liquor withdrawal conduit connected to the filter, a first series of pressure pulses is applied to the liquid contents of the column by means other than through the liquid contents of the mother liquor withdrawal conduit while a second series of pressure pulses is applied directly to the liquid contents of

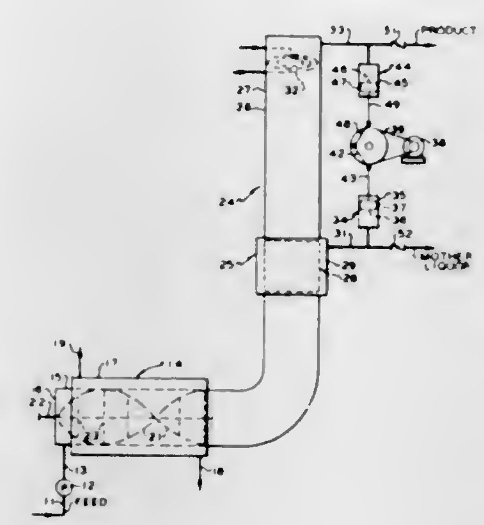

the mother liquor withdrawal conduit, the first and second series of pulses having a frequency in the range of 50 to 400 pulsations per minute and having a phase relationship to increase the pressure drop across the filter. The first and second series are preferably 180° out of phase with respect to each other.

3,395,548
VESSEL FOR TRANSPORTING LIQUEFIED GAS AT ABOUT AMBIENT PRESSURE
Donald R. Yearwood, Parlin, N.J., assignor to John J. McMullen, Montclair, N.J.
Filed Nov. 7, 1966, Ser. No. 592,643
7 Claims. (Cl. 62—45)

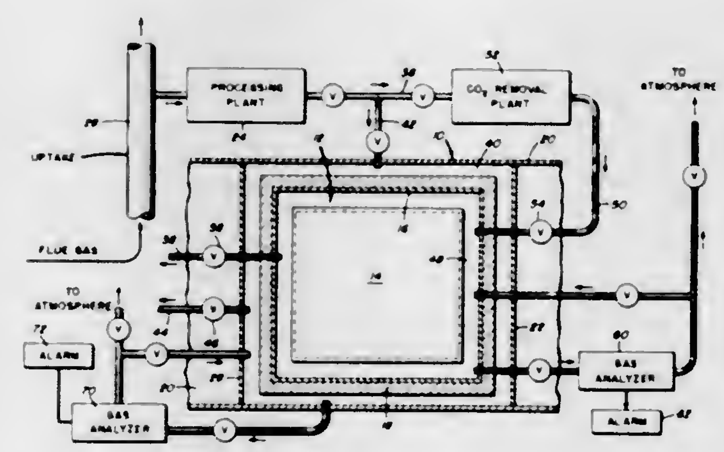

A vessel comprising a hull, a cargo tank mounted within the hull for carrying liquefied gas cargo at about ambient pressure, said tank including an inner tank for housing the liquid cargo and an outer tank having inner surfaces spaced from said inner tank to form an outer tank space therebetween, a source of flue gas and processing means for providing said outer tank space with purified flue gas which is substantially free of carbon dioxide. For further protection, flue gas fills the void space about the outside of the tank and within the ship's hull but the flue gas in the void space contains carbon dioxide. The pressure in the outer tank is maintained greater than the pressure in the void space and gas analyzers detect changes in the gas content in the outer tank and void space and actuate leak indicators in the event cargo gas is detected in the outer tank or the carbon dioxide p.p.m. decreases in the void space flue gas.

3,395,549
PROCESS AND APPARATUS FOR QUICK FREEZING OF FOOD BODIES
Eldon L. Grimes, Seattle, Wash., assignor to Marine Construction & Design Co., Seattle, Wash., a corporation of Washington
Filed Nov. 16, 1966, Ser. No. 594,711
11 Claims. (Cl. 62—63)

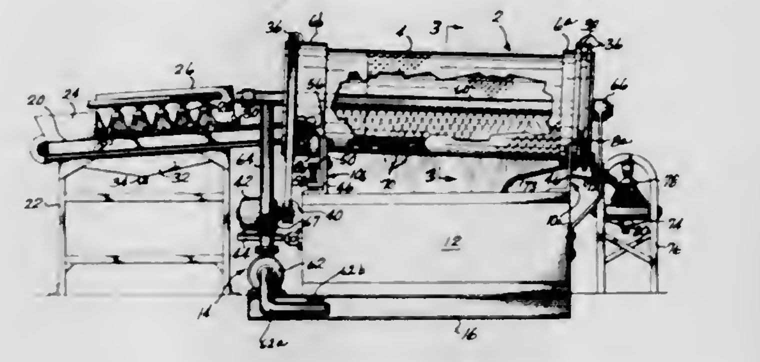

Shrimp or other food bodies to be frozen are immersed in a shallow bath of chilled liquid coolant confined in the lower peripheral portion of a revolving drum. The drum is inclined at a small angle to the horizontal to effect gravity flow of the shrimp progressively from one end to the other. A spiral feed element mounted on the drum's interior wall assures more positively controlled advance of the shrimp along the drum in shipboard applications wherein inclination of the drum may vary with motion of the vessel. The drum wall has a large number of drain openings for continuous rapid discharge of coolant from the bath at locations distributed throughout the extent thereof. Coolant draining from the drum and rechilled to predetermined temperature is jetted forcibly against the surface of the bath at a large number of locations distributed over the area thereof. Total flow from the jets is adequate to maintain the level of coolant in the drum slightly greater than that necessary to immerse the shrimp. The force of such jets causes resubmersion of surfacing shrimp, helps insure generally uniform leveling or distribution of shrimp throughout the bath, and produces vigorous continuous flow of coolant past the shrimp. A processing environment is created in which the shrimp are uniformly frozen in a minimum time period so as to permit achieving maximum production rates in a continuous flow system.

3,395,550
COMPARTMENTED ICE CHEST
Straughter H. Dungan, P.O. Box 135, Choctaw, Ala. 36905
Filed Jan. 26, 1967, Ser. No. 611,883
2 Claims. (Cl. 62—400)

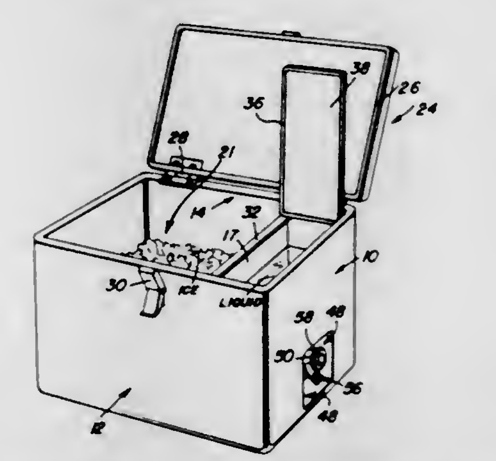

A portable compartmental container for outdoor use while fishing, at the beach or picnic ground. Suitable for transportation in trunk of user's car. Has two tightly closable compartments; a main compartment for ice,

fish or the like, and a smaller auxiliary compartment for drinking water. This latter compartment is provided with a dispensing spigot.

3,395,551
PUSH-PULL CABLE CASINGS
John F. Morse, 21 Clinton St., Hudson, Ohio 44236
Original application Oct. 2, 1962, Ser. No. 227,889, now Patent No. 3,320,665, dated May 23, 1967. Divided and this application Dec. 6, 1966, Ser. No. 620,197
5 Claims. (Cl. 64—3)

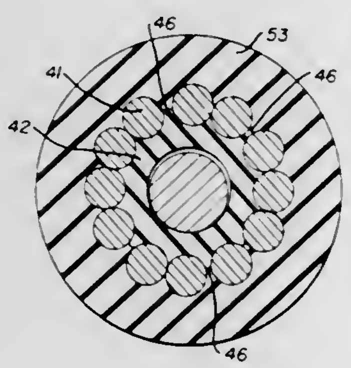

A casing for push-pull control cables in which a plurality of casing wires are laid side by side in a long pitched, helically spiraled coil around a flexible, plastic inner tube. The radially inner surface of each wire is embedded within the inner tube, and, at random intervals, the material forming the inner tube extends radially outwardly between the adjacent casing wires to anchor the inner tube against substantial longitudinal movement with respect to the casing wires. A flexible, outer covering encompasses the coil of casing wires such that the radially outer surface of each wire is embedded therein. The embedment of the casing wires into both the inner tube and outer cover eliminates voids and interstices between the casing components.

3,395,552
POWER TRANSMITTING FLEXIBLE COUPLING
Herbert J. Hauser, Jr., East Moline, Ill., assignor to American Air Filter Company, Inc., Louisville, Ky., a corporation of Delaware
Filed Feb. 1, 1966, Ser. No. 524,189
4 Claims. (Cl. 64—11)

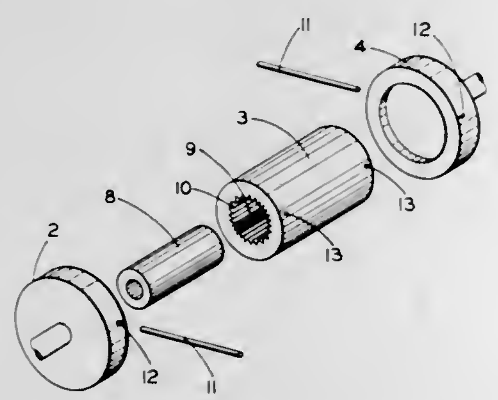

A flexible coupling to transmit power from a driving member to a driven member which includes a tubular flexible outer member connected to the driving member and the driven member and a stiff insert disposed within the flexible member so that the outer periphery of the stiff member contacts the inner periphery of the flexible member.

3,395,553
TORQUE LIMITING DRIVE COUPLING
Ellarson R. Stout, Fayson Lakes, N.J., assignor to Curtiss-Wright Corporation, a corporation of Delaware
Filed Apr. 7, 1966, Ser. No. 540,928
3 Claims. (Cl. 64—15)

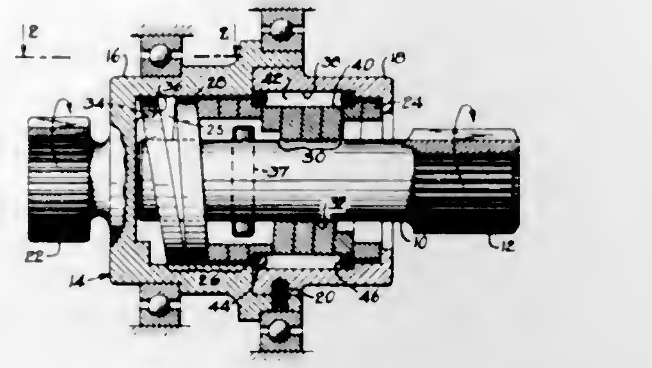

A coupling is arranged to transmit torque up to a predetermined maximum value through a helical spring located between input and output members of the device, and to enable the output member to overrun the input member with only an end coil of the spring in rubbing contact with relatively rotating structure, as well as permit misalignment of the members.

3,395,554
KNEE STRETCH STOCKING
Siegfried Wallner, Jr., Clinton, Tenn.
(350 5th Ave., New York, N.Y. 10001)
Filed Sept. 12, 1966, Ser. No. 578,550
2 Claims. (Cl. 66—172)

A stocking double welt having registering portions thereof knit of conventional plain loops under normal tension and other registering portions knit of high stretch yarn under increased tension to permit adequate stretching and adequate recovery.

3,395,555
MAGNETIC PADLOCK
Henry Hickman, 1051 3rd St., Hermosa Beach, Calif. 90254
Filed June 7, 1967, Ser. No. 644,315
7 Claims. (Cl. 70—39)

A magnetic padlock has a non-magnetic body provided with a first pair of bores reciprocally receiving the arms of the hasp and a second pair of bores receiving cylindrical magnets which are laterally shiftable therein. The magnets carry engaging means for engaging the hasp

to keep it in a locked position. The magnetic properties of the magnets normally maintain them shifted in their

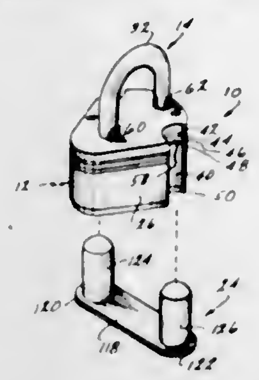

bores to a hasp-locking position. A magnetic key shifts the magnets laterally to an unlocked position.

3,395,556
DOOR CHAIN LOCK
Russell W. Waldo, St. Paul, Minn., assignor to Ideal Security Hardware Corporation, a corporation of Minnesota
Filed Mar. 27, 1967, Ser. No. 626,229
4 Claims. (Cl. 70—93)

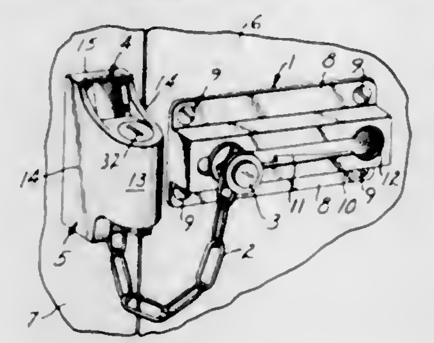

A chain lock for doors, including a housing defining a passage for reception of a locking slide mounted on one end of a chain, the housing further defining a recess for a tumbler lock operated latch bolt, the locking slide being movable into the passage to be engaged by the latch bolt and held thereby against movement out of the passage.

3,395,557
KEY-OPERATED AND PERMUTATION LOCK WITH KEY-CONTROLLED DISMOUNTING AND COMBINATION CHANGE
Nathan L. Berkowitz, 4762 N. Cumberland Blvd., Milwaukee, Wis. 53211
Filed Aug. 17, 1966, Ser. No. 572,949
24 Claims. (Cl. 70—285)

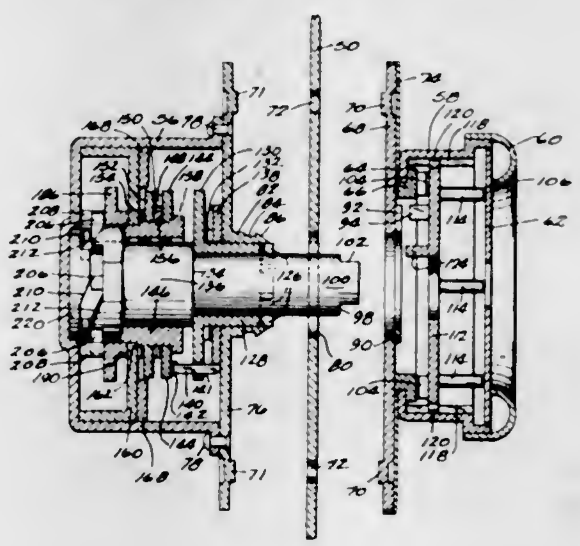

A permutation lock, also operable with a master key, comprises cases on opposite faces of a door and connected by means which is also key operable for the removal of the cases from the door. The same key used to open the lock and to disconnect the dial from the permutation mechanism is also used to permit the combination to be changed.

3,395,558
KEY-ACTUATED MECHANISM WITH EMERGENCY KEY
Fred J. Russell, 8635 Otis St., South Gate, Calif. 90280, Richard L. Armstrong, Santa Fe Springs, and Fred L. Jennie, Buena Park, Calif.; said Armstrong and said Jennie assignors to said Russell
Filed Mar. 9, 1966, Ser. No. 533,098
3 Claims. (Cl. 70—364)

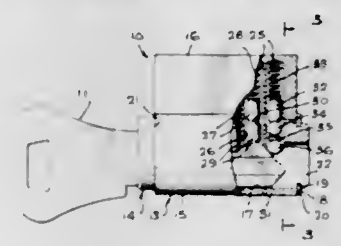

The invention is embodied in a pin tumbler lock in which a multiple number of pin tumblers are located in one set of axially aligned pin tumbler chambers having parts respectively in a pin tumbler housing and a rotating cylinder plug containing a keyway. On the circumference of the rotatable cylinder plug is a recess having a breadth at least as great as the pin tumbler chamber in the pin tumbler housing, and correspondingly at least as great as the maximum breadth of a cylindrical drive tumbler, the recess forming a shoulder which blocks rotation of the cylinder plug when the slot is in alignment with the set of pin tumbler chambers and the drive tumbler. The tumblers are responsive to operation by a special key capable of shifting the multiple number of tumblers to a position wherein a special camming tumbler falls into engagement with the shoulder and is capable of riding over the shoulder, thereby to permit unrestricted rotation of the cylinder plug.

3,395,559
STRAIGHTENING MACHINE
Fritz Ungerer, deceased, late of Pforzheim, Germany, by Rudolf Bauer, administrator, Pforzheim, Germany, assignor to Irma Ungerer, Pforzheim, Germany
Filed Dec. 27, 1965, Ser. No. 516,798
Claims priority, application Germany, Dec. 28, 1964, U 11,320
9 Claims. (Cl. 72—17)

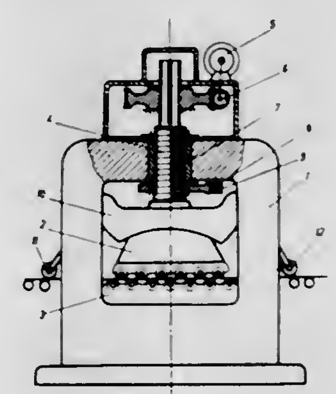

A straightening machine in which a metal strip is passed between upper and lower roll means to be straightened and which is provided with means for adjusting the position of one of the roll means toward and away from the other roll means for adjusting the straightening gap between the roll means and which includes further means

independent of said first-mentioned means for quickly adjusting this gap to let connected ends of metal strips, thicker than the strips, pass between the upper and lower roll means without imparting undue stresses to the strip connections or the components of the straightening machine.

3,395,560
APPARATUS FOR AND PROCESS OF COILING RODS
Daniel B. Cofer and George C. Ward, Carrollton, Ga., assignors to Southwire Company, Carrollton, Ga., a corporation of Georgia
Filed June 15, 1964, Ser. No. 375,399
21 Claims. (Cl. 72—66)

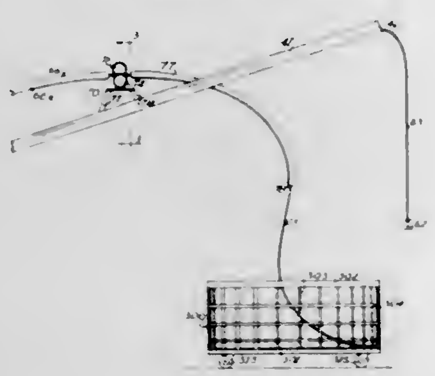

What is disclosed herein is an apparatus for and a method of coiling rod as it passes continuously from a hot-forming means such as a rolling mill. The apparatus and method disclosed involve directing the rod along an arcuate path into a vertical path which terminates at a point above a receptacle while cooling the rod, and increasing and decreasing the distance of the point from a support surface in the receptacle so as to increase and decrease the diameters of convolutions of the rod in the receptacle. Devices for applying coolant to and removing coolant from the rod are also disclosed.

3,395,561
STRAIGHTENER FOR DEFORMED SIDES OF RAILROAD CARRIERS
Francois Lague, Ville Jacques Cartier, Quebec, and Normand Ruel, Ville Lemoyne, Quebec, Canada, assignors to Equipment R. Lague Limitee, Ville Lemoyne, Quebec, Canada
Continuation-in-part of application Ser. No. 490,508, Sept. 27, 1965. This application Jan. 8, 1968, Ser. No. 696,427
6 Claims. (Cl. 72—308)

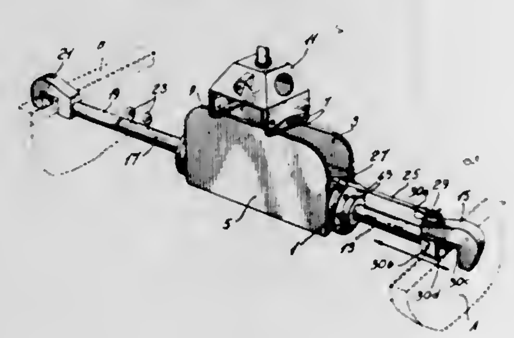

The device of the invention is portable and is intended to straighten the deformed panel-like sides of box cars, gondolas or the like bulk material railroad carriers. It is formed with a single hydraulic motor of the piston-cylinder type which can be suspended horizontally or diagonally from a crane and be operated from a tractor. The hydraulic motor is preferably mounted between side plates for the suspension thereof. It is provided with a piston rod which freely rotates about its longitudinal axis and which is terminated by hook-like arrangement. It also comprises a fixed rod projecting from the rear end of the motor which is also terminated by a hook-like arrangement. The fixed rod may be telescopic in order to be adjustable. Means are provided to swivel both hook-like arrangements about the longitudinal axes of the two rods and to lock the same into selective positions.

3,395,562
CUP DRAWING DIE AND METHOD
Michael Bushi, Cleveland, Ohio, assignor to The Quality Tool & Die Co., Cleveland, Ohio, a corporation of Ohio
Filed Sept. 27, 1965, Ser. No. 490,415
5 Claims. (Cl. 72—350)

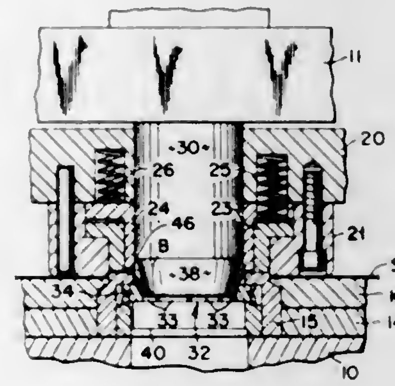

A drawing press having a plurality of ring segments contained in an internal groove in a drawing die which are urged radially inwardly by a spring ring disposed around the segments. The drawing die has an annular lip which overlaps a shoulder on the segments for centering the segments in their radially innermost position, and an internal stripping ledge which is adapted to engage the upper edge of the drawn article to strip the same from the punch during retraction of punch from the drawing die.

3,395,563
FORGING MACHINE
Erich Ribback, Unterm Bocksberg, Wasserbillig, Luxembourg
Filed Apr. 20, 1966, Ser. No. 543,999
Claims priority, application Germany, Apr. 22, 1965, R 40,436
10 Claims. (Cl. 72—408)

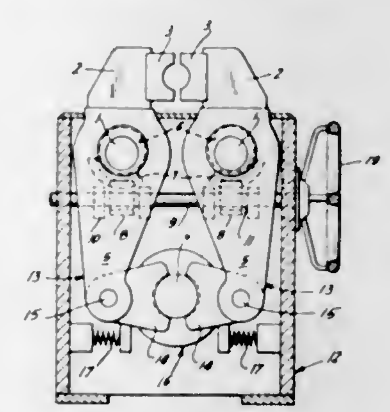

1. In a forging machine, an eccentric rotatable about a fixed axis; a strap oscillatably mounted on said eccentric; and adjusting means for changing the angular position of said eccentric with reference to said axis, comprising a first threaded member rigid with said eccentric, a second threaded member meshing with said first member and rotatably supported by said strap for oscillation with the strap about said axis, said second member being arranged to transmit oscillations to said eccentric through said first member and to change the angular position of said eccentric in response to rotation with reference to said strap, and a device for rotating said second member.

3,395,564
ELASTOMERIC STRAIN MODULE AND METHOD OF CALIBRATION THEREOF
Leonard U. Rastrelli and Eugene L. Anderson, San Antonio, Tex., assignors, by mesne assignments, to the United States of America as represented by the Secretary of the Navy
Filed May 25, 1964, Ser. No. 370,138
6 Claims. (Cl. 73—1)

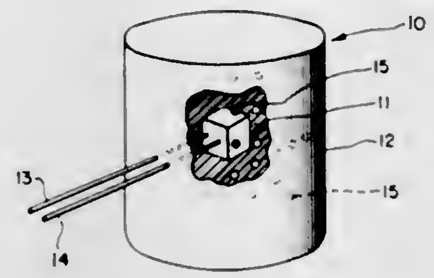

1. A fully calibrated, elastomeric strain measuring module for coupling to a signal measuring system and for embedment in an elastomeric body, comprising:
(a) a signal generating transducer;
(b) means for connecting said transducer to the signal measuring system;
(c) a capsule of elastomeric material encasing said transducer;
(d) said material having physical properties substantially equivalent to those of the elastomeric body including being relatively transparent; and
(e) a plurality of opaque spaced particles embedded in said capsule, whereby the module may be precalibrated to account for distortions in the strain gradients occasioned by introduction of the transducer into the elastomeric body.

3,395,565
GAUGE CALIBRATION BY DIFFUSION
Frank J. Brock, Winchester, and Frank Feakes, Lexington, Mass., assignors to National Research Corporation, Newton Highlands, Mass., a corporation of Massachusetts
Filed Mar. 11, 1966, Ser. No. 533,659
18 Claims. (Cl. 73—4)

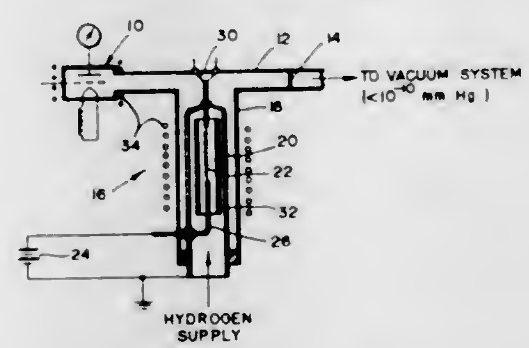

Vacuum gauge calibration by diffusing a known quantity of gas through a heated barrier into a gauge to raise pressure in the gauge to a known level for comparison with the gauge's pressure reading.

3,395,566
TIMEPIECE TESTER AND METHOD
Erich Jucker, La Chaux-de-Fonds, Switzerland, assignor to Le Portescap S.A., La Chaux-de-Fonds, Switzerland
Filed July 20, 1965, Ser. No. 473,437
Claims priority, application Switzerland, Aug. 31, 1964, 11,333/64
14 Claims. (Cl. 73—6)

There are disclosed herein a method and apparatus for the instantaneous optical checking of timepiece movements and the like by: counting the successive pulses of a predetermined oscillating frequency; indicating each pulse on one of a plurality of optical readout means; sensing each pulse or beat of a timepiece movement being

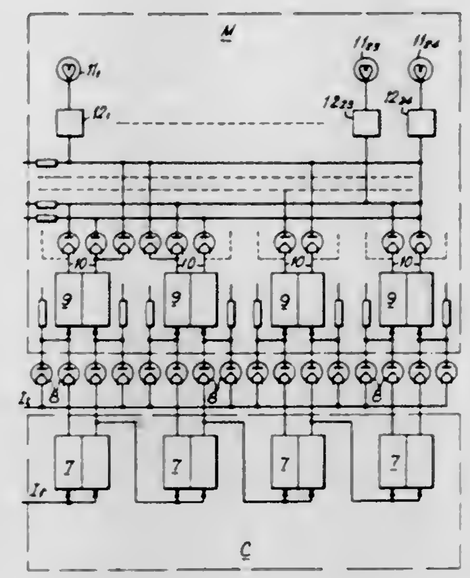

checked; and using each successive beat to determine the particular optical readout means to which each successive oscillating frequency pulse is directed.

3,395,567
GAS CHROMATOGRAPH
Seiji Sanga, Tokyo, and Takao Ohtsu and Fujihiko Sekido, Yokohama-shi, Japan, assignors to Japan Gasoline Co., Ltd., Tokyo, Japan, a corporation of Japan
Filed Feb. 2, 1965, Ser. No. 429,856
Claims priority, application Japan, Feb. 4, 1964, 39/5582
5 Claims. (Cl. 73—23.1)

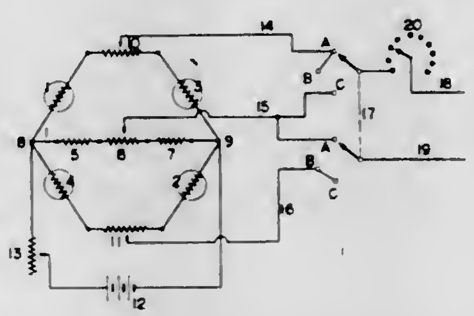

A gas chromatographic apparatus having a plurality of thermal conductivity cell portions, a portion of which is reference cell portions and the remainder of which is sampling cell portions and means to feed gas to be analyzed through these portions for comparison with a reference, temperature responsive electrical resistance elements in each cell portion, with the resistance elements being connected in a plurality of parallel circuits which include a variable resistance, the variable resistances being connected to a multiposition double pole switch, which when it is in different positions, connects the various parallel circuits in different bridge circuits.

3,395,568
ARRANGEMENT FOR AUTOMATICALLY CLOSING ENERGY PASSAGE SYSTEMS, ESPECIALLY AIR PASSAGES
Alois Lödige, Frankfurter Weg 13, Paderborn, Germany
Filed Aug. 10, 1964, Ser. No. 388,499
Claims priority, application Germany, Aug. 10, 1963, L 45,580
8 Claims. (Cl. 73—35)

1. An apparatus for initiating safety measures under predetermined emergency condition as represented by shock or pressure waves comprising; a stationary support,

an actuating member moveable in said support and having a set position and operable to initiate said safety measures when released from said set position, a release element of relatively small mass pivotally connected to said member for moving the member in said support into said set position and for releasing it therefrom, latch means on said support for engaging said element when said element is moved into reset position to locate said member in its said set position and operable to hold said element in said reset position, adjustable means on said support engaging said latch means when said element is in its said reset position and holding said element at the

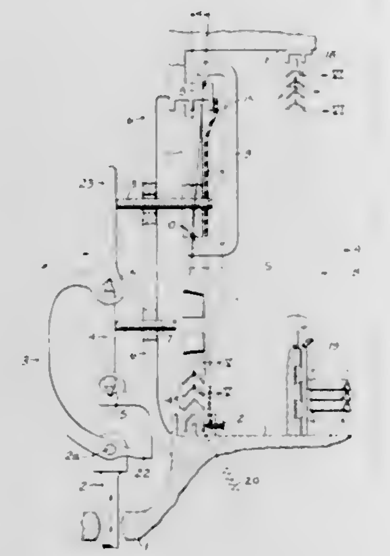

point of release from said latch means, a second element having a mass large with respect to that of said release element and supported in said support so as to have a normal position therein while being moveable therein in response to shock and pressure waves, and trip means carried by said second element and operatively engaging said release element whereby movement of said second element under emergency conditions as represented by shock or pressure waves will move said release element out of supporting engagement with said latch means and release said actuating member from its set position.

3,395,569
DYNAMIC CURVATURE SENSING AND MEASURING DEVICE
Anthony A. Sheridan, 1007 Sharon Drive, Glen Burnie, Md. 21061, and Rudolph W. Miller, 824 Chester Ave., Annapolis, Md. 21403
Filed July 30, 1965, Ser. No. 476,212
4 Claims. (Cl. 73—35)

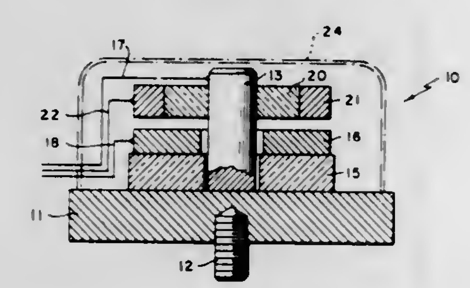

This disclosure relates to a piezosensitive device, preferably piezoelectric, for detecting dynamic curvature or distortion of a structure member. The signal generated by the first piezoelectric element, which is in response to the acceleration and the deflection of the element, is vectorially combined with the signal generated by the second piezoelectric element which is only in response to the acceleration of the device. Thus, the total output signal is indicative purely of dynamic distortion.

3,395,570
METHOD AND APPARATUS FOR TESTING CIGARETTES OR THE LIKE
Horst Kochalski, Hamburg-Lohbrugge, Germany, assignor to Hauni-Werke Koerber and Co. K.G., Hamburg-Bergedorf, Germany
Filed Dec. 20, 1965, Ser. No. 514,931
Claims priority, application Germany, Dec. 18, 1964, H 54,629
18 Claims. (Cl. 73—45.2)

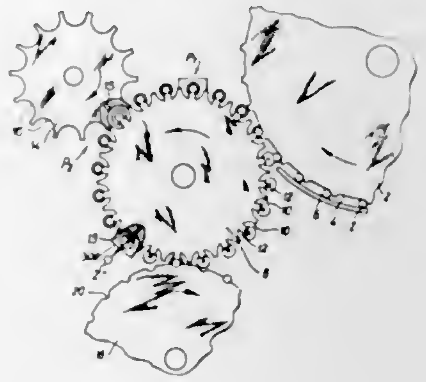

Cigarettes are tested for the integrity of their wrappers and fillers in two successive stages and in such a way that defects of the filler cannot interfere with detection of defects in the wrapper or vice versa. Signals produced in response to detection of defective fillers and/or wrappers are employed to eject the corresponding cigarettes.

3,395,571
VIBRATION TESTING METHOD FOR PRODUCING A MATCHED SET OF GOLF CLUBS
Malcolm L. Murdoch, 170 Preston Road, Chorley, England
Filed July 19, 1965, Ser. No. 472,900
Claims priority, application Great Britain, July 22, 1964, 29,220/64
3 Claims. (Cl. 73—67.2)

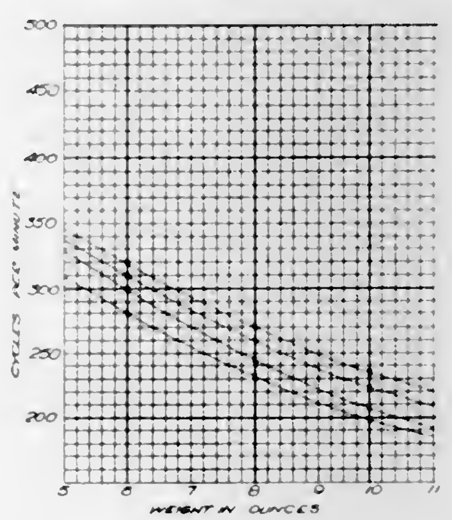

Golf clubs are matched according to the natural frequency of vibration of the shafts. In establishing the frequency, a golf club shaft having a club head thereon is firmly gripped at the end remote from the club head, and is plucked so as to be set in vibration, the frequency of vibration being measured in any convenient way for a range of club head weights. The clubs are "matched" by selecting for a given shaft length and club head weight, shafts of an appropriate frequency.

3,395,572
APPARATUS FOR ULTRASONIC DETECTION AND DISPLAY OF LOCATION OF MATERIAL DEFECTS
Neil A. Sinclair, Gales Ferry, Conn., assignor to General Dynamics Corporation, New York, N.Y., a corporation of Delaware
Filed Feb. 5, 1965, Ser. No. 430,666
6 Claims. (Cl. 73—67.8)

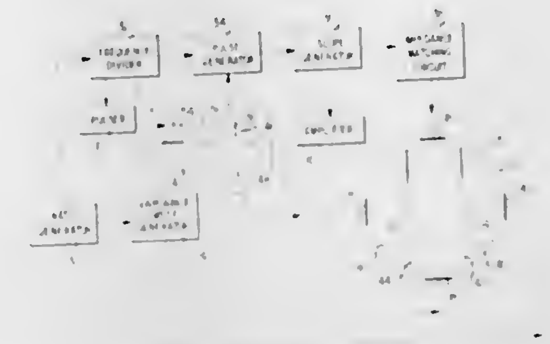

Apparatus for determining the location and dimension of defects in solid bodies by ultrasonic inspection, in which an ultrasonic beam is transmitted in the solid body to set up one or more ultrasonic reflections which occur when the beam intercepts a defect and which are received by a sensor to produce a sharp deflection in the base line trace of a display apparatus. A second trace is initiated in timed relation to the transmission of the ultrasonic beam into the test body, having a slope corresponding to the angle of the beam in the body and intersecting the deflection in the base line trace upon reception of a reflection caused by the defect. A template bearing an outline of the shape of the body under test and positioned over the face of the display apparatus facilitates precise location of the defect relative to the test body itself, observing the intersection of the sharp base line trace deflection and the second trace corresponding to the beam angle.

3,395,573
BOTTLE INSPECTION METHOD AND APPARATUS
Theodore C. Baker, Wayne, Benny B. Mathias, Maumee, and James R. Sager, Toledo, Ohio, assignors to Owens-Illinois, Inc., a corporation of Ohio
Filed Jan. 27, 1965, Ser. No. 428,369
8 Claims. (Cl. 73—104)

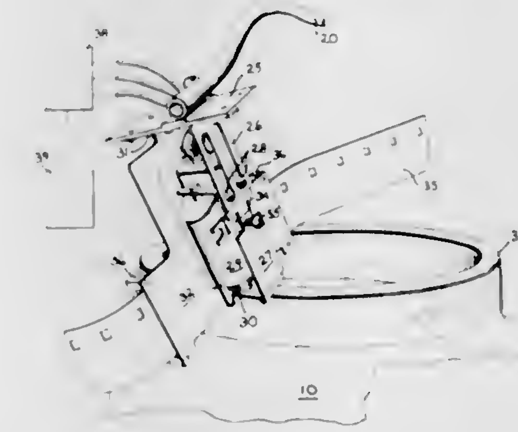

1. The method of inspecting a plurality of glass containers for line-over-finish defects comprising, the steps of moving a first container into an inspecting station, rotating the container in an upright position about its central axis, placing the edge of a strip of flexible material in contact with the sealing surface portion of the container, supporting said strip of material so that it is free to vibrate at the edge in response to the sensing of a defect in the container sealing surface, and sensing the vibration of said flexible material to detect a line-over-finish defect.

3,395,574
ENGINE TESTER MOUNTING SYSTEM
Anatolijs Mazurkevics, Kalamazoo Township, Kalamazoo County, and Ollie P. Pilgrim, Kalamazoo, Mich., assignors to Allen Electric and Equipment Company, Kalamazoo, Mich., a corporation of Michigan
Filed Nov. 30, 1966, Ser. No. 597,992
9 Claims. (Cl. 73—116)

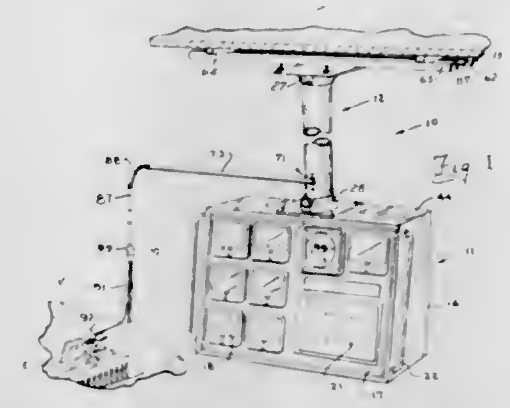

A mounting system for an automotive engine tester having a test instrument display in a console which is supported by a vertical column and having adjustment means whereby the column may be rotatably adjusted with respect to the support means carrying the column. The mounting system also has an elongated conduit extending transversely away from the column and is swivelably mounted on same to support electrical conductors so that the free ends thereof are supported in a spaced relation from the console near an engine to be tested and, therefore, readily accessible for connecting said engine to be tested to the test instruments in the console.

3,395,575
APPARATUS FOR TESTING THE FUEL PUMPS OF COMPRESSION IGNITION ENGINES
Reginald S. Emerson, 34 Highlands Road, Buckinghamshire, Buckingham, England
Filed Oct. 12, 1965, Ser. No. 495,233
Claims priority, application Great Britain, Oct. 14, 1964, 41,913/64
7 Claims. (Cl. 73—119)

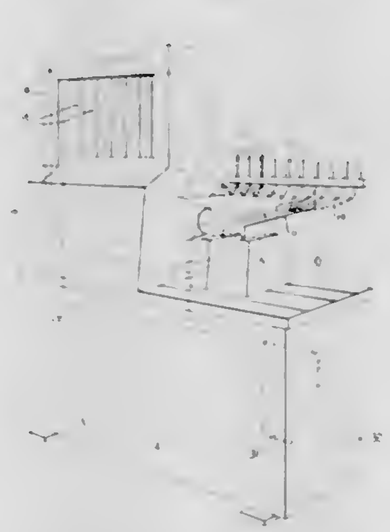

1. Apparatus for testing the fuel pumps of compression ignition engines comprising: a bench adapted to support a pump to be tested, said pump having a fuel inlet and fuel outlet means, a plurality of fuel injectors mounted on said bench each having an inlet and an outlet, first conduit means connecting said fuel outlet means of the pump to the inlets of said injectors, a series of calibrated test tubes supported on said bench, second conduit means connected to said outlets of the injectors and leading to said test tubes, driving means carried by said bench and adapted to be drivingly connected to said pump to be tested, a fuel reservoir carried by said bench and provided with a fuel

outlet, a fuel-passage leading from said outlet in said fuel reservoir and adapted to be connected to said fuel inlet of said pump, a stationary upright frame on said bench wherein said calibrated test tubes are arranged in an upright position, said frame being open at both sides and being disposed longitudinally of said bench in a prominent position whereby said calibrated test tubes may be read easily from either side of said bench.

3,395,576
COMBINATION TURN, BANK AND CLIMB INDICATOR
James R. Kuiper and Lee C. Verduin, Grand Rapids, Mich., assignors to R. C. Allen Business Machines, Inc., Grand Rapids, Mich., a corporation of Michigan
Filed May 13, 1966, Ser. No. 549,952
4 Claims. (Cl. 73—178)

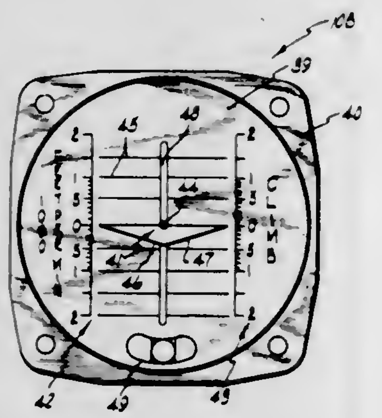

Combination turn, bank and climb indicator including an indicia plate having climb and rate of turn indicia thereon, wherein the rate of turn indicia includes vertically spaced horizontal grid lines, and a movable climb indicator in the form of a vertically movable dot coacting with the climb indicia, and a movable turn indicator including a horizontal bar integral and vertically movable with the dot indicator and pivotally movable and having upwardly and outwardly inclined edges coacting with the vertically spaced grid lines.

3,395,577
WIND DEVICE PARTICULARLY ADAPTED FOR BOATS
Melville Keim, 646 Lido Nord, Newport Beach, Calif.
Filed July 12, 1965, Ser. No. 471,326
10 Claims. (Cl. 73—188)

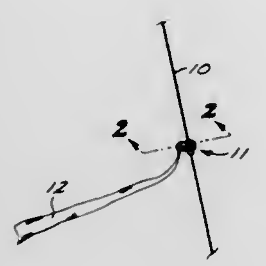

A device which includes several wraps of adhesive tape around a boat shroud, or stay, to form an upwardly facing shoulder at a mid-point of a shroud of a boat, a bearing resting on said shoulder and having a hole through which is received said shroud, which bearing has a slit in one side and is flexible to permit the bearing to be twisted to open said slit to permit the bearing to be applied around said shroud at a mid-point thereof, a link resting on said bearing and having a hole through which said shroud is received, said link being flexible and having a slit connecting said hole to the periphery of the link to permit it to be twisted to open said slit to be mounted on said shroud at a mid-point thereof, and a flexible tail attached to said link at a point spaced from said hole.

3,395,578
COMPOUND METER AND VALVE
George D. Simonds, Jr., Mequon, Wis., assignor to Badger Meter Manufacturing Company, Milwaukee, Wis., a corporation of Wisconsin
Filed Sept. 28, 1965, Ser. No. 490,862
28 Claims. (Cl. 73—197)

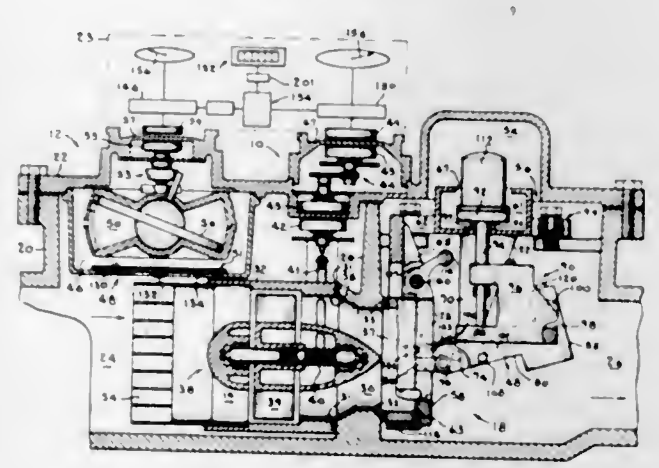

A valve arrangement is provided wherein a valve member for controlling flow in a high flow passage is held closed by a lever. The lever is movable relative to the valve member and holds the valve member closed until opening assist means disposed in a low flow passage initiates movement of the lever to reduce the holding force on the valve. Flow through the high and low flow passages occurs, respectively, in response to open and closed conditions of the valve member. The valve arrangement is also used to control flow through the high and low flow passages of a compound meter. In a further aspect of the compound meter, a single register assembly is driven from both the high and low flow meters through a differential drive with separate calibrating indicators and drives provided for both the low and high flow meters.

3,395,579
APPARATUS TO ENSURE ACCURATE WORKING OF METERS AT LOW FLOW RATES
Terence A. Stoten, Barton, England, assignor to George Kent Limited
Filed Dec. 2, 1965, Ser. No. 511,147
Claims priority, application Great Britain, Dec. 8, 1964, 49,986/64, Patent 1,064,396
16 Claims. (Cl. 73—199)

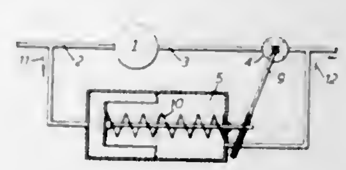

An apparatus for controlling the flow of fluid through a flow meter so that accurate measurements may be obtained at low rates and comprising a cylindrical housing having a movable wall therein to define two chambers. One chamber is connected to the fluid line upstream of the flow meter and the other chamber to the fluid line downstream of the flow meter. A valve having positive open and closed positions is in the fluid line and is operatively connected to the movable wall so that the valve is opened or closed in response to predetermined positions of the movable wall.

3,395,580
THERMOSTAT
Yoshikaze Kuze, 3-Go, 31-Ban, 1-chome, Magome, Higashi, Ota-ku, Tokyo, Japan
Filed May 4, 1966, Ser. No. 547,631
Claims priority, application Japan, May 13, 1965, 40/27,749; June 17, 1965, 40/35,760; July 21, 1965, 40/43,651; Oct. 11, 1965, 40/61,901
11 Claims. (Cl. 73—368.3)

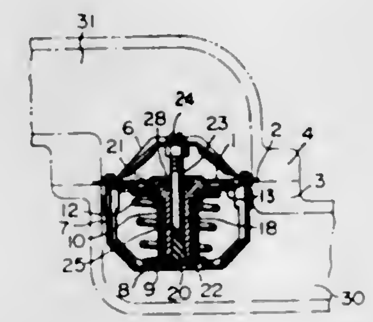

A thermostat having an outer heat-sensitive chamber and an open-ended guide means mounted therein in a fixed, spaced relationship. Valve actuation means, including a push rod and rubber-like sealing plug, is slidably and sealingly mounted in the guide means. A wax-like thermal responsive substance is sealed in and fills the space between the chamber and guide means and is in communication with the sealing plug. When the thermostat is heated, the wax-like substance expands to exert a compressive force on the sealing plug to push the push rod out of the guide means and thereby actuate the associated valve.

3,395,581
PRESSURE MEASURING APPARATUS
Anatole J. Sipin, 117 E. 77th St., New York, N.Y. 10021
Filed Sept. 29, 1965, Ser. No. 491,163
23 Claims. (Cl. 73—398)

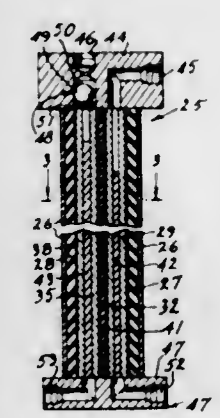

Pressure measuring apparatus including an electrical manometer with an internal cavity filled with conductive liquid and a flat dielectric plate, having one side in contact with the liquid and the other side in contact with a stationary electrode to form a pressure sensitive variable capacitor. Change in height of the column of conductive liquid in response to pressure varies the capacitance of the variable capacitor, providing an output to indicate pressure.

3,395,582
HYDROMETER
Edward C. Schurch, 885 S. Milwaukee St., Denver, Colo. 80209
Filed Nov. 14, 1966, Ser. No. 593,904
3 Claims. (Cl. 73—446)

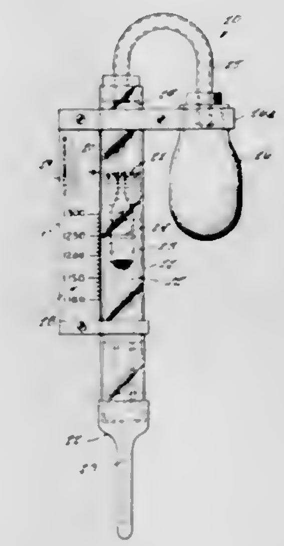

1. In an improved hydrometer, the combination of a transparent glass tube, a fitting secured to the lower end of said glass tube, said fitting having an opening therethrough to admit and discharge liquid into and from said glass tube, a molded bracket at the upper end of said tube, a rubber bulb supported by said bracket, a passage molded within said bracket communicating between the upper end of said glass tube and said rubber bulb, a pistol type grip formed at one end of said bracket, said grip being adjacent said rubber bulb for convenient squeezing thereof, and means for measuring the specific gravity of liquids placed within said glass tube.

3,395,583
ACCELEROMETER
Albert P. Bartholomew, Jr., Allentown, Pa., assignor to Electro-Mechanical Instrument Co., Perkasie, Pa., copartners
Filed June 24, 1965, Ser. No. 466,746
8 Claims. (Cl. 73—514)

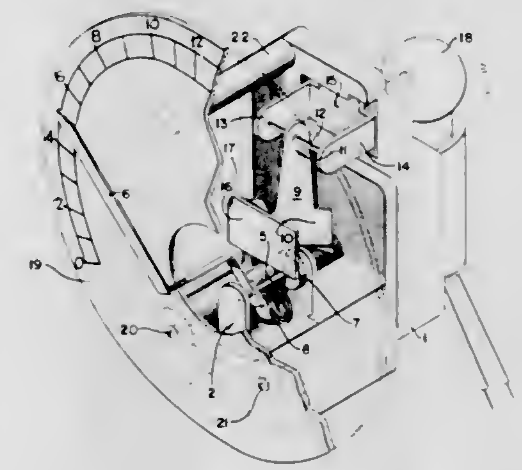

An accelerometer of the front face type is described. A pendulum is mounted for rotation in accordance with the acceleration forces. The motion of the pendulum about

its axis is converted to motion of the pointer about a perpendicular axis by providing magnetic coupling between the pendulum and a permanent magnet mounted on the pointer carrying arbor.

3,395,584
BRAKE ACTUATORS
Frank T. Cox and William J. Williams, Ashtabula, Ohio, assignors, by mesne assignments, to Rockwell-Standard Company, Pittsburgh, Pa., a corporation of Delaware
Filed Mar. 22, 1966, Ser. No. 536,384
11 Claims. (Cl. 74—110)

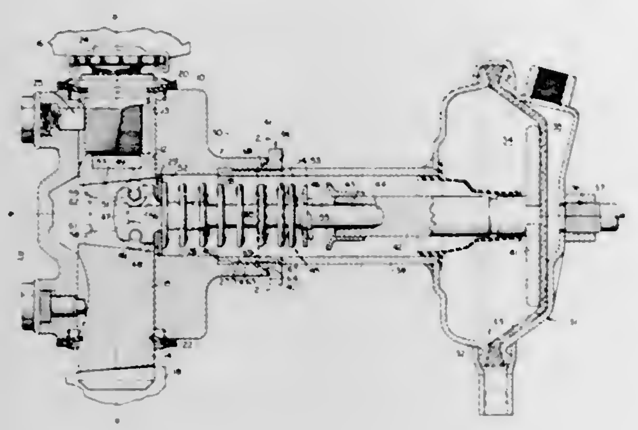

1. In a brake assembly of the type wherein a reciprocable wedge actuator projects into an actuator housing member containing two oppositely slidable brake shoe associated plungers disposed in aligned bores having a common axis and a fluid pressure motor has a tubular casing extension member threadedly coupled with said housing member with said wedge actuator extending through said casing extension member between a fluid pressure responsive element of said motor and the inner ends of said plungers, said housing member having a threaded bore into which the threaded end of said casing extension member extends, the improvement that comprises an axially outwardly facing abutment within said threaded bore against which the end of said casing extension member is firmly seated in a plane disposed at a fixed distance from the axis of reciprocation of said plungers, and means for non-rotatably securing said casing extension member to said actuator housing member.

3,395,585
TIMER INDEXING MECHANISM
George Obermann, Niles, Ill., assignor, by mesne assignments, to Controls Company of America, Melrose Park, Ill., a corporation of Delaware
Filed Oct. 24, 1965, Ser. No. 504,910
5 Claims. (Cl. 74—124)

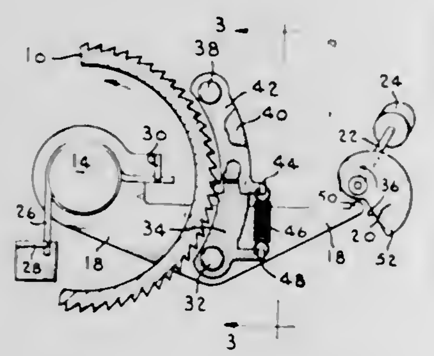

The present indexing mechanism can be categorized as a single tooth drive in which the stop pawl and the drive pawl operate on the same ratchet tooth which, in combination with die stamped steel pawls, provides a positive stop pawl gap with a reduced variation as a result of manufacturing tolerances.

3,395,586
INFINITELY VARIABLE, HYDRAULICALLY CONTROLLED TRANSMISSIONS FOR MOTOR VEHICLES
Herbert Kirchner, Bad Homburg vor der Hohe, Germany, assignor to Reimers-Getriebe AG, Zug, Switzerland
Filed Mar. 8, 1966, Ser. No. 532,765
Claims priority, application Germany, Mar. 10, 1965, R 40,072
9 Claims. (Cl. 74—230.17)

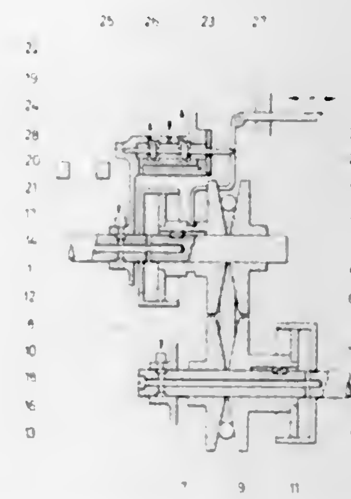

An infinitely variable hydraulically controlled transmission for a motor vehicle has two pairs of conical pulley disks connected by an endless driving element. At least one disk of each pair is adjustable in the axial direction by a piston mounted in a cylinder and supplied with hydraulic fluid. A pendulum mounted on the vehicle for backward and forward movement in response to change in the speed of the vehicle controls a throttle valve in a pipe leading to the cylinders, in such a way as to increase the pressure and thereby to increase the transmission ratio of the transmission upon either acceleration or deceleration of the vehicle.

3,395,587
TORQUE-SENSITIVE STEPLESS SPEED CHANGE GEAR
Vittorio Casini, Pisa, Italy, assignor to Piaggio & C. S.p.A., Genoa, Italy, an Italian company
Filed May 4, 1966, Ser. No. 547,517
Claims priority, application Italy, May 15, 1965, Patent 760,539
15 Claims. (Cl. 74—230.17)

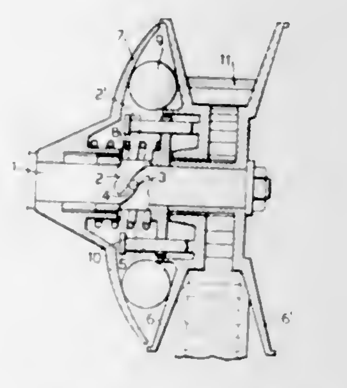

A device for varying the drive ratio between a driving member and a driven member in which a displaceable member controls the drive ratio and is subject to the action of a speed responsive mechanism to increase the drive ratio, and to the action of a torque responsive mechanism which decreases the drive ratio in opposition to the speed responsive mechanism only after a predetermined value of torque is reached.

3,395,588
FLYWHEEL ROTATION DEVICE
Harold R. Bleigh, East Peoria, and George W. Walker, Pekin, Ill., assignors to Caterpillar Tractor Co., Peoria, Ill., a corporation of California
Filed June 29, 1967, Ser. No. 649,997
10 Claims. (Cl. 74—405)

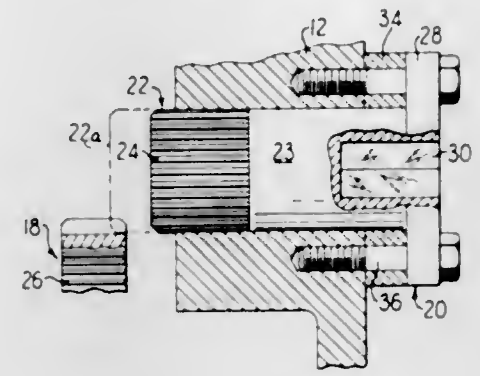

A flywheel rotation device having a pinion movable into engagement with a ring gear associated with an engine flywheel, the pinion being manually rotatable to produce rotation of the flywheel for engine timing purposes.

3,395,589
MOTION CONVERTING APPARATUS
Milton Gersten, Valley Stream, N.Y., assignor to Orbit Instrument Corporation, Syosset, N.Y., a corporation of New York
Filed June 6, 1966, Ser. No. 555,626
17 Claims. (Cl. 74—471)

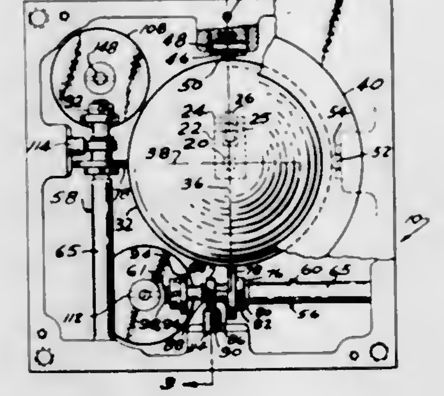

An apparatus for converting a resultant input motion into component output motions in at least two different planes by the use of a sphere having universal movement and means engaging the sphere to convert its universal motion into the component output motions.

3,395,590
BLOCKOUT MECHANISM FOR PUSHBUTTON SWITCH
John H. Williams, Barrington, Ill., assignor to Oak Electro/Netics Corp., a corporation of Delaware
Filed Apr. 15, 1966, Ser. No. 542,914
8 Claims. (Cl. 74—483)

A blockout mechanism for a pushbutton assembly in which a plurality of groups of pushbuttons each operate a pushrod for reciprocating movement. A first blockout mechanism is provided for each group of pushrods to permit only one pushbutton in a single group to be fully depressed at a time. A connecting means is provided for each group of pushrods and the connecting means is actuated when a pushbutton is depressed in the respective group. A second blockout mechanism independent of the first blockout mechanism is provided to permit only

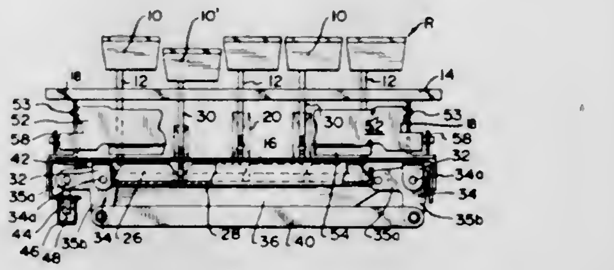

one connecting means to be actuated at a time so that the two blockout mechanisms and the connecting means cooperate to permit only one pushbutton in the entire pushbutton assembly to be fully depressed at a time. Each blockout mechanism comprises a plurality of blockout members positioned end-to-end and each blockout member has an abutting surface which overlaps with the abutting surface of each adjacent blockout member.

3,395,591
REMOTE CONTROL ASSEMBLY CONSTRUCTION
Robert J. Shaeffer, Skippack, Pa., assignor to Teleflex Incorporated, North Wales, Pa., a corporation of Delaware
Continuation-in-part of application Ser. No. 455,489, May 13, 1965. This application July 8, 1965, Ser. No. 470,397
9 Claims. (Cl. 74—501)

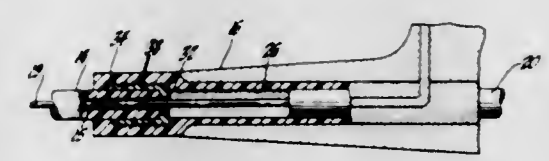

A remote control assembly of the type having a guide comprising a flexible conduit and an end fitting for supporting a movable core element. A flexible conduit is mechanically connected to an end fitting, which is made of organic polymeric material incompatible for bonding to the conduit, by disposing a retaining means on the exterior of the conduit and molding the end fitting about the retaining means so as to form a mechanical interlock to prevent relative axial movement between the conduit and the end fitting.

3,395,592
VERNIER CONTROL WITH AUTOMATIC RELEASE
Richard D. Houk, Stow, Ohio, assignor to Morse Controls Inc., a corporation of Ohio
Filed Sept. 29, 1966, Ser. No. 583,000
8 Claims. (Cl. 74—502)

A control device for moving the core of a push-pull control cable axially with respect to the casing thereof in gross amounts and, selectively, in accurately fine, or vernier, increments. The control device has an operating rod, one end of which is connected to the core of a push-pull cable. The other end of the operating rod presents a control knob. The operating rod is slidably received

within a housing that is secured to the casing of the control cable. A control sleeve is interposed between the operating rod and the housing for axial movement only simultaneously with the operating rod. The operating rod and the control sleeve are, however, rotatable with, and with respect to, each other. Relative rotation of the oper-

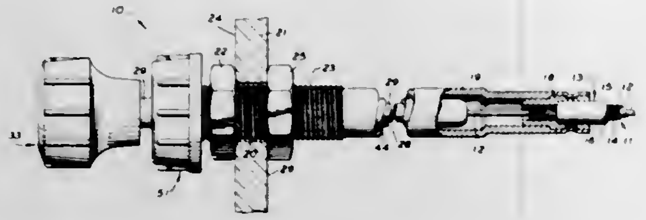

ating rod with respect to the control sleeve meshes a thread engaging means with a thread means, and relative rotation of the control sleeve with respect to the operating rod unmeshes the thread engaging means from the thread means. Thus, gross control of the core is effected merely by axial translation of the control knob, and vernier control is effected by rotation of the control knob.

3,395,593
MECHANISM FOR SELECTING PATTERNS IN AN AUTOMATIC PATTERN STITCH SEWING MACHINE
Toshio Sawada, Kariya, Japan, assignor to Aisin Seiki Kabushiki Kaisha, Kariya, Aichi, Japan
Filed July 11, 1966, Ser. No. 564,170
Claims priority, application Japan, July 15, 1965, 40/58,090
2 Claims. (Cl. 74—569)

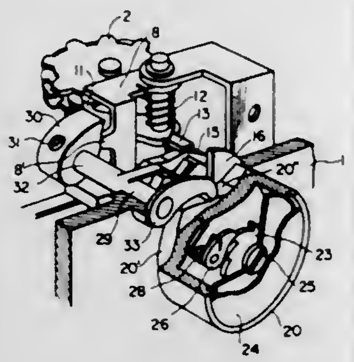

A mechanism for selecting a desired pattern cam from a pile of rotary zigzag pattern cams, which is so arranged that the cam follower or contact finger can be transferred not only step-by-step consecutively, but also may be transferred from one pattern cam to another pattern cam which is seperated from the one pattern cam by one or more intermediate pattern cams, passing by an intermediate undesired pattern cam or cams, by a simple manipulation of the selecting dial knob.

3,395,594
POWER UNITS SUCH AS GEAR MOTORS WITH IMPROVED MOTOR BASE AND ADAPTER ASSEMBLY
Ronald A. Blair, Pompton Plains, N.J., assignor to General Electric Company, a corporation of New York
Filed Oct. 20, 1966, Ser. No. 588,129
9 Claims. (Cl. 74—606)

2. A gear motor comprising: a motor having a drive shaft and a support base for mounting the motor; a gearing unit having a housing with an end wall having an opening therein, a motor base adapter including a positioning plate member with a registration portion extending into the opening of said housing and also including a motor base support member disposed essentially in perpendicular relationship with respect to said positioning plate member and being integral therewith, said positioning plate member having formed therein a hub portion, and said drive shaft having one end projecting outwardly into said hub portion and coupled with a gear of said

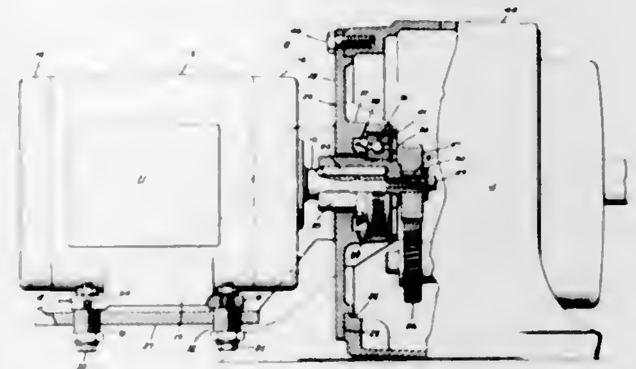

gearing unit; means for adjustably securing and positioning said support base of the motor in a predetermined position with respect to said positioning plate member; and means releasably connecting said positioning plate member to said end wall with the opening therein to effect a connection therebetween, said connection of said positioning plate member to said end wall arranging said motor in preselected alignment with respect to the gearing unit.

3,395,595
CUTTING DEVICE WITH COMPENSATION FOR WEAR OF THE CUTTING EDGE
Dieter Braun, Doffinger, Wurttemberg, and Klaus Rüdinger, Stuttgart-Rot, Germany, assignors to Fortuna-Werke Spezialmaschinenfabrik AG., Stuttgart-Bad Cannstatt, Germany
Filed July 15, 1965, Ser. No. 472,368
Claims priority, application Germany, July 17, 1964, F 43,464
10 Claims. (Cl. 83—174)

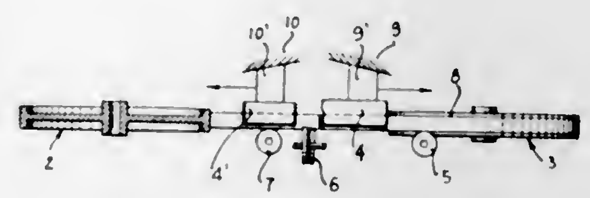

Two spaced apart rotary carriers have a band-type cutting member trained therearound. The cutting member has a cutting edge and a rear edge located oppositely the cutting edge. Means is provided for biasing the cutting member in lateral directions transversely of the direction in which it travels around the rotary carriers so as to maintain the cutting edge in a predetermined plane. Stop means opposes the biasing means so as to limit the extent to which the cutting member can move laterally under the influence of the biasing means.

3,395,596
DISAPPEARING TABLE
David E. Cusson, Ambler, Pa., assignor to The Warner & Swasey Company, Cleveland, Ohio, a corporation of Ohio
Filed May 31, 1966, Ser. No. 553,964
5 Claims. (Cl. 83—409)

A disappearing table which supports a workpiece at

die height in a turret punch press. The table supporting surface has rollers which selectively rise to support the

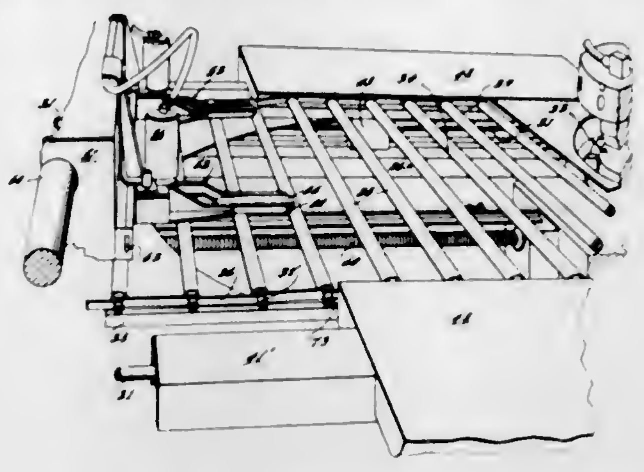

workpiece and selectively recede to avoid interference with the workholders.

3,395,597
BACK STRIP TRIMMING MACHINE
James H. Thorp, West Hartford, Conn., assignor to The Smyth Manufacturing Company, Bloomfield, Conn., a corporation of Connecticut
Filed Dec. 29, 1965, Ser. No. 517,227
3 Claims. (Cl. 83—417)

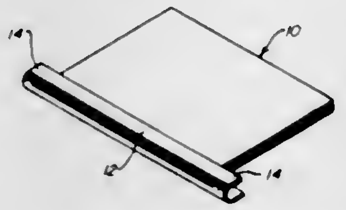

A machine for trimming the extending end portions of a back strip attached to a book signature has a magazine for supporting a plurality of signatures in vertically stacked relationship on an endless belt and for successively releasing signatures which are conveyed to a trimming station by the belt. Two sets of rotary knives at the trimming station are aligned with the magazine and run in constant shearing engagement to engage and shear the extending end portions of the back strips on signatures successively fed into the trimming station by the belt.

3,395,598
DIE RULES
Merrill D. Martin, 2 Mall Court, Oakland, Calif. 94611
Filed July 28, 1965, Ser. No. 475,400
2 Claims. (Cl. 83—663)

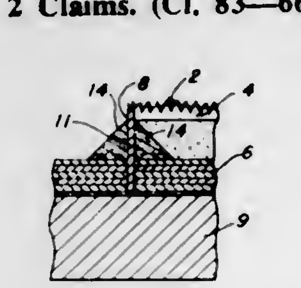

2. In a die rule mounting for the rotating element of a die cutting device for cutting blanks,

(a) the combination with a die rule formed of a strip of metal with a longitudinal cutting edge and an opposite base edge,
(b) and a mounting block of arcuate cross-section conforming to part of a cylinder about the axis of rotation of said rotating element,
(c) said mounting block having a cavity conforming substantially to the contour of said die rule,
(d) means to secure said die rule in said cavity so as to leave a portion of said die rule protruding from the convex surface of said curved mounting block,
(e) of a fillet of about 45 degrees formed on the outer convex face of said block along the opposite sides of said die rule, and
(f) said fillets being formed of an initially flowable and settable material converging against the respective sides of said strip above said convex face of said block and below said cutting edge thereby to stiffen said protruding portion of said strip of metal and inhibit the climbing of the blanks upon said die rule,
(g) ears bent out of the die rule in opposite directions and bearing on the convex face of said mounting block so as to preload the protruding portion of the die rule and said ears being covered by said flowable and settable material.

3,395,599
MUSIC BOX MOVEMENT
Remy Villiger, Sainte-Croix, Switzerland, assignor to Lador S.A., a company of Switzerland
Filed Oct. 23, 1965, Ser. No. 503,941
Claims priority, application Switzerland, Oct. 5, 196[illegible] 13,731/65
2 Claims. (Cl. 84—95)

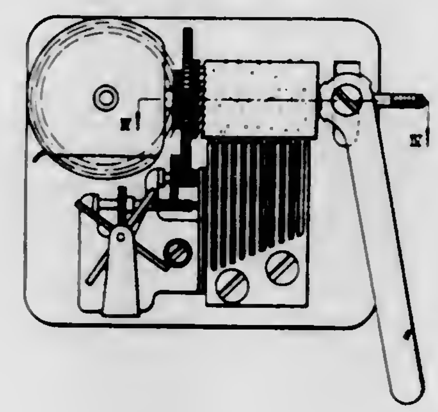

A music box having a mobile wherein a manually actuated clutch permits disconnecting the music box while maintaining the motion of the mobile.

3,395,600
APPARATUS OF KEYBOARD INSTRUCTION
Verna M. Leonard, 4575 E. Ventura Ave., Fresno, Calif. 93702
Filed May 12, 1966, Ser. No. 549,714
10 Claims. (Cl. 84—478)

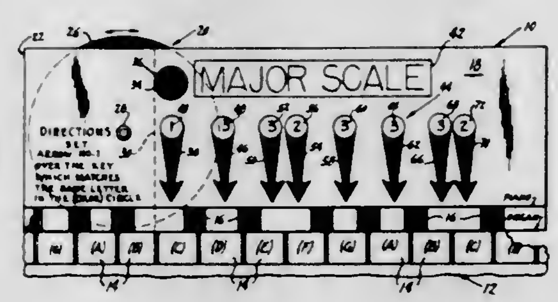

A device for facilitating keyboard instruction for placement behind the keys of a piano or the like wherein a rotatable disc having indicia thereon is provided for indicating the key in which an exercise is to be played. The key designating indicia register with an opening related

to a base indicia which is positioned immediately above the base key. A plurality of supplementary indicia indicate the remaining keys of the chord or scale which correspond to the key in which the exercise is played.

3,395,601
WINGNUT DEVICE
Terry G. Miller, Lake County, Ind.
(3622 Oakdale Drive, Gary, Ind. 46403)
Filed Aug. 31, 1966, Ser. No. 576,449
1 Claim. (Cl. 85—32)

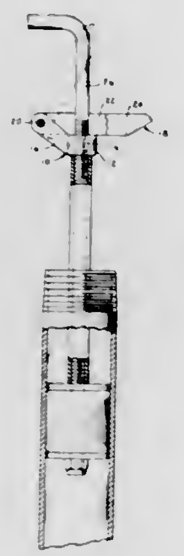

A nut for rapid manual tightening or loosening thereon on a screw shaft, provided with a radially extending and axially inclined lug, U-shaped lever pivotally connecting said lug and being movable to a diametral position relative to said nut straddling said screw shaft in order to obtain the maximum turning leverage and to utilize the screw shaft as a fulcrum. The lever is also movable toward an axial position relative to said nut, when the lever is not being used for turning, to minimize the overall diametral dimension to allow slippage over the nut device by a work piece or tool.

3,395,602
SELF-THREADING NUT
John Strange, Llanishen, Cardiff, Wales, assignor to Tinnerman Products, Inc., Cleveland, Ohio, a corporation of Ohio
Filed June 28, 1966, Ser. No. 561,159
Claims priority, application Great Britain, July 5, 1965, 28,406/65
13 Claims. (Cl. 85—32)

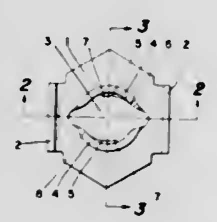

A self-threading fastening device including a base having a stud-receiving opening therein, a pair of oppositely disposed upstanding guide flanges extending upwardly from the periphery of the opening in the base, and each of the flanges including an inclined thread cutting projection formed from the material thereof. In one form, the polymeric nut-like body of polymeric material is disposed to encapsulate the device which has a bore in alignment with the opening in the base and into which the thread cutting projections extend. In another form, a deformable polymeric sealing member is disposed on the underside of the base for liquid sealing engagement with a support member.

3,395,603
ROTARY THREADED FASTENERS
Edwin J. Skierski, Wayne, N.J., assignor to Parker-Kalon Corporation, Clifton, N.J., a corporation of Delaware
Filed Sept. 13, 1966, Ser. No. 579,036
7 Claims. (Cl. 85—47)

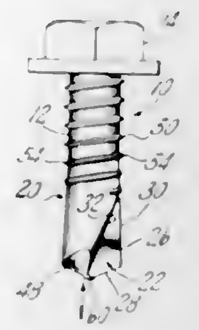

A drilling and thread forming screw comprising a trailing threaded shank and a pilot end. The pilot end has a transverse major axis and a transverse minor axis, the length of the major axis being substantially at least as great as the root diameter of the threaded shank and greater than that of the minor axis. A pair of flutes are formed in the pilot end each of which provides cutting surfaces essentially coterminal with the major axis and drag surfaces essentially coterminal with the minor axis. Lands intermediate the drag and cutting surfaces of sufficient size provide maximum reinforcement for the cutting surfaces without engaging a pilot hole cut by the cutting surfaces.

3,395,604
PLASTIC FASTENER WITH ANNULAR REBATE PORTIONS
Alan Williams, Cardiff, South Wales, assignor to Tinnerman Products, Inc., Cleveland, Ohio, a corporation of Ohio
Filed Oct. 7, 1966, Ser. No. 585,159
Claims priority, application Great Britain, Oct. 8, 1965, 42,883/65
7 Claims. (Cl. 85—82)

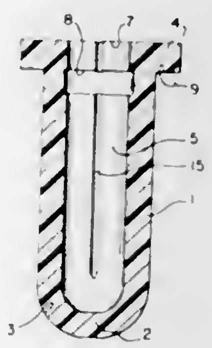

A fastening device adapted for fastening an article to an apertured panel and having a cylindrical body having a head disposed adjacent one end. A bore extends through the head into the body and is adapted to receive a stud member therein. The body has a rebate portion adjacent the head which has a reduced thickness which is adapted to be deformed to provide a shoulder on the body when the body is driven into an aperture in a panel and a stud is driven into the bore to retain the device in position in the panel.

3,395,605
TELEMETER
Giovanni Odone, Yverdon, Switzerland, assignor to Paillard S.A., Sainte-Croix, Switzerland
Filed Apr. 30, 1964, Ser. No. 363,951
Claims priority, application Switzerland, May 11, 1963, 5,925/63
4 Claims. (Cl. 88—1)

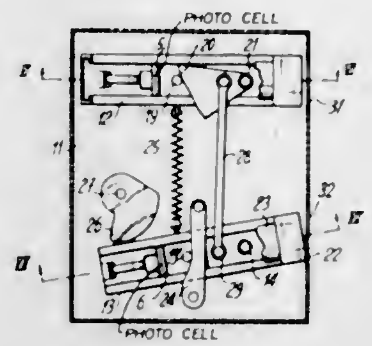

A telemeter including a dual optical system, wherein, one unit is fixed relative to the object to be photographed and the other is manually adjustable, said units including photocells adapted to receive a portion of the selected image, and means for comparing the currents fed by said cells.

3,395,606
METHOD FOR MEASURING THE DISTANCE BETWEEN TWO REFLECTORS FORMING A LASER CAVITY BY METERING BEST FREQUENCIES
Daniel L. Neill, Saginaw, Mich., assignor, by mesne assignments, to Cooper Industries, Inc., Houston, Tex., a corporation of Ohio
Filed Jan. 17, 1964, Ser. No. 338,407
1 Claim. (Cl. 88—14)

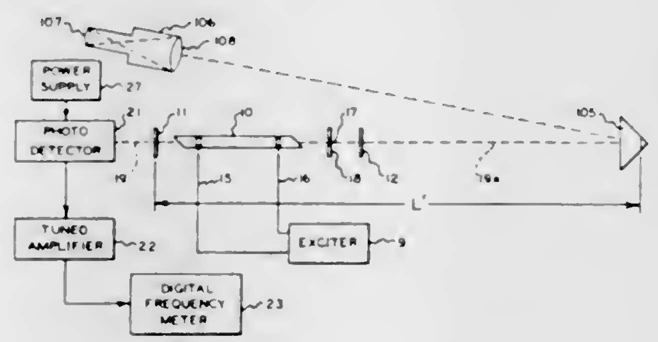

A method and apparatus for precisely measuring linear distance wherein first and second reflecting means axially bound a stimulated electromagnetic radiation source unit to define an optically resonant cavity of unknown length constituting a linear distance to be measured of greater length than the source unit in which a radiative laser beam is generated which partially passes through one of the reflecting means to play upon photodetecting means and wherein the difference frequency between adjacent frequencies at which optical resonances occur is expressed as an electrical signal and evaluated as a function of the distance to be measured.

3,395,607
STAR AND SKY SIMULATOR
George Geier, Teaneck, N.J., assignor to Keuffel & Esser Company, Hoboken, N.J., a corporation of New Jersey
Filed Mar. 23, 1964, Ser. No. 353,737
4 Claims. (Cl. 88—14)

A star and sky simulator is provided for faithfully reproducing natural variations in the ratio of starlight to skylight brightnesses and includes the separate optical systems for projecting light from a single light source and individually simulating the collimated light of a star and the diffused light of the sky. The light beams projected from the two optical systems are combined into a composite light beam which constitutes the test medium to evaluate the ac-

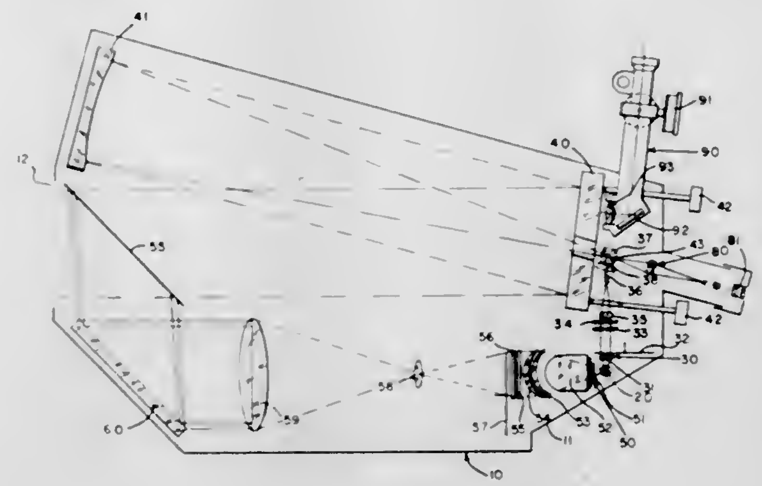

curacy of star tracking devices or the like. By use of selected wave length filters and variable light intensity attenuators in the separate optical systems, accurate reproduction of starlight and skylight may be produced and brightness ratios of these lights may be varied over a broad range.

3,395,608
APPARATUS FOR MEASURING THE ROUGHNESS OF THE SURFACE OF A WORKPIECE BY METERING THE FREQUENCY OUTPUT OF A LASER WITH THE WORKPIECE FORMING AN END REFLECTOR
Daniel L. Neill, Saginaw, Mich., assignor, by mesne assignments, to Cooper Industries, Inc., Houston, Tex., a corporation of Ohio
Continuation-in-part of application Ser. No. 338,407, Jan. 17, 1964. This application June 17, 1964, Ser. No. 375,911
11 Claims. (Cl. 88—14)

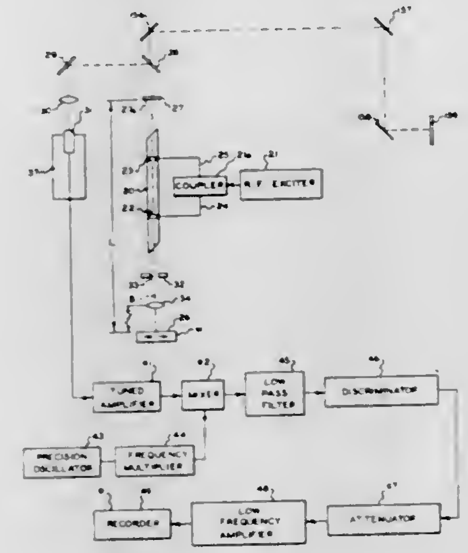

1. A measurement system including: a laser system comprising: a stimulated emission, electromagnetic radiation source, reflecting means bounding said source at one end and a workpiece capable of some reflection bounding said source at the other end to permit said source to emit a radiative energy beam; means for relatively moving said workpiece and source in a crosswise direction relative to the axis of the source; means for detecting the difference frequency between beam energy waves of differ-

ent frequencies at which cavity resonances occur; and means for monitoring the difference frequencies detected during said relative movement.

3,395,609
LIGHT METER
Wilhelm Bertram, Munich-Pasing, Germany, assignor to Ernst & Wilhelm Bertram, Fabrik Phototechnischer Messgerate, Munich-Pasing, Germany
Filed May 25, 1964, Ser. No. 369,722
4 Claims. (Cl. 88—23)

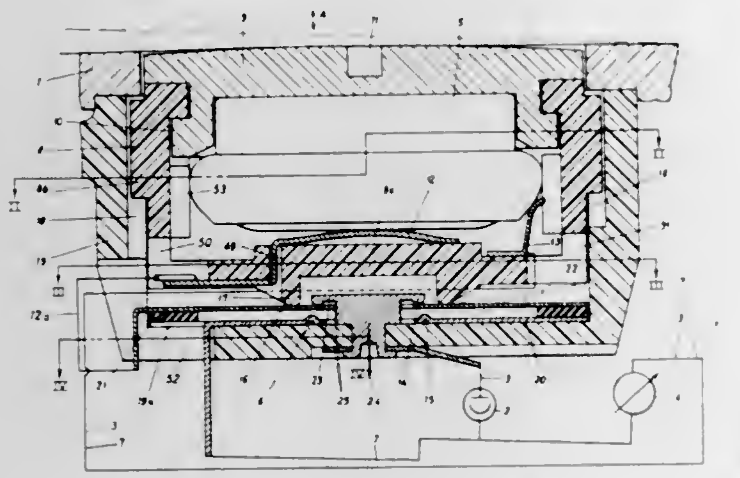

A light meter including a battery-energized circuit containing a photo resistance therein and a meter device for visually indicating light conditions. A test circuit is provided for permitting testing of the battery voltage. A manually actuated switch permits alternate connection of the battery into either the meter circuit or the test circuit.

3,395,610
ELECTROSTATIC COPYING MACHINE FOR BOOKS AND THE LIKE
Robert L. Evans and Seno Sparer, Evanston, Ill., assignors to American Photocopy Equipment Company, Evanston, Ill., a corporation of Illinois
Filed May 11, 1965, Ser. No. 454,820
21 Claims. (Cl. 88—24)

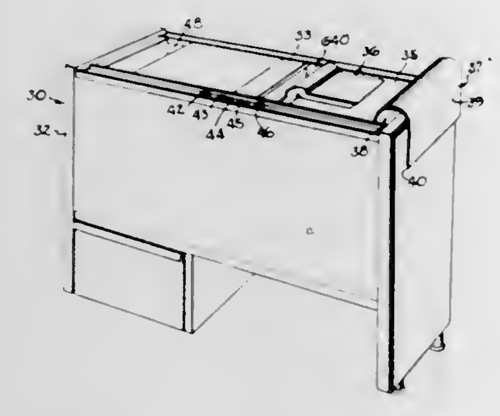

An electrostatic copy machine having a frame, a horizontal window for supporting an original at the top of the frame, a source of illumination under the window and a vertically oriented exposing station offset from the window with means to position a copy sheet therein. A 45° mirror and a lens, both having carriages are interposed between the window and exposure station. A means associated with the window defines a reference edge for placement of the original on the window and an adjustable framing member is provided opposite the reference edge. The framing member is adjustable to frame the original while simultaneously moving the lens and mirror carriages to shift the optical axis to the center of the original and maintain focus of the projected image on the copy sheet.

3,395,611
APPARATUS FOR PHOTOGRAPHIC COLOR REPRODUCTION
Edward Robert Atkinson, 366 S. Troy St., Aurora, Colo. 80010
Original application Sept. 24, 1964, Ser. No. 400,636. Divided and this application May 26, 1966, Ser. No. 553,078
8 Claims. (Cl. 88—24)

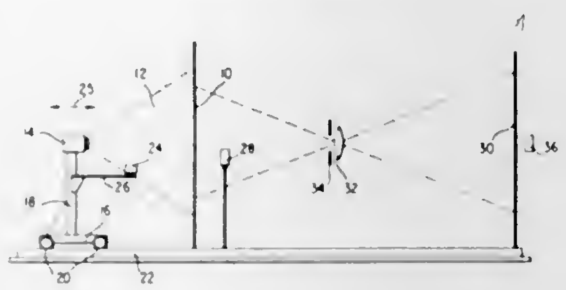

Color photoreproductions having constant color contrast and density range from color originals having varying interference factors involving an apparatus including a constant temperature, constant intensity light source, means carried by the light source for measuring the light intensity of said source, means positioned between the object and image plane for sensing the intensity of light transmitted therebetween and means for moving said light source relative to said color original to maintain the light intensity constant at the photosensitive surface at the image plane regardless of the interference factor of each original being processed. Compensation means for the different emulsion characteristics of the photosensitive surface may be selectively inserted into the light intensity sensing means at the image plane.

3,395,612
METHOD OF AND APPARATUS FOR TEMPLATING
Paul J. Serratoni, Orchard Lake, Angelo R. Serratoni, Farmington, and Dean P. Chisnell, Troy, Mich., assignors to Chrysler Corporation, Highland Park, Mich., a corporation of Delaware
Filed Nov. 10, 1966, Ser. No. 593,386
7 Claims. (Cl. 88—24)

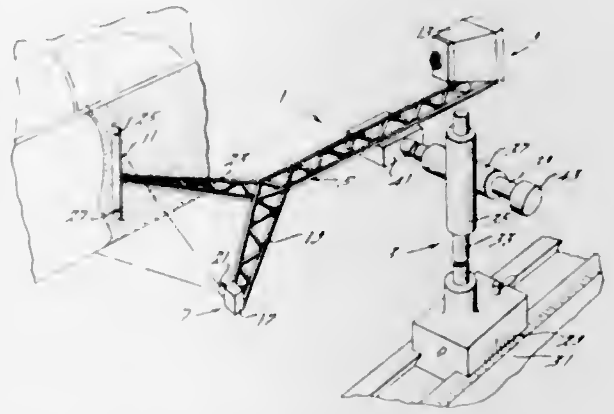

Apparatus for producing a template of the surface contour of a vehicle model including a lamp and a mask thereon for producing a shadow line on the surface of the vehicle model along a plane passing through the vehicle model. A camera for receiving an image of the contour line of the vehicle model along the shadow line. The lamp and camera being mounted for conjoint movement along a track.

3,395,613
TRIGGER MECHANISM FOR FIREARMS
Bruce W. Browning, Ogden, Utah, assignor to Browning Industries, Incorporated, Morgan County, Utah, a corporation of Utah
Filed Jan. 3, 1967, Ser. No. 606,845
1 Claim. (Cl. 89—146)

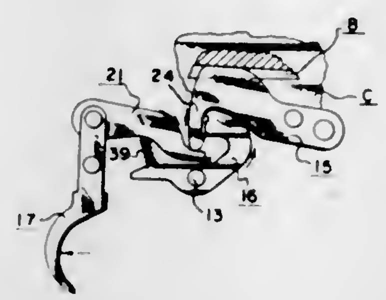

The present invention provides an improved trigger assembly for firearms wherein the hammer of the assembly is actuated directly by the returning bolt carrier of the assembly to re-cock the firing mechanism. The latter is accomplished whether the trigger has been released or remains in a depressed condition.

3,395,614
INSIDE BEAD TRIMMING APPARATUS
Richard J. Dodson, Evanston, Ill., assignor to Clayton Mark & Company, Evanston, Ill., a corporation of Delaware
Filed Oct. 19, 1965, Ser. No. 497,927
8 Claims. (Cl. 90—24)

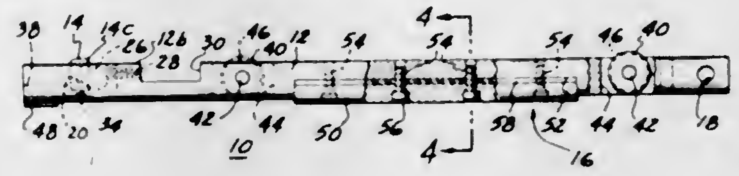

An inside bead trimming tool includes a hollow cylindrical cutting tool having a cutting edge on its forward end. The tool is supported within a recess in the arbor with its axis parallel to the axis of the arbor and with a portion of the cutting edge engagable with the inside bead. The tool is held in place by a clamp engaging the forward end of the tool, and including a recess for guiding severed bead through the hollow tool. A pair of guide wheels engage the tubing wall and span the bead to hold the tool and bead in alignment. The rollers are mounted adjacent opposite ends of a tension pad which slides along the wall of the tubing opposite the head, and a sheet of resilient material sandwiched between the tension pad and the arbor resiliently forces the guide wheels and the cutting tool toward the bead.

3,395,615
SERVO MONITORING CONTROL APPARATUS
John C. Taylor, Golden Valley, Minn., assignor to Honeywell Inc., a corporation of Delaware
Filed Mar. 18, 1963, Ser. No. 265,795
19 Claims. (Cl. 91—363)

9. In control apparatus having a plurality of servomotors for operating a controlled member: a plurality of electrical signal sources; means operated jointly by all signal sources supplying a control signal to each servomotor whereby each motor is controlled by all signal sources; monitoring means comparing the signals from all signal sources; and means controlled by the monitoring means upon a discrepancy existing in one less than the plurality of signals thereby indicating a discrepancy in the one

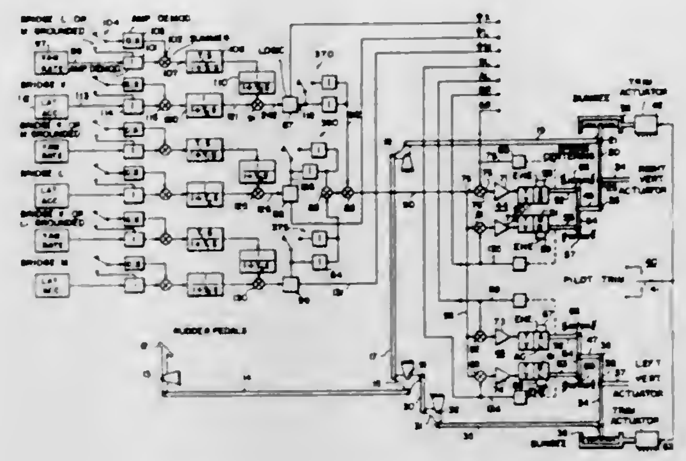

less than the plurality of signal sources rendering all servomotors ineffective simultaneously to operate the member.

3,395,616
SELF-ADVANCING MINE ROOF SUPPORTS
Walter Lubojatsky, Recklinghausen, Germany, assignor to Gullick Limited, Wigan, England, a British company
Filed Dec. 12, 1966, Ser. No. 600,984
Claims priority, application Germany, Dec. 22, 1965, B 85,095
10 Claims. (Cl. 91—412)

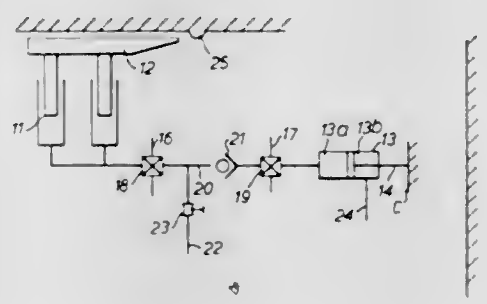

1. A self-advancing mine roof support comprising a base, hydraulically extensible leg means on said base, a roof-engaging structure mounted on said leg means so as to be applied thereby to the roof, a hydraulic ram means operative to advance the support and means for connecting the leg means to the hydraulic circuit of the ram means so that the leg means, during advance of the support, is subjected to fluid-pressure, to maintain the roof-engaging structure against the roof, dependent on the resistance to advance of the support.

3,395,617
SERVO MOTOR FOR POSITIONING A VALVE AS A FUNCTION OF ENGINE LOAD
Robert E. Kaptur, Birmingham, Mich., assignor to Ford Motor Company, Dearborn, Mich., a corporation of Delaware
Filed Aug. 30, 1965, Ser. No. 483,753
7 Claims. (Cl. 91—443)

A semi-automatic fluid pressure control system to disengage a vehicle driveline clutch prior to a gear ratio change, and to control the rate of reengagement of the clutch after the gear ratio change has been made as a function of engine load as indicated by the level of the engine intake manifold vacuum. A manually operated push button, when depressed, subjects a pair of diaphragm

type motors to engine intake manifold vacuum to move a pilot valve to a position to permit fluid to then move a shift valve to a position to where fluid can be supplied to the clutch servo to disengage it. Depending upon the

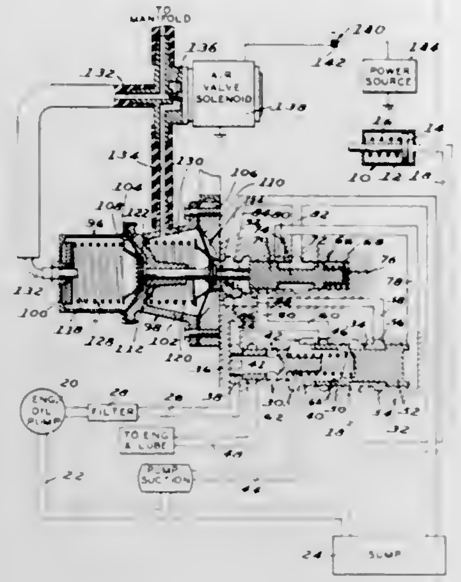

engine load at time of reengagement, when the push-button is released, the pilot valve will either return to an unrestricted vent position to effect the fast emptying of the clutch servo of fluid, or to a position where the servo apply fluid must vent through a restriction in the line.

3,395,618
OPERATOR DEVICES
John V. Fredd, Dallas, Tex., assignor to Otis Engineering Corporation, Dallas, Tex., a corporation of Delaware
Original application May 28, 1965, Ser. No. 459,843, now Patent No. 3,315,568, dated Apr. 25, 1967. Divided and this application Aug. 24, 1966, Ser. No. 591,066
5 Claims. (Cl. 92—24)

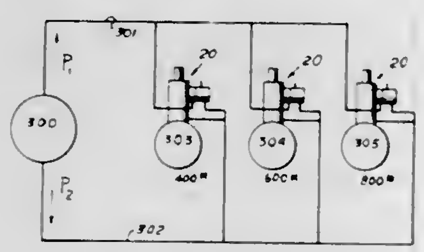

A fluid pressure controlled system for accomplishing actuation of selected ones of a plurality of operator mechanisms or devices in response to predetermined pressure differential signal conditions or combinations, said operator devices being normally locked against movement and releasable upon application of such predetermined pressure differential signal condition or combination to said operator device to release the same for movement, and continued application of pressure to said operator device effects movement thereof to accomplish the work function. A plurality of devices are connected in flow communication for selective operation of a predetermined one of said devices.

3,395,619
HYDRAULIC PROPPING APPARATUS WITH AUTOMATIC OVERLOAD PROTECTION MEANS
Konrad Grebe, Auf dem Nutzenberg 1, Wuppertal-Elberfeld, Germany
Filed Dec. 6, 1965, Ser. No. 511,645
7 Claims. (Cl. 92—51)

Hydraulic propping apparatus consisting of two telescoping prop members having an intermediate tubular member disposed therebetween and a movement-resisting means disposed between the intermediate member and the outer propping member. The intermediate member

is hydraulic fluid actuatable both with respect to the inner propping member and the outer propping member and will move outward in response to an inward overload movement of the inner propping member.

3,395,620
SCREW MEANS FOR ATTACHING MOUNTING BRACKETS AND CYLINDER HEADS TO A POWER CYLINDER BODY
Ralph F. Schmoeger, Lexington, Ky., assignor to Westinghouse Air Brake Company, Wilmerding, Pa., a corporation of Pennsylvania
Filed Apr. 19, 1966, Ser. No. 543,612
3 Claims. (Cl. 92—161)

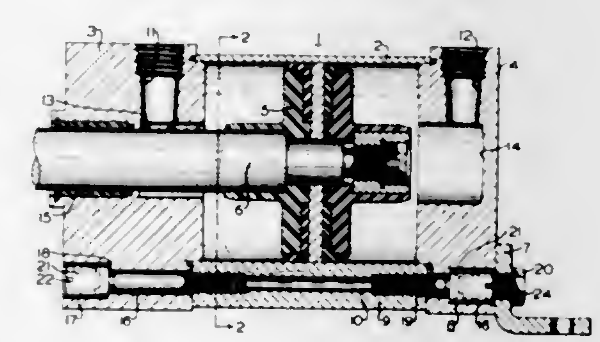

Screw means for attaching mounting brackets and cylinder heads to a power cylinder body in which a first screw attaching the cylinder head to the power cylinder body has a head fully inserted in a counterbore in the cylinder head, which head includes a threaded axial bore receiving therein a cap screw attaching a bracket to the cylinder head. Where the cylinder head is of low tensile strength prone to stripping, the screws are comprised of material having a higher tensile strength than the cylinder head.

3,395,621
HYDRAULIC CYLINDER SUPPORT
Helmut Peters, Milwaukee, Wis., assignor to Nordberg Manufacturing Company, Milwaukee, Wis., a corporation of Wisconsin
Filed Mar. 17, 1966, Ser. No. 535,216
1 Claim. (Cl. 92—169)

A vertically axised hydraulic cylinder, for use with the frame and crushing head of a vertically axised gyratory crusher. The cylinder has an integral flange at its top

with a plurality of integral bosses formed between the flange and the cylinder. A bottom plate closes the lower

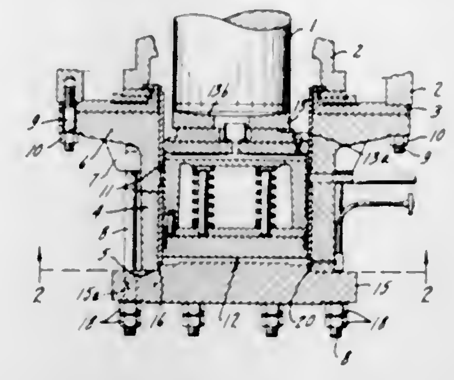

end of the cylinder and is held in place by a plurality of tie rods screwthreadedly secured to the bosses.

3,395,622
SATCHEL BOTTOM BAG MANUFACTURE
Emanuel Kugler, 124 Richmond Place, Lawrence, N.Y. 11559
Filed May 1, 1967, Ser. No. 635,085
3 Claims. (Cl. 93—35)

A method of mass producing plastic bags wherein for each bag the segregated compartments of a bottom gusset are held apart during the heat sealing and thus formation of the side edges thereon which, with a forty-five degree orientation to said side edges, produces a desirable so-called satchel bottom on each bag.

3,395,623
LIQUID-TIGHT CONTAINER AND METHOD OF FORMING SAME
Theodore C. Baker, New Canaan, Conn., assignor to Continental Can Company, Inc., New York, N.Y., a corporation of New York
Filed Dec. 8, 1964, Ser. No. 416,797
12 Claims. (Cl. 93—36.01)

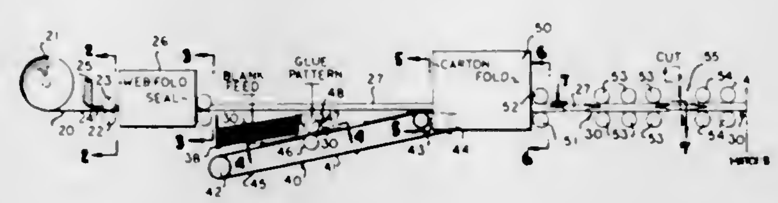

1. A method of forming liquid tight containers comprising the steps of providing a length of flattened liquid proof tubing, applying flat box blanks to said tubing at regularly spaced intervals, folding the flat box blanks around said tubing and connecting together remote edges thereof and connecting said box blanks to said tubing, severing the tubing intermediate the box blanks, opening each box blank and the associated length of tubing, sealing one end of the tubing length, folding the sealed end of the tubing into the adjacent end of the box body, and closing the adjacent end of the box body with the flaps at the adjacent end.

3,395,624
DEVICE FOR FOLDING FLAPS OF ENVELOPES AND THE LIKE
Peter Seyl, Irlich (Rhine), Germany, assignor to Winkler & Dunnebier Maschinenfabrik und Eisen-Giesserei, Neuwied am Rhine, Germany, a firm of Germany
Filed Oct. 11, 1966, Ser. No. 585,862
Claims priority, application Germany, Jan. 18, 1966, W 40,742
3 Claims. (Cl. 93—61)

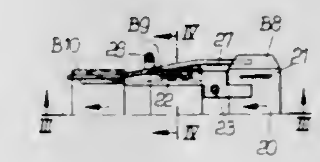

1. In an apparatus for folding a scored flap of a movable envelope or the like over a glue-carrying portion of the envelope, a folding knife engaging said envelope and having a recessed portion extending in the direction of movement of said envelope, said glue-carrying portion moving into said recessed portion and then emerging out of said recessed portion without contacting said knife during the movement of said envelope, and a curved arm extending adjacent said folding arm and engaging said flap during the movement of said envelope for raising said flap and then folding it over said glue-carrying portion after the glue-carrying portion emerged out of said recessed portion.

3,395,625
ANCHORED SYNTHETIC TURF
Howard M. Blanchette, Pensacola, and William R. Osban, Gulf Breeze, Fla., assignors to Monsanto Company, St. Louis, Mo., a corporation of Delaware
Filed Mar. 4, 1966, Ser. No. 531,662
2 Claims. (Cl. 94—7)

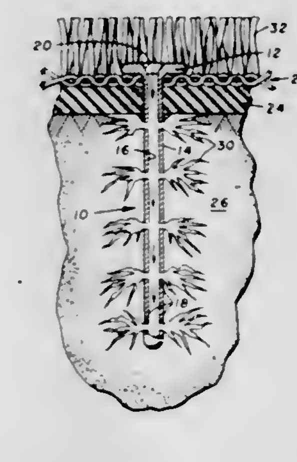

A fastening device for anchoring a synthetic turf to a base wherein the synthetic turf is positioned, wrinkle-free, on a base and tubular members having an enlarged head at one end and closed at the other end are inserted thru prepunched holes in the turf and driven into the base. A solidifiable synthetic resin in liquid state, is injected into the tubular members and forced thru spaced apertures in the walls of the tubular members into crevices in the base. The enlarged heads overlying the turf and fingers of solidified resin penetrating the crevices in the base firmly anchor the turf to the base.

3,395,626
SOIL COMPACTING MACHINE
Gordon O. Garis, Golden Valley, Pa., and Raymond F. Roettger, Plymouth, Minn., assignors to Raygo, Inc., Minneapolis, Minn., a corporation of Minnesota
Filed Jan. 13, 1966, Ser. No. 520,449
5 Claims. (Cl. 94—50)

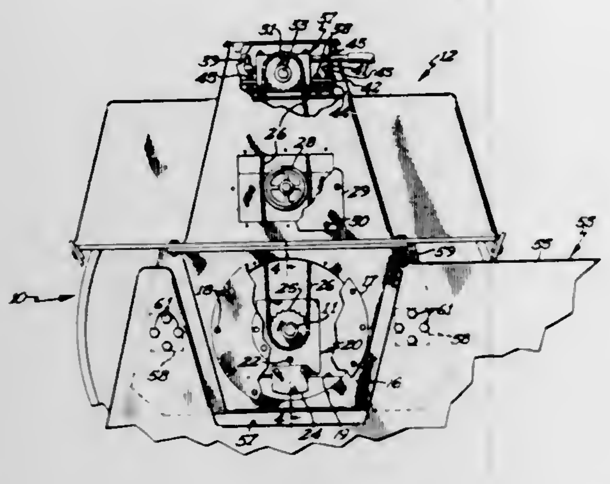

A ground-engaging roller has coaxial journals at its opposite ends rotating in bearings carried by a frame portion of the machine. Freely rotatably mounted on each of the journals is an eccentric weight, rotation of which imparts vibration to the roller. The eccentric weights are enclosed within housings formed in the frame. Opposite walls of these housings which are transverse to the axis of the journals mount the bearings in which the journals turn. These bearings have open communication with the interior of the housings so that oil contained in the housings and splashed about by rotation of the eccentric weights lubricates the bearings.

The eccentric weights are driven at high speed by a hydraulic motor which is drivingly connected with both of the weights by disconnectible power transmission means, disconnection of which enables the phase relationship of the weights to be altered, and reconnection holds the eccentric weights in selected phase relationship and enables both to be driven in unison by the hydraulic motor in any desired phase relationship.

3,395,627
CONTRACTION JOINT STRIP AND METHOD AND APPARATUS FOR INSTALLING THE SAME
Robert M. Barton, Normal, Ill.
(Lincoln and North Sts., Towanda, Ill. 61776)
Filed Mar. 30, 1966, Ser. No. 538,718
3 Claims. (Cl. 94—51)

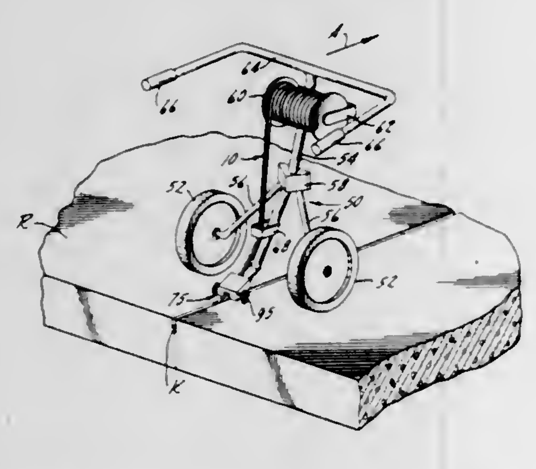

Sealing strip apparatus and a method for installing the sealing strip in the expansion joint of concrete slabs wherein a tube slidably engages a bead on the bottom of the sealing strip so as to progressively pull the strip into an expansion joint.

3,395,628
EXPOSURE DEVICE
George R. Kautz and Clarence J. Lawson, Seneca Falls, N.Y., assignors to Sylvania Electric Products Inc., a corporation of Delaware
Filed Mar. 1, 1965, Ser. No. 435,991
18 Claims. (Cl. 95—1)

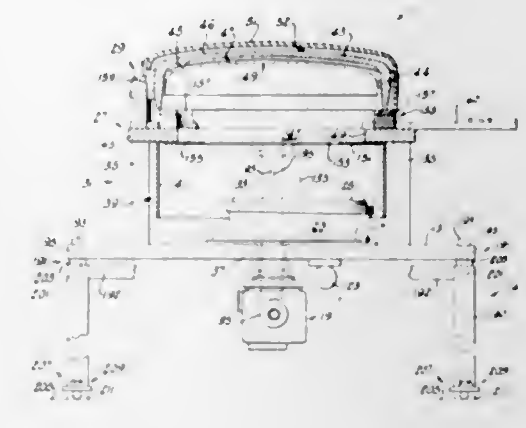

A device for exposing cathode ray tube sensitized screens to provide discrete screen patterns through an appropriate negative mask during the manufacture of color tubes. Exposure radiation emanating from a light source passes through movable shutter means and a light refractive medium to impinge the sensitized panel adjustably spaced thereabove. The light source enclosure comprises a lamp and a related reflector having enhanced cooling means and associated improved muffler means. A rotatable stage, formed to provide definite positioning of the optical system to effect angular light exposure of the screen through the related negative mask, accommodates the light source therebelow, the light refractive medium thereabove, and the shutter means therebetween. Three point suspension of the stage base portion imparts stabilizing support to the exposure structure to eliminate torsional stress therein to provide optimum performance of the optical system.

3,395,629
SUPERIMPOSING PHOTOGRAPHIC DEVICE
William Salvesen, 1214 71st St., Brooklyn, N.Y. 11228
Filed May 15, 1964, Ser. No. 367,711
6 Claims. (Cl. 95—1.1)

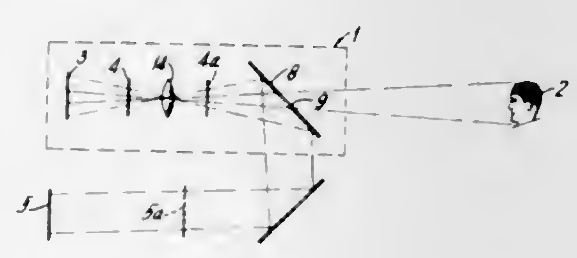

1. A photographic device adapted to superimpose non-overlapping images on a single photosensitive surface for simultaneous photographing comprising a reflecting surface adapted to reflect an object on said photosensitive surface, the opposite surface of said reflecting surface being opaque, and said reflecting surface having a transparent area having a pre-selected position adapted to allow light from another differently positioned element to reach said photosensitive surface, lens means interposed between said reflecting surface and said photosensitive surface and means adapted to control a selected exposure of said photosensitive surface.

3,395,630
CAMERA FOR USE WITH ARTIFICIAL-LIGHT FILM
Gerhard Haufler, Stuttgart-Sonnenberg, Albert Schnell, Stuttgart-Wurttemberg, and Friedrich Schwelkhardt, Warmbronn, Wurttemberg, Germany, assignors to Eugen Bauer GmbH, Stuttgart - Unterturkheim, Germany
Filed July 6, 1965, Ser. No. 469,750
Claims priority, application Germany, July 7, 1964, B 77,555
21 Claims. (Cl. 95—11)

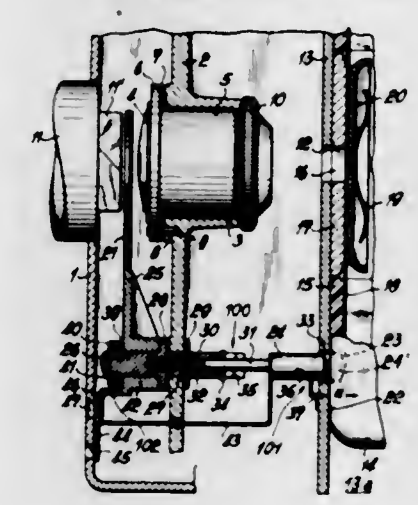

A movie camera for use with lamplight film which is furnished in two types of magazines. A single corrective filter is moved across the path of incident light when one of the magazines is inserted into the housing of the camera to permit exposures in daylight. The filter is movable by hand into and from the path of incoming light so that the camera can be used in daylight or artificial light regardless of which magazine is inserted into the housing. The mechanism for moving the filter independently of the one magazine is installed in the camera.

3,395,631
THERMAL DEVELOPING APPARATUS
Richard E. Smith, Webster, N.Y., assignor to GAF Corporation, a corporation of Delaware
Filed June 24, 1965, Ser. No. 466,773
5 Claims. (Cl. 95—77.5)

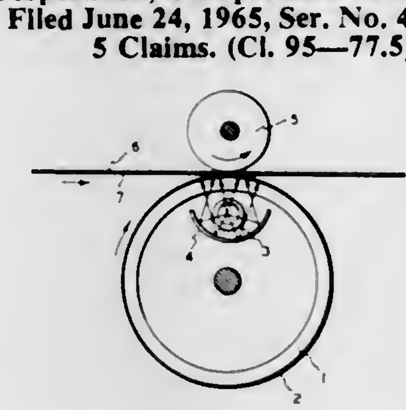

An infra-red source is located inside a glass cylinder adjacent a restricted portion of the cylinder to concentrate heat at sheet material passing in contact with the cylinder. An external metallic coating prevents passage of certain radiation through the cylinder while conducting heat.

3,395,632
LAYING OUT OF PRINTED CHARACTERS SUCH AS LETTERS OR NUMERALS
Harold M. Pook, 56 Whitcomb St., London, England
Filed Nov. 10, 1965, Ser. No. 507,129
Claims priority, application Great Britain, Nov. 16, 1964, 46,484/64
4 Claims. (Cl. 95—85)

For use in the laying out of printed letters, numerals or other characters, a lay-out board adapted to accommodate a lay-out to be arranged, a plurality of characters arrangeable in any required combination, the lay-out board having a magnetized surface and the characters being formed on sheet material by a coating including metallic matter capable of being influenced by a magnetic field,

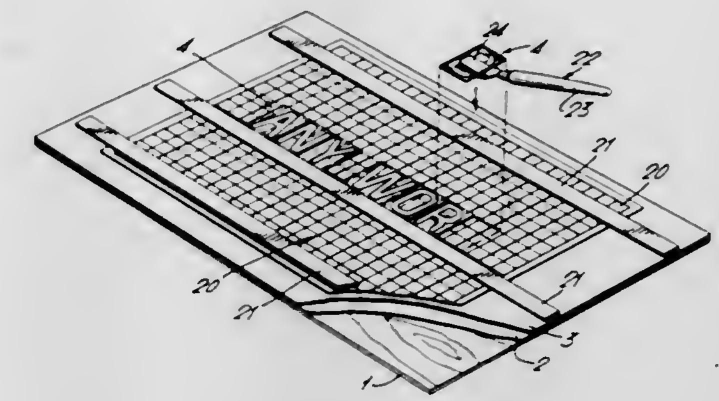

and a receptor sheet made of a transparent preferably synthetic plastic material which on being placed over the lay-out board, with characters arranged thereon, produces a combined electrostatic and suction effect between itself and the characters so that when lifted again it will draw the characters with it, still in their arranged condition.

3,395,633
AIR MIXING DEVICE
Robert M. Warren, Jr., Lincroft, N.J., and Mark H. Kornhauser, Rockaway Beach, N.Y., assignors to Buensod-Stacey Corporation, New York, N.Y., a corporation of Ohio
Filed Aug. 22, 1966, Ser. No. 574,072
6 Claims. (Cl. 98—38)

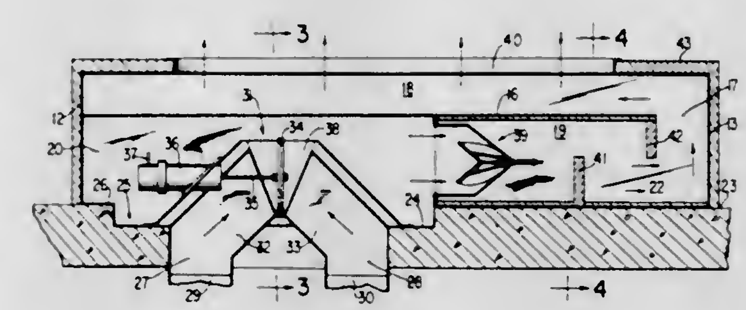

An air conditioning unit of the low silhouette type having an upper and lower compartment, whereby the hot and cold incoming air is mixed then diverted laterally in the lower compartment through a volume control thence through the partition leading to the upper compartment and subsequently to the outlet.

3,395,634
COFFEE ROASTING APPARATUS
Horace L. Smith, Jr., Richmond, Va., assignor to Hupp Corporation, Cleveland, Ohio, a corporation of Virginia
Original application Jan. 15, 1965, Ser. No. 425,702, now Patent No. 3,345,180, dated Oct. 3, 1967. Divided and this application Sept. 7, 1966, Ser. No. 577,673
17 Claims. (Cl. 99—236)

Apparatus for treating particulate solids including at least one pressurizable, isolatable reaction vessel and a closed circulation system for a treating fluid which may include a chaff separating and collecting system, an arrangement for varying the flow rate and temperature of the fluid supplied to the reaction vessel, an arrangement for venting the vessel in which vessel pressures are

equalized to minimize stresses on internal components, and an arrangement for separating evolved volatiles from

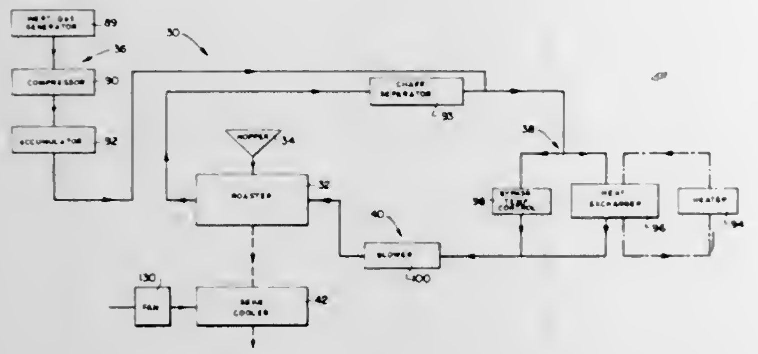

recirculated treating fluid together with an inert gas generator, if desired.

3,395,635
LAUTER TUB
Henry C. Gartner, Richboro, Pa., assignor to Acme Process Equipment Co., Oreland, Pa., a corporation of Pennsylvania
Filed Mar. 10, 1967, Ser. No. 622,138
14 Claims. (Cl. 99—275)

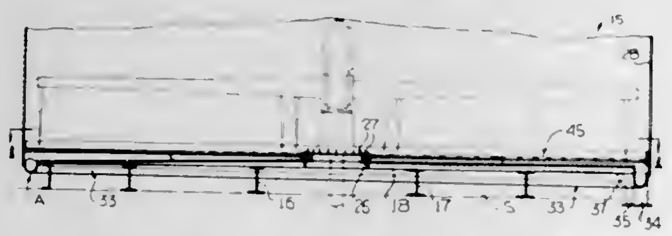

A lauter tub which facilitates the rapid and constant removal of the wort in a manner which reduces undesirable bacteria growth and foaming, and permits simplified flushing, cleaning and inspection. A bottom wall of the tube terminates at a peripheral trough which is inclined in clockwise and counter-clockwise directions as viewed in top plan from a point diametrically opposite a discharge opening toward the discharge opening. Nozzle means are disposed diametrically opposite the discharge opening for introducing water or cleaning solution in both directions, while a readily removable sectional false bottom facilitates the rapid inspection of the trough and reduces down time for inspection and/or repair.

3,395,636
CONSTRUCTION OF ROLL FOR MACHINERY
Ralph A. Hess, Medfield, Mass., assignor to SW Industries, Inc., Newton, Mass., a corporation of Massachusetts
Filed Apr. 27, 1966, Ser. No. 545,597
8 Claims. (Cl. 100—93)

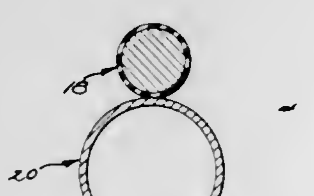

In a roll construction comprising a metallic core and an elastomeric covering, it has been found that a network of dispersed carbon particles serves to conduct heat, that is generated by deformation of the elastomeric covering, from the elastomeric covering to the metallic core, which operates as a heat sink.

3,395,637
LOAD CARRIER FOR A LOG SKIDDING SULKY
Lars Bengt Larsson and Gustaf Ingemar Johansson, Soderhamn, Sweden, assignors to Ostbergs Fabriks AB, a Swedish joint-stock company
Filed Jan. 18, 1967, Ser. No. 610,102
Claims priority, application Sweden, Jan. 18, 1966, 627/66
6 Claims. (Cl. 100—212)

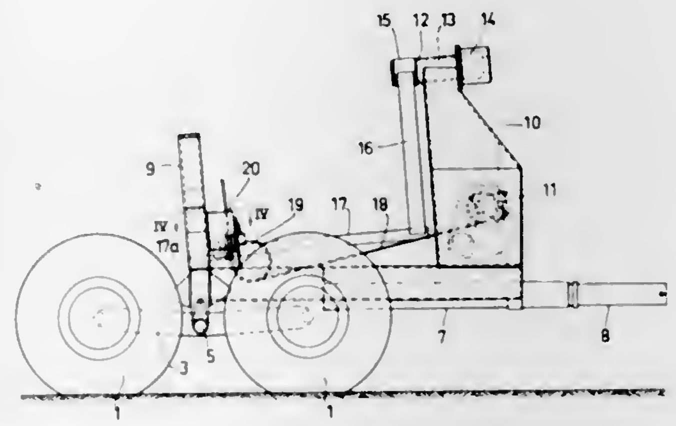

A load carrier for a log skidding sulky of the bogie type, having a rotatable shaft extending in parallel with the longitudinal axis of the sulky, includes an arm rotatable about said shaft, a jib backwardly projecting from said shaft, and means for enfolding a log bundle, one end of which rests on a support member of the carrier, including a cable and means for tightening the cable about the end of a log. The log bundle can swing laterally with respect to the sulky.

3,395,638
IMPRESSION CYLINDER CONSTRUCTION TO PREVENT STREAKING IN LETTERPRESS
Ludwig Kirkus, Chicago, and Louis S. Tyma, Hinsdale, Ill., assignors to Miehle-Goss-Dexter, Incorporated, Chicago, Ill., a corporation of Delaware
Filed Aug. 13, 1965, Ser. No. 479,423
7 Claims. (Cl. 101—216)

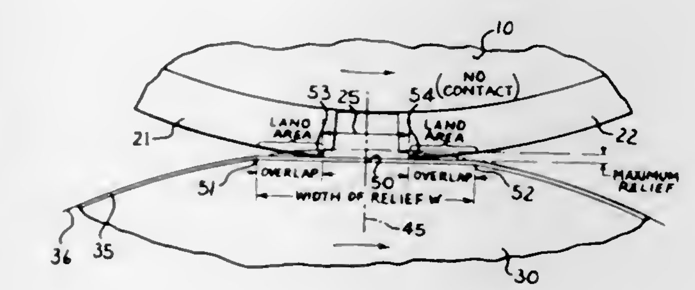

A printing couple for a letterpress in which the impression cylinder is of non-circular contour having a relief in the form of a flattened strip extending longitudinally thereon tapering to zero thickness at its lateral edges which is so phased as to be generally centered with respect to the gutter between adjacent plates and which has a width which is substantially greater than the width of the gutter to provide a more gradual buildup and decay of pressure at the leading and trailing edges of the plate. In one embodiment the relief is in the form of a shallow, axially extending groove formed in an underlayment.

3,395,639
METHOD OF WEBBING A NEWSPAPER PRINTING PRESS
George B. Swan, 505 Hicks St., Brooklyn, N.Y. 11201
Filed Nov. 16, 1966, Ser. No. 594,723
1 Claim. (Cl. 101—426)

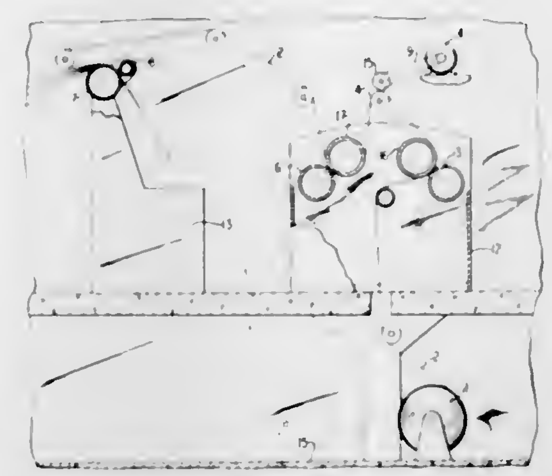

A method of webbing a multipress unit newspaper printing press wherein each press unit is webbed while the printing press is idle and the printing plates are not on the type rollers.

3,395,640
SEA WATER TRIGGERED ELECTRICAL ENERGY SOURCE
James W. Taylor, Pasadena, Calif., assignor to the United States of America as represented by the Secretary of the Navy
Filed May 17, 1967, Ser. No. 640,451
5 Claims. (Cl. 102—16)

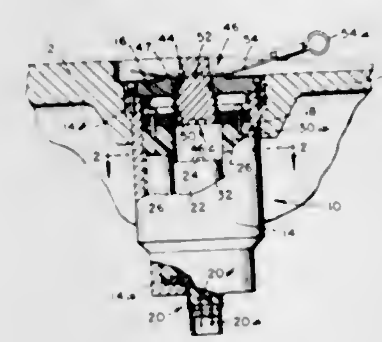

An integrally housed electrical power source is adapted to be automatically triggered by a sequence of events consisting of pulling a lanyard and immersion in normally saline ocean water. The housing contains a small thermal battery wired to charge a bank of capacitors. The thermal battery is of the type activated by a percussion cap and is mounted in the housing with the percussion cap confronting a seawater port. In the initial (locked) condition of the device, a spring loaded hammer is locked in place in the seawater port by a locking pin through an aperture in a portion of the hammer which projects from the exterior of the housing. When the locking pin is removed from its aperture, by pull of the lanyard, the spring impells the hammer against the percussion cap and activates the thermal battery, which in turn charges the capacitor bank. A seawater conductivity switch is disposed in the housing and is connected in an electronic relay circuit for discharging the capacitors through the output terminals of the device. This serves to trigger the device's output in response to the entry of water into the interior of the housing after the device is immersed. The entire structure is arranged for exceptional compactness.

3,395,641
REMOTELY CONTROLLED TUNNEL EXPLORATION AND DESTROYING MEANS
Nelson A. Frost, 232 Mill St., Byram, Conn. 10573
Filed Oct. 26, 1966, Ser. No. 589,661
9 Claims. (Cl. 102—19)

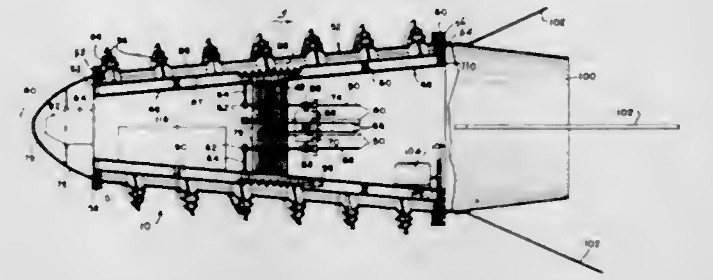

A self-propelled, controllable tunnel exploration device particularly adapted for use in warfare and including an elongated body having head and tail portions and an intermediate flexible, pressure expansible sleeve including a spiral fin and means for rotating the fin to advance the device through tunnels, the device carrying television surveillance means and, optionally, explosives, means being provided on the body for preventing rotation thereof as the sleeve is rotated to advance the device.

3,395,642
EXPLOSIVE CONTAINER
Stephen F. Foster, Hopatcong, N.J., and John F. Hamilton, Wilmington, Del., assignors to Hercules Incorporated, Wilmington, Del., a corporation of Delaware
Filed Sept. 6, 1966, Ser. No. 577,448
2 Claims. (Cl. 102—24)

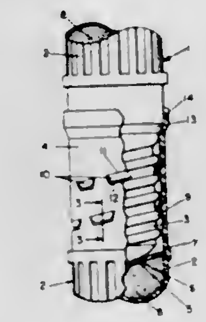

This invention relates to a blow-molded plastic container for explosives that has external thread means at one end and an internal thread means at the other end for connecting a plurality of like containers together end-to-end to form an explosive column, the invention being characterized in that the internal thread means comprises inwardly bent tabs punched from the side wall of a tubular end portion, which tabs are deflected by the threads of the externally threaded end when it is inserted endwise into the tubular end portion to provide a quick-couple between two containers and to cooperate with the threads to define a threaded connection for tightening and releasing the two containers.

3,395,643
FLUID ENERGY TRANSLATING DEVICE
Charles H. Whitmore, Savage, Minn., assignor to Continental Machines, Inc., Savage, Minn., a corporation of Minnesota
Filed Nov. 14, 1966, Ser. No. 593,893
9 Claims. (Cl. 103—5)

8. In a rotary fluid energy translating device comprising commonly driven first and second stage pumps each having an inlet and a high pressure outlet, a housing with

opposing front and rear interior walls, pressure fluid transfer means including a rotor confined between said opposing walls and carried by a shaft which is journalled in the housing, the front interior wall in each housing having ports connecting with the inlet and outlet thereof and through which fluid can be delivered to and received from the fluid pressure transfer means in said housing, and the second stage rotor being subjected to a strong rearward thrust under the force of pressure fluid at its high pressure outlet:

(A) means defining a rear chamber in the second stage pump housing, into which the rear portion of the second stage shaft projects;

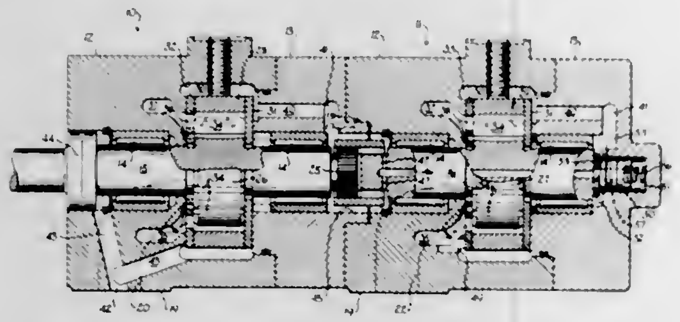

(B) means by which the inlet of the second stage pump and said rear chamber thereof are communicated with and pressurized by fluid from the outlet of the first stage pump;

(C) means defining a meteringly restricted exhaust passage for conducting fluid from said rear chamber;

(D) and means at the rear of the second stage shaft for translating pressure of fluid in said rear chamber into a forward axial thrust upon the second stage shaft and its rotor, of a value substantially equalling said rearward thrust thereon.

3,395,644
MOTOR PUMP UNIT
Grant Grebel, St. Joseph, and Roger J. Kinnavy, Benton Harbor, Mich., assignors to Sta-Rite Products, Inc., Delavan, Wis., a corporation of Wisconsin
Filed June 16, 1966, Ser. No. 558,013
5 Claims. (Cl. 103—87)

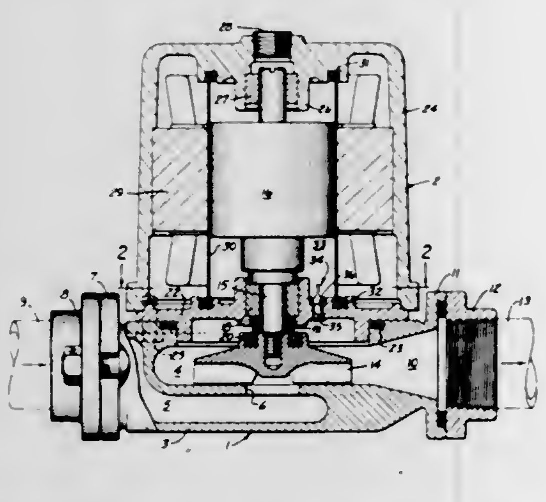

The invention relates to a motor-pump unit for use in a closed water pumping system which prevents the build-up of magnetite on the liner and other elements in the motor chamber. The unit includes a dynamic face-type seal for the rotor shaft in which the shaft is provided with a shoulder adapted to engage, and seal against, the inner end of the bearing during conditions of outward thrust. In addition, the impeller, which is carried by the shaft, is provided with a sealing ring and under conditions of inward thrust, the ring is adapted to bear against the outer end of the bearing to provide a seal.

Under non-operating, no-thrust conditions, the ends of the bearing are spaced from the respective sealing members so that small amounts of water can pass through the seal faces and along the shaft to make up for minute quantities of water lost from the rotor chamber due to leakage through static seals.

In addition, a check valve is provided between the rotor chamber and the pumping chamber and under conditions of continuous operation of the pump, the check valve permits the flow of small amounts of water from the pumping chamber to the rotor chamber to make up for leakage.

ERRATUM

For Class 103—103 see:
Patent No. 3,395,649

3,395,645
SHAFT SEAL ASSEMBLY
Andre Vilet, Sceaux, France, assignor to Societe d'Etude de la Propulsion Par Reaction (Societe Anonyme) Villejuif, France
Filed Sept. 6, 1966, Ser. No. 577,283
Claims priority, application France, Sept. 14, 1965, 31,398
8 Claims. (Cl. 103—111)

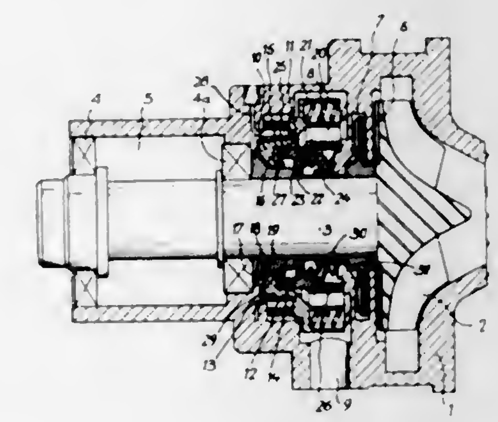

Sealing means for a shaft assembly to prevent the passage of fluid from a first zone to a second zone, comprising means between the zones rigid with the shaft defining a first sealing surface and additional means defining second, third, and fourth sealing surfaces. Resilient means biasing the second sealing surface into engagement with the first sealing surface are also provided along with further resilient means biasing the fourth sealing surface into engagement with the third sealing surface when the shaft is at rest. Fluid pressure means are utilized during shaft rotation to disengage the sealing surfaces, along with pump means between the zones attached to the shaft and operable when the shaft is rotating to create fluid pressure opposing the passage of fluid from the first to the second zone.

3,395,646
HYDRAULIC GEAR PUMPS AND MOTORS
Robert Jean Joseph Gelin, Lyon, France, assignor to Societe Industrielle de Mecanique Appliquee S.I.G.M.A., Paris, France
Filed Feb. 7, 1966, Ser. No. 525,396
Claims priority, application France, Feb. 16, 1965, PV 5,807
9 Claims. (Cl. 103—126)

The gears are carried, on at least one of their sides, by rigid bearings movable in the axial direction, and means are provided for urging these bearings towards the sides of the corresponding gear. Abutment means, such as shoulders, limit the minimum distance between the side surfaces of the two bearings associated with each gear to

a value slightly greater than the width of that gear, whereby there is always a minimum clearance between the flanks

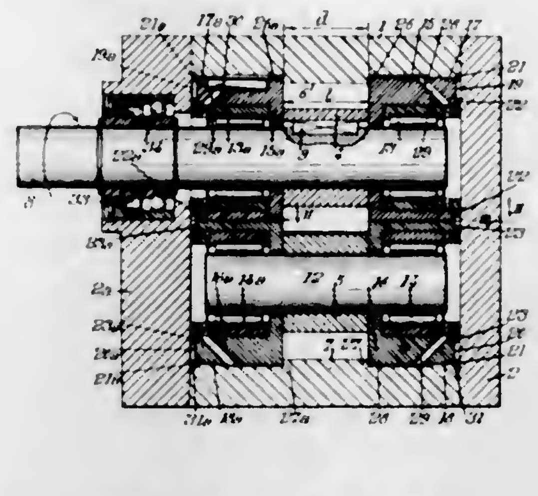

or side surfaces of the gears and the adjacent side surfaces of their corresponding bearings.

3,395,647
JET PUMP
William J. Clabaugh, Los Gatos, Calif., assignor to the United States of America as represented by the United States Atomic Energy Commission
Filed Nov. 21, 1966, Ser. No. 596,014
4 Claims. (Cl. 103—278)

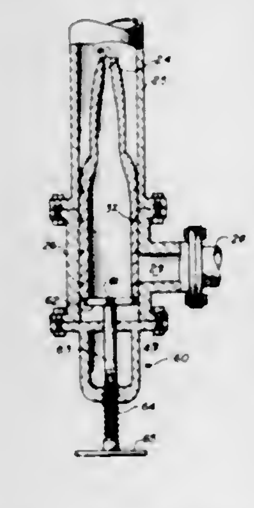

A jet pump having a readily removable nozzle. The nozzle is slideable within an injection conduit and is held in operative position within said conduit by fluid pressure. The jet pump is further provided with check valve means to prevent fluid back flow through said nozzle and injection conduit.

3,395,648
MOVING SIDEWALK
Willis Ford Karr, Warren, and Saul Le Vine, Southfield, Mich., assignors, by direct and mesne assignments, to Federal Engineering Company, Detroit, Mich., a corporation of Michigan
Continuation-in-part of application Ser. No. 423,267, Jan. 5, 1965. This application June 4, 1965, Ser. No. 461,232
8 Claims. (Cl. 104—25)

1. A conveyor section, comprising: an elongated base member; a plurality of stationary rolls disposed at spaced intervals adjacent to the base member so that a line passing perpendicularly to the axis of all the stationary rolls defines a closed course interior of the perimeter of the base; a plurality of pallets each having one convex and an opposed concave edge; link members each rigidly connected to one of the pallets and pivotally connected to an adjacent pallet so as to join the pallets into a continuous chain with the convex edge of one pallet in mating engagement with the concave edge of an adjacent pallet each of said pallets having an underside engaging with said stationary rolls so that said pallet chain is supported on the stationary rolls for movement along the

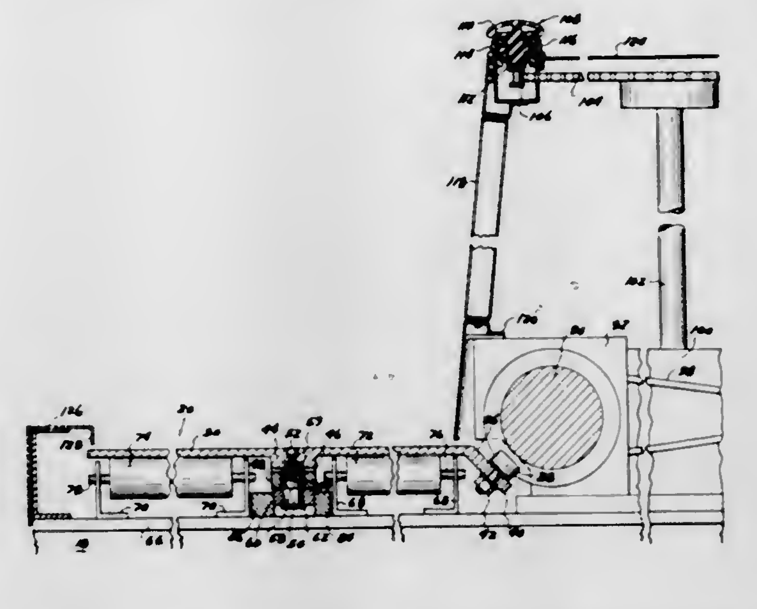

closed course; a generally upright vertical median strip supported within the pallet chain and rising above the level of the pallets; and means for driving said pallet chain supported within said median.

3,395,649
IMPELLER CONSTRUCTION
John P. Marischen, Elm Grove, Wis., assignor to Ampco Metal, Inc., Milwaukee, Wis., a corporation of Wisconsin
Filed Sept. 27, 1966, Ser. No. 582,335
6 Claims. (Cl. 103—103)

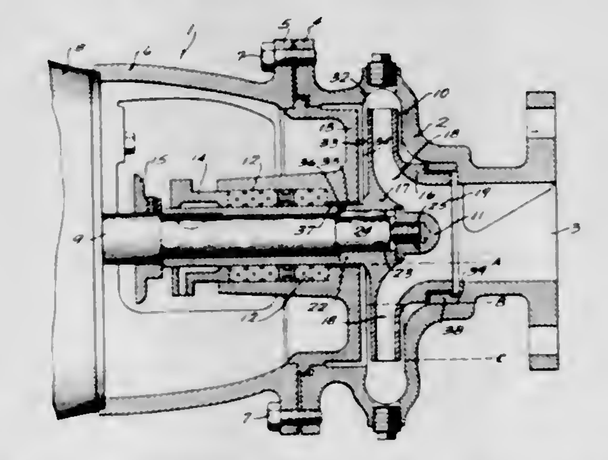

The invention relates to a modified close-type impeller for a centrifugal pump. The impeller includes a central hub having an inlet to receive the liquid being pumped and a pair of shrouds extend radially outward in spaced relation from the hub. Located between the shrouds are a series of blades and both the front and rear shrouds are scalloped or recessed along the pressure face of each blade.

3,395,650
TELESCOPIC HYDRAULIC DEVICES FOR CONTROLLING THE SPEED OF RAILWAY VEHICLES
Peter Edward Checkley, John Charles Escott, and Colin Robert Little, Cheltenham, England, assignors to Dowty Mining Equipment Limited, Ashchurch, Tewkesbury, Gloucester, England, a British company
Filed Aug. 18, 1966, Ser. No. 573,401
Claims priority, application Great Britain, Aug. 23, 1965, 36,080/65
3 Claims. (Cl. 104—162)

A track mounted cylinder and piston device for influencing the speed of free-running railway vehicles by the action of different fluid pressures during contraction

and extension respectively of the device, comprises a cylinder member secured in an upright position against one side of a track rail by a bracket so that the piston member is spaced from the head of the rail, while a head on the piston member which extends toward the rail is engageable by the flange of a wheel rolling along the rail. The bracket is adjustable in height by a bolt and nut

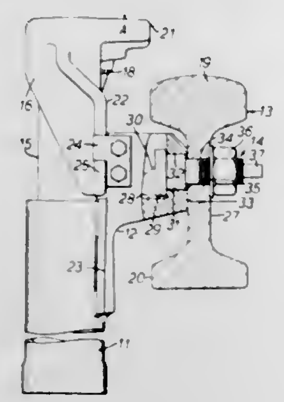

fastening in which the shank of the bolt has eccentric portions engaging fitting bores in the bracket and the central web of the rail respectively, the bolt having a key remote from the head of the bolt by which the bolt can be turned before the nut is tightened. The bracket has guide faces slidably engaged by guide members on the head of the piston member which prevent substantial turning of the piston member but which possess inherent resilience.

3,395,651
APPARATUS FOR STOPPING SUSPENDED CONVEYOR CARRIERS
Clarence A. Dehne, Orchard Lake, and Harold A. Folsom, Jr., Livonia, Mich., assignors to Jervis B. Webb Company, a corporation of Michigan
Filed Oct. 24, 1966, Ser. No. 588,960
9 Claims. (Cl. 104—249)

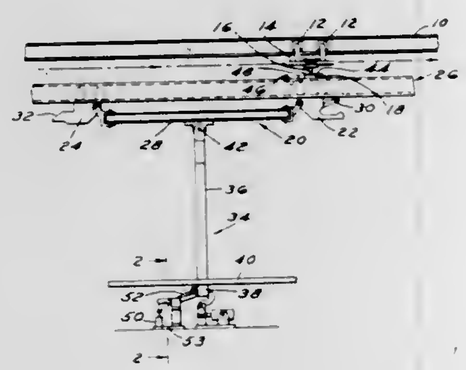

1. Apparatus for arresting movement of a conveyor carrier propelled along a supporting track by a driven pusher engaging a drive dog on the carrier, the carrier having a load carrying portion suspended from a pivot for rocking movement about an axis transverse to the direction of travel, comprising:
means for disengaging the carrier drive dog from the pusher and stopping the carrier resulting in forward and backward rocking movement of the load carrying portion about said pivot,
a motion damping device operable to restrain backward rocking movement of the load carrying portion of the carrier;
and mechanism for arresting rocking movement of the load carrying portion of the carrier operable in response to operation of the motion damping device.

3,395,652
STICK INSERTING MECHANISM
John D. Conti, Wyncote, Pa., assignor to Shelly Bros., Inc., Lansdale, Pa., a corporation of Pennsylvania
Filed Aug. 21, 1967, Ser. No. 661,945
4 Claims. (Cl. 107—8)

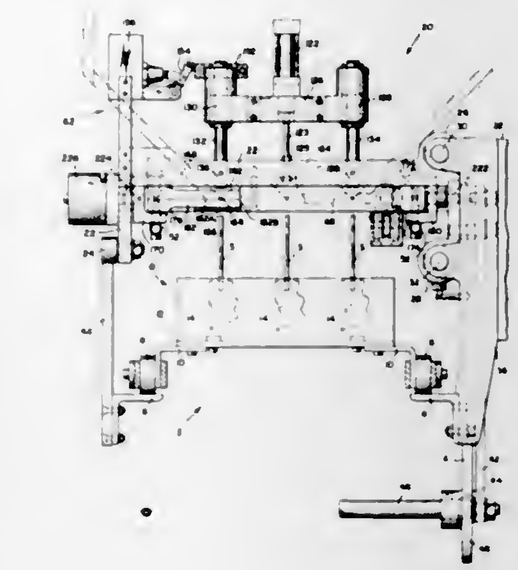

Substantially horizontal sticks are taken from a reservoir and inserted into a rotatable stick holding means which is then rotated to place the stick in a vertical position. The stick is then advanced from the stick holding means into the mold while the stick holding means is being advanced at the same rate as the mold.

3,395,653
BAKING OVENS AND PRODUCT LOADING AND UNLOADING MEANS THEREFOR
Gary A. Messerly and Wayne H. Royer, York, and William H. Gilgore, Hellam, Pa., assignors to Read Corporation, a corporation of Delaware
Filed Mar. 22, 1966, Ser. No. 536,372
12 Claims. (Cl. 107—57)

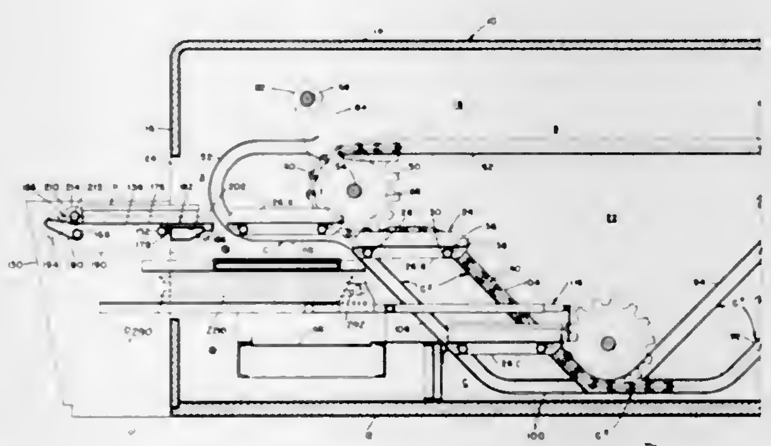

An apparatus for mechanical level plane loading and for mechanical level plane unloading of products on successive trays of a traveling tray type oven. The loader is mounted outside and adjacent the front of the oven for loading product onto a tray alined therewith and the unloader is mounted inside the oven adjacent the front of the oven below the level of the loader for unloading product from a tray alined therewith. The loader is supported on a normally horizontal drop shelf hingedly mounted for selectively swinging the same together with the loader to a vertical position adjacent the front of the oven. The loader and unloader are rendered selec-

tively operative or immobilized by separate motors whereby to provide selective simultaneous mechanical loading and unloading of two separate trays when both motors are energized, manual loading and mechanical unloading two separate trays when the drop shelf is swung to its vertical position and the loader motor is de-energized, and manual loading and unloading of the same tray when both motors are de-energized and when the drop shelf is swung to its vertical position.

3,395,654
REVERSE FLOW REACTOR AND PROCESS
Eugene Weisberg, Lakewood, and Stanley Lenox, West Orange, N.J., assignors to Ritter Pfaudler Corporation, Rochester, N.Y., a corporation of New York
Filed Dec. 2, 1966, Ser. No. 598,692
3 Claims. (Cl. 110—8)

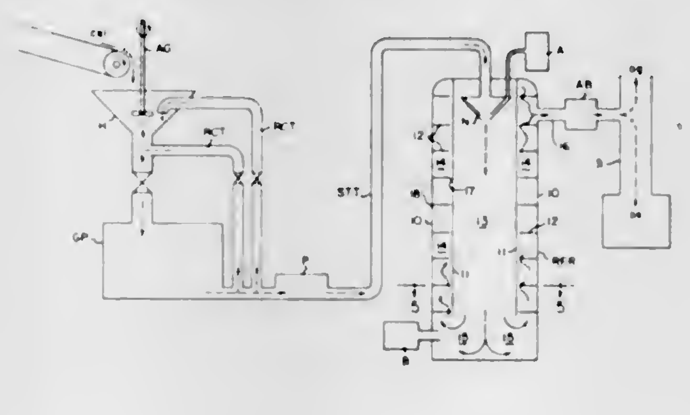

Finely divided materials in a gas stream are reacted by flowing the materials through a heated inner shell and then along a tortuous pathway between flow guides set in the space between the outer surface of the inner shell and the outer shell of the reactor to provide heat transfer and reuse. Sewage sludges are effectively destroyed by oxidation within this reactor and by this process.

3,395,655
INCINERATOR CONSTRUCTION
Milton F. Guy, Grosse Isle, Mich., assignor to Detroit Stoker Company
Filed Aug. 29, 1966, Ser. No. 575,772
23 Claims. (Cl. 110—15)

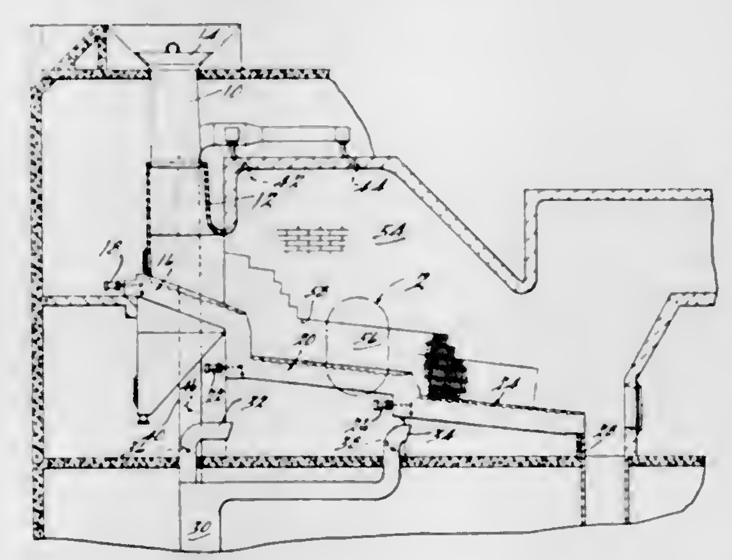

An incinerator construction having a tuyere side wall with air passages through the side wall to minimize formation of slag and clinkers.

3,395,656
FLYASH REMOVAL DEVICE FOR INCINERATORS
Lewis M. Ford and David M. Franklin, Memphis, Tenn., assignors to Steelcraft Corporation, Memphis Tenn., a corporation of Tennessee
Filed Jan. 30, 1967, Ser. No. 612,463
4 Claims. (Cl. 110—18)

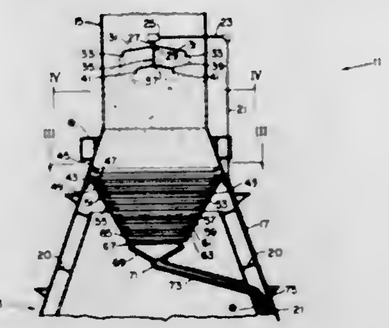

An apparatus consisting of spray nozzle means for removing flyash and other solid particles from incinerator smoke, wetting the solid particles with water allowing them to return below the incinerator passing a number of concentric louvers, through a catch basin, the catch basin having drain means to carry the wetted matter away from the incinerator.

3,395,657
AUTOMATIC FIRE CONTROL FOR COAL FIRED FURNACE
Jack A. Schuss, Hartford, Conn., assignor to Combustion Engineering, Inc., Windsor, Conn., a corporation of Delaware
Filed Aug. 1, 1966, Ser. No. 574,511
16 Claims. (Cl. 110—22)

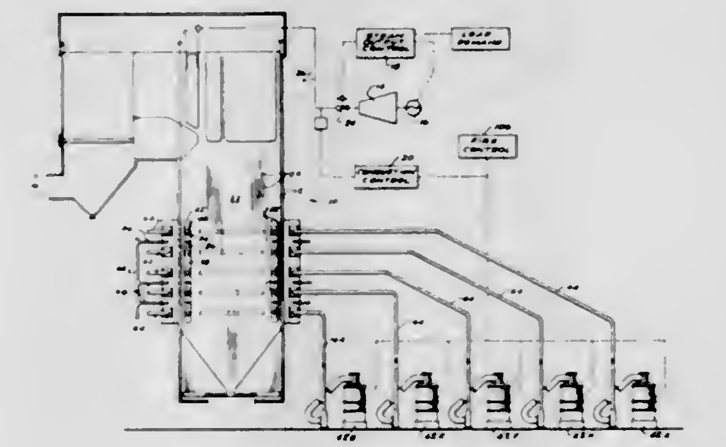

A control system for operating the burners of a multiburner, coal-fired system to automatically place groups of burners in service in response to changing load requirements on the power plant. This system comprises a digital control effective to selectively place individual coal pulverizing mills together with their associated groups of burners in service when load demand on the power plant so requires. The system further includes means to monitor the operation availability of each mill and its associated burner group and to place in service only that mill and group of burners capable of increasing the total heat output of the burner system.

3,395,658
SEWING METHOD AND APPARATUS FOR MAKING SEWN FABRIC
Charles A. Lee and Warren R. Furbeck, Knoxville, Tenn., assignors, by mesne assignments, to Appleton Wire Works Corporation, Appleton, Wis., a corporation of Wisconsin
Filed Apr. 29, 1966, Ser. No. 546,251
9 Claims. (Cl. 112—2)

Mesh fabric is made by sewing a number of laterally independent and parallel rack filaments together by stitch-

ing back and forth across the rack filaments. A sewing apparatus is provided in which the sewing machine is caused to traverse the rack filaments back and forth over a given path by driving the machine in one direction and sensing when the sewing reaches a first predetermined position, whereupon a signal is developed which is used to stop the transverse sewing and actuate the advance of the rack filaments by a predetermined distance. There-

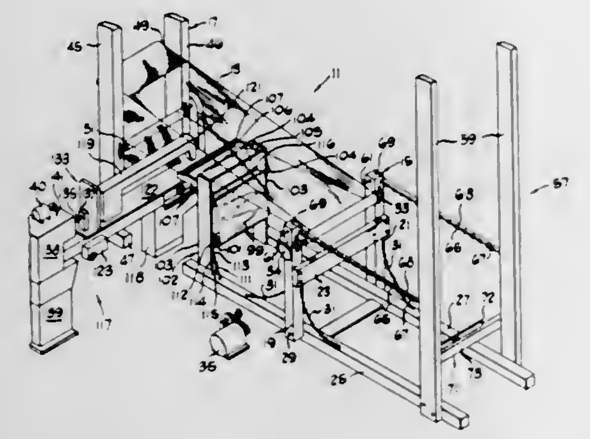

upon the sewing machine reverses its path and sews back across the rack filaments to a second position. The arrival at the second position is sensed by producing a signal which stops the transverse sewing and further advances the rack filaments by a predetermined distance. Thereupon the sewing again proceeds transversely across the rack filaments in the original direction. Preferably, a filler fabric is sewn to the rack filaments at the same time.

3,395,659
PATTERN CONTROL APPARATUS FOR YARN FEED
Travis M. Rhodes, Box 71, Dalton, Ga. 30720
Filed Nov. 23, 1964, Ser. No. 412,957
6 Claims. (Cl. 112—79)

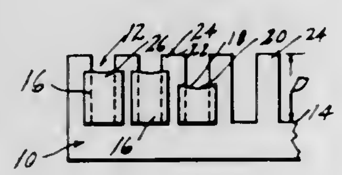

1. In a pattern control comprising a plurality of notched pattern bars for feeding yarn to a machine and wherein many different yarns are fed simultaneously and controlled by said pattern control means which includes a plurality of yarn positions corresponding with the notches in the pattern bars each having a critical dimension representing the amount of yarn to be fed at that particular position, the improvement comprising:

(a) a plurality of individual adapter means selectively and removably positioned in said notches at selected yarn positions to vary the significant dimension at those positions, at least one of said individual adapter means being of a different size than the other adapter means thereby affecting its respective yarn position differently than at least one other by varying said critical dimension thereby varying the amount of yarn fed between the differently affected yarn positions, whereby a different amount of yarn will be fed which controls the amount of yarn in the design at the respective locations in the fabric.

3,395,660
MULTIPLE SERGING MACHINE
George D. Lewis, Jr., 300 Roswell Ave., and Leo A. Wollstein, 1105 E. 2nd Ave., both of Rome, Ga. 30161
Filed Dec. 23, 1964, Ser. No. 420,749
10 Claims. (Cl. 112—123)

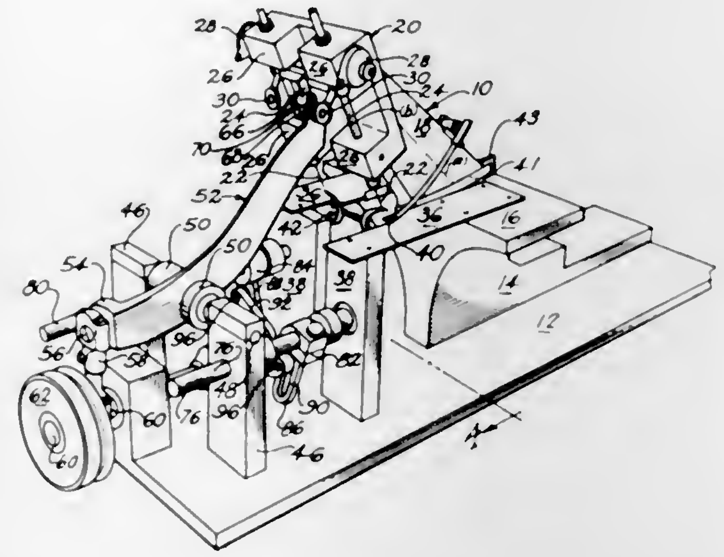

A multiple serging machine which continuously serges opposite edges of material such as a continuous length of carpet that is continuously being cut and fed to the present serging machine which simultaneously serges both the raw cut edges.

3,395,661
SEWING MACHINE DRIVE MECHANISM
Frederick G. Creter, Bricktown, N.J., assignor to The Singer Company, New York, N.Y., a corporation of New Jersey
Filed Mar. 24, 1965, Ser. No. 442,268
2 Claims. (Cl. 112—220)

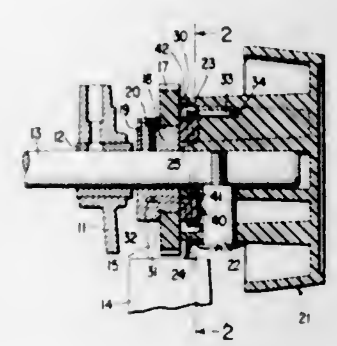

An improvement in the low speed work-penetrating characteristics of a sewing machine having a coil spring power transmission member. The improvement consists in placing a resilient annular abutment member within the coil spring so as to allow a small clearance between the abutment member and the coil spring. As torque is applied to the coil spring, it will flex to a small uninhibited deflection after which further flexing is resisted by the annular abutment member.

3,395,662
QUICK RELEASE DEVICE FOR PRESSER MECHANISM OF A SEWING MACHINE
Russell A. Fritts, Boonton Township, N.J., assignor to The Singer Company, New York, N.Y., a corporation of New Jersey
Filed Apr. 19, 1967, Ser. No. 631,937
10 Claims. (Cl. 112—235)

This disclosure relates to a quick release device for a

presser mechanism of a sewing machine. More particularly, the disclosure relates to a device for adjusting the biasing force of the presser mechanism against the work supporting surface of the bed, which device has an ac-

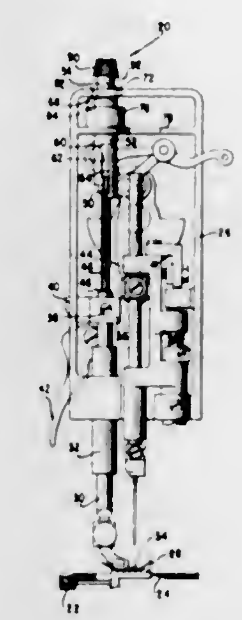

tuating member, the turning of which effects release of the biasing force of the pressure mechanism to permit easy operator movement of the work for darning or the like.

3,395,663
DEEP SEA REFUSE DISPOSAL
Richard H. Smith, San Mateo, Calif. (16831 Harkness Circle, Huntington Beach, Calif. 92647)
Filed Feb. 20, 1967, Ser. No. 617,309
6 Claims. (Cl. 114—28)

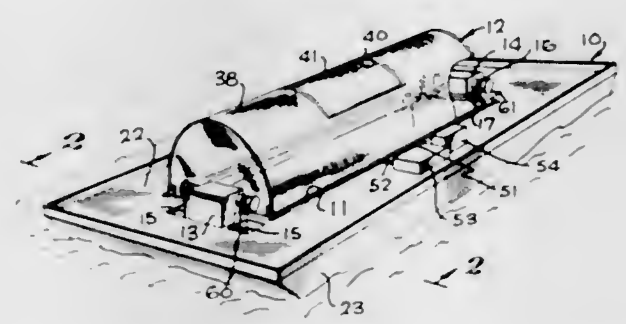

The invention relates to disposal at sea of material such as mixed trash or refuse of the character commonly collected in a community as household rubbish. More particularly, the invention relates to a means for submerging mixed refuse to a depth sufficient to render it nonbouyant and there dumping it so that the material will then sink to the ocean bottom.

3,395,664
TETRAHEDRON SAILING VEHICLE
Lewis Anthony Greenberg and Ellis D. Gelman, both of 3607 Pacific Ave., Venice, Calif. 90291; Eugene P. Flores, 327 South Ave. 56, Los Angeles, Calif. 90001; and Ena M. Dulnoff, 1150 La Loma Road, Pasadena, Calif. 91105
Filed Sept. 12, 1966, Ser. No. 578,825
16 Claims. (Cl. 114—39)

A wind-propelled vehicle having a tetrahedronal frame defining a triangular base, a sail supported by the frame, and means mounted to the frame at the corners of the

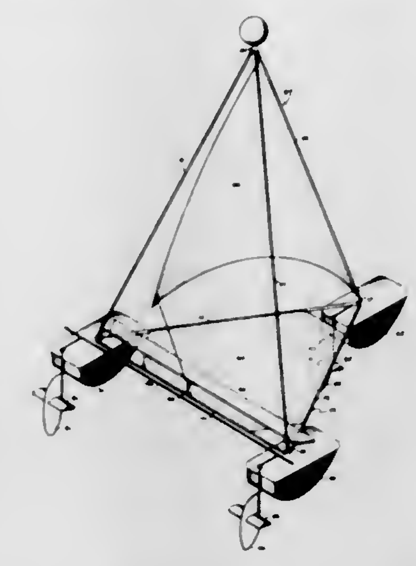

triangular base for engaging and supporting the vehicle for motion relative to a traveled surface.

3,395,665
DEEP WATER RECOVERY
Edgar N. Rosenberg and Stephen F. Moran, San Diego, Calif., assignors to the United States of America as represented by the Secretary of the Navy
Filed Dec. 5, 1966, Ser. No. 599,686
2 Claims. (Cl. 114—51)

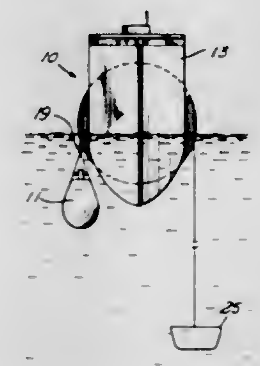

This invention relates to an improved floatable hoisting apparatus for raising a sunken object that includes a plurality of radially adjacent watertight compartments selectively flooded by a motor pump unit fed from a fluid sump for producing a torque with the improvement being directed to providing a counterweight in the form of a sinkable barge, for producing a torque additive to that produced by the flooding compartments. Upon raising and detaching the sunken object from the hoisting apparatus the compartment flooding sequence can be reversed to raise and recover the barge. The floating hoisting apparatus is additionally provided with a bow and stern section to facilitate transportation and to provide a stable operation platform.

3,395,666
WATER CRAFT
Francois R. Moisdon, 1310 NE. 204th St., North Miami Beach, Fla. 33162
Filed Aug. 1, 1966, Ser. No. 569,377
1 Claim. (Cl. 114—66.5)

A water craft having a flat, streamlined underwater wing-structure extending upward centrally of which is a pillar structure supporting a superstructure above the water. Propulsion means is provided for moving the craft through the water. Also provided, as a means for controlling lateral stability, is a pair of stabilizer fins, one

to each side and to the rear of the wing-structure, and a pendulum in the pillar structure operative, through link mechanism, to oppositely swing the fins in response

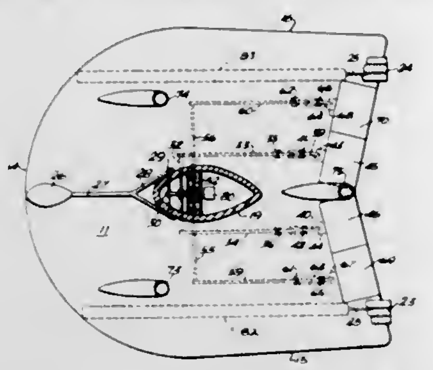

to lateral swinging movement of the pendulum to correct for deviations from horizontal level position of the wing-structure.

3,395,667
CONTROL SYSTEM FOR SHIP ROLL STABILIZATION
Wayne E. Kohman, Morris Plains, N.J., assignor to Curtiss-Wright Corporation, a corporation of Delaware
Filed June 16, 1966, Ser. No. 558,033
10 Claims. (Cl. 114—122)

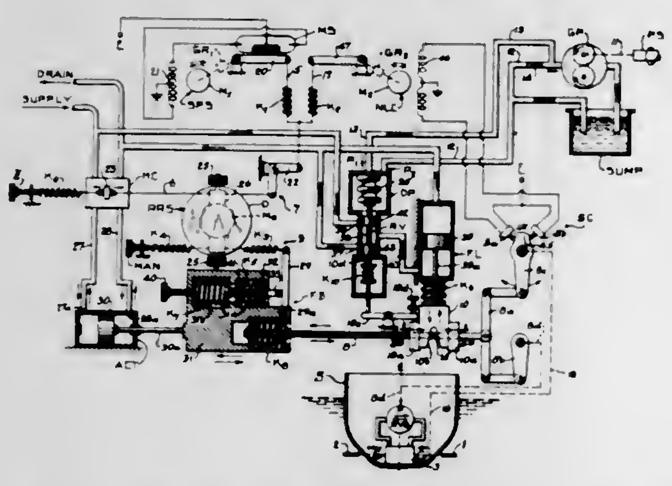

A roll stabilization system includes hydromechanical actuating means for positioning the fins of a ship according to roll angle and rate of roll, and feedback mechanism providing a force feedback signal which changes at a low rate in response to movement of the actuating means when fin angles are greater than a predetermined angle and changes at a higher rate when fin angles are less than the predetermined angle to thereby render the system effective to control roll of the ship in both high and low frequency waves.

3,395,668
ANCHOR DEVICE
Robert A. George, 175 W. 92nd St., New York, N.Y. 10025
Filed July 11, 1967, Ser. No. 652,534
14 Claims. (Cl. 114—206)

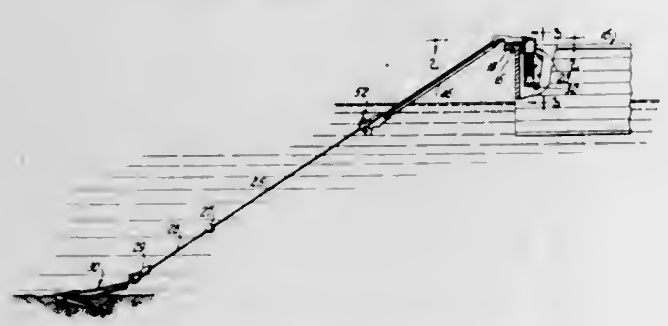

An anchor device especially adapted for use on a small boat and principally for convenient releasing of the anchor and reducing the strains on the anchor, the anchor rope and associated connections resulting from movements of the anchored boat. The anchor is connected to a spring-loaded reel attached to the boat, a restraining member comprising a length of flexible elastic material being anchored to a special fitting on the boat and detachably connected to a selected point on the rope when the anchor is in operative position, whereby the restraining member coacts with the reel to provide yieldable resistance against the movement of the boat.

3,395,669
TORPEDO LAUNCHING TUBE DOOR
Edward R. Keenan, Newport, R.I., assignor to the United States of America as represented by the Secretary of the Navy
Filed June 23, 1967, Ser. No. 649,429
8 Claims. (Cl. 114—238)

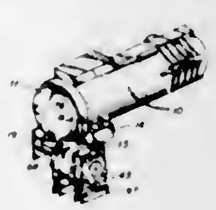

A modified door structure for use with surface vessel type shipboard torpedo launching tubes incorporating facilities for passing a wire for a wire guided torpedo through the door for control of the torpedo following launching. Also included is a portable housing assembly for a reel of guidance wire to be paid off with the torpedo adapted for mounting externally of the torpedo launching tube door and a telescopic portion of a feed tube for the wire whereby a mating of the terminal end of the wire portion assembled within the torpedo and the terminal end of the wire portion extending from the reel in the container external to the door may be accomplished after the loading of the torpedo into the torpedo tube and the latching of the door.

3,395,670
SURFACE LAUNCHING TORPEDO TUBES
Edward R. Betzold, Minneapolis, Minn., assignor, by mesne assignments, to the United States of America as represented by the Secretary of the Navy
Filed June 22, 1967, Ser. No. 648,548
3 Claims. (Cl. 114—238)

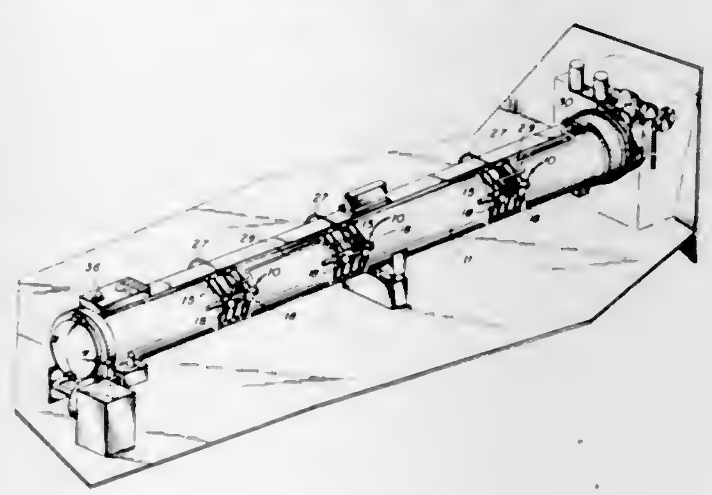

A restraining mechanism for positioning and maintaining a predetermined orientation of a torpedo within a torpedo tube comprises a plurality of pneumatically actuated restraining mechanism disposed along the length and about the periphery of a torpedo launching tube and projecting into the interior of the tube for the positioning within the tube of a normal sized torpedo or a torpedo of lesser overall diameter dimensions than the normal

torpedo of maximum dimensions for which the torpedo tube is initially intended for use. The restraining mechanisms incorporate a plurality of pneumatically controlled and spring and air operated devices for actuating a longitudinally moveable gear tooth type rack for concurrent rotation of a pinion gear engaged therewith which in turn is disposed to drive a feed screw of a traveling nut type device to provide radial positioning movement of a torpedo engaging pad within the interior of the torpedo tube.

3,395,671
STEERING DEVICE FOR AMPHIBIOUS VEHICLE
Hollis P. Zimmerman, Jr., Rochester, Mich., assignor to Chrysler Corporation, Highland Park, Mich., a corporation of Delaware
Filed May 16, 1966, Ser. No. 550,261
7 Claims. (Cl. 115—1)

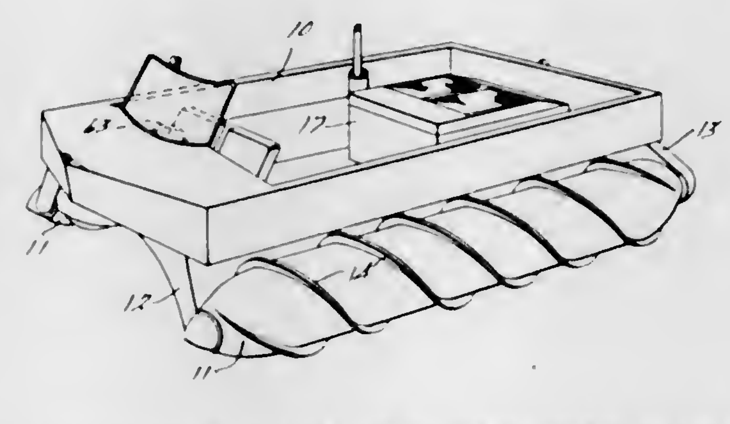

An amphibious type vehicle, supported on and propelled by a pair of rotatable screw type pontoons having oppositely wound ground engaging screws at is opposite sides, is controlled by means of a pair of planetary gear systems comprising a pair of coaxial ring gears connected with a propelling motor for rotation thereby in opposite directions, a pair of coaxial sun gears conected with a steering control motor for rotation thereby in the same direction, and a pair of planet gears, the planet gear in each gear system intermeshing with the sun gear and ring gear of that system to rotate about the intermeshed sun gear and being connected with one of each of the pontoons to rotate the same in a direction opposite to the direction of rotation of the other pontoon when the propelling motor is operated to rotate said ring gears and said steering control motor is inoperative.

3,395,672
AMPHIBIOUS MOTOR VEHICLE
Walter Ruf, Landhaus am See, Thurgau, Bottighofen, Switzerland
Continuation-in-part of application Ser. No. 492,532, Oct. 4, 1965. This application Apr. 20, 1967, Ser. No. 632,366
Claims priority, application Germany, Oct. 2, 1964, R 38,907
10 Claims. (Cl. 115—1)

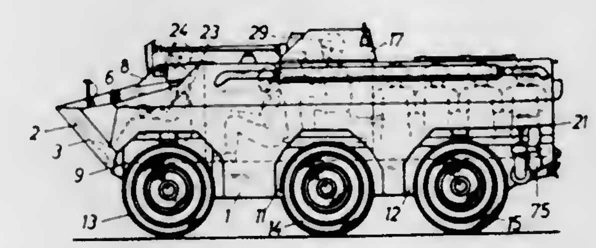

A floatable six-wheel motor vehicle in which the front wheels and the rear wheels may be steered in opposite directions, while the middle wheels are nonsteerable.

3,395,673
COATING APPARATUS INCLUDING WORK-TRANSFER MEANS HAVING DIRECTION CHANGER
Clarence F. Klein and Robert L. Du Mond, Grand Rapids, Mich., assignors to Packaging Corporation of America, Evanston, Ill., a corporation of Delaware
Filed May 27, 1965, Ser. No. 459,224
11 Claims. (Cl. 118—2)

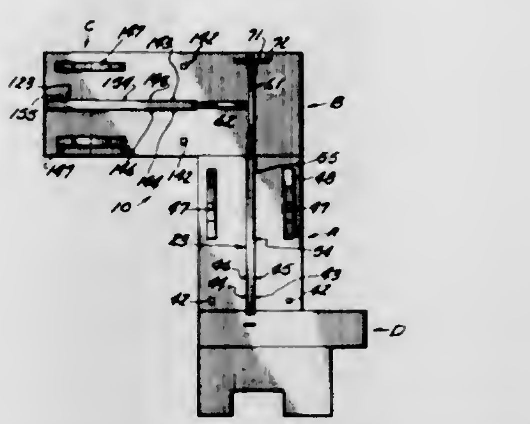

1. An apparatus for applying adhesive on predetermined areas of a blank of sheet material, said apparatus comprising first adhesive applying means, first conveyor means for moving the blank in one direction past said first applying means, first control means operatively connected to said first applying means for effecting application of adhesive on first predetermined areas of the blank as the latter is moved past said first applying means, such first predetermined blank areas being disposed in substantially parallel relation with respect to said one direction, second conveyor means for moving the blank in a second direction angularly disposed with respect to said one direction, blank-direction changing means disposed intermediate and cooperating with said first and second conveyor means, said blank-direction changing means comprising first and second belt conveyor members which are vertically displaceable in opposing directions and arranged respectively in alignment with one of said first and second conveyor means, second adhesive applying means, and second control means operatively connected to said second applying means for effecting application of adhesive on second predetermined blank areas as such blank is moved in said second direction past said second adhesive applying means, said second predetermined areas being disposed in substantially parallel relation with respect to said second direction.

3,395,674
APPARATUS FOR VAPOR COATING TUMBLING SUBSTRATES
Francis P. Burham, Burlington, and Robert W. Hamilton, West Burlington, Iowa, assignors to International Resistance Company, Philadelphia, Pa.
Filed Sept. 23, 1963, Ser. No. 310,662
9 Claims. (Cl. 118—49.1)

1. Apparatus for coating objects by thermal evaporation in a vacuum comprising a base plate; a pair of shafts rotatably supported on the base plate in spaced parallel relation; a pair of wheels mounted on each shaft with the wheels on one shaft being in alignment with the wheels on the other shaft; a cylindrical drum having a cylindrical outer wall, a pair of flat side walls secured in the ends of said outer wall, each of said side walls having a central opening therein, means secured to said drum and mounted around the inner surface of said outer wall providing a plurality of projections for continuously tumbling the objects being coated as the drum rotates, and a pair of annular track rings surrounding and secured to said outer wall, the drum being rotatably supported on said wheels with each track ring resting on a pair of aligned wheels;

a pair of evaporator supporting posts mounted on said base plate one adjacent each side of the drum; an evaporator containing the coating material, said evaporator extending through the openings in the side walls of the

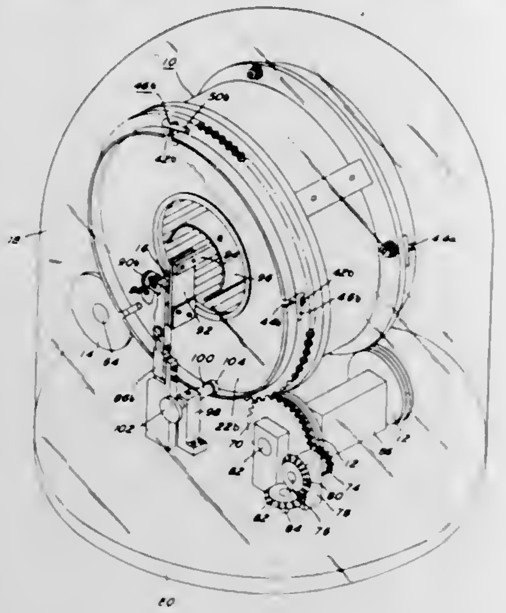

drum and across the interior of the drum with the ends of the evaporator supported on the supporting posts; means for heating the evaporator to evaporate the coating material; and means for rotating the drum.

3,395,675
DOG RESTRAINING DEVICE
Anne Minor Fowlkes, 731 Biltmore Way, Coral Gables, Fla. 33134
Filed Sept. 12, 1966, Ser. No. 578,523
1 Claim. (Cl. 119—120)

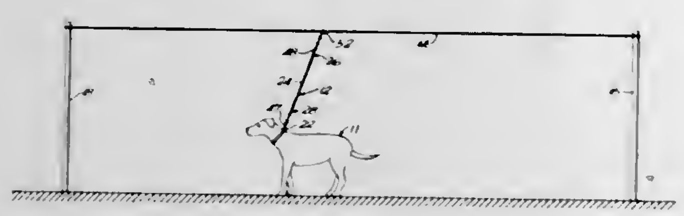

An animal restraining or tethering device for permitting free movement of the animal along the path of travel defined by a suspended, elevated line and including an enlarged ring element circumposed thereabout and having free movement therealong, and a restraining device comprising an intermediate, relatively rigid rod having transverse aperture extending through opposite ends thereof, each of said apertures having pivotally mounted therein swivel ring assemblies comprising a pair of rings connected by a headed stem permitting the rings to have relative movement thereabout through 360° of rotation, snap means connected to one swivel ring assembly for detachable engagement with an animal collar, and a link chain and second snap means connected to the other swivel ring assembly for detachable engagement with the enlarged ring on said elevated line.

3,395,676
VAPOR GENERATOR
Theodore S. Sprague, Hudson, Ohio, assignor to The Babcock & Wilcox Company, New York, N.Y., a corporation of New Jersey
Filed July 5, 1966, Ser. No. 562,861
5 Claims. (Cl. 122—32)

1. In a fluid heating unit, a pressure vessel, a plurality of tubes in said vessel arranged for parallel flow of fluid therethrough, means flowing primary fluid through the vessel and over the tubes, means flowing a vaporizable secondary fluid through the tubes in indirect heat absorbing relation with the primary fluid, means for cutting off fluid supply to said tubes in the event of a tube failure, means for reversing the direction of fluid flow in said tubes in the event of a tube failure and for draining the tubes upon such flow reversal, and a flow resistor in the inlet and outlet portions of each tube, each tube inlet resistor being proportioned and arranged to provide a substantial secondary fluid pressure drop in the normal secondary fluid flow direction to promote stable and uniform flow through the tubes and a relatively low pressure drop in the reverse

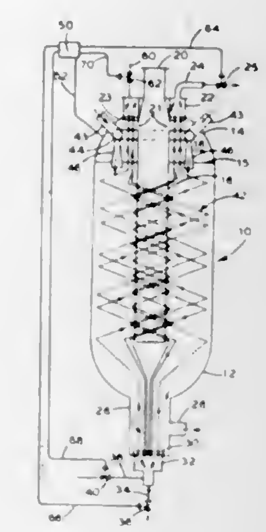

flow direction to permit rapid drainage of secondary fluid from the tubes in the event of tube failure, each tube outlet resistor being proportioned and arranged to provide a relatively low secondary fluid pressure drop in the normal secondary fluid flow direction and a substantial secondary fluid pressure drop in the reverse flow direction in the event of tube failure to minimize flow in the direction of the tube fault.

3,395,677
TUBE LINING FOR PRISMATIC COMBUSTION CHAMBERS
Georg Brandstetter, Boblingen, Germany, assignor, by mesne assignments, to Sulzer Brothers, Ltd., Winterthur, Switzerland, a corporation of Switzerland
Filed Feb. 1, 1967, Ser. No. 613,178
Claims priority, application Germany, Feb. 4, 1966, K 58,334
1 Claim. (Cl. 122—235)

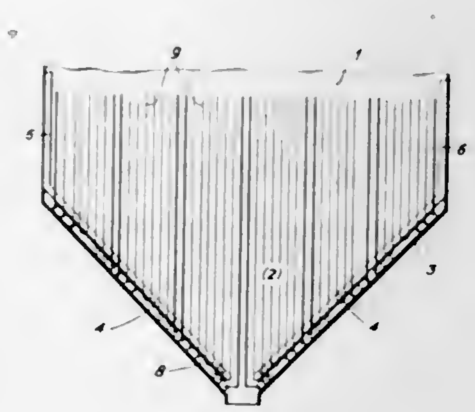

A tube lining for prismatic combustion chambers having funnels in the lower end. The tube lining portions on vertical walls of the funnel are bent under the tube lining portions on inclined walls of the funnel to overlap the tube lining portions with each other. The overlap covers any space between the reversals of the tube lining portions with respect to the plate jacket surrounding the combustion chamber to prevent heat radiation from within the chamber to pass to the plate jacket.

3,395,678
STEAM GENERATION AND ENTHALPY SEPARATION OF FLOWING SUPERCRITICAL PRESSURE STEAM
Edward L. Kochey, Jr., Colebrook, Conn., assignor to Combustion Engineering, Inc., Windsor, Conn., a corporation of Delaware
Filed Dec. 28, 1966, Ser. No. 605,405
5 Claims. (Cl. 122—406)

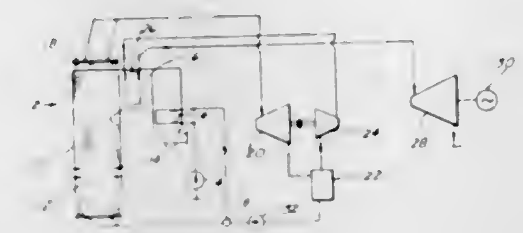

A supercritical pressure steam generator with recirculation through the waterwalls. A means for decreasing the pressure of the fluid below saturation pressure after passage through the waterwalls, and for separating the fluid into a water or low enthalpy portion, and a steam or high enthalpy portion. The low enthalpy portion is used for recirculation to the waterwall, while the high enthalpy portion is passed on to the superheater, after its pressure has been increased to approximately the original level. A device for separating the flowing stream of fluid at supercritical pressure into high and low enthalpy portions by throttling the flow, and thereby substantially increasing the velocity such that the static pressure of the fluid becomes less than the saturation pressure. Water and steam particles thereby formed are separated during a pressure recovery expansion by eccentrically expanding the flow with respect to the low enthalpy fluid takeoff.

3,395,679
TWO-CYCLE ENGINE AND CYLINDER BLOCK THEREFOR
Oval F. Christner, Quincy, Ill., assignor, by mesne assignments, to Brunswick Corporation, Chicago, Ill., a corporation of Delaware
Filed Aug. 17, 1966, Ser. No. 572,997
9 Claims. (Cl. 123—73)

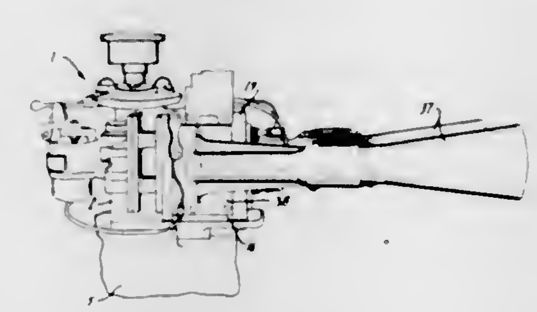

The cylinder block for a two-cycle engine having two cylinders or multiples of two cylinders disposed in line or in a bank and firing alternately is provided with scavenging or inlet ports and exhaust ports opening toward opposed sides of the block for each cylinder. The opposed scavenging or inlet ports communicate with a crankcase chamber for the corresponding cylinder through corresponding transfer passages disposed along each side of the block. The exhaust ports for each cylinder are disposed angularly to provide for convergence of the corresponding ports of the respective cylinders into a common exhaust passage opening from each side of the block. The scavenging or inlet ports, transfer passages, exhaust ports and exhaust passages respectively are all symmetrically disposed with respect to a common plane containing the cylinder axes.

3,395,680
CONSTANT-PEAK PRESSURE, ROTARY VALVE ENGINE AND METHOD OF OPERATION THEREOF
John H. Brooks, Encino, Calif., assignor to McCulloch Corporation, Los Angeles, Calif., a corporation of Wisconsin
Filed Dec. 14, 1966, Ser. No. 601,581
12 Claims. (Cl. 123—78)

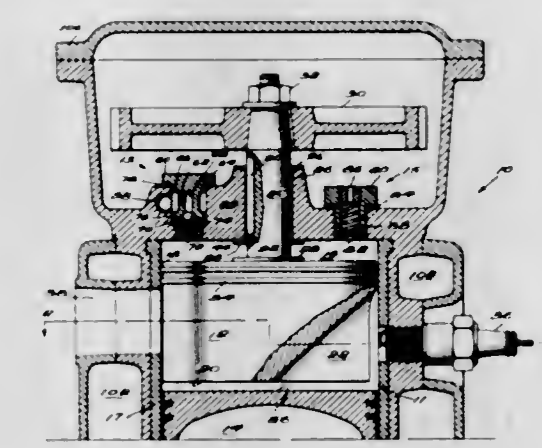

An internal combustion engine including a cylinder-head defining rotary valve member supported by an annular fluid body for movement toward and away from a reciprocating piston. The annular fluid body serves to vary the position of the cylinder-head valve so as to maintain a constant peak combustion pressure and concurrently serves as a fluid thrust bearing for the cylinder-head rotary valve member.

3,395,681
FUEL EVAPORATOR AND ECONOMIZER FOR INTERNAL COMBUSTION ENGINES
William T. B. Walker, 2697 Cunard St., Los Angeles, Calif. 91106
Filed Oct. 12, 1965, Ser. No. 495,035
5 Claims. (Cl. 123—119)

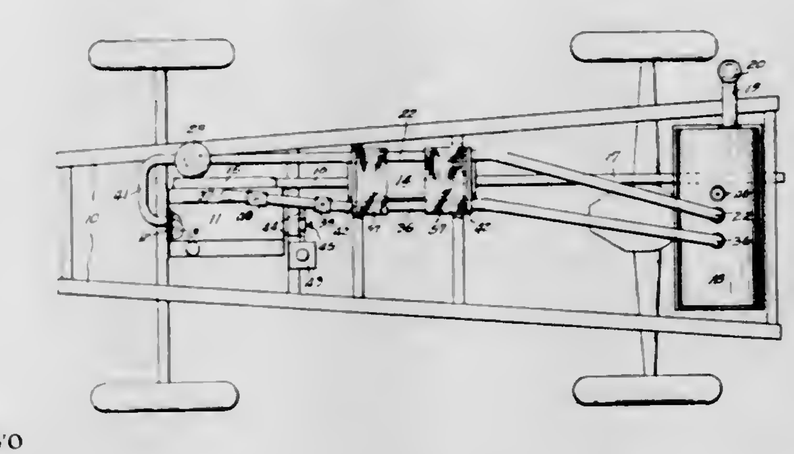

A fuel-supply system for an internal-combustion engine is disclosed. The liquid fuel is contained in a tank, incorporating a baffle for dispursing vaporized waste fuel that is drawn from the engine crank case to be returned to the fuel intake of the engine. A heat exchanger supplies heat to the waste-fuel duct as well as the intake fuel duct and a demand valve is incorporated to supply a metered quantity of air to the fresh fuel that is drawn from the tank. An auxiliary fuel source is also disclosed, along with certain safety and control valves.

3,395,682
FUEL INJECTION SYSTEMS
Harold Ernest Jackson, Plympton St. Mary, Devon, England, assignor of one-half to Petrol Injection Limited, Plympton, Plymouth, Devon, England, a British company
Filed Feb. 14, 1966, Ser. No. 527,221
Claims priority, application Great Britain, Feb. 26, 1965, 8,528/65
14 Claims. (Cl. 123—139)

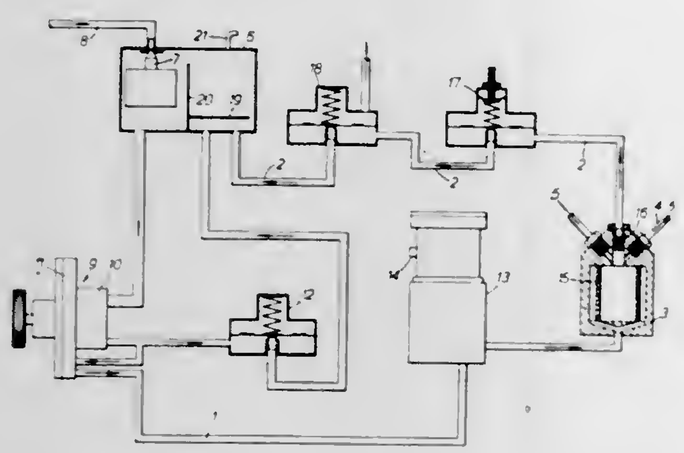

A continuous circulation, low pressure fuel injection system having fuel supply and return branches and vented injector nozzles fed from the supply branch. Fuel is continuously circulated by an engine driven, combined pressurising device in the supply branch comprising a feed pump supplying to a dynamic vortex-type pump a fuel always in excess of the inflow requirements of the latter pump (excess fuel being by-passed by a relief valve) so that the output pressure of the vortex-type pump follows a square law characteristic over substantially the whole of its operating range. A centrifugal relief valve, the opening pressure of which increases as the square of engine speed, also is disclosed for pressurising fuel in the supply branch. Fuel flow to the injector nozzles also is controlled by a flow control valve operated in response to engine manifold vacuum. The valve is operated by a piston slidable in a chamber connected via a flow restrictor to the manifold. A spring in the piston chamber applies an unseating force against a plate valve which, when unseated, vents the piston chamber. A seating force is applied to the plate valve by a diaphragm which communicates directly with the manifold so that the diaphragm responds to manifold vacuum changes in advance of change in pressure in the piston chamber. Any such changes cause imbalance between the seating and unseating forces acting on the plate valve and the piston moves until balance is restored.

3,395,683
FUEL INJECTION SYSTEMS
Harold Ernest Jackson, Plympton St. Mary, Devon, England, assignor of one-half to Petrol Injection Limited, Plympton, Plymouth, Devon, England, a British company
Filed Dec. 9, 1966, Ser. No. 600,462
Claims priority, application Great Britain, Dec. 24, 1965, 54,794/65
15 Claims. (Cl. 123—140)

A fuel injection system of the continuous flow type for supplying a plurality of nozzles in the manifold of an internal combustion piston engine is controlled by certain engine parameters such as throttle position and engine speed. This system includes an engine driven pump with an output pressure proportional to engine speed delivering to a plurality of fuel metering circuits which control the pressure at the nozzles by throttling the fuel flow in a bypass to the pump inlet. Serially arranged metering devices in these circuits controlled by throttle position and pump pressure provide for selective operation in order to obtain the proper mixture ratio as engine volumetric

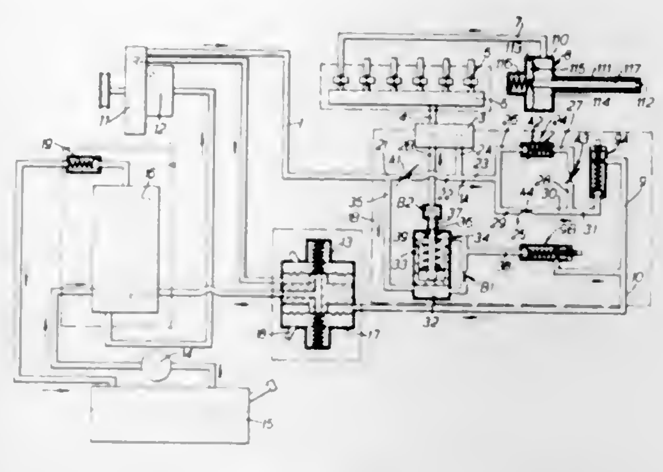

efficiency varies over the engine speed range for each throttle position.

3,395,684
SOLID STATE IGNITION SYSTEM
Floyd M. Minks, Campbellsport, Wis., assignor, by mesne assignments, to Brunswick Corporation, Chicago, Ill., a corporation of Delaware
Filed Apr. 1, 1966, Ser. No. 539,533
22 Claims. (Cl. 123—148)

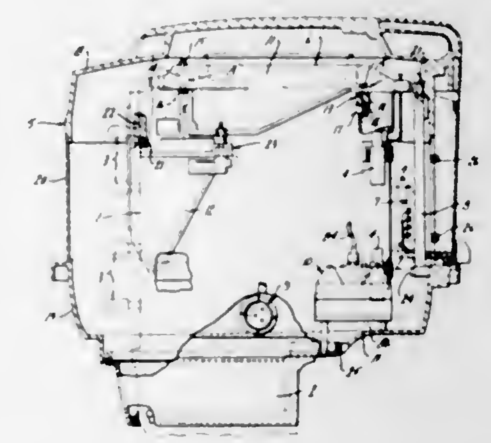

The present disclosure relates to an ignition system mounted within a rectangular cast aluminum box having shallow ribbed side walls. The ignition system includes a blocking oscillator connected to the battery to charge a capacitor which is discharged to the spark plugs by firing of a controlled rectifier. The solid state components of the blocked oscillator and the controlled rectifier are securely attached in good heat exchange relationship in the interior bottom wall of the box and potted with a combination of sand and a polyurethane potting material. A main power transistor of the blocking oscillator is bonded by an adhesive to a coined surface on the bottom wall with a thin plastic insulating sheet therebetween to provide maximum heat transfer characteristics without damage to the insulating sheet. The ignition unit is located within the cowl and is mounted on an engine cowl assembly support which is resiliently mounted to the drive unit and substantially isolates the cowl assembly and ignition unit from the drive unit. The boxed unit is mounted in front of the carburetors such that air drawn into the several carburetors passes over the box. The potted construction and vibration isolation essentially prevents damage associated with the vibration characteristics of an outboard motor and permits application in the severe environmental conditions encountered in the outboard and the like.

3,395,685
ELECTRICAL PULSE SOURCE
Floyd M. Minks, Campbellsport, Wis., assignor, by mesne assignments, to Brunswick Corporation, Chicago, Ill., a corporation of Delaware
Filed Feb. 11, 1966, Ser. No. 526,749
28 Claims. (Cl. 123—148)

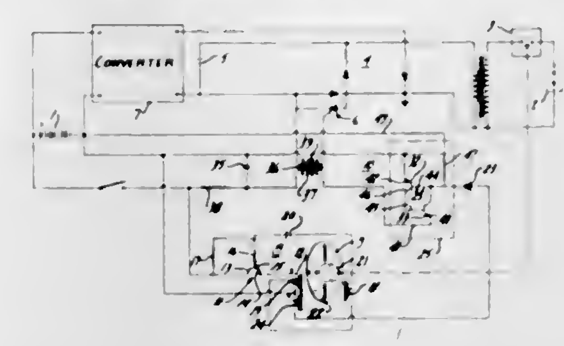

An ignition system includes a capacitor connected to a battery by a condenser and to a distributor by a series connected pulse transformer and silicon controlled rectifier having a gate connected to a trigger capacitor through a transformer. The charging and discharging of the trigger capacitor is controlled by a transistor gated oscillator including an output winding, a collector winding and a base winding. The output winding is connected to fire a gated switch which includes a pair of complementing transistors connected in a regenerative circuit generally in accordance with the equivalent circuit for a silicon controlled rectifier. This switch is connected in parallel with the trigger capacitor and a trigger transformer to periodically discharge the capacitor through the transformer. The trigger capacitor is charged from the battery of the engine through a suitable resistor to establish a charging time constant substantially longer than the period of the oscillator when triggered to oscillate. Its discharge time however through the switch is very rapid. A resistor externally connected between the gate lead and the cathode lead of the switch device effectively controls the holding current of the switch.

The oscillator includes a pair of cores having generally U-shaped portions which are mounted with the ends of the legs in aligned opposed relation. The cores are spaced from each other sufficiently far to permit rotation of the disc therebetween. The oscillator windings are wound one each on the cores and connected in the oscillator circuit. When a slot in the disc is aligned with the cores, magnetic coupling is established between the windings. When the continuous portion of the disc is aligned with the cores, the magnetic coupling between the cores is greatly reduced. Each core is similarly mounted in a conductive member having the lower face coplanar with the end faces of the core legs. The member includes a single slot encompassing the legs and the space between them and thus generally being the same as a slot in the disc.

The collector winding is constructed with a tap to which the base winding is connected to provide a degenerative coupling to positively prevent oscillations except when the coupling is established through the alignment of the nonconductive portion of the vane.

3,395,686
BLOCKING OSCILLATOR CIRCUIT AND CAPACITOR DISCHARGE IGNITION SYSTEM EMPLOYING THE BLOCKING OSCILLATOR CIRCUIT
Floyd M. Minks, Campbellsport, Wis., assignor, by mesne assignments, to Brunswick Corporation, Chicago, Ill., a corporation of Delaware
Filed Nov. 3, 1966, Ser. No. 591,910
25 Claims. (Cl. 123—148)

A capacitor discharge type of ignition system for an internal combustion engine is provided with blocking oscillator for charging the capacitor. A pulse generating means is inductively coupled to trigger a switching means to discharge the capacitor through a circuit including an

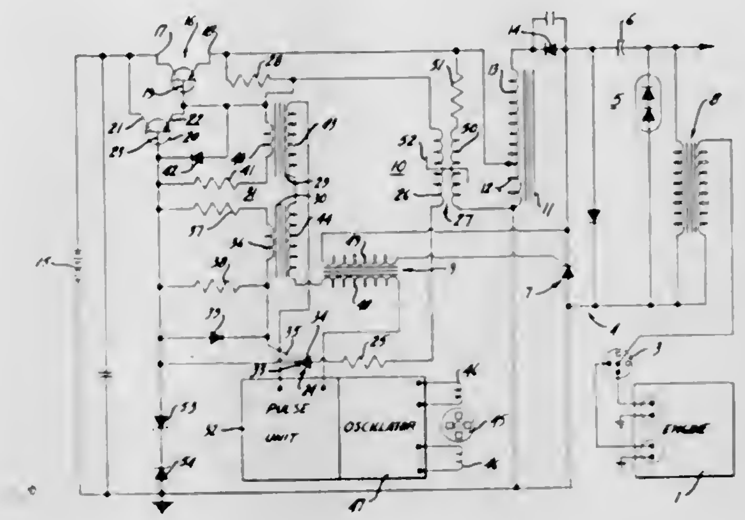

ignition coil and to trigger a switching means to initiate operation of the blocking oscillator in a sequential manner.

3,395,687
AUTOMATIC STARTER FOR SMALL ENGINES
Joseph R. Harkness, Germantown, Wis., assignor to Briggs & Stratton Corporation, Milwaukee, Wis., a corporation of Wisconsin
Filed Mar. 20, 1967, Ser. No. 624,337
5 Claims. (Cl. 123—179)

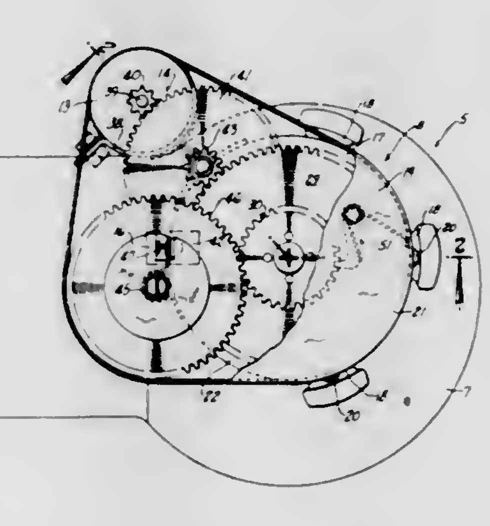

The spring of a spring motor starter is wound by a small, low powered electric motor (rotating or reciprocating), driving through a high ratio transmission. A cyclically moving actuator, driven by the electric motor in synchronism with spring winding, automatically opens the motor energizing circuit when the spring is wound and concurrently releases the engine crankshaft for spring propelled cranking.

3,395,688
GASOLINE POWERED HAMMER
Henry V. Pfetzing, Michigan Center, Mich., assignor to Skil Corporation, Cook County, Ill.
Filed Apr. 14, 1966, Ser. No. 542,508
17 Claims. (Cl. 123—180)

1. An internal combustion percussive device comprising, in combination,

(a) a body having a combustion cylinder defined therein,

(b) a piston within said cylinder adapted to reciprocate between a fuel charge compressing position and an exhaust position,
(c) spring means biasing said piston toward the fuel charge compressing position,
(d) a fueling system including a carburetor having a choke, a fuel tank communicating with said carburetor and a passage establishing communication between said carburetor and said cylinder,

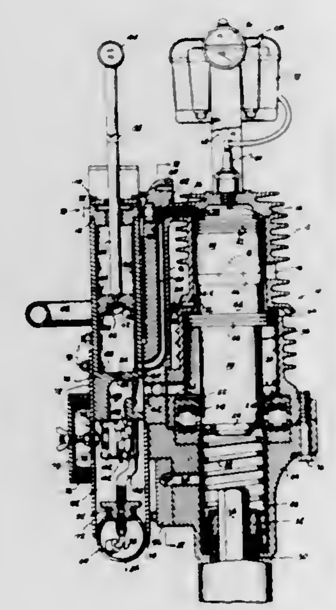

(e) a starting mechanism mounted on said body including a pump having a starter cylinder and a manually operated starter piston reciprocally mounted within said cylinder,
(f) a first passage establishing unidirectional communication between said carburetor and said starter cylinder and a second passage establishing unidirectional communication between said starter cylinder and said combustion cylinder, and
(g) means interposed between said carburetor choke and said starter piston adapted to automatically actuate said choke at a preselected position of said starter piston.

3,395,689
ENGINE DECOMPRESSION APPARATUS
Orien A. Kruse, Bloomington, Minn., assignor to Studebaker Corporation, South Bend, Ind., a corporation of Michigan
Filed Sept. 15, 1966, Ser. No. 579,741
8 Claims. (Cl. 123—182)

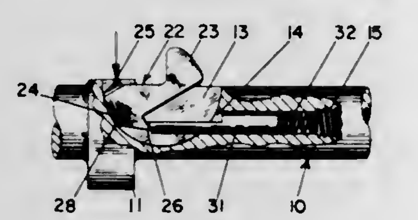

Automatic engine decompression apparatus for relieving or reducing the pressure of compression of an internal combustion engine at slow speeds in which a cam lever is rotatably disposed in a groove in the cam shaft of an engine for rotation between a self-locking position at which a portion of the cam lever projects radially outwardly of a camming portion of the cam shaft and a second position in which the valve tappet engaging portion is withdrawn into the camming portion of the cam shaft for operation of the engine without the decompression function.

3,395,690
INTERNAL COMBUSTION ENGINE
Robert M. Riley, Round Lake, Ill., assignor to International Harvester Company, a corporation of Delaware
Continuation of application Ser. No. 498,559, Oct. 20, 1965. This application May 5, 1967, Ser. No. 636,548
10 Claims. (Cl. 123—191)

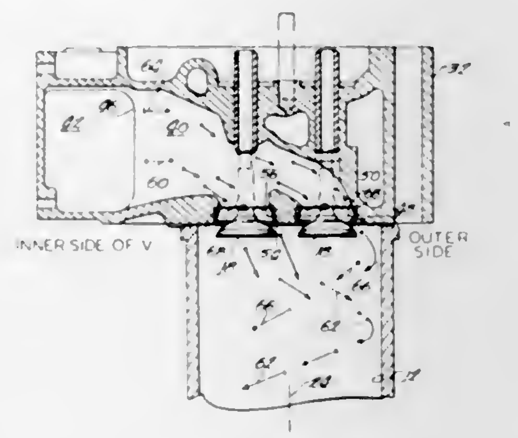

Method and cylinder-head passage structure for dual induction of swirling intake fluid into an engine cylinder in two stages. Initially fluid in the passage is emitted from dual, back-masked, flow directing ports which contribute in the proportions of about 50%–50% to the swirl producing component of the slow moving intake fluid. Then during main induction the fluid is emitted faster, and so that about 70% of the swirl component comes from that one of the dual ports which is at the extreme end of their tangentially disposed, common, single inlet passage, and only about 30% from the other port, which is at an intermediate location.

3,395,691
PORTABLE BARBECUE
Norman E. Skarsten, 5933 Estates Drive, Oakland, Calif. 94611
Filed Mar. 9, 1966, Ser. No. 533,095
7 Claims. (Cl. 126—25)

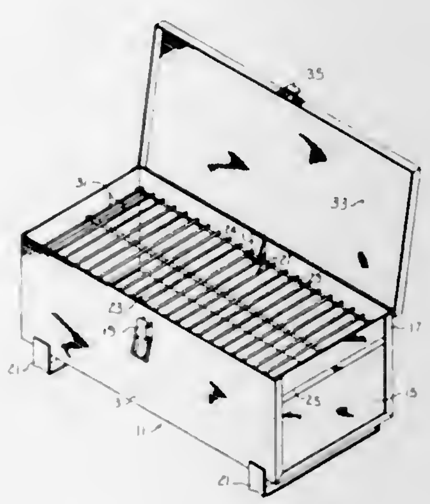

A charcoal burning stove has a box like configuration and a hinged lid with clamps for tightly closing the lid and thereby extinguishing the charcoal for subsequent uses; a handle on the lid gives portability and legs are provided for insulating the heat of the box from the surface on which it rests; a grill is supported by a projecting ledge inside of each end wall of the stove and by a projecting ledge guarded by a projecting cam portion inside of each side wall of the stove, the side walls flex to permit the grill to be snapped past the cam portions and thereby be locked in place.

3,395,692
PORTABLE GRILL
Mansel Johns, 5305 Barton Road, Madison, Wis. 53711
Filed May 12, 1967, Ser. No. 638,029
11 Claims. (Cl. 126—30)

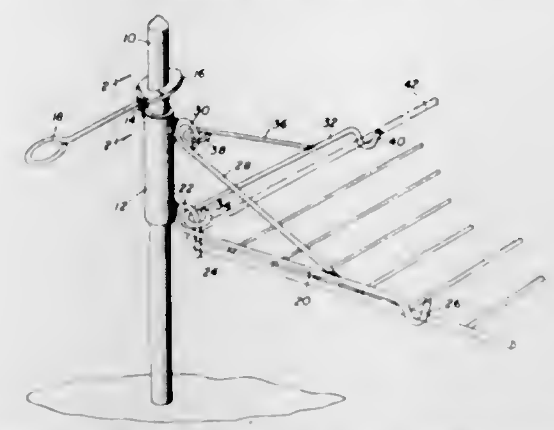

A portable grill that may be used interchangeably as a grill over an open fire such as at a campsite or indoors within a fireplace for indoor cooking. The apparatus is portable, collapsible and adjustable.

3,395,693
HIGH EFFICIENCY SPACE HEATER
Edwin J. Cowan, 275 Manzanita, Sierra Madre, Calif. 91024
Filed Mar. 15, 1967, Ser. No. 623,256
11 Claims. (Cl. 126—92)

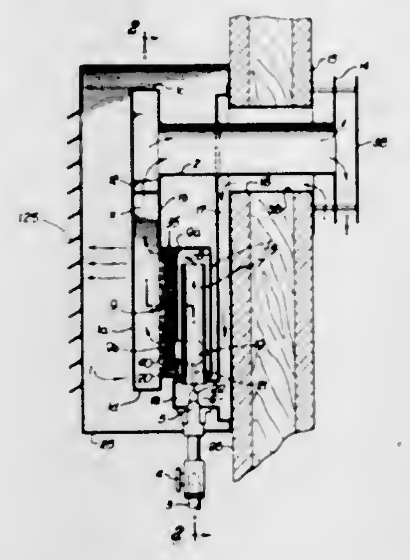

The disclosed heater employs a radiant burner structure to which gas and air are supplied effecting combustion closely adjacent the outlet side of a perforated ceramic grid. Combustion chamber structure at the outlet side of the grid forms an enclosed combustion zone, the chamber including a metal panel closely spaced from the grid and from which is derived infrared radiation of equal or higher intensity than that produced by the burner structure in the absence of the combustion chamber panel.

3,395,694
ADHESIVE HEATING APPARATUS
John E. Ullman, Huntingdon Valley, Pa., assignor to Huntingdon Incorporated, Bethayres, Pa., a corporation of Pennsylvania
Filed Oct. 22, 1965, Ser. No. 501,323
11 Claims. (Cl. 126—343.5)

Adhesive heating apparatus comprising a hopper adapted to receive an adhesive in solid form, a grid positioned in the hopper for supporting the solid adhesive, hot transfer fluid means for heating the grid to melt the adhesive into liquid form and pass it downwardly through the grid, a basin positioned beneath the grid for receiving and storing the liquid adhesive, said basin including an outer and inner jacket with a jacket space therebetween, a sump formed in the basin, a submersible pump mounted in the sump and adapted to be submerged by the liquid adhesive and heated thereby, a hot transfer fluid in the jacket space for heating the liquid adhesive in the basin to a desired pumping temperature, a number of hot adhesive lines extending from the pump and adapted to be connected to adhesive applicators, a line containing a hot transfer fluid positioned in the adhesive lines to heat the adhesive therein, and grid control means operating in response to liquid adhesive level in the basin for turning the grid heating means on and off, said grid control means including a float which rides in the basin adhesive and operates a control valve in a fluid line which feeds hot fluid to the grid to heat it.

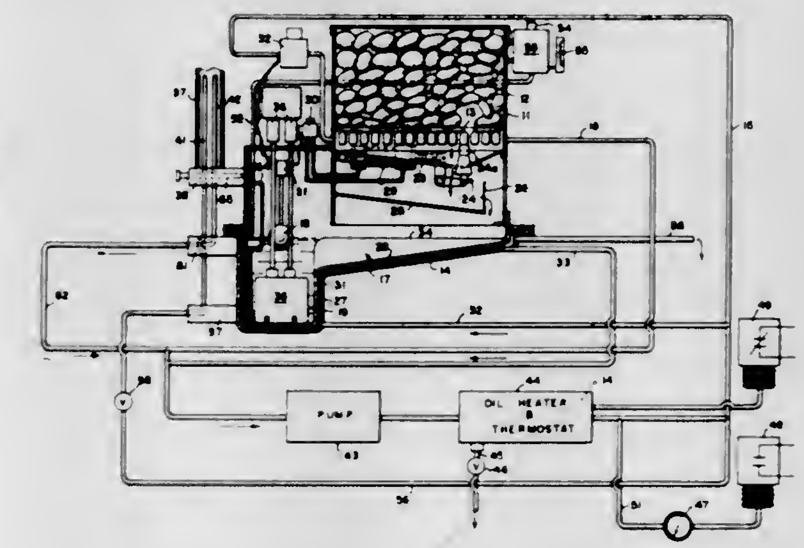

The apparatus also includes a collector pan positioned beneath the grid for catching the melted adhesive when the grid heating means is turned off. The collector pan is provided with a stop valve adapted to hold the adhesive in the collector pan. The stop valve is controlled by means operating in response to liquid adhesive level in the basin so that when the liquid reaches a pre-determined level the stop valve is closed.

A heat baffle pan and screen is positioned between the collector pan and the basin for inhibiting passage of heat from the basin to the grid, thereby preventing unwanted melting of the adhesive when the grid is turned off. The screen catches any foreign matter as the liquid adhesive passes through the screen from the collector pan to the basin.

3,395,695
COOKER HAVING A STEAM PRESSURE CONTROL VALVE
Jiro Nagashima, 753 Kamitaga, Atami-shi, Shizuoka-ken, Japan, and Akira Aoki, 230 Ida, Kawasaki-shi, Kanagawa-ken, Japan
Filed June 9, 1965, Ser. No. 462,491
Claims priority, application Japan, June 5, 1965, 40/32,968, 40/32,970
1 Claim. (Cl. 126—369)

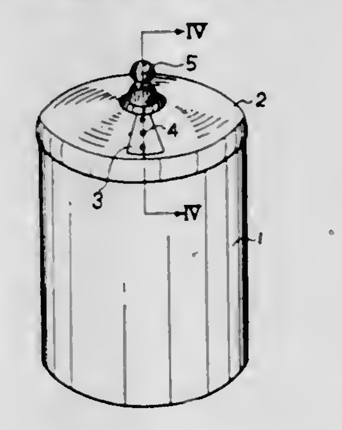

Pressure cooker having a steam pressure control valve having a fixed size aperture and a movable impervious

(b) a piston within said cylinder adapted to reciprocate between a fuel charge compressing position and an exhaust position,

(c) spring means biasing said piston toward the fuel charge compressing position,

(d) a fueling system including a carburetor having a choke, a fuel tank communicating with said carburetor and a passage establishing communication between said carburetor and said cylinder,

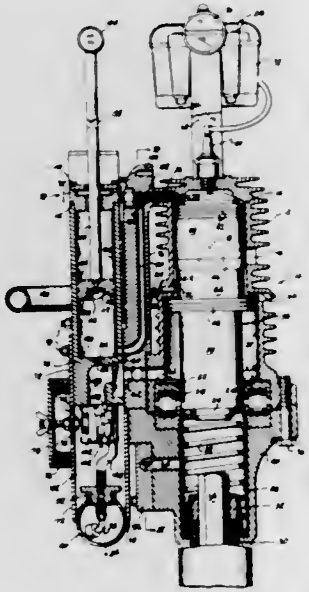

(e) a starting mechanism mounted on said body including a pump having a starter cylinder and a manually operated starter piston reciprocally mounted within said cylinder,

(f) a first passage establishing unidirectional communication between said carburetor and said starter cylinder and a second passage establishing unidirectional communication between said starter cylinder

3,395,690
INTERNAL COMBUSTION ENGINE
Robert M. Riley, Round Lake, Ill., assignor to International Harvester Company, a corporation of Delaware
Continuation of application Ser. No. 498,559, Oct. 20, 1965. This application May 5, 1967, Ser. No. 636,548
10 Claims. (Cl. 123—191)

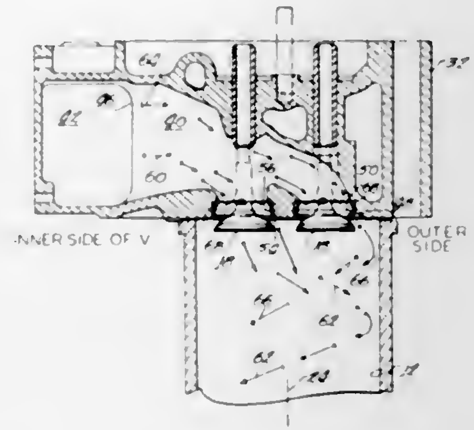

Method and cylinder-head passage structure for dual induction of swirling intake fluid into an engine cylinder in two stages. Initially fluid in the passage is emitted from dual, back-masked, flow directing ports which contribute in the proportions of about 50%–50% to the swirl producing component of the slow moving intake fluid. Then during main induction the fluid is emitted faster, and so that about 70% of the swirl component comes from that one of the dual ports which is at the extreme end of their tangentially disposed, common, single inlet passage, and only about 30% from the other port, which is at an intermediate location.

3,395,691

plate provided with groups of apertures. Each group of apertures has a total cross-sectional area different from that of any other group. The individual groups of apertures are selectively positioned in registry with the fixed size aperture, whereby a plurality of steam pressures can be selectively set in the pressure cooker.

3,395,696
PHYSIOLOGICAL FLUID TRANSFER APPARATUS
Alexander M. Brown, St. Louis, Mo., and Wayne K. Carrico, Ormond Beach, Fla., assignors to Roehr Products, Inc., a corporation of Delaware
Filed June 22, 1965, Ser. No. 465,966
9 Claims. (Cl. 128—2)

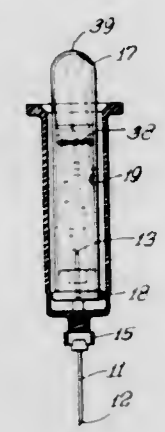

Physiological fluid transfer apparatus including a double ended needle provided with a hub mounted in a holder. One end of the needle is adapted to be urged through a plug closing one end of an evacuated tube. The hub is provided with an annular shoulder adapted to engage the sealing closure of the evacuated tube circumjacent the needle to prevent engagement of the closure with the laterally adjacent portions of the holder. The tube and holder are further provided with coordinating indicia means to indicate a disposition of the tube relative to the holder wherein the needle is implanted in the closure short of penetration thereof into the evacuated interior of the tube.

3,395,697
ACOUSTIC REFLEXOMETER
Emanuel S. Mendelson, Harleysville, Pa., assignor to the United States of America as represented by the Secretary of the Navy
Filed Dec. 8, 1965, Ser. No. 512,560
4 Claims. (Cl. 128—2)

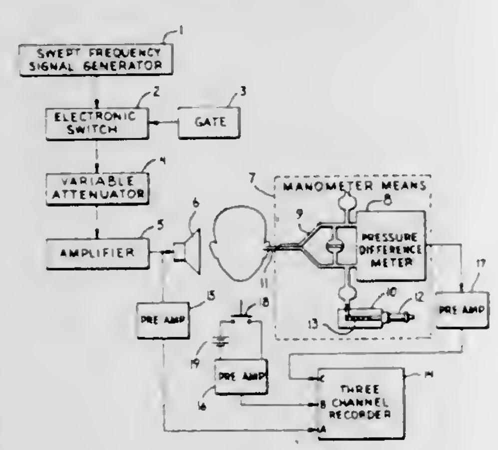

An apparatus for simultaneously detecting the hearing ability and tympanic membrane reflex motion of a human subject in response to pulsed acoustical stimuli comprising a motor-driven, swept-frequency audio signal generator coupled, via a multivibrator-gated electronic switch means and a variable attenuator, to an amplifier which drives a transducing means to produce the acoustical stimuli in the vicinity of the subject's external auditory canal. A manometer means including a differential pressure meter, a gas pressurized tube system having a catheter tip suitable for insertion in the subject's external auditory canal via the ear opposite the transducing means, and a highly accurate pressure calibrator means is provided for producing an electrical output signal proportional to the subject's tympanic membrane movements in response to the acoustical stimuli. A multichannel recorder is coupled to the amplifier driving the transducer for recording the acoustical stimuli, to the manometer means for recording the subject's tympanic membrane movements in response thereto, and to a pushbutton circuit for recording manual action thereof by the subject whenever he hears an audible tone.

3,395,698
PHYSIOLOGICALLY PACED ERGOMETRIC SYSTEM
Laurence E. Morehouse, Los Angeles, Calif., assignor, by mesne assignments, to McDonnell Douglas Corporation, Santa Monica, Calif., a corporation of Maryland
Filed Oct. 1, 1965, Ser. No. 492,033
11 Claims. (Cl. 128—2.05)

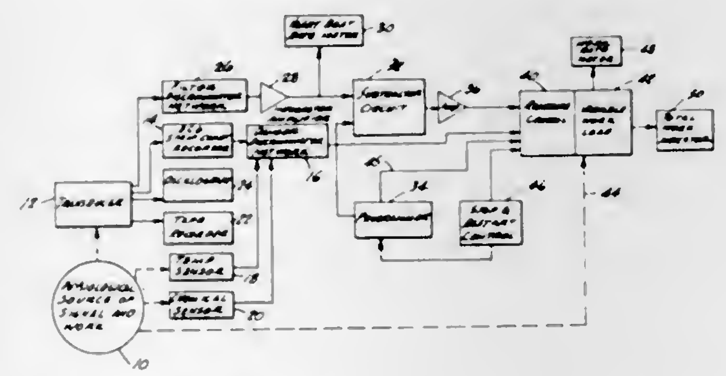

1. Automatic physiologically paced ergometric system comprising:
sensor transducer means of the character adapted to be coupled to a physiological source of work and source of physiological signal representative of the magnitude of such work at a given point in time for providing an electrical output signal responsive to and representative of physiological effort associated with said source of work;
electrical means coupled to said transducer means for generating an analog signal representative of the status of a predetermined physiological criterion associated with said source;
programmer means for generating an electrical analog signal representative of a program of desired status of said predetermined physiological criterion;
comparator means having input terminals coupled to said electrical means and to said programmer means for generating an error signal representative of distinctions between the said analog signals; and
variable work load means adapted to be mechanically coupled to said source of physiological work and having an electrically actuated control means for regulating the amount of work inputted to said load means, said control means being coupled to said comparator means.

3,395,699
SPIROMETER
Noel F. Beasley, Santa Monica, Calif., assignor to Puritan Compressed Gas Corporation, Kansas City, Mo., a corporation of Missouri
Filed Apr. 28, 1965, Ser. No. 451,433
13 Claims. (Cl. 128—2.08)

A spirometer continuously operable to monitor the tidal volume of respired gas. An expansible-contractible

bellows mounted within a transparent viewing dome receives gas expired by a patient during the expiratory phase of a breathing cycle and expands to afford a visual indication of tidal volume. Valve means, responsive to the positive pressure of gas delivered to the patient during the inspiratory phase of the subsequent breathing cycle,

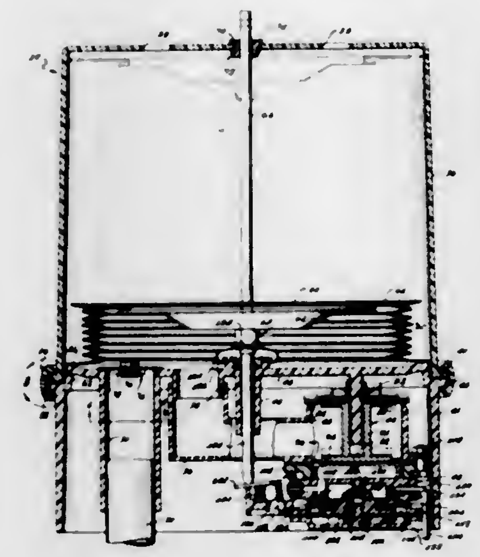

opens an outlet to the atmosphere to permit the bellows to return to its contracted condition during that phase. Upon such return, the valve means is automatically closed to block such outlet, thereby conditioning the bellows for receipt of expired gas during the expiratory phase that follows.

3,395,700
MOUTH-TO-MOUTH RESUSCITATION DEVICE
Milton Stillman, 1320 N. Callow Ave., Bremerton, Wash. 98310
Filed June 2, 1965, Ser. No. 460,704
2 Claims. (Cl. 128—145.5)

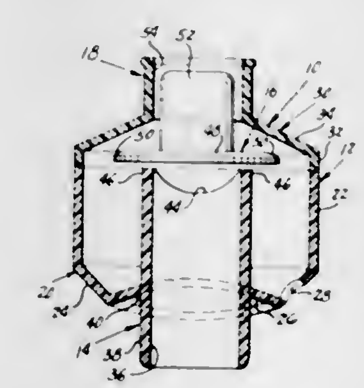

A mouth-to-mouth resuscitator comprising a single unitary body which includes a mouthpiece for a victim which forms a conduit extending into a chamber in the body and a mouthpiece for a rescuer, said chamber communicating exteriorly through an aperture, and a reciprocably mounted deflector plate in the chamber having a tongue extending into the rescuer's mouthpiece for preventing passage of saliva from the rescuer to the victim and removal of such saliva from the chamber is disclosed.

3,395,701
END TIDAL SAMPLER FOR AN OXYGEN BREATHING MASK
Roscoe G. Bartlett, Jr., Lime Kiln, and Edward J. Brunsman, Silver Spring, Md., assignors to the United States of America as represented by the Secretary of the Navy
Filed Oct. 29, 1965, Ser. No. 505,766
4 Claims. (Cl. 128—146.5)

An oxygen testing apparatus comprising a multi-chambered device adapted to be inserted in the lower portion of an oxygen breathing mask. A hypoxia sensor is connected to one of the chambers. A pair of flexible diaphragms form exterior walls on two of the chambers; one diaphragm being exposed to the interior of the mask and other diaphragm exposed to the ambient atmosphere. Appropriate one-way valves are provided connecting the chambers of the device whereby upon inspiration by the

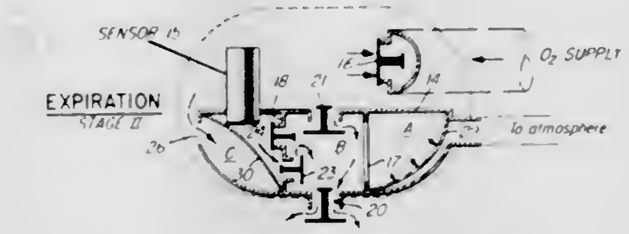

wearer of the mask, atmospheric pressure acting on one of the diaphragms forces the end tidal of the previous expiration into the chamber containing the hypoxia sensor, and upon expiration by the wearer the expired breath acting upon the second of the diaphragms forces the end tidal sample from the chamber containing the hypoxia sensor.

3,395,702
SKI CAP HAVING SAFETY FEATURES
William Wayne White, Apt. 2C, Surf Club, Pompano Beach, Fla. 33062
Filed Apr. 12, 1966, Ser. No. 541,992
7 Claims. (Cl. 128—151)

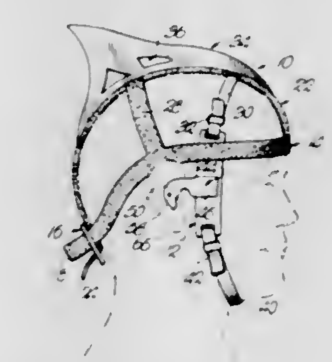

1. A water safety cap comprising:
a crown;
a pair of ear protector units for corresponding sides of said crown, each of said units including:
a link;
means dependently attaching said link to the crown at the corresponding side thereof;
an earplug adapted for complemental insertion into the external auditory canal of a respective ear of a wearer of the cap; and
structure mounting said plug on said link to dispose the plug laterally inwardly of the crown in alignment with the auditory canal for insertion thereinto when the cap is worn, said structure including biasing means yieldably urging said plug inwardly of the crown.

3,395,703
NEBULIZER
Alfred F. Chouinard, Chicago, and Allan E. Beeler, Bensenville, Ill., assignors to Chemetron Corporation, Chicago, Ill., a corporation of Delaware
Filed Oct. 22, 1965, Ser. No. 501,088
5 Claims. (Cl. 128—194)

A nebulizer apparatus for medical use having a body containing the nebulizer assembly and collar at the bot-

tom of the body engaging opposite sides of a deformable liquid container and toggle clamps connected between

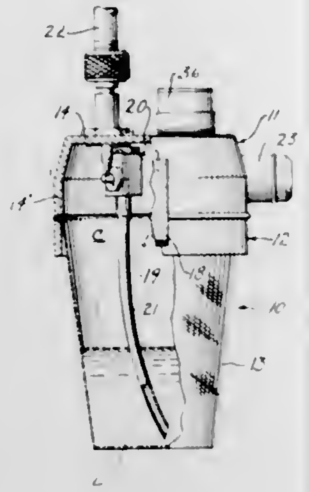

the body and the collar to compress the flange and to hold the nebulizer together as a unit.

3,395,704
POWER OPERATED SYRINGE
Max Frey, 3940 SW. Altadena Ave. 97201, and Alfred W. Keene, 7310 SW. 63rd Ave. 97219, both of Portland, Oreg.
Filed Nov. 19, 1964, Ser. No. 412,458
12 Claims. (Cl. 128—218)

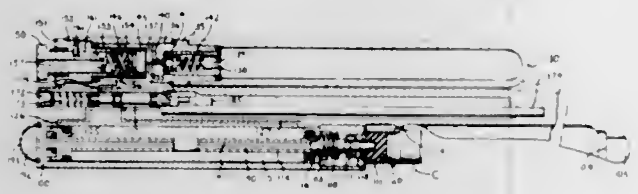

A power operated syringe arranged to actuate a carpule piston for injection or aspiration. The power source may be an electric motor with a self-contained battery or a piston motor operated by a self-contained compressed gas cartridge or external air pressure supply. The control features an elongated actuator bar movable to inject and aspirate without changing the position of the instrument in the operator's grasp. The instrument is equipped with a detachable side loading carpule holder.

3,395,705
MEDICAL SUCTION APPARATUS
Donald A. Hamilton, Burbank, Calif., assignor, by mesne assignments, to American Hospital Supply Corporation, a corporation of Illinois
Filed Oct. 18, 1965, Ser. No. 497,320
6 Claims. (Cl. 128—276)

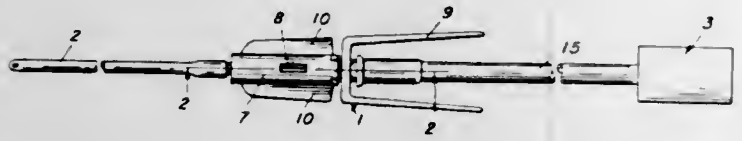

A regulator that fits in a suction line between a medical catheter and a suction pump. The regulator has an inner tubular member and an outer sleeve telescoped together with superimposed side vents that are progressively opened and closed by rotation of the sleeve relative to the tubular member. The sleeve has a laterally enlarged thumb pad surrounding the sleeve's side vent, whereby an operator can with his thumb either close off the vent or change the regulator setting by pushing on the thumb pad adjacent one edge.

3,395,706
NO-SEW, NO-FOLD DIAPER
Charles R. Higgins, Charlotte, N.C., and John G. Whalen, Lawrence Township, Mercer County, N.J., assignors to The Kendall Company, Boston, Mass., a corporation of Massachusetts
Filed June 14, 1965, Ser. No. 463,507
14 Claims. (Cl. 128—284)

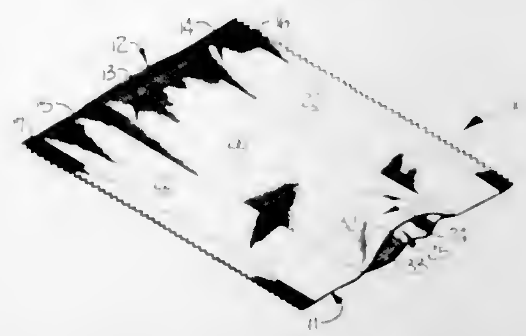

A woven diaper devoid of any stitching and woven of a size ready for use on a wearer without the necessity of folding, and wherein the diaper has a multi-layer, highly absorbent center panel extending fillingwise, with the opposite ends thereof being defined by selvages, with the selvages at one end thereof defining an access opening into the interior of the center panel for facilitating laundering thereof and to permit the insertion of a pad therein, if desired, for added absorbency, and wherein a pinning panel is connected to each side of the center panel and constructed to facilitate penetration of pins therethrough, and wherein pinking panels are in turn connected to the pinning panels along the sides thereof and constructed to resist raveling.

3,395,707
CONVERTIBLE DIAPER
John G. Whalen, Trenton, N.J., and Charles R. Higgins, Charlotte, N.C., assignors to The Kendall Company, Boston, Mass., a corporation of Massachusetts
Continuation-in-part of application Ser. No. 463,507, June 14, 1965. This application Mar. 7, 1966, Ser. No. 532,257
10 Claims. (Cl. 128—284)

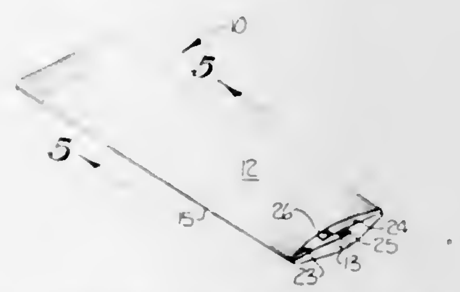

A diaper constructed for selective use in one form on a small infant and in another form on a larger infant, and wherein the diaper is formed with a tubular central portion having an open end for permitting turning the diaper inside out to position side fabric portions within the tubular central portion in converting the full width diaper into a smaller size for use on small infants.

3,395,708
METHOD FOR IMPROVING A FLUFFED FIBROUS WOOD PULP BATT FOR USE IN SANITARY PRODUCTS AND THE PRODUCTS THEREOF
Laurence R. B. Hervey, West Concord, Mass., and Donald K. George, Greenwood, S.C., assignors, by direct and mesne assignments, to Riegel Textile Corporation, New York, N.Y., a corporation of Delaware
Filed Nov. 9, 1966, Ser. No. 593,004
5 Claims. (Cl. 128—284)

A method for improving a fluffed fibrous wood pulp batt and the resulting product thereof comprising impregnating a wet slurry of wood pulp with a cationic debonding agent, forming the wet slurry into a wet pressed wood pulp sheet, drying, mechanically fiberizing the sheet and air-laying the fibers to form a fluffed fibrous wood pulp batt. This method and improved product provides a fluffed fibrous wood pulp batt which is substantially completely

fiberized to eliminate undesirable residual sheet particles and minimize fiber breakage and dust to provide longer, stronger and more uniform fibers for producing greater loft, moisture absorption and strength in the batt to adapt the same for use in sanitary products or the like.

3,395,709
METHOD AND MEANS FOR CARTILAGE RESHAPING
Frank F. Rubin, 131 Monroe Road, Quincy, Mass. 02169
Filed Jan. 3, 1966, Ser. No. 518,157
12 Claims. (Cl. 128—305)

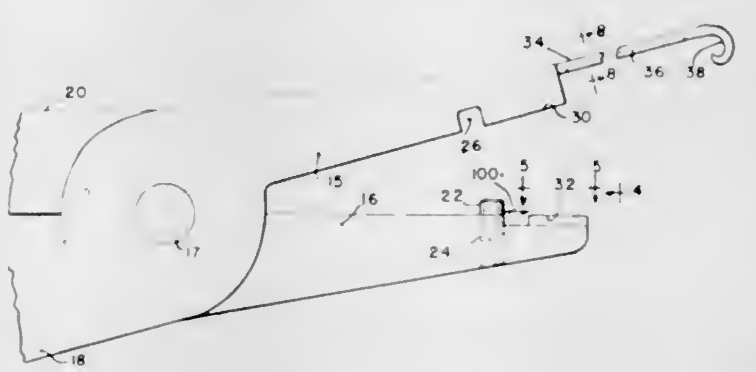

1. In an instrument for mechanically softening cartilage members for physical reshaping, the combination of a pair of jaws with one jaw having a substantially smooth surface and the other jaw having a plurality of masticating members projecting therefrom in the direction of the smooth surface, stop means associated with said jaws for limiting movement of said masticating jaw toward said smooth jaw, and means coupled to said jaws for pressurably moving said jaws toward each other.

3,395,710
GASTRO-INTESTINAL TUBE WITH INFLATABLE WEIGHT RELEASING MEANS
Robert A. Stratton, 1913 6th Ave., and Fritz Wach, 2176 7th Ave., both of Yuma, Ariz. 85364
Filed June 14, 1965, Ser. No. 463,574
8 Claims. (Cl. 128—350)

Gastro-intestinal suction and medication introduction apparatus comprising a bi-lumenal, flexible tube having a smaller lumen within a larger one and inflatable means near the lower end of the smaller lumen adapted to inflate to substantially constrict the passageway of the larger lumen; a weighted object, such as a thin-walled rubber bag of mercury, a flexible element such as a thread secured to the bag and an enlargement secured to the opposite end of the thread from the bag, the enlargement adapted to be releasably retained in the tube larger lumen by inflation of the inflatable means to dispose the weighted bag relatively freely a short distance beyond the lower end of the tube.

A method of assembling, inserting, employing and withdrawing the tube is also described.

3,395,711
SURGICAL TUBE
Louis F. Plzak, Jr., 1 Glen Brook Road, Wellesley, Mass. 02181
Filed May 26, 1965, Ser. No. 458,856
5 Claims. (Cl. 128—351)

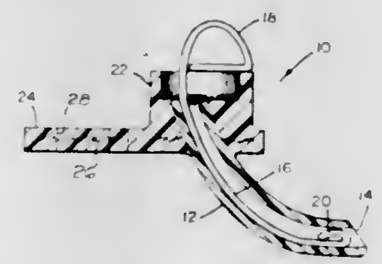

A relatively soft and flexible surgical tube having a flange portion, an adapter for connection to respiratory equipment and a wire obdurator removably received in the tube to assist in introducing the relatively soft and flexible tube into the trachea.

3,395,712
REINFORCED ELASTIC FOUNDATION GARMENT
Mario Laguzzi, Long Island City, N.Y., assignor to Poirette Corsets, Inc., New York, N.Y.
Filed May 9, 1967, Ser. No. 637,258
13 Claims. (Cl. 128—539)

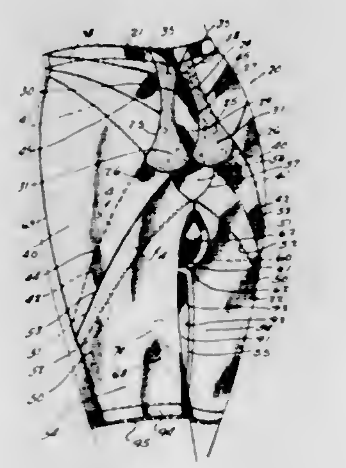

A foundation garment characterized by multiple elastic panels having connected reverted edges defining double thickness reinforcing areas of generally X-shaped configuration overlying the abdomen of the wearer, and correspondingly connected reverted edges defining reinforcing areas of generally V-shaped configuration converging downwardly over the buttocks. The reinforcing strips so formed converge in width from the center of the garment toward the sides.

3,395,713
FILTERING ARRANGEMENT FOR SMOKING ARTICLES
Anni Ent-Keller, Foebrehus, Switzerland, assignor to Hans Ent-Keller, Foehrehus, Switzerland
Filed Mar. 8, 1965, Ser. No. 437,721
Claims priority, application Switzerland, Mar. 10, 1964, 3,165/64
7 Claims. (Cl. 131—10.7)

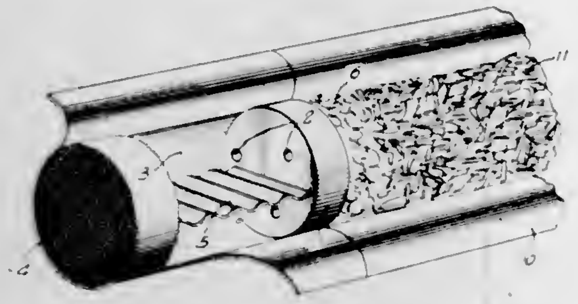

A condensation chamber is formed between a filter-mouth piece and the tobacco filling of a cigarette by placing a disk with an orifice against the tobacco and leaving space for a chamber, and placing a longitudinal membrane into the chamber, the internal walls of the chamber being provided with an absorbing surface such as gelatine.

3,395,714
CIGARETTE HAVING PLASTIC SHEET LINED WRAPPER
Wilhelm Kahane, New York, N.Y., assignor to Wilhelm Kahane, New York, N.Y., and Magdalena Efros and Norbert Efros, both of Naworth, N.J., an association
Filed June 15, 1964, Ser. No. 375,004
3 Claims. (Cl. 131—15)

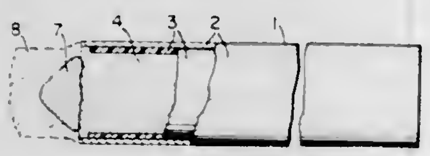

1. A cigarette whose wrapper is a composite one, said wrapper being composed of two thin sheets: one of them, that which is located at the outside of the cigarette, being a sheet of unperforated conventional cigarette paper; while the other sheet, that which is located in the wrapper toward the inside of the cigarette, as a liner beneath the former, is made of a heat-insulating plastic material whose melting-point is lower than 440° C. and which, when heated, does not emit fumes that are toxic or unpleasant.

3,395,715
TOBACCO PIPE
Walter Felder, 162 Ellison Road, Streatham, London SW. 16, England
Filed Sept. 8, 1966, Ser. No. 578,045
Claims priority, application Great Britain, Oct. 29, 1965, 45,799/65; Mar. 31, 1966, 14,219/66
6 Claims. (Cl. 131—184)

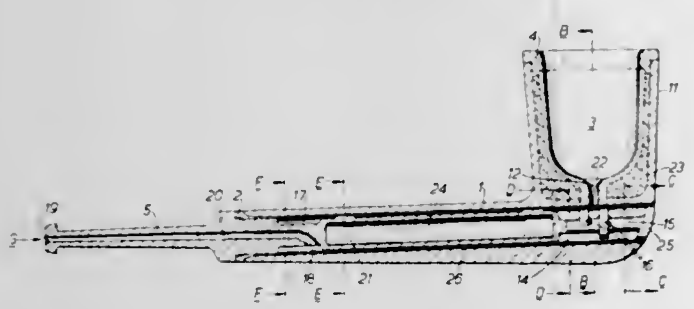

1. A tobacco pipe comprising in combination: a pipe bowl, a pipe stem integral with said bowl, a longitudinal bore means being provided throughout the length of said pipe stem, a mouth piece member having an extension inserted in said bore means, said extension having a middle portion of an external diameter slightly smaller than the internal diameter of said bore and two reduced diameter portions fore and aft of said middle portion, said middle portion leaving a narrow space between its periphery and the internal surface of said bore forming an annular duct, and said reduced diameter portions forming two moisture trap chambers between themselves and said bore, one of said chambers being located adjacent said bowl and in communication therewith, and the other chamber being adjacent the free end of said pipe stem and in communication with a bore in said mouth piece member leading outside, said two moisture trap chambers being in communication with each other by said annular duct.

3,395,716
PERMANENT WAVE CLIP
James W. Erb, Box 596, Battle Creek, Mich. 49017
Filed July 5, 1966, Ser. No. 562,708
4 Claims. (Cl. 132—40)

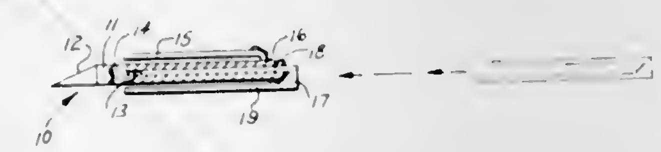

1. An improved permanent wave clip comprising, in combination, a substantially elongated rod including an elongated aperture therein, a sharpened end portion extending outwardly from said rod for guiding said permanent wave clip during the hair curling operation, an elongated stationary clip permanently attached to one side of said rod for securing a portion of hair between said stationary clip and said rod, a U-shaped auxiliary clip, one end of said clip being removably positioned within said aperture of said rod for providing supplemental securing means for hair located between the external portion of said auxiliary clip and said rod.

3,395,717
COLLAPSIBLE UMBRELLA
Heinz Weber, Hilden, Rhineland, Germany, assignor to Bremshey & Co., Solingen-Ohligs, Germany, a corporation of Germany
Filed Apr. 27, 1967, Ser. No. 634,245
Claims priority, application Germany, Apr. 28, 1966, B 86,863
6 Claims. (Cl. 135—26)

Collapsible umbrella has a stick, a system of roof-supporting ribs each consisting of an upper rib portion pivotally connected to the normally upper end of the stick and at least another rib portion telescoping the upper rib portion, an auxiliary runner or slider displaceable along the stick, said auxiliary runner having an inner surface, a plurality of struts, each of which is pivotally linked with the runner and with one of the roof-supporting ribs, and means tending to oppose the sliding of the runner along the stick as the umbrella is being opened, comprising a wedge member extending axially along the inner surface of the auxiliary runner and movable in a direction toward the normally upper end of the stick, said wedge member, during an initial phase of the sliding of the auxiliary runner when opening the umbrella roof, being in wedging abutment on one side with the stick and on the other side with an oppositely inclined wedge surface formed on the inner surface of the auxiliary runner, and, in a succeeding phase of the sliding of the auxiliary runner, being loosely received in a space located between the stick and the auxiliary runner so that the wedge is no longer in wedging abutment with the stick and the auxiliary runner.

3,395,718
SPEED SENSING METHOD AND APPARATUS
George D. Wolff, 22565 Statler Blvd., St. Clair Shores, Mich. 48081
Filed Mar. 22, 1966, Ser. No. 536,400
12 Claims. (Cl. 137—12)

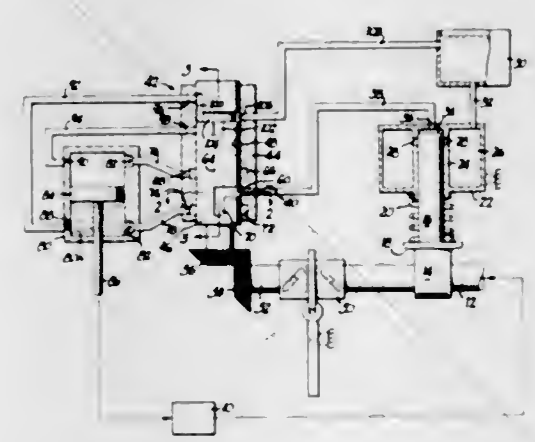

1. The method of generating a signal representative of a variation in the speed of a driven shaft comprising the steps of generating a series of pressure pulses at a frequency proportional to the speed of the shaft, feeding the pulses through a conduit of a length such that a finite length of time is required for the pulse to traverse the conduit, cyclically moving a pulse dividing member laterally across the pulse receiving end of said conduit in cyclic movement synchronized with the speed of the shaft to conduct a portion of the pulse from said receiving end of said conduit to an outlet, the magnitude of said portion of said pulse being determined by the position of said dividing member laterally of said pulse receiving end of said conduit at the time of arrival of said pulse whereby said portion of said pulse defines a signal representative of the shaft speed.

2. For use in combination with a cyclically movable driven member, variable speed drive means coupled to said member to drive said driven member in cyclic movement, and control means actuable to control said drive means to vary the speed of cyclic movement of said driven member; speed sensing means comprising a conduit, pulse means for feeding a continuous series of pressure pulses into said conduit at a frequency proportional to the cyclic frequency of movement of said driven member, said conduit being of a length such that a finite length of time is required for a pulse to traverse said conduit, pulse dividing means having an inlet connected to said conduit and outlet means, a pulse dividing member in said dividing means having passage means for transmitting pressure pulses to said outlet means and having a passage opening movable laterally across the inlet of said dividing means, means for driving said dividing member in cyclic movement synchronized with the speed of cyclic movement of said driven member to move said passage opening laterally across said inlet opening of said dividing means during a portion only of each cycle, and pressure responsive means connected to said dividing means for actuating said control means.

3,395,719
FLUID-OPERATED CONTROL SYSTEM
Willis A. Boothe and Warren A. Lanza, Scotia, N.Y., assignors to General Electric Company, a corporation of New York
Filed Sept. 23, 1964, Ser. No. 398,686
12 Claims. (Cl. 137—22)

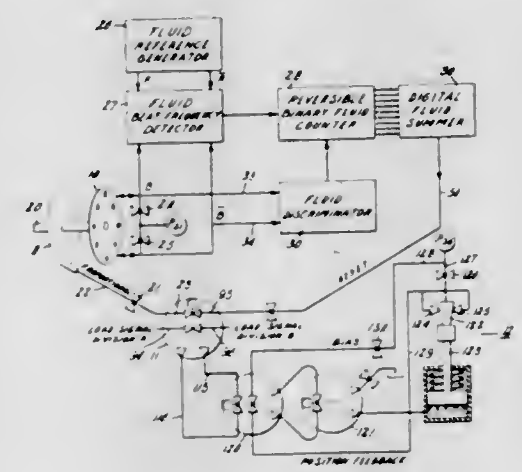

A hybrid fluidic control system comprises analog and digital fluidic circuits. The analog circuit includes an analog sensor for generating proportional type fluid signals proportional to the monitored value of error of a system parameter. The digital circuit includes a digital sensor, reference and beat frequency detector for generating fluid pulses of frequency equal to the difference between monitored and reference pulse frequencies. A fluidic binary counter and digital summer convert the difference-frequency pulses to a reset fluid signal proportional to the integral of the system parameter error. The proportional plus reset outputs of the respective analog and digital circuits are combined in an analog-type fluid amplifier which provides a transient fluid signal during an error between the monitored and reference value of the system parameter.

3,395,720
MAGNETOHYDRODYNAMIC-VORTEX STREAM TRANSDUCER
John D. Brooks, Alhambra, Calif., assignor to the United States of America as represented by the Secretary of the Navy
Filed Feb. 24, 1965, Ser. No. 435,096
4 Claims. (Cl. 137—81.5)

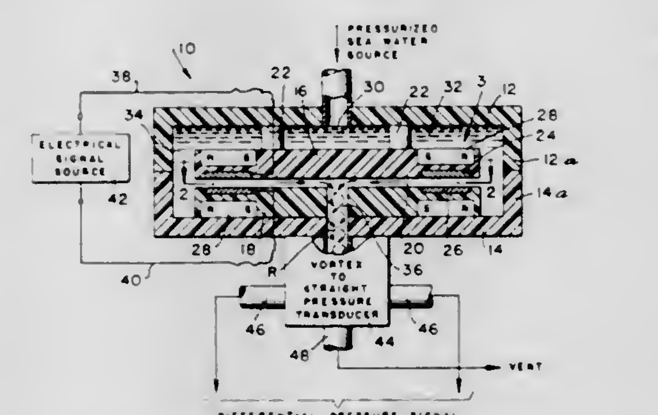

A transducer for converting an electrical signal to a fluid vortex signal comprising a thin, disc-shaped cham-

ber, adapted to receive an electrically conductive fluid at its outer periphery, and having a central fluid outlet in one of its lateral walls. A pair of annular electrode plates are mounted in the lateral walls of the chamber in confronting relationship to each other, and adjacent the outer periphery of the chamber, to provide an electric force field therebetween. Behind the electrode plates in each wall is a circular row of radially oriented bar magnets poled to generate a radial magnetic field. The crossed magnetic and electric force fields cause the conductive fluid to leave the outlet as a vortex stream having in intensity and angular direction of motion in accordance with the signal applied across the annular electrodes.

3,395,721
AUTOMATIC REGULATOR OF LIQUID CLEARING INCORPORATED IN THE PIPE LINE
Kiyoshi Shibata, Soka-shi, Saitama-ken, Japan, assignor to Ishikawajima-Harima Jukogyo Kabushiki Kaisha, Tokyo-to, Japan, a company of Japan
Filed Apr. 13, 1964, Ser. No. 359,327
Claims priority, application Japan, Aug. 29, 1963, 38/45,316
4 Claims. (Cl. 137—87)

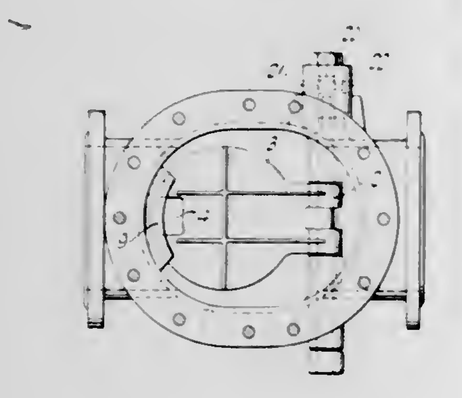

1. Automatic liquid pumping regulator comprising a tank, a pipe connected to said tank, valve means incorporated in said pipe and including a swingable sealing vane responding to the pressure of the incoming liquid through said pipe to be turned to an open position, a float movable with the surface of said liquid, lock means operably connected to said vane and to said float for locking said vane in its open position at a certain level of said liquid surface with floating force and to release said vane for movement away from said open position at a certain level of lowering liquid surface due to loss of the floating force of said float, a vane shaft and bearing therefor, said shaft and bearing being formed with holes bored in the shaft of said vane and in said bearing, said hole being in line to pass compressed air to a signal generator to warn the end of the pumping operation when said vane is in a predetermined position and the tank is empty.

3,395,722
CONTROL VALVE FOR HIGH-PRESSURE PUMPS AND THE LIKE
Willy Heinrich, Rheinkamp-Repelen, Germany, assignor to Woma Apparatebau Wolfgang Maasberg & Co., G.m.b.H., Rheinhausen, Germany
Filed June 15, 1965, Ser. No. 464,055
8 Claims. (Cl. 137—108)

A control-valve arrangement for a high-pressure pump which includes a stack of Belleville washers bearing upon a pump piston exposed to fluid pressure at the high-pressure side of the pump and displaceable against the Belleville washers which can be adjustably compressed by coarse and fine adjustments acting upon a rod forming a seat for the Belleville washers, the pump system carrying a first valve member engageable with a seat between the inlet and outlet sides of the pump and a second, spring-

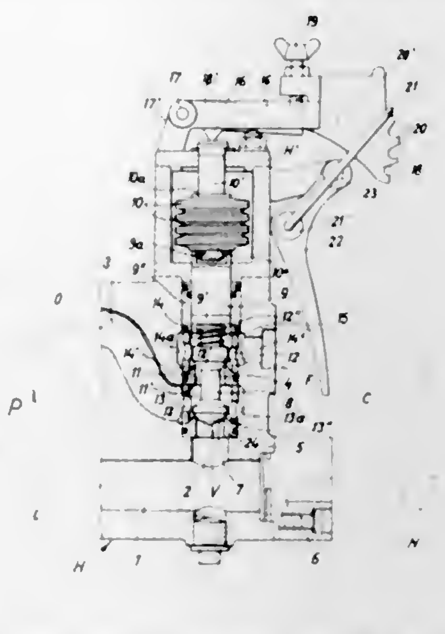

loaded valve member engageable with a seat between the discharge side of the pump and the outlet of the valve.

3,395,723
GASOLINE FILLING STATION
Hiyoshi Tatsuno, 161 Azabu-Hommura-cho Minato-ku, Tokyo, Japan
Filed Aug. 19, 1965, Ser. No. 481,141
8 Claims. (Cl. 137—355.22)

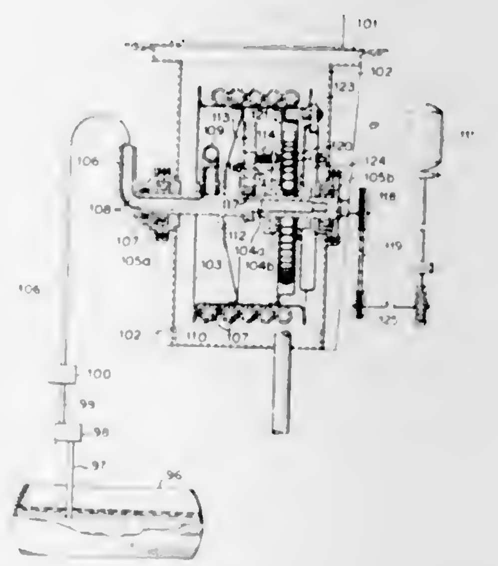

Supplying fuel to vehicles from a reservoir having a fixed pipe leading therefrom, a flexible pipe connected to the fixed pipe, a reel, and a driving mechanism for rotating the reel and thereby raising and lowering the flexible pipe wherein the flexible pipe may be automatically lowered from a completely contracted position to a waiting position, from which position it may be manually lowered to a fuel supplying position and wherein the flexible pipe may be raised from the fuel supplying position to either the waiting position or the completely contracted position.

3,395,724
PIERCING VALVE
William J. Hamel, St. Albans, W. Va., assignor to Union Carbide Corporation, a corporation of New York
Filed Oct. 22, 1965, Ser. No. 501,012
2 Claims. (Cl. 137—318)

A piercing valve is described in this application which constitutes an improvement on the so-called "vise grip." Two relatively thick body portions are attached to the jaws of a wrench such as that described in U.S. Patent 2,514,130. Each body portion contains oppositely situated transverse grooves so as to define an enclosure for a tubing when the jaws are in grip position. The upper body portion is provided with a housing having a hollow vertical section and a lateral passageway. Furthermore, it also contains a solid vertical member extending through

the hollow section, which solid member has a lower needle-like construction and an upper end which is pivotally connected to a depressible handle adapted to axially depress the solid member so that the needle-like end pierces the tubing.

3,395,725
COMBINATION BALL CHECK AND NEEDLE VALVE
Donald E. Roach, Port Huron, Mich., assignor to McDowell-Wellman Engineering Co., Cleveland, Ohio, a corporation of Ohio
Filed Oct. 18, 1965, Ser. No. 497,336
5 Claims. (Cl. 137—512.15)

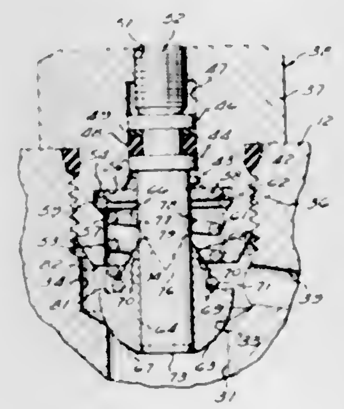

A combination ball check and needle valve for controlling the rate of flow in one direction including a valve body formed with a longitudinal guide passage, a cylindrical metering stem axially movable in the guide passage, and a poppet guided for movement along the metering stem and spring biased to seal with a valve seat. The metering stem is provided with a longitudinal passage open to the lateral surface of the stem. The poppet is formed with a pressure actuated lip seal end adapted to cooperate with the lateral opening and adjustably restrict the flow through the assembly in one direction. A positive pressure gradient across the valve assembly in the opposite direction will cause the poppet to be axially displaced against the spring bias and provide substantially unrestricted flow in that direction. The biasing spring further serves to hold the poppet on the metering stem prior to assembly, and to lock the metering stem in the valve body.

3,395,726
MASS FLOW MEASURING APPARATUS
John D. Cross, St. Albans, and Laurence Goodwin, London, England, assignors to The De Havilland Aircraft Company Limited, Hatfield, England, a company of Great Britain
Filed June 14, 1966, Ser. No. 557,413
Claims priority, application Great Britain, May 10, 1963, 14,663/63
19 Claims. (Cl. 137—468)

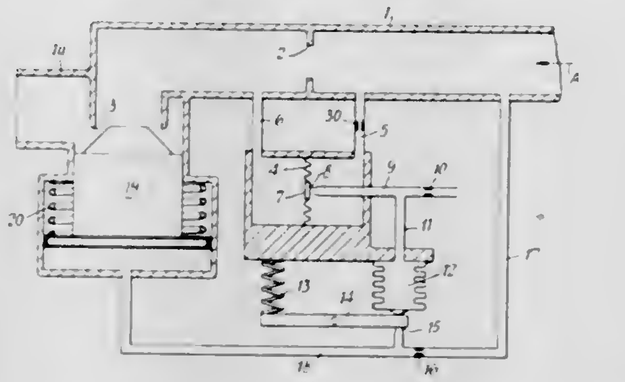

The invention is concerned with apparatus for measuring and controlling the flow of a fluid, in which a subsidiary flow line is provided to carry a proportion of the main flow and to generate a reference pressure which is both a measure of the flow and is used directly to control the flow. Preferably temperature compensating means are included so that the apparatus maintains a constant mass flow.

3,395,727
CHECK VALVE
Irvin B. Weise, Bellaire, and Henry G. Butler, Houston, Tex., assignors to Anderson Greenwood & Co., Houston, Tex., a corporation of Texas
Filed Mar. 1, 1965, Ser. No. 435,872
6 Claims. (Cl. 137—527.4)

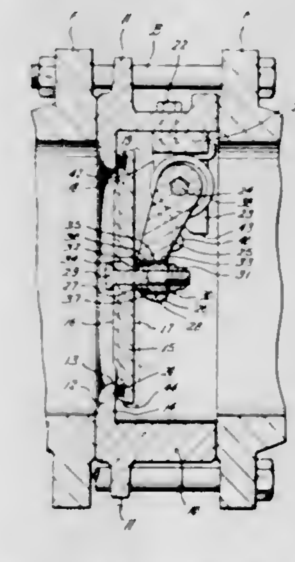

A flapper-type check valve employing a specialized form of lost-motion connection between the closure plate and its hinge arm, the connection being operative to allow some angular movement of the closure plate relative to the seat through only a very limited portion of its travel in its initial opening and final closing movements.

3,395,728
ONE WAY SEAL
Jack W. Tamplen, Celino, Tex., assignor to Otis Engineering Corporation, Dallas, Tex., a corporation of Delaware
Original application June 10, 1964, Ser. No. 374,046, now Patent No. 3,227,462, dated Jan. 4, 1966. Divided and this application Sept. 10, 1965, Ser. No. 495,746
5 Claims. (Cl. 137—525)

1. A one-way seal device including: a central member; an annular member surrounding said central member and

spaced therefrom to provide a flow passage therebetween; an annular recess means in one of said members opening to said annular flow passage between said members; an O-ring disposed in said recess and engageable with one wall surface of said member having the recess therein adjacent said annular space between the members and engageable with the adjacent surface of the other member to seal therebetween; and a flow passing member disposed in said recess and having planar supporting sur-

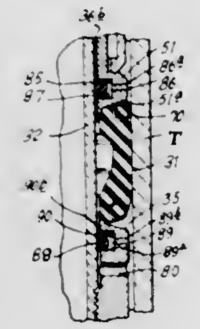

face means engageable with said O-ring preventing sealing engagement with said O-ring with the wall surface of said recess opposite said one wall surface and flow passage means thereon in a surface facing opposite and spaced from said supporting surface and the O-ring supported thereby to permit flow of fluids past said O-ring through said annular space between said members, said supporting surface preventing engagement of said O-ring with said flow passage means at any position of said O-ring.

3,395,729
CHECK VALVE
Fred Temple, Pittsburgh, Pa., assignor to Westinghouse Air Brake Company, Wilmerding, Pa., a corporation of Pennsylvania
Filed Sept. 16, 1965, Ser. No. 487,687
2 Claims. (Cl. 137—543.19)

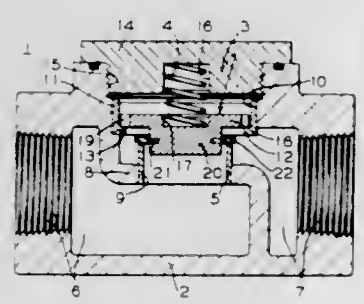

1. A check valve device comprising:
(a) a valve body having an inlet port and an outlet port with a partition having a flow passage therethrough connecting the inlet and outlet ports, said valve body further having an opening through the wall thereof substantially coaxial with the passage through said partition and in communication with said outlet port,
(b) a closure element removably securable to said valve body to sealingly close said opening,
(c) a check valve controlling flow of fluid under pressure through said passage, said check valve being installed through said opening and comprising:
(i) a member formed with a central cylindrical portion having a flange at one end extending radially ouwtard therefrom, said flange being provided with a plurality of grooves to convey fluid under pressure from the outlet port to the upper face of said member,
(ii) a flat annular resilient valve element carried on said cylindrical portion in spaced-apart relation to said flange portion of said member,
(d) annular sleeve means secured in said passage in said partition and having an annular valve seat at the upper end thereof on which said resilient valve element seats, said cylindrical portion of said member extending into said annular sleeve means and conforming closely in diameter to the internal diameter of said sleeve means so as to limit to a low area the effective area of said valve element over which reverse acting fluid under pressure in the outlet port is effective to maintain seating thereof,
(e) means disposed between said closure element and said member to bias said member in a direction to seat the resilient valve element on said valve seat, and
(f) stop means carried by said valve body and engageable by said flange of said member following seating of said resilient valve element on said valve seat such that movement of said member toward said valve seat and flexing of said valve element by engagement with said seat is limited.

3,395,730
DEVICES FOR DIVIDING INTO AT LEAST TWO PORTIONS A STREAM OF A MIXTURE OF A LIQUID FLUID AND A GASEOUS FLUID
André Louis Mennesson, Neuilly-sur-Seine, France, assignor to Societe Industrielle de Brevets et d'Etudes S.I.B.E., Neuilly-sur-Seine, Hauts-de-Seine, France, a French society
Filed June 24, 1966, Ser. No. 560,249
Claims priority, application France, June 24, 1965, 22,140
14 Claims. (Cl. 137—561)

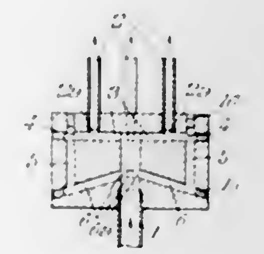

1. A device for dividing into at least two portions a steam of a mixture of a liquid fluid and a gaseous fluid, which comprises in combination,
a mixture inlet pipe,
at least two mixture outlet pipes,
means forming a mixture main path connecting the outlet end of said inlet pipe with the inlets of said outlet pipes, said main path extending substantially at right angles to said mixture outlet pipe inlets,
and means forming a mixture auxiliary circuit including a first portion extending from said mixture main path outwardly beyond said outlet pipe inlets and a second portion starting from said first portion outer ends and leading into said mixture inlet pipe upstream of the outlet end thereof.

3,395,731
FLUID CONVEYOR SWITCH
John H. Kauffman, Crystal Lake, Ill., assignor, by mesne assignments, to National Engineering Company, Chicago, Ill., a corporation of Delaware
Filed June 7, 1965, Ser. No. 461,883
12 Claims. (Cl. 137—610)

A switching device for interconnecting a main fluid duct with a selected one of a plurality of branch ducts including, a curver tubular duct element having one end rotatively coupled to the end of the main fluid duct and an open opposite end adapted to communicate with said branch ducts. A support for mounting the curved duct element for pivotal movement about an axis centrally aligned with the rotatively coupled end thereof, the opposite end of the curved duct element being movable upon rotation thereof between a first position aligned with one of the branch ducts and a second position aligned with the other. An actuator for pivotally moving the duct element between the first and second aligned positions. Annular cou-

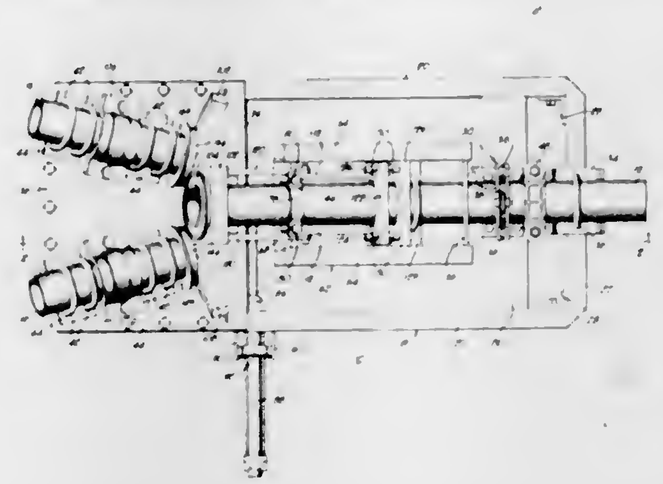

pling means slidably mounted on the curved duct element for movement toward and away from the open end for coupling engagement between the curved duct element and a selective one of the branch ducts, and an actuator for moving the coupling into and out of coupling engagement with the selected branch duct.

3,395,732
ATTACHMENT CONTROL SELECTOR
Samuel T. Comfort, Homewood, Ill., assignor to Allis-Chalmers Manufacturing Company, Milwaukee, Wis.
Filed May 25, 1966, Ser. No. 552,924
6 Claims. (Cl. 137—636.2)

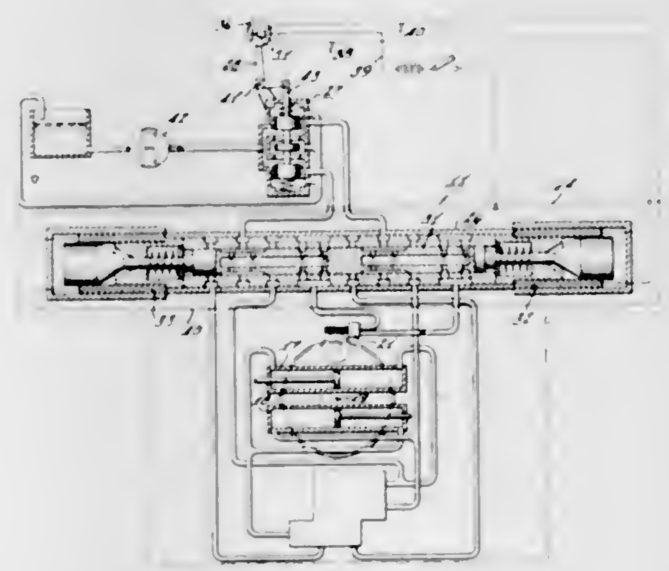

1. In a control system for a multiple function material handling attachment having a plurality of fluid motors for operating same, the combination comprising:
control valve shiftable between neutral and attachment operating positions,
a manually operated control lever connected to said control valve having a knob part pivotally connected to an end part of said lever,
walls on said knob part defining an interior cavity,
an electrically operated selector valve shiftable to a plurality of control positions,
electric means controlling said selector valve including a control switch for said selector valve disposed within said cavity and secured to one of said parts, said switch including a switch actuating element shiftable between a plurality of control positions, and
abutment means on the other of said parts in confronting relation to said actuating element, said abutment means engaging said actuating element and shifting same upon said knob part being pivoted a predetermined extent relative to said end part.

3,395,733
SPHERICAL PLURAL VALVE ACTUATOR MIXING VALVE
Lloyd Spencer, 220 Patrician Way, Pasadena, Calif. 91105
Filed Oct. 11, 1965, Ser. No. 494,382
7 Claims. (Cl. 137—636.2)

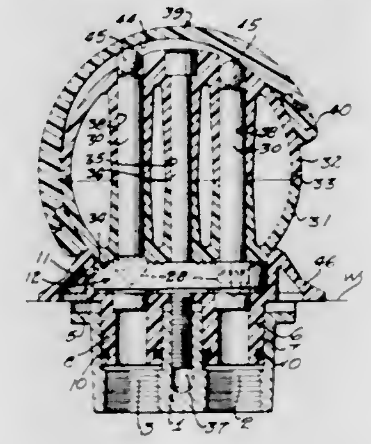

A mixing valve in which an exposed cap is journalled on a spherical journal and is provided with cam areas confronting the journal which are engaged by cam followers extending from a pair of valves through the journal. The movement of the cap is limited by exposed annular confronting stop shoulders, one of which is cam contoured.

3,395,734
DUAL HANDLE MIXING VALVE
Lloyd Spencer, 220 Patrician Way, Pasadena, Calif. 91105
Filed Oct. 14, 1965, Ser. No. 496,050
5 Claims. (Cl. 137—637)

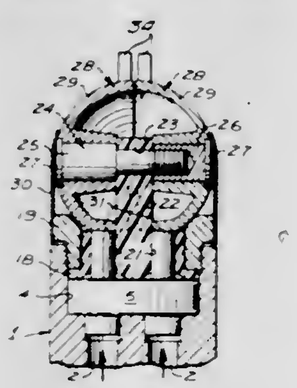

1. A dual handle mixing valve, comprising:
(a) a valve body including a pair of contiguous parallel inlet bores and an outlet common to said inlet bores;
(b) valve means for controlling flow from said inlet bores to said outlet bore, including a pair of cam followers;
(c) a pair of contiguous cam disks having a common axis of rotation, confronting arcuate slots, and arcuate cam faces engageable with said cam followers;
(d) means for journalling said cam disks within the limits of said cam faces;
(e) a pair of handles for said cam disks disposed in contiguous relation for simultaneous and alternative manual engagement;
(f) a cross pin fitting said arcuate slots and arcuately movable on movement of either of said cam disks to open a valve unit; and

(g) link means extending from said cross pin and operable to draw either or both of said cam disks to its valve unit closing position.

3,395,735
MOLDED CYLINDERS
Arthur J. Wiltshire and Edward C. Pavlovich, Cleveland, Ohio, assignors to Structural Fibers, Inc., Chardon, Ohio, a corporation of Ohio
Original application July 8, 1963, Ser. No. 293,381, now Patent No. 3,340,119, dated Sept. 17, 1967. Divided and this application Oct. 13, 1966, Ser. No. 604,497
1 Claim. (Cl. 138—141)

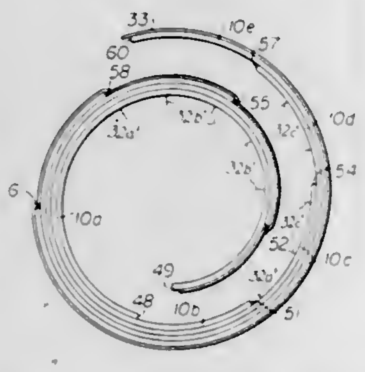

A molded, fiber-reinforced, resin-impregnated cylinder having a uniform wall thickness and precise circumferential tolerances. The cylinder consists of a plurality of concentric laminations of fibrous reinforcing sheets integrally bonded to each other and uniformly impregnated with a settable resin having a conductive materal dispersed within. Each concentric sheet has an edge-to-edge dimension equal to the circumference of that portion of the wall which forms. A longitudinally extending edge of each sheet is butted against its own opposite parallel edge, and each seam thereby formed is circumferentially spaced from each other seam in the laminated cylinder by a constant distance.

3,395,736
APPARATUS FOR PREVENTING WARP YARN BREAKAGE IN A LOOM
Rihei Nishikawa, Kariya, Japan, assignor to Toyoda Automatic Loom Works, Ltd., Kariya, Aichi Prefecture, Japan
Filed Sept. 16, 1966, Ser. No. 579,873
Claims priority, application Japan, June 22, 1966, 41/40,845
4 Claims. (Cl. 139—115)

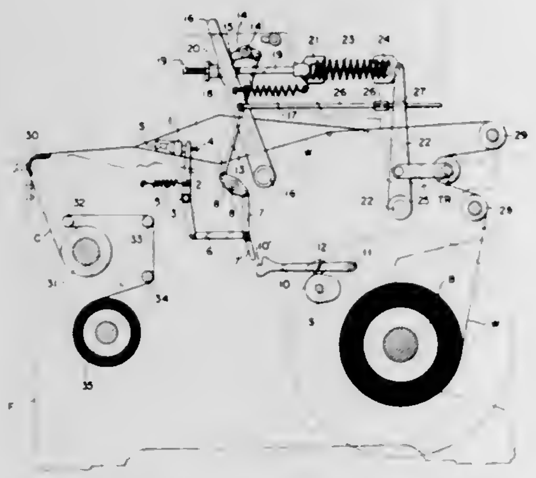

An apparatus for preventing warp breakage when the shuttle in a loom fails to enter the shuttle box. The apparatus has a shuttle detector which is engageable with a latch means when the shuttle detector fails to detect a shuttle in a shuttle box. The latch means releases a first support lever which is pivoted to an effective position by a spring, and through a connecting rod pivots a second support lever carrying the tension roller for the warp yarns so as to pivot the second support lever in a direction to decrease the tension on the warp yarns.

3,395,737
PNEUMATIC FILLING INSERTER
Karl W. Wueger, Spencer, Mass., assignor to Crompton & Knowles Corporation, Worcester, Mass., a corporation of Massachusetts
Filed June 7, 1966, Ser. No. 555,896
10 Claims. (Cl. 139—126)

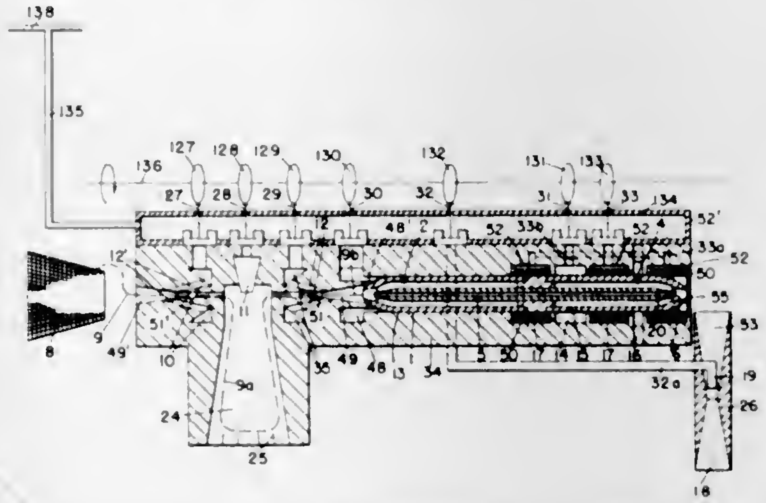

A pneumatic loom in which filling from outside supply package is alternately inserted from each side of the loom with the aid of a shuttle having a longitudinal bore and which is reciprocated between pneumatic launching and receiving devices on each side of the loom. A free end of the filling is blown through the bore of the shuttle before it is launched and filling is blown across the loom behind the shuttle after it is launched so that the end of the filling is guided across the loom by the shuttle.

ERRATUM

For Class 139—196 see:
Patent No. 3,395,865

3,395,738
STABLE FRINGE FABRIC AND METHOD OF MAKING SAME
Carl D. Rhodes, Leaksville, N.C., assignor to Fieldcrest Mills, Inc., Spray, N.C., a corporation of Delaware
Filed Aug. 15, 1966, Ser. No. 572,453
17 Claims. (Cl. 139—385)

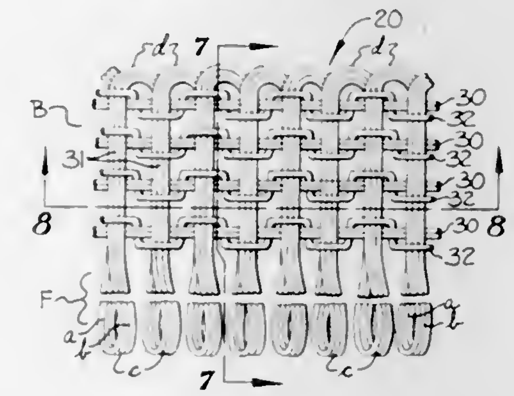

A fringe fabric woven to have shrinkability in the warpwise direction of no more than about 2% upon repeated launderings, and wherein the fabric has a leno weave body portion formed of a plurality of straight ground warps and undulating crossing wraps, with the filling yarns of the fabric positioned against a common side of the ground warps and bound thereto by the crossing warps, and wherein the filling yarns project outwardly from the body of the fabric to form the fringe.

3,395,739
CARBONATED BEVERAGE STABILIZER AND BOTTLE FILLING METHOD
Kenneth F. Friendship, Akron, Ohio, assignor to Geo. J. Meyer Manufacturing Co., Cudahy, Wis., a corporation of Wisconsin
Filed Sept. 30, 1965, Ser. No. 491,690
5 Claims. (Cl. 141—6)

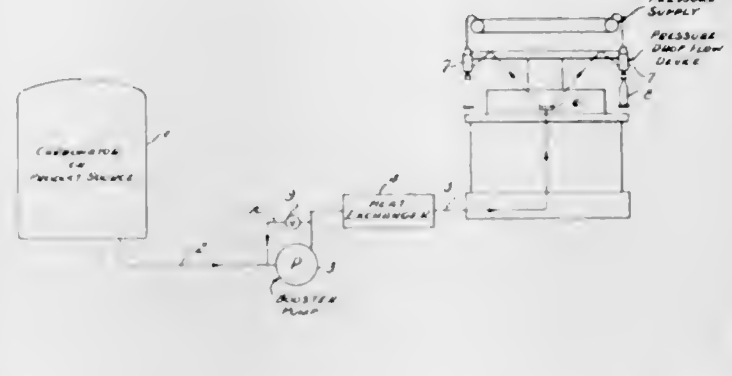

Stabilizing carbonated beverages and filling containers therewith where the carbonated beverage is initially produced under one pressure and then the pressure on the carbonated beverage is increased to a higher pressure to render it stable for movement. The carbonated beverage may then be processed under high pressure and ultimately the pressure is reduced to a lower pressure approximating its equilibrium pressure while cooling the beverage. The pressure on the beverage is further reduced to one below its equilibrium pressure immediately prior to container filling action and a residual pressure is maintained thereon which pressure is removed when the container is filled.

3,395,740
LIQUID DISPENSING NOZZLE SPOUT STRUCTURE
Hazel L. Sutcliffe and Eugene G. Sutcliffe, both of 122 E. Madison Ave., Kirkwood, Mo. 63122
Filed Oct. 22, 1965, Ser. No. 501,221
5 Claims. (Cl. 141—392)

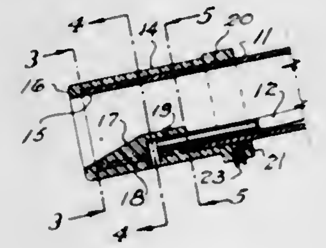

A dispensing nozzle structure for use in filling a gasoline tank, of the type present in motor vehicles, and involving an automatic cut-off valve which remains open during the flow of air through a passage having an inlet near the discharge end of the nozzle structure and running the length of the latter, which inlet opening is closed when the gasoline in the tank rises over it; the terminal portion at least of the nozzle structure provided with the inlet opening, in the present invention, being of nonmetallic material to protect the end of the nozzle structure from damage and to prevent marring or other injury to the vehicle finish.

The spout usually remains inserted in the tank opening while the attendant cleans the windshield, inspects liquid levels in oil reservoir, radiator and battery, tire pressures and performs other duties. If the spout is carelessly applied, the finish of the vehicle may be scratched, or if the nozzle is overbalanced and falls from the tank or if the vehicle moves before the nozzle is intentionally removed, the nozzle may be damaged by falling to the ground. After use, the nozzle is hung upon the pump standard and may scratch the finish or drop. These and similar conditions contribute to damaging finished surfaces or bending or other distortion of the spout. The nozzle spout may include a small inner tube for air leading to an automatic shut-off valve in the nozzle and the tube requires an air inlet through the wall of the spout near its outer discharge end. This air inlet and the adjacent end of the tube may be damaged by the incidents mentioned above, or otherwise.

3,395,741
WOOD SAWS
Frederick L. B. Miller, 17353 SW. Canal Circle, Lake Oswego, Oreg. 97034
Filed May 20, 1966, Ser. No. 551,645
11 Claims. (Cl. 143—133)

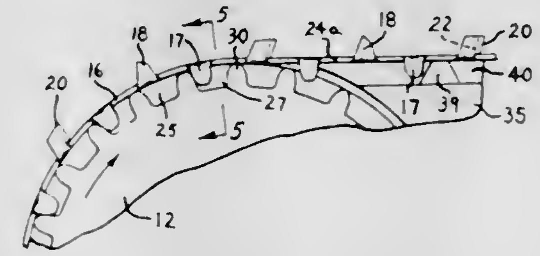

The saw has a succession of scoring teeth and chisel bit teeth, the latter having wing portions bent transversely from the leading edges of opposite side portions to cut a long fiber chip in cross cut sawing and eliminate sawdust. The teeth are formed on a stamped metal blank. The blank may comprise a long strip to form a band saw for use on a chain saw blade. The strip may be mounted on a wheel to form a circular saw. Also, two stamped circular blanks may be united to form a circular saw.

3,395,742
KNIFE STRUCTURE
Edgar R. Sanders, 708 Evans Ave., Valparaiso, Ind. 46383
Filed Apr. 27, 1965, Ser. No. 451,142
15 Claims. (Cl. 146—78)

The invention is primarily directed to an assembly comprising a planar elongated knife provided with a longitudinal cutting edge and a knife element provided with a plurality of spaced cutting edges which are disposed in contiguous relation to the longitudinal cutting edge for cutting a product into longitudinal sections.

3,395,743
LOCK WASHER
Robert H. Black, 1005 Madera Circle, Elm Grove, Wis. 53122
Filed Feb. 1, 1967, Ser. No. 613,320
3 Claims. (Cl. 151—30)

An annulus of thin resilient stock is provided about its external periphery with obliquely elevated tabs with inner corners located for successively engaging the flat surfaces of a nut. The inner periphery comprises initially elevated arcuate sectors alternating with guide flanges, the latter being twisted to ride across the bolt threads to guide the

washer during its application to a bolt. Under pressure of a nut, the elevated flanges are flattened and thereby clamp-

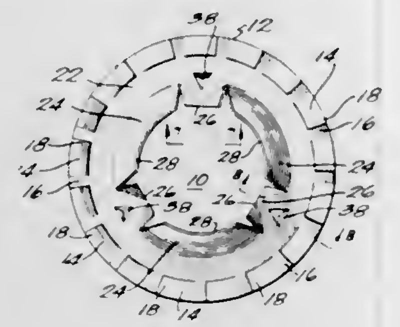

ingly engaged with the bolt, and prongs projecting downwardly from the washer engage the work.

3,395,744
REINFORCING FABRIC FOR TIRES
Burton Myer Wolf, Wadsworth, and Jerry Karl Reber and Robert Charles Purcell, Akron, Ohio, assignors to The Firestone Tire & Rubber Company, Akron, Ohio, a corporation of Ohio
Filed Feb. 4, 1966, Ser. No. 525,069
6 Claims. (Cl. 152—358)

This disclosure relates to a novel reinforcing fabric construction which contains warp cords and weft threads with the warp cords comprised of standard cord material, such as rayon, nylon and polyesters, and with the weft threads comprised of unoriented linear crystalline resinous material, such as nylon, having an elongation greater than 50% and which is particularly well suited for use as a reinforcing fabric in vulcanizable articles, specifically in pneumatic tires.

3,395,745
VEHICLE TIRE
Jean-Marie Massoubre, Clermont-Ferrand, France, assignor to Compagnie Generale des Etablissements Michelin, raison sociale Michelin & Cie, Clermont-Ferrand, Puy-de-Dome, France
Filed Nov. 30, 1965, Ser. No. 510,555
Claims priority, application France, Dec. 2, 1964, 997,174
7 Claims. (Cl. 152—361)

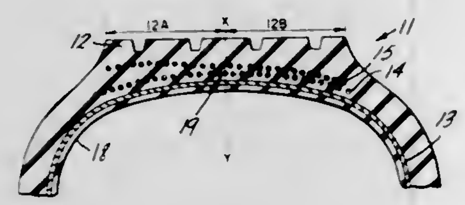

A pneumatic tire for vehicles having plies of cords of substantially uniform structure and dimensions between the carcass of the tire and the tread, the plies being substantially coextensive with the tread and one of said plies being positioned so that a portion of the ply on one side of the median plane of the tire is radially unsymmetrical with respect to the portion of the ply on the other side of the median plane to render the characteristics of the tire unsymmetrical and thereby improve its wear resistance and its roadability in sharp curves taken at high speed.

3,395,746
METHOD FOR DEVOLATILIZING LIQUID POLYMER COMPOSITIONS
Ted T. Szabo, Martinsville, and Felix P. Klosek, Neshanic Station, N.J., assignors to Union Carbide Corporation, a corporation of New York
Filed Dec. 13, 1965, Ser. No. 513,422
5 Claims. (Cl. 159—47)

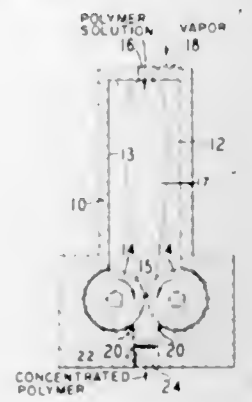

1. A method for separating volatiles from a liquid composition containing polymer and volatile constituents comprising introducing said composition to the upper portion of a chamber maintained at a reduced pressure to flash-vaporize said volatiles and foam the resulting composition thus releasing a substantial amount of volatiles therefrom and concurrently forming a foamy strand of polymer freely descending within said chamber substantially out of contact with the walls thereof, passing said descending strand through a substantially shear-free compression zone located in the lower part of the chamber, said compression zone being defined by a pair of counter rotating rollers having equal angular velocity and a nip clearance in excess of the necessary mechanical clearance thereof and less than the thickness of said strand; each of said surfaces at the zone of contact moving generally with the flow of the approaching strand to draw said strand into and through the nip of said rollers to mechanically compress said strand effecting the further release of volatiles therefrom and conveying the devolatilized polymer composition from said chamber.

3,395,747
CASTING METHOD
Earl A. Thompson, 1300 Hilton Road, Ferndale, Mich. 48220
Filed Sept. 4, 1962, Ser. No. 221,115
21 Claims. (Cl. 164—95)

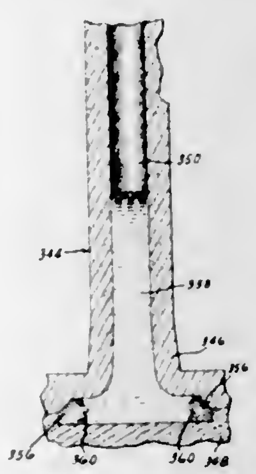

1. A method of casting a small composite article comprising providing a mold having a cavity defining the

shape of the article, maintaining plural sources of different molten metals at elevated temperatures, placing the mold at one of the sources of molten metal, metering a predetermined amount of one molten metal therefrom to flow by gravity into the mold cavity, applying a secondary force to overcome gravitational force and displace the molten metal to a desired zone in the mold cavity, cooling the displaced amount of molten metal to freeze only a surface skin thereon while placing the mold at another of the sources of molten metal, metering a predetermined amount of another molten metal therefrom to flow into the mold cavity into contact with the displaced amount of molten metal, remelting surface skin on the displaced amount of metal where it contacts the newly metered amount of metal, gradually cooling both amounts of metal together in the mold cavity and removing the secondary force to provide an autogenously united article having metallurgical characteristics of the one metal in one portion and metallurgical characteristics of the other metal in another portion.

3,395,748
METHOD AND APPARATUS FOR FABRICATING BATTERY CONNECTOR STRAPS
Ralph G. Tiegel, San Carlos, Calif., assignor to Tiegel Manufacturing Co., Belmont, Calif., a corporation of California
Filed June 4, 1964, Ser. No. 372,524
10 Claims. (Cl. 164—103)

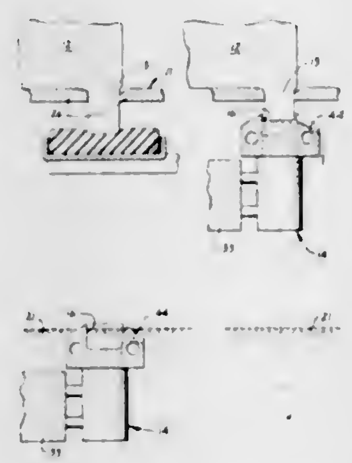

1. The method of casting battery post straps onto the connector lugs of groups of battery plates, comprising the steps of filling an open top battery post strap mold with molten lead while heating the mold to a temperature of the order of the molten lead therein, immersing appropriate connector lugs of a group of battery plates in the molten lead in said mold, maintaining said mold at a temperature high enough to keep the lead molten before and during immersion for a period sufficient to insure a good weld of the connector lugs to the battery post strap, and contacting said mold with a stream of fluid of comparatively low temperature a precisely timed interval after said immersion so as to chill said mold and the lead contained therein rapidly to halt melting of said connector lugs at the end of said period.

6. An apparatus for casting battery post straps onto battery plates, comprising means for releasably supporting a group of battery plates with their connector lugs projecting downwardly in aligned relation, a mold member of relatively heat conductive material having walls defining an open top mold cavity for a battery post strap and formed with a coolant passage in said walls at the upper portion thereof, a reservoir adapted to contain a pool of molten lead, means formed for dipping said mold into said pool of molten lead and for lifting said cavity into surrounding relation to the bottom ends of said connector lugs whereby the latter will be immersed in molten lead contained in said cavity, heat exchanger means adapted for supplying a stream of coolant through said passage for rapidly chilling said mold and solidifying the molten lead, and control means for activating said heat exchange means a precisely timed period after said connector lugs are immersed in the molten lead in the mold cavity so as to solidify the battery post strap at the instant a good weld is obtained and before material erosion of the connector lugs.

9. In a machine for casting battery post straps onto battery plate connector lugs by dipping a mold having an open top mold cavity into a pool of molten lead and lifting the mold to immerse the connecting lugs in the molten lead contained in the mold cavity, a mold structure comprising a mold member having walls defining an open top mold cavity, said walls being fabricated of relatively heat conductive material and formed for rapid heating and cooling, said mold member being adapted to acquire sufficient heat from said pool of molten lead to maintain the lead carried by said mold member in a molten state when said connecting lugs are immersed therein, said mold member being formed with a coolant passage through said walls, and means for selectively admitting a stream of liquid coolant and a blast of air to said coolant passage.

3,395,749
METHOD OF CASTING REENTRANT ANGLES
George Blair, Tyvonnay, Witton-le-Wear, Bishop Auckland, Durham, England
Filed Jan. 24, 1966, Ser. No. 522,558
8 Claims. (Cl. 164—122)

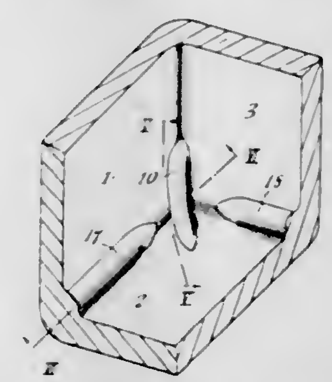

1. A method of producing a metal casting having at least one reentrant angle, wherein a projecting rib is cast in said angle to provide increased local surface area for dissipation of heat from the metal and progressive solidification without surface shrinkage.

3,395,750
APPARATUS FOR DISPLACING SCUM IN CONTINUOUS CASTING MOLDS
Robert J. Keene, Chicago Heights, Ill., assignor to United States Steel Corporation, a corporation of Delaware
Filed Sept. 1, 1965, Ser. No. 484,407
1 Claim. (Cl. 164—259)

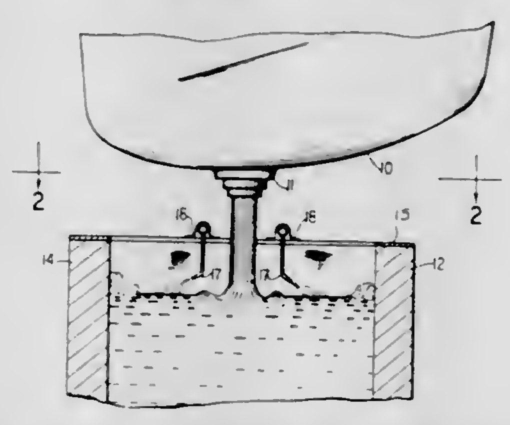

Transverse manifolds are disposed above a rectangular-section continuous-casting mold, adjacent the median

transverse plane, and are provided with nozzles extending down into the mold cavity directed to discharge gas jets sweeping the surface of the molten metal and causing floating slag to accumulate adjacent the end walls. A guide plate having target marks for the jets is temporarily inserted in the mold before pouring to facilitate directional adjustment of the nozzles.

3,395,751
MEANS FOR MOVING THE CHILL-MOULD IN CONTINUOUS CASTING PLANT
Walter Hess, Dusseldorf, Germany, assignor to Schloemann Aktiengesellschaft, Dusseldorf, Germany, a corporation of Germany
Filed Dec. 1, 1965, Ser. No. 510,761
Claims priority, application Germany, Dec. 3, 1964, Sch 36,204
2 Claims. (Cl. 164—260)

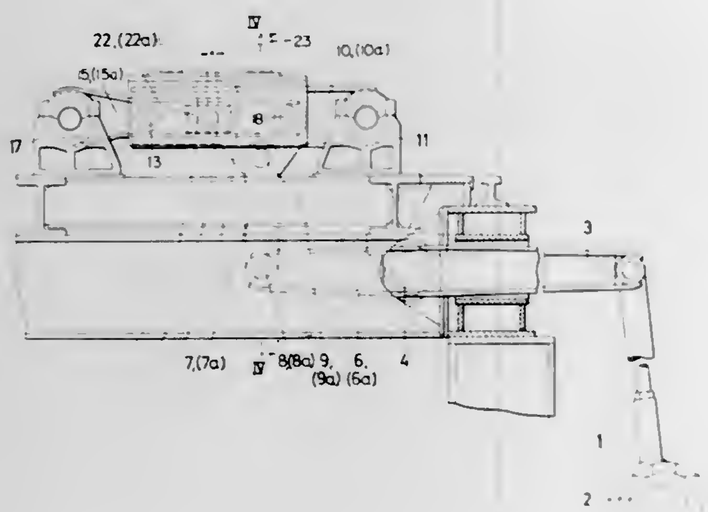

Means for moving the chill-mould or chill-mould table of continuous casting plant, comprising two pairs of levers, which are rockable about two stationary pivots preferably extending parallel to one another in a plane, the levers of the two pairs being directed towards one another and pivotally connected with one another, and being pivotally connected at their free ends with the chill-mould or its table, and the pivotal connection of the levers with one another being unequally distant from the pivots constituting the fulcra of the levers.

3,395,752
BASEBOARD HEAT EXCHANGER APPARATUS
Andrew J. Fowell, South Bound Brook, N.J., assignor to American Standard Inc., a corporation of Delaware
Filed June 10, 1966, Ser. No. 556,678
4 Claims. (Cl. 165—55)

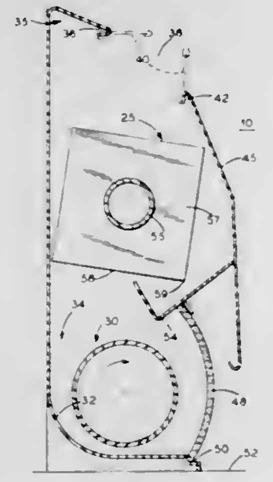

This invention relates to a forced air baseboard heat exchanger unit. The unit includes a crossflow fan, a housing having a scroll adjacent to the fan, and a heat exchanger mounted above the fan and within the housing. The fan is made of a hollow cylindrical member formed of expanded sheet metal and is retained between flat end plates to which shaft means are connected so that the member may be rotated. The fan is positioned near the bottom of the housing which has an opening extending substantially across the length of the housing and over the entire axial extent of the rotor. The heat exchanger extends along at least a portion of the length of the housing.

3,395,753
FINNED HEATING UNIT WITH SIDE GUIDE RAILS
Adolph Falso, Fayetteville, N.Y., assignor to Thor Metal Products Co., Inc., Syracuse, N.Y., a corporation of New York
Filed Mar. 17, 1967, Ser. No. 623,901
5 Claims. (Cl. 165—55)

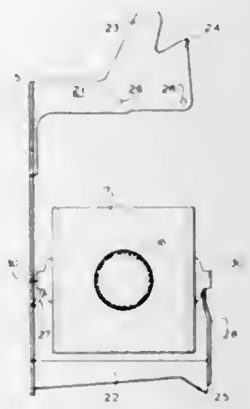

A baseboard heating unit having a back plate and a front plate. Brackets secured to the back plate removably support the front plate spaced from the back and have arms extending under a finned heating coil. Upwardly projecting tongues on the brackets at either end of the arms have ends adjacent front and back plates for supporting elongated shouldered guide rails extending longitudinally of the tube and secured to the front and back ends of the fins intermediate the tops and bottoms thereof.

3,395,754
HEAT TRANSFER DEVICES AND METHOD OF MANUFACTURE
Philip D. French, 77 Melody Lane, East Granby, Conn. 06026
Filed Aug. 22, 1966, Ser. No. 574,004
17 Claims. (Cl. 165—185)

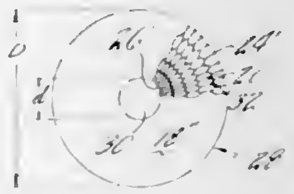

Heat transfer devices and methods of fabricating such devices from honeycomb stock material. The devices are flexible and have an apertured core region, the formed honeycomb material exerting a spring force toward the core region. The shape of the core aperture may be altered to enable installation of the devices on various sized and shaped objects.

3,395,755
BOTTOM ACCESS CAISSON
William F. Manning, Springdale, Conn., assignor to Mobil Oil Corporation, a corporation of New York
Filed Mar. 30, 1966, Ser. No. 538,627
10 Claims. (Cl. 166—.5)

1. An access caisson for providing atmospheric conditions in an area surrounding a submerged wellhead,

said access caisson comprising at least one cylindrical caisson section having a cylindrical hollow interior extending the length thereof; means for sealing the lower end of said access caisson to a landing base of a submerged wellhead; means for selectively closing off the lower portion of said cylindrical hollow interior above a wellhead extending thereinto to define a working cham-

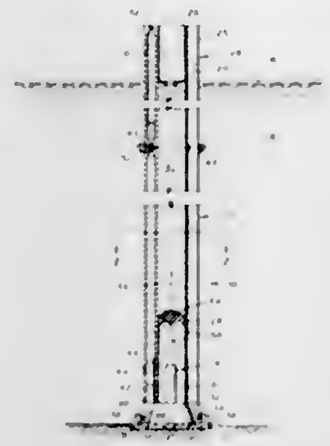

ber; at least one watertight access tube connecting said working chamber of said access caisson with the upper end of said access caisson when said working chamber is selectively closed off; and means for evacuating water from said working chamber and said access tube when said access caisson is mounted on and sealed to a wellhead landing base set beneath the surface of a body of water.

3,395,756
PROCESS FOR THE EXPLOITATION OF BITUMENS-CONTAINING STRATA BY UNDERGROUND PREPARATION AND GASIFICATION
Hans Lange, Wietze Kreis Celle, Germany, and Gunther Schlicht, deceased, late of Hamburg, Germany, by Erika Marie Elisabeth Schlicht, legal representative, Hamburg-Othmarschen, Germany, assignors to Deutsche Erdol-Aktiengesellschaft, Hamburg, Germany
No Drawing. Continuation-in-part of application Ser. No. 242,868, Dec. 3, 1962. This application Oct. 23, 1965, Ser. No. 505,141
7 Claims. (Cl. 166—36)

1. A process for preparing for extraction underground solid bituminous deposits in the plastic temperature range of the solid bitumens comprising:

(a) heating above ground a heat transfer medium comprising a mixture of non-condensible gases and condensible hydrocarbons;
(b) introducing through treatment boreholes said heat transfer medium into said bituminous deposits at a pressure above the breaking pressure of said solid bitumens and at a temperature below the softening temperature of said solid bitumens;
(c) introducing cool liquid light hydrocarbons into said treatment boreholes whereby the area around said boreholes is cooled;
(d) introducing into said bituminous deposits a member selected from the group consisting of oxygen-releasing compositions and explosives, said member dissolved in volatile solvents and evaporating said solvents by subsequently introducing a hot fluid medium whereby said member is precipitated in a solid activated form; and
(e) introducing a mixture of air and hydrocarbon vapors into said treatment boreholes at a pressure above the breaking pressure of said solid bitumens and igniting said mixture and said precipitated solid activated form whereby the porosity of said bituminous deposits is maintained through said plastic temperature range.

3,395,757
METHOD AND COMPOSITION FOR REMOVING AND INHIBITING PARAFFIN DEPOSITION
Albert R. Crossland, Seminole, Tex., assignor to Electro-Chem Corporation, Fort Worth, Tex., a corporation of Texas
No Drawing. Filed Jan. 16, 1964, Ser. No. 338,005
20 Claims. (Cl. 166—41)

1. A method for inhibiting the deposition and accumulation of wax-like substances contained in crude petroleum upon the surfaces in contact with the said crude petroleum which comprises introducing into the said crude petroleum in contact with the said surfaces an inhibiting amount of a treating composition consisting essentially of a dialkylene glycol monoloweralkylether, containing from 2 to 5 carbon atoms in the alkylene group, an alkylene glycol monoloweralkylether containing from 2 to 5 carbon atoms in the alkylene group, and a polyoxyalkylene alkylphenolether wherein the alkylene group contains from 2 to 5 carbon atoms, the alkyl group contains from 5 to 12 carbon atoms, and containing from 2 to 10 moles of alkylene oxide per mole of alkylphenol, in a weight ratio of from about 1:1:1 to about 1:3:2, respectively.

3,395,758
LATERAL FLOW DUCT AND FLOW CONTROL DEVICE FOR WELLS
Warner M. Kelly, Houston, and James E. Reagan, Dallas, Tex., assignors to Otis Engineering Corporation, Dallas, Tex., a corporation of Delaware
Filed May 27, 1964, Ser. No. 370,625
10 Claims. (Cl. 166—100)

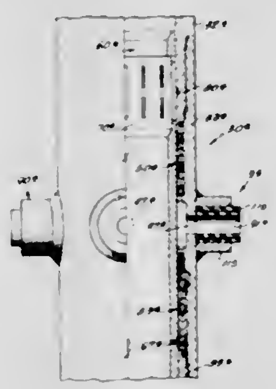

1. A flow control device including: a nipple having a longitudinal passage and a lateral port communicating the exterior of the nipple with the longitudinal passage intermediate its ends; fully extended duct means on said nipple extending laterally outwardly beyond the outer periphery of said nipple and providing a lateral passage communicating at its inner end with said lateral port, the outer end of said lateral passage being spaced radially outwardly beyond the outer periphery of said nipple; and valve means carried by said nipple and operable by means movable in said longitudinal passage for selectively opening and closing said lateral port.

3,395,759
WELL TOOL PUMPABLE THROUGH A FLOWLINE
William A. Talley, Jr., Dallas, Tex., assignor to Mobil Oil Corporation, a corporation of New York
Filed Sept. 9, 1966, Ser. No. 578,247
10 Claims. (Cl. 166—155)

1. A tool adapted to be reciprocatively pumped through a flowline under pressure comprising: a piston section for slidably sealing said tool in a flowline to permit said tool to be pumped through a flowline by fluid pressure applied at either end of said tool; a longitudinal bypass passage fully within said tool for bypassing said

piston section; first valve means associated with said bypass passage for permitting a fluid flow through said bypass passage of said tool in a first direction, said first valve means including means for the automatic closing thereof against fluid flow through said bypass passage of said tool in a second direction; and second calibrated valve means associated with said bypass passage, in series with said first valve means, for permitting fluid flow of at least a minimum predetermined pressure through said bypass passage of said tool, in said first direction, said second valve means including means for the automatic closing thereof against fluid flow through said bypass passage of said tool in said second direction; said second

valve means being openable by fluid, of above said minimum predetermined pressure, having passed through said first valve means whereby fluid is permitted to flow through said tool as said tool moves through a flowline in a first direction if pressure builds up above a predetermined minimum pressure in a flowline between a source of fluid under pressure and said tool as said tool is pumped through a flowline in said first direction, while permitting no fluid to bypass said tool while said tool moves through a flowline in said second direction; said first valve means preventing fluid from bypassing said tool when said tool is returning through a flowline regardless of whether said second valve means is open.

3,395,760
AERODYNAMICALLY FEATHERED HELICOPTER ROTOR
John A. Hoffman, 7350 Atoll Ave., Unit 21, North Hollywood, Calif. 91605
Filed Aug. 18, 1967, Ser. No. 661,676
4 Claims. (Cl. 170—135.4)

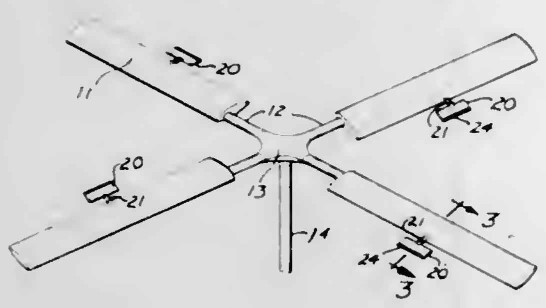

A rotor blade for a helicopter, the blade having a flexible shaft and aerodynamic means for its control. The control means includes a jet tab system attached to the rotor blade in a position to feather the blade and thus provide control for cyclic pitch change and controlled pitch change of the blade without complex mechanical linkages.

3,395,761
FAN
Walter Holzer, Drosteweg 19, Meersburg (Bodensee), Germany
Filed June 20, 1966, Ser. No. 558,924
Claims priority, application Germany, June 24, 1965, H 56,398
10 Claims. (Cl. 170—160.5)

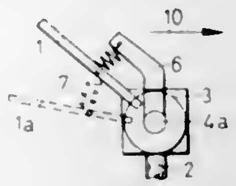

A fan for moving adjustable quantities of air comprising a drive of variable speed and fan blades, in which the fan blades have fins, the angle of attack of which is variable by the air flow. The fins are either resilient or are rotatably mounted on rigid components connected to the drive. Springs or magnetic means are provided to oppose the effect of the air flow. The fin may also be detachably connected to the drive.

3,395,762
PITCH CONTROLLING APPARATUS OF A PROPELLER OF SHIPS
Toshio Itazawa, Yokohama-shi, Japan (% Saito Patent Office, 7 Nichome, Nihonbashi-dori, Chuo-ku, Tokyo, Japan)
Filed June 19, 1967, Ser. No. 646,902
Claims priority, application Japan, Sept. 7, 1966, 41/58,713
4 Claims. (Cl. 170—160.32)

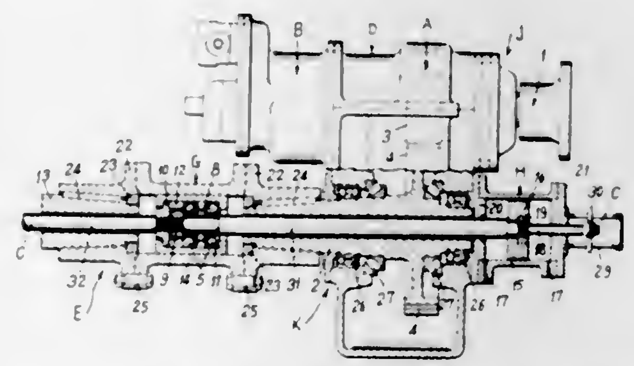

In a controllable pitch marine propeller mechanism in which the propeller is connected to the after end of a hollow shaft, a double acting hydraulic cylinder mechanism is nonrotatably fixed forwardly of the front end of the propeller shaft and coaxially therewith. An axially slideable rod extends through the propeller shaft to connect the piston of the hydraulic cylinder with pitch changing mechanism in the propeller hub. The rod comprises two axially aligned members. The forward rod member is connected with the piston and confined to sliding motion therewith. A rotatable connection between the rod members constrains the after rod member to slide fore-and-aft with the forward rod member but leaves it free to rotate with the propeller shaft.

3,395,763
HYDRAULIC CONTROL SYSTEM FOR VARIABLE PITCH PROPELLER
Samuel Avena, Newark, and Robert L. Leiner, Butler, N.J., assignors to Curtiss-Wright Corporation, a corporation of Delaware
Filed Sept. 22, 1965, Ser. No. 489,144
15 Claims. (Cl. 170—160.32)

1. A hydraulic circuit comprising a sump to contain a supply of fluid, a pair of pumps, means connecting said sump with each of the pumps for supplying fluid thereto, a pair of cylinders each having a piston as a movable

end wall to provide an output signal, fluid carrying means between the pumps and cylinders connecting each pump with both cylinders for supplying pressurized fluid there-

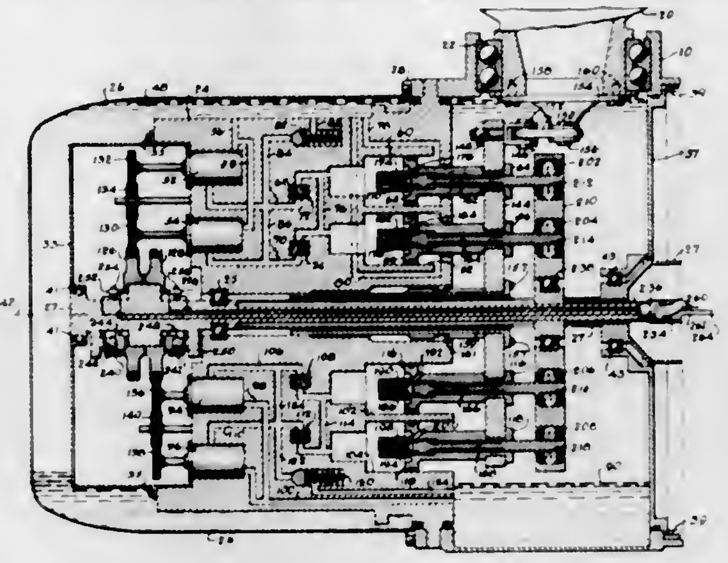

to, and fluid transfer means between each cylinder and the sump, each such fluid transfer means between a cylinder and the sump including a valve for controlling pressure in the cylinder.

3,395,764
DIAGONAL BRACING AND BULLDOZER BLADE MOUNTING
Leon A. Wirt, Joliet, Ill., assignor to Caterpillar Tractor Co., Peoria, Ill., a corporation of California
Filed Aug. 2, 1965, Ser. No. 476,339
3 Claims. (Cl. 172—803)

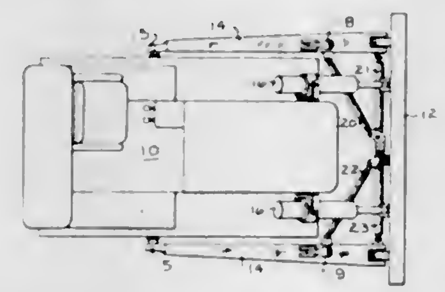

Bracing for bulldozers and particularly to means for bracing bulldozer blades to prevent damage resulting from stresses which are set up when the blade is adjusted to its tilt position and also to distribute stresses which result upon side loading of the blade.

Reference is made to the Liess Patent 3,025,620, the Lichti Patent 3,049,820 and the Lichti Patent 3,049,821, all of which deal with the problem of diagonal bracing and tilting the blades and with the proper distribution of stresses in the push arms of the tilting blade when it is tilted. The latter of the Lichti patents illustrates diagonal bracing designed particularly for very large blades but since the diagonal braces are formed as integral parts of the blades, they are unwieldly to assemble and handle and lack desirable adjustment to enable centering of the blade upon assembly and to make up for manufacturing tolerances and wear during use.

3,395,765
SMALL ROTARY HAMMER
Jerome L. Schnettler, Milwaukee, Wis., assignor to Milwaukee Electric Tool Corporation, Brookfield, Wis., a corporation of Wisconsin
Filed Dec. 19, 1966, Ser. No. 602,646
6 Claims. (Cl. 173—13)

1. A hammer drill comprising:
a driven spindle;
a rotatable drive chuck mounted for limited axial movement, said chuck having first clutch teeth;
means interconnecting said spindle and said chuck;
a cam rotatable with respect to said chuck, means for supporting said cam and preventing axial displacement thereof, said cam having second clutch teeth engageable by said first clutch teeth upon axial movement of said drive chuck, said cam having a first cam surface; and

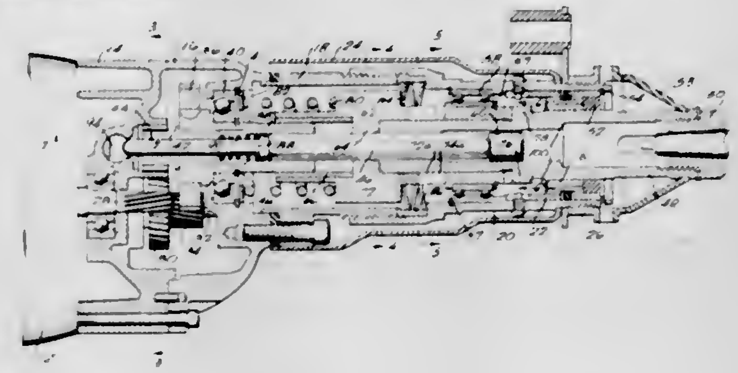

a ram associated with said spindle and drive chuck, means biasing said ram toward said drive chuck to effect a direct blow to said chuck, means restraining said ram from rotation and permitting axial movement thereof, said ram having a second cam surface engageable by said first cam surface to move said ram against said biasing means upon rotation of said cam by said drive chuck.

3,395,766
POSTHOLE DIGGER
Edward Granville, Yermo, Calif., assignor to United States Steel Corporation, a corporation of Delaware
Filed Mar. 9, 1965, Ser. No. 438,283
5 Claims. (Cl. 173—23)

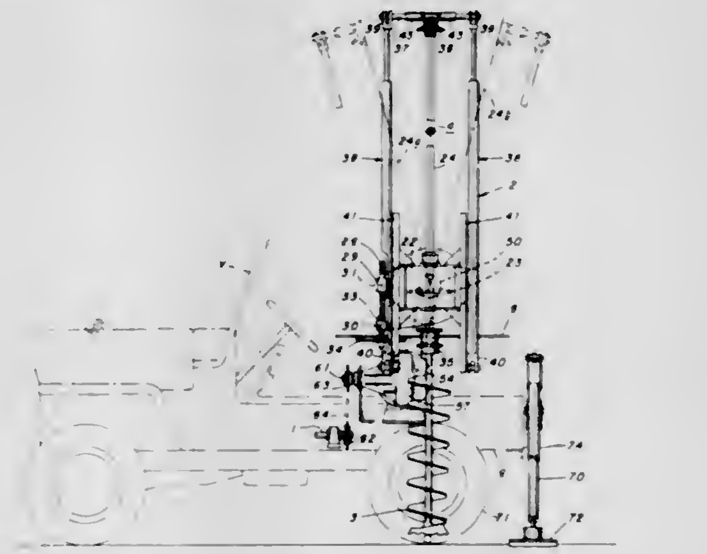

A posthole digger or other auxiliary appartus for intermittent operation by a continuously rotating power take-off shaft of a tractor or automotive vehicle. A posthole digger in the form of an earth auger having a swivel mounting on the end of a carriage mounted for sidewise movement on a conventional tractor or automotive vehicle to provide for its being centered by the operator of the vehicle in a vertical position over a hole to be dug thereby.

3,395,767
MERCURY CHATTER HAMMER
John E. Bardwell, 320 Providence Road, Ballwin, Mo. 63011
Filed Oct. 23, 1965, Ser. No. 503,339
4 Claims. (Cl. 175—293)

A gravity drop churn drill including a chatter hammer or a standard drill bar in which is provided a longitudinal closed well having a predetermined amount of mer-

cury or similar fluids therein which is effective to add an almost simultaneous third blow with a chatter hammer

and second blow with a standard drill bar in use of the drill.

3,395,768
WEIGHING GAMBREL
Robert S. Benbow, Rte. 2, Box 2392, Oroville, Calif. 95965
Filed Apr. 8, 1966, Ser. No. 541,161
4 Claims. (Cl. 177—225)

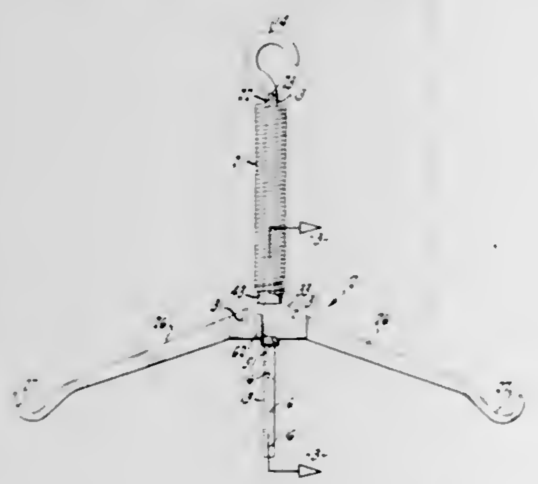

A stem with weight indicia is vertically suspended from a support member. Vertically movable relative to the stem is a bracket carrying a pair of oppositely extending gambrel arms formed with terminal hooks to engage the legs of a dead animal to be supported and weighed. A tension spring connects the fixed stem and the movable arms, the weight indicia being a function of the spring constant so as to indicate the weight of the animal supported on the gambrel arms. Structure is also provided to immobilize the bracket and attendant arms at a predetermined location.

3,395,769
VEHICLE SUSPENSION DEVICES
Maurice Francois Alexandre Julien, Paris, France, assignor to Paulstra, Levallois-Perret, France, a society of France
Filed Jan. 24, 1966, Ser. No. 522,453
Claims priority, application France, Feb. 2, 1965, 4,151
5 Claims. (Cl. 180—64)

A suspension device interposed between the main frame and the half-suspended structure of a vehicle. A spring and a hydraulic shock absorber are placed in parallel with each other between said frame and said structure, the shock absorber being connected between the said structure

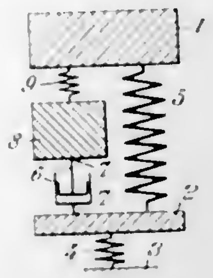

and a heavy mass such as an engine, a transmission, or the like, and the heavy mass in turn being connected to the main frame through a resilient support.

3,395,770
COOLING MEANS FOR VEHICLE ELECTRIC DRIVE COMPONENTS
John H. Babbitt, Jr., Peoria, Ill., assignor to Caterpillar Tractor Co., Peoria, Ill., a corporation of California
Filed Oct. 3, 1966, Ser. No. 583,853
1 Claim. (Cl. 180—65)

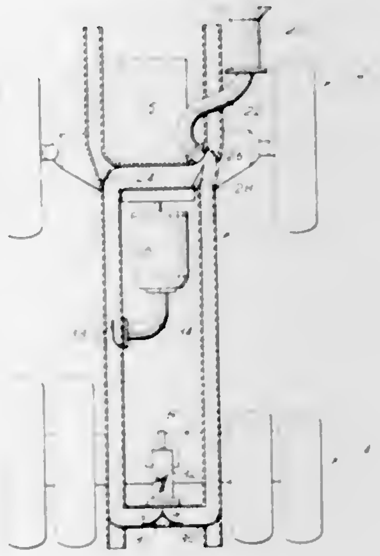

Means to cool the generator and motors in an electric drive vehicle and particularly means for directing large quantities of ambient air into contact with such components to reduced the heat which results from their operation.

3,395,771
TRACTOR GUIDANCE SYSTEM
Donald W. Moyer, Downers Grove, and William C. Swanson and John S. Lam, Clarendon Hills, Ill., assignors to International Harvester Company, Chicago, Ill., a corporation of Delaware
Filed May 21, 1965, Ser. No. 457,777
15 Claims. (Cl. 180—79.2)

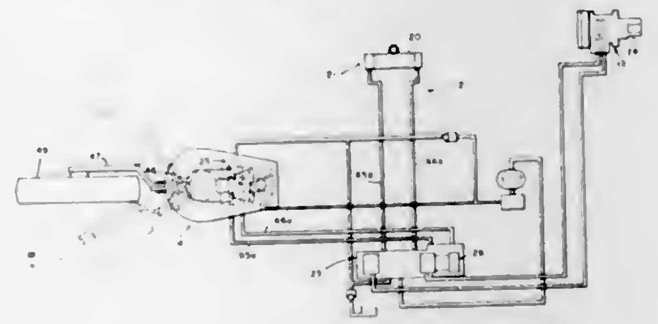

1. A guidance system for automatically controlling hydrostatic power steering apparatus of a tractor having a reciprocating hydraulic motor therein and having at least one front wheel rotative about a horizontal axle, said axle being pivotal about a vertical axis responsive to the operation of the reciprocating hydraulic motor of said apparatus, said apparatus including hydraulic circuitry and a valve in said circuitry having a spool operatively connected with the piston of a fluid pressure motor for controlling the operation of the reciprocating hydraulic motor of said apparatus, said system comprising a hydro-mechanical unit carried by said tractor for pivotal movement with said axle about said axis, said unit including

(a) a housing disposed forwardly of said tractor,
(b) a depending shaft supported by said housing for relative rotation about a vertical axis,
(c) a guide caster supported by said shaft in predetermined spaced relation with said shaft and said wheel, said caster being rotative about one horizontal axis and pivotal about another horizontal axis in predetermined spaced relation with said one horizontal axis, said caster also being pivotal about said vertical axis of said shaft,
(d) a cam mounted on said shaft for rotation therewith,
(e) an actuator valve for controlling actuation of said piston and including a spool spring-biased in neutral position,
(f) said actuator valve having pressure fluid inlet and outlet ports in operative communication with corresponding ports of said fluid pressure motor,
(g) linkage mechanism operatively interconnecting said cam and said actuator valve spool whereby upon predetermined movement of said cam in one direction, and another, said actuator valve spool moves correspondingly to open and close the ports of said actuator valve, respectively, and thus to operate the same and to actuate said fluid pressure motor thereby to actuate said first valve and cause the reciprocating hydraulic motor of said steering apparatus to be operated correspondingly,
(h) said caster being arranged to travel in a ground marker groove indicating a selected path of travel for said tractor, and said cam being pivotally responsive to changes in direction of travel of said caster.

3,395,772
FLEXIBLE SKIRTS FOR AIR CUSHION BORNE VEHICLES
Frank Phillip George Francis and Gordon Victor Watts, Wiltshire, England, assignors, by mesne assignments, to British Hovercraft Corporation Limited, Yeovil, England
Filed Sept. 14, 1965, Ser. No. 487,268
Claims priority, application Great Britain, Sept. 17, 1964, 38,090/64
12 Claims. (Cl. 180—127)

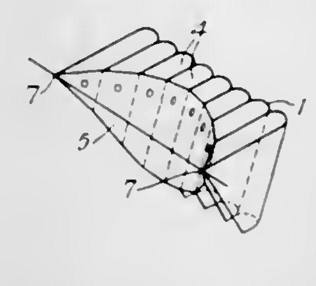

The invention concerns flexible skirts for air cushion borne or ground effect vehicles including several skirt units all of which have substantially vertically corrugated outer skin with the peaks projecting inwards into the air cushion space and the flexible sheet material between the peaks bulging outwardly under the influence of the air cushion pressure. The outer skin is prevented from splaying outwardly by webs each lying in a substantially vertical plane perpendicular to the general direction of the skirt and attached at one edge to the peaks of the corrugations. The opposite edges of these webs, which are parallel, are attached to a tension member, which lies within the air cushion space and extends generally in the direction along the skirt unit. This tension member is concave inwardly with respect to the vehicle body, i.e., its ends, which are attached to the vehicle body, are farther from the outer skin than its middle portion. The tension member is similar in principle to that of the cables of a suspension bridge and the webs act in a similar manner to the vertical ties of the bridge which extend at intervals down from the cable to support the roadway.

3,395,773
SURFACE EFFECT MACHINE WITH PRESSURE FLUID CUSHION SYSTEM
Louis Duthion, Paris, and Jean Henri Bertin, Neuilly-sur-Seine, France, assignors to Bertin & Cie, Paris, France, a French company
Filed Apr. 12, 1966, Ser. No. 541,990
Claims priority, application France, Apr. 14, 1965, 13,234
5 Claims. (Cl. 180—127)

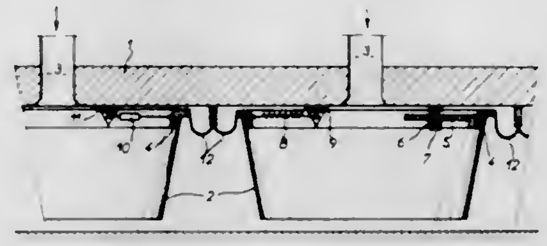

A ground effect machine having a skirt depending from a platform and confining a pressure fluid cushion formed against a bearing surface, said skirt being mounted for movement relative to said platform, in the plane of motion thereof, from a mean relative position against a resilient return force, means being provided for damping said movement.

3,395,774
REVERBERATION CHAMBER WITH PARTLY FLEXIBLE MOVABLE WALLS
Kurt Seifert, Destouchesstrasse 36, Munich 8, Germany
Filed Sept. 16, 1966, Ser. No. 580,112
Claims priority, application Germany, Sept. 20, 1965, S 99,512
10 Claims. (Cl. 181—.5)

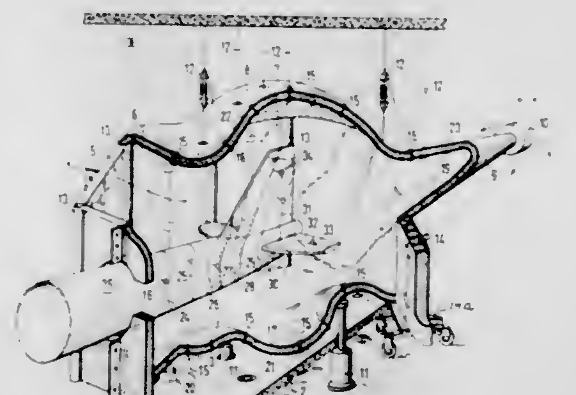

A reverberation chamber for testing or generating sound fields is equipped with walls which are partly flexible and with mechanisms for shifting the flexible wall portions inward and outward until a desired sound distribution is indicated by measuring instruments. The chamber permits a more realistic simulation of actual sound fields

in a simpler manner than has been possible heretofore. Various specific wall constructions and moving mechanisms are disclosed.

3,395,775
VIBRATION DAMPING COMPOSITE
William Desby Smith, San Diego, Calif., assignor to Solar, a Division of International Harvester Co., San Diego, Calif., a corporation of New Jersey
Filed Nov. 12, 1965, Ser. No. 507,310
10 Claims. (Cl. 181—33)

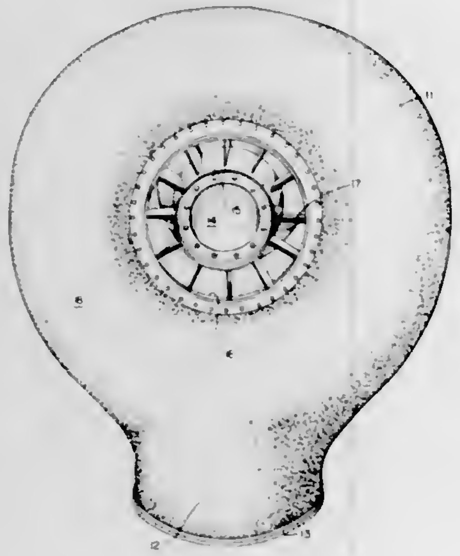

1. A composition adapted to be cured to a heat insulating and vibration damping substance, said composition comprising a generally homogeneous mixture consisting essentially of on the order of one and one-half parts by weight of a viscoelastic organosyloxane resin, on the order of one and one-half parts by weight of an aromatic hydrocarbon in which said resin is soluble, on the order of one part by weight of a fibrous, inorganic filler, and on the order of one five-hundredth part by weight of an organic blowing agent.

3,395,776
SELF-LOCKING SAFETY SUPPORT FOR LADDERS
Hilary F. Russell, 417 S. Main St., Manchester, Conn. 06040
Filed Mar. 13, 1967, Ser. No. 622,714
7 Claims. (Cl. 182—108)

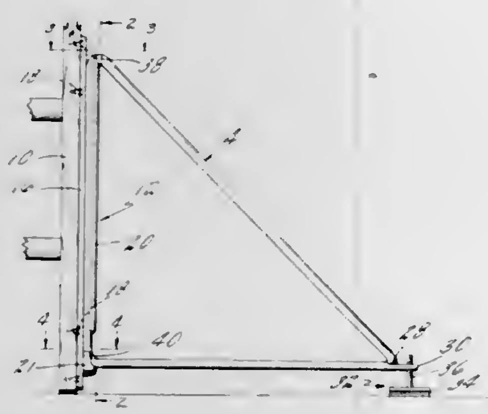

A safety support for ladders comprising a bracket which is mounted on the side rail of the ladder and a removable support member which engages the bracket and locks into position. The support member is preferably of substantially triangular shape and, adjacent an apex of the triangle, is equipped with an adjustable ground or floor engaging foot.

3,395,777
AUTOMOBILE LIFT
John Rodosta, 2035 Poydras St., New Orleans, La. 70112
Filed Apr. 28, 1967, Ser. No. 634,683
6 Claims. (Cl. 187—8.59)

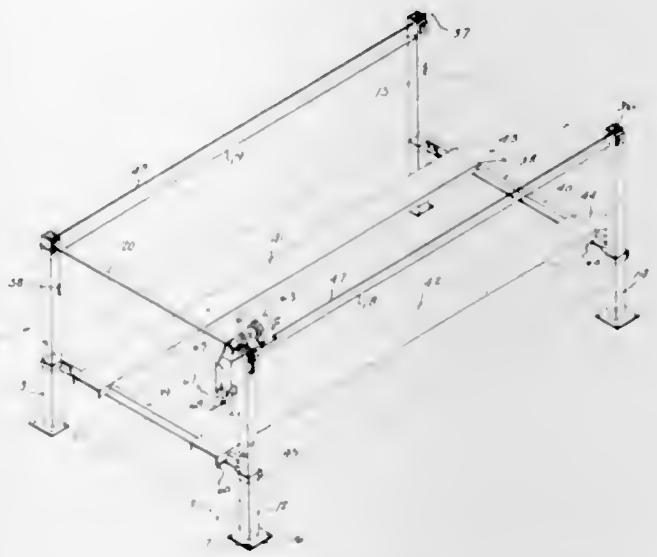

A power-operated automobile lift consisting of four hollow fixed vertical corner posts with a vehicle-supporting frame slidably-connected to the posts. The posts at one end of the lift contain hydraulic cylindrers with downwardly-extensible piston rods. Aa pair of pulleys is journaled to each piston rod. Respective pairs of cables are connected to the upper portions of the cylinders and extend around said pulley, passing over additional pulleys journaled in the posts above each cylinder. One of each pair of cables extends downwardly and is connected directly to the vehicle-supporting frame. The other of the pair extends longitudinally to the corresponding post at the opposite end of the lift. The cables extend over pulleys journaled in the top ends of said last-named posts and downwardly therefrom, being connected to the vehicle-supporting frame, so that the downward extension of the piston rod simultaneously produces upward lifting force on the frame adjacent each post. The cylinders are actuated by an electric motor-driven hydraulic pump mounted on one of the posts.

3,395,778
BRAKE FOR PERAMBULATOR
John Shelby, 1333 Hollywood, Chicago, Ill., 60626
Filed Mar. 7, 1967, Ser. No. 621,173
6 Claims. (Cl. 188—20)

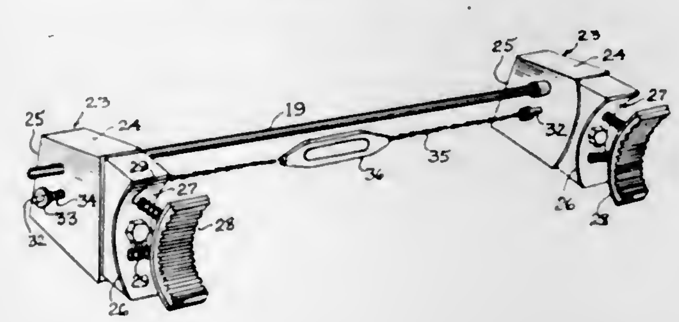

A braking device readily installed upon a new or existing manually moved vehicle having supporting brackets for which shaft is mounted a braking assembly. The shaft carries blocking brakes which in turn yieldably support brake pads in close proximity to the periphery of the wheels of the vehicle with the brake blocks and pads movable into braking position by manual movement of the supporting shaft in a direction transverse to its longitudinal length. The brake blocks provide locking pins which cooperate with the mounting supports for releasably locking the brake assembly in braking relation to the wheel of the vehicle.

3,395,779
WHEEL STOPPING DEVICE
James Madison Foster, Jr., Memphis, Tenn., assignor to R. Lee Fraser, doing business as Diversified Engineering Co., Memphis, Tenn.
Filed Aug. 29, 1966, Ser. No. 575,715
6 Claims. (Cl. 188—32)

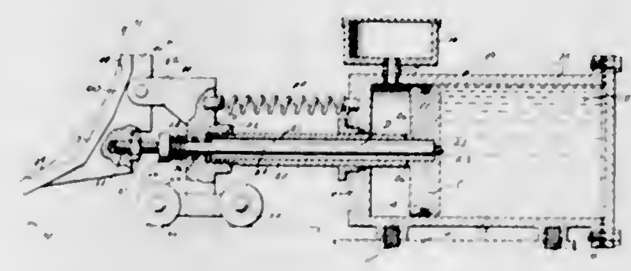

A stopping device that automatically balances weight and forward horizontal forces of a rolling object for stopping the object in a minimum travel distance with minimum shock.

3,395,780
CALIPER AND SUPPORT FOR A DISC BRAKE
Harvey C. Swift, Birmingham, Mich., assignor to Kelsey-Hayes Company, Romulus, Mich., a corporation of Delaware
Filed Oct. 13, 1966, Ser. No. 586,563
7 Claims. (Cl. 188—73)

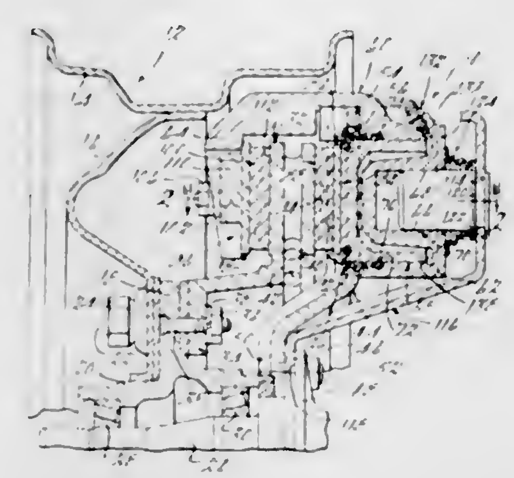

A disk brake construction comprising a rotor; first and second brake shoe means engageable with the opposite sides of the rotor; a caliper member supporting one of the brake shoe means for movement toward and away from the rotor; means defining a bore on the caliper member; piston means slidably disposed within the bore and engageable with the other of the brake shoe means for biasing the same toward the rotor; a stationary torque reaction member, and means including shaft means and means slidably engageable with the shaft means connecting the members, whereby an increase in fluid pressure in the bore results in the piston means being biased in one direction to engage one of the brake shoe means with the rotor and the caliper member being biased in the opposite direction to engage the other of the break shoe means with the rotor, the reaction torque developed upon engagement of the brake shoe means with the rotor being transmitted directly to the stationary torque reaction member at least partially through the means connecting the members.

3,395,781
VELOCITY LIMITER
Thomas Trocki, and Eugene E. Olich, San Jose, Calif., assignors to General Electric Company, New York, N.Y., a corporation of New York
Filed Oct. 23, 1965, Ser. No. 504,048
3 Claims. (Cl. 188—96)

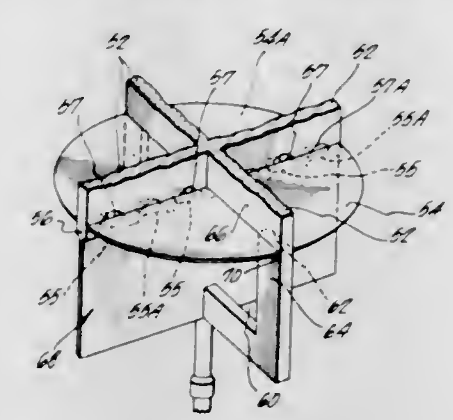

This describes a velocity-limiting device wherein a control member is reciprocable in a fluid-filled hollow member, the control member including flaps which are pivotable from a position parallel to the direction of travel of the control body when the control member moves in one direction to a position transverse of the direction of travel of the control body when the control member moves in the other direction whereby the resistance to motion of the control member is less in the one direction than in the other.

3,395,782
SYNCHRONOUS SELF-SHIFTING CLUTCHES
Herbert Arthur Clements, Oatlands Park, Weybridge, Surrey, England, assignor to S.S.S. Patents Limited, London, England
Filed Mar. 4, 1966, Ser. No. 531,801
Claims priority, application Great Britain, Apr. 5, 1965, 14,391/65
6 Claims. (Cl. 192—67)

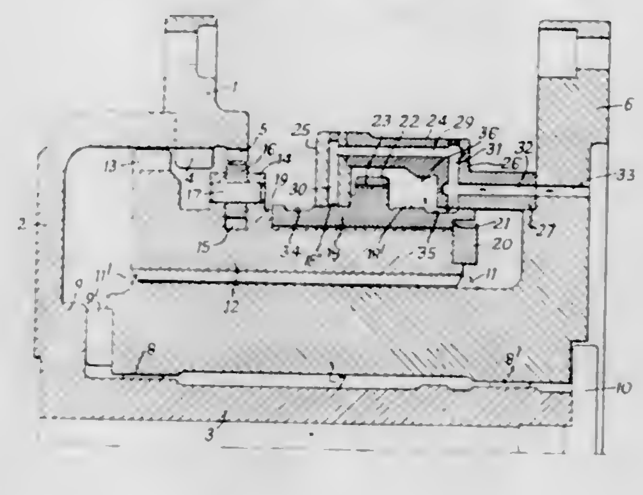

A synchronous self-shifting clutch wherein clutch engagement and disengagement involve helical movement of an intermediate member relative to one of the clutch members, and wherein the movement of the intermediate member in at least one direction is damped by a dashpot which includes a piston structure movable with the intermediate member. In order to prevent reduction of the damping action by the expulsion of liquid from the dashpot through its feed duct, the duct is blanked by a surface on the piston structure during at least part of the movement of the intermediate member.

3,395,783
SAFETY SYSTEM FOR MACHINE MAINTENANCE WORKERS
George S. Allin, Jr., Green Bay, Wis., assignor to Northwest Engineering Corporation, Green Bay, Wis., a corporation of Wisconsin
Filed Sept. 21, 1965, Ser. No. 488,844
4 Claims. (Cl. 192—83)

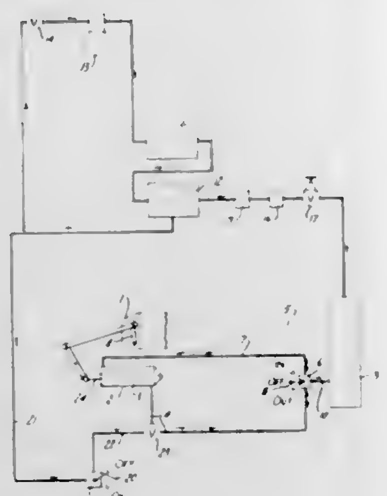

An over-center drive clutch actuated by an air cylinder and piston controlled by a valve located in the cab of a machine is provided with a safety actuator imposing a higher air pressure on the side of the piston which holds the piston in a position of clutch disengagement. The safety actuator is a valve disposed generally remote from the cab and out of sight of the operator in the cab, and which connects and disconnects a high pressure source with the cylinder to thereby over-ride any attempt by the operator to engage the clutch, whereby a repair man working on the machine may be safe from a possibility that the machine will be started until he completes his work.

3,395,784
AUTOMATIC DEVICE FOR COUNTING ARTICLES AND DIVIDING THE SAME INTO GROUPS
Joseph S. Kanarek, 5435 W. 63rd St., Chicago, Ill. 60638
Filed Oct. 12, 1966, Ser. No. 586,291
4 Claims. (Cl. 198—24)

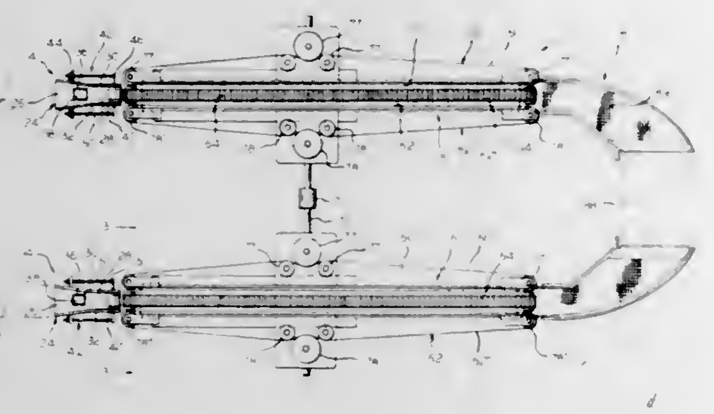

An automatic article counting device has an input chute and output means, a conveyor receives articles from the input chute and delivers the same to said output means in predetermined increments of time, a first drive means is associated with the conveyor and moves the same so that the articles are received and conveyed equidistantly spaced in groups, and a second drive means advances the conveyor after the last article of each group a distance greater than the interval between the articles of the group.

3,395,785
ARRANGEMENT OF SORTING DEVICE FOR TIMBER, IN PARTICULAR FOR LOGS
Alpo Rysti, Frisans, Finland, assignor to Sateko Oy, Helsinki, Finland, a corporation of Finland
Filed Oct. 6, 1966, Ser. No. 584,766
7 Claims. (Cl. 198—38)

A device for sorting timber includes toggles which carry logs and which are movable upon parallel guides. Flaps are provided upon the guides at each sorting station which can be opened to tilt a toggle and thereby discharge a log into the selected sorting station. Guiding surfaces restore tilted toggles to their initial positions.

3,395,786
APPARATUS FOR DRYING COATED SHEET STOCK
Thomas J. Rosema, Grand Rapids, Mich., assignor to General Research, Inc., Grand Rapids, Mich., a corporation of Michigan
Original application Jan. 23, 1964, Ser. No. 339,788, now Patent No. 3,289,814, dated Dec. 6, 1966. Divided and this application July 22, 1966, Ser. No. 568,099
2 Claims. (Cl. 198—134)

A device for drying sheet stock which has been coated with either quick drying or slow drying coating material. It consists of an endless wicket conveyor whose upper portion is partially enclosed in a heating apparatus, an endless tape conveyor vertically displaced from the wicket conveyor and whose input station is vertically displaced from that of the wicket conveyor, and a shunt conveyor pivoted about a horizontal axis at the delivery end of a sheet coating machine such that its elevation can be adjusted to shunt coated sheet stock to either the wicket or belt conveyor.

3,395,787
CIGARETTE CASE
Laurance F. Plaskan, West Bend, Wis., assignor to Amity Leather Products Co., West Bend, Wis., a corporation of Wisconsin
Filed Nov. 8, 1967, Ser. No. 681,409
7 Claims. (Cl. 206—41)

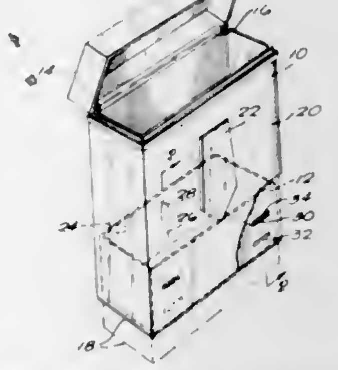

A cigarette case for housing packages of cigarettes, the case being longitudinally expandable to predetermined extents to accommodate cigarette packages of different lengths.

3,395,788
LURE CONTAINER WITH SELF-CONTAINED TENSION RETAINED CLOSURE
Truman F. Gill, P.O. Box 909, Beeville, Tex. 78102
Filed Apr. 17, 1967, Ser. No. 631,261
6 Claims. (Cl. 206—45.34)

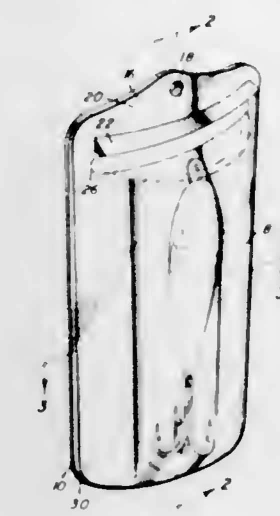

A pocket-size transparent envelope-type container provides a pouch for artificial lures and bait. It serves as (1) a manufacturer's special article (lure) package (2) a tackle store's lure display and safe merchandising packet and (3) as a multipurpose lure and container for anglers. The angler can carry it uncluttered in his tackle box or shirt pocket. It embodies a unique self-contained tension retained closure which seals itself, is contoured to fit the shirt pocket, and springs open when squeezed. Also, it is provided above the entrance-exit with a water deflector.

3,395,789
CARRIER FOR FORMING WOUND PACKAGES AND METHOD OF MAKING THE SAME
Richard V. O'Berry and William R. Shuler, Rock Hill, S.C., assignors to Star Paper Tube, Inc., Rock Hill, S.C., a corporation of South Carolina
Filed Feb. 18, 1966, Ser. No. 528,621
7 Claims. (Cl. 206—59)

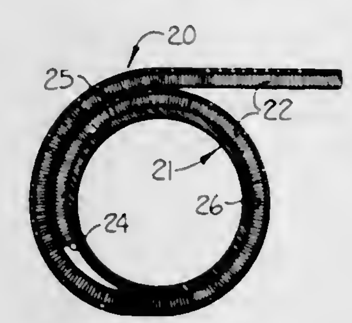

A carrier for forming packages of wound material comprising a tube formed of wound sheet material having a curved arcuate flap preferably formed integral therewith and extending from the periphery of the tube and substantially conforming to the curvature of the tube and being biased toward the tube to define an entrapment zone between the flap and the tube adapted to frictionally engage the innermost end of material wound on the carrier, and wherein the windings of the tube are adhesively secured together, with adhesive, which initially served to bond the flap against the tube to obtain the conforming flap curvature, having been rendered ineffective to provide the entrapment zone.

3,395,790
APPARATUS FOR SETTING HAIR
Jacque A. Smith, Santa Clara, Calif., assignor, by mesne assignments, to Clifton C. Cottrell, San Jose, Calif., trustee
Filed Aug. 30, 1965, Ser. No. 483,493
5 Claims. (Cl. 206—65)

The roller of the present invention has a smooth, frustoconical external shape. A set of such rollers is employed so that the smaller diameter end of each roller has substantially the same diameter as the larger diameter of the next smaller roller.

To obtain a flowing swirl style, the rollers are arranged with the smaller diameter end of each roller pointing toward a common pivot point. For obtaining a long reverse curve style, the rollers are arranged side-by-side with their axes in parallel relation and with the smaller diameter ends of adjacent rollers pointing in opposite directions.

3,395,791
AUTOMATICALLY ADJUSTABLE LOCK DEVICE
Earl J. Graser, Monroe, La., assignor to Olinkraft, Inc., a corporation of Delaware
Filed Feb. 27, 1967, Ser. No. 618,719
7 Claims. (Cl. 206—65)

In a blank for a wrap-around article carrier, a lock device which is operative to adjust for variations in package perimeter resulting from variations in size of articles packaged.

3,395,792
DISPLAY
Charles O. Larson, Sterling, Ill., assignor to Chas. O. Larson Co., Sterling, Ill., a corporation of Illinois
Continuation-in-part of application Ser. No. 640,015, May 22, 1967. This application Aug. 29, 1967, Ser. No. 664,159
14 Claims. (Cl. 206—80)

A display is disclosed including a rectangular card having first and second transverse fold lines thereacross which provide, when folded, a display panel, a support leaf overlying the adjacent end of the display panel, and an upwardly directed display flap overlying the support leaf; the upper end of an article holding bag is interposed between the support leaf and the display panel and fastening means, such as staples secure the article holding bag to

the card, and aligned openings are provided through the display flap, the support leaf and the display panel whereby the package may be hung on a hook or the like; the card further has a line of perforations thereacross pro-

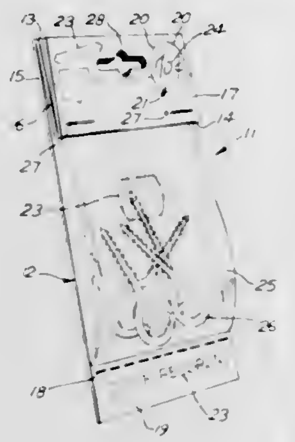

viding a detachable tab thereon which may be used as a re-order tab, and a removable price knockout on the display flap which exposes an unmarked surface of the card for remarking when removed.

3,395,793
METHOD OF ORE SORTING BASED ON DIFFERENTIAL INFRARED EMISSION
Richard L. Thompson, Killarney Heights, New South Wales, Australia, assignors to The Colonial Sugar Refining Company Limited, Sydney, New South Wales, Australia, a company of Australia
No Drawing. Filed Nov. 10, 1965, Ser. No. 507,224
Claims priority, application Australia, Dec. 3, 1964, 52,477; May 7, 1965, 58,530
8 Claims. (Cl. 209—3)

Method of sorting rocks containing a mineral of relatively low thermal absorptivity ("absorptivity" is defined as $(k\rho c)^{1/2}$) from barren rocks of relatively high thermal absorptivity in which members of a batch of unsorted rocks are exposed individually to a heat flux for a period of time just sufficient to render exposed mineral detectably more infrared emissive than host rock, detecting the infrared emission from each rock by translating the detected infrared radiation into electrical signals diagnostic of the mineral content of the rock, and sorting the rocks in response to the electrical signals.

3,395,794
COMPONENT SIZING APPARATUS
Eduard C. Petry, Hopkins, Minn., assignor to Fabri-Tek Incorporated, Edina, Minn., a corporation of Wisconsin
Filed May 5, 1966, Ser. No. 547,930
9 Claims. (Cl. 209—73)

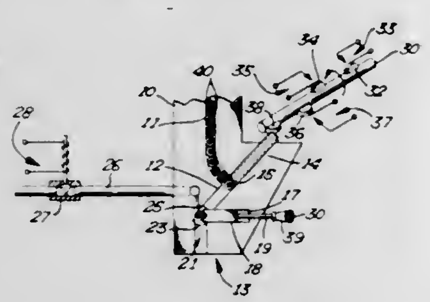

Sizing apparatus for magnetic elements comprising a body having a pair of intersecting bores. Elements are put into the body through an egress in the first bore to fall by gravity to the point of intersection of the bores. A reciprocating plunger with a magnetic tip is mounted in the second bore such that it will hold an element which reaches the intersection, and will carry that element through the second bore to a point of inspection, while at the same time blocking the fall of any other elements from the point of intersection. At the inspection station a V-shaped calibration member grasps the element from the magnetic tip and holds it at the inspection station while the plunger reciprocates to pick up another element. While held in the V-shaped member, the element is inspected by photoelectric means which in turn determine the placement of the element after ejection from the body. Following the inspection, a pneumatic jet is provided to knock the element from grasp of the V-shaped member for ejection from the body.

3,395,795
TABLE SILVER ASSORTING MACHINE
Aldrich L. Jackson, Eustis, Fla., assignor of one-third each to James C. Jackson, Pompano Beach, Fla., Conway A. Jackson, Tavares, Fla., and John H. Lindstrom, Greenwich, Conn.
Filed July 13, 1966, Ser. No. 564,791
16 Claims. (Cl. 209—74)

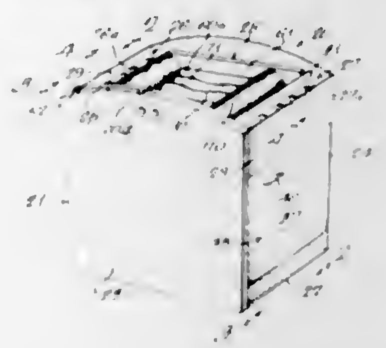

Silverware sorting apparatus including a frame and a silverware holding cradle assembly mounted on the frame for oscillating movement. The cradle assembly includes adjustable means at opposite ends thereof for selectively discharging pieces of silverware of different size and shape, and rotary drums are provided at said cradle assembly ends for picking up tined pieces of silverware. Storage bins are movably mounted on the frame adjacent the ends of the cradle assembly for receiving discharged pieces of silverware in different compartments of the storage bins.

3,395,796
SCATTER TYPE PNEUMATIC SIFTER
Rudolf Ruegg, Zurich, Switzerland, assignor to Escher Wyss Aktiengesellschaft, Zurich, Switzerland, a corporation of Switzerland
Filed Aug. 8, 1966, Ser. No. 570,880
Claims priority, application Switzerland, Sept. 13, 1965, 12,698/65; June 9, 1966, 8,373/66, 8,374/66
12 Claims. (Cl. 209—139)

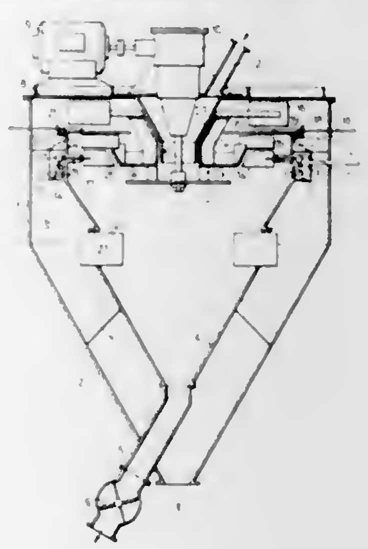

A scatter type pneumatic sifter or separator includes a scattering space enclosed by an inner housing and

containing a rotary scattering plate and a selector wheel. An outer housing defines a separating chamber which surrounds the scattering space. The uppermost regions of the scattering space and the separating chamber communicate through an annular zone which contains a fan wheel. The lower regions of the separating chamber and the scattering space are formed as hoppers and are interconnected by a controlled air flow passage. A plurality of circumferentially spaced guide blades is provided and each is rotatable about an axis radial to the axis of rotation of the scattering plate. The guide blades lie beneath the selector wheel. Adjustment of the guide blades permits control of the degree of fineness of the separated material.

3,395,797
MAGNETIC SEPARATION METHOD AND CONSTRUCTION
Sherwood G. Haw, North Canton, Ohio, assignor to The Banister Corporation, Hubbard, Ohio, a corporation of Minnesota
Filed Mar. 24, 1966, Ser. No. 537,089
11 Claims. (Cl. 209—214)

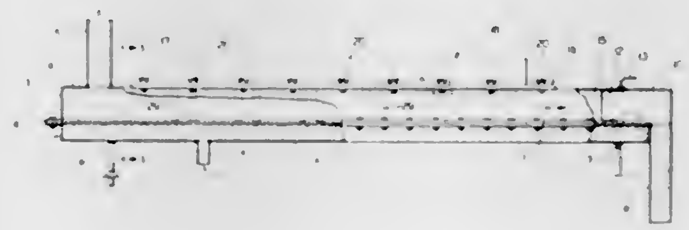

1. The method of separating magnetic particles from comminuted magnetic-particle-impurity-containing material, including the steps of forming a bed of fluidized comminuted magnetic-particle-impurity-containing material on a fluid pervious surface, locating a multiplicity of magnetized surfaces in a path of flow of said fluidized material, flowing the fluidized material past said magnetized surfaces, the fluidized material in fluidized state releasing the magnetic particles to flow freely relative to the comminuted material containing said magnetic particles and to migrate by magnetic attraction to said magnetized surfaces past which the fluidized material flows, and depositing said magnetic particles on said magnetized surfaces by said magnetic attraction.

6. Apparatus for magnetic separation of magnetic particles from comminuted magnetic-particle-impurity-containing material, including a fluidized bed housing, means for introducing comminuted magnetic-particle-impurity-containing material into the housing, means including diffuser means for introducing air under pressure into the housing to form a fluidized bed of said comminuted material, means locating a multiplicity of fingers having magnetized surfaces into the fluidized material, means for flowing said fluidized comminuted material through said housing and past said magnetized surfaces, and means for maintaining the bed of fluidized material in said housing in a state substantially completely filling the housing as the fluidized material flows through said housing and past said fingers.

3,395,798
MATERIALS SEPARATING LOADER BUCKET
Walter A. Erickson, P.O. Box 623, Anchorage, Alaska 99501
Filed Feb. 20, 1968, Ser. No. 706,842
9 Claims. (Cl. 209—260)

The bucket, which is adapted to be mounted on a loader-type vehicle lift for raising and lowering and for tilting movement, has a separator screen mounted in the lower portion therefor. A pair of push shafts extend downwardly from the screen and engage cams on the shafts of rotary hydraulic motors for vibrating the screen vertically while water is being discharged onto the materials in the bucket through apertures in the rear wall. The smaller mate-

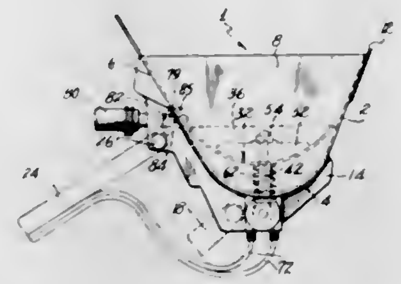

rials and water pass through the vibrated screen and fall through openings in the bottom of the bucket while large aggregate is retained on the screen and discharged from the bucket at a suitable location.

3,395,799
METHOD AND APPARATUS FOR THE TREATMENT OF SEWAGE
Harold I. Kurtz, 113 Bellefield Drive, Butler, Pa. 16001
Filed Mar. 30, 1967, Ser. No. 627,224
13 Claims. (Cl. 210—1)

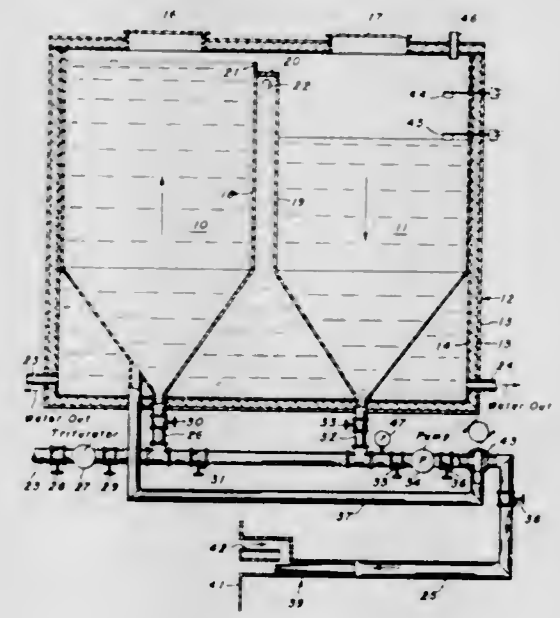

This invention relates to the treating of raw sewage and particularly to the heat treating of raw sewage aboard water-borne vessels. According to the invention raw solid-containing sewage is first passed through a triturator where the solid particles are finely ground. Thence the raw sewage is influent into a retention tank where the sewage is heat treated at a pre-determined temperature for a predetermined time before finally being discharged overboard. Preferably two tanks are provided, the first tank discharging into a second tank over a weir intermediate the two tanks. For a period of time the sewage is circulated between the first and second tanks until a level in the second tank reaches a pre-determined level whereupon a discharge cycle is initiated and the heat treated sewage is discharged overboard. In the case of water-borne vessels, the tanks would normally be designed to accommodate 24 hours accumulation of sewage from the crew members. Heat for the treating of the sewage may be supplied from any suitable source, however, the preferred

source is the heated water from the engine cooling system aboard the vessel or other heated water from the cooling systems of other apparatus, such as generators, located aboard the vessel. In this manner an economical source of heat may be supplied. The heated engine cooling water is circulated around the sewage retention tanks so that there is no contact between the heating medium and the sewage liquor. By using the present invention all pathogenic bacteria are effectively destroyed.

3,395,800
SEWAGE TREATMENT AND APPARATUS THEREFOR
Leon S. Kraus, 1116 W. Moss Ave., Peoria, Ill. 61606, and Edwin B. Fall, Jr., 207 Twin Oaks Court, East Peoria, Ill. 61611
Filed July 23, 1965, Ser. No. 474,389
16 Claims. (Cl. 210—66)

A settling tank for effecting gravitational settling of solids from a liquid feed containing the same which settling tank includes influent and effluent channels arranged on the outer peripheral portions of the tank. The influent and effluent channels are preferably substantially continuous around such settling tank and in juxtaposition to each other. A plurality of downcomers or equivalent influent discharge means are mounted to the influent channel.

A scum remover which can be used either alone or in the above-described settling tank includes a skimmer mounted to the settling tank for collecting scum and other low density materials floating on the liquid surface thereof, a mixing chamber mounted to the tank and means for transmitting the scum and other low density materials collected by the skimmer into the mixing chamber.

3,395,801
FILTRATION PROCESS
Hans Müller, Erlenbach, Zurich, Switzerland
Filed May 25, 1964, Ser. No. 370,071
Claims priority, application Switzerland, May 28, 1963, 6,616/63
16 Claims. (Cl. 210—68)

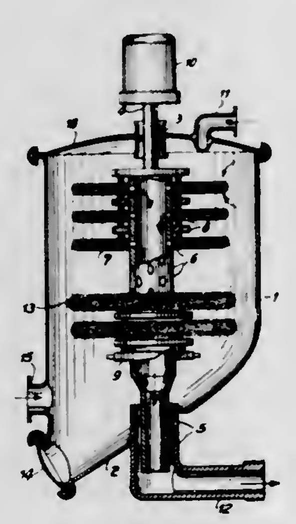

A process for drying filter cake formed on a solids-impermeable, liquid-permeable filter element wherein liquid is removed from the interstices of the filter cake by first passing a drying gas at relatively high pressure through the filter cake in the direction toward and through the liquid-permeable filter element, thereby also mechanically blowing out moisture from the filter cake, and whereby the thus partially dried filter cake is further dried by passing drying gas at a lower elevated pressure therethrough, optionally followed by subjecting the filter cake to a partial vacuum.

3,395,802
FLUID FILTER CONDITION INDICATORS
Nils O. Rosaen, Bloomfield Hills, Mich., assignor to The Rosaen Filter Company, Hazel Park, Mich., a corporation of Michigan
Continuation-in-part of application Ser. No. 465,346, June 21, 1965. This application Dec. 16, 1966, Ser. No. 602,210
16 Claims. (Cl. 210—90)

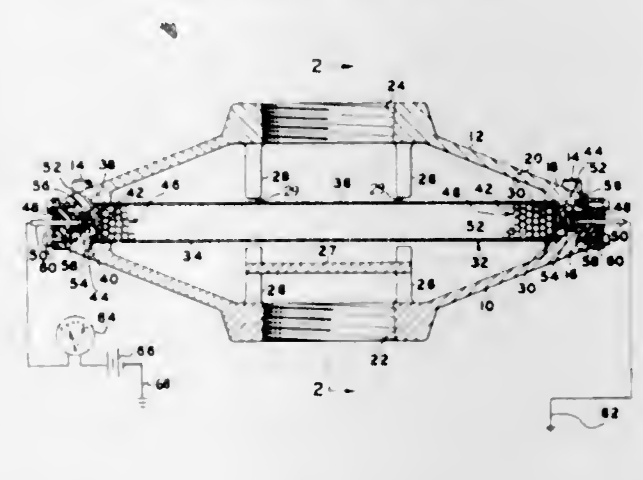

Indicators for the clogged condition of filter elements in fluid filtering systems, each comprising an electrical circuit with the indicator in series with the filter element. The resistance of the filter element varies accordingly to its clogged condition and results in a signal displayed by the indicator.

3,395,803
APPARATUS FOR FILTRATION OF LIQUIDS IN CONTAINER
Seiji Sumimoto, Tokyo, and Morio Sumimoto, Yokohama, Japan, assignors to Sumimoto Scientific Institute Co., Ltd., Tokyo, Japan
Filed Mar. 3, 1966, Ser. No. 531,563
Claims priority, application Japan, Mar. 5, 1965, 40/12,624
7 Claims. (Cl. 210—122)

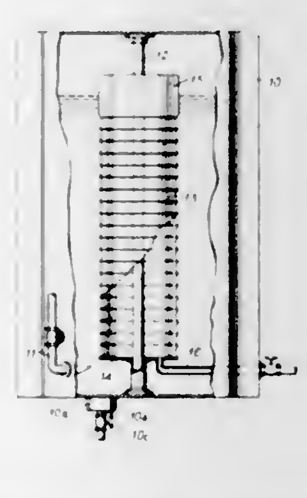

A fluid filter assembly having a cylindrical filter medium submerged within liquid in a container. The filter medium is vertically expandable and collapsible with the top secured to a float and the bottom to a support. The filter medium is subject to expanding and collapsing in response to changing liquid level.

3,395,804
FILTER ASSEMBLY RELIEF VALVES
Robert J. Offer, Racine, Wis., assignor to Walker Manufacturing Company, Racine, Wis., a corporation of Delaware
Filed Dec. 30, 1964, Ser. No. 422,383
2 Claims. (Cl. 210—130)

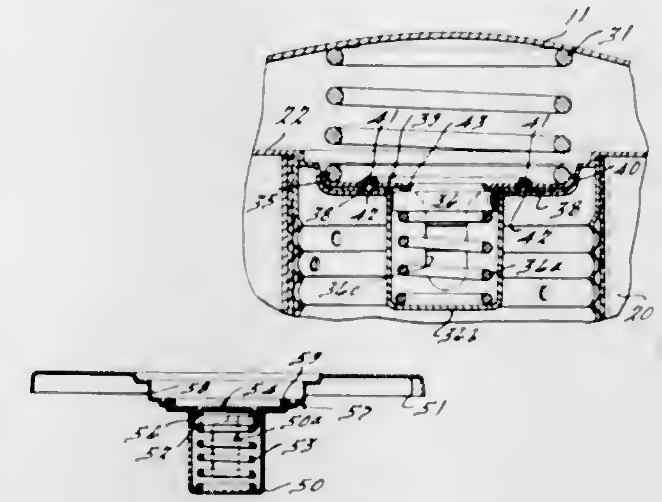

Two filter element relief valves, one valve having the valve cage formed integrally from the filter end cap and having the valve seat member secured between folded over portions of said end cap; the other valve having a separate valve cage inserted into a central opening in a filter end cap, and seating thereon, and secured thereon by a valve seat member which is frictionally secured to said end cap.

3,395,805
APPARATUS FOR CONTACTING OR SEPARATING MATERIALS
James Holden Clayton, London, England, assignor to G. A. Harvey & Company (London) Limited, London, England, a British company
Filed Dec. 30, 1964, Ser. No. 422,312
Claims priority, application Great Britain, Jan. 4, 1964, 445/64; Jan. 10, 1964, 1,206/64
13 Claims. (Cl. 210—179)

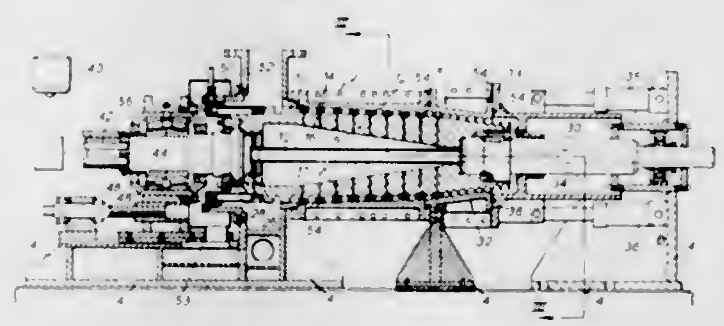

Apparatus for filtering or contacting, having two oppositely tapering grooves in a rotor and stator respectively and porous or foraminous portions in the lands between the grooves, the arrangement being such that thin shavings of flowable material may be squeezed between said portions by the rotation of the rotor, whereby the material may be forced against said faces for the purpose of filtering or contacting.

3,395,806
APPARATUS FOR EXTRACTING OIL FROM SOYBEANS
Willie L. Payne, Salisbury, Md., assignor to A. W. Perdue & Son, Inc., Salisbury, Md., a corporation of Maryland
Filed Apr. 8, 1965, Ser. No. 446,598
4 Claims. (Cl. 210—345)

For use in extracting oil from soybeans, an extraction basket having a perforated bottom wall whose inner surface includes polytetrafluoroethylene for preventing

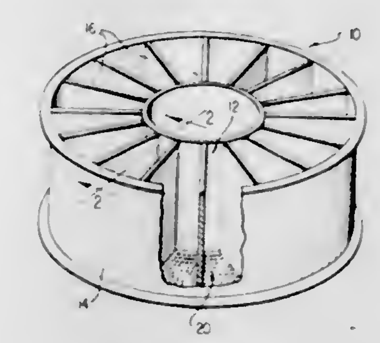

soybeans from adhering thereto, during an extraction process.

3,395,807
CENTRIFUGING MACHINE
Burton A. Fierstine, Saginaw, Mich., assignor to Baker Perkins Inc., Saginaw, Mich., a corporation of New York
Filed May 4, 1967, Ser. No. 636,186
9 Claims. (Cl. 210—376)

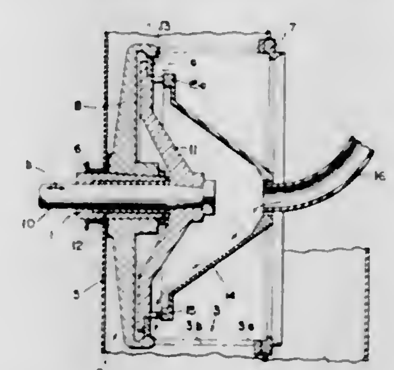

A centrifuging machine of the continuous pusher type comprising a rotary basket having an essentially cylindrical screen structure for the separation of solids from liquid in which the screen structure is formed by a layer of hemispheres which are circumferentially joined together and so oriented that an essentially smooth, cylindrical, perforate surface is provided on the inner periphery of the cylindrical screen structure.

3,395,808
BASE FOR DIFFERENT FILTERS
Robert J. Offer, Racine, Wis., assignor to Walker Manufacturing Company, Racine, Wis., a corporation of Delaware
Filed Aug. 4, 1966, Ser. No. 570,332
1 Claim. (Cl. 210—444)

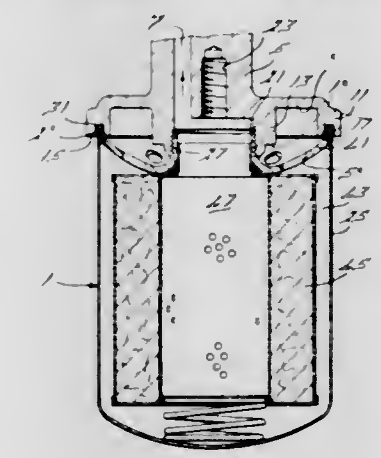

Liquid filter devices wherein a base for receiving such devices has plural threaded portions and cooperating sealing means to enable the use of multiple types of filtering units thereon.

3,395,809
BATTERY DISPENSER
Frank Mellion, Providence, R.I., assignor to Jo-Dee Corp., Warwick, R.I., a corporation of Rhode Island
Filed Dec. 21, 1965, Ser. No. 515,303
2 Claims. (Cl. 211—59)

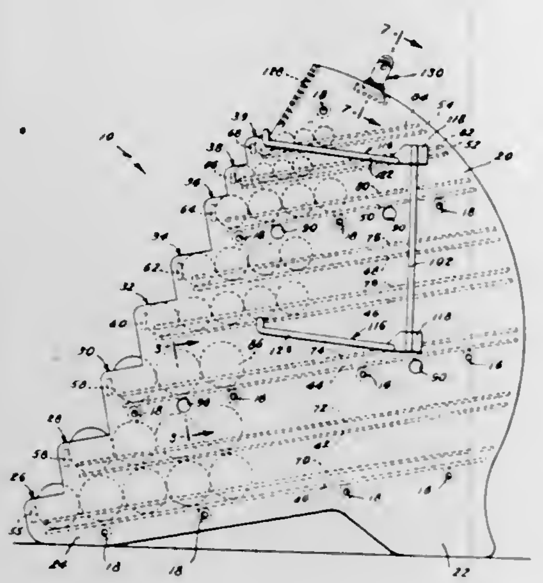

A battery dispenser having a plurality of interconnected units and including a bracket assembly that is joined to a side wall of an outer unit and that provides for the display of packaged articles on said dispenser, the bracket assembly having spaced rods mounted thereon for receiving said packaged articles.

3,395,810
HEAT TREATING BASKET
Carl G. A. Johnson, Rocky River, Ohio, assignor to The Alloy Engineering Company
Filed Nov. 15, 1965, Ser. No. 507,863
8 Claims. (Cl. 211—126)

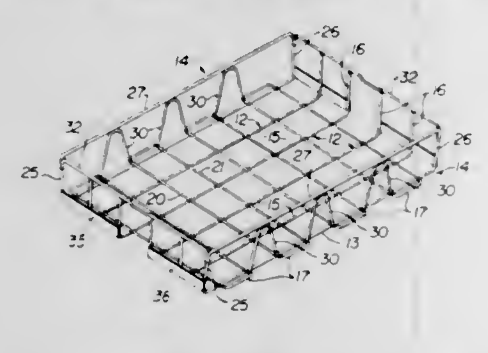

A heat treating basket comprised of rod-like elements defining connected side, bottom and end structures, the bottom structure having portions which extend beyond the side structures and are engageable on the side structures of a lower of two stacked baskets, and the bottom structure having other portions which are received between upper portions of the side structures of the lower of two stacked baskets.

3,395,811
GARMENT RACKS
John Bellock, Tenafly, N.J., assignor to J. Spiegel Manufacturing Corp., a corporation of New Jersey
Filed Mar. 13, 1967, Ser. No. 622,687
9 Claims. (Cl. 211—178)

A knock-down garment rack which for its assembly requires no tools, bolts, nuts, screws and the like. A rectangular frame in vertical plane, is supported on releasably engaged legs. Said frame and legs are of tubular metal stock. The frame is in sections whose successive parts are in telescopic relation. Such joints offer stop means to limit their length and they may have cooperatively engaging locking teats. The upright side posts of the frame extend above the frame's upper rail, as separate sections, each of which is permanently hinged to the end sections of the upper rail. The posts carry brackets for frictional mounting of shelf structures above the upper and lower rails. The mounting of the shelves, maintain the assembly in sturdy condition without the aid of the teat locks. For a larger rack, its upper and lower rails

are of course longer and have a central section which releasably mounts short center posts. Separate shelf structures are provided between said center posts and the main posts. Assembly is effected in all instances by slide and push motions, except for two swinging motions at the hinge connections.

3,395,812
BOOM SWING SYSTEM
Carroll H. Arnold, Westminster, Mass., assignor to Wain-Roy Corporation, Hubbardston, Mass., a corporation of Massachusetts
Filed Mar. 21, 1966, Ser. No. 536,020
6 Claims. (Cl. 212—66)

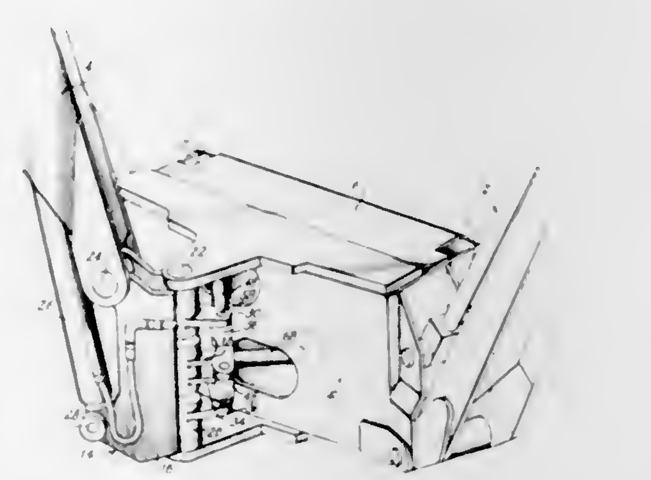

A swing system for swinging a boom from side to side employing two hydraulic jacks which extend during their working stroke, each connected between the stationary boom support and the boom through a link which bears during part only of its working stroke on an abutment carried on the support.

3,395,813
APPARATUS FOR TURNING PRODUCTS
Theodore B. Bruce, Lafayette, and John F. Nelson, Concord, Calif., assignors to United States Steel Corporation, a corporation of Delaware
Filed Sept. 9, 1966, Ser. No. 578,398
6 Claims. (Cl. 214—1)

An apparatus for turning a product supported upon a rotatably mounted beam. Stops engage the beam in its elevated position and in its lowered position. Energy ab-

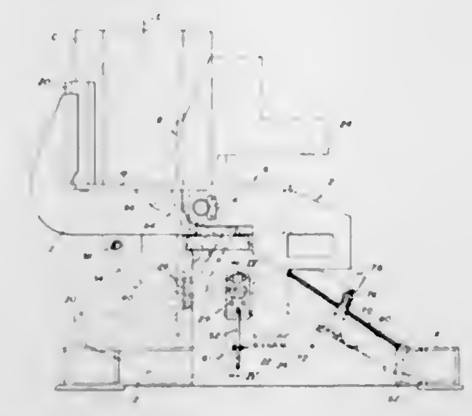

sorbing and shock absorbing cylinders dampen the motion of the beams.

3,395,814
BALE WAGON
Gordon E. Grey, Kingsburg, Calif., assignor to Sperry Rand Corporation, New Holland, Pa., a corporation of Delaware
Filed Feb. 7, 1966, Ser. No. 525,644
11 Claims. (Cl. 214—6)

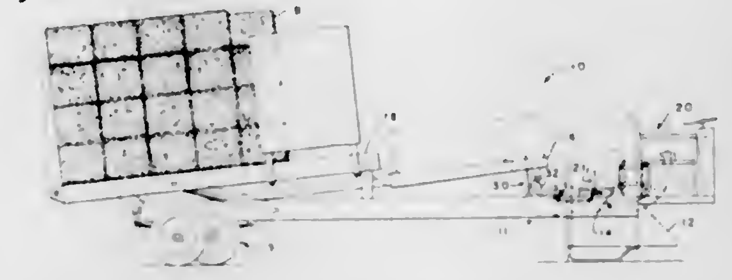

A bale wagon which is adapted to automatically stack bales on a load-carrying portion thereof and having a mechanism for turning selected bales during the stacking process so that vertical stacks can be formed in two different patterns.

3,395,815
MECHANICAL CAR-PARKING TOWER
Stuart Johnson, "Red Oaks" Southwell, Eccleshall, Staffordshire, England
Filed Dec. 15, 1964, Ser. No. 431,239
22 Claims. (Cl. 214—16.1)

1. A multi-story storage installation which is comprised of a storage tower structure formed essentially as a stationary regularly spaced vertical series of identical annular storage decks whose circular inner boundaries lie concentric to a common vertical axis, and which is served throughout by means of an access lift incorporating one or more lift cage deck members of sufficient dimensions to accommodate at least two unit loads which are especially automobiles although not necessarily so, side by side with their longitudinal axes parallel to, equidistant from and on both sides of a common vertical plane, the lift cage being constrained by means of a hoisting carriage to move within the storage structure in such a manner that the common vertical axis of the storage structure is at all times contained by the common vertical plane of the lift cage so as to enable the lift cage to be elevated and rotated with respect to the storage structure, each lift deck being formed to come into close direct proximity with the inner boundaries of the annular storage decks such that wherever a lift deck can be brought into vertical alignment with a storage deck, two or more parallel access paths to the storage positions become simultaneously established, whereupon by means of traversing trolleys incorporated into the lift deck, the unit loads can be manipulated longitudinally into and out of their storage positions

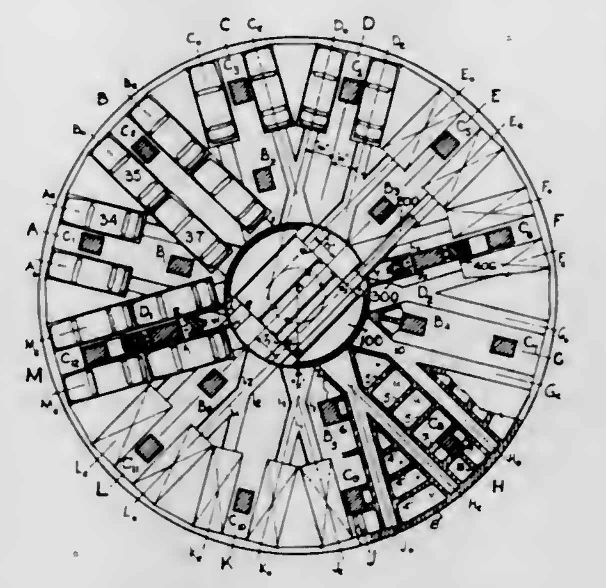

along axes which are parallel to and equidistant from regularly spaced diametral axes of the annular storage decks and which lie tangentially to a circle whose diameter is defined by the parallel parking axes of the unit loads.

3,395,816
HYDRAULICALLY-OPERATED MECHANISMS SUITABLE FOR USE IN DIGGING MACHINES
John E. Hodges, Purton, near Swindon, Philip G. Joyner, Brockworth, and Cedric D. Weaver, Shurdington, near Cheltenham, England, assignors to Dowty Hydraulic Units Limited, Cheltenham, England, a British company
Filed Mar. 24, 1967, Ser. No. 625,784
Claims priority, application Great Britain, Apr. 7, 1966, 15,638/66
14 Claims. (Cl. 214—138)

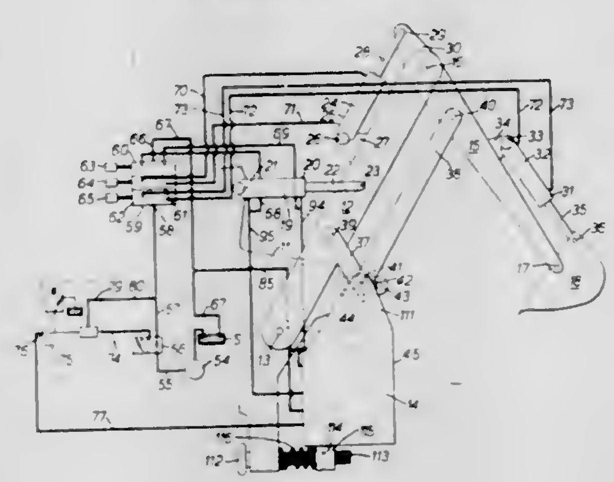

A digging mechanism includes a parallelogram linkage operable by two rams normally controlled by manually-operable valves. When it is required automatically to cause the digging implement to follow a predetermined path, for example to produce a flat base to a trench being dug, one control valve is isolated from its ram and a single servo valve is brought into operation. This servo valve is so connected to the parallelogram linkage that it is operable by the linkage upon displacement of the remaining normally-operating ram. In this way the ram then controlled by the servo valve superimposes upon the normally-controlled movement of the implement by the other ram such correcting displacement as to achieve the desired predetermined path.

3,395,817
HAND TRUCK FOR MATERIAL HANDLING
Harold C. T. Boyd, 88 Morgan Road, Baie d'Urfe, Quebec, Canada, and Richard A. Evans, 328 39th Ave., Lachine, Quebec, Canada
Filed Sept. 16, 1966, Ser. No. 579,933
2 Claims. (Cl. 214—370)

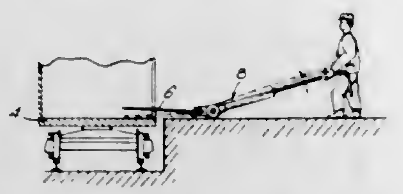

This invention relates to a hand truck having fork members attached to the lower portion thereof for lifting and carrying plate and sheet-like material. Each fork includes a pointed lower prong and an upper prong with a receiving throat formed therebetween. The side of each upper prong adjacent the lower prong is provided with a bead for engaging the upper surface of the material carried.

3,395,818
HAND TRUCK ATTACHMENT
Anthony L. Diebold, Saginaw, Mich., assignor to Great Lakes Express Co., Saginaw, Mich., a corporation of Michigan
Filed Sept. 2, 1966, Ser. No. 576,891
4 Claims. (Cl. 214—372)

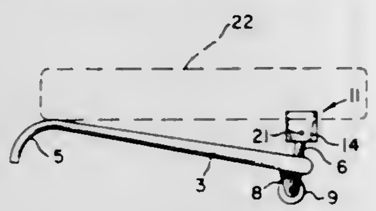

An attachment for a hand truck having a forwardly projecting tongue, the attachment comprising a concave load supporting band having downturned ends to which is pivotally connected a V-shaped member adapted removably to accommodate the forward end of the truck tongue.

3,395,819
SPARE TIRE HOLDER FOR VEHICLES
John A. Fruetel, Rte. 3, Box 813, Albany, Oreg. 97321
Filed Feb. 21, 1966, Ser. No. 529,005
1 Claim. (Cl. 214—451)

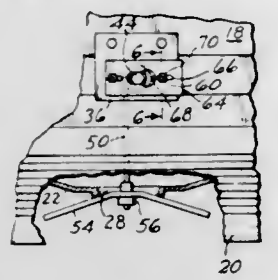

A winch bar is mounted rotatably above the pair of vehicle body frame members which are spaced apart a distance less than the diameter of a spare tire and which are longer than the diameter of the spare tire wheel. A cable secured at one end to the winch bar hangs freely between the frame members and is provided at its free end with a dished bar which centers itself crosswise under the central opening in the wheel. Upon rotation of the winch bar the wheel and tire assembly is drawn upwardly to a horizontal storage position in which the tire resiliently abuts the lower sides of the body frame members. A lock secures the winch bar releasably against rotation to support the tire in the storage position.

3,395,820
FORKLIFT TRUCKS
Leonard S. Mathew, Kingswood, and George W. A. Chapman, Horley, England, assignors to Matbro Limited, Surrey, England, a British company
Filed Apr. 7, 1966, Ser. No. 540,990
Claims priority, application Great Britain, Apr. 22, 1965, 17,123/65
8 Claims. (Cl. 214—671)

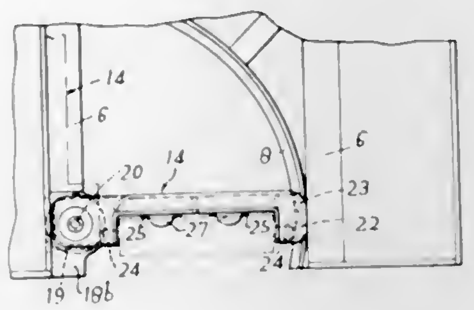

A lift truck comprising a chassis having a pair of forwardly extending members, outwardly extending members supported by said forwardly extending members, front wheels carried by the respective outwardly extending members, driving means coupled to said front wheels for driving them, a mast support arm positioned between said forwardly extending members and hinged at one end to one of said forwardly extending members about a substantially vertical axis, turning means coupled to said mast support arm for turning said mast support arm about said hinge axis, a mast structure hingedly mounted on said arm about a horizontal axis and comprising a first guide which is fixed against vertical movement and a moving guide slidingly mounted on said first guide, said first guide extending downwardly to a position close to the ground, and the frame of said lift truck permitting an unobstructed swinging movement of said arm and mast structure from a forwardly facing position to a position substantially at 90° thereto.

3,395,821
HOLLOW ARTICLE HAVING AN ATTRACTIVE, OPTICAL APPEARANCE
Edwin W. Fuerst, Colrain, Mass., and Robert B. Mason, West Hartford, Conn., assignors to Monsanto Company, St. Louis, Mo., a corporation of Delaware
Application May 13, 1965, Ser. No. 455,452, which is a continuation-in-part of application Ser. No. 391,920, Aug. 25, 1964. Divided and this application Apr. 6, 1967, Ser. No. 628,905
18 Claims. (Cl. 215—1)

A hollow flexible plastic article having the appearance of a series of closely spaced rib-like grooves in its surface. Selectively oriented pearlescent platelets may optionally be incorporated into the plastic, which in combination with the rib-like grooves provide an enhanced optical appearance of alternating shades of color in the article.

3,395,822
NURSING DEVICE
Thomas J. Donleavy, 233 E. 238th St., Bronx, N.Y. 10470
Filed Nov. 7, 1966, Ser. No. 598,139
15 Claims. (Cl. 215—11)

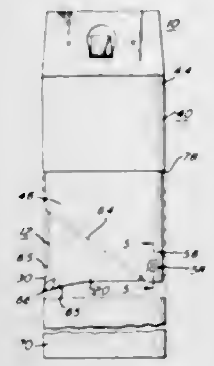

A liquid dispensing means for feeding infants comprising a collapsible container means provided with a top portion having an opening for receiving liquid and a bottom portion with a first corner providing a liquid dispensing nipple protuberance and a second corner, a resilient plastic outer structure means having a top portion and a bottom portion and an opening extending therethrough for removably receiving and securing said container means therein, the bottom portion of said structure means having a diagonally cut-away first corner region for exposing nipple protuberance of said container means and an attaching element at its second corner region for releasably securing said structure means with said second corner portion of said container means, said container means having first and second flaps foldable apart over the top portion of said structure means for allowing said container means to be filled through its top opening with a liquid while secured and positioned within said structure means and subsequently folded together over the top portion of said structure means to enclose the top opening of said container means for sealing liquid therewithin, and clamp means for releasably securing the folded flaps of said container means with said top portion of said structure means.

3,395,823
LUG CONSTRUCTION
Everett Edward Langston, 2932 Elmwood Ave., Bakersfield, Calif. 93305
Filed Nov. 16, 1966, Ser. No. 594,907
2 Claims. (Cl. 217—40)

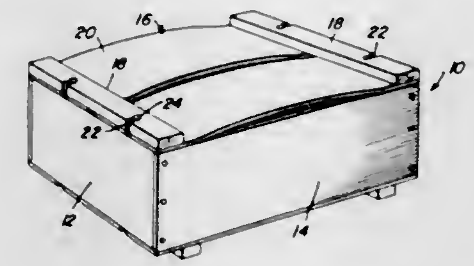

The disclosure herein involved is concerned with a packing crate or lug of the type particularly adapted for the boxing of grapes. This lug incorporates, in addition to the end pieces, side slats and a lid, a bottom having inwardly offset locking cleats receivable in locking relationship to the top cleats of a subjacent lug. The lug bottom is constructed of slats and cleats as a single unit prior to mounting on the end pieces with the mounting of the bottom being effected through the utilization of nails driven through the projecting ends of the bottom slats.

3,395,824
LIQUID CONTAINER COMPOSED OF SQUARE AND/OR RECTANGULAR PLATES
Helmut Gerhard, Weitefeld 5241 (Sieg), Germany
Filed Feb. 17, 1966, Ser. No. 528,212
10 Claims. (Cl. 220—5)

This invention relates to modular receptacle construction plates formed of quadrangularly shaped panels having a margin extending around the periphery of the panel. The margin is formed by three integral face members inclined at 45° angles to one another. Means are provided to strengthen the margin and to extend the margin by the attachment of profile members. The configuration of the three faces enables the construction plates to be interconnected to provide a liquid container having improved strength without the necessity of reinforcing tie bars or struts.

3,395,825
FRANGIBLE CLOSURE FOR AUXILIARY PORT IN ROCKET HOUSING
Richard F. Cottrell, Carmichael, Calif., assignor to Aerojet-General Corporation, El Monte, Calif., a corporation of Ohio
Continuation-in-part of application Ser. No. 482,023, Aug. 12, 1965. This application June 8, 1966, Ser. No. 556,077
3 Claims. (Cl. 220—47)

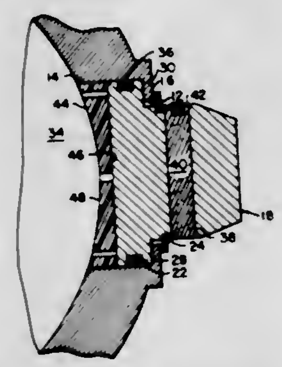

A frangible closure for an auxiliary port in a rocket that is shattered by the detonation of an explosive material. The protective insulating plate of the closure has weakening bores in it so that upon the detonation of the explosive material the insulating plate is completely shattered thereby given a completely clear port for rocket thrust expulsion.

3,395,826
PLASTIC CONTAINER
Samuel L. Belcher, Duane O. Biglin, Jerome R. Grothjan, and Carl E. Koeniger, Toledo, Ohio, assignors to Owens-Illinois, Inc., a corporation of Ohio
Filed Oct. 3, 1966, Ser. No. 583,540
7 Claims. (Cl. 220—60)

1. A one-piece plastic container comprising
a bottom,
a sidewall extending upwardly and tapering outwardly

from said bottom, said sidewall terminating at its upper end in a rim and stacking portion,

said rim and stacking portion including an annular bead integrally formed with said sidewall and extending outwardly from an imaginary straight line element following the angle of taper of said sidewall, said bead forming an externally disposed lower stacking shoulder,

an internally disposed upper stacking shoulder having a lesser radial extent than said lower stacking shoul-

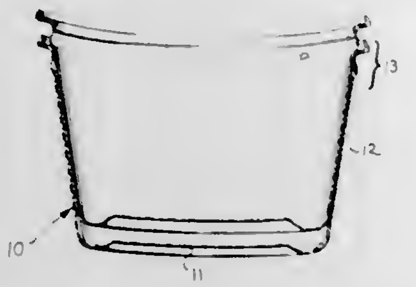

der, said upper stacking shoulder being at least twice as thick as said sidewall, and

a solid injection molded rim extending upwardly and outwardly from said upper stacking shoulder and joined thereto by a web, said injection molded rim extending upwardly from said web, the innermost portion of said injection molded rim having a greater radial extent than said bead to prevent jamming of containers when placed in stacked relationship.

3,395,827
SHEET METAL CONTAINER BODY AND METHOD OF MAKING SAME
John S. Latawiec, Lancaster, Pa., assignor to J. L. Clark Manufacturing Co., Rockford, Ill., a corporation of Illinois
Filed Jan. 19, 1966, Ser. No. 521,563
5 Claims. (Cl. 220—76)

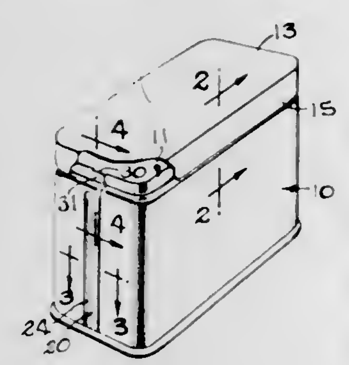

A tubular sheet metal container body includes a double interlocked seam extending along one side and a peripheral top bead adapted to telescope and interlock with a depending skirt on a plastic cover for the container. Above the interlocked seam and adjacent the ends of the body bead are flattened tabs which are overlapped with one another to form an overlapping joint between the bead ends and thereby insure an effective seal between the cover and the body at the joint.

3,395,828
PAINT CAN ATTACHMENT DEVICE
Fred C. Schnabel, 4820 W. 38th St., Minneapolis, Minn. 55416
Filed Aug. 12, 1966, Ser. No. 572,078
1 Claim. (Cl. 220—90)

A tray which fits over an open can of paint, the tray including a large central opening to allow dipping a brush into the paint can, the tray having a series of perforated openings to allow paint from a brush resting upon the tray to drip back into the paint can and the tray includ-

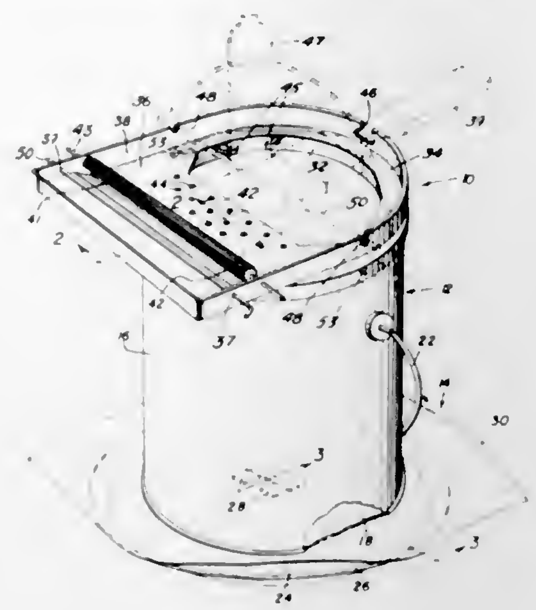

ing a ribbed roller against which a brush may be stroked to remove excess paint.

3,395,829
MEDICATION DISPENSING MEANS
David M. Cogdell, 2827 Skye Drive, Fayetteville, N.C. 28303, William F. McClure, Raleigh, N.C., and Joseph W. Baggett, 365 Valley Road, Fayetteville, N.C. 28305; said McClure assignor of eleven and two-thirds percent to said Cogdell and eleven and two-thirds percent to said Baggett
Filed July 3, 1967, Ser. No. 650,731
10 Claims. (Cl. 221—15)

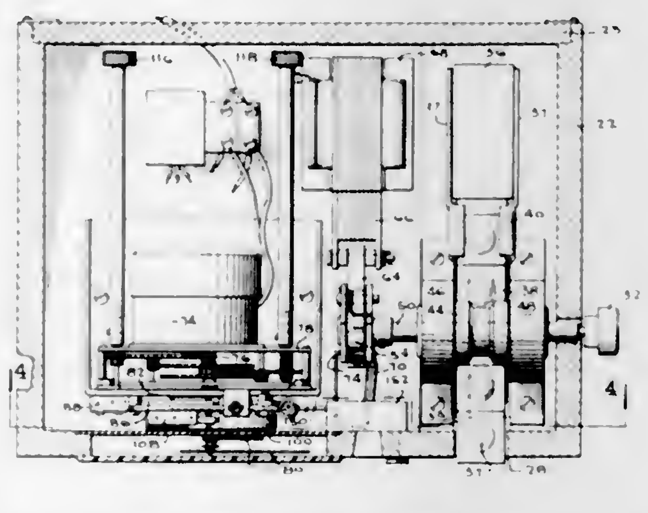

A pill dispensing device having a clock driven cam actuated microswitch for actuating a control relay after passage of an initial time period of substantial duration to partially close an electrical circuit for enabling other clock driven cam actuated switch means to actuate a second relay at periodic intervals of fairly short duration to consequently actuate pill dispensing means for dispensing pills from the device.

3,395,830
DISPENSING CARTON SUITABLE FOR PLASTIC BAGS AND THE LIKE
Kenneth T. Buttery, Kalamazoo, Mich., assignor to Brown Company, Kalamazoo, Mich., a corporation of Delaware
Original application Apr. 18, 1966, Ser. No. 543,221. Divided and this application May 26, 1967, Ser. No. 652,364
2 Claims. (Cl. 221—63)

Apparatus for dispensing singly thin slippery sheetform articles. An inverted U-shaped resilient insert,

around which the articles are folded, presents the outer-

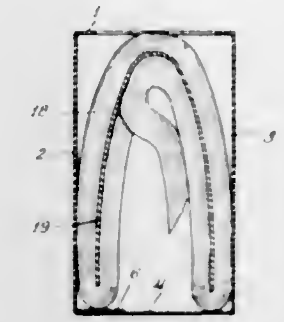

most article to a dispensing slot formed in an enclosing carton.

3,395,831
MOLTEN METAL HANDLING APPARATUS AND METHOD OF PREPARING FOR POURING MOLTEN METAL
Henry D. Minteer, Jr., Moon Township, Allegheny County, Pa., assignor to Vesuvius Crucible Company, Swissvale, Pa., a corporation of Pennsylvania
Filed Mar. 24, 1967, Ser. No. 625,860
2 Claims. (Cl. 222—1)

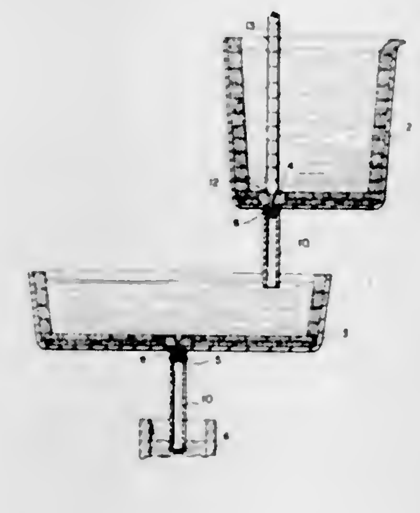

Apparatus for bottom pouring molten metal from a receptacle comprising a nozzle adapted to be mounted in an opening through the bottom of the receptacle and a separate element adapted to be applied to the nozzle, when the receptacle is positioned ready for pouring, to constitute a downward extension of the nozzle confining the molten metal passing through the nozzle. The extension engages and is carried by the nozzle only with the lower portion of the nozzle and the upper portion of the extension disposed one within the other and preferably connected together by a threaded connection. Further, a method of preparing for pouring molten metal from a receptacle having an opening through its bottom with a nozzle mounted in the opening into a molten metal receiver disposed below the nozzle comprising, with the receptacle and receiver disposed in their relative operative positions for pouring, applying to the nozzle a separate element constituting a downward extension of the nozzle confining the molten metal passing through the nozzle and extending down into the receiver. The extension is introduced down into the molten metal receiver and then raised and applied to the nozzle. The receptacle with the nozzle mounted therein and the extension are preferably separately dried and preheated before application of the extension.

3,395,832
CONTROL DEVICE FOR LIQUID DISPENSING MACHINES
Russel W. New, Dallas, Tex., assignor to Meter-All Mfg. Co., Inc., Dallas, Tex., a corporation of Texas
Filed Mar. 10, 1967, Ser. No. 622,322
6 Claims. (Cl. 222—14)

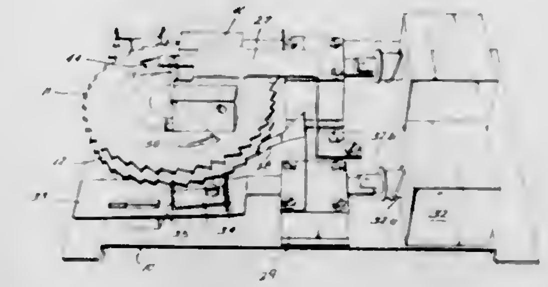

A device for controlling a liquid dispensing machine by stepping one of two parallel ratchet wheels an incremental distance for each unit of credit purchased, with the initial step serving to energize the dispensing mechanism. Stepping the second ratchet wheel in the same direction as the first an incremental distance as each volume of liquid is dispensed that corresponds to one unit of credit until the wheels are returned to their initial relationship to de-energize the vending machine.

3,395,833
GAS FEED TO PRESSURE POUR APPARATUS
Robert B. Rice, Jr., Berkeley, Calif., assignor, by mesne assignments, to Campbell Auto-Pour Engineering, Berkeley, Calif., a corporation of California
Filed July 13, 1966, Ser. No. 564,953
8 Claims. (Cl. 222—61)

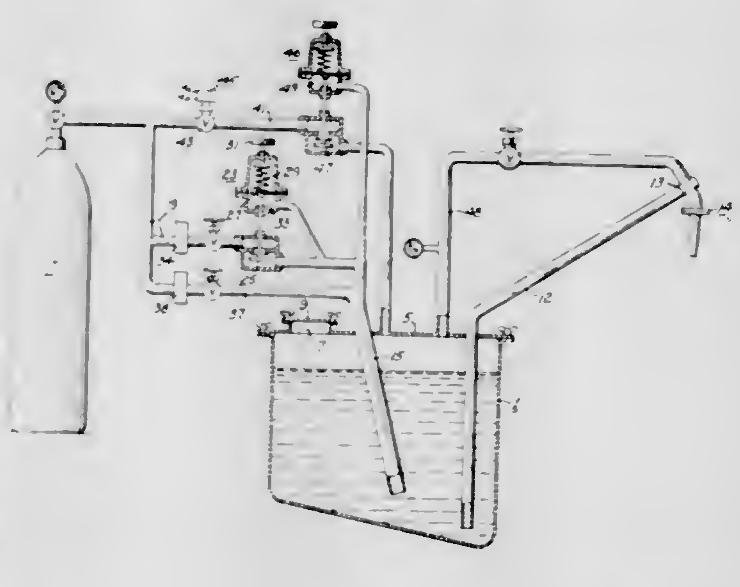

1. Pressure pour apparatus for dispensing of liquid comprising,

a sealable receptacle for holding liquid and providing a chamber in association with such liquid,

a discharge passageway extending upwardly from said receptacle with its lower end below normal liquid levels in said receptacle and having at its upper end, a discharge lip,

means for introducing gas at a ready-to-pour gas pressure into said receptacle at a point below normal liquid level, and of a value sufficient to establish a liquid level in said discharge passageway below said lip, said ready-to-pour pressure being equal to the sum of the resulting gas cushion pressure per square inch on the surface of liquid in said receptacle and the pressure of liquid per square inch at said below level point,

means for increasing said gas cushion pressure by a more direct route while simultaneously increasing the gas pressure at said below level point until said latter gas pressure reaches a pour pressure sufficient to cause discharge of liquid from said discharge passageway.

and means responsive to such increase in pressure, from said ready-to-pour pressure to said pour pressure at said below level point, for substantially halting further increase in gas cushion pressure via said more direct route.

3,395,834
AUTOMATICALLY CONTROLLED MIXER DISCHARGE SYSTEM
Elbert C. Troy, Highland Park, Ill., assignor to National Engineering Company, Chicago, Ill., a corporation of Delaware
Filed May 4, 1966, Ser. No. 547,610
6 Claims. (Cl. 222—63)

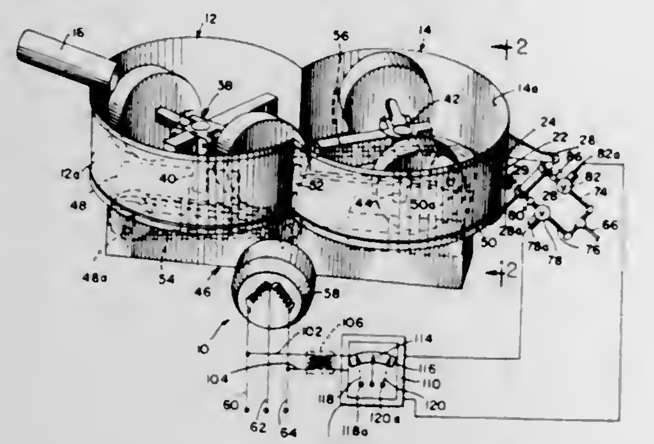

1. In combination, a mixer for conditioning bulk material and the like comprising a mixing chamber having a discharge opening, a mixing head in said chamber for mixing said material, motor means for driving said mixing head, a discharge door operatively associated with said opening for regulating the discharge of material from said chamber, said door being movable in one direction toward said discharge opening toward a closed position and in an opposite direction through an intermediate range toward an open position, fluid actuated operator means for moving said door in opposite directions, fluid conduit means for supplying fluid to opposite ends of said operator means, first and second valve means in said conduit means for directing the flow of fluid toward and away from respective opposite ends of said operator means for opening and closing said door, control means including means for measuring the power of said motor means interconnected with said first and second valve means whereby said first valve means is actuated for closing the door in response to a selected low power level and said second valve means is actuated for opening said door in response to a selected high power level, and throttle valve means in said conduit means for selectively adjusting the flow rate of fluid toward and away from the respective opposite ends of said operator means whereby the rate of opening and closing of said door is selectively controlled.

3,395,835
AUTOMATIC DISPENSING MEANS
Phil K. Tarran, 6709 Elmwood Road, San Bernardino, Calif. 92404
Filed Oct. 20, 1966, Ser. No. 588,147
1 Claim. (Cl. 222—99)

1. A dispensing container particularly adaptable for the dispensing of pasty materials comprising, in combination:

(a) an elongate tubular body, crimp-closed at one end and flexibly windable into a roll from that end under the influence of a properly directed winding force;

(b) manually operable discharge means disposed at a second end of the elongate tubular body in sealing relationship therewith and having incorporated biasing means for holding it in closed position until manually urged to an open position; and

(c) coil spring means disposed within the elongate tubular body in such cooperative association therewith as to, in its uncoiled form, induce winding of the latter into a roll from its crimp-closed end unless opposed by a sufficiently strong resisting force to prevent such inducement;

(d) all involved parts of the dispensing container being so physically characterized and mutually associated as to permit its elongate tubular body to hold a dispensable material in sufficient quantity to render said body longitudinally rigid and maintain said coil spring means in substantially uncoiled form therein, and to automatically dispense said dispensable material through said manually operable discharge means when the latter is urged to an open position;

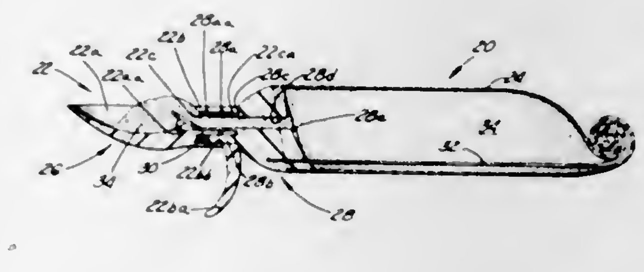

(e) the automatic dispensing of the dispensable material being effectuated by a winding of said elongate tubular body from its crimp-closed end by the coil spring means and continuing for as long as said discharge means remains open;

(f) the aforesaid manually operable discharge means comprising, in combination:

(1) plug means sealingly plugging said second end of said elongate tubular body, said plug means having a passageway for the discharge of said dispensable material from said tubular body and a forwardly extending neck;

(2) closure means characterised by an internal passageway sized to receive the forwardly extending neck of said plug means in snugly sliding relationship, said passageway being of such length as to permit longitudinally sliding movement of the closure means along said neck, said closure means being further characterized by the presence of an opening into said internal passageway forward of its entrance opening for the neck of the plug means and intended for a purpose hereinafter disclosed; and

(3) power spring means;

(4) the plug means and closure means having confronting stop means which prevent forward movement of the latter relative to the former beyond a certain point when the two are mated in the above-indicated fashion, that is, with the neck of the plug means in the internal passageway of the closure means, and said plug means having separate stop means positioned to limit backward movement of the closure means along the neck of the plug means when the plug and closure means are so mated;

(5) the aforesaid opening in said closure means being so sized and located as to expose the outer end of the passageway in said plug means and thereby permit the discharge of said dispensable material from said tubular body when the closure means is urged to its rearward position along the neck of the plug means;

(6) said closure means having internal space to accommodate the aforesaid power spring means in captivated fashion between it and said plug means, when the closure and plug means are mated in the above-indicated fashion, whereby pressure on the spring urges the closure means to its forwardmost position along the neck of said plug means;

(7) all involved elements and features of the manually operable discharge means being suitably cooperative to assure closure of the discharge means when its closure means is in the aforesaid forwardmost position on the neck of the plug means, to permit the discharge of dispensable material from said dispensing container when said closure means is urged to its rearwardmost position on the neck of said plug means, and to permit automatic return of the closure means to said forwardmost position on the neck of the plug means upon release of the force urging it to said rearwardmost position thereon;

(8) the forward portion of the aforesaid closure means being shaped like a spoon bowl and said opening in the closure means occurring in the base portion thereof, whereby the opening of said discharge means exposes the outer end of the passageway in said plug means at a convenient point for the discharge of dispensable material from the dispensing container into the spoon bowl portion of the closure means; and

(9) said closure means having an integral, downwardly depending trigger designed and oriented to permit easy rearward pulling of the closure means along the neck of the plug means for quick finger control during dispensing usage of the dispensing container.

3,395,836
COMPRESSIBLE CONTAINER
Bernhardt Stahmer, 1509 Chicago St., Omaha, Nebr. 68102
Continuation-in-part of application Ser. No. 40,296, July 1, 1960. This application May 9, 1963, Ser. No. 279,673
2 Claims. (Cl. 222—215)

1. In combination: a spout having a larger threaded inner end and a smaller outer end and an elongated hollow compressible container-dispenser having an externally threaded open neck at one end receiving said spout and the remainder of said container being closed, said threaded neck presenting a much more substantial resistance to the compression of said container than the sides of the container, means for facilitating compression to make possible the dispensing of contents when said container is partially empty, said means comprising: that portion of said container which is closest to the other end thereof having a side wall provided with longitudinally extending inwardly offset folding side wall portions on two opposite sides of said container, and said other closed end of said container also having a fold portion inwardly offset toward said outlet end and extending from one side of said container to the other and interconnected with said inwardly offset fold portions of said side wall whereby when said container is squeezed in the area of said side wall fold portions, said interconnecting fold portions will also further fold to facilitate compressibility, said folding side wall portions being elongated and tapering from larger ends nearest said other end to smaller ends nearest said outlet end, and said outlet end of said container being without equivalent offset fold portions whereby when an equal pressure is applied along said conainer said container will compress more easily at its said closed other

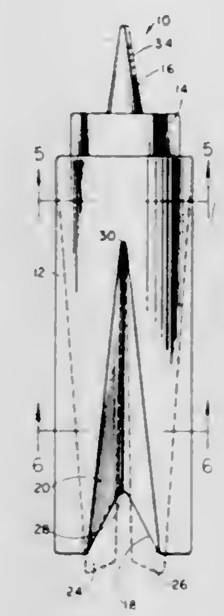

end for forcing the contents toward said outlet, said container being formed of a pliable plastic material.

3,395,837
DEVICE FOR MEASURING PULVERULENT MATERIAL
Georg Kopp, Neuhausen am Rheinfall, Switzerland, assignor to Schweizerische Industrie-Gesellschaft, Neuhausen am Rheinfall, Switzerland
Filed Jan. 3, 1966, Ser. No. 518,262
Claims priority, application Switzerland, Jan. 4, 1965, 17/65; Sept. 29, 1965, 13,434/65
7 Claims. (Cl. 222—277)

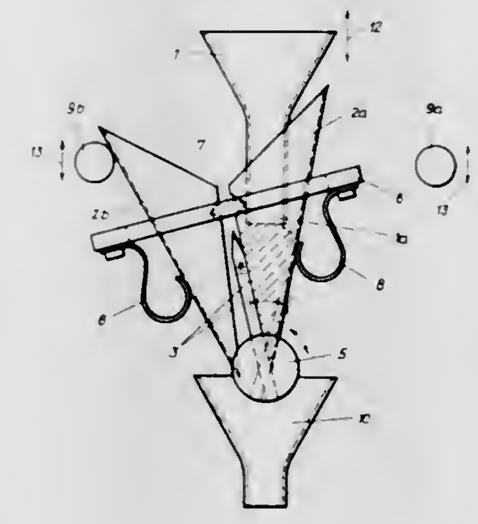

A device for measuring pulverulent material provided with at least one pair of pivotally mounted funnel-type containers which are U-shaped in cross-section whereby the open sides of the two U's face each other and are alternately closed by a common closure wall arranged between said containers. Both containers are pivotally moved, first in one direction and then in the other, to receive material from a supply and alternately engage said common closure wall to form a closed measuring cell with one of said containers, while the other container not engaging said common closure wall discharges its measured content into a funnel.

3,395,838
MANUALLY OPERABLE DISPENSER VALVE
Steven W. Beres, Trumbull, and William R. O'Donnell, Fairfield, Conn., assignors to Valve Corporation of America, Bridgeport, Conn., a corporation of Delaware
Original application Mar. 1, 1965, Ser. No. 435,965, now Patent No. 3,305,144, dated Feb. 21, 1967. Divided and this application Dec. 15, 1966, Ser. No. 601,881
11 Claims. (Cl. 222—402.14)

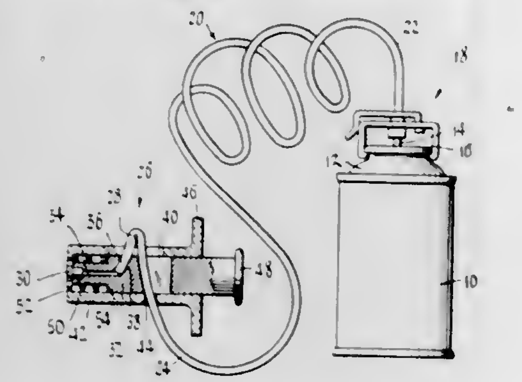

An aerosol dispenser having a flexible discharge tube of substantial length and an orifice-carrying fitting attached to the remote or free end of the flexible tube. In the orifice fitting the tube has a bend. A manually operable valve part on the fitting effects either an increased bending of the tube to shut off the flow of aerosol substance to the orifice, or else a decreased bending to permit the flow of aerosol substance to the orifice for discharge therefrom.

3,395,839
INSERT FOR EASY OPENING CAN END
Peter A. Vercillo, Chicago, Ill., assignor to Continental Can Company, Inc., New York, N.Y., a corporation of New York
Filed Aug. 15, 1966, Ser. No. 572,347
10 Claims. (Cl. 222—479)

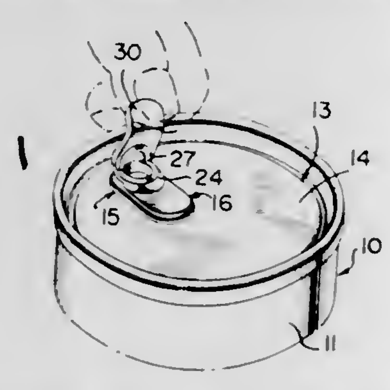

This disclosure relates to an easy opening container end having an elongated radially extending opening formed therein with the opening defined by an upstanding flange. A plastic insert is snapped into the opening, closing the same and being sealed to the can end. The insert has an upstanding projection in which there is formed a dispensing passage and a vent passage. The upper portion of the projection is removable in a manner to first uncover the vent passage to vent the can and thereafter uncover the dispensing opening. This is accomplished by means of an integral tab which overlies a base portion of the insert.

3,395,840
NOZZLE FOR A BOTTOM POUR LADLE FOR MOLTEN METAL
Weldon J. Gardner, Greentree Borough, Pa., assignor to Vesuvius Crucible Company, Swissvale, Pa., a corporation of Pennsylvania
Filed July 15, 1966, Ser. No. 565,522
4 Claims. (Cl. 222—566)

A nozzle for a bottom pour ladle for molten metal comprising a sheath with a separate core in the lower portion of the sheath and a separate seat shaped to receive and cooperate with a ladle stopper to close the nozzle in the upper portion of the sheath above the core. Interfitting means may be provided between the seat and sheath positively holding down the seat relatively to the sheath preventing lifting of the seat from the sheath due to the tendency of the seat to adhere to the ladle stopper when the stopper is lifted. The interfitting means may be

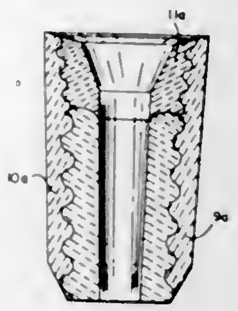

screw threads. The inside of the sheath and the outside of the core may be equally tapered downwardly and inwardly whereby the core is seated and retained in the sheath. The core may be threaded into the sheath. The sheath may be of insulating refractory material, the core of wear resistant refractory material and the seat of pyroplastic refractory material.

3,395,841
SNAP-ON TAPE DISPENSER
Paul L. Brown, 100 McAllister St., % Corps of Engineers, Room 733, San Francisco, Calif. 94102
Filed June 6, 1966, Ser. No. 555,445
5 Claims. (Cl. 225—65)

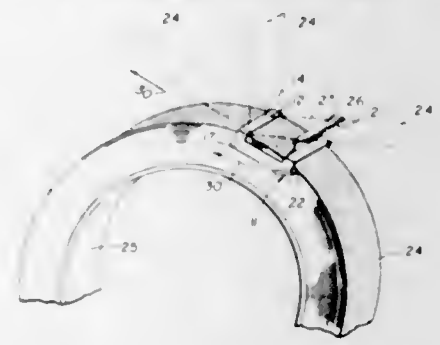

1. A snap-on tape dispenser comprising an integral structure consisting of a top having a tape passing opening therethrough, a front cross-strap on said top, a rear cross-strap on said top; said cross-straps bridging the periphery of a roll of tape to be dispensed in severed strips, a pair of sides depending from said top and engaging opposite sides of the roll of tape, an inwardly turned flange inclined downwardly and rearwardly on each of said sides adjacent to said front cross-strap and engaging the opposite sides of the roll to firmly but movably maintain the structure on the periphery of the roll, an upstanding member on said top projecting above the same, a forwardly inclined shelf on said member, and teeth on the outer end of said shelf against which portions of tape removed from the roll thereof may be pressed to sever the portions from the remainder of tape on the roll; said shelf serving to seat and to hold an area of each succeeding section of adhesive tape to be removed from the roll thereof.

3,395,842
FILM ADVANCING MECHANISM
Hans Heinen, Munich, Germany, assignor to Agfa-Gevaert Aktiengesellschaft, Leverkusen, Germany
Filed Mar. 27, 1967, Ser. No. 626,116
Claims priority, application Germany, Apr. 6, 1966, A 52,094
14 Claims. (Cl. 226—62)

A film advancing mechanism for movie cameras or projectors wherein a tooth at one end of an arm is oscillatable along a straight line in parallelism with the direction of film travel. The other end of the arm is pivotable about an axis which is reciprocable substantially at right angles to the direction of film travel under or against the bias of a prestressed leaf spring which urges the arm against a driven cam serving to oscillate and to effect in

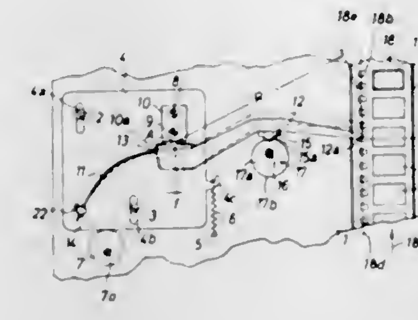

and out movements of the tooth. The deformation of the leaf spring increases in response to travel of the tooth during the pulldown portion of the cycle whereby the change in the effective length of the spring suffices to maintain the tooth in a straight path.

3,395,843
EXPLOSIVELY ACTUATED IMPACT TOOLS
Robert C. Kvavle, Hillsboro, Oreg., assignor to United Shoe Machinery Corporation, Boston, Mass., a corporation of New Jersey
Filed Feb. 23, 1966, Ser. No. 529,309
1 Claim. (Cl. 227—10)

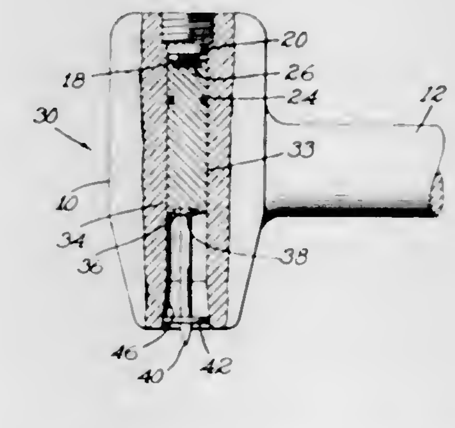

A hammer type tool using a caseless charge of explosive has a bore axially receiving a striker. When the tool is directed for impact toward a work piece, an inner end of the striker confining the charge centrally against the closed end of the bore effects impact ignition of the charge. Resultant explosive force, acting wholly in alignment with the striker, may cause a fastener to be driven into the work piece, or a forming, punching, or cutting operation may be performed.

3,395,844
PILLAR ATTACHMENT MACHINE
Howard S. Best, Raleigh, N.C., and Benjamin Titow, West Hempstead, N.Y., assignors to Corning Glass Works, Corning, N.Y., a corporation of New York
Filed Sept. 8, 1966, Ser. No. 577,884
9 Claims. (Cl. 228—1)

1. A machine for attaching a terminal to a metallic contact surface of a miniature transistor chip, the machine including: a machine base, means mounting a work table for movement on the base in x and y directions in a horizontal plane, means for driving the work table in the x and y directions, numerical control means for controlling the driving means, a transistor chip work support means adjustably attached to the work table for carrying a plurality of transistor chips, the improvements comprising, a thin metallic sheet holder on the work support for holding a metallic sheet on top of the transistor chips, a sonic bonding head supported from the machine base for movement into and out of bonding contact with the

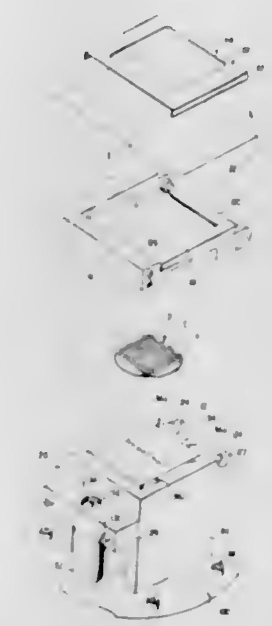

metallic sheet overlying the transistor chip, means for moving said head into and out of contact with said sheet, and electrical interlocking controls controlling the movement of the welding head, the application of welding energy to the head and the movement of the work support under the numerical control.

3,395,845
CHIP BONDING MACHINE
Howard S. Best, Raleigh, N.C., and Alfred E. Borchert, Jericho, N.Y., assignors to Corning Glass Works, Corning, N.Y., a corporation of New York
Filed Sept. 8, 1966, Ser. No. 577,944
15 Claims. (Cl. 228—1)

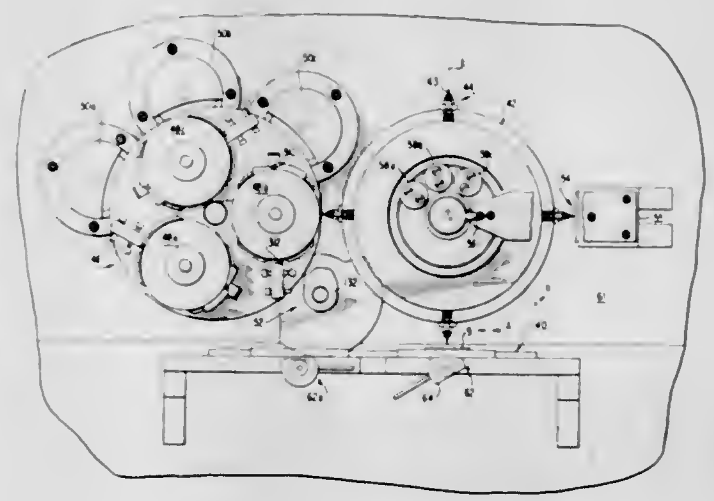

1. In a machine for automatically selecting and placing semiconductor chips or the like on a substrate, the machine of the type including, a table for supporting the substrate, a needle carrier adjacent said table, a needle carried by said carrier, the improvements comprising; the needle carrier being a rotatably indexable head carrying a plurality of said needles radially reciprocable therein,

a rotatably indexable magazine turret adjacent said indexable head, a plurality of chip magazines carried by said magazine turret, and intercontrol means for intercontrolling indexing of the head, reciprocation of the needles, and indexing of the turret to allow selection of a chip from a predetermined magazine on the turret and placing of the selected chip at a predetermined position on the substrate.

3,395,846
MACHINE FOR BENDING SHEET METAL
Louis Mille, Comines, France, assignor to Societe Francaise de Mecanique Liniere, Comines, France, a corporation of France
Filed Aug. 8, 1966, Ser. No. 570,819
Claims priority, application France, Aug. 6, 1965, 27,626
6 Claims. (Cl. 228—5)

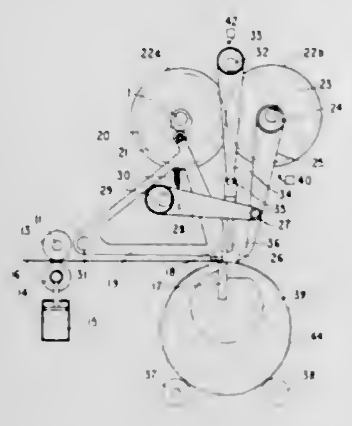

This disclosure is concerned with a machine for bending sheet metal to form a regular polygonal sleeve in which are provided a primary shaft adapted to be driven in continuous rotation, advancing means kinematically connected to and actuated by the primary shaft during a first portion of the rotation thereof whereby the sheet metal is advanced intermittently by a predetermined constant amount; gripping means connected to and actuated by the primary shaft during a second portion of the rotation thereof to grip the sheet metal after each advance; and bending means connected to and actuated by the primary shaft at least during part of the second portion of the rotation thereof whereby the bending means bends the gripped sheet metal through a predetermined constant angle.

3,395,847
SOLDERING DEVICE
Norman R. Buck, 908 Greenvale, Northfield, Minn. 55057
Filed June 27, 1966, Ser. No. 560,641
6 Claims. (Cl. 228—53)

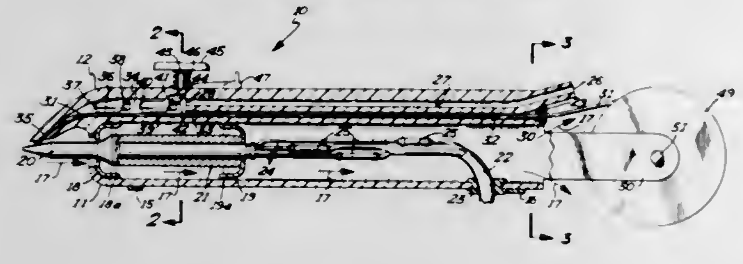

1. A soldering device adapted to solder under an inert atmosphere, said soldering device comprising
a generally tubular housing,
a soldering tip detachably mounted in said housing, said soldering tip having means heating said soldering tip operably connected thereto, the heating means adapted to be connected to a suitable power source,
a main conduit member affixed to said tubular housing, said main conduit member having an inert gas-conducting conduit, a solder wire-conducting conduit and a mixing chamber adapted to receive and communicate with the gas-conducting conduit and the solder wire-conducting conduit whereby the solder wire in the mixing chamber is surrounded by inert gas, and
nozzle means communicating with the mixing chamber of said main conduit member, said nozzle means adapted to direct solder wire and inert gas onto said soldering tip thereby providing an atmosphere of inert gas surrounding the precise point of the soldering operation.

3,395,848
POURING SPOUT CARTON
Ronald V. Johnson, Bloomington, Minn., assignor to Hoerner Waldorf Corporation, St. Paul, Minn., a corporation of Delaware
Filed Dec. 29, 1966, Ser. No. 605,658
2 Claims. (Cl. 229—17)

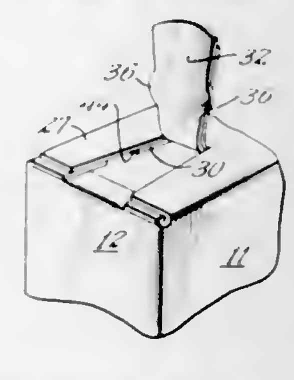

1. A reclosable pour spout carton including a rectangular tubular body including side and end walls, and closure flaps secured to said walls and including an end wall closure flap hinged to an end wall, and side closure flaps secured to said side walls, said side wall closure flaps overlying said end closure flap and being secured in face contact, a pair of substantially registering tabs formed in the end edges of said side wall closure flaps overlying said end wall closure flaps and hinged to the side wall closure flaps along registering fold lines parallel to said end edges, side edges of said tabs extending from the ends of said registering fold lines to said end edges of said side wall closure flaps and spaced from the outer edges thereof, and a pair of ears projecting laterally from the side edges of the lowermost of said tabs extending beneath portions of the uppermost side wall closure flaps on opposite sides of the uppermost of said tabs, said ears being defined by outwardly curved cut lines which terminate substantially at the side edges of the tabs.

3,395,849
SLIDING TRAY PACKAGES
Edward D. Gillam, Penn Valley, Pa., assignor to Comly-Gillam Carton Corporation, Philadelphia, Pa., a corporation of Pennsylvania
Filed May 11, 1966, Ser. No. 549,341
9 Claims. (Cl. 229—19)

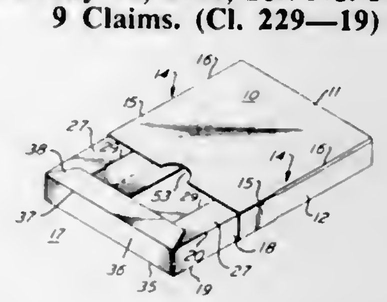

A package having an outer receptacle in the form of a sleeve with creases along the edge portions, the creases having longitudinally elongated gripping portions extending inwardly and engaging side margins of an inner receptacle. The inner receptacle optionally has a tray with a bottom wall and framing portions with opposite pairs of side wall portions hinged to the bottom wall, the framing portions being movable from flat positions to assembled positions with slitted portions in top wall panels and inner side wall panels into which ends of side wall panels are vertically slidable for assembly and retention.

3,395,850
CONTAINERS WITH INTEGRAL, INTERLOCKING CORNERS AND COVERS
Joseph L. Kotowick, Richmond, British Columbia, Canada (% Crown Zellerbach Corp., 1 Bush St., San Francisco, Calif. 94104)
Filed Feb. 23, 1966, Ser. No. 529,577
17 Claims. (Cl. 229—36)

A paperboard container including a bottom wall having side and end walls foldably connected thereto along its margins. Triangular locking flaps are foldably connected to the end walls at their end margins and they abut against the inwardly presented surfaces of the side walls. Similarly connected to the side walls are side flaps which abut against the outwardly presented surfaces of the end walls. Side facing elements are foldably connected to the side flaps and they not only abut against the inner faces of the end walls, but also engage the locking flaps at the end margins of the end walls and prevent the side walls from folding outwardly. Interposed between the side flaps and side facing elements are top rim panels which are located above the upper margins of end walls. Top flaps are foldably connected to the side wall panels, and they are provided along their opposite margins with foldable opening flaps. Locking ears are mounted on the opening flaps and these ears fit between the side flaps and end wall panels directly beneath the top rim panels.

3,395,851
MULTIPLE POCKET ENVELOPE
Robert D. Allison, West Hartford, Conn., assignor to United States Envelope Company, Springfield, Mass., a corporation of Maine
Filed July 3, 1967, Ser. No. 650,897
4 Claims. (Cl. 229—72)

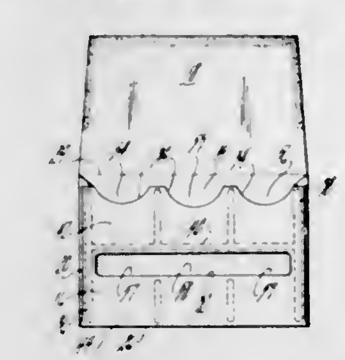

This disclosure is of a multiple pocket envelope made from a unitary blank including a front panel, side flaps folded against the front panel and a rear panel folded against the front panel and adhesively joined to the side flaps and having a slotted window opening therethrough. A horizontal adhesive strip extending generally from one side flap to the other joins the front and rear panels and divides them into upper and lower sections which cooperate to form at least two pockets, the lower pocket being accessible through a window or slot cut in the rear panel lower section. A closure panel or flap serves as a closure for both pockets. Optionally, additional vertical adhesive strips may be provided to join the front and rear panel sections along vertical lines to form a number of smaller pockets.

3,395,852
CLOSURE MEANS FOR WRAPPED PACKAGES
Donald S. Koncak, 703 Winona St., Northfield, Minn. 55057
Filed Sept. 5, 1967, Ser. No. 665,339
2 Claims. (Cl. 229—87)

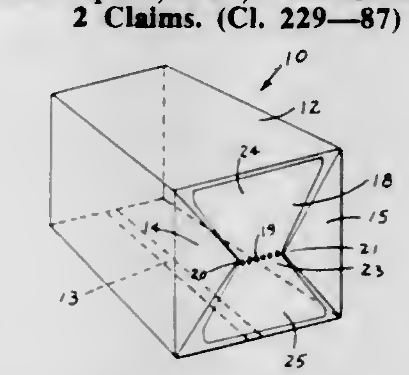

The folded-in parts of a thin, pliant wrapper at the ends of a package are held in place by an adhesively attached area of thin bendable metal which, after opening the package, serves to re-close it by folding the wrapper and overlying area of thin metal.

3,395,853
VORTEX COMPRESSOR
Gunther Zoehfeld, West Hurley, N.Y., assignor to Rotron Manufacturing Company, Inc., Woodstock, N.Y., a corporation of New York
Filed Dec. 29, 1965, Ser. No. 517,288
5 Claims. (Cl. 230—22)

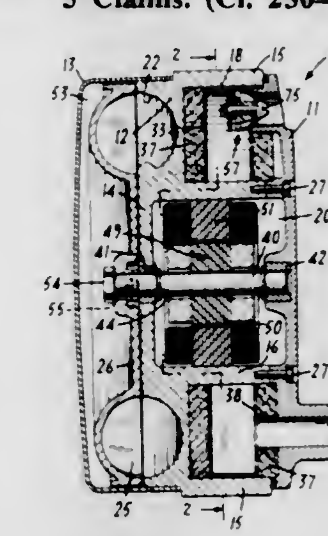

This improvement in vortex compressors provides means for regulating the output pressure of such devices while maintaining rotor operation at its optimum and most efficient speed through the utilization of a bleed valve communicating between the interior of the compressor and the atmosphere. Several forms of bleed valves are described.

3,395,854
COMPRESSOR
Cecil G. Martin, Cleveland, and William Edward Bartley III, Chagrin Falls, Ohio, assignors to Energy Technology, Inc., Cleveland, Ohio
Filed June 10, 1965, Ser. No. 462,960
33 Claims. (Cl. 230—75)

A compressor having a rotatable outer casing that carries a liquid ring and a rotatable wheel having peripheral

cavities and eccentrically located within the casing, to be partially immersed in the liquid ring. The casing and liquid ring are rotated at a faster peripheral speed than the wheel and gas is compressed in the wheel cavities by

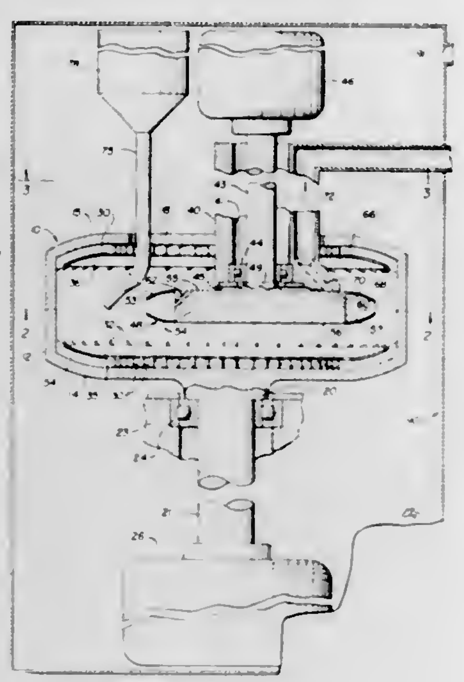

utilizing kinetic energy of the moving liquid. The wheel cavities are shaped to effectively utilize the kinetic energy of the ring and convert it to static pressure.

3,395,855
AIR COMPRESSOR SYSTEM EMPLOYING RECIRCULATING MEANS
Richard B. Clark, Washington, Ill., assignor to Caterpillar Tractor Co., Peoria, Ill., a corporation of California
Filed Nov. 7, 1966, Ser. No. 592,665
7 Claims. (Cl. 230—22)

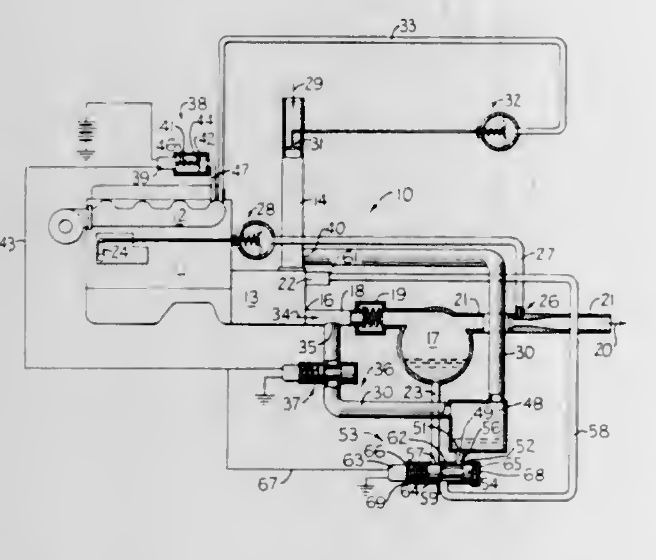

An air compressor system having an engine driven compressor for supplying a receiver, the engine normally operating at idling speeds and accelerating to compressing speeds in response to external demand for air from the receiver. A bypass between the compressor outlet and inlet to permit the free passage of air from the compressor when the engine is idling and substantially eliminating pressure against which the compressor operates so that engine response to external air demands is increased. Means for transferring lubricant from either the receiver or bypass so that lubricant is continuously supplied to the compressor lubricant pump and the receiver remains isolated from the bypass.

3,395,856
AIR COMPRESSOR OIL CONTROL SYSTEM
Richard B. Clark, Washington, Ill., assignor to Caterpillar Tractor Co., Peoria, Ill., a corporation of California
Filed Dec. 30, 1966, Ser. No. 606,191
6 Claims. (Cl. 230—206)

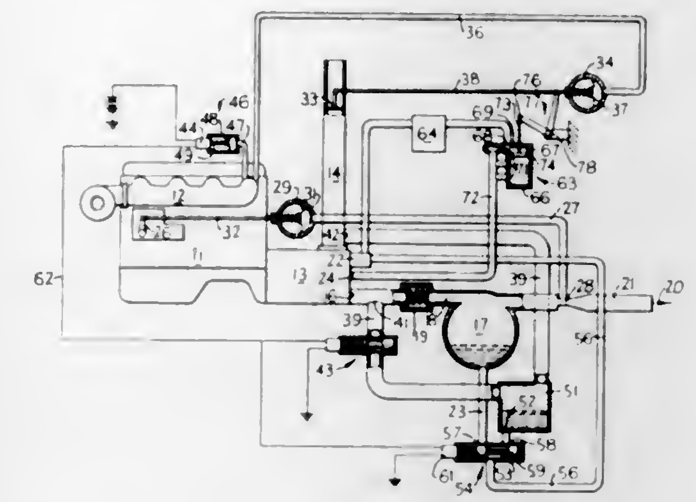

To decrease compressor loading on the engine during operation at idling speed and thus increase the rapidity of engine response to external air demands, means selectively regulate the flow of lubricant into the internally lubricated compressor. Control means operate said lubricant flow regulator means in response to variations in compressor speed.

3,395,857
BEARING ASSEMBLY
James Alexander Petrie, Derby, and George Pask, Nottingham, England, assignors to Rolls-Royce Limited, Derby, England, a British company
Filed Jan. 25, 1967, Ser. No. 611,679
Claims priority, application Great Britain, Feb. 15, 1966, 6,693/66
7 Claims. (Cl. 230—116)

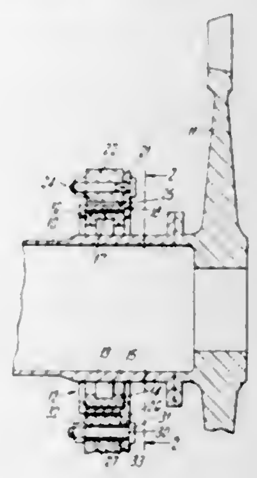

A housing, within which a bearing is mounted and from which it is spaced, is itself mounted in an opening in fixed structure. Bolts normally positively locate the housing within the opening, but they permit movement of the housing within the opening, when the housing is caused to move within the opening as a result of being subjected to a force exceeding a predetermined value.

3,395,858
ONE-PIECE RESILIENT COMPRESSOR VALVE
John R. Spencer and Walton D. Greathouse, Houston, Tex., assignors to Continental Oil Company, Ponca City, Okla., a corporation of Delaware
Filed Sept. 21, 1964, Ser. No. 397,706
11 Claims. (Cl. 230—231)

This invention comprises a valve having a one-piece resilient and elastic, non-metallic valve member which is

disposed between upstream and downstream support members. The valve member and support members are provided with aligned flow apertures and passageways, re-

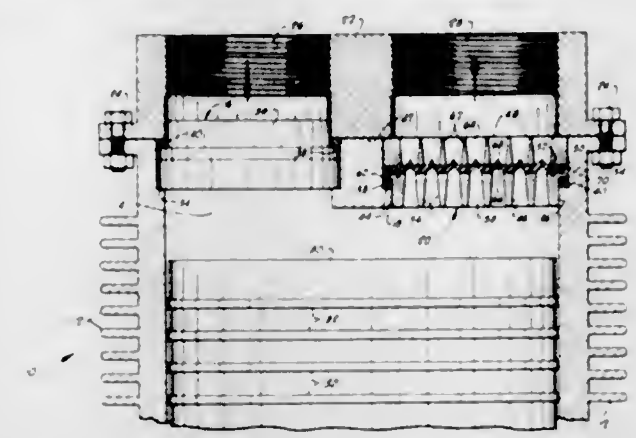

spectively, so that the fluid flowing through the valve does not change directions.

3,395,859
GARBAGE AND REFUSE COLLECTING AND DISPOSAL MEANS
Jacob T. Menges, El Paso, Tex., assignor of twenty-four and one-half percent to Joe C. Yarborough and twenty-four and one-half percent to Joseph C. Holcomb, both of El Paso, Tex.
Filed Nov. 6, 1964, Ser. No. 409,436
3 Claims. (Cl. 232—43.2)

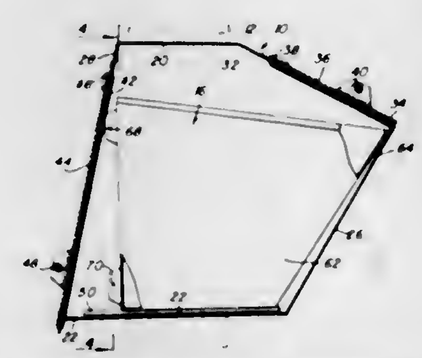

1. A refuse disposal assembly adapted to be mounted in a wall structure comprising, an enclosure extending through said wall structure having access openings on opposite sides of the wall structure, said enclosure including upper and lower wall portions converging toward an edge portion spaced from the wall structure on one side thereof, a bottom wall portion connected to the lower wall portion and side wall portions interconnecting the upper, lower and bottom wall portions, receptacle means slidably mounted on the bottom wall portion of the enclosure for removal therefrom through only one of said access openings on the other side of the wall structure from a position abutting said edge portion, closure means connected to the enclosure closing said one of the access openings and holding the receptacle means in abutment with said edge portion below the other of the access openings formed in the upper wall portion, said receptacle means including an open top exposed to said other of the access openings.

3,395,860
APPARATUS FOR EFFECTING SEQUENTIAL OPERATION OF THE KEYS OF A TAPE PERFORATING MACHINE
Claire N. Brewer, Indianapolis, Ind., assignor to International Typographical Union of North America, Colorado Springs, Colo.
Filed June 23, 1966, Ser. No. 559,769
1 Claim. (Cl. 234—15)

A machine for operating the keys of a tape perforating machine in any one of a number of pre-determined sequences to produce automatically the tape perforations for any of a number of different words or names. A solenoid is provided to operate each key of the tape perforating machine and the windings thereof are connected respectively to the leads of a first group which extend across a battery of circuit boards. A rotory switch is provided and the fixed contacts thereof are connected respectively to the leads of a second group which also extend across the battery of boards. A plurality of boards are included in the battery and each has contacts which engage all the leads of the two groups when the board is activated. Only certain contacts of each board are connected, the connections

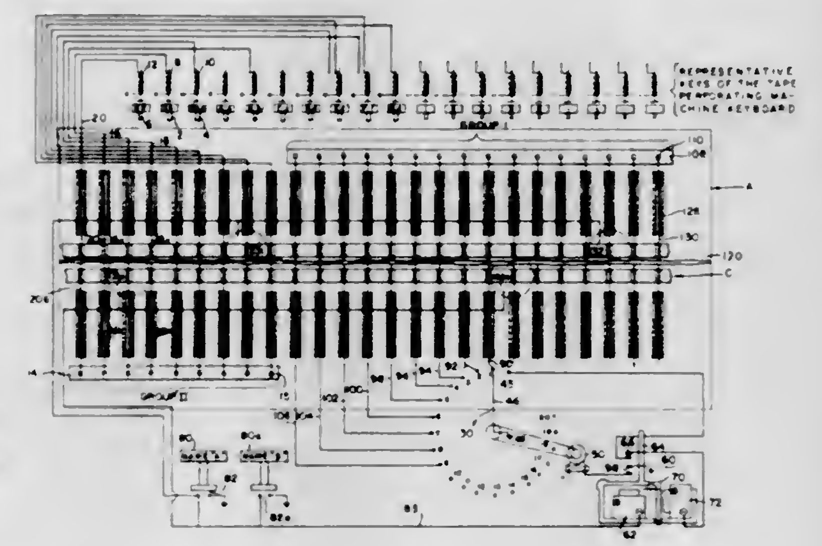

being such that upon activation of a board and operation of the rotary contact of the switch selected leads of the second group are connected in pre-determined sequence to selected leads of the first group in order to operate the key-operating solenoids in the sequence of the contacts of the rotary switch. An operating key is provided for each selected name or word and upon depression of any such key the rotary switch is operated and the corresponding board is moved to place its contacts in engagement with the leads of the two groups.

3,395,861
SLOT CAR TRACK
William B. Kindred, 14659 Horger St., Allen Park, Mich. 48101
Filed Aug. 18, 1966, Ser. No. 573,343
16 Claims. (Cl. 238—10)

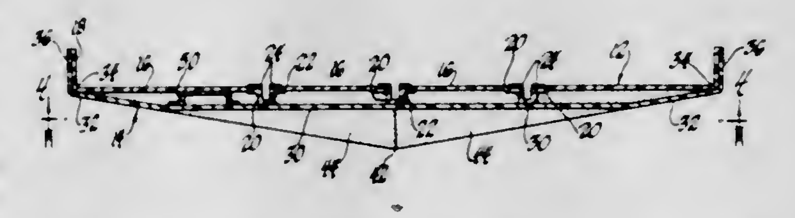

An improved slot car track assembly and, more specifically, such an assembly including a plurality of track sections abutting one another in end-to-end relationship and a plurality of support sections abutting one another in end-to-end relationship with the track sections being disposed in engagement with the support sections thereby providing a track of unique and sturdy construction.

3,395,862
TRACTION MEANS FOR VEHICLE WHEELS
Herbert John Lundberg, 175 Van Nostrand Ave., Jersey City, N.J. 07305
Filed July 18, 1966, Ser. No. 566,447
3 Claims. (Cl. 238—14)

A vehicle wheel traction device which has a body of rigid material with a curved portion and a flat portion

rigidly connected to each other. A top surface of the body is roughened while a bottom surface of the body is

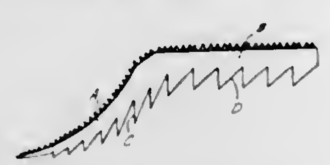

provided with ridge shaped teeth for gripping into the surface on which said wheel travels.

3,395,863
FUEL FEED ARRANGEMENT FOR OIL BURNERS
Terence L. Johnson, Bridgewater, N.J., assignor to Automatic Switch Company, a corporation of New Jersey
Filed Sept. 29, 1966, Ser. No. 582,999
10 Claims. (Cl. 239—125)

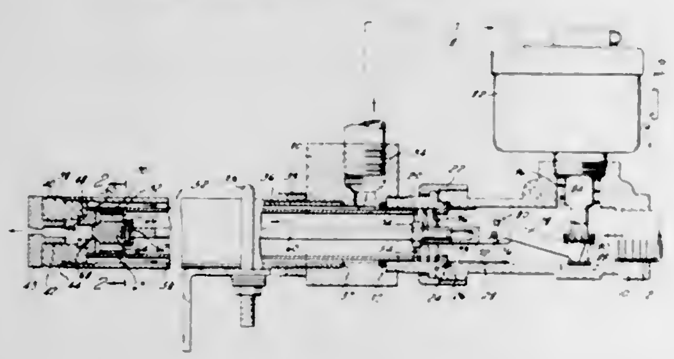

Oil burner assembly includes feed conduit for conducting fuel to combustion chamber, and outer tube concentric therewith defining annular fuel recirculating passage. Valve at discharge end of feed conduit arranged to alternatively (a) allow fuel flow to combustion chamber and prevent flow to recirculating passage, or (b) allow recirculation and prevent flow to chamber. Electric actuator spaced from combustion chamber operates valve via a rod extending longitudinally through feed conduit.

3,395,864
FASTENING ASSEMBLIES
Hans G. Küster, Factoria, Krugersdorp, Transvaal, Republic of South Africa, assignor to Rubber and Wheel Industries (Proprietary) Limited, Factoria, Krugersdorp, Transvaal, Republic of South Africa
Filed June 28, 1965, Ser. No. 467,330
Claims priority, application Republic of South Africa, July 15, 1964, 64/3,332
12 Claims. (Cl. 238—310)

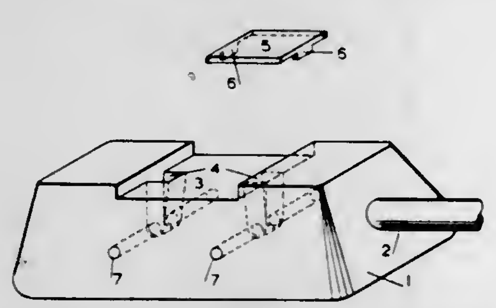

1. A fastening assembly comprising a base and a clip, a clamping head extending laterally from the clip, a bearing face on said clamping head, an elastomeric element interposed between and bonded to the base and clip, said elastomeric element extending in a direction at approximately right angles to the surface of said bearing face and being deformable under shear stress to allow limited and parallel displacement of the clip relative to the base, and anchoring means embodied in the base to hold the latter in a displaced position relative to the clip.

3,395,865
METHOD OF AND APPARATUS FOR NEUTRALIZING STATIC ELECTRICITY ON FILLING PICKS OF LOOMS AND THE LIKE
Allen G. McKinnon, Asheboro, N.C., assignor to Burlington Industries, Inc., Greensboro, N.C., a corporation of Delaware
Filed July 7, 1966, Ser. No. 563,557
10 Claims. (Cl. 139—196)

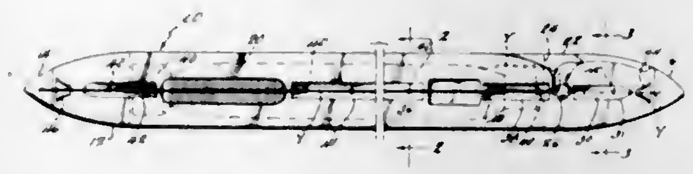

1. A loom shuttle having an elongated body member with a first opening therein for accommodating a filling carrier and a second opening for receiving a shuttle eye for delivering yarn to a side delivery opening in the body, the improvement comprising: a first static electricity eliminating means comprised of a radio-isotope material emitting alpha rays positioned forward of said side delivery opening and carried on said body; and a second static electricity eliminating means comprised of a radio-isotope material emitting alpha rays positioned rearwardly of said side delivery opening on said body member whereby yarn leaving said shuttle on each pick is neutralized of any charge set up therein while traveling through the eye.

10. A method of weaving fabric on a loom utilizing shuttles for laying in the filling yarn between a shed formed by the warp yarn comprising the steps of ionizing the air by means of a radioactive isotope material within the shed and passing the filling yarn through the ionized air as the filling yarn is fed from the shuttle whereby static electricity on the filling yarn is neutralized.

3,395,866
MATERIAL SPREADERS HAVING REMOTE CONTROLS
Eugene A. Sousek and Wilmer E. Witt, Appleton, Wis., assignors to Fox River Tractor Company, Appleton, Wis., a corporation of Wisconsin
Filed Mar. 28, 1966, Ser. No. 537,996
6 Claims. (Cl. 239—670)

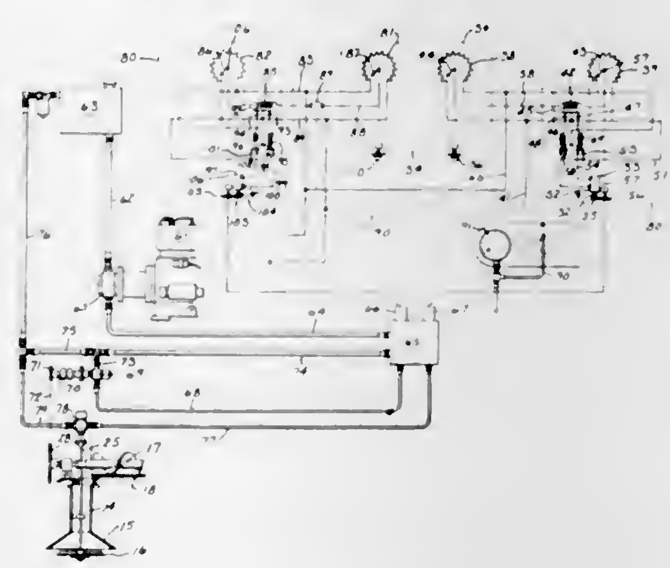

1. In a vehicle having an operator's station, a first motor for propelling said vehicle, an auxiliary driven device on said vehicle, auxiliary motor means on said vehicle remote from the operator's station for driving said auxiliary driven device, a speed control for said auxiliary motor means, a reversible electric control motor, mechanical means between said electric control motor and the

speed control for said auxiliary motor means for controlling the operation of the latter and hence the operation of said auxiliary device in accordance with the operation of said electric control motor, a first electric circuit for said electric control motor, a reversing switch in said first circuit, an electric bridge circuit, a master variable resistance means with a movable wiper in said bridge circuit and located in the operator's station, a slave variable resistance means in said bridge circuit and having its resistance in parallel with the resistance of said master means and having a movable wiper, conducting means including a discriminating relay electrically connecting said wipers, electric means between said discriminating relay and the reversing switch in said first electric circuit for causing operation of said electric control motor in a selected direction in accordance with the action of said discriminating relay when the bridge circuit is unbalanced due to a change in the position of the wiper of the master variable resistance means, and means between said electric control motor and wiper of the slave variable resistance means for changing the position of the latter to bring the control circuit back into balance whereby movement of the wiper of the master variable resistance means will control the operation of the speed control for the auxiliary motor means, there being a variable signal sender which is responsive to the ground speed of the vehicle in series with the discriminating relay.

3,395,867
FRACTIONAL CRYSTALLIZATION
William C. McCarthy and Francis M. Brinkmeyer, Bartlesville, Okla., assignors to Phillips Petroleum Company, a corporation of Delaware
Filed June 21, 1963, Ser. No. 289,629
11 Claims. (Cl. 241—38)

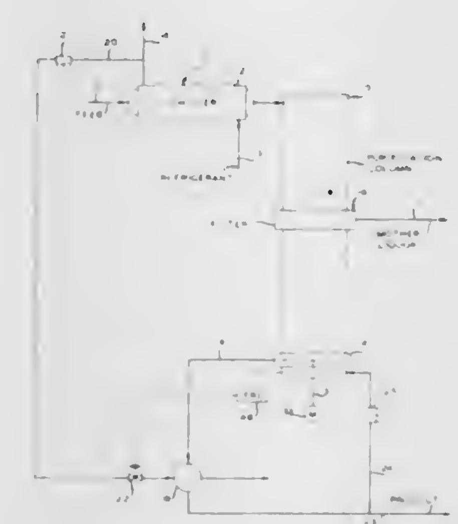

1. Crystal purification apparatus comprising:
(a) a column adapted to receive a crystal mass at one end,
(b) a cutter assembly positioned adjacent the second end of said column, said cutter assembly including
(1) first and second plates mounted in spaced relationship with one another, said plates being positioned within said column so as to be free to rotate about an axis which extends longitudinally of the column and which is perpendicular to the planes of the plates, said first plate being positioned between said second plate and said one end of said column, and
(2) a crystal cutting means secured to the surface of said first plate which faces said one end of said column,
(c) means forming an outlet in said column adjacent the region between said plates, and
(d) means to rotate said first plate at a first velocity and means to rotate said second plate at a second velocity which is greater than said first velocity.

3,395,868
ROLLER MILL
Joe W. Dodgen, Kenneth R. Johnson, and Merton D. Snapp, Humboldt, Iowa, assignors to Dodgen Industries, Inc., Humboldt, Iowa, a corporation of Iowa
Original application Nov. 20, 1963, Ser. No. 325,117, now Patent No. 3,194,288, dated July 13, 1965. Divided and this application May 3, 1965, Ser. No. 452,687
3 Claims. (Cl. 241—86)

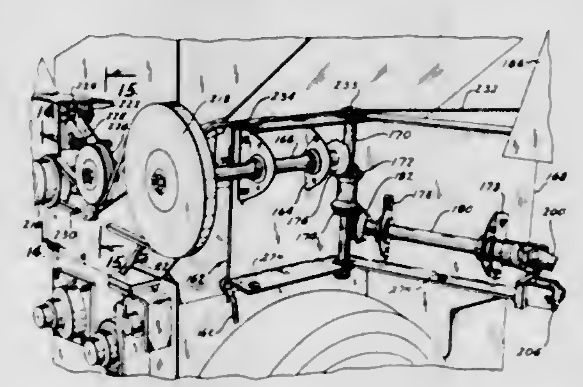

A roller mill having a power transmission assembly including a pair of channel members in registering nesting end to end engagement and pivotally interconnected by a vertical shaft having a pair of gears thereon in engagement with longitudinally extending horizontal shafts carried by the channel members. A rotor in a grinding compartment may be connected to one of the horizontal shafts for driving a conveyor connected to the other of said horizontal shafts.

3,395,869
STRUCTURE FOR LARGE DIAMETER GRINDING MILL
Thomas E. Harris, Valois, Quebec, Canada, assignor to Dominion Engineering Works, Ltd., Montreal, Quebec, Canada
Filed Feb. 25, 1965, Ser. No. 435,228
5 Claims. (Cl. 241—176)

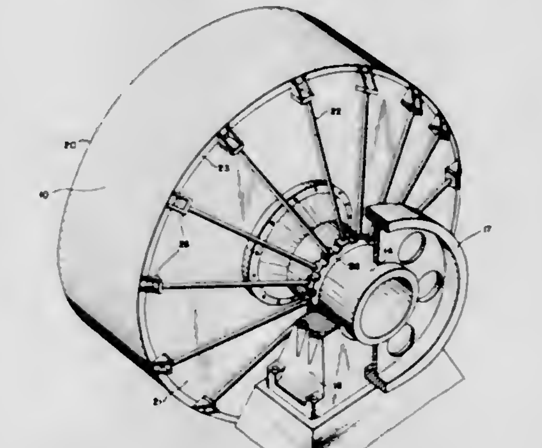

An improved drum structure for a rotary grinding mill includes spoke-like load transfer members external to the drum connecting the drum outer peripheral edges with the mill trunnions substantially independently of the drum heads, to reduce working stresses on the heads.

3,395,870
AUTOMATIC TAPE WIND UP MEANS
Stephen R. Klinger, Los Angeles, Calif., assignor to The National Cash Register Company, Dayton, Ohio, a corporation of Maryland
Filed June 16, 1966, Ser. No. 558,068
10 Claims. (Cl. 242—55.11)

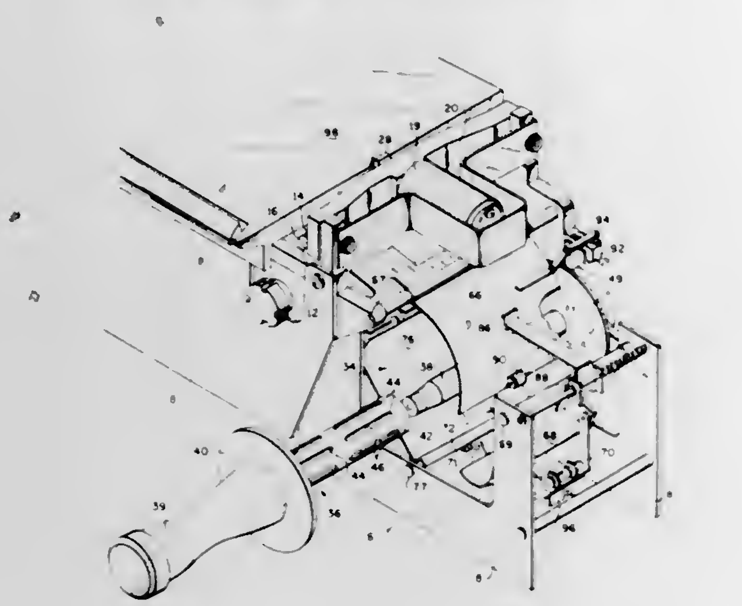

An apparatus for automatically starting the winding of a tape onto a rotating take-up spool. Guide members guide the tape toward and against the friction gripping surface of the hub of the spool. Pressure is applied to the guide members which extend at least partially around the hub to induce a friction gripping of the hub to the tape whereby the tape is wound around the spool. The pressure is automatically released from the guide members responsive to the increased thickness of several windings around the hub.

3,395,871
CARTRIDGE RECEIVING MEANS FOR A TAPE RECORDER
Karl Ackermann and Klaus Paape, Berlin, Germany, assignors to Robert Bosch Elektronik und Photokino G.m.b.H., Berlin-Wilmersdorf, Germany
Filed May 24, 1966, Ser. No. 552,505
Claims priority, application Germany, July 3, 1965, B 82,676
8 Claims. (Cl. 242—55.13)

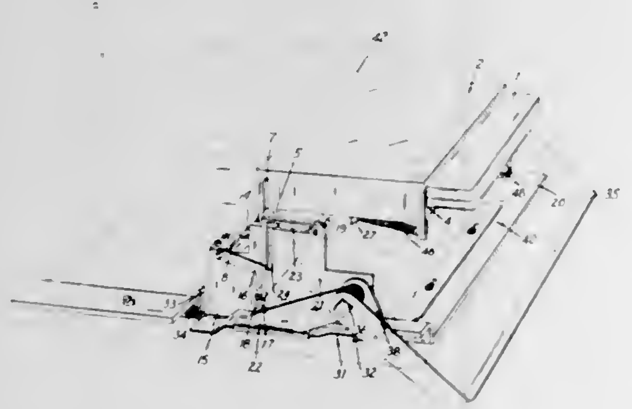

A tape recorder for use in motor vehicles which is adapted to receive tape cartridges which the driver can easily exchange without moving from his seat. The tape recorder includes a housing and driving means for a tape cartridge. A tape cartridge receiving means is provided in the housing. The receiving means can be raised from a basic operating position to a non-operating position by means of a lever actuated from outside thereof. An ejector means within the receiving means then pushes the tape cartridge a small distance out of the receiving means thereby allowing it to be easily removed. When a tape cartridge is inserted into the receiving means, the movement of the cartridge against the ejector means causes the receiving means to be automatically lowered to the basic operating position by the pull of a spring provided for this purpose.

3,395,872
REEL WITH RADIAL STRESS ABSORBER
Lazzaro A. Fattori, 84 Rose Ave., Woodcliff Lake, N.J. 07675
Filed Oct. 20, 1965, Ser. No. 498,745
6 Claims. (Cl. 242—71.8)

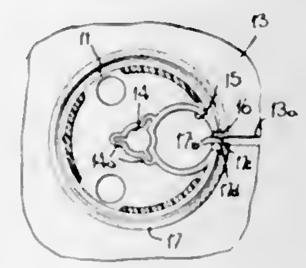

1. A warp resistant reel for receiving tightly wound tape having a hub supporting a pair of opposite spaced flanges, a normally open split ring floating between said flanges and concentric with said hub, said ring being constructed and arranged to close when wound with tape and when closed and fully loaded with tape to be radially concentrically spaced from said hub forming a carrier for said tape independent of said hub and flange.

3,395,873
LOCKING MECHANISM
Kenneth William Norris, Burrell Road, Haywards Heath, England
Filed Oct. 20, 1966, Ser. No. 588,178
Claims priority, application Great Britain, Oct. 20, 1965, 44,368/65
2 Claims. (Cl. 242—107.4)

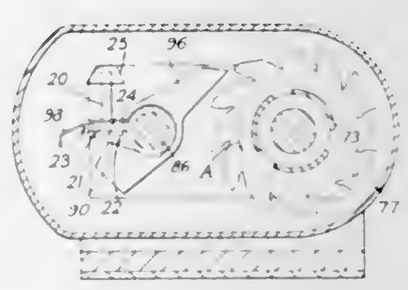

A locking device for safety belts is made up of a frame with two spaced parallel shafts mounted therein. The shaft receiving the belt has ratchet teeth, and a pawl rotates on the other shaft. An inertia-sensitive device supported by the said other shaft operates the pawl means into engagement with the ratchet teeth. The inertia-sensitive device consists of a substantally vertical element having a free upper end and means integral with the lower end operatively contacting the pawl.

3,395,874
ACCELEROMETRIC AUTOMATIC PILOT FOR MISSILES
Lanfranco Bartoli and Claudio Fondi, Rome, Italy, assignors to Contraves Italiana S.p.A., Rome, Italy
Filed July 21, 1966, Ser. No. 566,908
Claims priority, application Italy, July 31, 1965 17,443/65
1 Claim. (Cl. 244—3.2)

A missile pitch control using acceleration measuring devices strategically located in the front and rear sections

of the missile, the pitch being a function of the difference

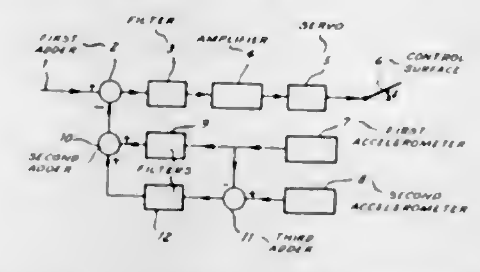

in the signals produced by the aforesaid strategically located devices.

3,395,875
WIRELESS WINGTIP LIGHTS FOR ROTARY WING AIRCRAFT
Daniel R. Donovan, 70C Freemont St., Bloomfield, N.J. 07003
Filed Oct. 22, 1965, Ser. No. 502,267
1 Claim. (Cl. 244—17.11)

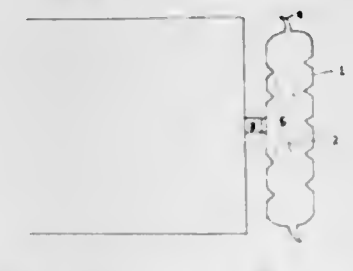

A radiant energy light source adapted to be mounted on the tips of a rotary wing aircraft by a rotary mounting means, said light source comprising a hermetically sealed envelope having its walls coated with phosphor, containing a mixture of inert gas and mercury, the envelope having a plurality of projections on the inside wall and extending into the interior of the envelope and a plurality of blades formed on the envelope to enable the envelope to be rotated by air currents to agitate the mixture of gas and mercury to cause static charges which ionize the gas to produce visible light.

3,395,876
AIRCRAFT WITH HOUSED COUNTER ROTATING PROPELLORS
Jacob B. Green, 1419 Monte Sano Blvd. SE., Huntsville, Ala. 35801
Filed May 5, 1966, Ser. No. 547,905
1 Claim. (Cl. 244—23)

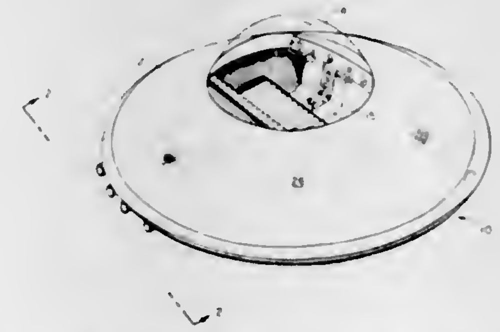

An aircraft capable of vertical lift having a pair of counter-rotating lift blade assemblies wherein blade pitch can be controlled to control the attitude of the aircraft.

3,395,877
AERODYNAMIC SITE MARKER BALLOON
John A. MacFadden and Raymond J. Buresch, Northfield, Minn., assignors to G. T. Schjeldahl Company, Northfield, Minn., a corporation of Minnesota
Filed Sept. 26, 1966, Ser. No. 582,059
8 Claims. (Cl. 244—33)

A lighter than air inflatable structure comprising an aerodynamically shaped envelope having a nose portion, a tail portion and a body portion disposed intermediately thereof, the envelope having stabilizer means secured to the tail portion and comprising an air inflatable duct having an axis disposed and spaced in generally parallel

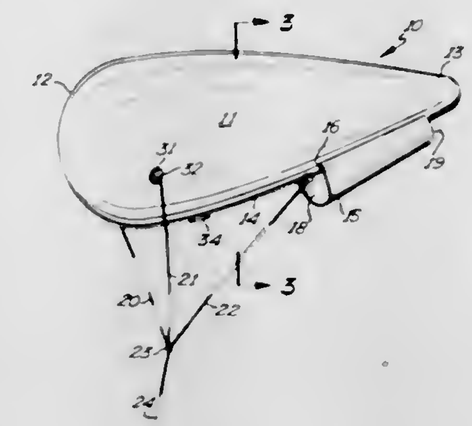

relationship to the axis of the envelope, the duct having a forwardly disposed intake and a rearwardly disposed restricted discharge opening, the envelope being provided with tether line means for tethering the envelope to an anchor point.

3,395,878
FEEL SIMULATORS
Roy Westbury, Bridgnorth, England, assignor to H. M. Hobson Limited, London, England, a company of Great Britain
Filed Nov. 8, 1967, Ser. No. 681,460
Claims priority, application Great Britain, Nov. 18, 1966, 51,700/66
6 Claims. (Cl. 244—83)

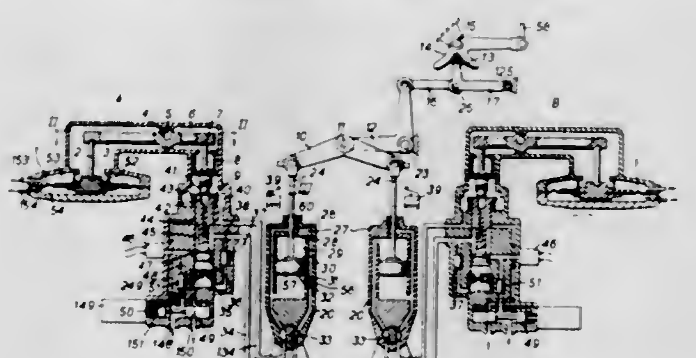

A duplicated feel simulator for aircraft which includes two hydraulic feel units, each comprising a hydraulic jack coupled to a pilot's input member and arranged to displace fluid against an opposing resistance which increases with displacement of the input member from a neutral resistance and also with increase in airspeed, the jacks being coupled to the input member through a differential link and two switches being provided which are respectively actuated by swinging of the differential link in one or the other direction as the result of an excessive discrepancy between the positions of the jacks arising from failure of one of the units to afford to the pilot an indication of which unit has failed.

3,395,879
AIRCRAFT LANDING GEAR
Robert Bayliff, Wassenaar, Netherlands, and Walter J. Le Blanc, Troy, and James Sidles, West Richfield, Ohio, assignors to The B. F. Goodrich Company, New York, N.Y., a corporation of New York
Filed Sept. 29, 1966, Ser. No. 583,027
19 Claims. (Cl. 244—108)

A landing gear for aircraft, particularly helicopters, has ground support wheels in the form of rotary wire brushes of the type in which the brush spindle is parallel with the

brush bristles. These brush-type wheels are mounted for free rotation at the lower end of the landing gear strut on a linkage which permits the rotational axis of each brush type wheel to be tilted laterally of the aircraft to thereby change the number of bristle tips available for ground contact. By so altering the position of these brush-wheels, their rolling resistance may be appreciably varied, and braking effects may be achieved by tilting the brushes to a position in which practically all of their bristles are engaged with the ground. These brush-wheels are arranged

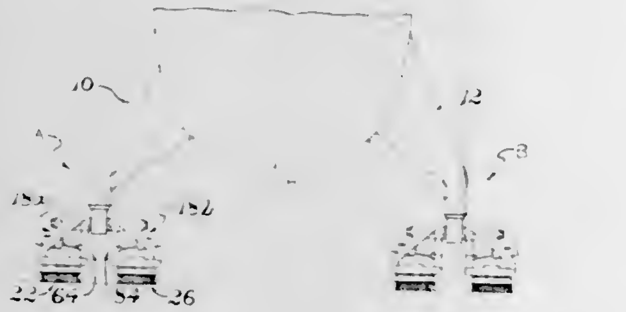

in groups at the bottom of each strut and each group is supported for pivotal movement in a direction fore and aft of the aircraft. This gear is quite insensitive to temperature changes and is useful for very cold weather operations or on vehicles having very high landing speeds. Moreover, the frictional engagement of this form of wheel with the ground makes the gear particularly stable and skid-resistant when an aircraft is operated on ice or wet slippery surfaces.

3,395,880
METHOD FOR WINCH-CONTROLLED PARACHUTE DELIVERY FROM AIRCRAFT
James J. Mulquin, 5101 Brentford Drive, Rockville, Md. 20853
Filed Aug. 31, 1966, Ser. No. 576,805
2 Claims. (Cl. 244—137)

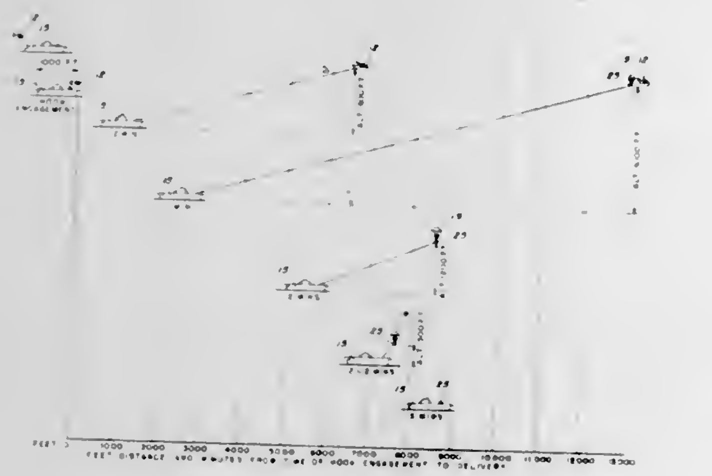

A method of delivering cargo from planes where a ground line picked up by the plane is attached to the cargo and is reeled in to guide the parachute supported cargo to its destination.

3,395,881
PARACHUTE PROTECTED AIRCRAFT
Odell C. Markham, 247 Colorado Ave., Bridgeport, Conn. 06605, and Alan C. Ferguson, Perry Ave., Norwalk, Conn. 06850
Filed Feb. 16, 1967, Ser. No. 616,672
13 Claims. (Cl. 244—139)

A parachute-protected aircraft having a framework comprising fuselage and wings, and an outboard parachute anchored at a top portion of the framework adjacent the center of gravity of the aircraft. The parachute is secured to the aircraft by an anchorage or base member tethered

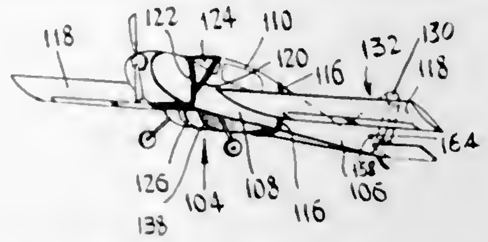

to the parachute and overlying the framework and by attachable fastener devices engaging the base member and adapted to be secured to the framework.

3,395,882
INTRAVENOUS INFUSION BOTTLE HOLDER
Louise A. Marshall, San Antonio, Tex., assignor to the United States of America as represented by the Secretary of the Air Force
Filed Sept. 19, 1966, Ser. No. 580,548
1 Claim. (Cl. 248—318)

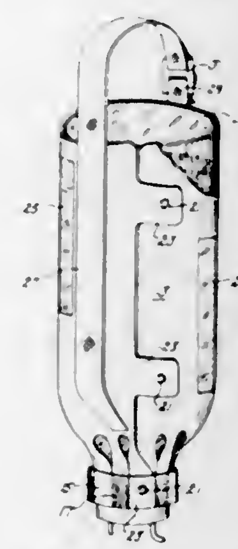

A holder for retaining a container of intravenous fluid in position during the infusion process including a fabric body portion having snap fasteners attached thereto forming a substantially cylindrical configuration with an elasticized neck portion. A strap is attached to the holder for supporting the bottle in the inverted position and horizontally spaced vertically staggered elongated clear plastic windows are provided in the body portion to show the nature and amount of intravenous fluid in the bottle during the entire infusion procedure.

3,395,883
DETACHABLE FENDER MOUNTED REAR VIEW MIRROR
William J. Murgas, Wauwatosa, Wis., assignor to Velvac, Inc., Milwaukee, Wis., a corporation of Delaware
Filed Dec. 28, 1966, Ser. No. 605,490
5 Claims. (Cl. 248—480)

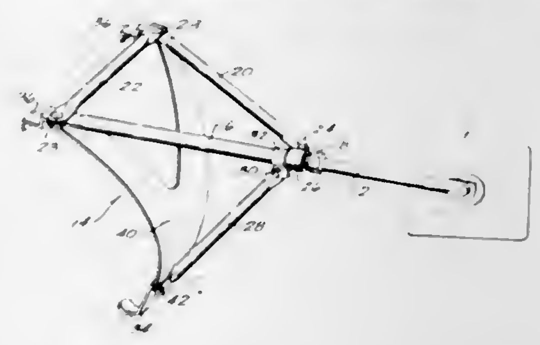

This disclosure comprises a three point connection mirror-mounting unit adapted to be readily removably mounted on the front fender of an automobile. The three

points of connection are interconnected by a Y-shaped clamping rubber which presses against the face of the fender and with the three points of connection holds the unit firmly in place.

3,395,884
CONCRETE CURB FORM CONSTRUCTION
Delvin E. Laukala, Auburn, Wash., assignor to Mardel Investment Company, Auburn, Wash., a corporation of Washington
Filed Sept. 15, 1965, Ser. No. 487,506
7 Claims. (Cl. 249—4)

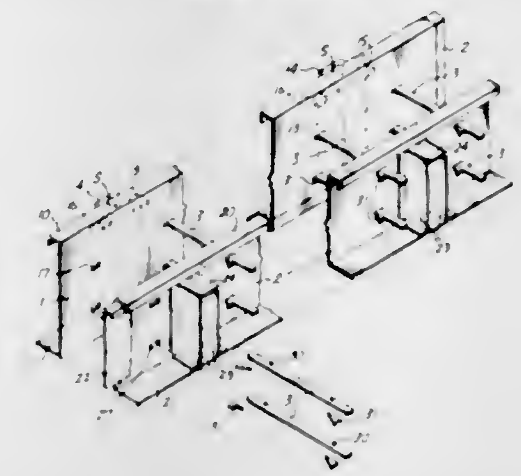

A concrete curb form system having vertical side forming walls held during the concrete pouring operation in an exact spaced position one from another by cross-tie bars. One forming wall is staked in position and the opposite side wall is held in position through engagement by a notch, adjacent one end of the tie bar, with a slot formed in the side wall. The tie bar is held at its other end by engagement with a second notch, exactly spaced from the first notch the desired width of the curb and inserted into a slot formed in the staked side wall. The tie bar is held in position by wedges forced between the slot wall and the tie bar and thereby prevents the forming walls from moving away from or toward one another.

3,395,885
ZONE VALVES
Lawrence A. Kolze, Bensenville, Paul W. Schaff, Arlington Heights, and Nello L. Benedetti, Mount Prospect, Ill., assignors to The Dole Valve Company, Morton Grove, Ill., a corporation of Illinois
Filed Sept. 1, 1966, Ser. No. 576,626
1 Claim. (Cl. 251—11)

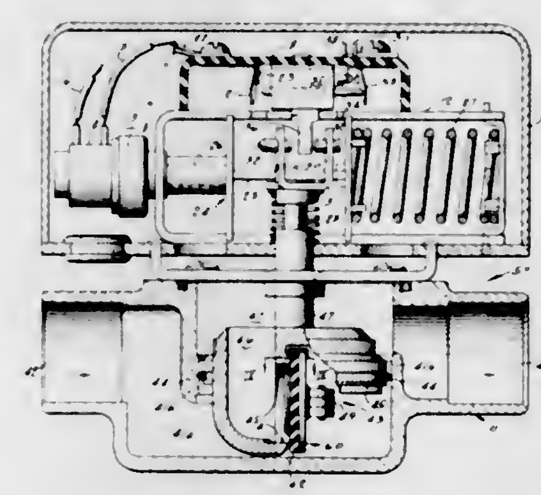

This invention is directed to a zone valve with a valve housing having an inlet and an outlet and a fluid chamber therebetween. The inlet and outlet are formed to be in communication with different portions of the chamber. Also provided is a fluid flow control mechanism which is in sealing contact with the walls of the chamber so as to divide the input communicating portion from the output communicating portion of the chamber. The fluid flow control mechanism includes a fluid flow member and a valve seat cooperable therewith. The normal movement of the fluid flow member is toward and away from the valve seat formed in the mechanism for varying the fluid flow through the valve housing from a maximum to a minimum in response to a motive element activated in response to a sensed temperature.

3,395,886
KNURLED SLEEVE CONNECTOR FOR SPECIAL OPERATOR TO VALVE
Donald G. Fawkes, Chicago, Ill., assignor to Henry Pratt Company, a corporation of Illinois
Filed June 18, 1965, Ser. No. 464,962
6 Claims. (Cl. 251—229)

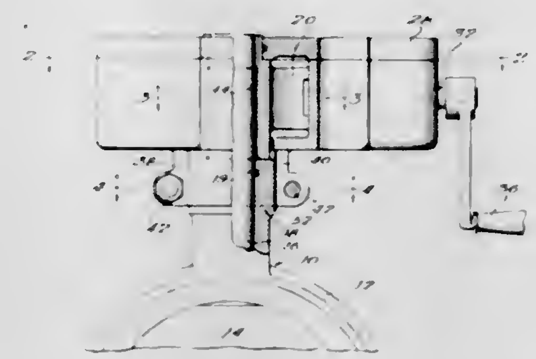

An infinitely adjustable keying structure for connecting a valve operator to a valve for accurately positioning the valve selectively in the closed and opened positions corresponding to limits of movement of the valve operator.

3,395,887
FUEL FLOW CONTROL VALVE
Roy C. Demi, Greensburg, Pa., assignor to Robertshaw Controls Company, Richmond, Va., a corporation of Delaware
Filed Aug. 2, 1965, Ser. No. 476,315
11 Claims. (Cl. 251—234)

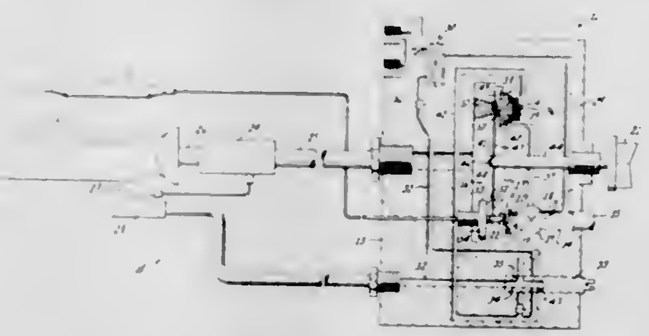

This disclosure relates to a valve construction having a valve seat member provided with two spaced and offset portions facing in the same direction as the valve seat thereof and respectively sealing against spaced shoulders of a housing member to define a first chamber between the portions of the valve seat member that is interconnected to an inlet of the housing and to define a chamber on the other side of the valve seat member that is interconnected to the outlet, the valve seat member carrying a valve member disposed in the other chamber for opening and closing the valve seat thereof. The distance between the shoulders of the housing is slightly greater than the distance between the portions of the valve seat member so that one of the portions will be placed under compression and flex against its respective shoulder before the other portion seals against its respective shoulder.

3,395,888
TAP AND REGISTER
Eduardo de Lima Castro Neto, Estrada do Timbo 63, Rio de Janeiro, Brazil
Filed Apr. 13, 1965, Ser. No. 447,641
Claims priority, application Brazil, Apr. 13, 1964, 158,379
1 Claim. (Cl. 251—256)

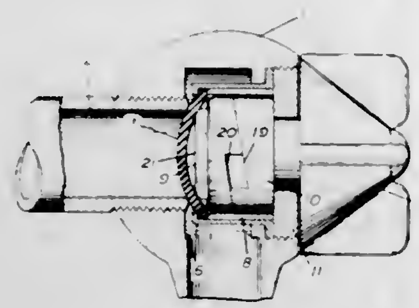

1. A tap comprising a body having a longitudinally extending cavity therein, said cavity having an enlarged forward portion and a smaller rear portion, a supply pipe having two terminals fixed to said rear portion, a flexible disc fixed at its periphery in said forward portion adjacent said rear portion and one of said terminals of said pipe, a spigot on said body extending transversely to said cavity, a cam element slidably mounted in said forward portion cooperating with said disc at its central portion to open and close said supply pipe, manually operated cam means cooperating with said cam element to move said disc to closed position, said spigot having communication with said supply pipe when said disc is in open position spaced from said supply pipe, said flexible disc is rubber and is secured in position adjacent said rear body portion by two telescopically cooperating cylinders each cylinder being radially spaced from said forward body portion to provide a flow path around the outer cylinder.

3,395,889
ANGLE COCK WITH POSITIVE SEALING PRESSURE REDUCTION MEANS
Dale A. Chovan, Trafford, Pa., assignor to Westinghouse Air Brake Company, Wilmerding, Pa., a corporation of Pennsylvania
Filed Sept. 29, 1965, Ser. No. 491,322
4 Claims. (Cl. 251—163)

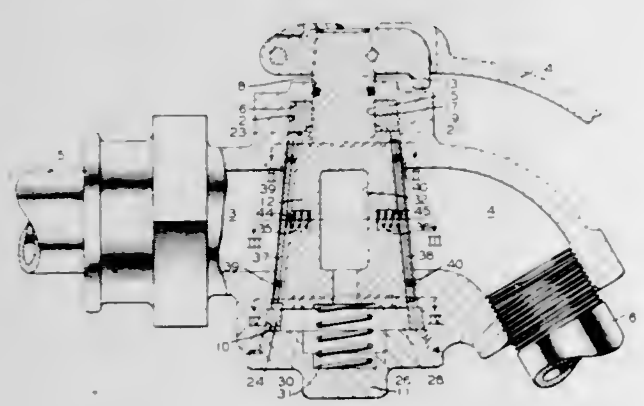

An angle cock having a rotary conical key carrying on its periphery a plurality of sealing panels which are biased into sealing engagement against the inner surface of the bore in the cock body in the closed position of the cock. Two sets of cooperating cam means are provided, one set between the key and one edge of the panels, and another between the cock body and the other edge of the panels for completely retracting the sealing panels from the inner surface of the bore during rotary movement of the key, thereby reducing wear on said panels and said inner surface to a minimum.

3,395,890
PLASTIC CONTROL VALVE AND METHOD FOR MAKING SAME
Arthur F. J. Eckert and David L. Moorcroft, Glastonbury, Conn., assignors to Chandler Evans Inc., West Hartford, Conn., a corporation of Delaware
Filed Oct. 23, 1965, Ser. No. 503,177
10 Claims. (Cl. 251—333)

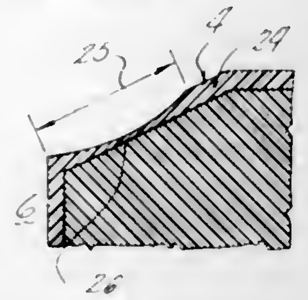

A method of constructing a fluid tight ball valve having a plastic valve housing by first initially molding the tapered seat into the housing to take advantage of the discovery that a reinforced plastic housing in the "as molded" condition has a thin outer layer of unfilled plastic, and secondly forcing the ball valve into the unfilled layer so that the unfilled layer is deformed into fluid tight engagement with the ball.

3,395,891
LOCK FOR TURBOMACHINERY BLADES
Joseph C. Burge, Cincinnati, and Richard Beal, Loveland, Ohio, assignors to General Electric Company, a corporation of New York
Filed Sept. 21, 1967, Ser. No. 669,454
4 Claims. (Cl. 253—77)

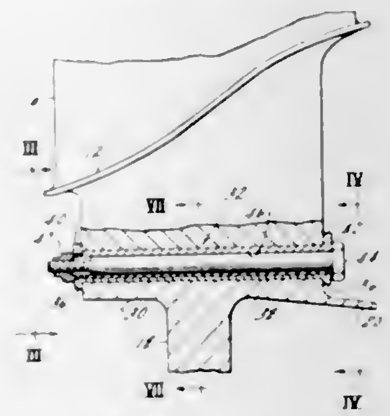

This disclosure illustrates a fragmentary portion of a compressor rotor rim having tanged blades which are locked thereon by locking devices lying between the bottoms of the tangs and slots in the rim. The locking devices comprise a retainer having legs embracing the opposite sides of the rim and one leg engaging one end of the tang. A spacer maintains the blade in an elevated position and has a leg which engages the opposite end of the tang. The retainer and spacer are held together by a bolt. Upon removal of the bolt and the spacer, the blade may be dropped radially inwardly to clear a midspan shroud between adjacent blades and thus enable the blade to be removed from the slot. The bolt is threaded into a captured nut on the inner member so that assembly and disassembly can be had from one side of the rotor.

3,395,892
OVER-CENTER LOAD BINDER AND GRIPPING DEVICE
Ralph A. Ratcliff, 1300 Sunnyslope Ave., Belmont, Calif. 94002
Filed June 2, 1967, Ser. No. 643,237
15 Claims. (Cl. 254—79)

A cable gripping device which may be released selectively, gradually or rapidly, while the cable is gripped thereby under tension. The device may be used separately, or in combination with an over-center or toggle type load binder as an integral component thereof. The cable engaging jaws of the gripping device are normally urged
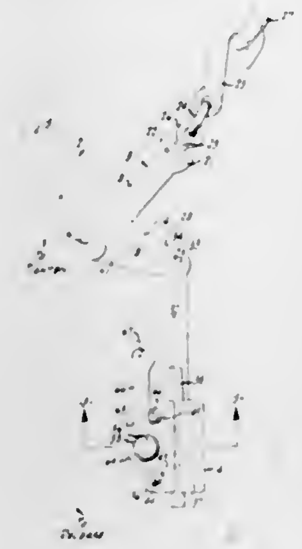
toward each other by a spring actuated cam mechanism which is operable directly or remotely when the cable is to be released.

3,395,893
HYDRAULIC SPOOLING DEVICE
August W. Kumpf, Conshohocken, Pa., assignor to Clyde Iron Works Inc., Duluth, Minn., a corporation of Minnesota
Filed Nov. 30, 1966, Ser. No. 598,096
8 Claims. (Cl. 254—190)

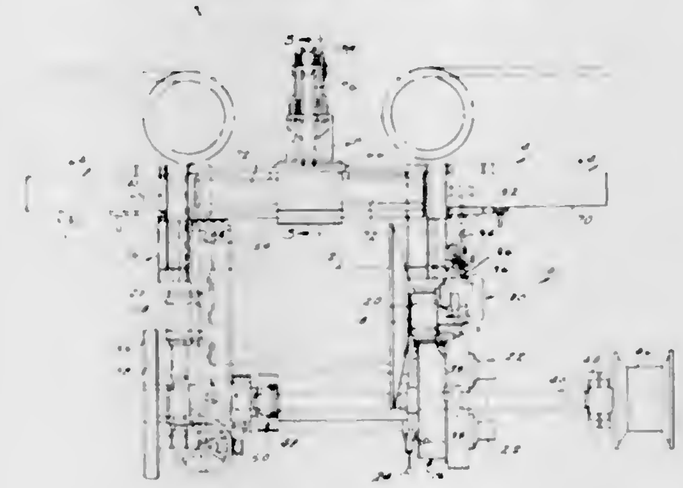

A hydraulically driven touring winch for marine use having a specially constructed spooling device and spooling control unit. The spooling device includes a swivelly mounted rope sheave which is reciprocated relative to the windup drum of the winch by opposed pairs of horizontally disposed hydraulic rams. The spooling control unit includes a planetary gear set having a rotary output employed to adjust the control valve for the hydraulic rams. The gear set operates from two rotary inputs, one of which is responsive to rotation of the windup drum, and the other of which is responsive to the extent of linear movement of the rope sheave.

3,395,894
VIBRATORS
Sven Hedelin, Granitvagen 18C, Uppsala, Sweden
Filed Sept. 28, 1966, Ser. No. 582,657
6 Claims. (Cl. 259—1)

A vibrator includes an elongated rotor having at one end a rotor body provided with a conical guiding surface which cooperates with a conical guiding surface of a casing enclosing the rotor. The rotor body carries a counter-weight. A slide bearing is secured to the rotor and is arranged centrally in the casing. The slide bearing is driven by a centrally located shaft which is coupled with another shaft driven by a motor, so that the rotor can

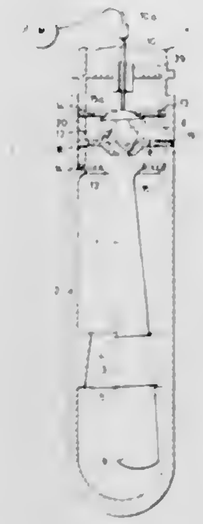

carry out simultaneously a rotating and a gyrating movement about the same center. The slide bearing is lubricated by the centrifugal force produced during the rotation of the rotor.

3,395,895
PROCESS AND APPARATUS FOR PUTTING KAOLIN IN AN ABSOLUTELY HOMOGENEOUS SUSPENSION
Jacques E. Cellier, B.P. 58 Rue de Maroc, Aix-les-Bains, France
Filed July 11, 1966, Ser. No. 564,066
8 Claims. (Cl. 259—43)

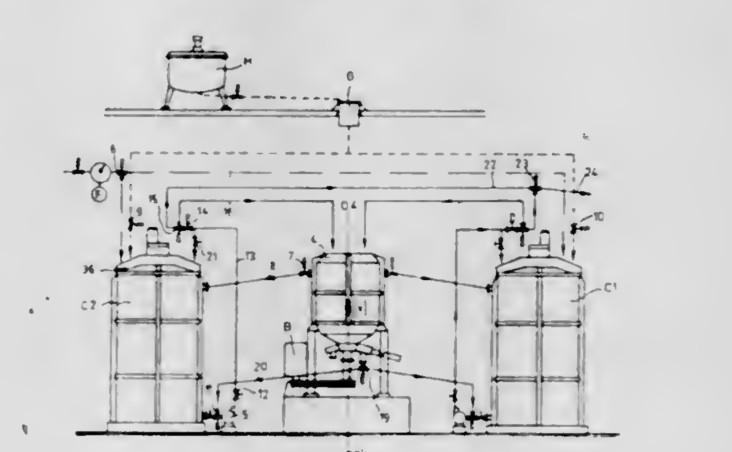

In an apparatus for mixing ingredients is provided a rotary assembly composed of six radial blades and an olive-shaped part coaxial to the latter and equipped with helical blades on its own surface; the rotation of this assembly stirs the ingredients which are constantly drawn toward the bottom according to the vortex created by the bladed part. Fixed elements disposed in the vat of the mixer and constituting deflectors prevent the ingredients from turning in a single mass in the vat of the mixer. A fixed strainer constituted by an interior grill concentric with a sector of the mixer vat, the grill being generally cylindrical and slightly conical, let pass toward the delivery conduits of the vat only those particles of the ingredients which are fine enough to be admitted without inconvenience into one or the other of two agitation tanks, which are utilized sequentially in closed fluid circuit with the mixer to mix successive batches of the kaolin and water which constitute the principal ingredients.

3,395,896
APPARATUS FOR TREATING SOIL
William E. Funk, 504 E. Dunlap St., and Irvin H. Lehman, 310 E. Allen St., both of Kentland, Ind. 47951
Original application Mar. 28, 1966, Ser. No. 537,772, now Patent No. 3,351,287. Divided and this application Nov. 14, 1966, Ser. No. 606,482
16 Claims. (Cl. 259—96)

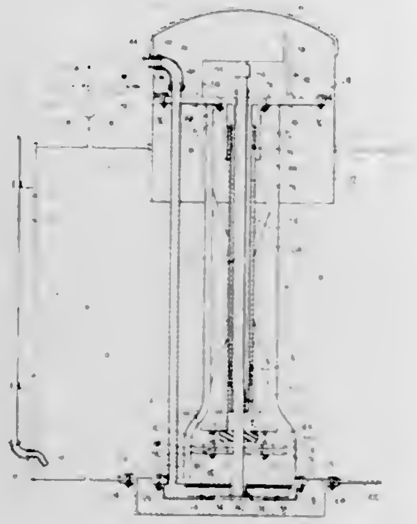

The soil treating apparatus comprises a vehicle with a container mounted thereon and having a mixing and pumping unit for respectively forming a viscous slurry and delivering the same from the container to a plurality of applicators carried by the vehicle. The mixing and pumping unit comprises an impeller mounted at the lower end of a shaft journalled on bearings within an encompassing tube. The second tube encloses the first tube and the shaft and carries a pair of mixing plates at its lower end directly above the impeller. A compressible seal is disposed between the open lower end of the second tube and the mixing plates whereby the bearings mounting the shaft are not exposed to the slurry.

3,395,897
METHOD OF AND APPARATUS FOR MIXING HYDRAULICALLY HARDENABLE BINDING MATERIAL AND WATER
Rudolf Kalich, 1 Carl Benz Str., 7504 Weingarten, Germany
Filed Mar. 9, 1966, Ser. No. 532,948
Claims priority, application Germany, Mar. 11, 1965, K 55,514, K 55,515; Sept. 27, 1965, K 57,236
12 Claims. (Cl. 259—148)

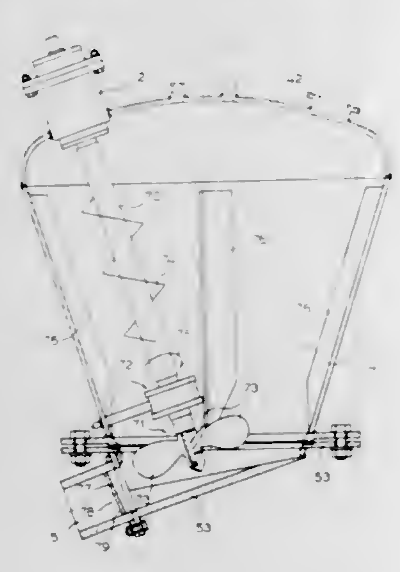

11. A method of making a cement-water paste in a mixing container having rotatable mixing blades therein, which includes the steps of: introducing mixing water into said container, rotating said blades at a first speed so as to subject said introduced mixing water to rotation while avoiding cavitation, introducing cement into said rotating water, and increasing the rotational speed of said blades to a second speed at which cavitation is produced.

3,395,898
BULK BLENDER
Christianus Marinus Theresia Westelaken, 190 North St., Strathroy, Ontario, Canada
Filed Jan. 26, 1967, Ser. No. 611,995
8 Claims. (Cl. 259—180)

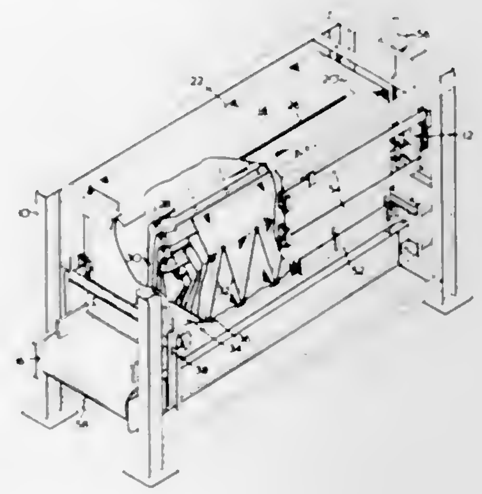

An apparatus for blending dry, free flowing materials such as chemical fertilizers having a gravity feed hopper containing a series of sloping transverse and longitudinal baffles to divide and blend the mixtures fed through. Uniform discharge from all parts of the hopper is assured and the blended material falls onto a conveyor belt for transport to a bagging station.

3,395,899
CARBURETOR
Richard D. Kopa, Van Nuys, Calif., assignor to The Regents of the University of California, a corporation of California
Filed Sept. 28, 1965, Ser. No. 490,823
15 Claims. (Cl. 261—22)

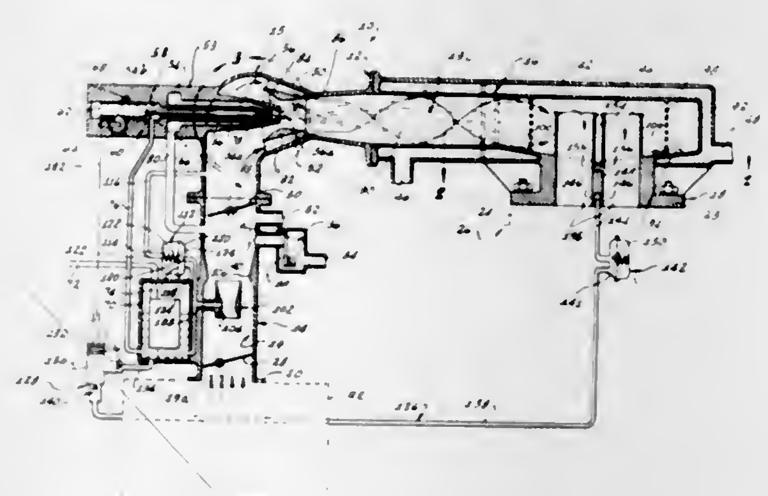

A fuel-atomizing carburetor having means for regulating the air-fuel ratio of the combustible mixture delivered to the engine according to prescribed characteristics. This air-fuel ratio regulating means comprises a primary fuel metering means which is operatively connected to the throttle valve of the carburetor for metering fuel flow to the induction air stream flowing through the carburetor in accordance with a continuous function of the throttle valve setting when the manifold intake vacuum and the pressure drop across the throttle valve are critical or above, such that changes in the engine intake manifold vacuum do not affect the induction air flow rate through the carburetor, and a secondary fuel metering means for metering fuel flow to the induction air stream when the pressure drop across the throttle valve is less than critical. In a first described embodiment, the secondary fuel metering means is activated in response to engine intake manifold vacuum when the pressure drop across the throttle valve becomes less than critical. In a second embodiment, the secondary fuel metering means operates in response to the flow rate of the induction air upstream of the throttle, and may be set to become operative when this flow rate becomes sufficiently high to effect accurate metering of the fuel and before the pressure drop across the throttle valve actually drops below critical.

3,395,900
GAS AND LIQUID CONTACT APPARATUS
George W. Meek, Fort Myers, Fla., assignor to Munters & Co., Stocksund, Sweden, a Swedish company
Continuation-in-part of application Ser. No. 549,764, Apr. 22, 1966. This application May 9, 1967, Ser. No. 637,252
Claims priority, application Sweden, June 10, 1966, 8,014/66
8 Claims. (Cl. 261—29)

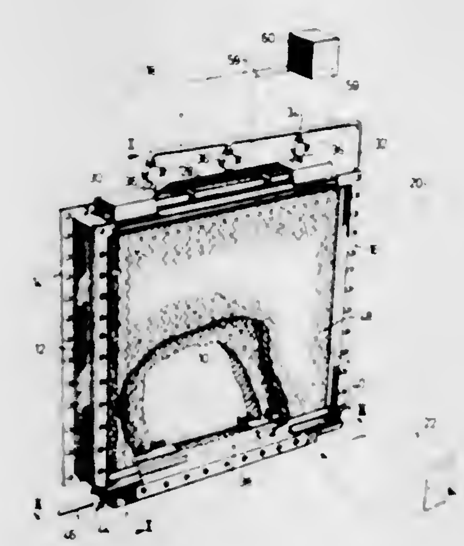

A humidifier having a contact body which is generally referred to as a packing which is provided with a plurality of passages in which liquid flows by gravity in contact with air being passed horizontally therethrough by a fan. A plurality of troughs are mounted above the packing beneath liquid supply means and arranged to be tilted intermittently when the troughs become filled to a predetermined level to cause the water to be spilled out and flow downwardly through the passages and then automatically returned to its liquid receiving position.

3,395,901
FILTER CONTROL AND CLEANING
Robert V. Moser, Northfield, Ohio, assignor, by mesne assignments, to North American Rockwell Corporation, a corporation of Delaware
Filed Sept. 8, 1964, Ser. No. 394,825
6 Claims. (Cl. 261—80)

A renewable filter assembly comprises an endless band of filter material disposed with parallel flights vertical and normal to the air flow path with upper and lower seals defining a filter zone. A stream of cleaning liquid sometimes containing a detergent is directed at an acute angle against the inner side of the flight first traversed by the air to be cleaned below the zone, and periodic advance of freshly cleaned filter material into the zone is so limited that no more than half of the zone in the flight last traversed by the air being cleaned is occupied by

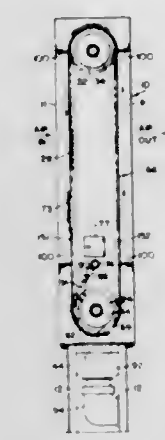

freshly wetted filter material, to prevent undesirable restriction of air passage in the zone by wetted filter areas. The endless band has an openable flap or trap door section which automatically opens during each band movement cycle to permit the washing out of accumulated lint balls and the like.

3,395,902
COOLING TOWERS
Dudley Brian Spalding, London, and John Roy Singham, Richmond, Surrey, England, assignors to William Stanley Lovely, London, England
Filed Nov. 23, 1964, Ser. No. 413,021
2 Claims. (Cl. 261—112)

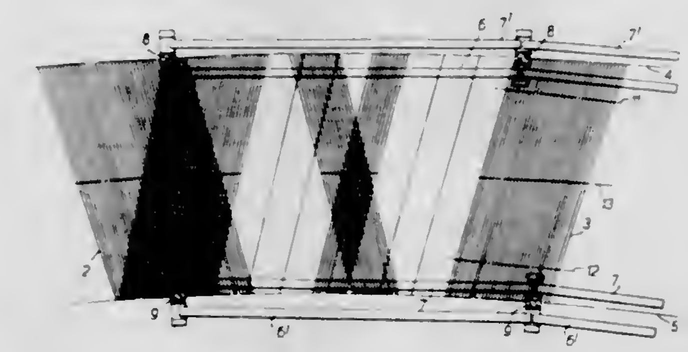

A cooling tower of circular form has packing support structure including concentric rings of beams. The packing comprises two layers of superposed vertically arranged sheets and the sheets of the one layer are skewed, preferably at an angle of 30°, to one another.

3,395,903
AIR AND WATER CONTACT BODY AS EMPLOYED IN COOLING TOWERS
Per Gunnar Norback, 33 Askrikevagen, Lidingo, Sweden, and George W. Meek, 1205 6th St., Page Park, Fort Myers, Fla. 33901
Filed July 15, 1966, Ser. No. 565,459
Claims priority, application Sweden, Jan. 26, 1966, 1,039/66
4 Claims. (Cl. 261—112)

An air and water contact body such as is employed in cooling towers, the body being made up of corrugated layers of sheet material with their corrugations extending at an angle, the corrugations forming through-passing channels between them. The sheets are joined together adjacent to at least one edge of the body by an adhesive applied at said edge, the layers supporting each other

over the major portion of their area without being secured together in said major portion of their area. The invention also contemplates the provision of an adherent mate-

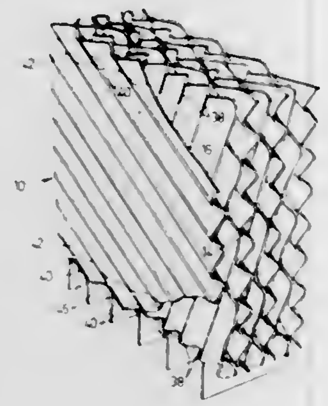

rial such as an adhesive applied at the edge of the body and which acts to form a strengthening element or bead along said edge.

3,395,904
ROTARY FURNACE WITH ROTATABLE CHAMBER
Hisayoshi Maeda, Hiroshima-ken, Japan, assignor to Toyo Kogyo Company Limited, Hiroshima-ken, Japan, a company of Japan
Filed July 1, 1966, Ser. No. 562,152
7 Claims. (Cl. 263—7)

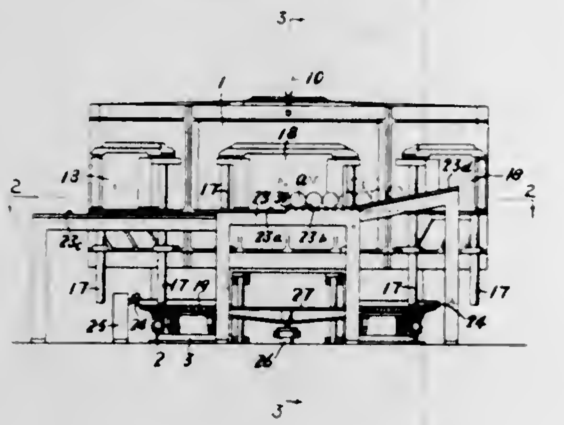

A rotary furnace with rotatable chamber rotatably supported by means of circular rail and wheels for predetermined periodic rotation in conjunction with the operation of charging and discharging the pieces treated, and the said chamber being defined by a domed ceiling and a hearth and the ceiling is provided at the center thereof with means for jetting the flame into the chamber, and the hearth has beneath the said flame jetting means a baffle plate for permitting turning the jetting flame from the ceiling along the shape of top surface of the baffle plate for diffusing the flame in predetermined directions for various predetermined heat-treatments.

3,395,905
COMBINATION DRYER AND COOLER
Maynard C. Isheim, Menlo Park, and Richard C. Stroshane, Redwood City, Calif., assignors to Bartlett-Snow-Pacific, Inc., San Francisco, Calif., a corporation of California
Continuation of application Ser. No. 287,631, June 13, 1963. This application Mar. 28, 1966, Ser. No. 538,107
6 Claims. (Cl. 263—33)

1. In a combination dryer-cooler wherein substantially complete drying and cooling operations take place within a single rotary unit, a substantially cylindrical shell having a material inlet end for receiving material to be dried and cooled within the shell and a material discharge end for discharging material that has passed through the shell, means mounting said shell for rotation about its longitudinal axis such that material deposited into said inlet end is advanced longitudinally through said shell towards said material discharge end, an outlet gas duct mounted adjacent the material inlet end of said shell for permitting gases to be discharged from said shell, a drying gas duct extending through the material discharge end of said shell and a substantial distance into the interior thereof, said drying gas duct defining a region for the injection of drying gas into said shell, and together with said outlet gas duct, defining a drying section therebetween and inside of the shell so that when injected, said drying gas moves through said drying section to the outlet gas duct, a cooling gas duct mounted adjacent the material discharge end of said shell for introducing a cooling gas directly into the shell, said cooling gas duct

together with said drying gas duct defining a cooling section therebetween and inside of the shell so that when introduced, said cooling gas moves through said cooling section end to said region for the injection of drying gas, said cooling gas mixing with the dried heated material throughout said cooling section to cool the same and to receive sensible heat therefrom prior to passage of said heated cooling gas into the drying section, said heated cooling gas then intermixing with the drying gas at said region for the injection of drying gas to proceed with the drying gas through said drying region and to mix with the material to heat and dry the same.

3,395,906
ROTARY TRONA CALCINER
James V. Wiseman, Lafayette, and Henry D. Hellmers, Westend, Calif., assignors to Stauffer Chemical Company, New York, N.Y., a corporation of Delaware
Filed Apr. 13, 1966, Ser. No. 542,994
1 Claim. (Cl. 263—33)

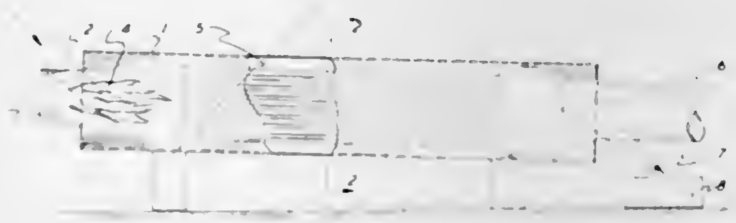

A calciner for calcining trona ore having an elongated, rotatable metal shell, mounted in a canted position with respect to the horizontal, which is interiorly divided into the following three sections: (A) a smooth surfaced, cylindrically shaped combustion section which is located at the inlet end of the calciner (B) a centrally located cascading section having lifters attached to the interior surface of the metal shell (C) a smooth surfaced settling section located adjacent the cascading section at the exit end of the shell. The calciner has an inlet shaft extended into the combustion section for supplying trona ore, a burner located at the inlet of the shell and apparatus for rotating the metal shell.

3,395,907
REACTOR FOR HYDROMETALLURGICAL PROCESSES
Jury Nikolaevich Svyadosch, Pervomaiski, East Kazakhstan, and Jury Petrovich Lazarev and Mikhail Andreevich Melnichenko, Ust-Kamenogorsk, U.S.S.R., assignors to Ust-Kamenogorsky Svintsovo-Tsinkovy Kombinat imeni V.I. Lenina, Ust-Kamenogorsk, U.S.S.R.
Filed Feb. 3, 1965, Ser. No. 430,084
5 Claims. (Cl. 266—12)

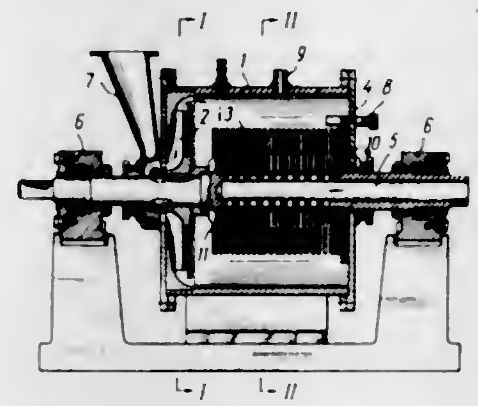

A reactor for hydrometallurgical processes in which a casing having means for feeding initial materials and discharging finished products therefrom is provided with a rotor defined by a hollow shaft having separation discs mounted thereon with clearances between adjacent discs and at the points of mounting on the shaft the discs being provided with bores connecting the hollow part of the shaft to the clearances between the discs.

3,395,908
HOT METAL LEVEL DETECTOR
Ray E. Woodcock, Tarentum, Pa., assignor to Allegheny Ludlum Steel Corporation, Brackenridge, Pa., a corporation of Pennsylvania
Filed Oct. 24, 1965, Ser. No. 504,772
6 Claims. (Cl. 266—34)

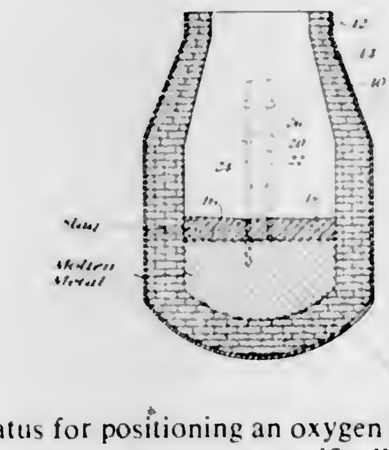

Apparatus for positioning an oxygen lance within a basic oxygen converter, and more specifically apparatus for detecting the level of the hot metal bath in a basic oxygen converter by means of a pair of conductive probes extending downwardly below the lower end of the lance.

3,395,909
VACUUM-ENCLOSED ROTATABLE FURNACE
Torsten Eklund, Surahammar, Sweden, assignor to Allmanna Svenska Elektriska Aktiebolaget, Vasteras, Sweden, a corporation of Sweden
Continuation of application Ser. No. 284,451, May 31, 1963. This application Sept. 22, 1966, Ser. No. 581,395
Claims priority, application Sweden, June 1, 1962, 6,150/62
2 Claims. (Cl. 266—36)

1. A rotatable furnace for metallic materials comprising a furnace body having a cylindrical portion and a spout remote from said cylindrical portion, a tiltable stand, rolls mounted in said stand carrying said cylindrical portion for rotation about the axis of said cylindrical portion, a vacuum-tight wall secured to said stand and

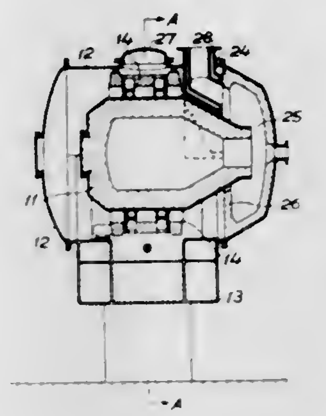

enclosing said furnace body, and at least one gas evacuation conduit extending through said wall and communicating with the portion thereof adjacent said spout.

3,395,910
METALLURGICAL TUYERE
Ronald L. W. Holmes, New Providence, N.J., assignor to Union Carbide Corporation, a corporation of New York
Filed Dec. 1, 1965, Ser. No. 510,772
5 Claims. (Cl. 266—41)

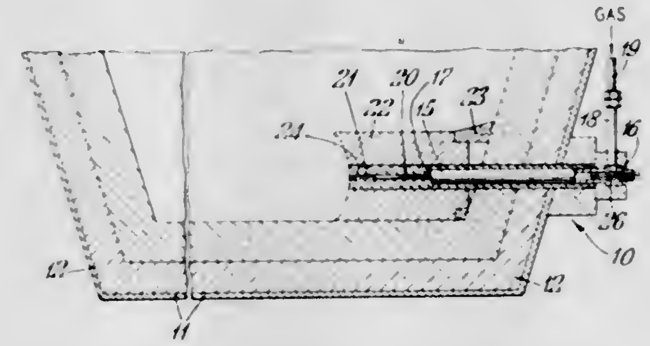

A metallurgical tuyere for submerged injection of inert gas into a molten metal bath, which comprises: a central conduit having an inlet end and a discharge end, a nozzle connected to the discharge end of such central conduit, such nozzle having a diameter which is smaller than the diameter of such central conduit, and a protective sheath of refractory material surrounding such nozzle and the immersed portion of such central conduit. The protective sheath of refractory material additionally forms a discharge passage extending axially from the discharge end of such nozzle for passing gas from said nozzle into the bath, whereby the refractory material serves to prevent molten material from coming into contact with the metal parts of the tuyere.

3,395,911
INDEXABLE CLAMPING MACHINE
Jerold D. Baxter, Rockford, Ill., assignor to Atwood Vacuum Machine Company, Rockford, Ill.
Filed Jan. 11, 1966, Ser. No. 519,909
12 Claims. (Cl. 269—31)

Clamping fixtures mounted on a rotatable table are indexed through successively spaced clamping, working and unclamping stations and include fluid-actuated operators which are energized to shift the fixtures into and out of clamping engagement with workpieces as the fixtures dwell in the clamping and unclamping stations. Pressure fluid for energizing the operators is supplied by a fluid injector which momentarily couples up with the operator

of each fixture dwelling in the unclamping station to cause unclamping of such fixture and to cause simultane-

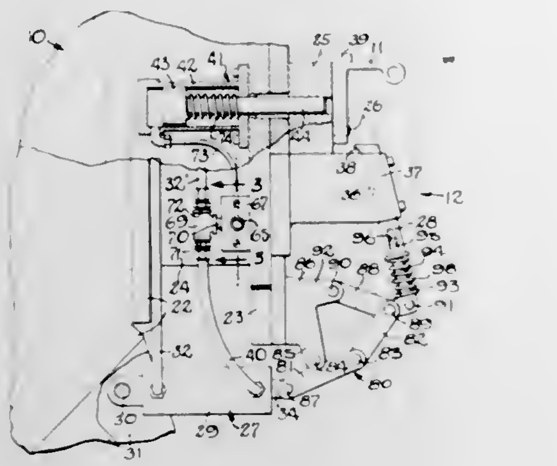

ous clamping of another fixture dwelling in the clamping station.

3,395,912
SEPARATING AND TRANSPORTING PILED METAL SHEETS
Karl Heinrich Tappolet, Kusnacht, and Alfred Gerspacher, Zurich, Switzerland, assignors to Firma Tagers G.m.b.H., Zurich, Switzerland
Filed May 2, 1966, Ser. No. 546,879
Claims priority, application Germany, Jan. 15, 1966, T 30,267
11 Claims. (Cl. 271—16)

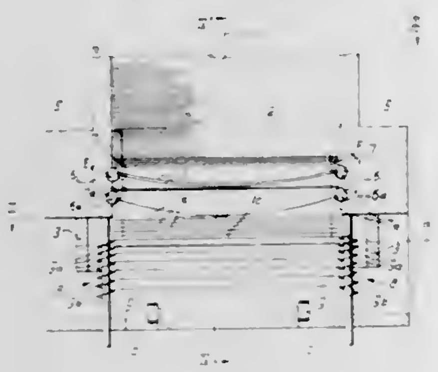

A process and apparatus for separating and transporting metal sheets from a pile wherein the endmost sheet is separated from the pile by forces applied to opposite edges of the sheet for elastically bending the sheet, whereby the sheet is lifted and separated from the pile. The elastic bending forces are then released to permit the separated sheet to return to its original configuration. The sheet is then subjected to a magnetic field having force lines substantially parallel to the plane of the sheet, which magnetic field maintains the separated sheets in a substantially parallel and spaced relationship. The sheets are then individually removed from the magnetic field by suitable conveyor means.

3,395,913
SHEET MATERIAL DISTRIBUTION SYSTEM
George D. Del Vecchio, North Rose, and George H. Perry, Pittsford, N.Y., assignors to Xerox Corporation, Rochester, N.Y., a corporation of New York
Filed Oct. 11, 1966, Ser. No. 585,896
6 Claims. (Cl. 271—64)

A sorter having catch trays for the reception of sheet material. The sorter is adapted to be used individually or operatively linked with a plurality of similar units. The assembly is capable of directing the output of a reproducing machine into the catch trays of the sorter in accordance with a predetermined program. The program

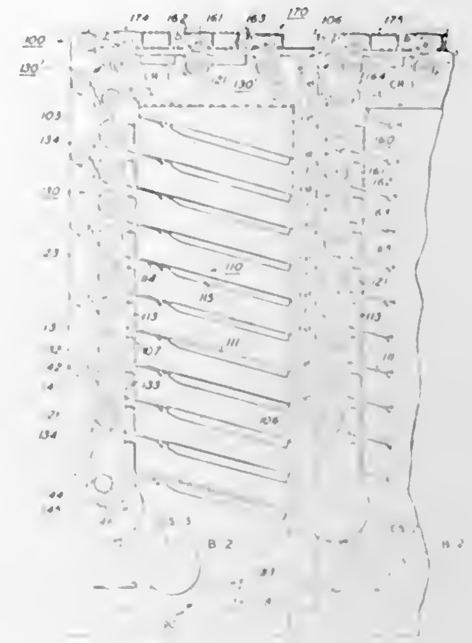

is determined by a prepunched tape and read by a programmer to deliver any number of sheets into any catch tray of the sorter units.

3,395,914
SHEET HANDLING MACHINE
Dario Buccicone, Gary, Ind., assignor to Bucciconi Engineering Co., Inc., Gary, Ind., a corporation of Indiana
Filed Nov. 21, 1966, Ser. No. 595,826
21 Claims. (Cl. 271—68)

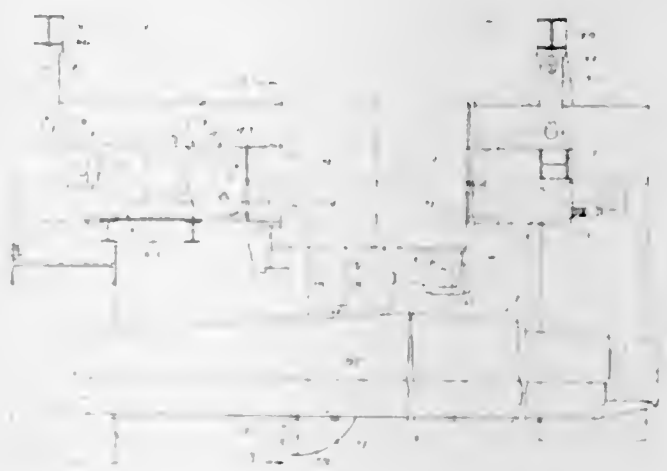

A machine for piling metal sheets wherein the sheets are advanced to a pile supporting lift bed at a piling area between upright end frames by a sheet advancing overhead magnetic conveyor structure which is mounted on the end frames, which machine includes side guide assemblies adjustably supported on pairs of longitudinally extending side beams, the innermost beams being fixed on the end frames and the outermost beams being laterally adjustable. The side guide assemblies are arranged in pairs and mounted on pairs of cross beams which are longitudinally adjustable along the longitudinal beams and which are slidable relative to each other with lateral adjustment of the outside longitudinal support beams. Each guide assembly has a sheet positioning finger unit fastened to the lower end of the supporting linkage so as to enable the finger units to swing outwardly when lateral force is applied thereto and avoid damage to the

same. An end stop bumper is mounted on a bracket at the bottom end of pairs of pivoted link bars depending from a carriage which is movable longitudinally of the machine on tracks provided on an overhead support frame, the latter frame being supported at opposite ends by parallel links depending from cross bars on the upright end frames so as to provide for limited swinging movement of the carriage support frame.

3,395,915
VACUUM STACKER APPARATUS
Victor H. Clausen, Bellevue, and Arnold Zweig, Olympia, Wash., assignors to Simpson Timber Company, Seattle, Wash., a corporation of Washington
Continuation-in-part of application Ser. No. 481,839, Aug. 23, 1965. This application July 18, 1967, Ser. No. 654,114
4 Claims. (Cl. 271—74)

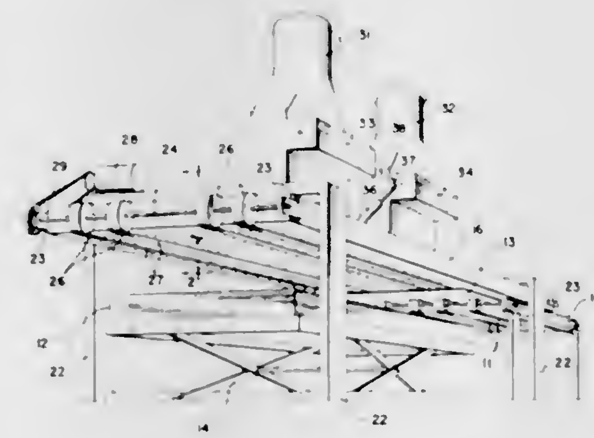

A vacuum stacking apparatus for receiving sheets issuing from a conveyor and moving them to a drop position and then releasing the sheets which drop vertically by gravity. The device includes a vacuum chamber with controls for applying and releasing vacuum pressure, the chamber having a perforated bottom wall for holding the sheets. A plurality of imperforate endless belts are arranged with their bottom runs moving across the perforated wall of the vacuum chamber. The sheets are carried along by the moving belts and held in contact with the belts and the perforated wall by vacuum pressure. When the sheets contact a limit switch on the preforated wall, the power means for the belts is cut off and the drag resulting from the vacuum pressure causes both the belts and the moving sheet to stop abruptly. As soon as the sheet is stopped the vacuum pressure is vented and the sheet is allowed to drop to a stack. In this manner the sheets are indexed or caused to stop in the exact position and are dropped to form a neat stack. As soon as the sheet is dropped, the belts are again energized and vacuum pressure is again applied to the vacuum chamber to receive, convey and drop the next succeeding sheet.

3,395,916
SHEET FEEDING APPARATUS
Ian George Dobson and Michael John Anthony Bass, London, England, assignors, by mesne assignments, to Masson Scott Thrissell Engineering Limited, London, England, a corporation of England
Filed Apr. 19, 1966, Ser. No. 543,735
Claims priority, application Great Britain, Apr. 28, 1965, 17,867/65
7 Claims. (Cl. 271—88)

A sheet stacking apparatus is provided with an electrically insulated member adjacent one side of the stack being formed on a support; an electric circuit connected between this member and at least one electrically conductive part adjacent at least one other side of the stack produces an output signal representing the capacitance between the member and the conductive parts, and this signal

controls the relative heights of sheet delivery and stack support.

3,395,917
POLE VAULTING STANDARD
George L. Moore, 2620 Candlewood Way, La Habra, Calif. 90631
Filed Dec. 8, 1964, Ser. No. 416,845
1 Claim. (Cl. 272—59)

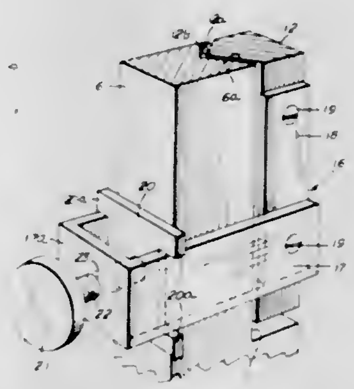

A gauge rod standard for athletic jumping events including a stationary upright with a parallel, vertically adjustable upright slidably connected in longitudinal, edgewise engagement with the stationary upright. A gauge rod support is attached to the adjustable upright. The engaging edge surfaces of the uprights have complementary tapered contours throughout their longitudinal extent, and a locking assembly affixed to the adjustable upright slidably embraces the stationary upright. Pressure applied to the locking assembly wedges the opposed tapered surfaces of respective uprights into frictionally locked engagement. The engaging edge surfaces of the stationary and adjustable uprights are provided with V-shaped grooves and wedge-shaped ridges respectively. The apex of the wedge shaped ridge is removed to prevent "bottoming" of the ridge in the groove.

3,395,918
STORAGE DEVICE AND OPERATING MECHANISM FOR A TARPAULIN FOR THE PROTECTION OF A PLAYING FIELD
Clyde W. Scoville, Rte. 1, Box 73A, Waukesha, Wis. 53186
Filed Oct. 26, 1965, Ser. No. 505,292
7 Claims. (Cl. 273—27)

A protective tarpaulin large enough to be unrolled to cover a playing field is wound on a reel which is detachably mounted on an elongated and wheeled storage carrier, the carrier being pivoted to the earth at one side

of the field to be protected. Ramps guide the tarpaulin reel in rolling from or onto the carrier under tension of power operated tapes. The tapes comprise one set which is wound upon the reel with the cover rolling said reel

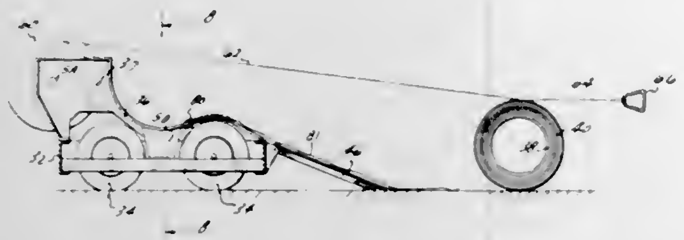

across a field and unrolling said cover, and one set having bight portions extending around and engaging the reel to wind the cover thereon, and to return the reel to the carrier.

3,395,919
RECORD PLAYER ADAPTER
Walter J. Freier, Benton Harbor, Mich., assignor to V-M Corporation, Benton Harbor, Mich., a corporation of Michigan
Filed Oct. 21, 1965, Ser. No. 499,500
2 Claims. (Cl. 274—39)

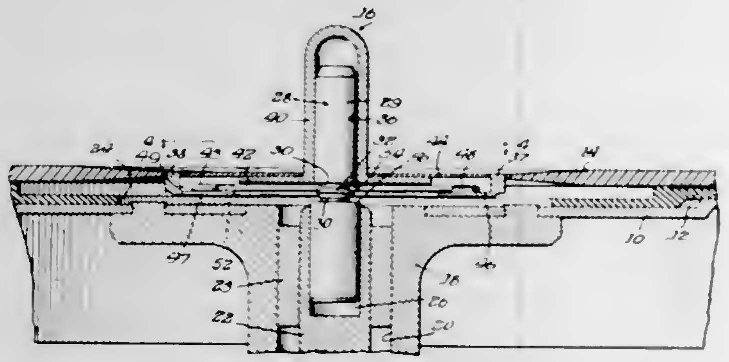

An easily positionable record player adapter for enabling records having central holes of different diameters to be centered on the turntable of a record player. The adapter includes a disc portion and an integral hollow cylindriacl ring and is mounted on a spindle so as to be movable between a lower position whereat the disc portion is contained within a depression in the turntable such that a record with a small center hole may be centered by the ring and an upper position whereat the disc portion is positioned to center a record with a large center hole. A U-shaped spring, which is seated on shelves formed in the disc portion, positively latches into a selected one of two grooves on the spindle to position the adapter in its lower or upper position.

3,395,920
AERIAL PROJECTILE GAME COMPRISING A TARGET HAVING MEANS RESPONSIVE TO NOT BEING HIT
Walter Moe, Plainview, N.Y., assignor to Ideal Toy Corporation, Hollis, N.Y., a corporation of New York
Filed June 27, 1966, Ser. No. 560,655
7 Claims. (Cl. 273—101)

1. In a game having a plurality of playing stations and playing pieces one at each station thereof, a figure mounted at a central location relative to said plurality of playing stations including a movable arm and having an open mouth, an actuating mechanism operatively connected to said movable arm and including time delay means for causing said arm to move into engagement with one of said playing pieces upon activation of said actuating mechanism, said playing pieces comprising object catapulting means adapted and dependent upon the skill of a player to cause the catapulting of an object into the mouth of said figure, means responsive to an object being received within said open mouth and operable to abort said actuating mechanism to thereby disable said arm from moving into contact with said playing piece, means to cause rotation of said figure, means at

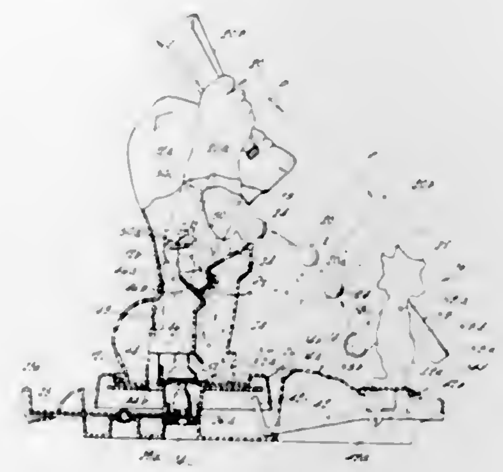

each of said playing stations and operable under the control of the player thereat for causing said figure to stop in a position directed toward a particular playing station, and means responsive to the stopping of the rotation of said figure for initiating operation of said actuating mechanism.

3,395,921
GAME APPARATUS HAVING INTERCHANGEABLE WESTERN HORSESHOW CONTEST INDICIA
Henry J. Mikulich, R.R. 1, Box 22, Crown Point, Ind. 46307
Filed Nov. 17, 1964, Ser. No. 411,851
4 Claims. (Cl. 273—134)

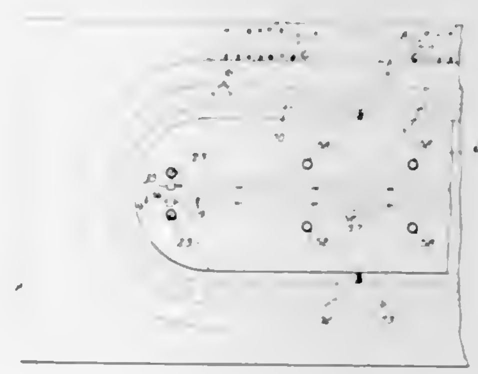

A game apparatus to simulate a western horseshow consisting of a game board having spaced magnetic discs embedded therein in a fixed pattern and a plurality of interchangeable contest panels having spaced permanent magnets embedded therein in the same pattern so that the contest panels can be interchangeably detachably secured on the game board in corresponding analogous positions relative to inscribed indicia on the game board. The contest panels provide game-piece progress paths corresponding the various western horseshow contests. Game pieces and other accessory simulated contest objects are provided, such as simulated horses and riders, simulated kegs and barrels, and the like. The simulated kegs and barrels have permanent magnets cooperating with magnetic discs in the game board to secure the kegs and barrels in various required positions on the panels to correspond with actual western horseshow barrel and keg positions.

3,395,922
GAME APPARATUS WITH A GAME BOARD, MARBLES, AND CARDS
Panagiotis M. Garangiotis, 142 Race St., Apt. 4, San Jose, Calif. 95126
Filed Aug. 9, 1965, Ser. No. 478,036
1 Claim. (Cl. 273—134)

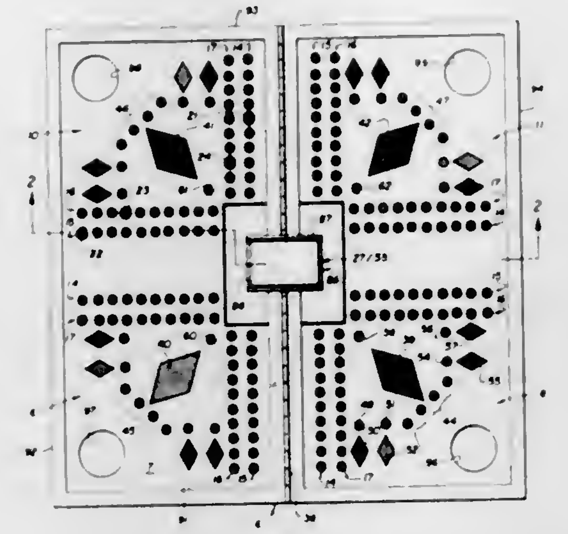

A game apparatus comprising a board having a plurality of separate playing areas, each area being provided with a marble-receiving recesses arranged in rows of different colors, at least one marble for each row of the same color as the corresponding row, and a deck of cards for controling the movement of said marbles along said rows, there being a group of cards in said deck for each of the row colors on said board, the cards in each group bearing indicia of a particular color and designating different numbers of recesses.

ERRATUM

For Class 274—39 see:
Patent No. 3,395,919

3,395,923
SELF-LUBRICATING STUFFING BOX
Marvin A. Remke and Frank G. Lyte, Bartlesville, Okla., assignors to Phillips Petroleum Company, a corporation of Delaware
Filed July 9, 1965, Ser. No. 470,835
2 Claims. (Cl. 277—59)

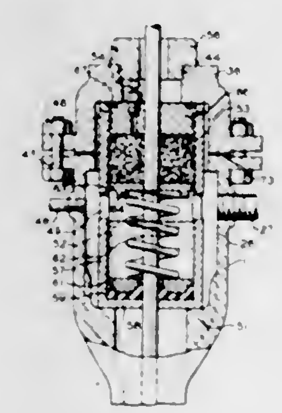

In an oil well tubing head having a chamber connected to the tubing, with a stuffing box at the top of the chamber, a polished rod reciprocating through said box and chamber, and an oil outlet conduit to said chamber, the improvement comprising an oil-retaining cup slidably mounted on said rod and secured in said chamber, with said oil outlet conduit connected to said chamber at a point at least as high as the top of said cup, whereby when oil passes from said tubing out said conduit it will also fill said cup which will retain said oil in contact with said rod for a substantial period of time. A further improvement is a helical spring around the rod between the stuffing box packing and packing between the cup and rod to separate the two packings and urge them into packing contact with the rod.

3,395,924
SEAL FOR TELESCOPED MEMBERS
Kermit J. Shumard and Ronald D. McDonald, Cincinnati, Ohio, assignors to General Electric Company, a corporation of New York
Filed Mar. 30, 1966, Ser. No. 538,626
1 Claim. (Cl. 277—135)

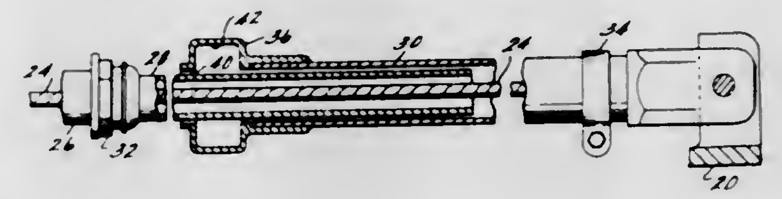

A cable guide comprises a pair of telescoped tubes which are relatively slidable. Sealing means are provided at the free end of the outer tube and comprise an annular chamber and a relatively short peripheral surface at the outer end of the chamber which forms a capillary passage in combination with the inner tube. The sealing means prevents entry of water between the tubes and, under freezing conditions, insures a frangible ice bond.

3,395,925
PLUG CONNECTOR OR STOPPER WITH A TUBULAR OUTER COMPONENT INTO WHICH A REMOVABLE INNER COMPONENT IS FITTED IN SEALING RELATIONSHIP
André S. Dreiding, Laubholzstrasse 48, Erlenbach, Switzerland
Filed July 14, 1966, Ser. No. 565,229
Claims priority, application Switzerland, July 16, 1965, 10,262/65
2 Claims. (Cl. 277—168)

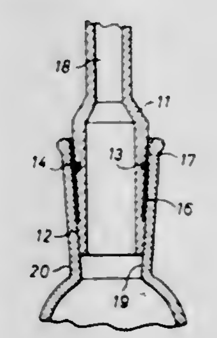

A plug and socket joint for chemical laboratory equipment having a tubular outer component into which a removable inner component can be fitted to form a seal with one of the components having a conical seating and the other a corresponding seating face tapered at the same angle with surfaces of different diameter and a resilient member in a shallow recess.

3,395,926
SEAL FOR BEARING
Gottfried E. Gunder, Sparks, Md., assignor to SKF Industries, Inc., King of Prussia, Pa., a corporation of Delaware
Filed June 28, 1965, Ser. No. 467,625
1 Claim. (Cl. 277—235)

A seal for sealing the space between confronting surfaces of a pair of relatively rotatable members such as

the inner and outer rings of a bearing assembly, comprising an imperforate frusto-conical reinforcing member made of a friable material and a frusto-conical sealing element made of rubber adhered to the inner face of the reinforcing member having lip portions extending beyond the inner and outer peripheral edges of the reinforcing member. The seal is adapted to seat in an annular groove in the outer ring by positioning the seal assembly adjacent the opening defined by the outer edge of the groove and then applying an axial force to the reinforcing member to snap the seal in place simultaneously

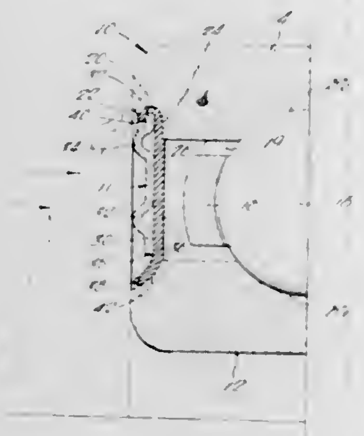

deforming the friable material of the reinforcing member so that it extends radially in the opening between the rings. In order to facilitate deformation of the reinforcing member, a pair of circumferentially extending, radially spaced projecting beads are provided in the face thereof which, as illustrated in FIG. 4, take up the bulk of the deformation of the reinforcing member when it is assembled in place. Further, the beads face outwardly and the outer bead is so disposed to provide a clearance between the rubber sealing element and the land edge on the outer ring.

3,395,927
TOOL HOLDER AND TOOL ASSEMBLY
Earl J. Hammond, Frankenmuth, Mich., assignor, by mesne assignments, to Houdaille Industries, Inc., Buffalo, N.Y., a corporation of Michigan
Filed Apr. 19, 1965, Ser. No. 449,124
6 Claims. (Cl. 279—51)

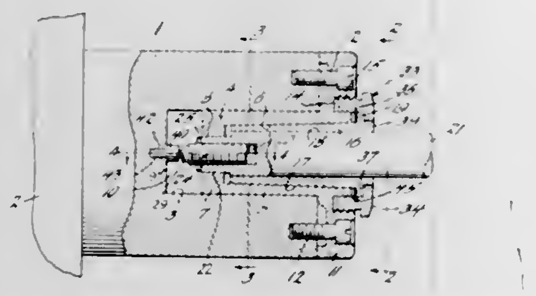

A holder assembly for tools and workpieces wherein a shank is to be held by a tapered collet mounted in a holder for axial movement to radially clamp down on the shank when a clamping nut is actuated to axially move the collet; and wherein axially compressible shank positioning means is provided to resist axial inward movement of the shank when the shank is initially inserted a predetermined distance into the holder by the operator, and to positively limit axial inward movement of the shank when the collet means is clamped down and carries the shank axially inwardly with it a predetermined distance during the terminal portion of the clamp-down operation to compress the positioning means.

3,395,928
SNOW SKI WITH PORCELAIN RUNNING SURFACE
Barney Eglit, 925 S. Mansfield, Los Angeles, Calif. 90036
Filed Mar. 17, 1966, Ser. No. 535,158
6 Claims. (Cl. 280—11.13)

A ski having an undersurface coated with porcelain enamel and forming a low friction running surface of the ski.

3,395,929
STEERING APPARATUS FOR TRAILERS
Homer Hoye, Box 128, New Bedford, Pa. 16140
Filed July 2, 1965, Ser. No. 469,257
8 Claims. (Cl. 280—81)

There are two spaced axles on the trailer each mounted beneath rotatable plates which are in turn each mounted to the underside of the trailer by means of a king pin so that each plate, axle and the wheels thereon may turn together. The axles are located rearwardly of their corresponding king pin so that turning forces from a tractor will cause the axles and wheels to turn differentially in yaw. Rigid stabilizing rods interconnect the two rotatable plates. Suspension means are provided for each axle and are mounted beneath the rotatable plates to turn therewith.

3,395,930
TILTABLE STEERING WHEEL
Jerry E. Morgan, Clarendon Hills, Ill., assignor to International Harvester Company, a corporation of Delaware
Filed Mar. 7, 1966, Ser. No. 532,443
7 Claims. (Cl. 280—87)

A hydrostatic steering system having a tiltable steering wheel operatively affixed through a flexible connection to a rigidly mounted control pump forming a portion of a conventional hydrostatic steering circuit so that the hydraulic components of the circuit are isolated from and unaffected by tilting of the wheel.

3,395,931
HYDRO-PNEUMATIC SUSPENSION DEVICES PARTICULARLY FOR AUTOMOBILE VEHICLES
Jean Piret, Vernouillet, France, assignor to Société anonyme: Simca Automobiles, Paris, France
Filed Sept. 3, 1965, Ser. No. 484,994
Claims priority, application France, Sept. 8, 1964, 987,384; Aug. 6, 1965, 27,603
18 Claims. (Cl. 280—124)

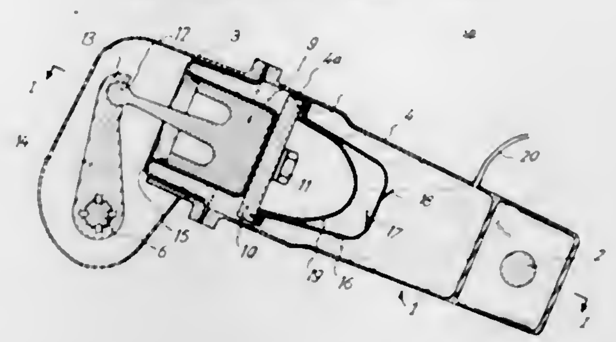

A hydro-pneumatic suspension device for an automobile vehicle having a hollow, wheel supporting arm, one end of which is pivoted on a pivot axle fixed to the vehicle and the other end of which has a wheel axle mounted thereon. The hollow arm includes internally a piston connected to the vehicle and movable in a rigid enclosure filled with liquid in fluid communication with a deformable enclosure filled with a constant mass of fluid. Movement of the arm causes movement of the piston and subjects the deformable enclosure to the pressure variations produced by the movement of the piston.

3,395,932
LOAD TIE-DOWN APPARATUS
George W. Meyers, 222 S. 8th St., Redmond, Oreg. 97756
Filed Jan. 3, 1966, Ser. No. 518,237
8 Claims. (Cl. 280—179)

Apparatus for exerting a resilient pulling force on a tie element, comprising a pair of telescoped members, one of which has means on its outer end for connecting the tie element thereto. The other member is anchored to a base, and a resilient element is arranged to urge the two members to telescope toward each other, whereby a resilient force is placed on the tie element. Force exerting means, which can be fluid pressure operated, is connected with the members and is operable remotely to urge them apart against the force of the resilient element, to thereby create slack so that the tie element can be connected to said one member.

3,395,933
PORTABLE HITCH
Donald A. Childs, R.D. 1, Painted Post, N.Y. 14870
Filed Oct. 10, 1966, Ser. No. 585,480
1 Claim. (Cl. 280—457)

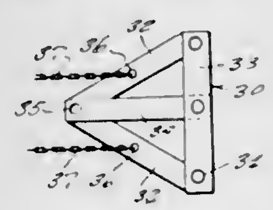

A portable hitch for use between an automobile and trailer, the hitch including a T-shaped frame having diagonal arms connected between the terminal ends of the T-shaped frame, and each of the arms having a central opening which one end of a chain may be connected for providing additional securement to the trailer.

3,395,934
FITTINGS FOR HIGH PRESSURE FLUID LINES
José Rosán, Rancho San Juan, San Juan Capistrano, Calif. 96275, and Milan Novakovich, 215 Apolena Ave., Balboa Island, Calif. 92662
Filed Oct. 22, 1965, Ser. No. 502,081
9 Claims. (Cl. 285—23)

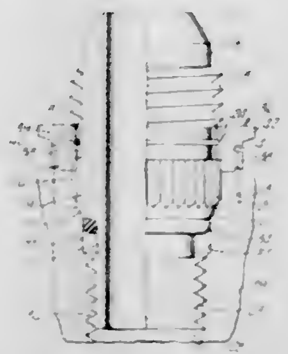

This invention provides a fluid fitting which is locked against loosening due to vibration by means of a coacting serrated locking ring which is temporarily rigidly secured to the body of the fitting so as to provide an integral unit. The fluid fitting of the invention provides a positive seal by use of a beveled metal-to-metal seal and an O-ring seal in conjunction therewith. The invention further provides means for limiting the axial displacement of the lock ring to a uniform depth and a means for removing the same in the event the fitting is replaced or repaired.

3,395,935
STRIKE PLATE
Raymond A. Rosenberger, 53 W. Colorado St., St. Paul, Minn. 55107
Filed Mar. 7, 1967, Ser. No. 625,906
3 Claims. (Cl. 292—341.13)

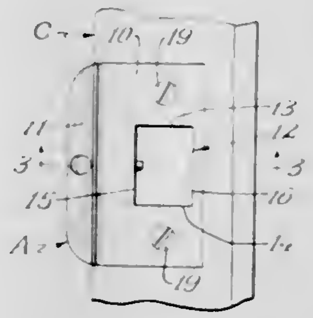

The invention consists of a strike plate having a curved or flanged lip along one edge. The plate includes an intermediate aperture for accommodating the end of the latch bolt. A lug is provided on the rear surface of the plate between the plate aperture and the curved lip. The lug is provided with a threaded aperture extending therethrough between the aperture and the curved lip. The threaded aperture has its axis on a plane generally parallel to the surfaces of the plate and on a plane normal to these surfaces and at right angles to the edge of the plate aperture nearest the curved lip. An adjustment bolt extends through the lug and against the latch bolt, to hold the door tightly closed. The curved lip, which acts to cam the latch bolt into retracted position as the door closes, is provided with an aperture which provides access to the adjustment bolt for adjusting the bolt while the plate is in place upon the door jamb.

3,395,936
COMBINATION TRAILER AND PICNIC TABLE
Robert G. Nicolli, 2451 Pinetree, Trenton, Mich. 48183
Filed Aug. 15, 1966, Ser. No. 572,482
5 Claims. (Cl. 296—23)

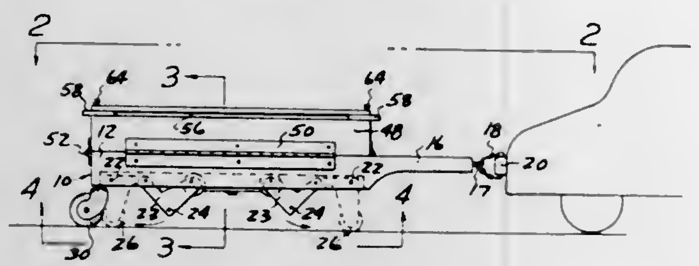

A trailer that can be converted to a picnic table and benches by extendable members connected to the trailer frame that raise the trailer floor to table height, and trailer sides that pivot out to bench height. The sides are locked by members that pivot into support position when used as benches.

3,395,937
TRUCK ASSEMBLY
William H. Hoyerman, Deerfield, Ill., assignor to General Body Sales Corporation, Chicago, Ill., a corporation of Illinois
Filed Oct. 24, 1966, Ser. No. 588,888
6 Claims. (Cl. 296—28)

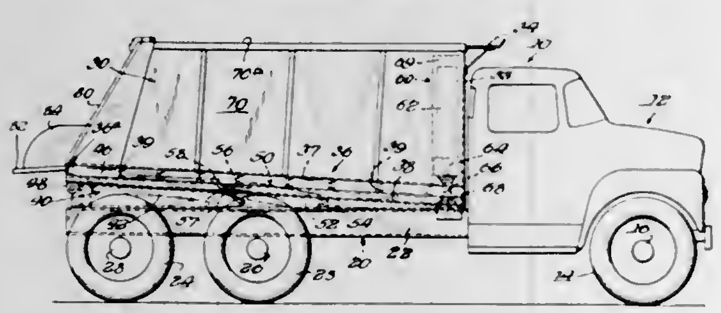

1. A truck assembly for transporting a load of material comprising, in combination: an elongate truck chassis having longitudinally spaced front and rear axles for receiving ground-engaging wheels; a load-carrying truck body joined to the rearward portion of said chassis above said rear axle, said body including a reinforced floor structure of substantial longitudinal extent having longitudinal outer side edges and further having forward and back-transverse edges positioned forwardly and rearwardly respectively of said rear axle; a first wall member rigidly secured to said floor structure adjacent said forward edge and extending transversely across said floor structure to thereby define the front wall of said truck body; a pair of second wall members rigidly connected along said outer sides of said floor structure and having substantially the same longitudinal extent as said floor structure, said second wall members being joined to said front wall adjacent said outer sides of said floor structure to define the maximum width of said load-carrying body adjacent said forward edge, said second members further being transversely tapered so as to gradiently converge with respect to each other toward said rear edge of said floor structure to thereby define the minimum width of said body adjacent said rear edge, where said second wall members define transversely tapering side walls for said truck body; a tailgate member secured to said floor structure adjacent said rear edge and extending transversely between said side walls, said tailgate being longitudinally inclined with respect to said floor structure and joinable to said side walls so as to taper forwardly from said rear edge of said floor structure; and floor tapering means joined to said chassis and supporting said floor structure in a forwardly tapered position with said forward edge substantially below said rear edge, whereby said transversely tapering side walls and said forwardly tapering floor structure and tailgate member substantially increase the load-carrying capacity of the forward portion of said truck body with respect to the capacity of the rearward portion of said body and thereby distribute a substantial portion of the gross weight of a load in said body onto said front axle by shifting the center of gravity of said load forwardly of said rear truck axle.

3,395,938
PIVOTING SKI CHAIR SEAT FOR TRAMS
Tony R. Sowder, 814 E. Grace Ave., Spokane, Wash. 99207
Filed Nov. 25, 1966, Ser. No. 597,151
6 Claims. (Cl. 297—333)

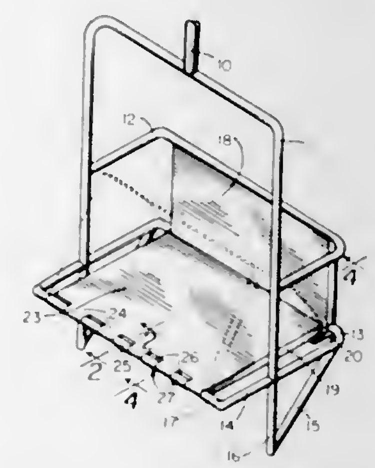

1. In a tram chair of the type having a peripheral frame with members at least at its forward and rearward seat extensions, a pivotably mounted seat including:
a rigid seat member pivotably carried by the forward member of the chair frame at the forwardmost edge of the seat member;
means yieldably biasing the rearward part of said seat member to an upturned position; and
means of supporting the seat member in a substantially horizontal position against downward motion.

3,395,939
HYDRAULIC CYLINDER AIR BLEED EXTENSION CONDUIT AND VALVE THEREFOR
John B. Curcio, Hazelton, Pa., assignor to Montone Manufacturing Company, a corporation of Pennsylvania
Filed Sept. 27, 1966, Ser. No. 582,289
7 Claims. (Cl. 298—22)

An extension bleed conduit having one end communicated with a bleed port in the upper end of an upstanding elongated extendable fluid motor connected between the frame and upper forward portion of the dump load bed of a dump truck of the type whose forward upwardly swingable dump load bed end includes a forwardly and downwardly opening recess in which the upper end of the extendable motor and the bleed port is disposed. The extension bleed conduit is of sufficient length to extend the bleed port in the upper portion of the downwardly opening recess to a forward lower portion of the dump load bed.

3,395,940
LATERAL AUGERING MINER WITH A FLAT LOOP CONVEYOR
William G. Young and Frederick G. Horning, Salem, Ohio, assignors to The Salem Tool Company, Salem, Ohio, a corporation of Ohio
Filed May 6, 1965, Ser. No. 453,622
14 Claims. (Cl. 299—56)

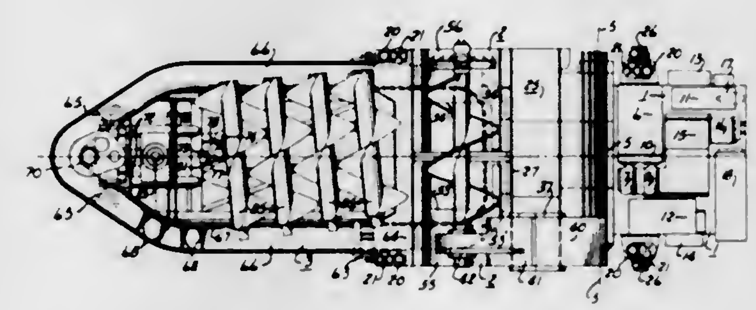

1. An auger mining machine having a main frame including a mid frame and supported on independently operable propulsion mechanism with quadrangularly disposed jacks to raise the machine above the ground surface to support and position a rotary auger mining mechanism with a rotary drive movable by a feeding mechanism to mine in either direction laterally of a pan on said mid frame and deliver the mine material to the mine face, extendable and retractable guide plates slidably supported to move laterally in either direction on said pan, double acting cylinders supported on said mid frame to independently move the guide plates for supporting the auger mining mechanism in the lateral direction of mining.

3,395,941
ROTARY AUGER MINING BARREL HEAD
William G. Young and Frederick G. Horning, Salem, Ohio, and William D. Carothers, Carnegie, Pa., assignors to The Salem Tool Company, Salem, Ohio, a corporation of Ohio
Filed July 29, 1965, Ser. No. 475,688
15 Claims. (Cl. 299—90)

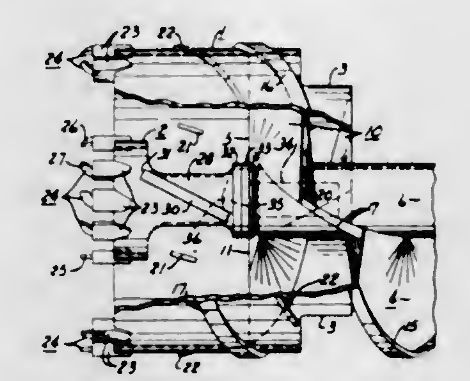

The rotary auger mining head disclosed herein is provided with an outer cylindrical barrel cutter mounted on an auger section having a forwardly open shank socket and a demountable inner cutter head with a passage therethrough and bits on their forward arcuate edges for cutting annular concentric kerfs and kerf cleaning fingers with a drive stem for axial insertion in the socket and the inner cutter secured to the end of the drive stem to be mounted concentrically with the rotary axis of the auger section and a collar on said drive stem between the cutter and the end of the socket. The inner coaxial cutter is provided with a wedge breaker on its outer arcuate surface to enter the kerf and break the coal against the inner surface of the barrel. The inner cutter being a semicylindrical drum within inner and outer arcuate walls ending in leading and trailing edges and having their forward arcuate edges progressively stepped forward from the leading to the trailing edges of the semicylindrical drum. The inner cutter may be provided with two semicylindrical drums.

3,395,942
VEHICLE WHEEL
Joseph Laczko, 4916 N. Spaulding Ave., Chicago, Ill. 60625
Filed July 18, 1966, Ser. No. 565,816
4 Claims. (Cl. 301—63)

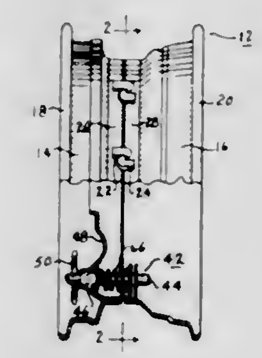

A vehicle wheel for a pneumatic tire in which the rim for the tire is constructed of two annular sections retained together by a plurality of spacer wedge-shaped, interlocking lugs and a plurality of locking fixtures having springs urging the two sections apart and the wedge-shaped lugs into firm interlocking relation.

3,395,943
METHODS OF AND APPARATUS FOR CARRYING GLASS SHEETS
Dennis Wilde, Hoscar, near Ormskirk, and Ronald Kenworthy, Ormskirk, England, assignors to Pilkington Brothers Limited, Liverpool, Lancashire, England, a corporation of Great Britain
Filed Oct. 11, 1966, Ser. No. 585,984
Claims priority, application Great Britain, Oct. 22, 1965, 44,898
13 Claims. (Cl. 302—31)

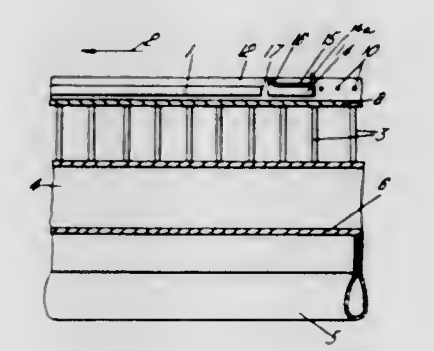

Sheets of glass are transported along a gaseous support by a translational gaseous flow applied to the glass in the general direction of advance of the glass, and opposed guiding forces are applied to the glass by directing at the glass opposed gaseous streams from either side of the path of travel.

3,395,944
APPLICATION VALVE
Richard C. Bueler, Glendale, Mo., assignor, by mesne assignments, to Wagner Electric Corporation, a corporation of Delaware
Filed July 8, 1966, Ser. No. 563,849
16 Claims. (Cl. 303—52)

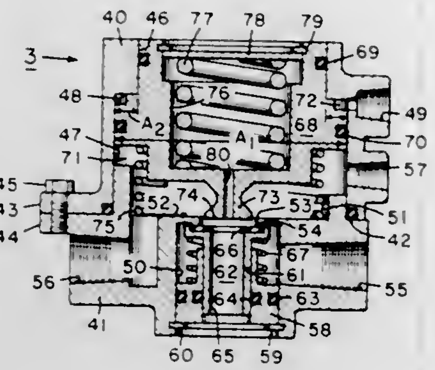

A control valve including an applied force member for establishing fluid pressure and having opposed differential reaction areas for subjection to the fluid pressure to establish a reaction force opposing the applied force movement of said member, one of said areas being selectively subjected to the atmosphere wherein the other of said areas is responsive to the established fluid pressure to establish another reaction force opposing the applied force movement of said member and being in a predetermined ratio with the first named reaction force.

3,395,945
METHOD OF CONVEYING FINE GRANULAR AND PULVEROUS MATERIAL BY GASEOUS MEANS
Hermann-Josef Kopineck, Dortmund-Kirchhorde, Herbert Muszkiewicz, Dortmund, and Claus Schlotter, Dortmund-Scharnhorst, Germany, assignors to Polysius G.m.b.H., Neubeckum, Germany
Original application June 21, 1965, Ser. No. 465,559, now Patent No. 3,314,731, dated Apr. 18, 1967. Divided and this application Dec. 27, 1966, Ser. No. 604,666
Claims priority, application Germany, June 20, 1964, H 53,034
4 Claims. (Cl. 302—66)

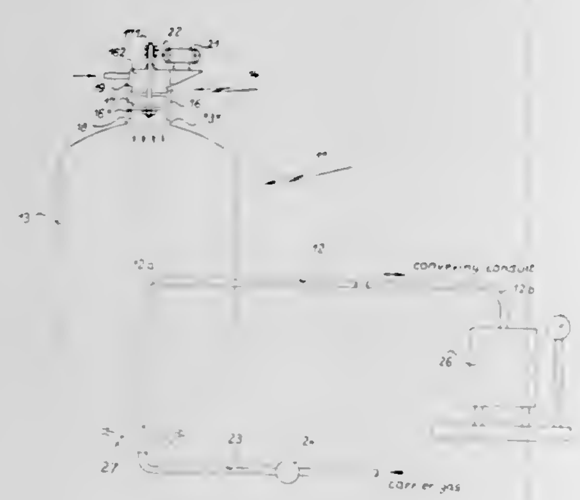

Method of conveying pulverous solid material with a gaseous vehicle in which the gas is passed upwardly through the pulverous material thereby entraining the pulverous material therein while simultaneously repetitive shock waves are supplied to the gas and pulverous material to increase the concentration of the pulverous material in the gas.

3,395,946
HYDRAULIC BRAKE CIRCUIT FOR DUAL VEHICLES
Jackson C. Medley, East Peoria, Donald L. Smith, Peoria, and Maurice F. Franz, East Peoria, Ill., assignors to Caterpillar Tractor Co., Peoria, Ill., a corporation of California
Filed Oct. 23, 1965, Ser. No. 502,916
2 Claims. (Cl. 303—2)

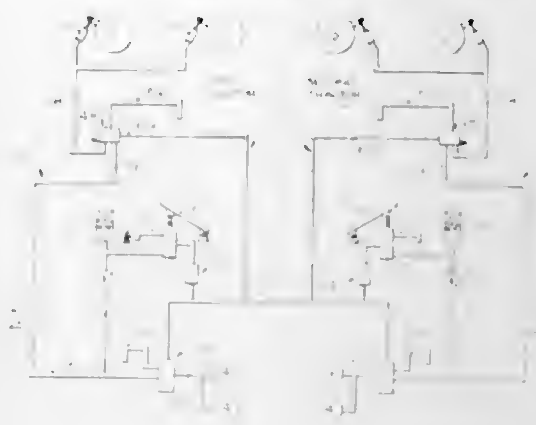

Brakes for two powered vehicles such as trucks or tractors, which are coupled for joint operation from either of two operating stations with a hydraulic circuit which enables the brakes for both vehicles to be applied from either operating station.

3,395,947
SLIDEWAY SYSTEM
Graham Maurice Brown, Daventry, England, assignor to Charles Churchill and Company, Limited, Birmingham, England, a British company
Filed May 28, 1965, Ser. No. 459,764
Claims priority, application Great Britain, June 3, 1964, 22,945/64
10 Claims. (Cl. 308—5)

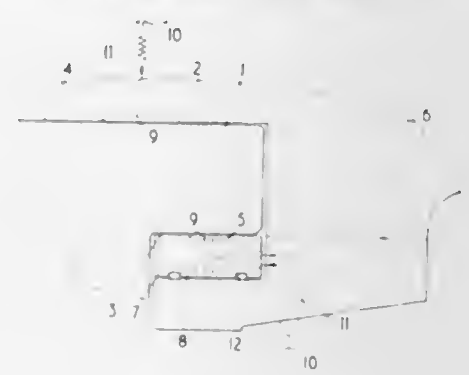

A pressure lubricated slideway system having one side of a floating, parallel-sided compensating member forming one of the bearing faces, and pressurized fluid being supplied to the other side of the compensating member to bias it.

3,395,948
HYDRAULICALLY BALANCED SLIPPER BEARING
Thomas D. H. Andrews, Cheltenham, England, assignor to Dowty Technical Developments Limited, Cheltenham, England, a British company
Filed Apr. 1, 1966, Ser. No. 539,483
Claims priority, application Great Britain, Apr. 10, 1965, 15,348/65
8 Claims. (Cl. 308—5)

A hydraulically balanced slipper bearing is disclosed comprising a backing member having a uniform bearing surface, a slipper having a slipper surface including a continuous land enclosing a recess of substantial area, the land being shaped to fit closely against the uniform bearing surface and the recess being of very shallow depth relative to the land, means for applying a holding force to the slipper to hold the land against the bearing surface, and an unrestricted passage having a diameter greater than the extent of said depth adapted to supply hydraulic liquid

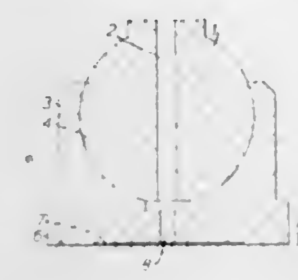

at pressure to the recess, the very shallow depth of the recess being such as to insure a substantial pressure gradient between the passage and the land.

3,395,949
GAS-BEARING ASSEMBLY
Leslie C. Kun, Williamsville, N.Y., assignor to Union Carbide Corporation, a corporation of New York
Filed July 16, 1964, Ser. No. 383,005
16 Claims. (Cl. 308—9)

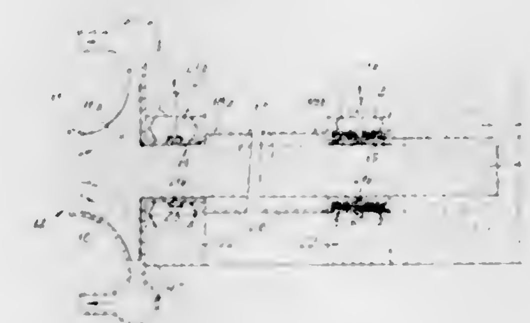

1. A gas bearing assembly comprising:
(a) a rotor having a rotatable shaft portion;
(b) means for imparting speed of at least 2000 r.p.m. to said rotor;
(c) a rigid sleeve primary support member surrounding at least a longitudinal section of said shaft portion and sized to provide a narrow annular space between the inner surface of said sleeve and the outer surface of said shaft;
(d) means for introducing sufficient gas into said annular space to for a stiff gas film which supports and radially positions said shaft from said sleeve;
(e) a multiplicity of chevron-shaped metal circular springs with their axes aligned parallel to the axis of shaft rotation, having inner edges contiguously associated with and in load-bearing relation to the outer surface of said sleeve as elastic support means;
(f) a rigid secondary support member for and contiguously associated with the outer edges of said chevron-shaped circular metal springs; and
(g) means for receiving at least part of the energy of rotation from said motor.

3,395,950
VEHICLE WHEEL HUB BEARING OIL BATH ADAPTOR
Harold A. Brandt, San Diego, Calif.; assignor of one-third to Roland L. Willett, San Diego, Calif., and one-third to James A. Tindal, Gardena, Calif.
Filed Mar. 14, 1966, Ser. No. 534,112
1 Claim. (Cl. 308—36.2)

1. A vehicle wheel hub bearing oil bath adaptor for adapting oil bath lubrication to existing vehicle wheel axles of the type having a main diameter portion, an outer reduced diameter portion for the mounting of a wheel hub thereon and an intermediately reduced diameter portion between said main diameter portion and said outer reduced diameter portion, said intermediately reduced diameter portion defining a first shoulder with said main diameter portion and a second shoulder with said outer reduced diameter portion, said adaptor comprising:

an adaptor member dimensioned for a snug fit over said intermediately reduced diameter portion, one end of said adaptor member being provided with an annular inwardly extending flange shaped to fit over said second shoulder and the other end of said adaptor member being provided with an annular outwardly extending flange for abutment with said first shoulder;

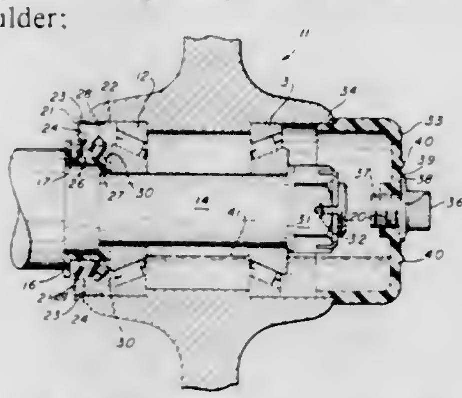

an annular seal adapted to encircle said adaptor member between the flanged ends thereof and in contact with the outer surface of said adaptor member to provide a frictional seal between said adaptor member and the wheel hub when the adaptor member is mounted on said axle, said seal also including an annular outwardly extending flange around the end thereof adjacent the outwardly extending flange of the adaptor member whereby said outwardly extending flanges facilitate positioning of the adaptor member and seal with respect to the axle and the wheel hub;

spring means carried by and encircling said annular seal intermediate the ends thereof for producing uniform constant contact between the seal and said outer surface of the adaptor member;

and a hub cap dimensioned for a snug press fit within the wheel hub when mounted on said axle on an opposite end of said hub from said annular seal, said hub cap including an oil fill port positioned for axial alignment with the axle and threaded plug means for closing said port against the admission of external fluids, said plug means including an external vent channel formed along the length of the threaded portion of said plug means to permit the venting of undesired buildup in internal pressure.

3,395,951
SELF-ALIGNING BUSHING
Victor L. Barr, Jenkintown, and Henry K. Schmidt, Levittown, Pa., assignors to Roller Bearing Company of America, West Trenton, N.J., a corporation of New Jersey
Filed Jan. 7, 1966, Ser. No. 519,352
9 Claims. (Cl. 308—72)

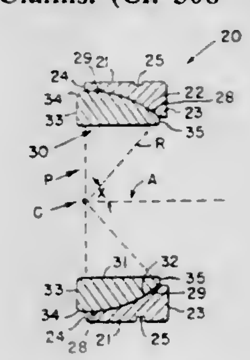

A self-aligning load-bearing bushing having high unidirectional thrust capacity relative to its radial capacity

is disclosed. The bushing comprises a pair of hardened steel annular races sized for interference-free interfitting assembly, and readily separable after assembly. The outer race has a cylindrical outer surface and a spherical concave interior surface. The curvature of the spherical concave interior surface is described about a center point which lies on the longitudinal center axis of the bushing and the entire interior surface of the outer race lies to one side of the imaginary plane which passes through the center point of curvature perpendicular to the longitudinal center axis of the bushing. The inner race has a cylindrical interior surface and a converging spherical exterior surface sized and curved to interfit with the interior surface of the outer race.

3,395,952
BEARING AND THE LIKE CARRIER MEANS FOR MOVABLE MEMBERS
Paul C. F. Deffrenne, Geneva, Switzerland, assignor to Mecanorga S.A., Geneva, Switzerland
Filed Jan. 10, 1965, Ser. No. 519,778
Claims priority, application Switzerland, Feb. 8, 1965, 1,660/65
6 Claims. (Cl. 308—122)

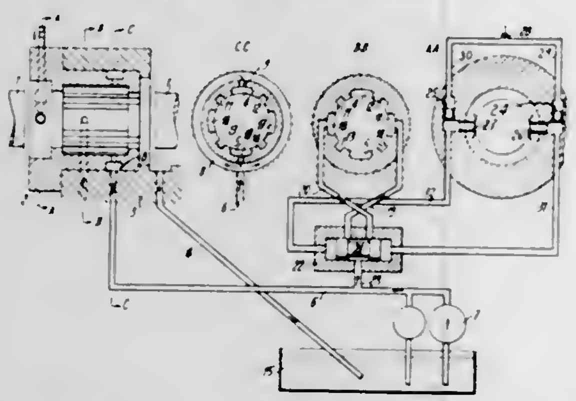

Carrier means for a movable member which includes a support provided with pressure chambers facing the periphery of the movable member, and a circuit of fluid under pressure feeding the pressure chambers to urge the movable member into a predetermined position with reference to the stationary member with a clearance therebetween. The circuit is controlled by a pneumatic system including a supply of compressed air independent of said fluid circuit. The flow of compressed air between cooperating upstream and downstream nozzles acts on a distributor in accordance with the spacing between the downstream nozzle and the movable member to thereby urge the distributor into a position for which the movable member is returned to its predetermined position.

3,395,953
DEVICE FOR POSITIONING SEALING MEANS FOR AN ANTIFRICTION BEARING
Alfred Pitner, Paris, France, assignor to Nadella S.A., Rueil-Malmaison, Hauts-de-Seine, France, a French body corporate
Filed Oct. 12, 1964, Ser. No. 403,302
Claims priority, application France, Oct. 17, 1963, 950,966
10 Claims. (Cl. 308—187.1)

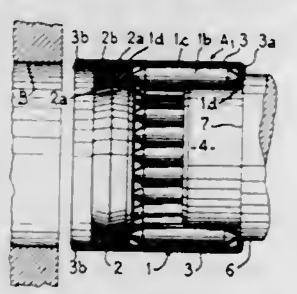

A temporary preassembly for engaging a rolling bearing and annular sealing means therefor with a cylindrical surface of a machine part, the preassembly consisting of a subassembly including the rolling bearing and the annular sealing means therefor, and an additional temporary sleeve coaxial and circumferentially coextensive with and engaging the subassembly, retaining means extending radially from each end of the sleeve for temporarily retaining the subassembly, the retaining means being yieldable at one end of the sleeve to allow the subassembly to be axially disengaged as a unit from the sleeve without permanent deformation of the subassembly.

3,395,954
PRESENSITIZED BALL BEARINGS
Philippe Boillat, Bienne, Switzerland, assignor to Roulements Miniatures, S.A., Bienne, Switzerland, a Swiss corporation
Filed Aug. 1, 1966, Ser. No. 569,154
Claims priority, application Switzerland, Aug. 13, 1965, 11,414/65
5 Claims. (Cl. 308—183)

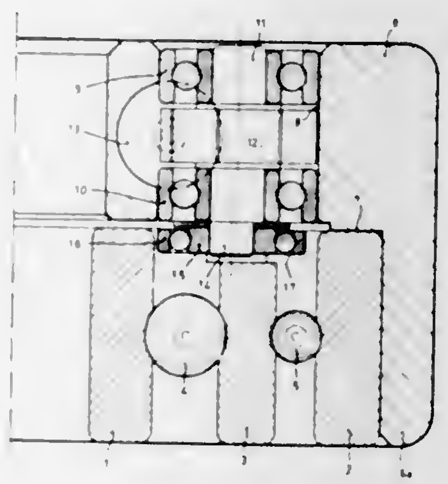

This disclosure concerns a ball bearing which has an interior ring, an exterior ring and a middle ring, at least one set of balls between the interior ring and the middle ring and at least one set of balls between the exterior ring and the middle ring with means for moving the middle ring with a rotary oscillating movement about the axis of the bearing, characterised by the fact that these means comprise an actuation device rotated about an axis parallel to the axis of the bearing and having an eccentric part engaging in a housing formed at the edge of the middle ring.

3,395,955
SEALS BETWEEN ROTATING PARTS
Stanley Walter Mansell and Francis Charles Ivor Marchant, Bristol, England, assignors to Bristol Siddeley Engines Limited, Bristol, England, a British company
Filed July 28, 1966, Ser. No. 568,632
Claims priority, application Great Britain, July 28, 1965, 32,302/65
7 Claims. (Cl. 308—187)

1. A combination of relatively rotatable first and second parts, relatively rotatable coaxial first and second sealing elements with cooperating primary sealing faces which are separable by relative axial movement of the sealing elements, means restraining rotation of each element relatively to a respective one of the parts, secondary sealing means acting between each sealing element and its respective part, a space extending from one side of the primary sealing faces to one side of a seal member acting between the relative rotatable parts, the other side of the seal member being exposed to ambient fluid, and the space being bounded in part by one side of a flexible wall, the opposite side of which is exposed to the ambient fluid.

3. A combination according to claim 1, in which the space is full of an intermediate fluid, and one of the sealing elements is axially slidable under pressure of the intermediate fluid so as to clamp the primary sealing faces together and prevent escape of the intermediate fluid between the sealing faces whenever the ambient fluid is at a pressure higher than the pressure on the other side of the primary sealing faces.

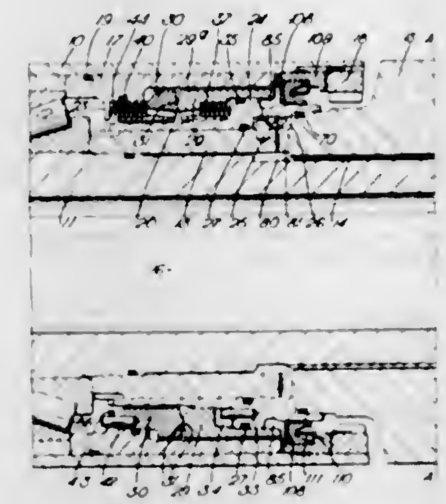

4. A turbodrill including a combination according to claim 3, the two parts having portions which in use are exposed to drilling mud, and a lubricated bearing between the parts, the primary sealing faces lying between the bearing and the mud, and the seal member lying between the primary sealing faces and the mud, the intermediate fluid being oil, which, via the flexible wall is subjected to the pressure of the mud.

3,395,956
QUICK DETACHABLE MOUNTING FOR BEARING RACES
Walter Fisher, South Bend, Ind., assignor to The Torrington Company, Torrington, Conn., a corporation of Maine
Continuation-in-part of application Ser. No. 281,210, May 17, 1963. This application Nov. 1, 1966, Ser. No. 600,318
14 Claims. (Cl. 308—236)

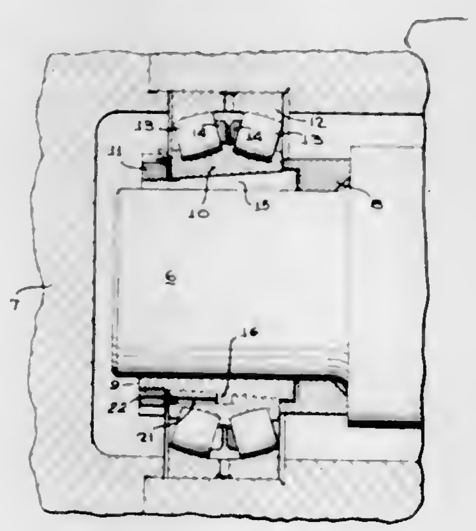

This invention is directed to providing a bearing inner ring, having a peripheral groove on the inner surface thereof, which is adapted to facilitate removal of the ring from either a tapered sleeve on a shaft, or from a tapered shaft. The removal groove is eccentrically machined in the ring, to have a point of greatest depth and extends about the inner periphery of the ring, diminishing in depth toward closed ends of the groove, leaving an uncut portion of the ring between closed ends of the groove. This uncut portion facilitates the use of the ring with a tapered sleeve, having a longitudinal slot, such that when a ring is used in conjunction with a split sleeve, the slot in the sleeve communicates with the uncut portion of the inner ring surface, and the removal groove of the ring is not in communication with the slot of the sleeve. A principal advantage of the invention is that the removal groove may be machined in the ring by a simple rotating cutting tool, but yet is discontinuous about the periphery of the ring.

3,395,957
RADIATOR CAP REMOVER
Robert S. Peele, 8 Prancer Ave., Greenville, S.C. 29605
Filed Sept. 8, 1966, Ser. No. 578,069
3 Claims. (Cl. 312—1)

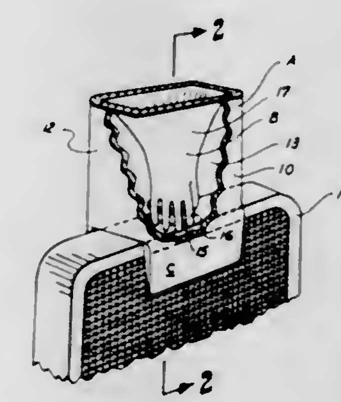

An enclosure having a glove portion which fits on top of a radiator for aiding an attendant in removing the radiator cap from the radiator, while protecting him from escaping steam and hot water.

3,395,958
DISPENSER FOR DENTAL INGOTS
Richard Hospes, Huntington, N.Y., assignor to Julius Aderer, Inc., Long Island City, N.Y., a corporation of New York
Filed Mar. 13, 1967, Ser. No. 622,786
10 Claims. (Cl. 312—61)

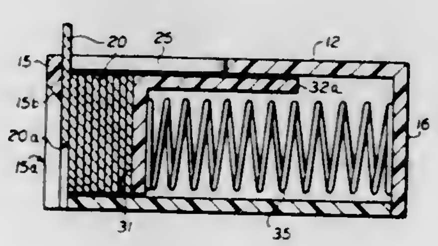

A dispenser for dental ingots having an enclosure for holding a plurality of stacked flat dental ingots, and a spring-driven plunger for advancing the stack as each leading ingot is slid edgewise from the front of the stack by finger-contact until it is emitted from the dispenser. A window is provided adjacent the ingot dispensing aperture, so that the ingots remaining in the dispenser can be viewed. The plunger is formed so as to hide the spring from view through the window, to allow no more than a predetermined maximum quantity of ingots to be initially inserted into the dispenser, and to allow a quick visual estimate through the window of the proportion of initial

ingots remaining in the dispenser by the ratio of visible ingots to visible plunger.

3,395,959
COLLAPSIBLE COMBINATION CABINET AND WORK PLATFORM
Ralph B. White, 2526 Castle Drive, Fort Wayne, Ind. 46806
Filed Feb. 16, 1967, Ser. No. 616,566
10 Claims. (Cl. 312—317)

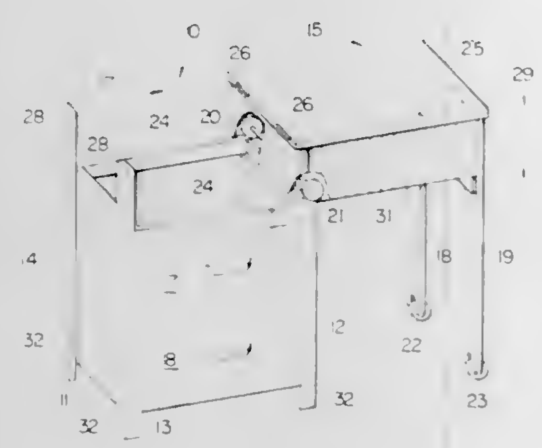

A collapsible cabinet and work platform having a base and a laterally extendible frame mounted thereon. A top having a work surface mounted on the frame. The top can be folded over the base to provide an extended and substantially continuous work surface when the frame is in its extended position. The cabinet is especially adapted to be a sewing center in which the base is provided with drawers, a sewing machine is mounted on said frame and said frame when extended provides a kneehole directly beneath the sewing machine.

3,395,960
LIGHT MODULATOR
Paul T. Chang, Poughkeepsie, and Kurt M. Kosanke, Wappingers Falls, N.Y., assignors to International Business Machines Corporation, New York, N.Y., a corporation of New York
Filed May 28, 1964, Ser. No. 370,932
6 Claims. (Cl. 350—150)

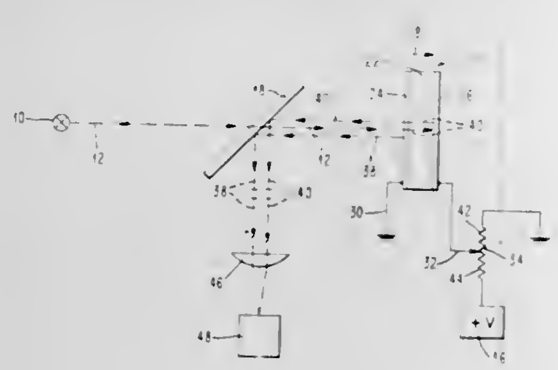

Light modulator apparatus acts on linearly polarized light to reflect one component and to selectively alter the polarization of a second component which is transmitted through the apparatus. A birefringent electro-optical crystal is responsive to electrical signals applied across it to alter the polarization. Full reflective mirror means are positioned to reflect the second component back through the birefringent crystal for further polarization alteration. Dependent on the applied electrical signals the two components combine and destructively interfere with one another.

3,395,961
LIGHT DEFLECTOR
John F. Ready, Minneapolis, Minn., assignor to Honeywell Inc., a corporation of Delaware
Filed Oct. 28, 1964, Ser. No. 407,098
12 Claims. (Cl. 350—160)

Deflection of a low intensity light beam on passage through a dielectric material having an index of refraction that varies with the strength of an applied electric field. The electric field is provided by a high intensity

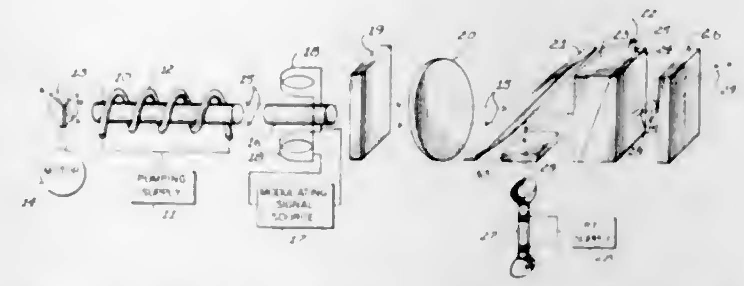

laser beam that is modulated to vary the electric field intensity and correspondingly the index of refraction of the dielectric material.

3,395,962
SUPERACHROMATIC OBJECTIVE
Maximilian J. Herzberger, Zurich, Switzerland, and Nancy R. McClure, Rochester, N.Y., assignors to Eastman Kodak Company, Rochester, N.Y., a corporation of New Jersey
Filed May 12, 1965, Ser. No. 455,197
2 Claims. (Cl. 350—215)

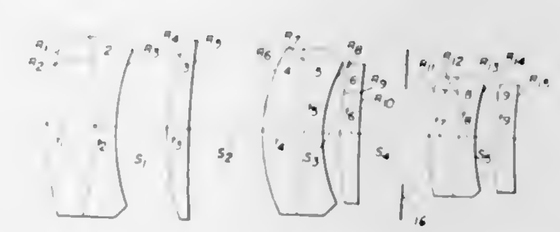

A photographic objective composed of three triplets, each having an airspace between the second and third elements thereof. Each triplet is individually corrected by choice of glasses for chromatic aberrations at four wavelengths.

3,395,963
OPTOELECTRIC DATA READOUT DEVICE
Marvin Ackerman, Sunnyvale, Calif., assignor to Hewlett-Packard Company, Palo Alto, Calif., a corporation of California
Filed Nov. 15, 1965, Ser. No. 507,869
10 Claims. (Cl. 250—219)

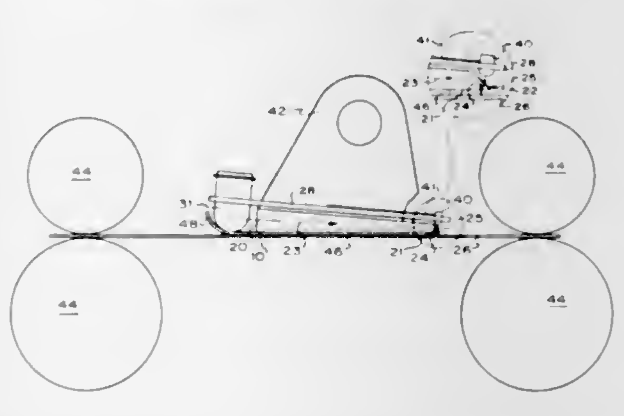

1. An optoelectric readout device having at least one channel for reading out information from an information carrying element having a reflectance indicative of the information to be read out, said device comprising:

a source of radiation;

a radiation control prism including first, second and third optical paths and one surface forming an interface with an adjacent medium of dissimilar optical characteristics, said prism being positioned for receiving radiation from said source and transmitting it along said first optical path to said interface at more than the critical angle for said interface so that it is largely reflected along said second optical path to an information carrying element having a reflectance indicative of the information to be read out and from which some of the incident radiation is reflected along said third optical path back to said interface at less than the critical angle so that it is transmitted therethrough;

a radiation-sensitive detector for each channel of said device, said detector being poistioned adjacent to said interface for monitoring the radiation transmitted therethrough and producing an electrical signal indicative of the reflectance of the information carrying element.

3,395,964
SPECTACLE MOUNTING WITH BIASED NOSE BRIDGE AND TEMPLE PIECES
René Niéder dit Chartrice, Le Cannet, Alpes-Maritimes, France
Filed Apr. 3, 1964, Ser. No. 357,176
2 Claims. (Cl. 351—63)

Folding eyeglasses having a force-exerting bridge and also force-exerting hingedly mounted temporal sides which, in the unfolded condition, firmly grip the wearer at the bridge of his nose and at his temples to thereby hold the eyeglasses in place.

3,395,965
SMALL-SIZED CINEMATOGRAPHIC CAMERA DEVICE
Haruo Teshi and Fumio Sakaki, Nagoya, Japan, assignors to Elmo Company Limited, Mizuho-ku, Nagoya, Japan
Filed July 21, 1965, Ser. No. 473,707
Claims priority, application Japan, July 27, 1964, 39/42,076
2 Claims. (Cl. 352—221)

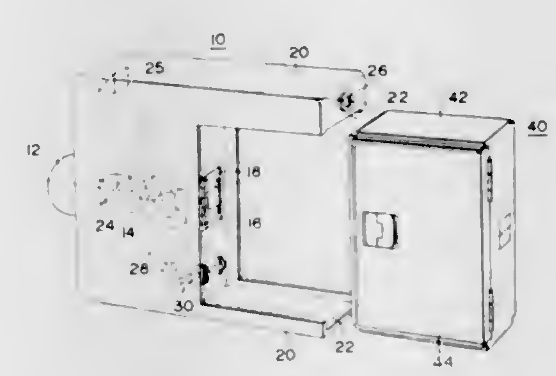

A camera in which the main body is provided with a plurality of interchangeable aperture plates, one for each of interchangeable film magazines, different in configuration and outside dimension from one another, and magazines for loading cinefilms different in frame size and available form are provided with the corresponding openings for engagement with the associated aperture plates. For cinefilm having different positions of perforations relative to a frame, an intermittent feed mechanism within the main camera body includes a plurality of feed claws and a plurality of cams for them and the main camera body is provided on the rear wall with one hole associated with each claw while each magazine is provided on the front wall with the projection. With one magazine connected to the main camera body, the projection on that magazine is inserted into one hole determined by the position of perforations relative to a frame on the cinefilm involved, and brings the feed claw associated with that hole into its operative position.

3,395,966
COMBUSTION APPARATUS
Karl Borje Olsson, Smedjevagen 9, Nacka, Sweden
Filed May 25, 1967, Ser. No. 641,282
Claims priority, application Netherlands, May 27, 1966, 6607422
5 Claims. (Cl. 431—22)

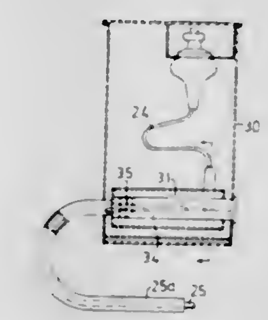

Combustion apparatus in which a mixture of air and fuel is sucked through an inlet system to a combustion chamber and the combustion gases leave through an exhaust duct at super-atmospheric pressure. A gas leakage duct surrounds the exhaust duct to form a leakage collecting chamber which through a conduit is connected to the inlet system and a pressure responsive member actuating an alarm device and/or a member for stopping the apparatus when gas leakage occurs.

3,395,967
METHOD AND DEVICES FOR SUPPLYING A MAGNETOHYDRODYNAMIC GENERATOR
Claude Karr, Paris, France, assignor to Commissariat à l'Energie Atomique, Paris, and Institut Francais du Petrole des Carburants et Lubrifiants, Rueil-Malmaison, Hauts-de-Seine, France
Filed Jan. 26, 1965, Ser. No. 428,078
Claims priority, application France, Feb. 8, 1964, 963,123
9 Claims. (Cl. 431—1)

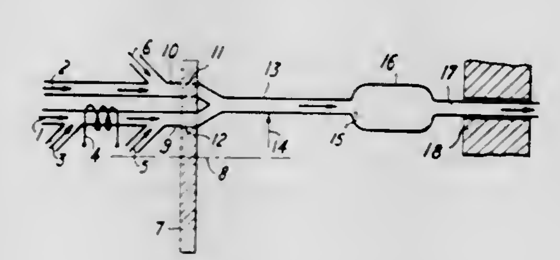

1. Method of temperature modulation of a gaseous mixture for supply to a magnetohydrodynamic generator.

the steps of preparing at least two fuel mixtures having different compositions then preheating the mixtures to different temperatures and then continuously and alternately admitting each of said mixtures within a combustion chamber supplying said magnetohydrodynamic generator.

3,395,968

BURNER CONTROL APPARATUS

John W. Mobarry, Edina, and James S. Warren, Minnetonka, Minn., assignors to Honeywell Inc., Minneapolis, Minn., a corporation of Delaware

Filed Feb. 13, 1967, Ser. No. 615,399

8 Claims. (Cl. 431—45)

A non-recycling, timed ignition burned control apparatus having a flame detector, a bimetal safety lockout timer, a bimetal ignition timer, and a burner control relay; in which a series circuit for energizing the safety lockout timer heater includes a normally-closed switch of the flame detector and a normally-open switch of the relay, and a series circuit for energizing the relay winding

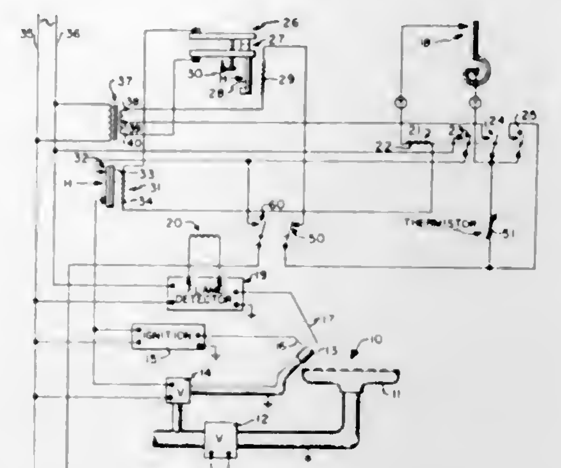

and the ignition timer heater includes the same normally-open switch of the relay.

CHEMICAL

3,395,969

METHOD FOR DYEING POLYOLEFIN SHAPED ARTICLES

Shogo Matsuda, Takatsuki-shi, and Kenzo Takagi, Hirakata-shi, Japan, assignors to Asahi Kasei Kogyo Kabushiki Kaisha, Osaka, Japan, a corporation of Japan

No Drawing. Filed Dec. 16, 1964, Ser. No. 418,876

Claims priority, application Japan, Dec. 28, 1963, 38/70,496, 38/70,498

8 Claims. (Cl. 8—31)

An improved process for dyeing shaped articles of polyolefin containing a polytriazole compound, wherein the articles are treated with a monoepoxy compound containing a halogen atom or a double bond in the molecule, before or during the dyeing. By said treatment, the modifying agents in the polyolefin are significantly activated, and absorption and diffusion of a dye are readily carried out therein, and it has become possible to dye previously undyeable polyolefins. The colors dyed according to the present process are very fast. Acid, metallized, acid mordant and reactive dyes can be employed for the present process.

3,395,970

METHOD OF CARBONIZING POLYACRYLONITRILE IMPREGNATED CELLULOSE, CYANOETHYLATED CELLULOSE AND ACRYLONITRILE GRAFT COPOLYMERIZED CELLULOSE TEXTILES

Greville Machell, Spartanburg, S.C., assignor to Deering Milliken Research Corporation, Spartanburg, S.C., a corporation of Delaware

No Drawing. Filed Oct. 30, 1963, Ser. No. 319,999

8 Claims. (Cl. 8—116.2)

1. A method for the preparation of low weight loss carbonized textile materials comprising treating a cellulose textile material with acrylonitrile so that said cellulose textile material will have a pickup of about at least 5% acrylonitrile based on the weight of the initial textile material to produce a dry cellulose textile material selected from the group consisting of cellulose impregnated with polyacrylonitrile, cyanoethylated cellulose and cellulose graft copolymerized with acrylonitrile and then carbonizing the acrylonitrile treated cellulose textile material by heating said textile material in a substantially inert atmosphere that does not support combustion at a temperature in the range of about 300° C. to about 3000° C.

3,395,971

PRODUCTION OF FIBROUS CELLULOSE ETHERS USING IODIDE SALTS AS CATALYSTS

Ricardo H. Wade, Metairie, and Clark M. Welch and Howard P. Bennett, New Orleans, La., assignors to the United States of America as represented by the Secretary of Agriculture

No Drawing. Filed Jan. 29, 1964, Ser. No. 341,141

14 Claims. (Cl. 8—120)

1. A process for etherifying fibrous cellulosic material comprising:

(a) wetting the said fibrous cellulosic material with an aqueous solution containing an alkali metal hydroxide and an alkali metal iodide, and

(b) reacting the wet cellulosic material with an organic chloride having at least one functional group of the structure

$$-\overset{R'}{\underset{R''}{\overset{|}{\underset{|}{C}}}}-Cl$$

where R' and R'' are selected from the group consisting of hydrogen, alkyl, cycloalkyl, aralkyl, aryl, alkenyl, cycloalkenyl, and alkynyl radicals.

3,395,972

METHOD OF CLEANING AND PURIFYING PARTICLE LADEN DISCHARGE STREAMS

Leslie C. Hardison, Chippewa Falls, Wis., assignor to Universal Oil Products Company, Des Plaines, Ill., a corporation of Delaware

Filed May 20, 1965, Ser. No. 457,436

13 Claims. (Cl. 23—4)

1. A continuous method for cleaning and purifying a processing zone discharge air stream containing combustible particulates, which comprises the steps of initially passing such stream from the processing zone through a moving heat resistant wire mesh filtering belt within a particulate removal zone discharging a resulting particle free stream from said removal zone, continuously passing a portion of said wire mesh filtering belt with deposited particles to a thermal burn-off zone and therein subjecting the belt to high temperature heating sufficient to effect the oxidation and removal of the deposited particles therefrom, continuously returning a cleaned portion of belt to said particulate removal zone while passing a resulting combustion gas stream from said burn-

off zone to a catalytic oxidation zone and therein contacting a pervious oxidation catalyst bed to provide oxi-

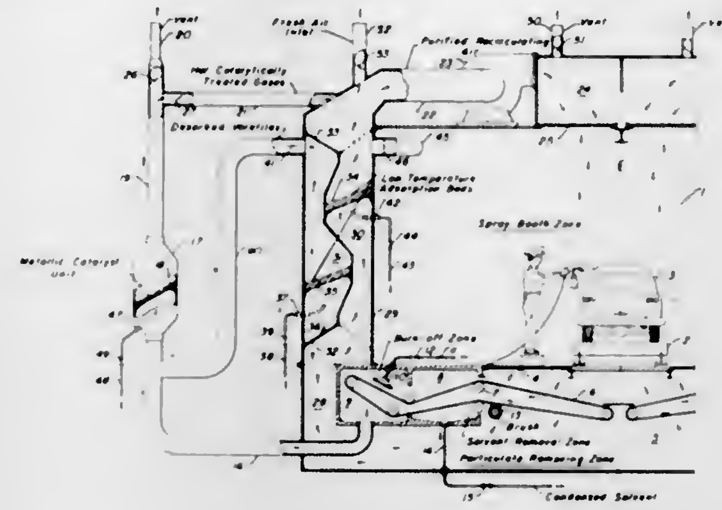

dation of entrained combustible constituents therein and a resulting unoffensive treated stream.

3,395,973

SEPARATION OF BERYLLIUM HALIDES FROM OTHER METAL HALIDES

Edgar C. Winegartner, Baytown, Tex., and David G. Walker, Madison, N.J.; said Winegartner assignor to Esso Research and Engineering Company

Filed Oct. 1, 1965, Ser. No. 491,923

9 Claims. (Cl. 23—15)

Beryllium is separated by contacting a mixture containing beryllium halide contaminated with other metal halides with an aromatic hydrocarbon solvent to form a solution of beryllium halide which is separated from the other metal halides which are in suspension; beryllium is recovered from the solution. Beryllium-containing ores may be treated with halogens to form the halides which are then dissolved in the solvent.

3,395,974

FORMATION OF VANADIUM TRICHLORIDE FROM VANADIUM TETRACHLORIDE

Ronald Berry, Swinton, Manchester, England, assignor to Magnesium Elektron Limited, Swinton, Manchester, England

No Drawing. Filed Sept. 13, 1965, Ser. No. 487,046

Claims priority, application Great Britain, Sept. 14, 1964, 37,490/64

3 Claims. (Cl. 23—17)

VCl_3 is prepared by decomposing VCl_4 in the presence of a catalytic amount of ICl, the mixture of VCl_4 and ICl being heated to remove chlorine, and thereafter distilled to remove unconverted VCl_4 and ICl, and recovering the remaining solid VCl_3.

3,395,975

PRECIPITATION OF BERYLLIUM FROM ORES

James K. Grunig, Butte, Mont., William C. Aitkenhead, Pullman, Wash., and William B. Davis, Anaconda, Mont., assignors to The Anaconda Company, New York, N.Y., a corporation of Montana

No Drawing. Filed Oct. 15, 1963, Ser. No. 316,474

11 Claims. (Cl. 23—18)

1. The process of extracting beryllium values from acid leachable beryllium-bearing material, the beryllium value content of which is soluble in mineral acid which comprises leaching said material with a mineral acid producing an acidic slurry of said material, filtering said slurry to produce a leach liquor, adding an alkali to said leach liquor to adjust the pH thereof to a value in the range from about 1.5 to about 4, heating said leach liquor in an autoclave at a temperature of from about 300° F. to 600° F. and at a pressure of from about 400 p.s.i. to about 800 p.s.i., filtering the autoclave leach liquor to produce a filtrate, and adding an alkali to said filtrate to bring it to a pH of about 7 thus precipitating values rich in beryllium.

3,395,976

PROCESS FOR THE SEPARATION OF ZIRCONIUM FROM HAFNIUM

Oskar Glemser, 10 Richard-Zsigmondy-Weg, Gottingen, Germany, and Adolf von Baeckmann, Leopoldshafen, near Karlsruhe, Germany; said von Baeckmann assignor to said Glemser

No Drawing. Continuation-in-part of application Ser. No. 22,093, Apr. 14, 1960. This application Dec. 18, 1962, Ser. No. 245,402

Claims priority, application Germany, Apr. 15, 1959, G 26,842

6 Claims. (Cl. 23—22)

The process for separating zirconium from hafnium by repeated liquid-liquid solvent extraction of the corresponding chloride salts, exemplified by distributing the chloride salts at about 20°–60° C. between

(1) an inorganic phase consisting of an aqueous chloride ion solution which is 2 N–13 N with respect to HCl and

(2) an organic phase of halogenated hydrocarbon containing a soluble amine having a molecular weight of 150–400 such as tribenzylamine;

physically separating the organic and inorganic phases and recovering the enriched zirconium and any residual hafnium from the organic phase by precipitation and recovering the organic solvent of said organic phase. The corresponding inorganic phase, with enriched hafnium concentration, is also recovered when desired.

3,395,977

ANHYDROUS MAGNESIUM CHLORIDE PRODUCTION

Murray Nadler, Morristown, N.J., assignor to Esso Research and Engineering Company, a corporation of Delaware

Filed Dec. 20, 1965, Ser. No. 515,054

6 Claims. (Cl. 23—91)

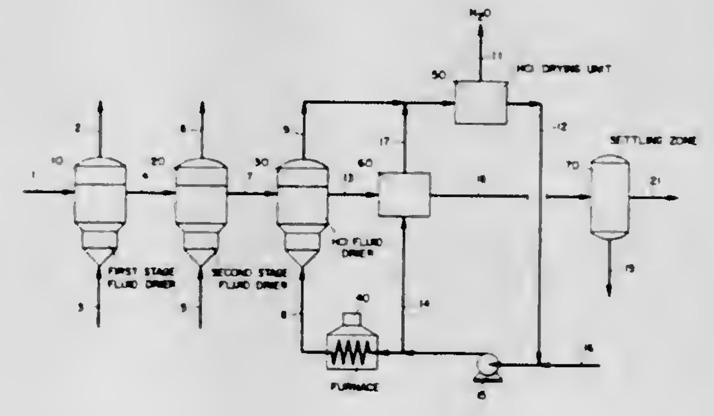

Integrated process for the production of anhydrous magnesium chloride from hydrated magnesium chloride containing about 6 molecules of water of hydration. In the first stage the water of hydration is reduced to about 4, in the second stage the water of hydration is reduced to about 2 and in a third stage substantially anhydrous magnesium chloride is produced. In all three stages the magnesium chloride particles are maintained in fluidized condition; in the first and second stages by inert gases and in the third stage by hydrogen chloride gas. In the fourth stage the magnesium chloride is maintained in a molten condition and hydrogen chloride bubbled therethrough to remove the final traces of moisture and in a fifth stage final traces of magnesium hydroxychloride are removed by settling.

3,395,978
METHOD OF REMOVING ALKALI METAL ARSENATE FROM A SOLUTION THEREOF CONTAINING ALKALI METAL ARSENITE AND ALKALI METAL CARBONATE
Giuseppe Giammarco, Porto Marghera, Venice, Italy, assignor to Montecatini Edison S.p.A., Milan, Italy, a corporation of Italy, and Vetrocoke Societá per Azioni, Venice, Italy
Continuation-in-part of application Ser. No. 264,591, Mar. 12, 1963. This application Sept. 21, 1966, Ser. No. 584,626
Claims priority, application Italy, Mar. 13, 1962, 5,373/62
5 Claims. (Cl. 23—53)

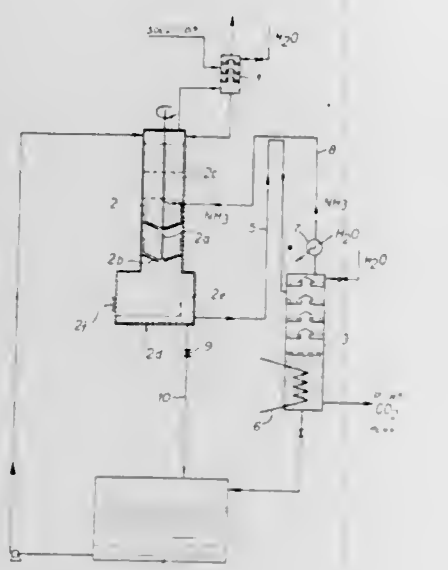

Alkali metal arsenate is precipitated from a solution from a decarbonating (carbon dioxide) plant, containing alkali metal carbonate, bicarbonate, arsenite and arsenate, by ammoniating the solution sufficiently to eliminate the bicarbonate therefrom. The ammonia may subsequently be removed from the residual solution by distillation to prepare the solution for return to the carbon dioxide plant.

3,395,979
PROCESS FOR THE CONVERSION OF CALCIUM ACID PHOSPHATE DIHYDRATE TO CALCIUM ACID PHOSPHATE
Halbert Schafer, Eastlake, Ohio, assignor to General Electric Company, a corporation of New York
Filed Dec. 23, 1966, Ser. No. 604,473
6 Claims. (Cl. 23—108)

A process for the conversion or recrystallization of $CaHPO_4 \cdot 2H_2O$ into $CaHPO_4$ wherein the $CaHPO_4 \cdot 2H_2O$ is heated into the desired temperature range and allowed to form a gel column supported on a screen in a reaction vessel. As the conversion occurs, crystals of $CaHPO_4$ fall through the screen and are separated from the gel before growing to undesirable sizes or size distributions. Continuous recrystallization is made practical by this process. The product is an improved intermediate for phosphor production. Steam injection heating of the slurry in constricted flow is preferred.

3,395,980
PRODUCTION OF POTASSIUM SULFATE
William B. Dancy, Lakeland, Fla., assignor to International Minerals & Chemical Corporation, a corporation of New York
Filed Mar. 21, 1963, Ser. No. 267,030
12 Claims. (Cl. 23—121)

1. In a process for the production of potassium sulfate by the reaction of potassium chloride with langbeinite, in aqueous medium wherein some sodium chloride is present, with the crystallization and recovery of potassium sulfate from the aqueous medium, the improvement comprising evaporating sufficient water from at least a portion of the aqueous medium at elevated temperature to produce a concentrated aqueous slurry of potassium chloride and langbeinite, the aqueous phase of said slurry being supersaturated with langbeinite, the amount of water removed by evaporation being sufficient to substantially saturate the aqueous phase with sodium chloride at 30° C., maintaining said slurry at a temperature in the range of 80° to 100° C. without substantial further evaporation for a period of 1 to 5 hours to crystallize additional langbein-

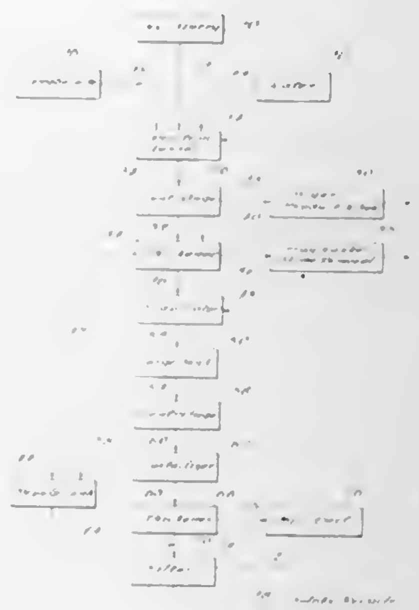

ite, separating the slurry at 80° to 100° C. into a solids fraction and an aqueous fraction, cooling the aqueous fraction to a temperature in the range of 25° to 40° C. to crystallize potassium chloride without substantial crystallization of sodium chloride, and separating the crystallized potassium chloride from the aqueous portion of the aqueous fraction, repulping the solid fraction with brine containing chlorides and sulfates of potassium and magnesium at a temperature in the range of 50° to 65° C. to produce leonite and magnesium chloride, and recycling the leonite to the initial reaction.

3,395,981
METHOD OF MANUFACTURING ALUMINUM NITRIDE
Werner Kischio, Aachen, Germany, assignor to North American Philips Company Inc., New York, N.Y., a corporation of Delaware
No Drawing. Filed Feb. 14, 1966, Ser. No. 527,059
Claims priority, application Germany, Mar. 10, 1965, N 26,357
3 Claims. (Cl. 23—192)

Aluminum nitride of high purity produced by heating aluminum zinc alloy bars in an ammonium gas atmosphere.

3,395,982
SYNTHETIC PRODUCTION OF AMMONIA
William J. Didycz, Whitehall Borough, Pa., assignor to United States Steel Corporation, a corporation of Delaware
Filed Oct. 14, 1966, Ser. No. 586,738
5 Claims. (Cl. 23—199)

In the synthetic production of ammonia in a high-pressure catalytic converter comprising a series of catalyst beds disposed one above the other in a converter shell, the process comprises dividing the gases to be reacted into a plurality of separate streams, passing one of the streams in indirect heat-exchange with the reaction products outflowing from each catalyst bed, passing one of the streams peripherally of the catalyst beds, then

combining all of the streams and passing the combined stream serially through the catalyst beds and heat ex-

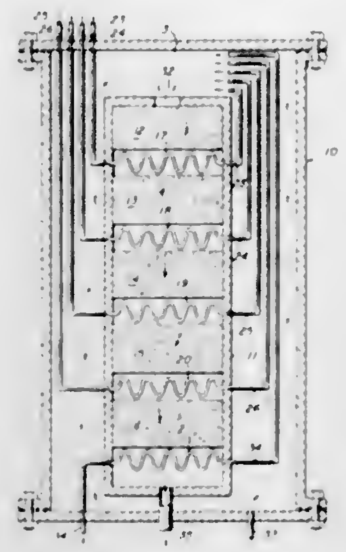

changers respectively, thereby effecting reaction of the gases in the beds.

3,395,983
PROCESS FOR THE PREPARATION OF IRON OXIDE
Leonard M. Bennetch, Bethlehem, Pa., assignor to Chas. Pfizer & Co., Inc., New York, N.Y., a corporation of Delaware
No Drawing. Filed Sept. 17, 1965, Ser. No. 488,250
5 Claims. (Cl. 23—200)

Increased yields of ferric oxide are obtained by heating a ferrous salt and metallic iron in the presence of a hydrated ferric oxide seed slurry while maintaining a pH of 3–4½ by interadjusting the respective rates of addition of ammonia gas and an oxygen containing gas.

3,395,984
BORON PHOSPHATE HAVING HIGH SURFACE AREA AND METHOD FOR PRODUCTION THEREFOR
John Frederick Collins, Chessington, England, assignor to United States Borax & Chemical Corporation, Los Angeles, Calif.
No Drawing. Filed Sept. 9, 1964, Ser. No. 395,324
Claims priority, application Great Britain, Sept. 13, 1963, 36,235/63
2 Claims. (Cl. 23—203)

Unsupported boron phosphate having a high surface area and high catalytic activity is produced by heating about equimolar amounts of phosphoric acid and a trialkyl borate or ammonium biborate to a temperature of at least about 50° C. to form a gel and then drying the gel. The product is a porous material having a high surface area of at least 100 square meters per gram.

3,395,985
METHOD FOR PRODUCING HIGHLY PURE, PARTICULARLY SILICON-FREE $A^{III}B^{V}$ COMPOUNDS
Hans Merkel, Erlangen, Germany, assignor to Siemens Aktiengesellschaft, Berlin, Germany
Filed June 27, 1966, Ser. No. 560,448
Claims priority, application Germany, June 25, 1965, S 97,810
5 Claims. (Cl. 23—204)

Described is a method of producing highly pure, silicon-free, crystalline $A^{III}B^{V}$ compounds, through chemical reaction from the elements. The method comprises forming the reaction vessel from the more volatile element. The less volatile element is placed in the reaction vessel of the more volatile element. The reaction temperature is increased from the start of the reaction process at a value above the melting point of the less

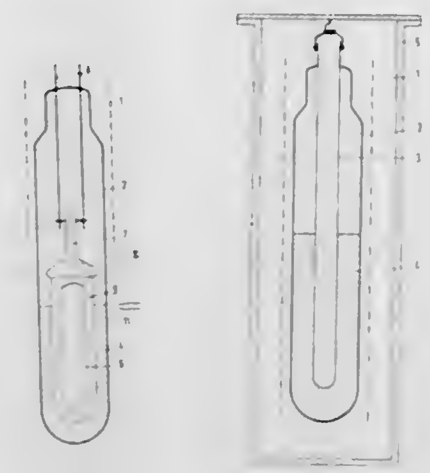

volatile component, to a value up to the melting temperature of the synthesized $A^{III}B^{V}$ compound and subsequently pulling monocrystals of the synthesized $A^{III}B^{V}$ compound from the melt.

3,395,986
PROCESS FOR THE PRODUCTION OF BORON PHOSPHIDE
Bernard A. Gruber, Dayton, Ohio, assignor to Monsanto Company, a corporation of Delaware
No Drawing. Filed Mar. 3, 1958, Ser. No. 718,465
13 Claims. (Cl. 23—204)

1. Process for the production of boron phosphide which comprises heating a mixture of a phosphide selected from the group consisting of aluminum, magnesium, copper, titanium, chromium, manganese, vanadium, zirconium, molybdenum, tantalum and thorium phosphides with a boride selected from the group consisting of iron, magnesium, aluminum, copper, titanium, zirconium and vanadium borides in a molten metal matrix comprising at least one of the group consisting of metallic aluminum, magnesium, copper, titanium, chromium, manganese, vanadium, zirconium, molybdenum, tantalum, thorium, iron, nickel, lead, tin, antimony, bismuth and zinc at a temperature of from 1,800° F. to 3,300° F.

3,395,987
FIELD METHOD FOR THE DETERMINATION OF SILVER IN SOILS AND ROCKS
Harry M. Nakagawa, Denver, and Hubert W. Lakin, Lakewood, Colo., assignors to the United States of America as represented by the Secretary of the Interior
No Drawing. Filed Feb. 17, 1966, Ser. No. 529,606
5 Claims. (Cl. 23—230)

1. A method for determining the presence and amount of silver in geologic materials comprising:
(a) digesting a sample of said material in concentrated nitric acid to form an acid solution,
(b) intimately contacting said acid solution with a substantially immiscible organic solvent containing tri-isooctyl thiophosphate (TOTP), said TOTP being capable of extracting any silver present in the acid solution whereby said contacting step results in the formation of an aqueous raffinate phase and an immiscible organic extract phase containing the silver initially present in the acid solution,
(c) separating the phases from one another,
(d) intimately contacting the organic extract phase with dilute HCl having a normality no higher than about 0.3 N, said dilute HCl being capable of extracting any silver present in the organic extract

phase, said dilute HCl being substantially immiscible in said organic solvent present in the organic extract phase whereby said HCl contacting step results in the formation of an organic raffinate phase and a substantially immiscible aqueous extract phase containing the silver previously present in said organic extract phase,

(e) separating the organic raffinate phase and aqueous extract phase,

(f) adding a persulfate ion-containing compound and a manganous ion-containing compound to said aqueous extract phase, heating the solution for a predetermined period of time to cause oxidation of said manganous ion to permanganate and thereby form a silver indicator sample solution,

(g) preparing a series of standard permanganate solutions with varying known amounts of silver therein,

(h) comparing colorwise, said silver indicator sample solution with said standard permanganate solutions to describe the amount of silver present in said sample solution.

3,395,988
APPARATUS FOR THE CONTINUOUS PRECIPITATION OF PLUTONIUM IN THE FORM OF OXALATE
Pierre Auchapt and Georges Bouzou, Bagnols-sur-Ceze, France, assignors to Commissariat à l'Energie Atomique, Paris, France
Filed Sept. 14, 1964, Ser. No. 396,001
Claims priority, application France, Sept. 19, 1963, 947,959
3 Claims. (Cl. 23—260)
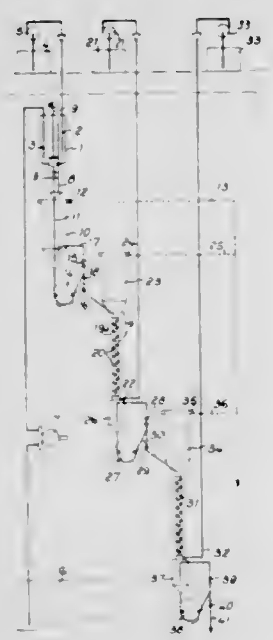
3. Apparatus for the continuous precipitation of plutonium oxalate, comprising successively: a mixer having a conduit for admission of oxalic acid, a conduit for admission of plutonium nitrate, a stirrer and an overflow outlet for the delivery of the precipitate of oxalate which is formed; a settler having means for receiving the precipitate of oxalate from said overflow outlet; a first acid washing column; and a second column for washing with water, the settler and the two washing columns each having a recirculating conduit containing a sludge pump and a bypass conduit connected to said recirculating conduit, said recirculating conduit and said by-pass conduit having respective valves and means for operating said valves so that one is closed while the other is open, the by-pass conduit in the recirculating conduit for the settler being connected for delivery of oxalate precipitate into the first acid wash column and the by-pass conduit connected to the recirculating conduit of the first acid wash column being connected to deliver acid washed precipitate to the water wash column, whereby recirculation of oxalate precipitate to said settler and to said wash columns and periodic transfer of recirculating precipitate from one of the successive devices to the next can be accomplished by manipulation of said valves.

3,395,989
APPARATUS FOR THE PRODUCTION OF FORMIC ACID
Eirik Lindkvist, Perstorp, Sweden, assignor to Perstorp Aktiebolag, Stockholm, Sweden, a corporation of Sweden
Original application July 10, 1964, Ser. No. 381,730. Divided and this application Aug. 4, 1966, Ser. No. 593,617
Claims priority, application Sweden, Apr. 3, 1964, 4,097/64
2 Claims. (Cl. 23—263)

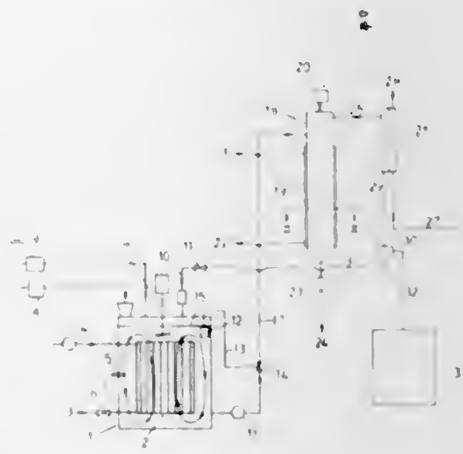

Formic acid is prepared continuously in an assembly comprising a reactor, means for feeding reactants to the reactor at a controlled rate, a thin layer evaporator, means for withdrawing reaction products from the reactor and feeding the same to the evaporator, a condenser receiving vapor from the evaporator, means for withdrawing solids from the evaporator, and a receiver for condensate from the condenser. The evaporator is a vertically disposed heat-jacketed cylinder provided with a multi-bladed rotor, some of the blades being fixed and the remainder being pivotally mounted and disposed intermediately of the fixed blades, there being a clearance of from 1–5 mm. between the fixed blades and the wall of the evaporator while the pivoted blades engage the wall of the evaporator in scraping relationship upon rotation of the rotor.

3,395,990
APPARATUS FOR EFFECTING CONTINUOUS EXOTHERMIC REACTION BETWEEN AT LEAST TWO FLUID REAGENTS
Mario Ballestra, Viale Bianca Maria 26, Milan, Italy
Filed May 24, 1965, Ser. No. 458,217
Claims priority, application Italy, May 23, 1964, 12,032/64
7 Claims. (Cl. 23—284)

An apparatus is provided for carrying out a continuous exothermic reaction between at least one gaseous reactant and at least one liquid reactant, where at least one of the reaction products is gaseous. The reaction is carried out by distributing the liquid reagent into the reactor in such a way that it forms a film which slides on an inner surface of a vertical wall of the reactor. The gaseous reagent enters the reactor through a cylinder mounted vertically and centrally inside the reactor. The gaseous stream exiting from the cylinder is directed into a helical path and into sliding contact with the surface of the film of liquid reagent. The resultant path of the gaseous stream is inclined with respect to the natural direction of fall of the

liquid reagent; thus the gaseous current deflects the sliding of the liquid film from the direction of its normal fall and the contact between the liquid and gaseous reagent is thereby increased. The resultant liquid and gaseous

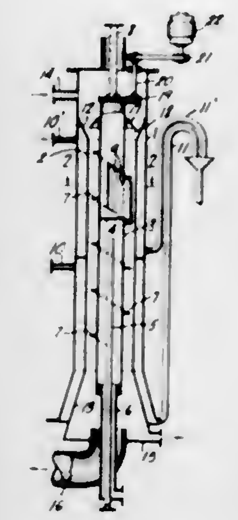

streams exit through separate outlets provided in the reactor. The lower portion of the reactor is conically widened to facilitate the separation of the gaseous stream from the liquid stream.

3,395,991
RECOVERY OF PROTACTINIUM FROM MOLTEN FLUORIDE SALTS
Warren R. Grimes and James H. Shaffer, Oak Ridge, Tenn., assignors to the United States of America as represented by the United States Atomic Energy Commission
No Drawing. Filed June 6, 1967, Ser. No. 644,466
8 Claims. (Cl. 23—325)

Protactinium values are removed from molten metallic salts by reducing the protactinium values to metal with thorium metal and thereafter contacting the salt with high surface iron to thereby sorb the protactinium metal thereon.

3,395,992
CONCENTRATION OF TRANSPLUTONIUM ACTINIDES FROM DIRT SAMPLES
Kurt Wolfsberg and William R. Daniels, Los Alamos, N. Mex., assignors to the United States of America as represented by the United States Atomic Energy Commission
Filed Jan. 13, 1967, Ser. No. 609,732
1 Claim. (Cl. 23—338)

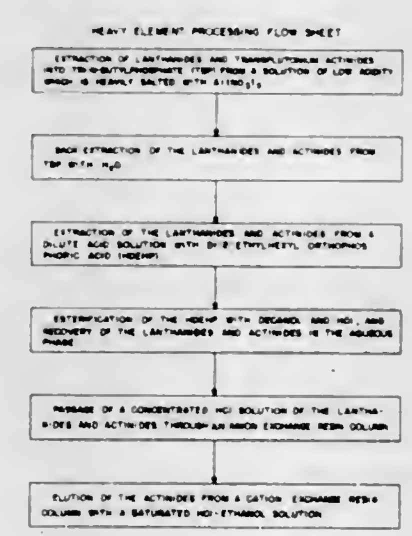

A method to concentrate the tripositive actinide elements produced in underground nuclear detonations in which the lanthanides and transplutonium actinides are extracted into tri-n-butylphosphate from large volumes of solutions of low acidity which are heavily salted with aluminum nitrate is described. The actinides and lanthanides are further extracted into di-2-ethylhexyl orthophosphoric acid and are recovered in an aqueous phase after esterification with decanol. A concentrated hydrochloric acid solution of the actinides and lanthanides is passed through an anion exchange resin column. The actinides are then separated from the lanthanides by elution from a cation exchange resin column with a solution of ethanol-hydrochloric acid. A separation between the transcurium actinides and americium and curium is made on this column.

ERRATUM

For Class 29—183 see:
Patent No. 3,395,438

3,395,993
TITANIUM ACTIVATED NICKEL SEAL AND METHOD OF FORMING IT
Robert H. Bristow, Burnt Hills, N.Y., assignor to General Electric Company, a corporation of New York
Continuation of application Ser. No. 294,340, July 11, 1963. This application June 22, 1966, Ser. No. 559,695
3 Claims. (Cl. 29—195)

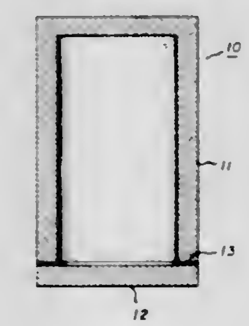

1. A seal assembly comprising in combination, a ceramic member, and a second member taken from the class consisting of ceramics and metals, said members being positioned in adjacent operative relationship, and a thin film of alloy therebetween securely joining said members, said alloy consisting of nickel and titanium in the range of 75 to 90 weight percent nickel, balance titanium, said alloy being substantially free of the phases alpha titanium and Ti_2Ni, and containing a phase ranging from predominantly $TiNi_3$ to predominantly a nickel solid solution, said alloy being formed while between said members in the temperature range of about 1250° C. to 1350° C.

3,395,994
METHOD OF MAKING FINE ADJUSTMENT IN NUMERICAL APERTURE OF FIBER OPTICAL DEVICES
David W. Cuff, Webster, Mass., assignor, by mesne assignments, to American Optical Company, Southbridge, Mass., a corporation of Delaware
Filed Oct. 12, 1964, Ser. No. 403,000
7 Claims. (Cl. 65—17)
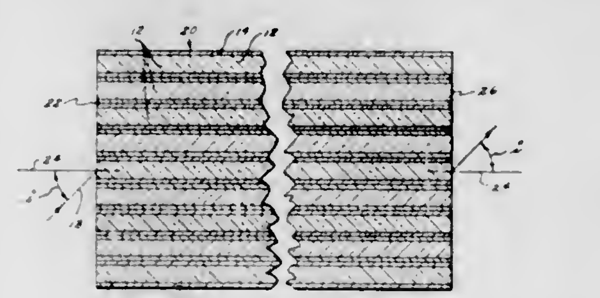
A method of making adjustment in numerical aperture of an assembled fiber optical light-conducting device hav-

ing one or more core parts of glass of one index of refraction each clad with a glass of a different index of refraction. The technique consists essentially of selectively altering the refractive index of one of the constituent glasses relative to that of the other by compacting or densifying it under appropriate time-temperature conditions. Compaction is performed in an elevated controlled temperature environment where the rate of index change is most pronounced for the one glass.

3,395,995
METHOD AND APPARATUS FOR GRANULATING SLAG
Charles J. Burch, Lower Makefield Township, Bucks County, Pa., assignor to United States Steel Corporation, a corporation of Delaware
Filed Feb. 5, 1965, Ser. No. 430,660
8 Claims. (Cl. 65—19)

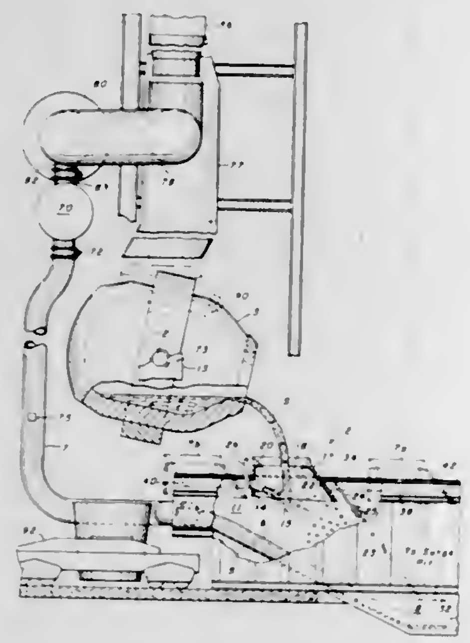

A method and apparatus for removing slag from a steel refining vessel and transporting it to an appropriate disposal area. As the molten slag is poured from the vessel, a liquid spray is injected into the falling slag stream to break the slag into particles. Then the slag particles fall into a fast moving stream of liquid, which break the slag particles into smaller granules and carry the slag away. The liquid stream originates from an elevated storage tank, where the liquid is alternately accumulated during the refining of the iron, and released during the pouring of the slag.

3,395,996
METHOD AND APPARATUS FOR INHIBITING THE FLOW OF IMPURITIES OF A MOLTEN BATH TO THE GLASS SHEET THEREON
David Gordon Loukes, Prescot, England, assignor to Pilkington Brothers Limited, Liverpool, England, a corporation of Great Britain
Filed Mar. 11, 1965, Ser. No. 438,878
Claims priority, application Great Britain, Mar. 13, 1964, 10,801/64
11 Claims. (Cl. 65—27)

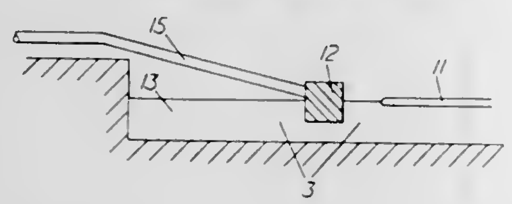

In the float process for the manufacture of flat glass on a molten metal bath physical barriers are located in the bath to inhibit transfer of impurities from the exposed molten metal surface to the glass/metal interface.

3,395,997
METHOD OF TREATING GLASS TO REDUCE HELIUM PERMEATION
Paul J. Bryant, Prairie Village, Kans., and Charles M. Gosselin, Kansas City, Mo., assignors to Midwest Research Institute, Kansas City, Mo., a corporation of Missouri
No Drawing. Filed June 29, 1965, Ser. No. 468,125
11 Claims. (Cl. 65—30)

Glass vessels or other glass articles are rendered highly resistant to helium permeation by treating one of the surfaces thereof with cesium.

3,395,998
METHOD FOR PRODUCTION OF GLASS ARTICLE HAVING INCREASED MECHANICAL STRENGTH
Joseph S. Olcott, Painted Post, N.Y., assignor to Corning Glass Works, Corning, N.Y., a corporation of New York
Filed Dec. 18, 1964, Ser. No. 419,307
5 Claims. (Cl. 65—30)

In this invention, an alkali silicate glass article wherein the principal alkali ion is large is contacted with alkali ions which are smaller than said principal alkali ion at a temperature above the strain point of the glass to cause the replacement of at least a part of the principal alkali ions in a surface layer on the glass with said smaller ions. The article is then cooled below the transformation range thereof and exposed to a temperature between 200° C. and the transformation range to cause an exchange to occur between the smaller ions in the surface layer and said larger alkali ions from the interior part of the glass to thereby produce a surface compression layer in the article.

3,395,999
METHOD OF TREATING GLASS IN A MOLTEN SALT
Stanley S. Lewek, Corning, N.Y., assignor to Corning Glass Works, Corning, N.Y., a corporation of New York
No Drawing. Filed July 6, 1965, Ser. No. 469,919
2 Claims. (Cl. 65—30)

This invention relates to the strengthening of alkali metal silicate glasses through an ion exchange reaction utilizing a bath of molten alkali metal salt. This invention provides a means for minimizing chemical attack of the glass surface by the molten salts through the addition of diatomaceous earth to the bath.

3,396,000
METHOD OF AND APPARATUS FOR BENDING AND TEMPERING GLASS SHEETS BY DIFFERENTIAL HEATING
Frank J. Carson, Toledo, Charles W. Ferguson, Perrysburg, George F. Ritter, Jr., Toledo, and Frank J. Hymore, Oregon, Ohio, assignors to Libbey-Owens-Ford Glass Company, Toledo, Ohio, a corporation of Ohio
Continuation-in-part of application Ser. No. 286,331, June 7, 1963. This application Sept. 26, 1966, Ser. No. 590,171
10 Claims. (Cl. 65—104)

A method of producing bent tempered glass sheets by first heating the sheet to substantially the softening point of the glass and then rapidly chilling opposite surfaces of the heated sheet at different rates to both temper the

glass and bow the sheet to a desired curvature. The heating step may involve differential heating of the top and bottom surfaces and restricted areas of one surface of

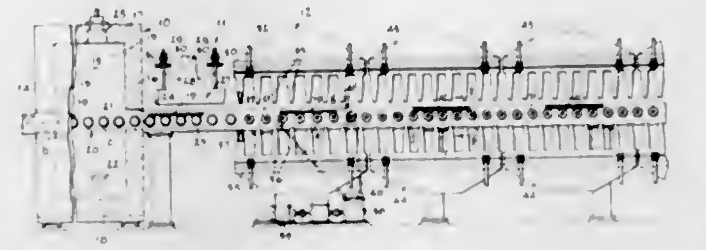

the sheet may be initially cooled to bend these areas before tempering and bowing the sheet to finished form. An apparatus for carrying out the method is also disclosed.

3,396,001
METHODS OF AND APPARATUS FOR TOUGHENING SHEETS OF GLASS WITH A RESERVE ZONE
Henry Wellstood Baker, Birmingham, England, assignor to Pilkington Brothers Limited, Liverpool, England, a corporation of Great Britain
Filed Feb. 11, 1965, Ser. No. 431,797
Claims priority, application Great Britain, Feb. 12, 1964, 5,941/64
4 Claims. (Cl. 65—115)

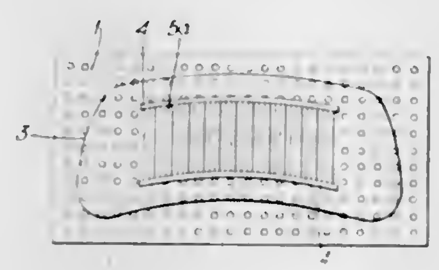

Methods and apparatus for selectively toughening glass to leave selected vision areas when the glass is shattered wherein there are interposed in the path of a gaseous chilling medium directed uniformly toward the faces of a uniformly heated glass sheet for windshields, outer elements extending generally in the direction of the longer edges of the sheet, outer elements connecting the same, and spaced interior strips also connecting the same and alternately intercepting the chilling medium to provide a vision zone.

3,396,002
PASTE MOLD WITH EVAPORATION GROOVES
Emil Jan Johan Benard, Leerdam, Netherlands, assignor to N.V. Vereenigde Glasfabrieken (United Glassworks), Schiedam, Netherlands
Filed Sept. 15, 1964, Ser. No. 396,695
Claims priority, application Netherlands, Sept. 20, 1963, 298,205
2 Claims. (Cl. 65—267)

Glass articles are blown in a paste lined mold which is treated with water which provides a steam cushion during the molding operation. The water and mold are maintained at temperatures which assure that the evaporation of the water between the spraying and molding operations will not be sufficient to prevent an appreciable

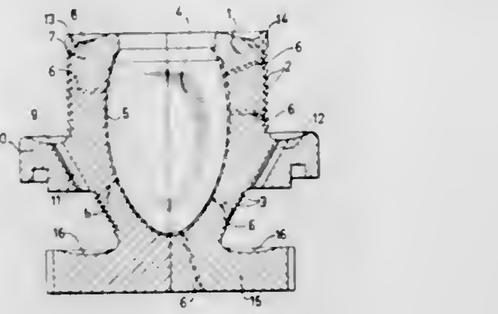

cushion of steam, the exterior of the mold being cooled by evaporating water.

3,396,003
METHOD OF AMMONIATING PHOSPHATE ROCK
Kurt C. Scheel, Lubeck-Danischburg, and Hans Ebsen, Krefeld, Germany, assignors to Guano-Werke Aktiengesellschaft (vorm. Ohlendorff'sche und Merck'sche Werke), Hamburg, Germany
Filed Nov. 13, 1964, Ser. No. 410,960
Claims priority, application Germany, Nov. 15, 1963, G 39,179
5 Claims. (Cl. 71—34)

Phosphate rock is reacted with nitric or phosphoric acid and the acidulated mixture is ammoniated in a single stage in the presence of a large amount of recycled already ammoniated solution thereby maintaining the pH between 5.5 and 6.8 and preventing thickening and evaporating excess water during neutralization without additional operations.

3,396,004
CONTINUOUS METHOD OF PRODUCING AMMONIUM PHOSPHATE FERTILIZER
Casimer C. Legal, Jr., Elkridge, and Alvin Richmond, Baltimore, Md., assignors to W. R. Grace & Co., New York, N.Y., a corporation of Connecticut
Filed Dec. 29, 1966, Ser. No. 605,929
5 Claims. (Cl. 71—39)

A continuous method and apparatus for producing fertilizers by reacting phosphate rock with an acid and

neutralizing the acidulate. Phosphate rock and an acid are continuously charged to a digestion reaction zone to form an acidulated mass. The acidulate is continuously removed from the digestion zone through a quiet section

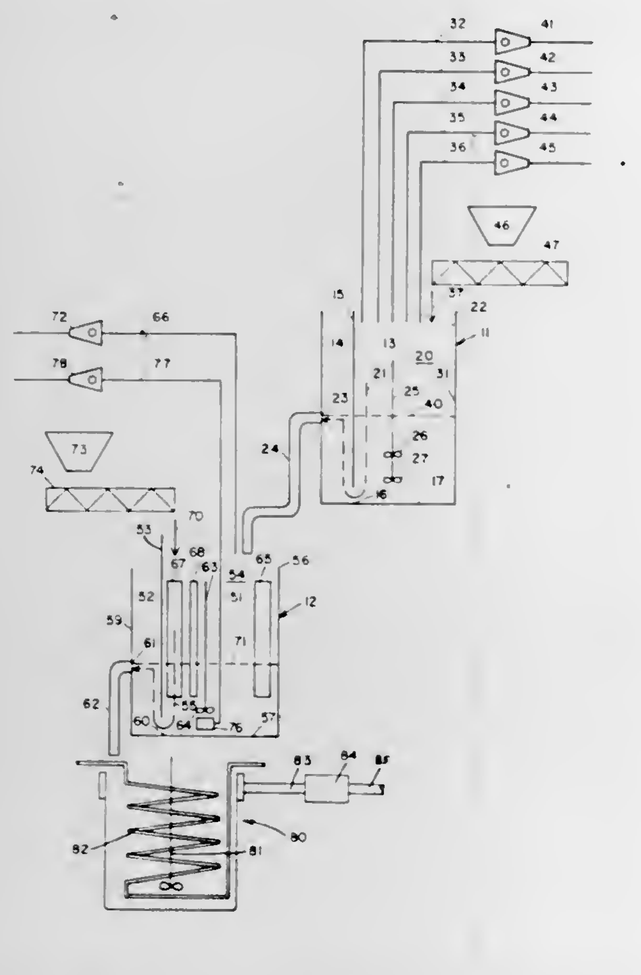

and then transferred to a neutralization zone. In the neutralization zone, the mass is neutralized with ammonia and continuously removed from the neutralization zone through a quiet section of said neutralization zone.

3,396,005

METHODS OF AFFECTING PLANT GROWTH

Ivan C. Popoff, Ambler, Pa., assignor to Pennsalt Chemicals Corporation, Philadelphia, Pa., a corporation of Pennsylvania

No Drawing. Filed Jan. 11, 1965, Ser. No. 424,821

6 Claims. (Cl. 71—70)

A method for obtaining plant response effects with compounds having the general structure:

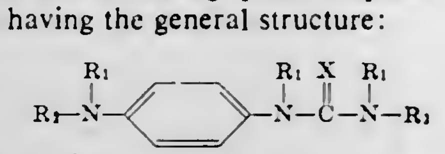

where R_1 is a member of the group consisting of alkyl, alkenyl, cycloalkenyl, cycloalkyl, and aryl radicals, R_2 is a member of the group of hydrogen, R_1 and

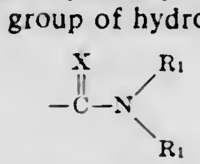

radicals, R_3 being selected from the group of R_1 and

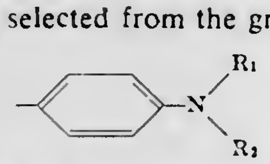

radicals, and X is an atom selected from the group of oxygen and sulfur. R_1 will generally contain from one to twelve carbon atoms and will preferably be alkyl.

3,396,006

METHOD AND COMPOSITION FOR PLANT GROWTH ALTERATION

Stanley J. Strycker, Midland, Mich., assignor to The Dow Chemical Company, Midland, Mich., a corporation of Delaware

No Drawing. Application Sept. 21, 1964, Ser. No. 398,027, now Patent No. 3,280,107, dated Oct. 18, 1966, which is a continuation-in-part of application Ser. No. 307,795, Sept. 10, 1963. Divided and this application Apr. 8, 1966, Ser. No. 558,180

4 Claims. (Cl. 71—92)

Methods employing and compositions containing certain triazepine compounds which are of outstanding value for the modification and alteration of the growth of plants. These triazepine compounds are hexahydro-1,5-dinitro-3-substituted-1H-1,3,5-triazepines, hexahydro 6-methyl-1,5-dinitro-3-substituted-1H-1,3,5-triazepines and hexahydro-6,7 - dimethyl - 1,5-dinitro-3-substituted-1H-1,3,5-triazepines wherein the substituents are selected from phenyl, substituted phenyl, naphthyl, pyridyl, substituted alkyl or cyclic-substituted methyl.

3,396,007

COMPOSITION AND METHOD FOR STIMULATING PLANT GROWTH

Stanley J. Strycker, Midland, Mich., assignor to The Dow Chemical Company, Midland, Mich., a corporation of Delaware

No Drawing. Original application Sept. 10, 1963, Ser. No. 307,788. Divided and this application Apr. 21, 1966, Ser. No. 560,398

3 Claims. (Cl. 71—77)

The present invention is directed to methods and compositions for the alteration of the growth of plants. The active agent of these methods and compositions is a compound of the formula

$$R'{-}SO_2{-}\overset{\overset{NO_2}{|}}{N}{-}R{-}\overset{\overset{R''}{|}}{N}{-}SO_2{-}R'$$

wherein R represents a divalent hydrocarbonylene radical selected from the group consisting of alkylene being of from 2 to 10, inclusive, carbon atoms, 2-butenylene, cyclohexylene, and cyclohexylenedimethylene; R′ represents a member selected from the group consisting of lower-alkyl being of from 1 to 4, inclusive, carbon atoms, phenyl, and substituted phenyl; and R″ represents a member selected from the group consisting of hydrogen and nitro.

3,396,008

METHOD OF INCREASING BLOSSOM GERMINATION

Verle W. Woods and Wellman D. Turney, Yakima, Wash., assignors to Woods Industries, Inc., Yakima, Wash., a corporation of Washington

No Drawing. Filed Mar. 16, 1964, Ser. No. 352,361

3 Claims. (Cl. 71—97)

A method of increasing blossom germination by adding to live pollen an amount of ground ferrous gluconate, utilizing artificial pollenization. In the production of the mixture, a carrier substance is used to provide workable volumes of the material. The ferrous gluconate is evidently utilized as food for the pollen after being deposited on the blossom and causes the pollen tubes to grow at a rate faster than normal.

3,396,009

CHEMICAL CONTROL OF WEEDS IN SUGAR BEETS

Ralph P. Neighbors, Olathe, Kans., assignor to Gulf Research & Development Company, Pittsburgh, Pa., a corporation of Delaware

No Drawing. Continuation-in-part of application Ser. No. 374,813, June 12, 1964. This application Apr. 20, 1966, Ser. No. 543,789

6 Claims. (Cl. 71—115)

Weeds in sugar beet fields, particularly species of Kochia are controlled by applying to the locus of the weeds benzamidooxyacetic acid or a salt thereof at a rate of about ½ to 6 pounds per acre.

3,396,010

SLAG CONDITIONER

Herbert E. Gould, Seattle, Wash., assignor to Northwest Olivine Company, Seattle, Wash., a corporation of Washington

No Drawing. Filed Sept. 16, 1965, Ser. No. 487,899

17 Claims. (Cl. 75—30)

Olivine is added in the basic production of iron and steel to increase slag fluidity. The addition of olivine may be made along with the charge and both in oxidizing and refining slags.

3,396,011

PROCESS AND APPARATUS FOR THE CONTINUOUS REFINING OF FERROUS METAL AND PARTICULARLY PIG IRON

Bernard Trentini, Metz, France, assignor to Institut de Recherches de la Siderurgie Francaise, Saint Germain-en-Laye, Yvelines, France

Filed Oct. 6, 1965, Ser. No. 493,330

Claims priority, application France, Oct. 12, 1964, 991,115

10 Claims. (Cl. 75—60)

Ferrous, carbon-containing metal, such as pig iron, is refined by introducing a stream of the ferrous metal which is to be refined into a bath of at least partially refined ferrous metal which has a lower carbon content than the ferrous metal which is to be refined, intimately mixing the introduced stream of the ferrous metal with the partially refined bath so as to form a molten ferrous mixture having an average carbon content lower than that of the ferrous metal which is to be refined, blowing a stream of oxidizing gas into the thus-formed mixture without directly contacting as yet unmixed portions of the introduced

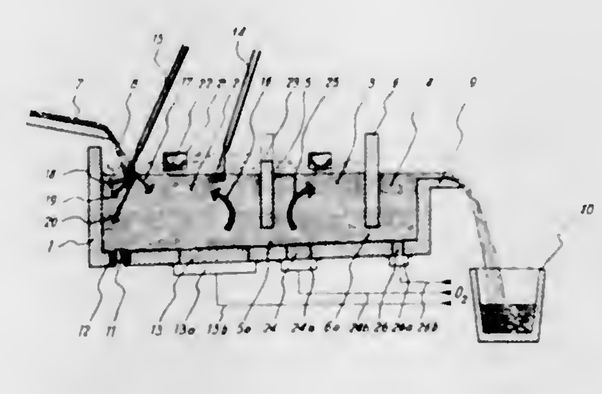

stream of ferrous metal so that the oxidizing gas will not come in direct contact with ferrous metal of the initial relatively high carbon content and will cause oxidizing refining of the ferrous mixture which has a carbon content lower than that of the initially introduced pig iron or the like.

3,396,012

RECOVERY OF SILICON FROM ALLOYS THEREOF AND FROM SILICON SULFIDES

James O. Huml, Midland, Mich., assignor to The Dow Chemical Company, Midland, Mich., a corporation of Delaware

No Drawing. Filed Oct. 4, 1965, Ser. No. 492,924

20 Claims. (Cl. 75—62)

1. A process for the preparation of silicon metal from silicon sulfide which comprises contacting a silicon sulfide with a sulfide-forming metal other than silicon in an inert atmosphere and at a temperature between the melting point of such other metal and the boiling point of the lowest boiling metal sulfide product other than silicon sulfide to produce a silicon phase and a metal sulfide phase.

13. A process for removing silicon from alloys thereof with sulfide-forming metals other than silicon which comprises contacting in an inert atmosphere such sulfide-forming metal with sufficient silicon sulfide to react with the sulfide-forming metal at a temperature between the melting point of such alloy and the boiling point of the lowest boiling metal sulfide product therefrom other than silicon sulfide to produce a silicon metal phase and a metal sulfide phase and separating the silicon phase therefrom.

17. A process for the preparation of alloys of silicon which comprises contacting in an inert atmosphere at least one sulfide-forming metal other than silicon with a quantity of a silicon sulfide insufficient to react with the sulfide forming metal at a temperature above the melting point of the sulfide-forming metal and below the boiling point of the lowest boiling metal sulfide product other than silicon sulfide to produce a silicon-metal alloy phase and a metal sulfide phase, and separating the alloy phase from the metal sulfide phase.

3,396,013

BERYLLIUM-CONTAINING MARAGING STEEL

John R. Mihalisin, North Caldwell, N.J., assignor to The International Nickel Company, Inc., New York, N.Y., a corporation of Delaware

Filed Mar. 21, 1966, Ser. No. 535,849

7 Claims. (Cl. 75—123)

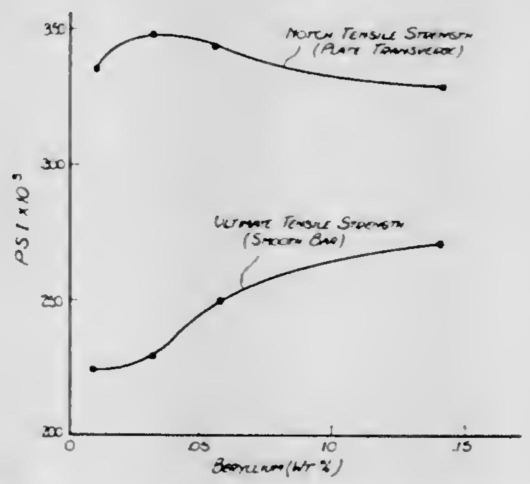

A ferrous-base alloy containing at least nickel, cobalt, molybdenum and beryllium, the alloy being characterized by high strength and toughness.

3,396,014

PROCESS FOR THE MANUFACTURE OF STAINLESS STEEL

Naaman H. Keyser, Parma, Ohio, assignor to Interlake Steel Corporation, Chicago, Ill., a corporation of New York

No Drawing. Filed June 3, 1965, Ser. No. 461,189

21 Claims. (Cl. 75—130.5)

A process for producing stainless steel comprising providing a ferrous basis melt having a chromium content of

14%, subjecting the basis melt to an oxygene blow at a temperature range of approximately 2900° F. to 3000° F. to reduce the carbon content to produce a decarburized basis melt having a silicon content of at least 0.25%, adding low carbon content chromium source material to the basis melt, continuing the oxidizing blow, and maintaining the silicon level during the introduction of the low carbon content chromium source material and the continued oxidizing blow.

3,396,015
POWDER ROLLING OF NICKEL-IRON-COBALT ALLOYS
Jerry C. La Plante, Hempstead, N.Y., assignor to Alloys Unlimited, Inc., Melville, N.Y.
No Drawing. Filed Jan. 11, 1968, Ser. No. 697,037
9 Claims. (Cl. 75—214)

The alloy 29 Ni, 17 Co, balance iron is prepared as a fine powder in the fully annealed condition and is rolled without added binders into a green strip of about 80% density. After sintering at 2000° F. for at least two hours, it is reduced by rolling about 30 to 50%, after which it is resintered. By controlling coil and roll diameters, edge breaking, curling and cracking are prevented. A uniform foil as thin as 0.004 in. can be prepared in this way. The lengthy heat treatments are necessary to produce a good product.

3,396,016
DEVELOPMENT AND COATING OF NEW ZINC OXIDE PHOTOCONDUCTING RECORDING SYSTEMS
James R. Olson, Rochester, N.Y., assignor to Eastman Kodak Company, Rochester, N.Y., a corporation of New Jersey
No Drawing. Filed Aug. 4, 1965, Ser. No. 477,307
12 Claims. (Cl. 96—1.8)

9. An electrophotographic element comprising a support and coated thereon a photoconductive electrically insulating layer comprising a particulate photoconductor dispersed in a non-polymeric binder comprising at least 25% sucrose ester, the remainder of said binder consisting essentially of at least one non-polymeric material selected from the group consisting of sucrose esters, bisphenols, and rosin.

3,396,017
LIGHT-DEVELOPABLE DIRECT-PRINT SILVER HALIDE EMULSIONS CONTAINING URAZOLE COMPOUNDS AS HALOGEN ACCEPTORS
Robert E. Bacon and Bernard D. Illingsworth, Rochester, N.Y., assignors to Eastman Kodak Company, Rochester, N.Y., a corporation of New Jersey
No Drawing. Filed Oct. 23, 1964, Ser. No. 406,186
18 Claims. (Cl. 96—27)

Direct-print emulsions comprising urazole halogen acceptors of the following formula:

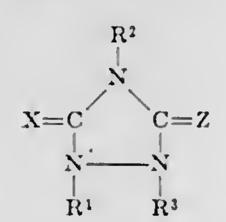

wherein:

(1) X and Z are each selected from the group consisting of an oxygen atom, a sulfur atom, a selenium atom and an imino radical; and
(2) R^1, R^2 and R^3 are each selected from the group consisting of a hydrogen atom, an alkyl radical, an aryl radical and an amino radical, except that at least one of R^1 and R^3 is a hydrogen atom.

3,396,018
DIFFUSION TRANSFER SYSTEM
Dorothy J. Beavers and Guernsey K. Edmonds, Rochester, N.Y., assignors to Eastman Kodak Company, Rochester, N.Y., a corporation of New Jersey
No Drawing. Filed May 17, 1963, Ser. No. 281,357
7 Claims. (Cl. 96—29)

1. A process for obtaining an image by the silver halide diffusion transfer method on an irregular surface comprising developing an exposed silver halide emulsion having thereon a substantially dried down overcoat of an alkali permeable polysaccharide with a silver halide developer solution having a viscosity of 1.0 to 300 centipoises containing silver precipitating nuclei and a silver halide solvent, and contacting the said polysaccharide while still wet with the said developer against a receiving support.

3,396,019
PLANOGRAPHIC PRINTING PLATES
Fritz Uhlig, Wiesbaden-Biebrich, Germany, assignor, by mesne assignments, to Azoplate Corporation, Murray Hill, N.J.
No Drawing. Continuation-in-part of application Ser. No. 124,804, July 18, 1961. This application Feb. 1, 1965, Ser. No. 429,625
Claims priority, application Germany, Aug. 5, 1960, K 41,387; Feb. 25, 1961, K 43,011
18 Claims. (Cl. 96—33)

This invention relates to a presensitized printing plate and process for developing same, the presensitized plate comprising a base of aluminum, a first layer thereon comprising an organic phosphonic acid or derivative thereof, and a second reproduction layer on the first layer, the latter comprising a mixture of at least one water-insoluble organophilic resin and a water-soluble diazonium condensate which is the product of a condensation of a diphenylamine-4-diazonium salt and formaldehyde in an acid condensation medium.

3,396,020
PLANOGRAPHIC PRINTING PLATE
Henning H. Borchers, Mountainside, N.J., assignor to Azoplate Corporation, Murray Hill, N.J., a corporation of New Jersey
No Drawing. Filed Nov. 16, 1965, Ser. No. 508,150
10 Claims. (Cl. 96—33)

1. A presensitized printing plate comprising an aluminum base, a first layer thereon comprising at least one compound selected from the group consisting of an organic phosphonic acid and the esters and salts thereof, and a second reproduction layer on the first layer, the latter comprising a water-soluble diazonium condensate, prepared by condensing a diphenylamine-4-diazonium salt with formaldehyde in an acid condensation medium, in admixture with a water-insoluble organophilic resinous material at least a major portion of which is an amine resin.

3,396,021
METHOD OF MAKING WIDE SCREEN MOTION PICTURES
Giulio Monteleoni and Giovanni Ventimiglia, Rome, Italy, assignors to Technicolor, Inc., a corporation of Delaware
Filed Dec. 26, 1963, Ser. No. 333,353
6 Claims. (Cl. 96—46)

An anamorphic wide screen motion picture print is made by exposing a negative in a camera without vertical or horizontal distortion but in a frame area of one-half normal height. Substantially all the negative picture area is filled by advancing the negative at half the normal feed rate. A positive print is then made by enlarging the vertical dimension of the picture in inverse proportion to the reduction of the negative feed rate without substantial change in width from that of the negative, so as to produce a print of normal frame dimensions with an anamorphosed wide scene filling the picture area of the print.

3,396,022
QUINONE STABILIZERS AND ANTIFOGGANTS FOR SILVER HALIDE EMULSIONS
Fritz Dersch, Binghamton, and Sally L. Paniccia, Endwell, N.Y., assignors to GAF Corporation, a corporation of Delaware
No Drawing. Filed June 25, 1965, Ser. No. 467,123
14 Claims. (Cl. 96—66.5)

6. An aqueous developer solution containing a silver halide photographic developing agent and an antifoggant and stabilizer comprising a compound of the following general formula:

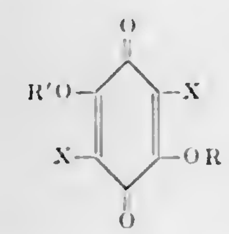

wherein X represents halogen and R and R′ are selected from the group consisting of hydrogen and a cation.

3,396,023
PIAZINE ANTIFOGGANTS FOR SILVER HALIDE EMULSIONS
William W. Rees and William H. Russell, Rochester, N.Y., assignors to Eastman Kodak Company, Rochester, N.Y., a corporation of New Jersey
No Drawing. Filed Aug. 24, 1965, Ser. No. 482,237
20 Claims. (Cl. 96—67)

A photographic element comprising piazine antifoggants for silver halide emulsions and processes for developing said element are disclosed.

3,396,024
PHOTOGRAPHIC SILVER HALIDE MULTILAYER MATERIAL FOR CORRECTING INADEQUATE CONTRAST
Ehrhard Hellmig, Leverkusen, and Franz Moll, Cologne-Stammheim, Germany, assignors to Agfa Aktiengesellschaft, Leverkusen, Germany, a corporation of Germany
Filed Apr. 6, 1964, Ser. No. 357,711
Claims priority, application Germany, Apr. 20, 1963, A 42,928
11 Claims. (Cl. 96—69)

Single film used for separate high quality continuous tone color separation records for all colors, gives more uniform contrast for the different colors and these records are more uniformly processed by bringing up the contrast of one or more colors, generally blue, inherently having less contrast. This is effected by combining the usual emulsion with a superposed emulsion of the same speed, sensitive only to the low contrast color or colors, and having a thickness that contributes the desired contrast build-up.

3,396,025
PHOTOSENSITIVE PRODUCTS FOR PREPARING GRAVURE RESISTS
Claude Guestaux, Colombes, Seine, and Daniel Gallois, Vincennes, Seine, France, assignors to Eastman Kodak Company, Rochester, N.Y., a corporation of New Jersey
Filed Nov. 13, 1964, Ser. No. 411,060
9 Claims. (Cl. 96—83)

A gravure resist film comprises a dimensionally, stable, temporary, subbed film support containing thereon (1) a water-impermeable layer, (2) a stripping layer comprising a hydrosol of an acrylic copolymer as for example a mixture of gelatin with a copolymer of ethyl acrylate and acrylonitrile, (3) an antihalation layer composed of a gelatin layer containing a dye or Carey Lea silver and (4) an unhardened gelatin-silver halide emulsion layer.

3,396,026
PHOTOGRAPHIC CAPSULAR PRODUCTS
Lloyd D. Taylor, Everett, Mass., assignor to Polaroid Corporation, Cambridge, Mass., a corporation of Delaware
No Drawing. Filed Mar. 25, 1963, Ser. No. 267,847
9 Claims. (Cl. 96—94)

This invention relates to microscopic capsules having walls which include a substantially continuous polymeric layer comprising a coacervate containing a low isoelectric point gelatin and a gelatin derivative, which derivative comprises the reaction product of gelatin and a derivatizing agent which reacts with at least a portion of the gelatin's amino groups, surrounding a nucleus comprising a water-immiscible medium and which are adapted to retain materials suitable for use in photographic black and white and color processes.

3,396,027
METHOD OF NOODLING GELATIN DISPERSIONS
John C. McFall and George S. Dundon, Rochester, N.Y., assignors to Eastman Kodak Company, Rochester, N.Y., a corporation of New Jersey
Filed May 13, 1964, Ser. No. 367,155
5 Claims. (Cl. 96—94)

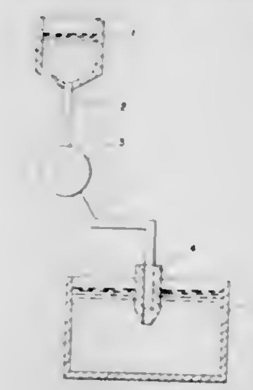

A process for forming noodles of photographic gelatin includes passing an aqueous gelatin dispersion through an extrusion head, the orifices of which are immersed in chilled water.

3,396,028
SILVER HALIDE EMULSIONS CONTAINING HYDROXY CARBOXYLIC ACID DERIVATIVES AS FOG INHIBITORS
Wilbert J. Humphlett, Rochester, N.Y., assignor to Eastman Kodak Company, Rochester, N.Y., a corporation of New Jersey
No Drawing. Filed Nov. 25, 1964, Ser. No. 413,962
19 Claims. (Cl. 96—109)

Photographic silver halide emulsions containing derivatives of hydroxy carboxylic acids as antifoggants and elements comprising such emulsions are disclosed.

3,396,029
HARDENING OF PHOTOGRAPHIC PROTEIN-CONTAINING LAYERS BY ACROLEIN POLYMERS CONTAINING CARBOXYLIC GROUPS
Wolfgang Himmelmann, Cologne-Stammheim, Alexander Riebel, Leverkusen, and Erwin Alfons Müller, Leverkusen-Schlebusch, Germany, assignors to Agfa Aktiengesellschaft, Leverkusen, Germany, a corporation of Germany
No Drawing. Filed June 8, 1964, Ser. No. 373,554
Claims priority, application Germany, June 14, 1963, A 43,323
7 Claims. (Cl. 96—111)

This invention relates to the hardening of photographic protein-containing layers particularly of gelatin layers to improve their resistance to water, by incorporating there-

in an acrolein polymer containing carboxylic groups. The polymer can be a copolymer of acrolein with an alpha, beta-unsaturated carboxylic acid such as acrylic acid, methacrylic acid or maleic acid, or it can be an acrolein homopolymer in which some of the aldehyde groups have been converted to carboxylic groups.

3,396,030
PHOTOGRAPHIC SILVER HALIDE EMULSIONS
Howard C. Haas, Arlington, Mass., assignor to Polaroid Corporation, Cambridge, Mass., a corporation of Delaware
No Drawing. Continuation-in-part of application Ser. No. 598,178, Dec. 1, 1966, which is a continuation-in-part of application Ser. No. 385,071, July 24, 1964. This application Oct. 19, 1967, Ser. No. 676,631
4 Claims. (Cl. 96—114)

1. A photographic silver halide emulsion comprising an additional copolymer comprising the reaction product resulting from the polymerization of a first monomer represented by the formula:

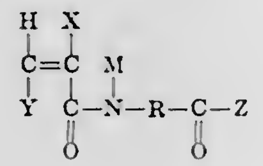

wherein:

Y is selected from the group consisting of hydrogen, methyl and phenyl groups;

X is selected from the group consisting of hydrogen, chloro, bromo, fluoro, cyano and lower alkyl groups;

R is a lower alkylene group;

M is selected from the group consisting of hydrogen and lower alkyl groups; and

Z is an amino group;

with an ethylenically unsaturated comonomer copolymerizable therewith.

3,396,031
METHOD OF FERMENTATION OF WORT
Robert H. Parsons, Scarborough, Ontario, Leslie John Kormendy, Richmond Hill, Ontario, and Donald S. Jackson, Willowdale, Ontario, Canada, assignors to Canadian Breweries Limited, Toronto, Ontario, Canada
Filed Sept. 23, 1964, Ser. No. 398,718
Claims priority, application Canada, Aug. 5, 1964, 908,678
1 Claim. (Cl. 99—48)

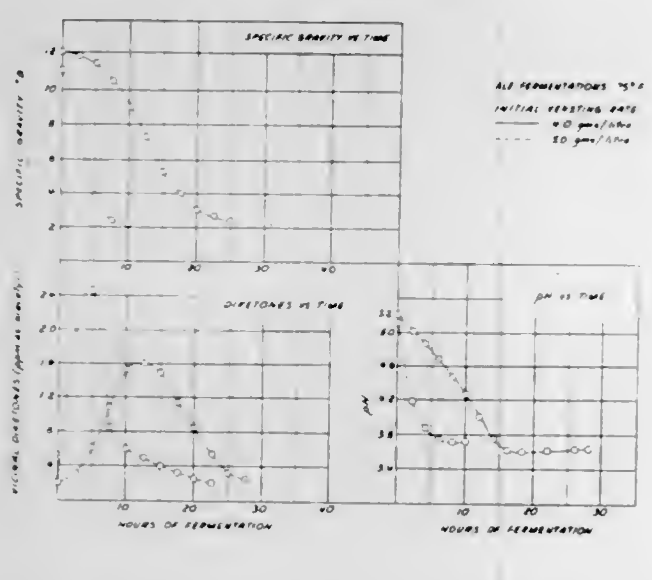

This invention concerns the reduction of vicinal diketones in alcoholic brewery beverages at the end of fermentation, and is especially important where higher yeasting rates are employed because in such cases vicinal diketones tend to be present in undesirable amounts at the end of the fermentation stage. Yeast tends to eliminate vicinal diketones from wort as the wort ferments. This invention is concerned with increasing the rate of yeast elimination of vicinal diketones from the fermenting wort, and the result is achieved by the addition of an acidulent to the wort before or during fermentation.

3,396,032
COMPRESSIBLE INFUSION DEVICE
John C. McCrae, Chester, Pa. (100 Delaware Ave., Ridley Park, Pa. 19078), and Harry A. Dooley, 2952 Miller St., Philadelphia, Pa. 19134
Filed Oct. 9, 1964, Ser. No. 402,816
7 Claims. (Cl. 99—77.1)

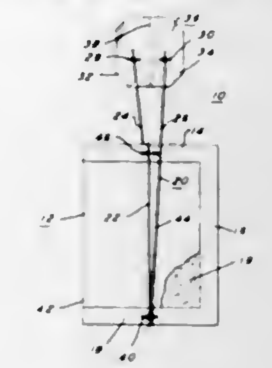

An infusion bag enclosing a quantity of infusible material and having a draw cord positioned about and over the top and bottom portions of said bag to provide at least one and one-half turns about said bag with first and second positioning means at the top and bottom of said bag for maintaining said cord about said bag, whereby forces applied to opposite ends of said cord compresses said bag to express steeping liquid therefrom.

3,396,033
WHEAT GERM AND SOYBEAN PROCESS FOR EXTRACTING GLUTATHIONE THEREFROM
Peter J. Ferrara, 50 E. 78th St., New York, N.Y. 10021, and Gaston Dalby, 51 5th Ave., New York, N.Y. 10011
No Drawing. Filed July 29, 1964, Ser. No. 386,073
12 Claims. (Cl. 99—80)

Reduction of glutathione in wheat germ and soybean products to the sulfhydryl compounds with a reducing agent and removing said compounds by means of an azeotropic solvent mixture.

3,396,034
PROCESS OF CONVERTING DIFFICULTLY DISPERSIBLE MATERIALS INTO A READILY DISPERSIBLE FORM AND PRODUCTS OBTAINED THEREBY
William S. Blondheim, Westfield, and Abner P. Patton, Springfield, N.J., assignors to Motomco Inc., Clark, N.J., a corporation of New Jersey
Continuation-in-part of applications Ser. No. 731,382, Apr. 28, 1958, Ser. No. 820,681, June 16, 1959, and Ser. No. 96,547, Mar. 17, 1961. This application Jan. 20, 1964, Ser. No. 338,957
35 Claims. (Cl. 99—93)

This invention has for its purpose to convert difficultly dispersible particulate, solid materials into a readily dispersible form. The process consists in subjecting a difficultly dispersible starting material or a finely divided solid material to pulsating vibration while on an inclined plane and exposing the solid material thereon to the action of a finely divided spray of a liquid agent or, respectively, a liquid reagent, said agent or reagent causing swelling of the treated or reacted material. Thereby, the angle of inclination of the inclined plane is such that the untreated or, respectively, unreacted material moves upwardly on said inclined plane, while the treated or, respectively, reacted, readily dispersible material moves downwardly thereon. The process is applicable to all types of material capable of swelling on contact with water or a liquid. Examples of such materials which are rendered more readily dispersible by this process are water soluble cellulose ethers, such as carboxy methyl cellulose; vegetable gums; farinaceous materials such as wheat flour; plastics, such as polyacrylamide, polyvinyl pyrrolidone; inorganic materials such as boric acid, fertilizers such as triple superphosphate; dyestuffs and pigments; and others. The process has also proved of great value in the production, by reaction, for instance, of readily dispersible detergents, salts such as sodium caseinate, calcium arsenate, sodium molybdate, amino acetic acid, phenol formaldehyde condensation products, bromo or nitro benzoic acid, and others.

The resulting treated materials or, respectively, reaction products are readily dispersible in water, dust-free, noncrumbling, and free-flowing, and their particles repel each other on contact with water. Thus, they do not agglomerate and ball up when added to water. They have a bulk density lower than that of the untreated material.

3,396,035
FREE FLOWING SHORTENING COMPOSITION
Gene L. Kessinger, Decatur, Ill., assignor to A. E. Staley Manufacturing Company, Decatur, Ill., a corporation of Delaware
No Drawing. Original application Dec. 16, 1963, Ser. No. 330,784. Divided and this application Apr. 28, 1966, Ser. No. 594,286
6 Claims. (Cl. 99—94)

A dry-to-the-touch shortening composition containing not more than 80% shortening and not less than 20% gelatinized starch, said gelatinized starch having a particle size which passes through a 40 mesh screen, a bulk density of from 4–10 pounds per cubic foot, a cold water solubility of not less than 20%, and a moisture content of not more than 11%. This composition can be used for preparing pie-dough mixes and the like.

3,396,036
POTATO FOOD PRODUCT
Alexander L. Liepa, Cincinnati, Ohio, assignor to The Procter & Gamble Company, Cincinnati, Ohio, a corporation of Ohio
Filed Aug. 15, 1963, Ser. No. 302,282
4 Claims. (Cl. 99—100)

A potato product suitable for frying is prepared by gently intermixing potato solids, milk solids, and water to provide a dough having, on a weight basis, from about 21% to about 46% potato solids, from about 1% to about 15% milk solids, and from about 53% to about 73% water, the combined milk solids-potato solids content being at least about 27% by weight. The dough can be formed into suitable shapes and either fried immediately or preserved for later use.

3,396,037
PROCESS FOR THE MANUFACTURE OF HARD BUTTER
Richard J. Bell, Robert L. Campbell, Jr., Paul Gibson, and Jay F. Sims, Sherman, Tex., assignors to Anderson, Clayton & Co., Sherman, Tex., a corporation of Delaware
No Drawing. Filed Aug. 11, 1964, Ser. No. 388,912
18 Claims. (Cl. 99—118)

Process for the manufacture of hard butter including rearranging lauric type oil or a mixture of at least 50% lauric type oil with certain other oils in the presence of a small amount of low temperature molecular rearrangement catalyst at temperatures below about 240° F., at a pressure less than about 50 mm. Hg abs., and for a time in excess of 30 minutes thereafter, deactivating the catalyst by the addition of an acid to form an anhydrous salt and removing the anhydrous salt by filtration.

3,396,038
CHEWING GUM
Edmund C. Knapp, Wilbraham, Mass., assignor to Monsanto Company, St. Louis, Mo., a corporation of Delaware
No Drawing. Application June 11, 1965, Ser. No. 463,350, which is a continuation-in-part of application Ser. No. 7,127, Feb. 8, 1960. Divided and this application July 31, 1967, Ser. No. 657,051
3 Claims. (Cl. 99—135)

Chewing gum comprising a water-insoluble, graft copolymer of vinyl acetate-polyoxyalkylene compound, filler, flavoring agent and sweetening agent.

3,396,039
PUMPABLE STABILIZER-EMULSIFIER INCORPORATING READILY DISPERSIBLE HYDROPHILIC COLLOIDS
Albert J. Leo, La Grange Park, and Edward Bielskis, Chicago, Ill., assignors to National Pectin Products Company, Chicago, Ill., a corporation of Illinois
No Drawing. Filed Sept. 29, 1965, Ser. No. 491,421
7 Claims. (Cl. 99—136)

Preparation of a stabilizer-emulsifier for foodstuffs by heating a mixture of water, and edible solvent and a monoglyceride, adding a fully divided hydrophilic colloid thereto and homogenizing the entire mixture.

3,396,040
PROCESS FOR PRESERVING CITRUS FRUIT FOOD PRODUCTS
Herman Cohen, 235 W. Winter Park Ave., Orlando, Fla. 32804
Continuation-in-part of application Ser. No. 348,849, Mar. 2, 1964. This application July 10, 1964, Ser. No. 381,783
4 Claims. (Cl. 99—186)

Preservation of peeled and sectionalized citrus fruits by cooking the fruit in a closed, partially vacuumized glass container at gauge pressures between 5 and 15 p.s.i. and at temperatures between 225° F. and 250° F. with subsequent cooling of the container and its contents.

3,396,041
METHOD OF PRODUCING REHYDRATABLE, FREEZE-DRIED PEANUT BUTTER PRODUCTS
Maurie Laskin, Milwaukee, Wis., assignor to W. R. Grace & Co., a corporation of Connecticut
No Drawing. Continuation-in-part of application Ser. No. 464,867, June 17, 1965, which is a continuation-in-part of application Ser. No. 324,240, Nov. 18, 1963. This application Mar. 1, 1967, Ser. No. 619,584
6 Claims. (Cl. 99—204)

Producing a rehydratable, cellular, freeze-dried peanut butter by admixing peanut butter with water, freezing at

atmospheric pressure to a hard solid and freeze-drying at low pressures.

3,396,042
CHEMICAL GOLD PLATING COMPOSITION
Robert Duva, Paramus, N.J., assignor to Sel-Rex Corporation, Nutley, N.J., a corporation of New Jersey
No Drawing. Filed Aug. 28, 1961, Ser. No. 134,106
9 Claims. (Cl. 106—1)

1. As a composition for chemically depositing gold an aqueous solution consisting essentially of 0.5–30 g./l. of a soluble gold cyanide, 0.01 to 30 g./l. of a soluble palladous salt, absent sufficient CN ions to prevent deposition induced by said palladous salt, and sufficient alkali to provide a pH of 8–11.

6. A process for depositing gold on a workpiece having a conducting surface comprising immersing the workpiece in an aqueous solution consisting essentially of 0.5–30 g./l. of a soluble gold cyanide, sufficient alkali to provide a pH of 8–11, in the presence of 0.01 to 30 g./l. of a soluble palladous salt, and in the absence of sufficient CN ions to prevent deposition induced by said palladous salt whereupon gold is deposited on said conducting surface by the chemical reduction process.

3,396,043
PROCESS FOR PRODUCING CELLULATED SILICA
John Alexander Winterburn, Tynemouth, North Shields, Northumberland, England, assignor to The Thermal Syndicate Limited, Northumberland, England, a British company
No Drawing. Filed Sept. 28, 1964, Ser. No. 399,912
Claims priority, application Great Britain, Sept. 27, 1963, 38,139/63
5 Claims. (Cl. 106—40)

Cellulated silica is produced by heating a homogeneous mixture of finely divided silica with from 0.1% to 5% by weight of finely divided metal selected from the group consisting of aluminum and silicon to a temperature between 1500° C., and 1800° C.

3,396,044
TEMPORARY HIGH TEMPERATURE PROTECTIVE COATING AGENTS FOR METALS
Walter R. Satterfield, Ellicott City, Md., assignor, by mesne assignments, to SCM Corporation, New York, N.Y., a corporation of New York
No Drawing. Filed June 9, 1966, Ser. No. 556,274
14 Claims. (Cl. 106—66)

A particulate refractory composition adapted for forming a temporary protective coating for metal and comprising (a) at least one crystalline refractory oxide, (b) at least one crystalline metal salt of an oxy anion, and (c) from about 3 to about 20% of a glass frit having an interferometer softening temperature between about 1000° F. and about 1900° F. and containing not substantially more than 5 weight percent ZnO and 6 weight percent fluorine, is described. Coating formulations comprising the refractory composition and a fugitive diluent and coated metal articles containing the coating formulations are also described. The invention is advantageous in that it provides compositions and formulations which protect metal objects such as ingots, bars, billets and other configurations from metal loss when such objects are exposed to temperatures within the range of 1000° F. to about 2500° F. Prior to the present invention, no single ceramic composition has been available which (1) provides the high degree of protection to a variety of metal surfaces, and (2) which is also operable over the wide temperature range described above.

3,396,045
SEALING COMPOUND FOR HIGH TEMPERATURE USE
Kurt Bysath, Henggart, Zurich, Switzerland, assignor to Sulzer Brothers, Ltd., Winterthur, Switzerland, a corporation of Switzerland
No Drawing. Filed July 17, 1967, Ser. No. 653,609
Claims priority, application Switzerland, July 20, 1966, 10,515/66
3 Claims. (Cl. 106—243)

The sealing compound is used for sealing joints in casting molds and is made in a cord-like strand of a mixture comprising a mineral oil capable of reacting with oleic acid, asbestos fiber and a pulverized calcium carbonate of commercial purity. The calcium carbonate can contain up to 10% by its weight of iron magnesium silicates.

3,396,046
SOLVENT DISPERSION OF SILICA PARTICLES AND TREATMENT OF POLYESTER AND POLYCARBONATE SUBSTRATES THEREWITH
Raphael Landau, Woodford Green, Essex, England, assignor to Ozalid Company Limited, Loughton, Essex, England, a British company
No Drawing. Filed Aug. 19, 1963, Ser. No. 303,181
Claims priority, application Great Britain, Aug. 22, 1962, 32,184/62
9 Claims. (Cl. 106—287)

8. A composition for treating the surface of polyester and polycarbonate materials, said composition comprising an aqueous dispersion containing from about 0.01% to about 10% by weight of silica of a particle size not greater than 5 microns, from about 0.1% to 20% by weight of a chloro-substituted organic acid selected from the group consisting of trichloroacetic, trichloropropionic and dichloroacetic acids, and from about 0.05% to 0.2% by weight of a sulphonated oil wetting agent.

3,396,047
BIAXIALLY ANISOTROPIC MAGNETIC THIN FILM STRUCTURE WITH MAGNETIC DISCONTINUITIES
Richard J. Prosen, Hopkins, Minn., assignor to Honeywell Inc., a corporation of Delaware
Filed Dec. 18, 1964, Ser. No. 419,400
6 Claims. (Cl. 117—8.5)

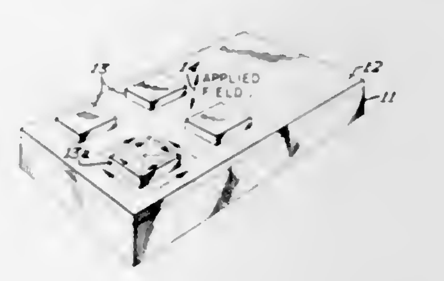

A magnetic thin film structure possessing biaxial anisotropy provided by the presence of substantially square magnetic discontinuities in the thin film.

3,396,048
PROCESS FOR ALUMINIZING METAL
Sidney E. Speed, Madison, Conn., assignor to Olin Mathieson Chemical Corporation, a corporation of Virginia
No Drawing. Filed Oct. 20, 1964, Ser. No. 405,233
11 Claims. (Cl. 117—51)

An improved process is disclosed for aluminizing metal articles whereby the article is coated with a metal hydride prior to immersion in the molten aluminum bath. The metal hydride decomposes at a temperature between 150° C. and 950° C.

3,396,049
CELLULOSIC SUBSTRATES COATED WITH STYRENE INTERPOLYMER LATEXES
George J. Anderson, Wilbraham, and Joel Fantl, Springfield, Mass., assignors to Monsanto Company, St. Louis, Mo., a corporation of Delaware
No Drawing. Filed July 2, 1964, Ser. No. 380,082
6 Claims. (Cl. 117—94)

Disclosed herein is a cellulosic paper substrate coated with a styrene interpolymer latex, said latex having been polymerized in the presence of a particular sole emulsifier, which emulsifier may be, for example, the ammonium salt of a partial ester of 2-butoxyethanol with a styrene maleic anhydride copolymer.

3,396,050
PROCESS OF REFINING TEXTILE MATERIALS CONTAINING NATURAL AND/OR REGENERATED CELLULOSIC FIBERS
Heinz Enders, Stadtbergen-Augsburg, and Günter Pusch, Leitershofen, Germany, assignors to Chemische Fabrik Pfersee G.m.b.H., Augsburg, Germany, a firm of Germany
No Drawing. Filed Aug. 31, 1964, Ser. No. 393,422
Claims priority, application Germany, Oct. 3, 1963, C 31,037
7 Claims. (Cl. 117—139.4)

Textile materials containing natural or regenerated cellulosic fibers are treated in a bath, whereby at most 45% of the bath in relation to the dry weight of the textile material is applied to the material, the bath containing a half acetal of formaldehyde with a 1 to 4-valent low aliphatic alcohol having from 1 to 6 carbon atoms, a strong inorganic acid or a very strongly acid reacting salt thereof and less than 32% water. The textile material is allowed to stand for a long time at normal temperature and is then rinsed, neutralized and dried.

3,396,051
CHEMICAL PROCESS FOR A POLYURETHANE ELASTOMER
Leroy E. Cox, Mercer Island, and Thomas D. Smith, Bellevue, Wash., assignors to Moulded Chemical Products, Inc., Seattle, Wash., a corporation of Washington
Filed Aug. 10, 1964, Ser. No. 388,504
8 Claims. (Cl. 117—161)

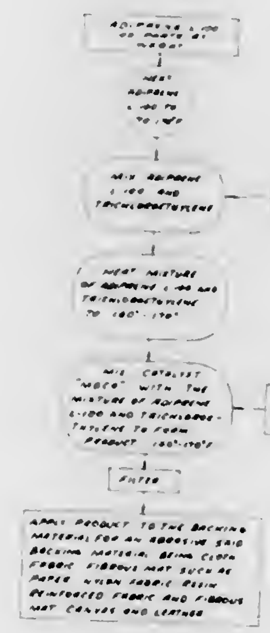

This invention relates to a process for the preparation of a liquid solution of a polyurethane elastomer and the application of this elastomer to a substrate. The application of the polyurethane elastomer to a substrate such as fabric, wood, plywood and the like enhances the wearing qualities of the substrate.

3,396,052
METHOD FOR COATING SEMICONDUCTOR DEVICES WITH SILICON OXIDE
Myron J. Rand, Bethlehem, Pa., assignor to Bell Telephone Laboratories, Incorporated, New York, N.Y., a corporation of New York
Filed July 14, 1965, Ser. No. 471,837
9 Claims. (Cl. 117—201)

This invention involves the formation of oxide films on semiconductor substrates by a chemical reaction of various volatile metal compounds in a gas phase in the presence of nitric acid and hydrogen.

3,396,053
PHOTOCONDUCTIVE TARGETS
Tamotsu Tojo, Kyoto, Japan, assignor to Matsushita Electronics Corporation, Osaka, Japan, a corporation of Japan
Filed Dec. 2, 1964, Ser. No. 415,344
Claims priority, application Japan, Dec. 14, 1963, 38/67,691
11 Claims. (Cl. 117—217)

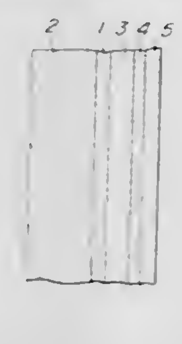

The lead monoxide layer of a target electrode for television cameras is stabilized against oxidative changes without substantial change in its photoconductive properties by application thereto of a thin film of a chalcogen with an outer thin film of silver on the chalcogen film. The chalcogen may be sulfur, selenium or tellurium, or combinations thereof, preferably selenium.

3,396,054
METHOD AND APPARATUS FOR METALLIC IMPREGNATION OF CARBON AND GRAPHITE
Robert Gremion, Saint-Leu-la-Foret, France, assignor to Societe le Carbone-Lorraine, Paris, France, a French body corporate
Filed Mar. 13, 1964, Ser. No. 351,621
Claims priority, application France, Mar. 18, 1963, 928,268
9 Claims. (Cl. 117—227)

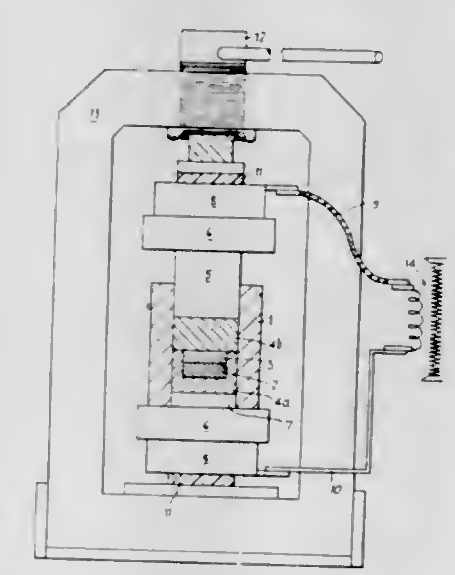

Carbon or graphite material is impregnated with a metal by surrounding it and the metal in solid form by

powdered natural graphite. The latter is sufficiently fluid or deformable to transmit the pressure and sufficiently impermeable to prevent the melted impregnating metal from penetrating through it when subjected to a pressure of 150 to 200 kg./cm.^{2} and heated by direct release of heat within the carbon or graphite material and the metal.

The present invention relates to processes for metallic impregnation, to apparatus therefor, and to members impregnated thereby.

The impregnation of graphite by means of molten metals such as copper, silver or lead is generally effected in an autoclave. After evacuation of the autoclave wherein the members to be impregnated are located in contact with the molten metal, a gaseous pressure may then be applied in order to aid impregnation. These operations using vacuum and pressure alternately may be repeated.

The present invention has for an object a new process for impregnation which does not necessitate the use of an autoclave and a gaseous pressure, while ensuring an equivalent rate of impregnation.

3,396,055
RADIANT HEATING PANELS AND RESISTIVE COMPOSITIONS FOR THE SAME
Walter A. Hedden, Worthington, and Donald J. Bowers and Burnham W. King, Jr., Columbus, Ohio, assignors, by mesne assignments, to Vitreous Steel Products Company, Cleveland, Ohio, a corporation of Delaware
No Drawing. Filed Apr. 16, 1965, Ser. No. 448,888
11 Claims. (Cl. 117—227)

7. A heating panel comprising a porcelain base and a resistive heating circuit mechanically bonded to said base, said circuit having a thickness of between about 0.008 to 0.010 inch and having a continuous conductive metal matrix comprising by weight between about 10 to 20 parts nickel-silver, said nickel-silver comprising by weight about 64 parts copper, about 18 parts nickel, and about 18 parts zinc; 10 to 20 parts antimony; up to 10 parts silver; between about 2 to 15 parts glass frit; and the balance tin.

3,396,056
ELECTRIC STORAGE BATTERIES
François Leon Georges Gonnard, Paris, France, assignor to Baroclem S.A., Courbevoie, Hauts-de-Seine, France, a corporation of France
Filed June 3, 1965, Ser. No. 460,945
Claims priority, application France, June 5, 1964, 977,248
6 Claims. (Cl. 136—6)

1. An electric storage battery comprising a casing divided into separate side-by-side cells, alternate insulated positive and negative plates disposed in each cell, each plate being provided with a shank which extends above the top of the cell, the shanks of one polarity in each cell being grouped at one end of the cell and the shanks of opposite polarty grouped at the opposite end of the cell and the groups of shanks of like polarity being disposed alternately at opposite ends of the side-by-side cells, a cell lid for each cell through which the shanks of the plates in the cell extend, an overall cover common to all cells and through which the plate shanks extend, unitary connecting pieces cast in situ from molten metal such as lead about and connecting shanks of groups of opposite polarity in adjoining cells with the exception of the group of one polarity of one end cell and the group of opposite polarity of the other end cell, an end connection piece for the group of shanks of said one polarity of one end cell and a separate end connection piece for the group of shanks of said opposite polarity of the other end cell, said end connection pieces being cast in situ from molten metal such as lead, and a pole post on each said end connection piece.

3,396,057
METHOD OF ELECTROLYTICALLY BINDING A LAYER OF SEMICONDUCTORS TOGETHER
James E. Webb, Administrator of the National Aeronautics and Space Administration, with respect to an invention of Sidney G. Ellis, Princeton, N.J.
Filed Nov. 10, 1964, Ser. No. 410,330
7 Claims. (Cl. 136—89)

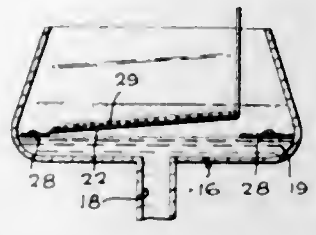

This invention teaches a method of binding a layer of semiconductor particles together. Electro-deposition is used to form an insulating film that holds the particles together. The particles can be used in making solar cells, photoelectric cells and other semiconductor products. Essentially, the particles are deposited on the surface of mercury. The particles float on the mercury. They are compacted and then covered with an electrolyte. One electrode is inserted in the electrolyte while the mercury serves as the other electrode. After the layer is formed, the level of the mercury is lowered so that the now formed layer will adhere to a base member previously submerged in the mercury.

3,396,058
ONE-PIECE "FOLD-OVER" BATTERY TERMINAL
Richard L. Patterson, Bennington, Vt., assignor to Union Carbide Corporation, a corporation of New York
Filed Nov. 15, 1965, Ser. No. 507,874
1 Claim. (Cl. 136—134)

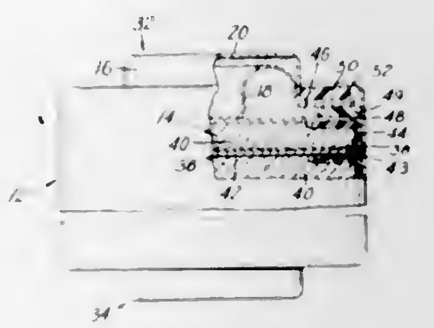

A unitary battery terminal contact member with an outer contact portion and an inner contact portion joined together by an intermediate section which is folded upon itself to resiliently position said contact portions in back-to-back relationship with oppositely directed contact surfaces.

3,396,059
PROCESS OF GROWING SILICON CARBIDE P-N JUNCTION ELECTROLUMINESCING DIODES USING A MODIFIED TRAVELLING SOLVENT METHOD
Rosario P. Giammanco, North Reading, Mass., assignor to National Research Corporation, Cambridge, Mass., a corporation of Massachusetts
No Drawing. Filed Sept. 14, 1964, Ser. No. 396,393
1 Claim. (Cl. 148—171)

The process for growing sharp essentially void-free and intrinsic-"i"-region-free silicon carbide P-N junction diodes using a modified travelling solvent method wherein P and N silicon carbide crystals coated on the contacting surfaces with a stratum of chromium are placed in a carbon susceptor heater in a sandwich-like fashion with a piece of chromium about 10% of the weight of the feed crystal placed at one edge of the silicon carbide sandwich, said sandwich system being subjected to a two-step heating process, the first step of the heating process being approximately 100° C. cooler than the second step.

3,396,060
INCENDIARY COMPOSITION CONSISTING OF TITANIUM, ALUMINUM-MAGNESIUM ALLOY, AND INORGANIC OXIDIZER SALT
Marshall Piccone, Denver, Colo., assignor, by mesne assignments, to the United States of America as represented by the Secretary of the Army
No Drawing. Filed Nov. 2, 1960, Ser. No. 66,892
3 Claims. (Cl. 149—42)

1. An incendiary composition for projectiles consisting of between about 5% to 75% by weight of titanium of a size about 20 to 60 mesh, between about 47½% and 12½% by weight of a powdered 50/50 alloy of aluminum and magnesium, and between about 47½% and 12½% by weight of a powdered inorganic oxidizing salt.

3,396,061
SMOKE FILTERS
Colin L. Browne, Charlotte, N.C., assignor to Celanese Corporation, a corporation of Delaware
Filed June 1, 1964, Ser. No. 371,248
13 Claims. (Cl. 156—178)

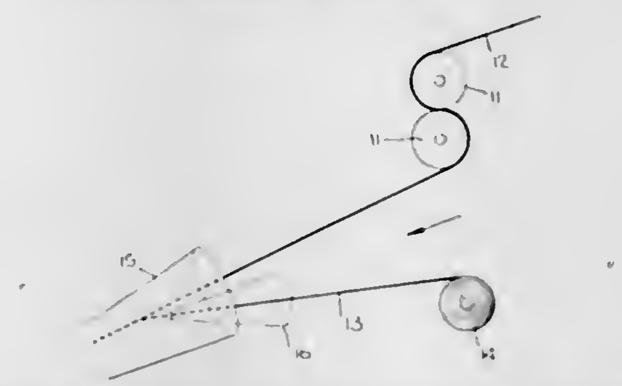

A filter rod containing two condensed webs disposed in generally longitudinal alignment, preferably interfacially cohered with an adhesive agent, each of said webs forming a significant portion of the filter cross section, and a process for preparing same comprising concurrently feeding said webs to the garniture of a cigarette filter rodmaker, and condensing said webs together into a single continuous rod in a cross-sectional configuration wherein the effective filtration cross section comprises elements of each of the webs.

3,396,062
METHOD FOR MOLDING A COMPOSITE FOAMED ARTICLE
James C. White, Lynnfield, Mass., assignor to Sweetheart Plastics, Inc., Wilmington, Del., a corporation of Maryland
Filed July 27, 1964, Ser. No. 385,212
28 Claims. (Cl. 156—244)

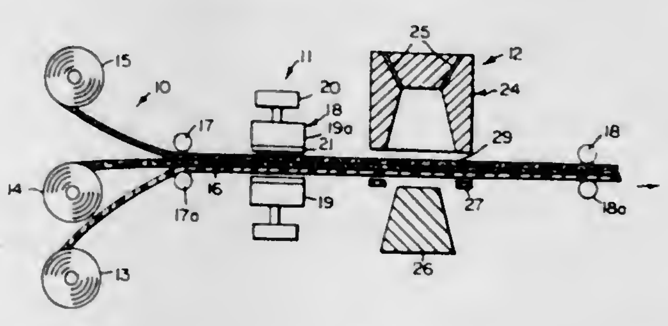

A method of thermoforming foam plastic insulated articles is provided where at least one layer of a cellular foamed thermoplastic material is heated by contact heating and the heat of said contact heating is used in the thermoforming molding step. Preferably at least one sheet of foam plastic is used in combination with a solid thermoplastic liner and contact heating is used to derive the heat necessary for molding.

3,396,063
LACQUER AND GLUE AND PROCESSES OF USING THE SAME
Jean-Marie Massoubre, Clermont-Ferrand, France, assignor to Compagnie Generale des Etablissements Michelin, raison sociale Michelin & Cie, Clermont-Ferrand, Puy-de-Dome, France
No Drawing. Filed Jan. 21, 1964, Ser. No. 339,092
Claims priority, application France, Jan. 23, 1963, 922,357
10 Claims. (Cl. 156—331)

1. A lacquer and glue especially adapted for the protection of metallic surfaces against corrosion and for the gluing without other glues of polyurethane elastomers thereon which is a solution comprising an organic solvent and a solute mixture dissolved therein of (1) an organic polyisocyanate, (2) from about 10% to about 200% based on the weight of the polyisocyanate of an unsaturated polyester resin free of styrene plasticizer having a hydroxyl number and an acid number both ranging from 20 to 120, (3) from about 0.1 to about 0.4 mole per free isocyanate groups in the polyisocyanate of an unsaturated compound which is reactive with respect to isocyanate, said unsaturated compound having an unsaturated radical selected from the group consisting of vinyl and allyl and having a functional group selected from the group consisting of amine and alcohol, and (4) from about 1% to about 6% based on the weight of the polyester resin of an organic peroxide.

9. A method for the protection of metallic surfaces against corrosion which comprises applying a coating of a lacquer and glue which is a solution comprising an organic solvent and a solute mixture dissolved therein of (1) an organic polyisocyanate, (2) from about 10% to about 200% based on the weight of the polyisocyanate of an unsaturated polyester resin free of styrene plasticizer having a hydroxyl number of an acid number both ranging from 20 to 120, (3) from about 0.1 to about 0.4 mole per free isocyanate groups in the polyisocyanate of an unsaturated compound which is reactive with respect to isocyanate, said unsaturated compound having an unsaturated radical selected from the group consisting of vinyl and allyl and having a functional group selected from the group consisting of amine and alcohol, and (4) from about 1% to about 6% based on the weight of the polyester resin of an organic peroxide, to the metallic surface and heating the coating at a temperature from about 150° C. to about 300° C. for from about 1 to about 15 minutes to harden the coating.

3,396,064
CONTINUOUS LAMINATING METHOD AND APPARATUS
Reuben F. Hoffmann, Algoma, Wis., assignor to U.S. Plywood-Champion Papers Inc., a corporation of New York
Filed Jan. 10, 1964, Ser. No. 337,012
10 Claims. (Cl. 156—335)

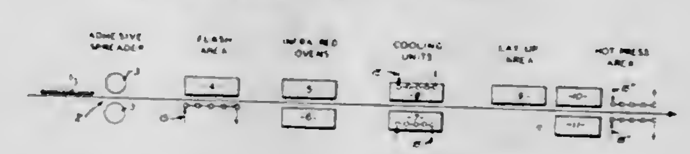

A precatalyzed phenolic wet glue, apparatus, and process having the handling advantages of a dry glue line lay-up whereby the fast, substantially continuous process

will increase through-put and increase quality by eliminating or reducing glue bleed-through and starved glue lines, and moisture content of the plies are not so critical.

3,396,065
PROCESS OF BONDING TEXTILE MATERIALS TO RUBBER
Eric Alexander Ney, Nunawading, Australia, assignor to Dunlop Rubber Company Limited, London, England, a British company
No Drawing. Filed Oct. 28, 1964, Ser. No. 407,211
Claims priority, application Australia, Nov. 13, 1963, 37,635/63
19 Claims. (Cl. 156—335)

Textile materials can be bonded to rubbers using as the adhesive composition an aqueous dispersion of an incompletely condensed phenolic resin and a copolymer prepared from allylamine and at least one conjugated diene monomer.

3,396,066
APPARATUS FOR PLACING CARCASS LAYERS ON A TIRE BUILDING DRUM
Heinrich Nädler, Neustadt am Rubenberge, Germany, assignor to Continental Gummi-Werke AG., Hannover, Germany
Filed July 27, 1964, Ser. No. 385,285
Claims priority, application Germany, July 30, 1963, C 30,583
8 Claims. (Cl. 156—401)

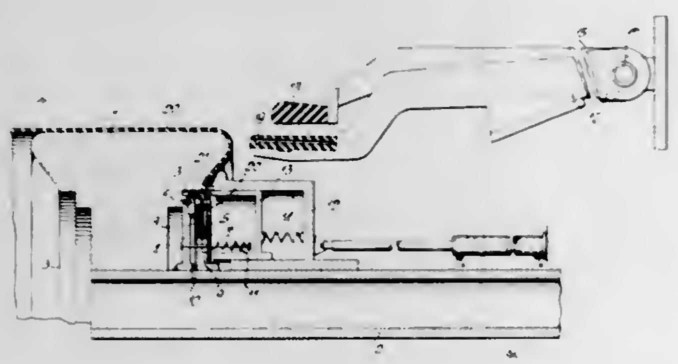

A tire building machine having a tire building drum with side portions for engagement with marginal carcass portions to be provided with bead core means, in which an annular flexible inflatable folding member with two oppositely located marginal portions has its outer periphery arranged adjacent to a side portion of said drum for folding a marginal carcass portion thereon around bead core means placed on said last mentioned marginal carcass portion, while first clamping means hold one marginal portion of said folding member and second clamping means movable relative to said first clamping means hold the other portion of said folding member, at least one of said two marginal portions of said folding member being held by its respective clamping means therefor so as to be movable to a limited extent in radial direction of the drum.

3,396,067
RESINOUS PRODUCT SIMULATING ONYX
Kenneth A. Schafer, Pittsburgh, Pa., assignor, by mesne assignments, to Mira Chem, Incorporated, Oakland Park, Fla., a corporation of Delaware
Continuation-in-part of application Ser. No. 296,106, July 18, 1963. This application Dec. 3, 1964, Ser. No. 415,692
10 Claims. (Cl. 161—5)

1. A manufactured product comprising:
a monolayered solid matrix of a transparent thermoset copolymer of an ethylenically unsaturated polyester and a compatible liquid monomeric polymerizable compound containing an ethylenic linkage and a finely divided transparent inorganic filler homogeneously embedded in said thermoset copolymer, the indices of refraction of said copolymer and said filler being matched so that the filler is invisible, said filler being of a gradation of particle sizes up to the

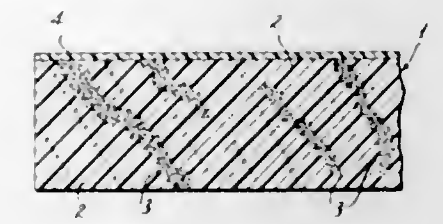

maximum size which will pass through a sieve of 100 mesh; and
an opaque finely divided filler visibly embedded in said matrix in the form of separated striations irregularly arranged in depth.

3,396,068
LEATHER JOINTING
Edwin H. Beck, Lemay, Mo., assignor to Manufacturers Supplies Company, St. Louis, Mo., a corporation of Missouri
Filed Nov. 20, 1964, Ser. No. 412,754
15 Claims. (Cl. 161—38)

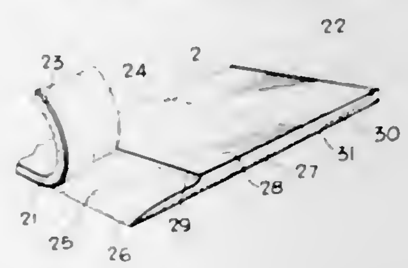

1. An article composed of a plurality of pieces of leather-like material united together in a scarf-lap-joint, said scarf-lap-joint being characterized by the feature that the piece of said material having the underlap portion of said scarf-lap-joint has
(a) a shoulder adjacent the intersection of the scarf with the obverse surface of the underlap, said shoulder being curvilinear (as viewed edgewise),
(b) a feather adjacent the intersection of the scarf with the reverse surface of the underlap,
(c) a bevel extending for a substantial distance between said shoulder and said feather,
(d) the slope of said curvilinear shoulder being substantially steeper than the slope of said bevel,
and the piece of said material having the overlap portion of said scarf-lap-joint has
(e) a feather adjacent the intersection of the scarf with the obverse surface of the overlap, said feather being curvilinear (as viewed edgewise),
(f) a bevel substantially corresponding in slope and length to the bevel on the underlap,
(g) the slope of said curvilinear feather (e) being substantially steeper than the slope of said bevel (f).

3,396,069
WOOD CHIP
Kenneth C. Logan and Ola Sepall, Quebec, Quebec, Canada, assignors to Anglo Paper Products, Limited, Quebec, Quebec, Canada
Continuation-in-part of abandoned application Ser. No. 258,697, Feb. 15, 1963. This application Nov. 20, 1964, Ser. No. 412,795
6 Claims. (Cl. 161—117)

Wood chips for paper making pulp each being of curved contour whereby one major surface is convexly curved and the other major surface is concavely curved, there

being a plurality of cracks in the convexly curved surface extending in the grainwise direction of the wood. Each

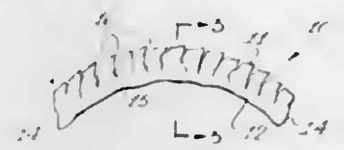

chip has a thickness of about 0.1 to about 0.3 inch and a maximum dimension from end to end and from side to side of six inches.

3,396,070
AUTOMOBILE HEADLINER
Ulysses T. Gambill, Newark, and William R. Thomas, Granville, Ohio, assignors to Owens-Corning Fiberglas Corporation, a corporation of Delaware
Filed Feb. 28, 1964, Ser. No. 348,028
5 Claims. (Cl. 161—119)

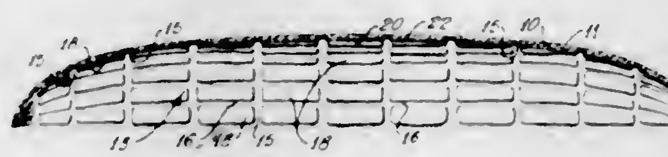

The wall panel (automobile headliner) has a main, porous body of molded fibrous material (glass) and a porous, flexible (foamed resin) facing sheet reproducing decorative surface configurations of the main body. The facing sheet is preferably adhered by a thin, imperforate resinous film to the main body, and the film seals colored binder within the main body and thereby prevents the binder from staining the facing sheet, and the film also transmits by vibration sound energy into the main body for attenuation thereby.

3,396,071
NON-WOVEN POLYPROPYLENE FABRICS
Peter John Couzens, Harrogate, England, assignor to Imperial Chemical Industries Limited, London, England, a corporation of Great Britain
No Drawing. Filed Mar. 2, 1964, Ser. No. 348,796
Claims priority, application Great Britain, Mar. 25, 1963, 11,698/63
3 Claims. (Cl. 161—150)

1. Non-woven fabrics consisting wholly of consolidated, blended stereoregular polypropylene fibres comprising at least 10% by weight of undrawn fibres having a birefringence of less than 20×10^{-3} and an extension at break of more than 100% and being selected from the group consisting of melt spun stereoregular polypropylene fibres and solution spun stereoregular polypropylene fibres and up to 90% by weight of drawn, substantially fully oriented stereoregular polypropylene fibres having a briefringence above 25×10^{-3}, an extension at break of less than 70% and a free shrinkage at 140° C. of at least 10%, said undrawn and drawn fibres having the same molecular structure and at least a proportion of the fibres having been bonded together at the fibre cross-over points as a result of the softening of the fibres thereat.

3,396,072
CAMELBACK
Merritt W. Wolfe, Akron, Ohio, assignor to The Goodyear Tire & Rubber Company, Akron, Ohio, a corporation of Ohio
Continuation-in-part of application Ser. No. 132,130, Aug. 17, 1961. This application Jan. 29, 1964, Ser. No. 342,333
2 Claims. (Cl. 161—151)

Camelback is provided on its undersurface with a rubber ply containing discrete lengths of filamentary mate-

rial. Such a ply gives good adhesion to the abraded and adhesive-covered carcass of an old tire to be retreaded.

3,396,073
FILTER TOW OF CRIMPED CONTINUOUS POLYOLEFIN FILAMENTS
George P. Touey and Robert C. Mumpower II, Kingsport, Tenn., assignors to Eastman Kodak Company, Rochester, N.Y., a corporation of New Jersey
Continuation-in-part of application Ser. No. 65,941, Oct. 31, 1960, which is a continuation-in-part of application Ser. No. 664,157, Jan. 7, 1957, now Patent No. 2,966,157. This application May 5, 1966, Ser. No. 547,925
5 Claims. (Cl. 161—173)

The invention relates to a tow of crimped continuous filament polyolefin fibers useful for fabrication into tobacco smoke filters. The individual fibers are crimped at least 18 crimps per inch to provide effective filter elements of acceptable firmness without undue pressure drop.

3,396,074
LAMINATED SAFETY GLASS
Donald I. Christensen, East Longmeadow, Mass., assignor to Monsanto Company, St. Louis, Mo., a corporation of Delaware
No Drawing. Filed Aug. 3, 1965, Ser. No. 476,991
15 Claims. (Cl. 161—199)

8. An improved laminated safety-glass comprising two layers of glass bonded to a plasticized polyvinyl acetal interlayer; said interlayer having a moisture content of 0.1 to 0.8% by weight and containing from 0.01 to 3.0 parts by weight per hundred parts by weight of resin of at least one fluoride compound selected from the group consisting of fluorides of the alkali metals, calcium, antimony, beryllium, cadmium, germanium, silver, tin, zinc, silicates and borates.

3,396,075
GLASS ARTICLES
John W. Morris, Tarentum, Pa., assignor to Pittsburgh Plate Glass Company, Pittsburgh, Pa., a corporation of Pennsylvania
Continuation of abandoned application Ser. No. 224,894, Sept. 17, 1962. This application May 19, 1966, Ser. No. 557,594
6 Claims. (Cl. 161—199)

This invention is directed towards strengthened soda glass articles. The invention particularly relates to windshields of soda-silica glass which have been strengthened by exchange below the strain point of the glass of a potassium ion for a sodium ion of the glass. The invention especially pertains to thin windshields having a compressive surface layer.

3,396,076
METHOD OF RECOVERY OF CHEMICAL VALUES OF A KRAFT PULPING PROCESS OF CELLULOSIC MATERIAL
Hartzell L. Crosby, Federal Way, and John R. Parkinson, Bellevue, Wash., assignors to Parkinson, Crosby & Works, Inc., Seattle, Wash., a corporation of Washington
Filed Dec. 10, 1964, Ser. No. 417,274
3 Claims. (Cl. 162—33)

Method and apparatus for recovery of chemical values from the alkaline effluent resulting from the bleaching stage of a kraft pulping process, and for the recovery of relief and non-condensable gases. The alkaline effluent

from the bleach plant is charged into the flue gas evaporator-scrubber as the scrubbing medium for the flue gases. It is then fed to the black liquor evaporators after which both the alkaline effluent and the black liquor are fired into the recovery furnace to recover primarily disodium chemical values. Use of the alkaline effluent as a flue gas scrubbing medium reduces odor omission from the recovery furnace stack. Relief gases and non-condensable gases evolved from the various stages of the pulping plant are directed to the furnace and fired therein below the black liquor firing zone. An auxiliary firing zone is established above the black liquor firing zone where volatilized sulphur containing components pass through direct flame with excess air so that they are oxidized.

3,396,077
MANUFACTURE OF RADIO-ISOTOPES
Musat V. Bodnarescu, Mol-Donk, Belgium, assignor to European Atomic Energy Community (Euratom), Brussels, Belgium
Continuation-in-part of application Ser. No. 404,537, Oct. 16, 1964. This application Sept. 14, 1966, Ser. No. 579,414
Claims priority, application Belgium, Oct. 18, 1963, 512,159
4 Claims. (Cl. 176—15)

An irradiation capsule for use in a control rod of a nuclear reactor for the production of radioisotopes in epithermal and fast neutrons. The capsule comprises an outer tubular shield in which a target material is enclosed, the shield being closed at the ends thereof by stoppers. The lower stopper is provided with spacing members to center the capsule within the control rod and have them rest on a shoulder formed at the lower end of the control rod. These spacing members are retractable within the periphery of the lower stopper to allow removal of the capsule from the control rods. A pair of telescopic tubes are provided at the top of the capsule, the lower tube being secured to the upper stopper and the upper tube being provided with laterally projecting spacers intended to be pressed against a shoulder at the upper end of the control rod by means of a spring cooperatively mounted on the two telescopic tubes to move them away from one another.

3,396,078
FUEL ARRANGEMENT FOR FAST BREEDER REACTOR
Sidney Visner, West Hartford, Conn., assignor to Combustion Engineering, Inc., Windsor, Conn., a corporation of Delaware
Filed Dec. 23, 1966, Ser. No. 604,478
12 Claims. (Cl. 176—17)

A fuel arrangement for a fast breeder reactor to lower or make negative the coolant void or coolant density coefficient of reactivity. The core fuel material and the blanket breeding material are arranged in a three dimensional checkerboard so as to provide enhanced neu-

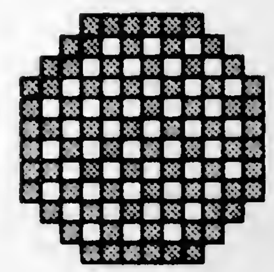

tron leakage from the fuel material to the blanket material upon a reduction in the coolant density or a voiding of the coolant.

3,396,079
THERMAL INSULATION FOR AN INTERNALLY HEATED HOT TUBE IMMERSED IN A COLD LIQUID
Sergio Finzi, Masnago, and Jacques F. Fauré and Jean P. Lebrun, Cocquio, Italy, assignors to European Atomic Energy Community (Euratom), Brussels, Belgium
Filed June 3, 1966, Ser. No. 555,191
Claims priority, application Belgium, June 16, 1965, 14,213, Patent 665,555
4 Claims. (Cl. 176—43)

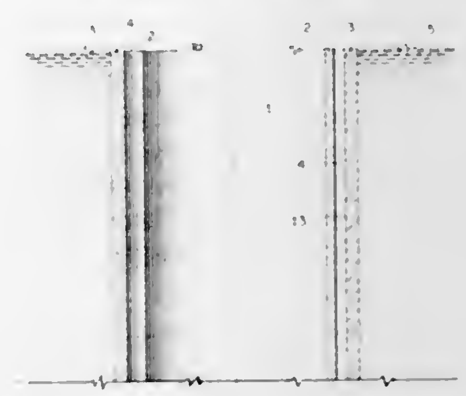

A thermal insulation for a hot tube immersed in a relatively cold liquid comprising a casing of porous and flexible material disposed concentrically around the hot tube and spaced a distance of a few millimeters therefrom so as to bound an annular jacket of vapor of said liquid.

3,396,080
TUNGSTEN-RHENIUM COATED CERAMIC REACTOR FUEL PARTICLES
Charles E. Hamrin, Jr., Oak Ridge, Tenn., assignor to the United States of America as represented by the United States Atomic Energy Commission
No Drawing. Original application Oct. 22, 1965, Ser. No. 502,690, now Patent No. 3,343,979, dated Sept. 26, 1967. Divided and this application Apr. 19, 1967, Ser. No. 656,965
2 Claims. (Cl. 176—67)

Spherical ceramic nuclear reactor fuel particles are provided with a uniform bonded coating of tungsten-rhenium metal alloy.

3,396,081
HYALURONIC ACID PREPARATION AND METHOD OF PRODUCING SAME
Gerhard Billek, Hamburg-Schenefeld, Germany, assignor to Etapharm chem. pharm. Laboratorium Gesellschaft m.b.H., Vienna, Austria
No Drawing. Filed Mar. 16, 1966, Ser. No. 534,632
Claims priority, application Austria, Mar. 17, 1965, A 2,404/65
5 Claims. (Cl. 195—7)

Hyaluronic acid preparation composed of a solution of hyaluronic acid free from proteins, antigens and pyrogens and method of producing this preparation.

3,396,082
GLUCAN PRODUCTION BY FERMENTATION OF FLESHY FUNGI
Edwin N. Davis, Robert A. Rhodes, and Lowell L. Wallen, Peoria, Ill., assignors to the United States of America as represented by the Secretary of Agriculture
No Drawing. Filed June 9, 1965, Ser. No. 462,760
1 Claim. (Cl. 195—31)

Excellent yield of β-1,3-glucan polysaccharides are obtained by fermenting mycelium of certain fungi classified as species of Helotium and Plectania under aerobic conditions in a tap water medium initially containing about 4 percent by weight of an assimilable mono- or disaccharide and 0.5 percent by weight of defatted soy flakes, and harvesting the so produced destructable glucan very soon after the disappearance of the nutrient sugar.

3,396,083
PREFERENTIAL PRODUCTION OF CEPHALOSPORIN C, PENICILLIN N, OR CEPHALOSPORIN P
Donald Sidney Callow, Winterslow, Salisbury, England, assignor to National Research Development Corporation, London, England
Filed Apr. 7, 1965, Ser. No. 446,338
Claims priority, application Great Britain, Apr. 10, 1964, 14,896/64
4 Claims. (Cl. 195—36)

A process for the preferential production of any one of the antibiotics cephalosporin C, penicillin N and cephalosporin P produced by the *Emericellopsis-Cephalosporium* genera of fungi to a relatively greater extent than the other two wherein an *Emericellopsis-Cephalosporium* fungus is grown in a steady-state continuous-flow culture, and wherein cephalosporin C is preferentially produced by maintaining the pH of a culture medium in which nitrogen is the limiting nutrient between 7.25 and 7.8, penicillin N is preferentially produced by maintaining at a pH of at least 7.75 a culture medium in which carbon is the limiting nutrient or cephalosporin P is preferentially produced by maintaining the pH of a culture medium in which carbon or nitrogen is the limiting nutrient at between 5.0 and 5.75.

3,396,084
TEST CHAMBER FOR GROWTH AND METABOLISM STUDIES OF BIOLOGICAL CELLS
Laurence A. Irvine, Takoma Park, Md., assignor to the United States of America as represented by the Secretary of the Air Force
Filed Apr. 20, 1965, Ser. No. 449,656
4 Claims. (Cl. 195—127)

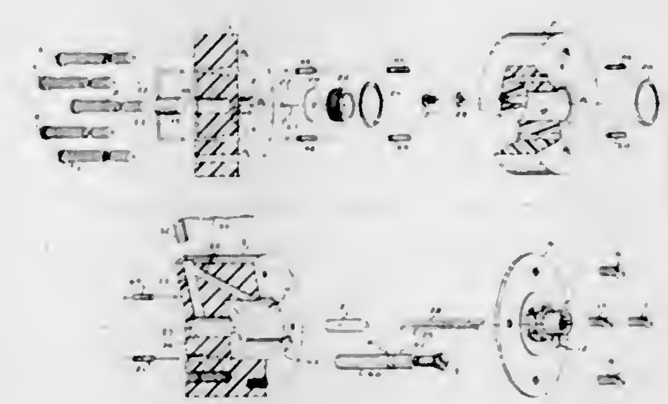

1. A biocell test device comprising: a light permeable hermetically sealed chamber for containing an aqueous electrolytic solution; light permeable enclosure means contained within said chamber for containing an inoculum of resting cells; a rupturable elastic membrane forming a part of said enclosure; electrolytic means for electrolysis of said electrolytic solution; piercing means for rupturing said membrane responsive to said electrolysis of said electrolytic solution; electric disconnecting means for interrupting said electrolysis; light emitting means exterior to said chamber and positioned so as to traverse said enclosure; and light sensing means providing an output potential responsive to light traversing said chamber and enclosure; said light sensing means connected to said electric disconnecting means and responsive to the light transmitting characteristics of said chamber and enclosure.

3,396,085
WIPED FILM EVAPORATOR
Erwin J. Nunlist, Penfield, N.Y., assignor to Ritter Pfaudler Corporation, Rochester, N.Y., a corporation of New York
Filed July 21, 1966, Ser. No. 566,978
2 Claims. (Cl. 202—187)

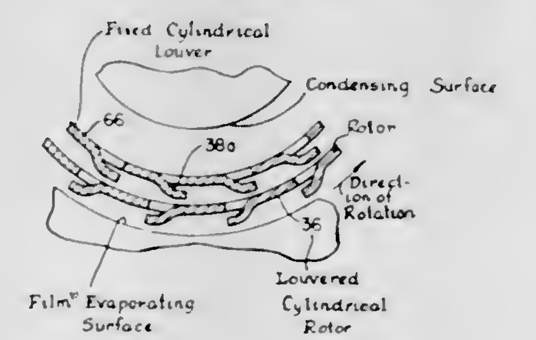

1. Distillation apparatus comprising in combination:
(a) a chamber having an internal surface of revolution upon which liquid is caused to flow, wiped to film thickness, and evaporated;
(b) a condenser positioned within said chamber for condensing the vapor formed within said chamber;
(c) a wiper assembly mounted upon a rotor body positioned within said chamber between the surface upon which vaporization occurs and the condenser; and
(d) said rotor body having a multiplicity of louvers formed on the surface of said rotor body, said louvers opening in a direction opposite the direction of rotation;

whereby, during the operation of said apparatus, vapor formed on the internal surface of said chamber may pass through said louvers to said condenser and liquid formed within said chamber is deflected back toward said internal surface.

3,396,086
RECOMPRESSION EVAPORATORS
Roy Starmer, Cullercoats, North Shields, Northumberland, England, assignor to Applied Research and Engineering Limited, Peterlee, England, a British company
Filed Dec. 23, 1964, Ser. No. 420,724
1 Claim. (Cl. 202—183)

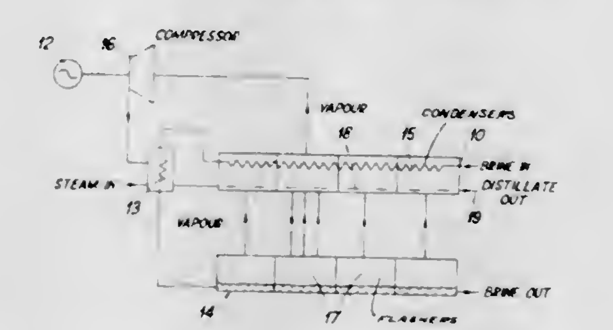

This invention provides improved apparatus and processes for the evaporative distillation of liquids having solid particles in solution wherein at least some of the vapor from the evaporator is brought into contact with a liquid distillate discharged from the evaporator before the vapor passes to the compressor. The vapor is thereby washed

to remove undesirable particles from the liquid to prevent their accumulation in, and subsequent fouling of, the compressor.

3,396,087
DIMETHYLTEREPHTHALATE RECOVERY FROM PARAXYLENE FEED
Billy E. Claybaugh, James K. Nickerson, and John M. Powers, Baytown, Tex., assignors to Esso Research and Engineering Company
Filed Jan. 10, 1966, Ser. No. 519,765
1 Claim. (Cl. 203—6)

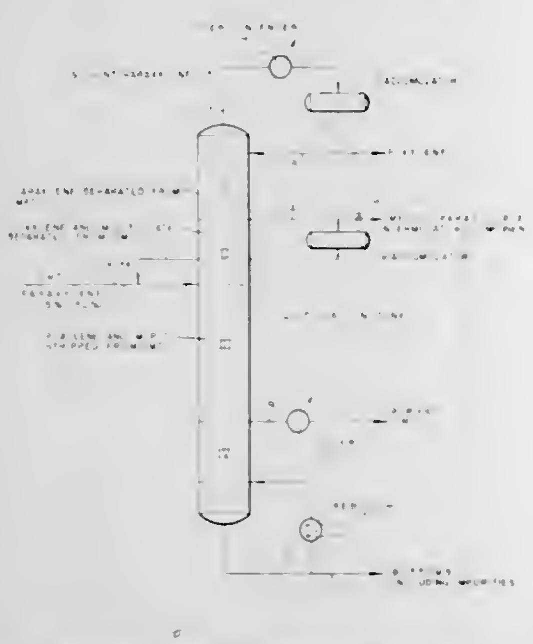

A feed solution of dimethylterephthalate (DMT) in paraxylene containing methylparatoluate (MPT) and high boiling impurities is distilled at 200 to 300 mm. Hg pressure to recover purified DMT by charging the feed solution to a distillation tower and recovering p-xylene as an overhead fraction, purified DMT being recovered as an intermediate fraction and high boiling impurities are discarded as bottoms. The DMT is prevented from solidifying in the column by maintenance of a specified amount of MPT in the column by introduction of MPT with the feed and by recycling MPT withdrawn from above the feed inlet to the feed inlet.

3,396,088
ROTARY MULTI-COMPARTMENT DISTILLATION DRUM HAVING RADIALLY ADJUSTABLE OUTLET TO VARY THICKNESS OF LIQUID LAYER
Emile Bechard, Paris, France, assignor of fifty percent to Rene G. LeVaux
Filed Apr. 1, 1964, Ser. No. 356,434
4 Claims. (Cl. 202—238)

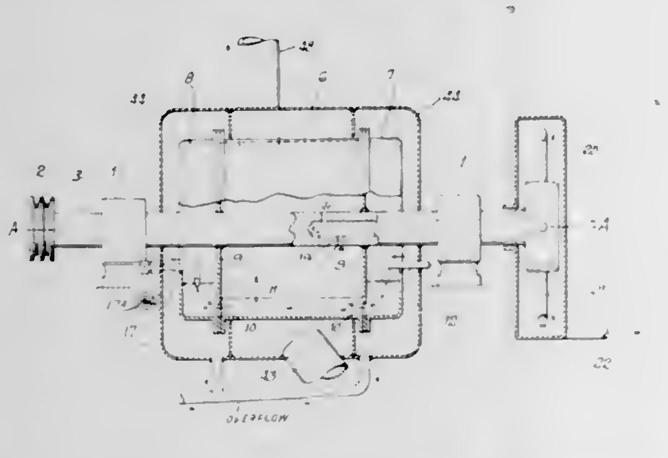

1. A device for the treatment of a liquid comprising a drum mounted for rotational movement about a horizontal axis, means for rapidly rotating the drum about its axis at a rate sufficient to generate centrifugal force greater than that of gravity, a pair of axially spaced radially extending partitioning members secured for rotation with said drum and subdividing the drum into a central compartment and outer compartments on each side of the central compartment and openings in the partitioning members adjacent the peripheral surfaces of the drum whereby the central compartment communicates with each of the outer compartments, a stationary inlet extending into one of the outer compartments for introduction of liquid to be treated, a stationary outlet extending into the other of the outer compartments with means for radial adjustment of the outlet for adjusting the thickness of the layer of liquid retained on the peripheral surfaces of the compartments during rotational movement of the drum, vapor outlet conduit means in communication with the interior of the central compartment inwardly of the liquid level during rotational movement of the drum and extending axially within the compartments for drawing off vapors given off by the liquid in the drum, and means for heating the peripheral surface of the central compartment whereby, during rotational movement of the drum, the layer of the liquid on the peripheral surface of the drum having a thickness at least as great as the radial height of the openings communicating the drums will separate in response to gravity with the heavier and colder liquid adjacent the outer peripheral surfaces of the drum and the lighter and hotter liquid at the interior surfaces of the liquid layer for release of vapors at the interior of the drum to be taken off through said outlet means.

ERRATUM

For Class 203—6 see:
Patent No. 3,396,087

3,396,089
PROCESS FOR SEPARATING 2-CHLOROBUTADIENE - (1,3) FROM TRANS - 2-CHLOROBUTENE-(2)
Kurt Sennewald, Knapsack, near Cologne, Heinz Erpenbach, Surth, near Cologne, Wilhelm Vogt, Knapsack, near Cologne, and Herbert Joest, Cologne-Sulz, Germany, assignors to Knapsack Aktiengesellschaft, Knapsack, near Cologne, Germany, a corporation of Germany
Filed Dec. 27, 1966, Ser. No. 604,681
Claims priority, application Germany, Jan. 19, 1966, K 58,175, Patent 1,249,254
5 Claims. (Cl. 203—70)

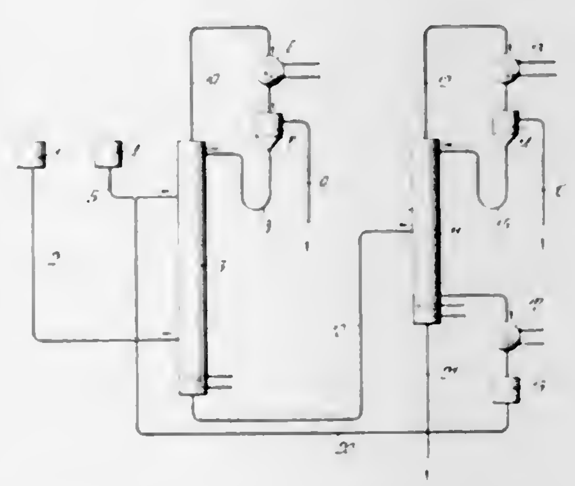

2 - chlorobutadiene - (1,3) contaminated with trans-2-chlorobutene-(2) is purified by vaporizing the contaminated 2-chlorobutadiene-(1,3) and scrubbing the vaporized matter with at least 5 times the amount by volume of liquid n-heptane or iso-octane, referred to the liquid volume of the contaminated 2-chlorobutadiene-(1,3), to remove the trans-2-chlorobutene-(2).

3,396,090
RECOVERY OF SULFOLANE BY DISTILLATION WITH PRE-VAPORIZATION
Harry M. Van Tassell, Arlington Heights, Ill., assignor to Universal Oil Products Company, Des Plaines, Ill., a corporation of Delaware
Filed June 29, 1966, Ser. No. 561,429
5 Claims. (Cl. 203—73)

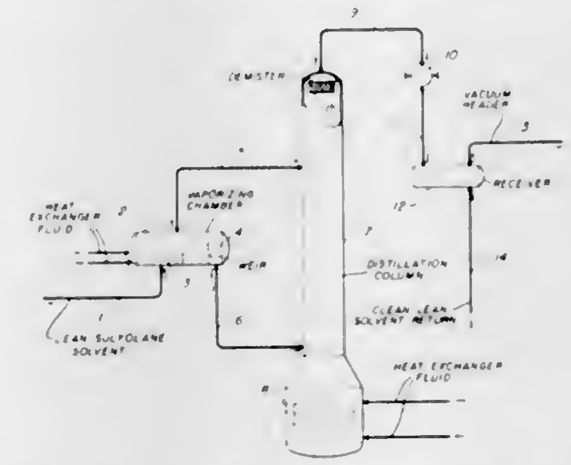

Process for the purification of sulfolane type solvent from an aromatics extraction process by means of a regenerative distillation system. Lean sulfolane solvent is passed to a heated vaporizing chamber wherein preferably at least 80% of the sulfolane type solvent is vaporized. Unvaporized solvent containing relatively non-volatile contaminants passes from the vaporizing chamber to a lower locus near the bottom of a distillation column while clean solvent vapor passes from the chamber to an upper locus near the top of the column.

3,396,091
PROCESS OF FORMING ELECTROCATALYTIC SURFACES
Ernest H. Lyons, Jr., Marblehead, and Russell M. Dempsey, Hamilton, Mass., assignors to General Electric Company, a corporation of New York
No Drawing. Filed Mar. 18, 1965, Ser. No. 440,916
20 Claims. (Cl. 204—11)

1. A process of producing a platinum metal electrode comprising,

forming an aqueous plating bath containing a platinum metal in a concentration of from 3 to 20 grams per liter, concentrated hydrochloric acid in a proportion of from 0 to 100 milliliters per liter, a selected base metal in an amount sufficient to form a weight ratio of the platinum metal to the selected base metal of from 1:1 to 10:1, and a dissolved quantity of a salt selectede from the group consisting of lithium, sodium, and alkaline earth metal halides sufficient to completely solubilize the selected base metal,

immersing an anode and a cathode in the plating bath,

maintaining a plating bath temperature of from 30° C. to 100° C. and a cathode current density of from 5 to 50 milliamperes per square centimeter,

removing the cathode from the plating bath,

rinsing the cathode in a solution consisting essentially of water and a salt chosen from the class consisting of lithium, sodium, and alkaline earth metal halides, rinsing the cathode in water, and

selecting etching the selected base metal from the platinum metal deposited on the cathode.

3,396,092
METHOD OF ELECTROPLATING
Robert C. Moyer, Garfield Heights, and Charles D. Stricker, Shaker Heights, Ohio, assignors to United States Steel Corporation, a corporation of Delaware
No Drawing. Filed June 7, 1965, Ser. No. 462,079
7 Claims. (Cl. 204—29)

1. A method of electroplating a partially-coated metal workpiece in an acid electrolyte containing a salt of the metal to be plated onto the work, comprising the steps of applying a holding voltage potential to the partially-coated workpiece prior to electroplating which is above the decomposition potential of said electrolyte, contacting said workpiece with said electrolyte to electroplate same and increasing the voltage applied thereto above said holding voltage to increase the electroplating rate, maintaining said increased voltage for a period of time corresponding to the desired amount of plating to be accomplished, reducing the voltage applied to the amount of said holding voltage and maintaining said holding voltage on said workpiece until withdrawing same from said electrolyte.

3,396,093
ELECTROCHEMICAL SYNTHESIS OF KETONES
William J. Koehl, Jr., Yardley, Pa., assignor to Mobil Oil Corporation, a corporation of New York
No Drawing. Filed July 2, 1965, Ser. No. 469,322
8 Claims. (Cl. 204—59)

1. Method of converting an acetylene compound of the formula, RC≡CR′, where R and R′ may be hydrogen, alkyl, aryl, aralkyl, alkoxy, aryloxy, and aralkoxy to a ketone product selected from 1,2-diketones of the formula, RCOCOR′, and 1,2-hydroxyketones of the formula, RCHOHCOR′, where R and R′ are the same as before, which comprises electrolyzing a mixture comprising said acetylene compound, an alkanoic acid, an alkali metal salt of an alkanoic acid, and a compound selected from an alkanoic acid anhydride and water, carrying out said electrolysis at a temperature below the boiling point of said mixture, forming an acylated diketone precursor in the presence of said anhydride and forming said hydroxyketone in the presence of water, and hydrolyzing said precursor to form said diketone.

3,396,094
ELECTROLYTIC METHOD AND APPARATUS FOR PRODUCTION OF MAGNESIUM
Olivo G. Sivilotti, Kingston, Ontario, and Augustin Briand, Kenogami, Quebec, Canada, assignors to Aluminum Company of Canada, Montreal, Quebec, Canada, a corporation of Canada
Filed Oct. 25, 1962, Ser. No. 233,011
23 Claims. (Cl. 204—70)

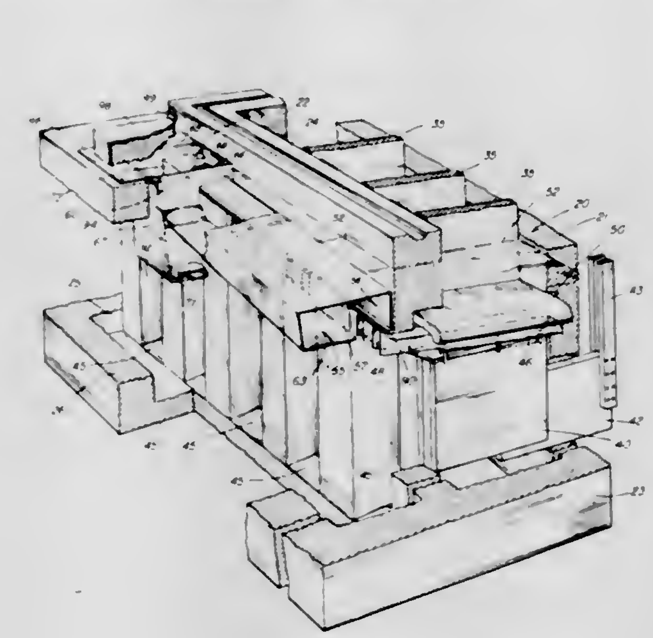

1. In a process for production of magnesium by electrolysis of magnesium chloride in a fused bath, wherein the bath is maintained, in molten form, in a main cell chamber and an adjacent supplemental chamber separated from the main chamber by a partition wall, said electrolysis effecting deposit of molten magnesium on metal

cathodes submerged, along with anodes, in the main chamber, and wherein molten magnesium is received above the cathodes within the main chamber and guided through the partition wall beneath the surface of the fused bath into the supplemental chamber for collection there, the improvement which comprises the steps of maintaining the fused bath at a temperature above the melting point of magnesium and below 700° C., and keeping the collected magnesium molten in the supplemental chamber by receiving and collecting the molten magnesium, which is directed through the partition wall, in an upwardly enclosed region that extends along said supplemental chamber within the latter and that is maintained submerged beneath the surface of the fused bath, and withdrawing molten magnesium as product, from a locality of said enclosed region.

3,396,095
METHOD AND APPARATUS FOR THE CONTINUOUS REGULATION OF THE DISTANCE BETWEEN THE ELECTRODES OF ELECTROLYTIC CELLS WITH LIQUID MECURY CATHODES
Jacques Van Diest, Uccle-Brussels, and Jean Menier, Ixelles-Brussels, Belgium, assignors to Solvay & Cie, Brussels, Belgium
Filed Dec. 17, 1964, Ser. No. 418,990
Claims priority, application Belgium, Jan. 24, 1964, 642,974
9 Claims. (Cl. 204—225)

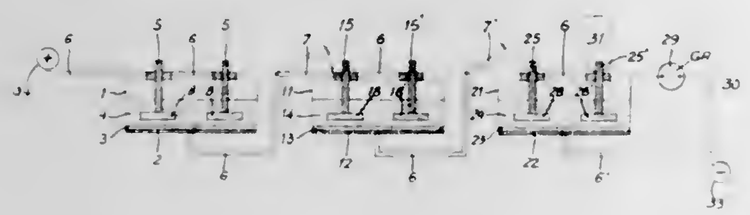

1. A method for the continuous regulation of the distance between the anode and mercury cathode of electrolytic mercury cells used in the electrolysis of brine, each of said mercury cells having switching means and circuit means connecting the cathode of each mercury cell with the anode of the next mercury cell, the steps comprising:
(a) disconnecting said switching means to discontinue the electrolysis;
(b) connecting measuring instrument means in series with the anode to be regulated and the mercury cathode with which said anode cooperates to produce an electrolysis;
(c) advancing said anode to be regulated toward said mercury cathode;
(d) halting the advance of said anode when said measuring instrument means adapted to indicate voltage and current indicates a sudden decrease; and
(e) retracting said anode from a point in space at which it was halted a predetermined distance said distance being chosen for producing optimum conditions for maximum electrolysis production.

3,396,096
MAGNETIC HOLDER FOR ELECTROPHORESIS MATERIAL
James M. Belote, Donald Churchill, Herbert J. Earle, and Charles Gelman, Ann Arbor, Mich., assignors to Gelman Instrument Company, Ann Arbor, Mich., a corporation of Michigan
Filed Mar. 15, 1965, Ser. No. 439,654
7 Claims. (Cl. 204—299)

1. In an electrophoresis chamber having spaced support ridges for bridging specimen strips, a plurality of magnetic elements positioned on opposite sides of a wall of a supporting ridge, one of said elements being removable to selectively engage a specimen strip and hold

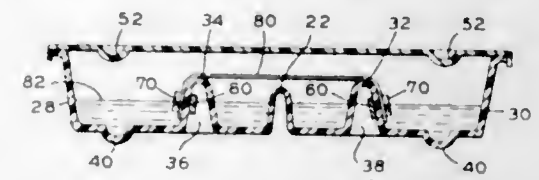

it against a supporting wall by the force of the electromagnetic attraction of said elements.

3,396,097
IONIC SEPARATOR
Edson R. Wolcott, 917 Crenshaw Blvd., Los Angeles, Calif. 90019; Sallie D. Wolcott, executrix of said Edson R. Wolcott, deceased
Filed June 19, 1964, Ser. No. 376,379
3 Claims. (Cl. 204—300)

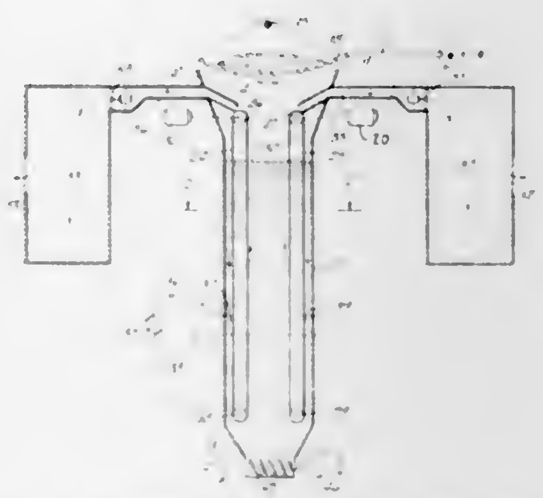

A device is provided which is useful for the recovery of values from finely divided ore, the device comprising a vertical tank provided with a pair of spaced-apart, vertical, continuous, metallic belts adapted to move upwardly in parallel paths within the tank. A high D.C. voltage is applied between the belts which are immersed for the most part in water which is maintained at a high level within the tank. As the finely divided ore particles are added to the tank and fall downwardly therein, between the upwardly moving belts, constituents of the ore particles are ionized and attracted to the belts and are carried to the top of the tank where they are removed.

3,396,098
ELECTRICAL DISCHARGE APPARATUS FOR OBTAINING HYDRAZINE FROM AMMONIA
Jean P. Manion, Milwaukee, Allen J. Hipp, Wauwatosa, and Daniel J. Davies, Milwaukee, Wis., assignors to Allis-Chalmers Manufacturing Company, Milwaukee, Wis.
Filed Dec. 21, 1965, Ser. No. 515,337
7 Claims. (Cl. 204—312)

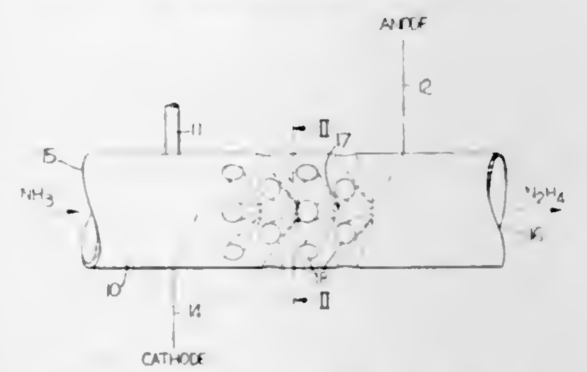

1. An apparatus for producing hydrazine from gaseous ammonia in electrical glow discharges comprising an inert, nonconducting cylindrical tube, gas inlet means leading to said tube, product outlet means leading from said tube, means for subjecting tube to reduced pressure, a pair of electrode members disposed within said tube between said gas inlet means and product outlet means, said electrodes spaced one from another along the line of flow of the gas, means for maintaining an electrical potential between said electrode members, means for passing gaseous ammonia between said electrode members in a direction substantially parallel to the longitudinal axis of the tube, a plurality of inert, nonconducting projections extending from the walls of the tube disposed spirally between the electrode members and angularly to the line of flow of the gaseous ammonia and means for recovering the products of the electrical glow discharge.

3,396,099
METHOD AND APPARATUS FOR TREATING SOLID FUELS AND PETROLEUM OILS
Carl Glinka, Stollwerckstrasse 2, Krefeld-Urdingen, Germany
Filed July 27, 1964, Ser. No. 385,115
Claims priority, application Germany, July 30, 1963, G 38,355
8 Claims. (Cl. 208—107)

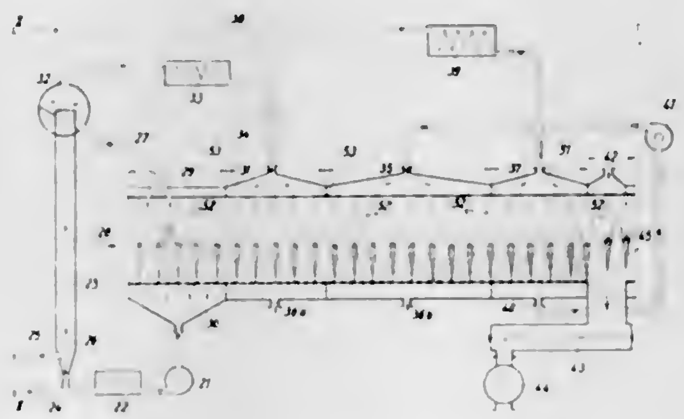

1. In a method of treating a water-containing particulate solid carbonaceous fuel and a petroleum oil having a relatively low content of components boiling below 250° C. at normal pressure, the steps of introducing a mixture of said petroleum oil and of said carbonaceous fuel at an elevated temperature into a reaction chamber filled but partly with said petroleum oil and being maintained at an elevated pressure and at a temperature above the boiling point of water at said elevated pressure so that said carbonaceous fuel initially floats on said oil in said reaction chamber while water is evaporated therefrom and upon partial evaporation of water said carbonaceous fuel sinks downwardly in said petroleum oil into the lower portion of said reaction chamber; moving said carbonaceous fuel from said reaction chamber along a substantially horizontal path through a layer of said hot oil communicating with the oil in said reaction chamber thereby withdrawing additional steam from said carbonaceous fuel; separating said carbonaceous fuel from said layer of oil; and heating the thus substantially water-free carbonaceous fuel to a temperature sufficiently high to crack the oil contained in and adhering to said carbonaceous fuel.

3,396,100
PROCESS FOR SEPARATING OIL-WATER MIXTURES
Robert L. Pettefer, Long Beach, Calif., assignor to Petrolite Corporation, St. Louis, Mo., a corporation of Delaware
Filed Sept. 24, 1965, Ser. No. 489,911
15 Claims. (Cl. 208—188)

Oily water bleeds from desalting equipment or other water-oil separators are clarified and a sludge layer between oil and water bodies in the separating vessel is kept from progressively building up by introducing a light

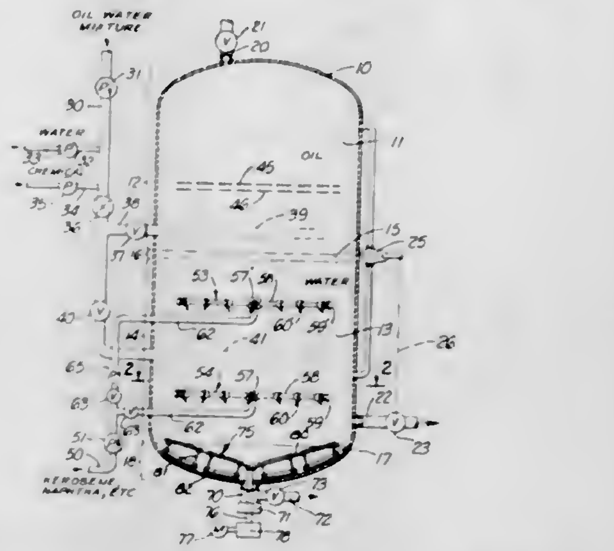

hydrocarbon, such as kerosene or naphtha, in subdivided form into the water body below the sludge layer or more directly into the sludge layer.

3,396,101
SOLVENT EXTRACTION OF HIGHLY AROMATIC CHARGE STOCKS
Donald B. Broughton, Evanston, Ill., assignor to Universal Oil Products Company, Des Plaines, Ill., a corporation of Delaware
Filed Aug. 31, 1966, Ser. No. 576,343
20 Claims. (Cl. 208—313)

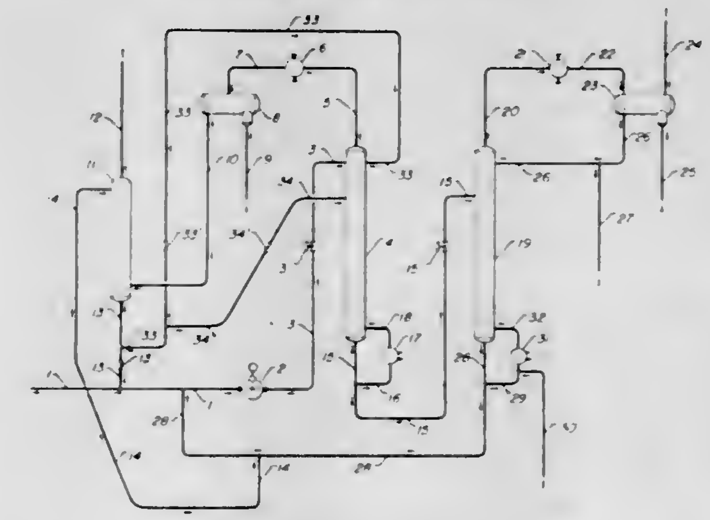

Process for recovering aromatic hydrocarbons from a charge stock containing at least 75 wt. percent aromatics which comprises passing the charge stock in admixture with lean solvent to an extractive stripper column as a single liquid feed. A non-aromatic overhead fraction containing some aromatics is withdrawn therefrom and passed to an extraction zone for aromatic recovery. A resulting rich solvent is passed from the extraction zone to the extractive stripper column as a second feed stream thereto. In a particular embodiment, the single feed stream comprising lean solvent and hydrocarbon charge stock enters the top of the extractive stripping column while the rich solvent enters at a locus below. In a preferred embodiment, the rich solvent, the lean solvent, and the hydrocarbon charge stock are passed in admixture as a single feed to the extractive stripper. A bottoms fraction is withdrawn from the extractive stripper and separated to provide a high purity aromatic product and a lean solvent which is recycled to the extractive stripper column and to the extraction zone.

ERRATUM

For Class 201—1 see:
Patent No. 3,395,799

3,396,102
SEWAGE TREATMENT PROCESS AND APPARATUS
Tom H. Forrest, Evanston, Ill., assignor to FMC Corporation, a corporation of Delaware
Continuation-in-part of application Ser. No. 468,705, July 1, 1965. This application July 10, 1967, Ser. No. 652,199
20 Claims. (Cl. 210—7)

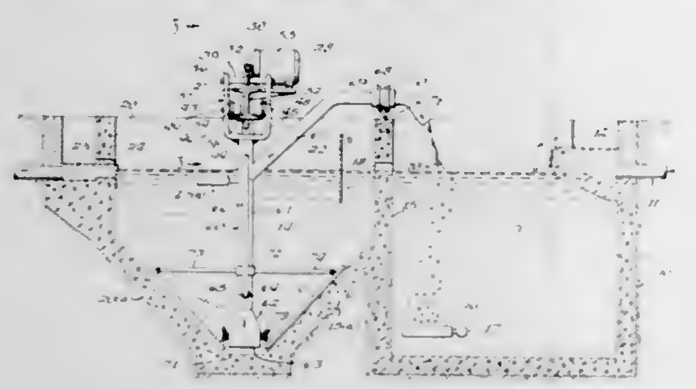

This application deals with a method of treating sewage wherein the aeration step is a so-called complete mixing operation and the mixed liquor discharged from the aeration zone is introduced into a settling zone with uniform distribution with respect to the solid accumulation area of the bottom of the settling tank so that sludge solids will concentrate in strata of relatively uniform solids content when given identical residence time in the settling zone. Accumulated sludge solids are removed from the settling zone by a traveling unit which traverses the accumulation area of the settling zone on a uniform time cycle basis and discharges at least a portion of the sludge solids without mingling the same with sludge from other areas of the accumulation area of the settling zone directly into the aeration tank for mixing with sewage material therein and a clarified effluent is discharged from the upper portion of said settling zone.

3,396,103
METHOD AND APPARATUS FOR MOUNTING MEMBRANE FILTERS ON TUBULAR SUPPORTS WITHOUT LATERALLY STRESSING THE ACTIVE SURFACE
Morgan G. Huntington, Galesville, Md., assignor to Waterdrink, Inc., Salt Lake City, Utah, a corporation of Nevada
Filed Apr. 1, 1965, Ser. No. 444,751
6 Claims. (Cl. 210—23)

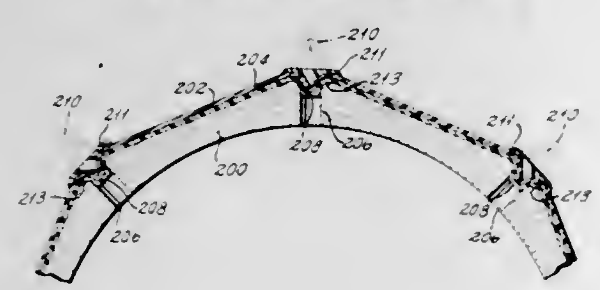

An apparatus and method for extracting solvents from pressurized solutions and suspensions by flow through a semipermeable membrane. A membrane is supported on a surface of a tubular support, which surface is composed of planar surface segments and has fluid flow passageways spaced along the vertices of the angles formed by said planar segments. The membrane and support are rotated about the longitudinal axis of the support while a pressurized solution is maintained in contact with the membrane. Solvent diminished in solute content passes through the membrane by reverse osmosis and is withdrawn from the interior of the tubular support.

3,396,104
PROCESS OF TREATING SALINE WATER
John J. Miller, West Chicago, Ill., assignor to Ocean Minerals, Inc., Chicago, Ill., a corporation of Illinois
No Drawing. Filed May 17, 1965, Ser. No. 456,565
15 Claims. (Cl. 210—54)

1. In a process of treating saline water to reduce its content of scale-forming salts, the steps which comprise:
mixing with the saline water plant protein, proteinaceous and protein-type material,
adding a sufficient amount of ammonia to the resulting mixture to bring the pH to at least 10,
adding a sufficient amount of an acid compound with agitation to reduce the pH of the liquid phase of the mixture to within the range of from 7 to 8 and to effect precipitation, and
separating the precipitate from the liquid phase of the mixture.

3,396,105
DRILLING FLUID TREATMENT
Ralph F. Burdyn and Ludwig D. Wiener, Dallas, Tex., assignors to Mobil Oil Corporation, a corporation of New York
No Drawing. Continuation-in-part of application Ser. No. 608,672, Sept. 10, 1956. This application Aug. 19, 1963, Ser. No. 303,145
2 Claims. (Cl. 252—8.5)

1. A drilling fluid having a solid phase and a liquid phase, said solid phase comprising a clay capable of being hydrated and dispersed by water with consequent increase in the yield point of said drilling fluid and said liquid phase having a continuous water phase capable of hydrating and dispersing said clay with consequent increase in the yield point of said drilling fluid, and containing a first water soluble, non-ionic compound having surface active properties and characterized by the formula

$$R—(X—[(CH_2—CH_2—O)_n—H]_m)_y$$

wherein R is a hydrophobic group containing at least four but less than twelve carbon atoms, X is a structural element selected from the group consisting of —O—, —S—,

$$\overset{O}{\overset{\|}{C}}—O—,\ —\overset{S}{\overset{\|}{C}}—S—,\ —\overset{O}{\overset{\|}{C}}—S—,\ —\overset{S}{\overset{\|}{C}}—O—,\ —\overset{O}{\overset{\|}{C}}—N=$$

and

$$—\overset{O}{\overset{\|}{C}}—NH—$$

$(CH_2—CH_2—O)$ is ethylene oxide, n is a whole number, H is hydrogen, m is a whole number one less than the valence of the structural element X, y is a whole number, and the product of n, m and y is at least as great as ten, said first water soluble, non-ionic compound being in an amount sufficient to decrease the yield point of said drilling fluid, a predominantly hydrophobic, non-ionic defoamant compound having surface-active properties and characterized by the formula

$$R'—(X—[(CH_2—CH_2—O)_k—H]_m)_y$$

wherein R′ is a hydrophobic group containing at least twelve carbon atoms, X is a structural element selected from the group consisting of —O—, —S—,

$$—\overset{O}{\overset{\|}{C}}—O—,\ —\overset{S}{\overset{\|}{C}}—S—,\ —\overset{O}{\overset{\|}{C}}—S—,\ —\overset{S}{\overset{\|}{C}}—O—,\ —\overset{O}{\overset{\|}{C}}—N=$$

and

$$—\overset{O}{\overset{\|}{C}}—NH—$$

$(CH_2—CH_2—O)$ is ethylene oxide, n is a whole number, H is hydrogen, m is a whole number one less than the valence of the structural element X, y is a whole number, and the product of k, m and y is not greater than three,

said hydrophobic, non-ionic defoamant compound being in an amount of about one-thirtieth to one-fifth by weight of said first water soluble, non-ionic compound having surface active properties, a defoamant comprising an oil in an amount of about 1 to 15 percent by volume of said drilling fluid, and a second water soluble, non-ionic compound having surface-active properties characterized by the formula $R—(X—[(CH_2—CH_2—O)_n—H]_m)_y$, wherein R is hydrophobic group containing at least twelve carbon atoms, X is a structural element selected from the group consisting of —O—, —S—,

$$\overset{O}{\overset{\|}{C}}—O—,\ —\overset{S}{\overset{\|}{C}}—S—,\ —\overset{O}{\overset{\|}{C}}—S—,\ —\overset{S}{\overset{\|}{C}}—O—,\ —\overset{O}{\overset{\|}{C}}—N=$$

and

$$—\overset{O}{\overset{\|}{C}}—NH—$$

$(CH_2—CH_2—O)$ is ethylene oxide, n is a whole number, H is hydrogen, m is a whole number one less than the valence of the structural element X, y is a whole number, and the product of n, m, and y is at least as great as ten, said second water soluble, non-ionic compound being in an amount sufficient to effect emulsification of said oil.

3,396,106
LUBRICANTS AND LIQUID HYDROCARBON FUELS CONTAINING SYNERGISTIC MIXTURES OF SUBSTITUTED TETRAHYDROPYRIMIDINES AND AMINE SALTS OF SUCCINAMIC ACIDS
Harry J. Andress, Jr., and Julius Capowski, Pitman, N.J., assignors to Mobil Oil Corporation, a corporation of New York
No Drawing. Filed Jan. 10, 1966, Ser. No. 519,410
13 Claims. (Cl. 252—33.6)

Lubricants and liquid hydrocarbon fuels are provided containing a synergistic mixture of—

(1) A di-substituted tetrahydropyrimidine having the formula:

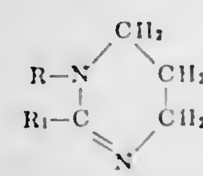

wherein R and R_1 are aliphatic hydrocarbon radicals having from about 8 to about 22 carbon atoms, and from about 1 to about 22 carbon atoms, respectively, and

(2) An amine salt of (a) a succinamic acid having the formula:

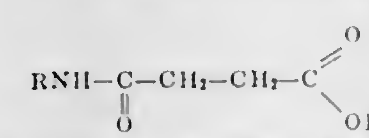

wherein R is a monovalent aliphatic hydrocarbon radical containing from about 4 to about 30 carbon atoms and having a tertiary carbon atom directly attached to the nitrogen atom, with (b) a primary monoalkyl amine, wherein the alkyl group contains from about 4 to about 30 carbon atoms and having a tertiary carbon atom directly attached to the nitrogen atom.

3,396,107
COMPOSITION FOR FRACTURING PROCESS
William Armistead Hill, Borger, Tex., assignor to Producers Chemical Company, Borger, Tex., a corporation of Texas
Original application Aug. 9, 1962, Ser. No. 215,829, now Patent No. 3,195,634. Divided and this application Mar. 13, 1964, Ser. No. 351,614
3 Claims. (Cl. 252—8.55)

1. A stable fracturing composition for treating an underground formation containing a deposit chosen from the group consisting of oil and gas which composition consists of a liquid-liquid mixture of liquid carbon dioxide and water wherein the amount of liquid carbon dioxide admixed with the water provides a CO_2 gas to water ratio, measured at 14.7 p.s.i.a. and 80° F., of from 300 to 1500 cubic feet of gas per 42 gallon barrel of water, said composition being below the critical temperature and above the critical pressure of carbon dioxide, and uniform.

3,396,108
EXTREME PRESSURE SOAP AND COMPLEX THICKENED GREASES
Gerard P. Caruso, New Orleans, La., assignor to Shell Oil Company, New York, N.Y., a corporation of Delaware
No Drawing. Filed Dec. 22, 1964, Ser. No. 420,425
7 Claims. (Cl. 252—18)

1. A soap base grease composition having improved extreme pressure properties consisting essentially of (1) a lubricating base oil thickened to grease consistency with (2) a thickening amount of metal-containing soap, and (3) a mixture containing 0.5–10.0% by weight, basis total composition, each of (a) an oil-soluble sulfonate corresponding to the formula

$$(RSO_3)_n^-(A)^{+n}$$

wherein A is selected from the group consisting of alkali metal, alkaline earth metal, ammonium and omega-amino-C_{2-6}-alkylammonium, n equals the valence of A and R is a monovalent hydrocarbyl radical selected from the group consisting of alkyl, aryl, alkaryl and aralkyl containing at least 6 carbon atoms, and (b) a metal sulfide selected from the group consisting of an amorphous antimony sulfide and molybdenum disulfide; the composition being further characterized as containing no naphthenate compounds.

3,396,109
LUBRICANTS CONTAINING REACTION PRODUCT OF A METAL PHOSPHINODITHIOATE WITH AN AMINE
Thomas A. Butler and Herbert F. Wiese, Cleveland, Ohio, assignors to The Lubrizol Corporation, Wickliffe, Ohio, a corporation of Ohio
No Drawing. Original application May 14, 1963, Ser. No. 280,452, now Patent No. 3,351,647, dated Nov. 7, 1967. Divided and this application Jan. 26, 1967, Ser. No. 640,761
10 Claims. (Cl. 252—32.7)

Phosphorus- and nitrogen-containing compositions are prepared by reacting a metal salt of a phosphinodithioic acid, especially a zinc salt of a diarylphosphonidithioic acid, with an amine, especially an aliphatic amine having from one to about forty carbon atoms. The compositions are useful as additives for lubricating oils and automatic transmission fluids, in which they act as oxidation inhibitors and anti-wear agents. They afford synergistic oxidation inhibition properties when used with phenyl beta-naphthyl amines.

3,396,110
LUBRICANT COMPRISING SULFUR-CONTAINING POLYMER
Harold Wayne Hill, Jr., and James T. Edmonds, Jr., Bartlesville, Okla., assignors to Phillips Petroleum Company, a corporation of Delaware
No Drawing. Filed Nov. 30, 1964, Ser. No. 414,854
13 Claims. (Cl. 252—42.1)

1. A grease composition having incorporated therein a high molecular weight polyphenylene sulfide prepared by reacting sodium sulfide, from which substantially all water of hydration has been removed, dissolved in a polar organic solvent with p-dichlorobenzene at an elevated temperature until a finely divided solid polymer is ob-

tained said composition not containing any metal dithiocarbamate.

2. A grease composition according to claim 1, said composition also containing a small amount of a high density polyethylene, a small amount of lithium 12-hydroxystearate, and a conventionally refined neutral oil used in the preparation of a grease, said composition not containing any metal dithiocarbamate.

3,396,111
LUBRICANTS COMPRISING CERTAIN DIESTERS OF MALEIC, FUMARIC OR ITACONIC ACIDS AND METHOD OF LUBRICATING
Robert K. Smith, Springfield Township, Delaware County, and Sidney J. Barber, Philadelphia, Pa., assignors to E. F. Houghton & Co., Philadelphia, Pa., a corporation of Pennsylvania
No Drawing. Continuation-in-part of application Ser. No. 323,909, Nov. 15, 1963. This application May 6, 1965, Ser. No. 453,807
29 Claims. (Cl. 252—56)

21. A lubricating composition consisting essentially of a lubricating oil and as an additive, from about 5 to about 50% by weight of the total composition a compound of the formula

$$R'-O-\overset{\overset{\displaystyle O}{\|}}{C}-X-\overset{\overset{\displaystyle O}{\|}}{C}-O-R$$

wherein X is a divalent radical selected from the group consisting of —CH=CH— and

$$-CH_2-\underset{\underset{\displaystyle CH_2}{\|}}{C}-$$

R is a constituent selected from the group consisting of alkyl, methyl alkyl and ethyl alkyl where the alkyl chain contains from 6 to 20 carbon atoms, and R′ is a constituent selected from the group consisting of alkyl, methyl alkyl and ethyl alkyl where the alkyl chain contains from 12 to 20 carbon atoms.

3,396,112
PROCESS OF PREPARING INORGANIC FOAMS FROM ALKALI METAL SILICATES AND ALUMINUM
Raymond C. Burrows, Minneapolis, Minn., assignor to Ashland Oil & Refining Company, Ashland, Ky., a corporation of Kentucky
No Drawing. Filed June 11, 1965, Ser. No. 463,358
6 Claims. (Cl. 252—62)

A particulate mixture of dry, water-soluble silicate and aluminum in which the weight ratio of the silicate to the aluminum is from 15:1 to 1:9 is reacted with 30 to 75 weight percent, based on the total mixture, of water to prepare an inorganic foam which comprises a matrix having the formula $Me_2O \cdot nSiO_2 \cdot Al_2O_3$ wherein Me is an alkali metal and n is from 0.5 to 4, said matrix constituting at least 50 weight percent of the composition of the foam, the remainder comprising unreacted aluminum, unreacted alk.li metal silicates and added inert inorganic fillers.

3,396,113
ANTI-FREEZING ADDITIVES
Ch.rles H. Jacoby, Grosse Ile, and Frank V. Whelply, Dearborn, Mich., assignors to International Salt Company, Clarks Summit, Pa.
No Drawing. Continuation-in-part of application Ser. No. 345,859, Feb. 19, 1964. This application June 28, 1965, Ser. No. 467,739
6 Claims. (Cl. 252—70)

1. An additive for inhibiting freezing and caking of particulate sodium chloride, consisting of:

one part by weight of an amphoteric synthetic surface active agent,

and a water soluble complex iron cyanide selected from the group consisting of alkali metal ferrocyanide salts and alkaline earth metal ferrocyanide salts and providing ferrocyanide ion in an amount of about .5 to about 9 parts by weight.

3,396,114
COMBINATION HYDRAULIC AND TRANSMISSION FLUIDS
Paul C. Vienna, Calumet City, Ill., and John J. Plemich, Whiting, and James W. Gaynor, Valparaiso, Ind., assignors to Standard Oil Company, Chicago, Ill., a corporation of Indiana
No Drawing. Continuation-in-part of application Ser. No. 334,543, Dec. 30, 1963. This application Nov. 3, 1966, Ser. No. 591,722
2 Claims. (Cl. 252—75)

A dual purpose lubricant for use as the sole lubricant in hydraulic and gear transmission systems, consisting essentially of (a) about 3–5 vol. percent of tricresyl phosphate; (b) about 7–12 vol. percent of an oil-soluble neutral calcium sulfonate; (c) about 0.5–2 vol. percent of a poly (C_{4-20} alkyl) methacrylate viscosity index improver having a molecular weight of about 10,000–30,000; (d) about 0.5–2 vol. percent of a hindered phenol having at least one alkyl substituent ortho to a phenolic hydroxyl group; (e) about 0.5–2 vol. percent of a paraffin wax alkylated naphthalene lubricating oil pour point depressor; (f) about 0.1–0.5 vol. percent of a C_{1-4} alkyl ester of a chlorinated C_{12-18} fatty acid; (g) about 5–20 parts per million of a silicone polymer antifoam agent; and (h) the remainder a petroleum lubricating oil having an aniline point of about 195–210° F.; said fluid having a minimum viscosity of about 47 SSU at 210° F. and a maximum viscosity (extrapolated) at 0° F. of about 12,000 SSU, and an aniline point of about 195–210° F.

3,396,115
DRY CLEANING PROCESS
William R. Moore, Lake Jackson, Tex., assignor to The Dow Chemical Company, Midland, Mich., a corporation of Delaware
No Drawing. Filed Aug. 12, 1965, Ser. No. 479,291
3 Claims. (Cl. 252—171)

Dry cleaning solvents are provided with detergent properties and other beneficial characteristics when there is dissolved in them a small but effective amount of a polysulfone resin resulting from the copolymerization of sulfur dioxide and an alpha monoolefin of 6–30 carbon atoms.

3,396,116
ENCAPSULATION TECHNIQUE
Leon M. Adams and Clarke E. Schuetze, San Antonio, Tex., assignors, by mesne assignments, to AMP Incorporated, Harrisburg, Pa., a corporation of New York
No Drawing. Filed Sept. 7, 1965, Ser. No. 485,558
8 Claims. (Cl. 252—182)

A water-insoluble alginate salt capsule filled with an aliphatic amine curing agent for epoxy resins, said amine being admixed with a mono- or di-alkyl monophenol and a polyhydric phenol.

3,396,117
ENCAPSULATION TECHNIQUE
Clarke E. Schuetze, San Antonio, Tex., assignor, by mesne assignments, to AMP Incorporated, Harrisburg, Pa., a corporation of New Jersey
No Drawing. Filed Sept. 7, 1965, Ser. No. 485,557
9 Claims. (Cl. 252—182)

A water-insoluble alginate salt capsule filled with an aliphatic amine curing agent for epoxy resins, said amine being admixed with a mono- or di-alkyl phenol to render it less fugitive.

3,396,118
STRONTIUM MAGNESIUM ORTHOPHOSPHATE PHOSPHORS
Ranajit K. Datta, East Cleveland, Ohio, assignor to General Electric Company, a corporation of New York
Filed Feb. 18, 1965, Ser. No. 433,628
3 Claims. (Cl. 252—301.4)

1. A tin-activated strontium magnesium orthophosphate phosphor comprising strontium magnesium orthophosphate produced by firing at temperatures between 1100 to 1180° C. a mixture wherein the base/acid ratio, being the ratio of total cations consisting of Sr, Mg and Sn to anions consisting of PO_4 is between the limits of 2.97/2 to 2.70/2, the firing temperature being in excess of 1100° C. and closer to 1180° C. according to the departure of the base/acid ratio from 2.97/2 towards 2.70/2, at the same time as the proportion of magnesium is between the limits of 0.37 to 0.20 mole per 2 moles of PO_4, and the proportion of Sn is between the limits of 0.02 to 0.03 mole per 2 moles of PO_4, and such that the resulting fired produce is a homogeneous crystal phase without contamination by separate pyrophosphate or glassy phases.

3,396,119
GREEN LUMINESCING PHOSPHOR FOR COLOR TELEVISION AND METHOD OF MAKING SAME
Theodore H. Maiman, Pacific Palisades, Raymond H. Hoskins, San Pedro, Bernard H. Soffer, Northbridge, Ricardo C. Pastor, Manhattan Beach, and Maria A. Pearson, Inglewood, Calif., assignors to Union Carbide Corporation
Filed Mar. 22, 1965, Ser. No. 441,608
3 Claims. (Cl. 252—301.4)

A green luminescing phosphor composition is set forth together with a method of forming the same for use in color television. The composition consists essentially of magnesium spinel doped with divalent manganese ions and including an additive of vanadium for quenching the long-lived luminescent component of the phosphor so that it will be suitable for color television use. The method includes the step of dropping a powdered mixture after calcinating the same through an inverted burner operated with a reducing composition to form the magnesium spinel with the divalent manganese received in the spinel lattice.

3,396,120
THERMOLUMINESCENT GLASS AND METHOD OF PREPARING THE SAME
Robert J. Ginther, Temple Hills, Md., assignor to the United States of America as represented by the Secretary of the Navy
No Drawing. Filed Apr. 30, 1965, Ser. No. 452,405
5 Claims. (Cl. 252—301.4)

A clear, transparent, colorless glass of lithium oxide alumina and silica sensitized with terbium oxide to yield an efficient thermoluminescence after exposure to high energy radiation. In the preparation of the glass, the melting of the ingredients and cooling of the glass melt are conducted in a reducing atmosphere.

3,396,121
COMPOSITIONS CONTAINING CITRIC ACID ESTERS AND THEIR PREPARATION
Johannes Miksch, Mannheim-Pfingstberg, and Lieselotte Bauer, Frankeneck, Pfalz, Germany, assignors to Joh. A. Benckiser GmbH Chemische Fabrik, Ludwigshafen (Rhine), Germany, a corporation of Germany
No Drawing. Continuation-in-part of application Ser. No. 152,040, Nov. 13, 1961. This application Mar. 4, 1964, Ser. No. 349,472
Claims priority, application Germany, Nov. 16, 1960, B 60,102, B 60,103; Mar. 7, 1961, B 61,558, B 61,559
14 Claims. (Cl. 252—312)

1. A stable aqueous emulsion consisting essentially of an emulsifiable citric acid ester selected from the group consisting of a trialkyl citrate and its acetylation product, said ester being emulsified in an aqueous medium and of an ester compound of citric acid selected from the group consisting of the mono-esters of citric acid with branched-chain alcohols with at least 9 carbon atoms, the di-esters of citric acid with branched-chain alcohols with at least 9 carbon atoms, their reaction products with inorganic salt-forming compounds selected from the group consisting of hydrazine, hydroxylamine, ammonia, and alkali metal hydroxides, and their rection products with organic salt-forming compounds selected from the group consisting of mono-, di-, and tri-ethanolamines, di-, and tri-(lower) alkylamines, methyl glucamine, and glucosamine, said ester compound acting as emulsifying and stabilizing agent in said emulsion.

10. A stable aqueous emulsion of an oil consisting essentially of an oil selected from the group consisting of a vegetable oil, an animal oil, and a mineral oil and of an ester compound of citric acid selected from the group consisting of the mono-esters of citric acid with branched-chain alcohols with at least 9 carbon atoms, the di-esters of citric acid with branched-chain alcohols with at least 9 carbon atoms, their reaction products with inorganic salt-forming compounds selected from the group consisting of hydrazine, hydroxylamine, ammonia, and akali metal hydroxides, and their reaction products with organic salt-forming compounds selected from the group consisting of mono-, di-, and tri-ethanolamines, di- and tri-(lower) alkylamines, methyl glucamine, and glucosamine, said ester compound acting an emulsifying and stabilizing agent in said emulsion.

3,396,122
SULFUR DIOXIDE ABSORBENT
Lothar W. Brauer, Berlin, Germany, assignor to Auergesellschaft G.m.b.H., Berlin, Germany, a corporation of Germany
No Drawing. Filed Nov. 17, 1964, Ser. No. 411,701
3 Claims. (Cl. 252—428)

Sulfur dioxide absorbents in which a granular carrier such as activated carbon is impregnated with an alkaline material are improved by impregnating the absorbent with a humectant, such as glycol and polyvinyl alcohol.

3,396,123
METHOD OF PREPARING A CATALYST COMPOSITE
Peter Urban, Northbrook, Ill., assignor to Universal Oil Products Company, Des Plaines, Ill., a corporation of Delaware
No Drawing. Filed Dec. 22, 1965, Ser. No. 515,743
5 Claims. (Cl. 252—428)

A catalyst composite containing a thermoplastic and an inorganic carrier material is prepared by admixing a powdered plastic, such as polyethylene, polypropylene, polystyrene, etc. with finely divided particles of carbon, silica, clays, silicates and the like, heating the mixture to the softening point of the thermoplastic to form a plastic cake after cooling. The cake is broken into granules and impregnated with a catalytic material.

3,396,124
CATALYST FOR LOW TEMPERATURE CONVERSION OF HYDROCARBONS TO HYDROGEN AND METHANE
William F. Taylor, Scotch Plains, and John H. Sinfelt, Berkeley Heights, N.J., assignors to Esso Research and Engineering Company, a corporation of Delaware
No Drawing. Filed May 7, 1964, Ser. No. 365,803
5 Claims. (Cl. 252—465)

1. A catalyst having improved activity for the reaction of steam with hydrocarbons at low temperatures in the range of 600° F. to 925° F. to produce a gaseous

product containing principally methane and hydrogen prepared by coprecipitating from solutions nickel and alumina and incorporating in the coprecipitate a promoter containing zinc and chromium, said catalyst containing 10 to 60 wt. percent nickel and 10 to 30 wt. percent zinc and chromium, calculated as the metals.

3,396,125
ALKENE OXIDE POLYMERIZATION
Clinton F. Wofford, William R. Busler, and Henry L. Hsieh, Bartlesville, Okla., assignors to Phillips Petroleum Company, a corporation of Delaware
No Drawing. Filed June 7, 1965, Ser. No. 462,113
8 Claims. (Cl. 260—2)

Epoxide compounds are polymerized with a catalyst comprising (a) an organoaluminum compound, (b) a metal salt of a beta-diketone, and (c) water. The rubbery polymers produced are useful in the automobile industry for fabricating articles such as motor mounts, body mounts, suspension system parts, hoses, tubing, and the like.

3,396,126
POLYURETHANES
Jesse Fred Gurley, Jr., Pittsburgh, Pa., Emile F. Harp, New Martinsville, W. Va., and Edward L. Reichard, Pittsburgh, Pa., assignors to Mobay Chemical Company, Pittsburgh, Pa., a corporation of Delaware
Filed May 24, 1966, Ser. No. 552,612
5 Claims. (Cl. 260—2.5)

1. A method for preparing a cellular polyurethane having discrete particles of a solid therein which comprises sprinkling solid particles into a liquid organic compound having hydrogen atoms capable of reacting with an organic polyisocyanate to form a polyurethane while said liquid is being stirred, thereby suspending particles of the solid in the liquid to form a slurry, subjecting the resulting slurry to a shearing action thereby breaking agglomerates of solid therein into discrete particles, flowing the slurry in a thin film whereby entrapped air bubbles escape, diluting the resulting slurry with additional liquid organic compound having hydrogen atoms capable of reacting with an organic polyisocyanate to form a polyurethane, and thereafter mixing the resulting dispersion with an organic polyisocyanate under conditions which result in the formation of a cellular polyurethane.

3,396,127
PHOTOGRAPHIC HARDENERS
Donald M. Burness and Burton D. Wilson, Rochester, N.Y., assignors to Eastman Kodak Company, Rochester, N.Y., a corporation of New Jersey
No Drawing. Filed May 22, 1964, Ser. No. 369,629
12 Claims. (Cl. 260—8)

1. A composition of matter comprising gelatin and a hardener therefor having the formula:

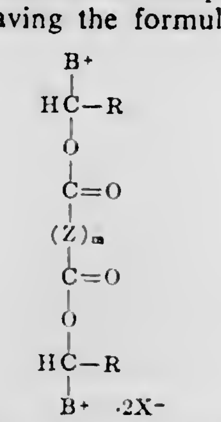

in which X is an acid anion, each R is a substituent selected from the group consisting of hydrogen and the lower alkyl radicals and B+ is a quaternary nitrogen residue selected from the following bases, pyridine, a (low carbon alkyl)pyridine, a benzylpyridine and a (low carbon hydroxyalkyl)pyridine, the compounds with tertiary nitrogen in the bridgehead position and the aliphatic and cyclic tertiary nitrogen bases, Z is a linking structure containing 1–10 carbon atoms selected from the group consisting of the saturated and unsaturated carbon chains and the heterogeneous chains composed predominantly of carbon and m is 0 or 1.

3,396,128
METHOD FOR PROMOTING CRYSTALLIZATION OF UNSATURATED POLYESTER RESINS
Katumi Matumoto, Kyoto, Takao Iwai, Kashiwara, and Yasunari Fujioka, Kobe, Japan, assignors to Takeda Chemical Industries, Ltd., Osaka, Japan
No Drawing. Filed May 1, 1963, Ser. No. 277,137
Claims priority, application Japan, May 4, 1962, 37/18,415
9 Claims. (Cl. 260—22)

1. A method of promoting crystallization, from noncrystalline state, of unsaturated polyester resin which is crystalline at room temperature, which consists essentially in incorporating from about 0.1 to 5.0 percent by weight of metal salt of higher fatty acid into the said unsaturated polyester resin prior to crystallization.

3,396,129
INTUMESCING FIRE-RETARDANT COATING COMPOSITIONS AND METHOD FOR MAKING SAME
David A. Yeadon and Eric T. Rayner, New Orleans, Gerald B. Verburg, Metairie, and Lucien L. Hooper, Jr., Frank G. Dollear, and Harold P. Dupuy, New Orleans, La., assignors to the United States of America as represented by the Secretary of Agriculture
No Drawing. Continuation-in-part of application Ser. No. 253,004, Jan. 21, 1963. This application July 31, 1964, Ser. No. 386,797
39 Claims. (Cl. 260—22)

Processes are provided for the synthesis of (1) water-resistant carbonific polyurethanes, (2) water-resistant, nonhygroscopic spumific, fire-retardant polyaminotriazine phosphates, (3) water-resistant carbonific polycarbonates, and (4) water-resistant, intumescing, fire-retardant poly(urea-urethane-phosphate-phosphonates), and the utilization of these products and/or mixtures thereof in paint formulations to obtain exterior and interior, intumescing, fire-retardant paints.

3,396,130
ORGANIC TRIPHOSPHITES AND SYNTHETIC RESIN COMPOSITIONS CONTAINING THE SAME
William E. Leistner, Brooklyn, and Arthur C. Hecker, Forest Hills, N.Y., assignors to Argus Chemical Corporation, Brooklyn, N.Y., a corporation of New York
No Drawing. Filed Oct. 2, 1962, Ser. No. 227,705
10 Claims. (Cl. 260—23)

1. A polyvinyl chloride resin composition having an improved resistance to deterioration when heated at 350° F., comprising a polyvinyl chloride resin and an organic triphosphite having the formula:

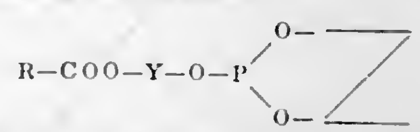

wherein RCOO is an aliphatic organic acid radical having from two to twenty-four carbon atoms, Y is an alkylene radical having from two to twenty carbon atoms, and Z is selected from the group consisting of hydrogen and organic radicals including RCOOY taken in sufficient number to satisfy the valences of the two phosphite oxygen atoms.

8. A polyvinyl chloride resin composition in accordance with claim 1 including a salt of a polyvalent metal and an organic acid having from six to twenty carbon atoms.

3,396,131
CHLORINE-CONTAINING RESINS STABILIZED WITH MIXTURES COMPRISING A PHENYL UREA AND A PHOSPHITE, AND OPTIONALLY A MAGNESIUM COMPOUND
Richard Butler Macmillan, Welwyn, and Iolo Llewellyn Lewis, Welwyn Garden City, England, assignors to Imperial Chemical Industries Limited, London, England, a corporation of Great Britain
No Drawing. Filed Jan. 18, 1965, Ser. No. 426,435
Claims priority, application Great Britain, Jan. 27, 1964, 3,357/64
12 Claims. (Cl. 260—23)

A solid composition comprising (i) a thermoplastic chlorine-containing polymer which degrades at elevated temperature by loss of hydrogen chloride and (ii) both a stabiliser (a) consisting of at least one organic heat stabilizer for such polymers selected from the class consisting of mono- and di-aromatically substituted areas, and mono- and di-aromatically substituted thioureas and a stabiliser (b) consisting of at least one organic phosphite heat stabiliser comprising as sole constituent elements carbon, hydrogen, phosphorus, oxygen and/or sulphur and optionally nitrogen wherein the phosphorus is present in at least one group selected from:

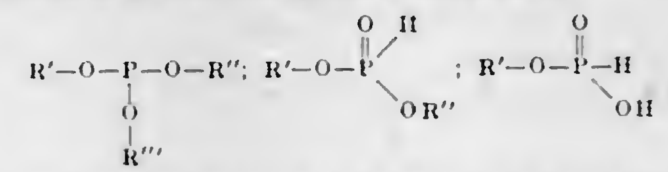

and the thio analogues thereof where R', R'' and R''' are hydrocarbon groups, the groups R', R'' and R''' being the same or different, the total quantity of stabilisers (a) and (b) together being from 0.1 to 5 parts per 100 parts of the polymer by weight, the composition being essentially free from metal-containing heat stabilisers.

3,396,132
POLYVINYL CHLORIDE STABILIZED WITH MIXTURES COMPRISING MAGNESIUM SALT, ZINC SALT AND POLYOL
Norman L. Perry, Wayne, and Mark W. Pollock, Teaneck, N.J., assignors to Argus Chemical Corporation, Brooklyn, N.Y., a corporation of New York
No Drawing. Continuation of application Ser. No. 211,877, July 23, 1962. This application June 2, 1965, Ser. No. 460,855
22 Claims. (Cl. 260—23)

14. A polyvinyl chloride resin composition having improved resistance to heat deterioration comprising a polyvinyl chloride resin and an amount within the range from about 0.25 to about 10% by weight of the resin of a stabilizer composition comprising a mixture of magnesium and zinc salts of acids selected from the group consisting of benzoic acid and fatty acids derived from edible fats and oils, and a nontoxic aliphatic polyhydric alcohol having from two to ten hydroxyl groups, in the proportions from about 25 to about 40 parts by weight of zinc salt, from about 25 to about 40 parts by weight of magnesium salt and from about 20 to about 50 parts by weight of polyhydric alcohol, the said stabilizer composition being present in an amount to improve the resistance of the resin composition to heat deterioration when heated at 375° F.

3,396,133
PLASTIC COMPOSITIONS
Robert Leitch Forman, Runcorn, and Peter Hill, Blackley, Manchester, England, assignors to Imperial Chemical Industries Limited, London, England, a corporation of Great Britain
No Drawing. Filed Nov. 25, 1964, Ser. No. 414,014
Claims priority, application Great Britain, Dec. 4, 1963, 47,940/63
15 Claims. (Cl. 260—28.5)

Polymer compositions comprising a chlorine-containing polymer derived from a polymerizable vinyl compound, e.g., vinyl chloride polymers and chlorinated polyolefins, stabilized with a mixture of iron oxide and basic magnesium compound, notably magnesium oxide.

3,396,134
WAX COMPOSITIONS HAVING SUPERIOR FAST TACK PROPERTY
Eugene R. Cox, Ponca City, Okla., assignor to Continental Oil Company, Ponca City, Okla., a corporation of Delaware
No Drawing. Filed Sept. 13, 1965, Ser. No. 487,051
2 Claims. (Cl. 260—28.5)

Composition of matter, having superior fast tack property, comprising: petroleum wax, ethylene-vinyl acetate copolymer, alpha-methyl styrene-vinyl toluene copolymer, and butyl rubber.

3,396,135
COATING COMPOSITION CONTAINING STYRENE-MALEIC ANHYDRIDE PARTIAL ESTER COPOLYMER AS EMULSIFIER
Charles F. Bishop, Longmeadow, Mass., assignor to Monsanto Company, St. Louis, Mo., a corporation of Delaware
No Drawing. Filed July 2, 1964, Ser. No. 380,025
11 Claims. (Cl. 260—29.6)

1. A coating composition consisting of a homogeneous blend of:

A. 30–70 parts by weight, based on the polymer solids, of an emulsion polymerized styrene homopolymer latex containing as a sole emulsifier 10–40 weight percent thereof of a salt of a partial ester of a styrene maleic anhydride copolymer, said salt:
   (1) having been present during the preparation by emulsion polymerization of said homopolymer latex,
   (2) having a molecular weight of about 1000–20,000 and
   (3) having in its structure recurring groups of the formulae:

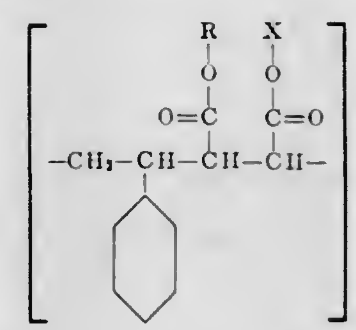

I

and

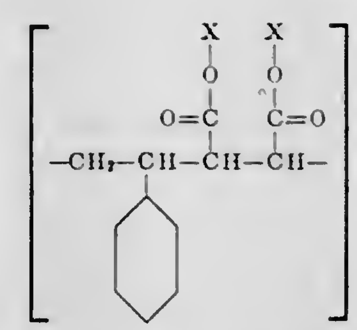

II

wherein
   (a) the groups of Formula I constitute 20–100% of the total of groups of Formulae I and II,
   (b) R is an organic radical of 1–20 carbon atoms selected from the group consisting of alkyl radicals, aryl radicals, aralkyl radicals, cycloalkyl radicals and ether radicals,
   (c) X is selected from the group consisting of ammonium, substituted ammonium and alkali metal ions;

and correspondingly,

B. 70–30 parts by weight, based on the polymer solids, of an emulsion polymerized styrene interpolymer latex consisting of at least 50 weight percent of styrene with the balance thereof being a monomeric material which is interpolymerizable with the styrene and selected from the group consisting of mono-olefins, diolefins, ethylenically unsaturated nitriles, ethylenically unsaturated acids, esters of ethylenically unsaturated acids with alcohols containing 1–18 carbon atoms and vinylidene aromatic compounds other than styrene.

3,396,136
COPOLYMERS OF ALKENYL AROMATIC SULFONIC ACIDS WITH UNSATURATED MONOMERS AND THEIR USE AS THICKENERS FOR NON-POLAR SOLVENTS
Richard T. Dickerson, Midland, Mich., assignor to The Dow Chemical Company, Midland, Mich., a corporation of Delaware
No Drawing. Filed June 14, 1965, Ser. No. 463,920
24 Claims. (Cl. 260—30.6)

1. A lipophilic, linear copolymer of an alkenyl aromatic sulfonic acid monomer and a lipophilic, ethylenically unsaturated monomer copolymerizable therewith, said copolymer containing from about 0.05 to about 3 alkenyl aromatic sulfonic acid groups in polymerized form per 100 combined monomer units, said alkenyl aromatic sulfonic acid monomer having the formula:

$$CH_2=\overset{R}{\overset{|}{C}}-Ar-SO_3H$$

wherein Ar is a divalent radical selected from the group consisting of aromatic hydrocarbon radicals of the benzene series and nuclear halogenated aromatic hydrocarbon radicals of the benzene series, said divalent radicals having from 6 to 18 carbons and their valence bonds on nuclear carbon atoms, and R is a member of the group consisting of hydrogen and methyl and said lipophilic, ethylenically unsaturated monomer having the formula:

$$CH_2=\overset{R}{\overset{|}{C}}-Ar$$

wherein Ar is a monovalent radical selected from the group consisting of aromatic hydrocarbon radicals of the benzene series and nuclear halogenated aromatic hydrocarbon radicals of the benzene series, said radicals having from 6 to 18 carbons and their valence bonds on nuclear carbon atoms, said copolymer being characterized by a degree of polymerization sufficient to provide an average of at least about 2 sulfonic acid groups per polymer molecule.

7. A composition of matter comprising (A) a nonpolar organic solvent having a solubility parameter up to about 10.5 at 25° C. selected from the group consisting of aliphatic hydrocarbons, aromatic hydrocarbons, halogenated aromatic hydrocarbons, halogenated aliphatic hydrocarbons, mono-nitro-substituted aromatic hydrocarbons, alkyl and aryl thioethers, carbon disulfide, trialkyl and triaromatic esters of phosphoric acid and mixtures of organic solvents consisting of a major proportion of at least one solvent of the foregoing classes of nonpolar organic solvents, and (B) dissolved in the solvent, a thickening quantity within the range from about 0.05 up to about 10 percent by weight of the solvent of a metal salt of a lipophilic, linear, copolymer of an alkenyl aromatic sulfonic acid monomer and a lipophilic, ethylenically unsaturated monomer copolymerizable therewith, said copolymer containing in polymerized form from about 0.05 to about 3 of the sulfonic monomers per 100 combined monomer units, said alkenyl aromatic sulfonic acid monomer having the formula:

$$CH_2=\overset{R}{\overset{|}{C}}-Ar-SO_3H$$

wherein Ar is a divalent radical selected from the group consisting of aromatic hydrocarbon radicals of the benzene series and nuclear halogenated aromatic hydrocarbon radicals of the benzene series, said divalent radicals having from 6 to 18 carbons and their valence bonds on nuclear carbon atoms, and R is a member of the group consisting of hydrogen and methyl, and said copolymer being characterized by an average degree of polymerization sufficient to provide an average of at least about 2 sulfonic groups per polymer molecule; in which salt of the copolymer the metal cation is selected from the group consisting of mono-, di- and trivalent ions of metals that form salts with at least one of the mineral acids selected from the group consisting of hydrochloric, sulfuric, nitric and chloric acids, which salts are ionizable to provide metal ions that are not subject to spontaneous oxidation or reduction in aqueous media.

3,396,137
COMPOSITION COMPRISING AN ETHYLENE POLYMER AND AN N-SUBSTITUTED UNSATURATED CARBOXYLIC AMIDE
Willard H. Wharton, Lake Jackson, Tex., assignor to The Dow Chemical Company, Midland, Mich., a corporation of Delaware
No Drawing. Filed Mar. 5, 1965, Ser. No. 437,575
7 Claims. (Cl. 260—32.6)

Ethylene polymer compositions having substantially reduced film-to-film coefficient of friction and excellent receptivity to printing inks after surface treatment, are obtained by incorporating in the ethylene polymer an N-substituted unsaturated carboxylic amide having the formula

$$R-\overset{H}{N}-R_1-OH$$

wherein R is an unsaturated aliphatic acyl radical having from 22 to 32 carbon atoms and R_1 is a divalent aliphatic radical having from 1 to 6 carbon atoms.

3,396,138
ORGANIC ACID RESISTANT COMPOSITIONS FROM EPOXY RESIN, POLYAMINES AND CLAY
Ernest E. Weller, Sayreville, N.J., assignor to Tile Council of America, Inc., a corporation of New York
No Drawing. Continuation-in-part of application Ser. No. 391,319, Aug. 21, 1964. This application Oct. 23, 1964, Ser. No. 406,142
43 Claims. (Cl. 260—37)

1. An epoxy resin polyfunctional amine composition which comprises:
(a) an epoxy resin having at least two

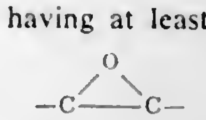

groups per molecule;
(b) a cation containing clay mineral capable of imparting improved organic acid resistance to said composition, in a sufficient amount to impart improved organic acid resistance to said composition and in an amount of at least 15 percent by weight based on said epoxy resin, said clay mineral exhibiting a base-exchange capacity of at least about 15, said clay mineral comprising an exchangeable cation which is a member selected from the group consisting of alkali and alkaline earth metal cations, and mixtures of the foregoing; and
(c) a polyfunctional amine curing agent capable of curing said epoxy resin at about room temperature and in sufficient amount to cure said epoxy resin at about room temperature.

3,396,139
ASBESTOS-MODIFIED THERMOPLASTIC POLYHYDROXYETHERS
Robert H. Snedeker, New Brunswick, N.J., assignor to Union Carbide Corporation, a corporation of New York
No Drawing. Filed Nov. 25, 1964, Ser. No. 414,023
7 Claims. (Cl. 260—37)

Thermoplastic compositions having high flexural moduli in excess of 1.0×10^6 p.s.i. have been prepared from polyhydroxyether reaction products of a dihydric phenol and an epihalohydrin having a degree of polymerization of at least 30 and from about 30 to 50% by weight, based on the weight of a thermoplastic polyhydroxyether, of highly refined Coalinga asbestos.

3,396,140
ORGANIC ACID RESISTANT COMPOSITIONS FROM EPOXY RESIN, POLYAMINE AND AMMONIUM CLAYS
Ernest E. Weller, Sayreville, N.J., assignor to Tile Council of America, Inc., New York, N.Y., a corporation of New York
No Drawing. Continuation-in-part of application Ser. No. 391,319, Aug. 21, 1964. This application July 6, 1965, Ser. No. 469,885
37 Claims. (Cl. 260—37)

1. An epoxy resin polyfunctional amine composition which comprises:
(a) an epoxy resin having at least two

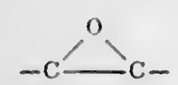

groups per molecule;
(b) ammonium cation containing clay mineral capable of imparting improved organic acid resistance to said composition, in a sufficient amount to impart improved organic acid resistance to said composition, and in an amount of at least 10 percent by weight based on weight of said epoxy resin, said clay mineral exhibiting a base-exchange capacity of at least about 15; and
(c) a polyfunctional amine curing agent capable of curing said epoxy resin at about room temperature and in sufficient amount to cure said epoxy resin at about room temperature.

3,396,141
ORGANIC ACID RESISTANT COMPOSITIONS FROM EPOXY RESINS, POLYCARBAMATES AND CLAY
Ernest E. Weller, Sayreville, N.J., assignor to Tile Council of America, Inc., New York, N.Y., a corporation of New York
No Drawing. Continuation-in-part of application Ser. No. 391,319, Aug. 21, 1964. This application July 6, 1965, Ser. No. 469,915
36 Claims. (Cl. 260—37)

1. An epoxy resin-polyfunctional amine carbamate composition which comprises:
(a) an epoxy resin having at least two

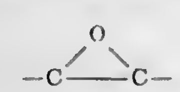

groups per molecule;
(b) a cation containing clay mineral capable of imparting improved organic acid resistance to said composition, in a sufficient amount to impart improved organic acid resistance to said composition and in an amount of at least 10 percent by weight based on weight of epoxy resin, said clay mineral exhibiting a base-exchange capacity of at least about 15, said clay mineral comprising an exchangeable cation which is a member selected from the group consisting of ammonium, alkali and alkaline earth metal cations, and mixtures of the foregoing; and
(c) a water activatable polyfunctional amine carbamate curing agent capable of curing said epoxy resin at about room temperature and in sufficient amount to cure said epoxy resin at about room temperature.

3,396,142
METHOD FOR MAKING GLASS FIBER REINFORCED THERMOPLASTIC POLYMER ARTICLES
Arthur George Little, Auburn, and Allan D. Martin, Sanford, Mich., assignors to The Dow Chemical Company, Midland, Mich., a corporation of Delaware
No Drawing. Filed Apr. 24, 1963, Ser. No. 275,223
6 Claims. (Cl. 260—41)

1. In a process for making shaped articles from a composition comprising a major proportion by weight of a normally solid thermoplastic polymer and a minor amount of glass fibers, the improvement which consists in blending together from 60 to 95 parts by weight of a normally solid thermoplastic organic polymer in the form of particles of sizes not substantially greater than 12 mesh per inch as determined by U.S. Standard screens and from 40 to 5 percent by weight of chopped strand fiber glass in lengths between $\frac{3}{16}$ and $\frac{9}{16}$ inch, and thereafter molding said mixture of materials into shaped articles by injection molding techniques.

3,396,143
POLYETHYLENE STABILIZED WITH A SYNERGISTIC STABILIZER COMBINATION
Gordon C. Newland and John W. Tamblyn, Kingsport, Tenn., assignors to Eastman Kodak Company, Rochester, N.Y., a corporation of New Jersey
No Drawing. Filed Jan. 22, 1965, Ser. No. 427,476
5 Claims. (Cl. 260—41)

A UV stabilized white thermoplastic composition comprising polyethylene and a synergistic stabilizer combination consisting essentially of a pigmenting amount of TiO_2 and 0.1–1.0% of 4,4′ - bis(2,6-di-t.-butyl-phenol), 2,2′ - methylene - bis[6-(1-methylcyclohexyl)-p-cresol], or zinc N,N-di(C_1–C_{20} alkyl) dithiocarbamate.

3,396,144
ULTRAVIOLET LIGHT STABILIZED HALOGENATED SYNTHETIC RESINS CONTAINING ZINC SALTS OF PHOSPHORUS COMPOUNDS
Robert C. Harrington, Jr., and James L. Smith, Kingsport, Tenn., assignors to Eastman Kodak Company, Rochester, N.Y., a corporation of New Jersey
No Drawing. Filed Jan. 25, 1960, Ser. No. 4,187
The portion of the term of the patent subsequent to Sept. 20, 1983, has been disclaimed
8 Claims. (Cl. 260—45.75)

A resinous film-forming polymeric composition stabilized against color degradation due to actinic radiation comprising (A) a polymeric component selected from the group consisting of homopolymers of halogenated mono-olefinic organic hydrocarbons, copolymers of halogenated mono-olefinic organic hydrocarbons with each other, and mixtures of (1) homopolymers and copolymers of halogenated mono-olefinic organic hydrocarbons and (2) homopolymers and copolymers of N-alkyl acrylamide, and (B) a stabilizing amount of a zinc stabilizer selected from the group consisting of zinc salts of mono- and dialkylated phosphates, zinc salts of mono- and dialkylated phosphites, and zinc salts of mono- and dialkylated phosphonates.

3,396,145
COMPOSITIONS OF EPOXY RESIN, LACTAM AND ALIPHATIC POLYCARBOXYLIC MATERIAL
Geza Gruenwald, Erie, Pa., assignor to General Electric Company, a corporation of New York
No Drawing. Continuation of application Ser. No. 247,284, Dec. 26, 1962. This application May 19, 1967, Ser. No. 639,913
8 Claims. (Cl. 260—47)

Epoxy resins are heat cured with lactam and polyfunctional aliphatic acid or acid anhydride to provide electrical insulating compositions having good low and high temperature flexibility.

3,396,146
REACTIVE POLYPHENYLENE OXIDE COMPOSITION
Seymour Schmukler, Dalton, Mass., assignor to General Electric Company, a corporation of New York
No Drawing. Filed Oct. 21, 1966, Ser. No. 588,289
10 Claims. (Cl. 260—47)

A heat curable polyphenylene oxide composition comprising a polyphenylene oxide, a Lewis acid, and a material capable of generating at least two carbonium ions in the presence of the Lewis acid.

3,396,147
EPOXY RESIN COMPOSITIONS OF MATTER
Robert M. Lusskin, Neenah, Wis., Frank Backer, Albany, N.Y., and John R. Larson, Upper Saddle River, N.J., assignors to Universal Oil Products Company, Des Plaines, Ill., a corporation of Delaware
No Drawing. Original application Sept. 26, 1963, Ser. No. 311,620. Divided and this application Feb. 13, 1967, Ser. No. 615,346
7 Claims. (Cl. 260—47)

The polymers comprise the reaction product of an epoxy resin with a halo-substituted polyhydromethanonaphthalenedicarboxylic acid or anhydride thereof, said polymers possessing desirable physical characteristics such as fire retardance and color stability.

3,396,148
9,10 - BIS(HYDROXYMETHYL) - s - OCTAHYDROANTHRACENE, ITS DERIVATIVES AND POLYESTER RESINS THEREFROM
Marjan Kolobielski, Pittsburgh, Pa., assignor to United States Steel Corporation, a corporation of Delaware
No Drawing. Filed Jan. 23, 1963, Ser. No. 253,273
13 Claims. (Cl. 260—75)

6. A polyester resin comprising a polycondensation product of equimolar amounts of 9,10-bis(acetoxymethyl)-s-octahydroanthracene and a saturated C_2 to C_{10} dicarboxylic acid.

3,396,149
PRODUCTION OF MIXED POLYESTERS FROM THE DIGLYCOL ESTERS OF AROMATIC DICARBOXYLIC ACIDS AND PHOSPHORIC ACID
Hilmar Roedel, Elsenfeld, and Erhard Siggel, Laudenbach (Main), Germany, assignors to Vereinigte Glanzstoff-Fabriken AG., Wuppertal-Elberfeld, Germany
No Drawing. Filed Mar. 8, 1963, Ser. No. 263,727
Claims priority, application Germany, Mar. 10, 1962, V 22,166
15 Claims. (Cl. 260—75)

1. A process for the production of a mixed polymeric polyester which comprises polycondensing monomers consisting essentially of (a) the bis-glycol ester of an aromatic dicarboxylic acid in admixture with (b) at least 2 up to about 15% by weight of phosphoric acid with reference to said bis-glycol ester, the glycol component of said ester being selected from the group consisting of aliphatic and cycloaliphatic glycols of 2 to 8 carbon atoms in a saturated linear hydrocarbon structure between two functional hydroxy groups and the dicarboxylic acid component of said ester containing its two carboxylic acid groups substituted on an aromatic nucleus and separated from each other by a hydrocarbon chain of at least 4 carbon atoms.

3,396,150
METHYL AND ALLYL ISOCYANATE COPOLYMER AND PROCESS THEREFOR
Charles A. Dickson, Newark, and William P. Ter Horst, Rehoboth Beach, Del., assignors to Chemetron Corporation, Chicago, Ill., a corporation of Delaware
No Drawing. Filed Jan. 25, 1965, Ser. No. 427,949
7 Claims. (Cl. 260—77.5)

A polymerized allyl isocyanate and methyl isocyanate copolymer is formed by catalytically polymerizing allyl isocyanate and methyl isocyanate monomers. The copolymers are highly transparent, having low melting ranges and are readily compression molded. The copolymers may be used to make self-supporting films.

3,396,151
POLYAMIDES FROM METHYLENE DIBENZOIC ACID CHARACTERIZED BY RELATIVELY HIGH SOFTENING AND MELTING POINTS
John R. Caldwell, Kingsport, Tenn., assignor to Eastman Kodak Company, Rochester, N.Y., a corporation of New Jersey
No Drawing. Filed Jan. 31, 1962, Ser. No. 170,240
3 Claims. (Cl. 260—78)

1. A resinous polyamide of equimolar proportions of 4,4'-methylenedibenzoic acid and m-xylene-α,α'-diamine, said polyamide having a softening point of from 210–310° C.

3,396,152
PROCESS OF CURING AN ACRYLIC ELASTOMER
James C. W. Henning, Akron, Ohio, assignor to The Firestone Tire & Rubber Company, Akron, Ohio, a corporation of Ohio
No Drawing. Filed Mar. 23, 1964, Ser. No. 354,130
2 Claims. (Cl. 260—79.5)

An acrylic elastomer, preferably an ester of an alkyl acrylate, methacrylate or ethacrylate in which the alkyl group contains 1 to 8 carbon atoms is milled with an organic peroxide and sulfur on a hot mill and then heated to cure. The elastomer is usually reinforced with a carbon black, a silicon compound, clay, calcium carbonate, etc. The elastomer is intended for use in gaskets, hydraulic hose, electrical insulators, etc.

3,396,153
SULFO-N-ALKYLPROPIONAMIDE SALTS AS EMULSIFYING AGENTS IN POLYMERIZATION OF UNSATURATED COMPOUNDS
Emil Alfred Vitalis, Stamford, and Ralph Joseph Chamberlain, Glenbrook, Conn., assignors to American Cyanamid Company, Stamford, Conn., a corporation of Maine
No Drawing. Filed Nov. 5, 1963, Ser. No. 321,449
13 Claims. (Cl. 260—80.7)

1. A process which comprises polymerizing ethylenically unsaturated substantially water insoluble compounds in an aqueous medium in the presence of an ammonium or alkali metal salt of sulfo-N-alkylpropionamide prepared by sulfonating an N-alkylacrylamide resulting from reacting an α-unsaturated nitrile and an olefin in the presence of a cationoid substance and thereafter hydrolyzing to said N-alkylacrylamide, wherein the alkyl group of said salt is branched chain and contains at least 10 carbon atoms.

3,396,154
SODIUM BOROHYDRIDE AS A POLYMERIZATION INHIBITOR FOR A REDOX SYSTEM
Howard A. Chamberlin, Raleigh, and James C. Masson, Chapel Hill, N.C., assignors to Monsanto Company, St. Louis, Mo., a corporation of Delaware
No Drawing. Filed Apr. 14, 1965, Ser. No. 447,953
5 Claims. (Cl. 260—85.5)

In continuous, redox catalyzed, vinyl polymerization reaction, particularly those where acrylonitrile is the major component, sodium borohydride has been found to be an effective inhibitor to prevent further polymerization of unreacted monomers.

3,396,155
TRANSITION METAL CATALYSTS FOR THE POLYMERIZATION AND COPOLYMERIZATION OF OLEFINS
André Delbouille and Henri Toussaint, Brussels, Belgium, assignors to Solvay & Cie, Brussels, Belgium, a company of Belgium
No Drawing. Filed May 18, 1965, Ser. No. 456,864
Claims priority, application France, May 28, 1964, 976,150; Apr. 12, 1965, 12,816
16 Claims. (Cl. 260—80.78)

The catalysts are obtained by reacting of a transition metal compound such as a halide, halogeno-alkoxide, or alkoxide of a metal of Group IV*b*, V*b*, or VI*b* of the Periodic Table with a vinyl alcohol copolymer, containing from 1 to 20 molar percent of polymerized vinyl alcohol, and then activating this reaction product with a metal, hydride, or organometallic compound of a metal from Group I to III of the Periodic Table, optionally with the addition of a Friedel-Crafts type halide. The catalysts are useful for the polymerization of α-olefins and also for the copolymerization of α-olefins with each other and with non-conjugated dienes.

3,396,156
THE USE OF A COMPLEX OF A CUPROUS HALIDE AND HYDROXYLAMINE FOR THE PREPARATION OF COPPER MERCAPTIDES
Louis Laufer, Bronx, and Bernard W. Town, Mount Vernon, N.Y., assignors to Schwarz Bioresearch, Inc., Orangeburg, N.Y.
No Drawing. Filed June 24, 1964, Ser. No. 377,487
6 Claims. (Cl. 260—112.5)

1. The process for forming a cuprous salt of a sulfhydryl compound, which comprises: contacting a sulfhydryl compound with a complex of a cuprous halide and hydroxylamine at a temperature below about 80° C.

3,396,157
USE OF ESTERS OF N,N-DIALKYLHYDROXYLAMINES AND 1-HYDROXYPIPERIDINE FOR THE SYNTHESIS OF PEPTIDES AND OTHER AMIDES
Geoffrey Tyndale Young and Brian Onslow Handford, Oxford, England, assignors to National Research Development Corporation, London, England, a corporation of Great Britain
No Drawing. Filed Sept. 1, 1965, Ser. No. 484,435
Claims priority, application Great Britain, Dec. 1, 1964, 48,881/64
7 Claims. (Cl. 260—112.5)

Dialkylhydroxylamine esters, particularly N-hydroxypiperidine esters of α-amino acids or peptides are prepared and used for coupling with other α-amino acids or peptides to produce peptides without loss of optical activity.

3,396,158
PREPARATION OF ALGINIC ACID BY EXTRACTION OF ALGAE
Arne Haug, Trondheim, Norway, assignor to Norsk Institutt for Tang-og Tareforskning, Trondheim, Norway
No Drawing. Filed Nov. 2, 1964, Ser. No. 408,327
8 Claims. (Cl. 260—209.6)

1. In the method for the preparation of alginic acid by the extraction of algae and the subsequent precipitation of alginic acid from the extract, the improvement according to which the alga material is pre-extracted with an aqueous solution of a neutral alkali metal salt to convert the calcium alginate material to sodium alginate and subsequently extracting the sodium alginate-containing material with water, the pH during the process being maintained below 7.

3,396,159
PENICILLIN AND CEPHALOSPORIN DERIVATIVES
Jack Bernstein and Henrietta M. Engel, New Brunswick, N.J., assignors, by mesne assignments, to E. R. Squibb & Sons., Inc., New York, N.Y., a corporation of Delaware
No Drawing. Filed June 15, 1965, Ser. No. 464,194
12 Claims. (Cl. 260—239.1)

Compounds of the formula

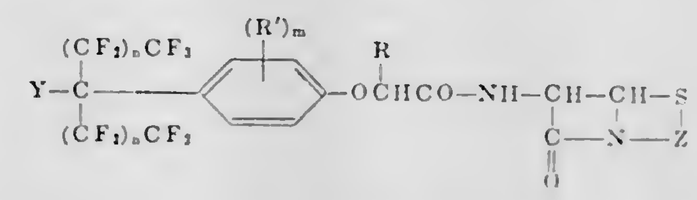

wherein R is hydrogen or lower alkyl, R' is lower alkyl, Y is hydrogen, hydroxy or halogen, *m* and *n* are zero, one or two, and Z is one of the radicals

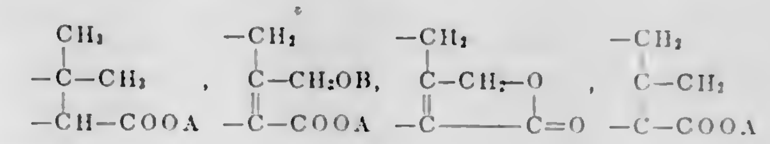

and

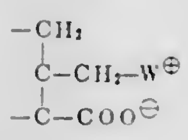

wherein A is hydrogen or a pharmaceutically acceptable cation, B is hydrogen, lower alkanoyl, benzoyl or phenyl(lower alkanoyl), and W is a quaternary amine, are prepared by interacting a compound of the formula

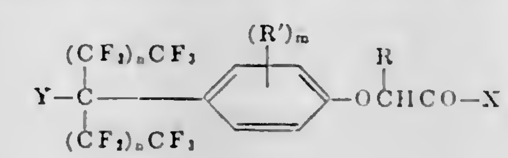

wherein R, R', Y, *m* and *n* are as above defined and CO—X is an acylating group, with a compound of the formula

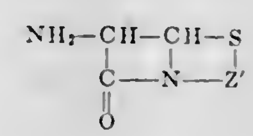

wherein Z' is the same as Z, except for the quaternary amine alternative. The quaternary amines are formed by reacting the corresponding compounds, wherein Z contains an acyloxy group, with a tertiary amine. The compounds possess antibacterial activity.

3,396,160
2 - OXO - 4 - (INDOL - 3 - YL) - HEXAHYDRO-1H-AZEPINES AND PROCESSES FOR THEIR PREPARATION
Jackson B. Hester, Jr., Portage, Mich., assignor to The Upjohn Company, Kalamazoo, Mich., a corporation of Delaware
No Drawing. Original application June 22, 1965, Ser. No. 466,102, now Patent No. 3,347,866, dated Oct. 17, 1967. Divided and this application Oct. 24, 1966, Ser. No. 588,713
11 Claims. (Cl. 260—239.3)

1. A compound of the formula:

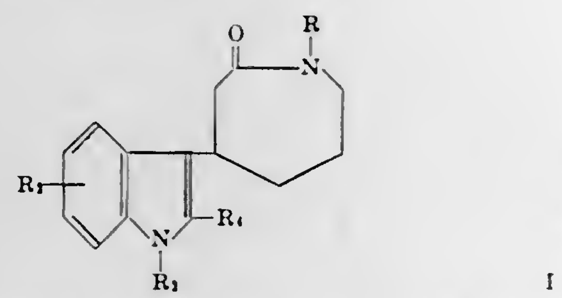

I

wherein R, R_3, and R_4 are hydrogen or alkyl of not more than 4 carbon atoms, and R_2 is hydrogen, alkyl of not more than 4 carbon atoms, alkoxy of not more than 4 carbon atoms, or halogen.

3,396,161
PROCESS FOR THE MANUFACTURE OF 6α,9α-DIFLUORO-1,4-PREGNADIENE-3,20-DIONES
Klaus Irmscher, Darmstadt, Karl-Heinz Bork, Darmstadt-Arheilgen, and Hans-Günther Kraft, Darmstadt, Germany, assignors to E. Merck AG., Darmstadt, Germany
No Drawing. Filed Mar. 22, 1966, Ser. No. 536,290
Claims priority, application Germany, Mar. 23, 1965, M 64,612
3 Claims. (Cl. 260—239.55)

In a process for the production of anti-phlogistic compounds selected from the group consisting of 6α,9α-difluoro-16-methylene-1,4-pregnadiene - 11β, 17α-diol-3,20-dione and 6α,9α - difluoro-16-methylene-1,4-pregnadiene-17α-ol-3,11,20-trione by the treatment of 6α-fluoro-16-methyl-4,16-pregnadiene-3,20-dione in conventional reaction steps, which treatment comprises:

(a) Epoxidation of the 16,17-double bond,

(b) Cleavage of resultant 16α,17α-oxide groups whereby to form a 17α-hydroxy and a 16-methylene group,

(c) Introduction of a hydroxy group at the 11-position,

(d) Introduction of a fluorine atom at the 9α-position, and

(e) Formation of a 1,2-double bond, the improvement comprising: conducting the treatment by performing (c) as the first step; performing (e) before (a) in the further course of the reaction; and introducing a double bond at the 9(11)-position after performing step (c) but before step (e).

3,396,162
2,4 - BIS - SUBSTITUTED - BENZYLIDENE OR -PYRIDYLMETHYLENE - 8 - THIABICYCLO [3.2.1]OCTAN-3-ONES
Malcolm R. Bell, East Greenbush, N.Y., assignor to Sterling Drug Inc., New York, N.Y., a corporation of Delaware
No Drawing. Filed May 28, 1964, Ser. No. 371,126
16 Claims. (Cl. 260—240)

2,4-bis(substituted-benzylidene) or -pyridylmethylene-8-thiabicyclo[3.2.1]octan-3-ones and S-oxygenated derivatives thereof, having pharmacodynamic properties, are prepared by condensing 8-thiabicyclo[3.2.1]octan-3-one with the appropriate benzaldehyde or pyridinecarboxaldehyde, followed, if desired, by oxidation of the sulfur atom with hydrogen peroxide or a like oxidizing agent.

3,396,163
DERIVATIVES OF 5-NITRO-2-FURALDEHYDE
Wilfred Herbert Hook, Brooklands, Sale, and Jack Raymond Green, Romiley, England, assignors to Geigy Chemical Corporation, Greenburgh, N.Y., a corporation of Delaware
No Drawing. Filed Sept. 10, 1965, Ser. No. 486,532
Claims priority, application Great Britain, Sept. 12, 1964, 37,390/64
4 Claims. (Cl. 260—240)

5 - nitro - 2-furfurylidene- amino-triazolones of the formula:

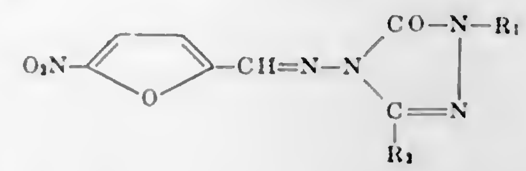

wherein R_1 is hydrogen, or hydroxy-lower alkyl, halogen-lower alkyl, lower alkanoyl, lower alkenoyl or lower alkoxycarbonyl, and R_2 is hydrogen or lower alkyl, are disclosed to have useful antimicrobial properties, being valuable antibacterial, antifungal, anthelminthic or coccidiostatic agents for external use in human or veterinary medicine. 4 - (5′-nitro-2′ - furfurylideneamino) - 1:2:4-triazolone-5 is particularly useful.

3,396,164
NAPHTHOXAZINONES
Uberto Teotino and Davide Della Bella, Milan, Italy, assignors to Whitefin Holdings S.A., Lugano, Switzerland
No Drawing. Filed Jan. 7, 1966, Ser. No. 522,340
Claims priority, application Great Britain, Jan. 28, 1965, 3,845/65
7 Claims. (Cl. 260—244)

Halogen-substituted dihydronaphtho-1,3-oxazine-4-ones of the formula

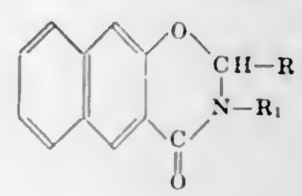

wherein R is a haloalkyl of from 1 to 4 carbon atoms and R_1 is hydrogen or a lower alkyl are prepared by reacting in an acidic organic solvent medium a hydroxycarbamido-naphthalene of the formula

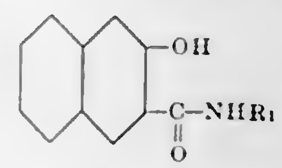

wherein R_1 is as defined above, with a compound of the formula A–X wherein A is —CHO, —$CH(OCH_2—CH_3)_2$ or —$CH(OCH_3)_2$ and X is halophenyl or a haloalkyl of 1 to 4 carbon atoms. The 2-halo-substituted dihydronaphtho-1,3-ozazine-4 one products have therapeutic applications.

3,396,165
9 - AMINOMETHYL - 3,8 - DILOWERALKYL - 10-HYDROXY - 5 - OXO - 1,2,3,4 - TETRAHYDROBENZOPYRANO[3,4-c]PYRIDINES
James W. Bolger, Canoga Park, Calif., assignor to Rexall Drug and Chemical Company, Los Angeles, Calif., a corporation of Delaware
No Drawing. Filed June 14, 1965, Ser. No. 463,858
7 Claims. (Cl. 260—247.2)

This invention is directed to 9-mono and diloweralkylaminomethyl substituted 3,8-dimethyl-10-hydroxy-5-oxo-1,2,3,4 - tetrahydrobenzopyrano[3,4-c]pyridines and their 9-pyrrolidinomethyl-, 9-piperidinomethyl-, 9-morpholino-methyl-, and 9-(4-methylpiperazino)-methyl substituted equivalents. These compounds have activity as analgesic and hypotensive agents. The compounds are prepared by the Mannich reaction.

3,396,166
7-AMINOMETHYL-8-HYDROXY-5-OXO-1,2,3,4-TETRAHYDROBENZOPYRANO[3,4-c]PYRIDINES
James W. Bolger, Canoga Park, Calif., assignor to Rexall Drug and Chemical Company, Los Angeles, Calif., a corporation of Delaware
No Drawing. Filed June 14, 1965, Ser. No. 463,951
7 Claims. (Cl. 260—247.2)

This invention is directed to 7-aminomethyl-8-hydroxy-5-oxo-1,2,3,4-tetrahydrobenzopyrano[3,4-c]pyridines and their 7-pyrrolidinomethyl, 7-piperidinomethyl, 7-morpholinomethyl and 7-(4-methylpiperazino)methyl-substituted equivalents. These compounds have activity as analgesic agents and exert an effect upon the central nervous system. The compounds are prepared by the Mannich reaction.

3,396,167
ISOCYANURATE PRODUCTION
Alwyn G. Davies, London, England, assignor to M. & T. Chemicals Inc., New York, N.Y., a corporation of Delaware
No Drawing. Filed Sept. 10, 1965, Ser. No. 486,561
7 Claims. (Cl. 260—248)

In accordance with certain of its aspects, the process of this invention for preparing isocyanurates comprises condensing at least one organic isocyanate in the presence of an organotin compound R_3SnOR' wherein R is selected from the group consisting of alkyl, aryl, and alkenyl and R′ is selected from the group consisting of alkyl, aryl, alkenyl, hydrogen, and —SnR_3 thereby forming said isocyanurate; and recovering said isocyanurate.

3,396,168
DIBENZOCYCLOHEPTANE DERIVATIVES
Geradus Johannes Bertramszoon Corts, Haarlem, Netherlands, assignor to N.V. Koninklijke Pharmaceutische Fabrieken v/h Brocades-Stheeman & Pharmacia Meppel, Netherlands
No Drawing. Filed Feb. 12, 1964, Ser. No. 344,235
Claims priority, application Great Britain, Aug. 6, 1963, 31,052/63
13 Claims. (Cl. 260—292)

N-substituted - 3 - (dibenzo[a,d]-1,4-cycloheptadien-5-yloxy)nortropane derivatives in which the substituent on the tertiary N of the tropane nucleus is an alkyl having 2 to 8 carbon atoms, an aralkyl containing up to 8 carbon atoms in the alkyl moiety or a hydroxyalkyl containing up to 8 carbon atoms.

3,396,169
SUBSTITUTED 2-PHENYL-1-(TERTIARY-AMINOALKOXY)PHENYL - 3,4 - DIHYDRONAPHTHALENES
Daniel Lednicer, Kalamazoo, Mich., assignor to The Upjohn Company, Kalamazoo, Mich., a corporation of Delaware
No Drawing. Continuation-in-part of application Ser. No. 135,767, Sept. 5, 1961. This application Oct. 26, 1966, Ser. No. 589,511
The portion of the term of the patent subsequent to Jan. 5, 1982, has been disclaimed
14 Claims. (Cl. 260—294.7)

This invention is a group of compounds consisting of (a) the free bases, (b) the pharmacologically acceptable acid addition salts, (c) the N-oxides, (d) the N-oxide pharmacologically acceptable acid addition salts, and (e) the quaternary ammonium salts of compounds having the formula:

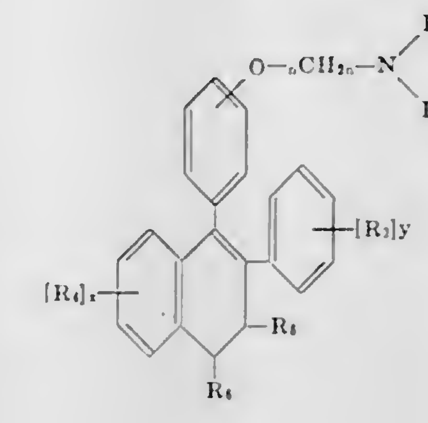

wherein R_1 and R_2 are selected from the class consisting of lower-alkyl and lower-alkyl linked together to form a 5 to 7 ring atom saturated heterocyclic radical, one of the ring atoms of which, in addition to the amino nitrogen atom, is selected from the class consisting of carbon, nitrogen, and oxygen, the other ring atoms being carbon, R_3 and R_4 are selected from the class consisting of trifluoromethyl, lower-alkyl, lower-alkenyl, hydroxy, lower-alkenyloxy, aryloxy from 6 to 12 carbon atoms, inclusive, halogen, lower-alkylmercapto, and arylmercapto from 6 to 12 carbon atoms, inclusive, C_nH_{2n} represents an alkylene group from 2 to 6 carbon atoms, inclusive, x and y are integers from 0 to 4, inclusive, and R_5 and R_6 are selected from the class consisting of hydrogen and lower-alkyl. These compounds are useful as anti-inflammatory agents, antifertility agents, estrogenic agents, antiestrogenic agents, gonadotrophin regulators, agents for the lowering of cholesterol blood levels, and central nervous system stimulants in the treatment of birds and mammals, including man and animals of economic value. For these purposes, these compounds exhibit an improved therapeutic ratio compared with known agents. The novel compounds of this invention are also useful as antibacterial, antifungal, and agents.

3,396,170
ALUMINUM HYDRIDE TETRAZOLE COMPLEXES AND SYNTHESIS THEREOF
Neil R. Fetter, Arlington, Calif., and Bodo K. W. Bartocha, Indian Head, Md., assignors to the United States of America as represented by the Secretary of the Navy
No Drawing. Filed Apr. 3, 1962, Ser. No. 184,859
14 Claims. (Cl. 260—299)

1. A process for the preparation of aluminum hydride tetrazole complexes comprising adding a member selected from the group consisting essentially of aluminum hydride etherate and aluminum hydride trimethylamine to a member selected from the group consisting of 2-methyltetrazole, 2-ethyltetrazole, 5-ethyltetrazole, 2-methyl-5-vinyltetrazole, 2-ethyl-5-aminotetrazole, 1-alkyl-5-aminotetrazole, and 2-methyl-5-cyanotetrazole at a reaction temperature ranging from 0° to —196° C., warming to room temperature, and stirring for about 30 minutes until a precipitate forms.

10. An aluminum hydride complex with a member selected from the group consisting of 2-methyltetrazole, 2-ethyltetrazole, 5-ethyltetrazole, 2-methyl-5-vinyltetrazole, 2-ethyl-5-aminotetrazole, 1-alkyl-5-aminotetrazole, and 2-methyl-5-cyanotetrazole.

3,396,171
2:3:4:5-TETRAHYDRO-1:4-METHANO-1H-3-BENZAZEPINS
Karl Schenker, Basel, Switzerland, assignor to Ciba Corporation, New York, N.Y., a corporation of Delaware
No Drawing. Filed May 21, 1965, Ser. No. 457,858
Claims priority, application Switzerland, June 10, 1964, 7,584/64; Apr. 28, 1965, 5,888/65
19 Claims. (Cl. 260—326.3)

Compounds of the formula

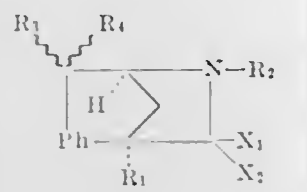

in which

Ph is an optionally substituted ortho-phenylene radical.
R_1 is hydrogen or an optionally substituted hydrocarbon radical.
R_2 is hydrogen or an optionally substituted hydrocarbon radical.
R_3 and R_4 together represent an oxo group or R_3 is hydrogen and R_4 is hydrogen or a free, etherified or esterified hydroxyl group or R_3 is an optionally substituted hydrocarbon radical and R_4 a free, etherified or acylated hydroxyl group.
X_1 and X_2 each is a hydrogen atom or may stand together for an oxo group, in the free form or in the form of their salts, e.g., the 1-phenyl-3-methyl-2,3,4,5-tetrahydro-1,4-methano-1H-3-benzazepine.
Use: Starting materials and diuretic or analgetic agents.

3,396,172
ANTHRAQUINONE DYES CONTAINING PYROMELLITAMIDE GROUPS
Willy Braun, Heidelberg, and Ernst Schefczik, Ludwigshafen (Rhine), Germany, assignors to Badische Anilin- & Soda-Fabrik Aktiengesellschaft, Ludwigshafen (Rhine), Germany
No Drawing. Filed Dec. 28, 1965, Ser. No. 517,067
Claims priority, application Germany, Jan. 2, 1965, B 79,973
4 Claims. (Cl. 260—326)

This invention relates to dyes of the formula

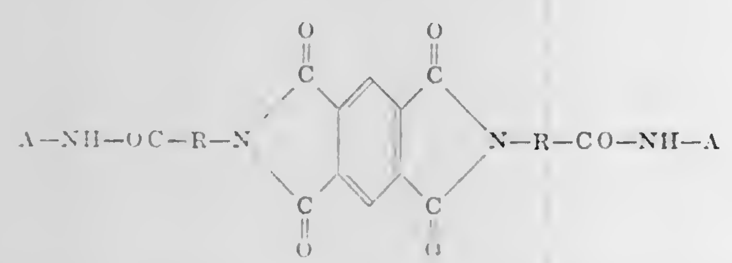

wherein R denotes an alkylene group having one to five carbon atoms or one of the groups:

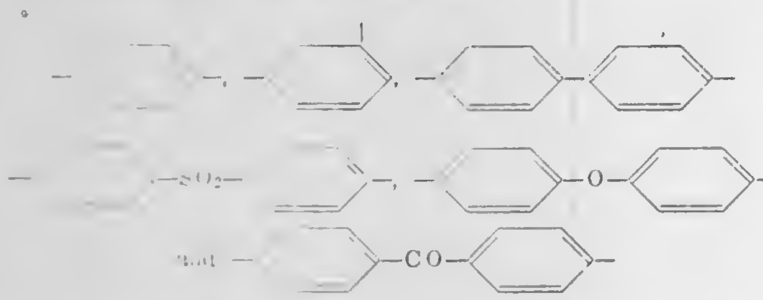

and A denotes the radical of an anthraquinone dye which is free from sulfonic acid groups.

3,396,173
SYNTHESIS OF EPISULFIDES
Ronald C. Vander Linden and Juan M. Salva, Sarnia, Ontario, and Peter A. C. Smith, Petrolia, Ontario, Canada, assignors to Esso Research and Engineering Company, a corporation of Delaware
No Drawing. Filed Jan. 4, 1966, Ser. No. 518,539
7 Claims. (Cl. 260—327)

Episulfides, useful in the preparation of chemicals and polymers, are prepared by the vapor phase catalytic conversion of epoxides in the presence of carbon disulfide or carbonyl sulfide over alkali metal carbonates or hydroxides supported by alkaline earth metal carbonates.

3,396,174
PROCESS FOR THE PREPARATION OF SUBSTITUTED 1,3-OXATHIOL-2-ONES
Ernst Mühlbauer and Wolfgang Weiss, Cologne-Stammheim, Germany, assignors to Farbenfabriken Bayer Aktiengesellschaft, Leverkusen, Germany, a corporation of Germany
No Drawing. Filed Jan. 3, 1966, Ser. No. 517,930
Claims priority, application Germany, Mar. 18, 1965, F 45,554
7 Claims. (Cl. 260—327)

A process for producing substituted 1,3-oxathiol-2-ones by contacting a carbonyl halogen sulphenyl halide of the formula

$$\text{Hal—CO—S—Hal}$$

wherein Hal is halogen, with an oxo compound of the formula

$$R_1\text{—CO—}CH_2\text{—}R_2$$

in which the R_1 and R_2 radicals may, by example, be alkyl, cycloalkyl, aryl and a heterocyclic such as thiophene and furan; the reaction being effected with at least a stoichiometric amount of the reactants and at a temperature of about—20° to about 250° C. The products are useful as fungicides.

3,396,175
EPISULPHIDE PRODUCTION
Friedrich K. Lautenschlaeger, Toronto, Ontario, and Norman V. Schwartz, Oakville, Manitoba, Canada, assignors to The Dunlop Company Limited, London, England, a British company
No Drawing. Filed July 28, 1966, Ser. No. 568,410
Claims priority, application Great Britain, Aug. 10, 1965, 34,104/65
15 Claims. (Cl. 260—327)

Preparation of monomeric vicinal episulphides by reducing a chloropolysulphide, being the reaction product of a hydrocarbon olefin with a sulphur chloride compound having a mol ratio of sulphur to chlorine of at least 0.5:1 using as the catalyst a sulphide of a metal of the A sub-group of Group I of the Mendeléeff Periodic Table in an amount such that the mol ratio of the metal sulphide:chloropolysulphide is from 1:1 to 6:1, said metal sulphide being in the dry powdered, flake or granular form. These episulphides may be polymerized or copolymerized to form polymers useful, for example, in adhesive compositions.

3,396,176
PARADIOXADIENE-N_2F_4 ADDUCTS HAVING ONE NF_2 GROUP ATTACHED TO EACH OF TWO OR FOUR CARBON ATOMS IN THE DIOXADIENE RING
Ralph J. Leary and Perry A. Argabright, Cranford, and James R. Michael, Roselle, N.J., assignors to Esso Research and Engineering Company, a corporation of Delaware
No Drawing. Filed Dec. 21, 1960, Ser. No. 77,469
4 Claims. (Cl. 260—340.6)

1. A compound selected from the group consisting of (I) $C_4H_4O_2N_2F_4$ and (II) $C_4H_4O_2N_4F_8$, the compound of

Formula I having one NF_2 group attached to each of two carbon atoms in the ring nucleus of p-dioxadiene which retains one reactive double bond, and the compound of Formula II having one NF_2 group attached to each of four carbon atoms in the ring nucleus of p-dioxadiene with its double bonds thus saturated.

3. A process of preparing a compound having the empirical formula $C_4H_4O_2N_2F_4$ which consists of reacting p-dioxadiene with an equimolar proportion of N_2F_4 at 60° C. to 100° C. for 2 to 3 hours under subatmospheric pressure, and recovering the resulting product.

3,396,177
METAL CHELATE DERIVATIVES
David Arthur Thornton, Birmingham, and Michael Edward Benet Jones, Stapleford, Cambridgeshire, England, assignors to Ciba Limited, Basel, Switzerland, a Swiss company
No Drawing. Filed Oct. 3, 1961, Ser. No. 142,527
Claims priority, application Great Britain, Oct. 6, 1960, 34,339/60
4 Claims. (Cl. 260—348)

1. A metal chelate which contains at least 2 and at the most 4 glycidyloxyphenyl groups and which has the formula

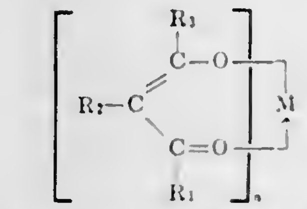

in which R_1 is p-glycidyloxyphenyl, R_2 is hydrogen and R_3 is methyl or ethyl, and M is divalent beryllium or divalent copper.

3,396,178
PRODUCTION OF CHLOROQUINONES
Solomon Marmor, Las Vegas, N. Mex., assignor to Research Corporation, New York, N.Y., a non-profit corporation of New York
No Drawing. Filed Sept. 20, 1965, Ser. No. 488,733
3 Claims. (Cl. 260—396)

Chloroquinones of the benzene and naphthalene series are produced by subjecting the corresponding quinones to the action of aqueous hypochlorous acid and an organic peroxide in a common solvent for the reactants.

3,396,179
PROCESS FOR THE PREPARATION OF STEROIDAL 6-HALOMETHYL-4,6-DIEN-3-ONES
Derek Burn, Robert Victor Coombs, and Vladimir Petrow, London, England, assignors to The British Drug Houses Limited
No Drawing. Filed May 12, 1966, Ser. No. 549,473
Claims priority, application Great Britain, May 18, 1965, 20,936/65; June 18, 1965, 25,841/65
8 Claims. (Cl. 260—397.4)

This invention is for improvements in or relating to organic compounds and has particular reference to a new and improved process for the preparation of steroidal 6-halomethyl-4,6-dien-3-ones. The process comprises treating a corresponding steroidal 6-methylen-4-en-3-one with a hypohalous acid.

3,396,180
POLYAMIDE RESIN COMPOSITIONS OF ETHYLENE - DIAMINE AND FRACTIONATED POLYMERIC FAT ACIDS
Don E. Floyd, Robbinsdale, and Richard J. Ess and Leonard R. Vertnik, Minneapolis, Minn., assignors to General Mills, Inc., a corporation of Delaware
Filed Jan. 31, 1964, Ser. No. 341,693

1. In an ethylene-diamine polyamide or polymeric fat acids prepared by reacting said diamine and polymeric fat acids at temperatures in the range of 150 to 300° C. employing essentially one molar equivalent of amine per molar equivalent of carboxyl group, said polymeric fat acids being polymerized monocarboxylic aliphatic acids

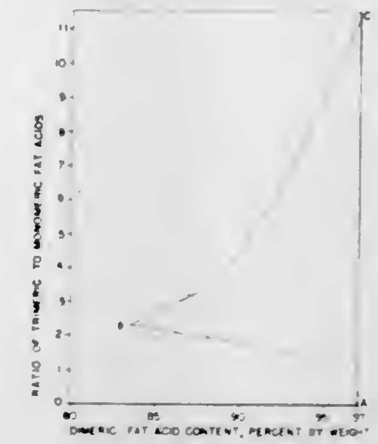

having from 8 to 24 carbon atoms, the improvement comprising employing a polymeric fat acid having a dimeric fat acid content and a ratio of trimeric to monomeric fat acids defined substantially within the area ABC of FIG. 1 as determined by micromolecular distillation.

3,396,181
SUPERBODIED OILS
Charles E. Penoyer, Chagrin Falls, Ohio, assignor to The Sherwin-Williams Company, Cleveland, Ohio, a corporation of Ohio
Filed Oct. 13, 1965, Ser. No. 495,596
7 Claims. (Cl. 260—407)

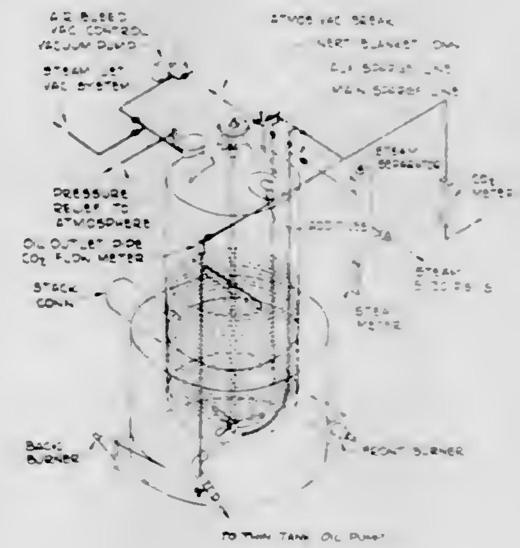

There is provided an improved process for superbodying unsaturated fatty oils to produce a product which is free from gelled particles and false body and having a viscosity in the range of from 20 minutes to 75 minutes, Gardner-Holdt. The process is characterized by first thermally bodying the oil by causing it to polymerize under the influence of heat, and finally subjecting the oil in bulk form to oxidative polymerization.

3,396,182
PROCESS FOR RECOVERY OF PURIFIED SATURATED HIGHER FATTY ACID FROM FATTY ACID FRACTIONS
Dwight E. Leavens and John M. Derfer, Jacksonville, Fla., assignors, by mesne assignments, to SCM Corporation, New York, N.Y., a corporation of New York
No Drawing. Filed Jan. 21, 1966, Ser. No. 522,039
10 Claims. (Cl. 260—419)

A process for purifying and recovering crude fatty acids comprising: (1) recrystallization of the crude acids from

liquid normal alkane solution, (2) further purifying the recrystallized acids, in liquid normal alkane solution, with an acidic reagent such as boron trifluoride, (3) removing the acidic reagent, and (4) recrystallizing the purified fatty acids from the liquid normal alkane solution.

3,396,183
ONE STEP PREPARATION OF METAL ORGANO DITHIOPHOSPHATES
Jay Brasch, Elizabeth, N.J., assignor to Esso Reseach and Engineering Company, a corporation of Delaware
No Drawing. Filed Apr. 29, 1964, Ser. No. 363,585
12 Claims. (Cl. 260—429)

A metal salt of an organo dithiophosphoric acid is prepared by reaction of P_2S_5 with a slurry comprising a mixture of at least one organic hydroxy compound of from 1 to 30 carbon atoms and at least one metal in powdered form, the metal being above hydrogen in the electromotive series, the quantity of metal in the slurry being at least 90 percent of the amount of metal theoretically required to convert the organic hydroxy compound to a metal diorgano dithiophosphate.

3,396,184
TRIALKYL-DIHALOTANTALUM AND NIOBIUM COMPOUNDS
Gordon L. Juvinall, Monrovia, Calif., assignor to the United States of America as represented by the Administrator of the National Aeronautics and Space Administration
No Drawing. Filed July 9, 1965, Ser. No. 470,902
5 Claims. (Cl. 260—429)

Novel organo-metallic compounds of the formula R_3MX_2 are disclosed. R_3 is an alkyl group containing from one to four carbon atoms, M is tantalum or niobium and X is halogen. The compounds are prepared by reacting at low temperature under vacuum in an inert organic solvent, a dialkyl zinc compound with a tantalum or niobium pentahalide and recovering the desired compound. These volatile compounds can be pyrolyzed to deposit a film of metal on a variety of substrates.

3,396,185
POLYMERIC ORGANO TIN MERCAPTIDES AND CARBOXYLATES AND THE PREPARATION THEREOF
Ingenuin Hechenbleikner, Kenwood, Raymond S. Dalter, Cincinnati, and John F. Hussar, Loveland, Ohio, assignors to Carlisle Chemical Works, Inc., Reading, Ohio, a corporation of Ohio
No Drawing. Filed Jan. 22, 1965, Ser. No. 427,487
31 Claims. (Cl. 260—429.7)

Compounds are prepared having a formula selected from the group consisting of

(a)
$$\left(\mathrm{R}\overset{\overset{|}{\mathrm{O}}}{\underset{|}{\overset{|}{\mathrm{Sn}}}}\mathrm{OOC}\left(\overset{\mathrm{R_5}}{\overset{|}{\mathrm{CH}}}\right)_q\mathrm{OH}\right)_n$$

(b)
$$\left(\mathrm{R}\overset{\overset{|}{\mathrm{O}}}{\underset{|}{\overset{|}{\mathrm{Sn}}}}\mathrm{-S(CH_2)_qCOOR_1}\right)_n$$

(c)
$$\left(\mathrm{R}\overset{\overset{|}{\mathrm{O}}}{\underset{|}{\overset{|}{\mathrm{Sn}}}}\mathrm{-OOC(CH_2)_mCOOR_1}\right)_n$$

(d)
$$\left(\mathrm{R}\overset{\overset{|}{\mathrm{O}}}{\underset{|}{\overset{|}{\mathrm{Sn}}}}\mathrm{-OOCCH{=}CHCOOR_1}\right)_n \text{; and}$$

(e) the reaction product of 1 mole of a compound having the formula RSnOOH with 2 to 2.5 moles of a compound having a formula selected from the group consisting of

$$\mathrm{HOOC}\left(\overset{\mathrm{R_5}}{\overset{|}{\mathrm{CH}}}\right)_q\mathrm{OH}$$

$$\mathrm{HS(CH_2)_qCOOR_1;\ HOOCR_4}$$
$$\mathrm{HOOC(CH_2)_mCOOR_1\ and\ HOOCCH{=}CHCOOR_1}$$

where R, and R_1 are hydrocarbyl; R_4 is selected from the group consisting of hydrogen and hydrocarbyl; R_5 is selected from the group consisting of hydrogen and methyl; *n* is an integer of at least 2; *m* is selected from the group consisting of zero and a positive integer; and *q* is an integer of at least one. The compounds are useful as stabilizers for halogen containing resins and hydrocarbon polymers.

3,396,186
BORON ACID ESTER OF PHENONE
Henryk A. Cyba, Evanston, Ill., assignor to Universal Oil Products Company, Des Plaines, Ill., a corporation of Delaware
No Drawing. Filed May 25, 1965, Ser. No. 458,785
8 Claims. (Cl. 260—462)

Boron esters of 2-hydroxybenzophenones suitable for use as additives in organic substrates such as plastics, gasoline, lubricating oils and greases.

3,396,187
β-DI AND TRINITRO CARBONATES AND METHOD FOR THEIR PRODUCTION
Theodore M. Benziger, Leonard W. Kissinger, and Herbert E. Ungnade, Los Alamos, N. Mex., assignors to the United States of America as represented by the United States Atomic Energy Commission
No Drawing. Filed June 3, 1964, Ser. No. 372,420
9 Claims. (Cl. 260—463)

A method for the esterification of aliphatic beta di- and trinitro alcohols with an acid chloride and pyridine and compounds formed by this method. These compounds are useful as components of explosives and propellants.

3,396,188
COLCHICINIC INTERMEDIATES AND PROCESS FOR THEIR PREPARATION
Jacques Martel, Bondy, Edmond Toromanoff, Paris, and Chanh Huynh, Villemomble, France, assignors to Roussel-UCLAF, Paris, France, a corporation of France
No Drawing. Filed Dec. 1, 1964, Ser. No. 415,149
Claims priority, application France, Dec. 5, 1963, 956,175
14 Claims. (Cl. 260—465)

Carboxylic acid ester - cyanoethyldihydro-benzocycloheptenes and preparation thereof. These compounds are useful as colchicinic intermediates.

3,396,189
METHOD FOR PREPARING METHACRYLONITRILE AND ACRYLONITRILE BY CATALYTIC AMMOXIDATION OF ISOBUTYLENE OR PROPYLENE
Jamal S. Eden, Akron, Ohio, assignor to The B. F. Goodrich Company, New York, N.Y., a corporation of New York
No Drawing. Filed Aug. 30, 1965, Ser. No. 483,791
10 Claims. (Cl. 260—465.3)

Acrylonitrile or methacrylonitrile are prepared by reacting at an elevated temperature propylene or isobutylene, ammonia and oxygen in the presence of a catalyst containing molybdenum oxide, tellurium oxide and an aluminum phosphate.

3,396,190
PROCESS FOR ALIPHATIC NITRILES
Dorothee M. McClain and Irving L. Mador, Cincinnati, Ohio, assignors to National Distillers and Chemical Corporation, New York, N.Y., a corporation of Virginia
No Drawing. Filed Oct. 11, 1965, Ser. No. 494,961
18 Claims. (Cl. 260—465.1)

A process for the preparation of alkyl mononitriles and mixtures thereof with alkenyl mononitriles by the reaction of a primary alkyl amine with oxygen in the presence of a Group VIII noble metal-containing catalyst, e.g. palladium or platinum group metals, salts and oxides. The reaction may be carried out at temperatures ranging from about 90° to 175° C. and at atmospheric or near atmospheric pressures.

3,396,191
PRODUCTION OF ESTERS OF UNSATURATED ALIPHATIC DICARBOXYLIC ACIDS
Walter Reppe, Heidelberg, and August Magin, Mutterstadt, Pfalz, Germany, assignors to Badische Anilin- & Soda-Fabrik Aktiengesellschaft, Ludwigshafen (Rhine), Germany
No Drawing. Continuation-in-part of application Ser. No. 188,263, Apr. 17, 1962. This application July 7, 1964, Ser. No. 380,932
Claims priority, application Germany, Apr. 19, 1961, B 62,191
8 Claims. (Cl. 260—485)

A process for the production of unsaturated dicarboxylic esters in which a substantial anhydrous alcohol is contacted with acetylene, nickel tetracarbonyl, and a nonoxidizing acid at temperatures of 30° to 120° C. The process is carried out in the presence of a copper salt and a complex-forming compound such as N-N-dialkylaniline. A stoichiometric excess of the nickel tetracarbonyl over the acid is present in the reaction mixture and the ratio by weight of acetylene to the carbon monoxide content of nickel tetracarbonyl is from 1.3:1 to 5:1. The process is capable of producing unsaturated dicarboxylic esters in a ratio by weight of unsaturated dicarboxylic ester to acrylic ester of greater than 1:1.

3,396,192
METHOD OF PREPARING 5-(γ-DIMETHYLAMINOPROPYLIDENE) - 5H - DIBENZO[a,d] - 10,11 - DIHYDROCYCLOHEPTENE
Norman L. Wendler, Summit, and David Taub, Metuchen, N.J., assignors to Merck & Co., Inc., Rahway, N.J., a corporation of New Jersey
No Drawing. Filed Feb. 2, 1965, Ser. No. 429,922
2 Claims. (Cl. 260—570.8)

A method of preparing 5 - (γ - dimethylaminopropylidene)-5H-dibenzo[a,d]-10,11-dihydrocycloheptene by reaction of 5-methyl-5H-dibenzo[a,d]-10,11-dihydrocycloheptene with bromine to produce the corresponding bromomethylene derivative, followed by reaction of the bromomethylene derivative with magnesium to produce the corresponding Grignard reagent and reacting said Grignard reagent with dimethylaminoethyl chloride in the presence of tetrahydrofuran to produce the desired product.

3,396,193
HALOGENATED CIS-CINNAMIC ACIDS
Louis Freedman, New York, and A Jay Merritt, New Rochelle, N.Y., assignors to U.S. Vitamin & Pharmaceutical Corporation, a corporation of Delaware
No Drawing. Continuation-in-part of application Ser. No. 240,152, Nov. 26, 1962, which is a continuation-in-part of application Ser. No. 857,497, Dec. 7, 1959. This application July 1, 1965, Ser. No. 468,966
7 Claims. (Cl. 260—521)

Halogenated cis-cinnamic acids of the formula

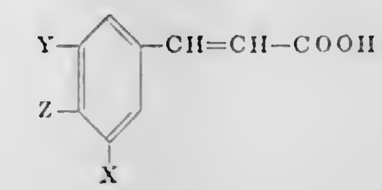

wherein X is halogen, Y is hydrogen or halogen and Z is hydrogen or hydroxy are prepared by irradiating with ultra violet light the corresponding trans-cinnamic acid. The compounds reduce capillary fragility and inflammation. Preferably, the halogen is a chlorine or bromine.

3,396,194
PREPARATION OF AROMATIC SULFONYL BROMIDES VIA THE AQUEOUS BROMINATION OF AROMATIC SULFONYL HYDRAZIDES
Frank A. Magnotta, Millersville, and Algirdas C. Poshkus, Lancaster, Pa., assignors to Armstrong Cork Company, Lancaster, Pa., a corporation of Pennsylvania
No Drawing. Filed Sept. 19, 1963, Ser. No. 310,137
6 Claims. (Cl. 260—543)

1. The method of making an aromatic sulfonyl bromide comprising forming an aqueous reaction medium by mixing water, hydrochloric acid when the brominating agent is a mixture of sodium bromide and sodium bromate, and an aromatic sulfonylhydrazide in which the aromatic group is selected from the groups consisting of benzene, p-methoxybenzene, toluene, 3,3′-diphenyl, and naphthalene, adding a brominating agent selected from the group consisting of bromine and said mixture of sodium bromide and sodium bromate to said reaction medium, maintaining the temperature of the resultant mixture in the range of 0°–35° C., and recovering the aromatic sulfonyl bromide.

3,396,195
PROCESS FOR MAKING 2,6-DICHLORO-4-NITROANILINE
Melvin J. Visser, Portage, Mich., assignor to The Upjohn Company, Kalamazoo, Mich., a corporation of Delaware
No Drawing. Filed Oct. 11, 1965, Ser. No. 494,932
10 Claims. (Cl. 260—578)

2,6-dichloro-4-nitroaniline is prepared by chlorinating 4-nitroaniline with chlorine in ethylene dichloride containing sufficient water to absorb the hydrogen chloride as it is formed.

3,396,196
PROCESS FOR PRESERVING AQUEOUS FORMALDEHYDE SOLUTIONS
Phillip A. Greene, Petersburg, Va., assignor to Allied Chemical Corporation, New York, N.Y., a corporation of New York
No Drawing. Filed Dec. 19, 1963, Ser. No. 331,926
8 Claims. (Cl. 260—606)

1. The method of preserving an aqueous solution of formaldehyde containing less than about 5 parts per million of free oxygen and less than 0.02% by weight of formic acid and consisting essentially of between about 37% and about 70% by weight of formaldehyde, the balance water, and preserving such solution from rapid acid build-up, which comprises maintaining said formaldehyde solution under an atmosphere of an oxygen-free gas,

inert to the solution at temperatures between about 50° C. and about 70° C.

3,396,197
HEPTAFLUOROPROPYL DIPHENYLPHOSPHINE AND THE PREPARATION THEREOF
Clay M. Sharts, San Diego, Calif., assignor to the United States of America as represented by the Secretary of the Navy
No Drawing. Filed Oct. 6, 1965, Ser. No. 493,584
2 Claims. (Cl. 260—606.5)

1. The compound $C_3F_7P(C_6H_5)_2$.

3,396,198
VINYLSULFONYLETHYL-HYDROXY ETHERS
Clark M. Welch, New Orleans, La., assignor to the United States of America as represented by the Secretary of Agriculture
No Drawing. Original application Dec. 19, 1961, Ser. No. 160,673. Divided and this application Jan. 17, 1963, Ser. No. 303,696
11 Claims. (Cl. 260—607)

1. The adduct of divinyl sulfone and a monohydric alcohol selected from the group consisting of t-butyl alcohol and n-octadecyl alcohol wherein the adduct components are present in a molecular ratio of 1:1, said adduct represented by the formula

$$R'—O—CH_2—CH_2—SO_2—CH{=}CH_2$$

wherein the R'—O— moiety is derived from the alcohol.

4. The adduct of divinyl sulfone and a polyhydric alcohol wherein the adduct components are present in a molecular ratio of 1:1, the said adduct represented by the formula

$$R—O—CH_2—CH_2—SO_2—CH{=}CH_2$$

wherein the R—O— moiety is derived from the alcohol.

3,396,199
HYDROGENOLYSIS OF REDUCIBLE SUGARS TO OBTAIN A HIGH PERCENTAGE OF GLYCEROL
Leo Kasehagen, West Chester, Pa., assignor to Atlas Chemical Industries, Inc., Wilmington, Del., a corporation of Delaware
Continuation of application Ser. No. 211,183, July 20, 1962. This application Jan. 3, 1967, Ser. No. 607,079
10 Claims. (Cl. 260—635)

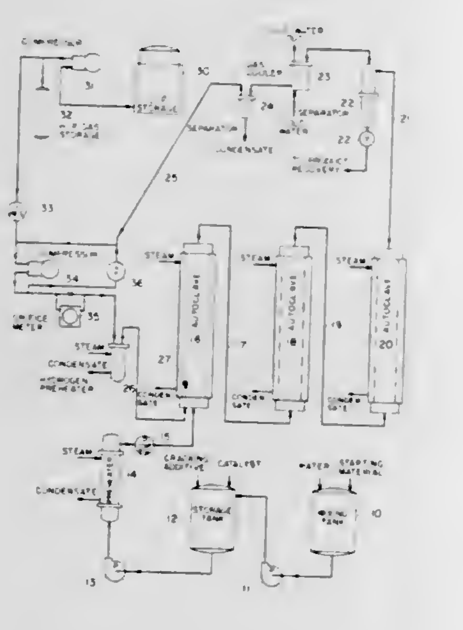

A process for the one-step continuous hydrogenolysis of reducible sugars to produce a product containing a high weight percent of glycerol is disclosed. Sugar solution and hydrogen are fed continuously to a pressure reactor in the presence of a hydrogenation catalyst and a cracking additive. The cracking additive is an alkaline earth metal oxide, hydroxide or weak acid salt in proportion to furnish from 0.25 to 1.0 weight percent of CaO equivalent based on the weight of sugar, and the catalyst is supported nickel in amount sufficient to furnish from 0.5 to 4.0% weight percent of nickel based on the weight of sugar. The reaction is conducted at a temperature of from 190° C. to 230° C. and at a pressure of at least 500 pounds per square inch.

3,396,200
PREPARATION OF 2,4,6-TRICHLORO-NITROBENZENE
Raymond S. George and Robert K. Rohwer, Los Alamos, N. Mex., assignors to the United States of America as represented by the United States Atomic Energy Commission
No Drawing. Filed June 2, 1967, Ser. No. 644,442
3 Claims. (Cl. 260—646)

A method of preparing 2,4,6-trichloronitrobenzene in which a solution of aniline in glacial acetic acid is reacted with gaseous hydrogen chloride, chlorinated in the presence of a catalyst, heated after adding sulfuric acid to remove the resulting product gas, oxidized in two steps by adding hydrogen peroxide and then nitric acid with heating, and filtering the precipitate.

3,396,201
ADDUCTS OF HEXAHALOCYCLOPENTADIENE WITH ALKADIENES
Edward D. Weil, Yonkers, N.Y., and John F. Porter, Durham, N.C., assignors to Hooker Chemical Corporation, Niagara Falls, N.Y., a corporation of New York
No Drawing. Continuation-in-part of application Ser. No. 597,853, Nov. 30, 1966. This application Nov. 22, 1967, Ser. No. 684,972
6 Claims. (Cl. 260—648)

The mono- and di-Diels-Alder adducts of hexahalocyclopentadiene with terminally double bonded alkadienes having 8 to 20 carbon atoms, are claimed as new compositions. They are useful as pesticides and fire retardant additives in polymers.

3,396,202
PROCESS FOR PREPARING 1,1,1,2-TETRACHLORO-2 - FLUOROETHANE AND 1,1,1 - TRICHLORO-2,2-DIFLUOROETHANE
Ferenc M. Pallos, El Cerrito, and Attila E. Pavlath, Berkeley, Calif., assignors to Stauffer Chemical Company, New York, N.Y., a corporation of Delaware
No Drawing. Filed Jan. 16, 1967, Ser. No. 609,318
4 Claims. (Cl. 260—653)

A process for preparing chlorofluorethane compounds such as 1,1,1,2-tetrachloro-2-fluoroethane and 1,1,1-trichloro-2,2-difluorethane by reacting $[AsCl_4]^+[AsF_6]^-$ or $[SbCl_4]^+[SbF_6]^-$ with bis (2,2,2-trichloro-1-hydroxyethyl) sulfide and collecting the chlorofluoroethane.

3,396,203
ALUMINO-SILICATE CATALYZED REACTIONS OF POLYCYCLIC AROMATIC HYDROCARBONS
Ronald D. Bushick, Glen Mills, Pa., assignor to Sun Oil Company, Philadelphia, Pa., a corporation of New Jersey
No Drawing. Filed Oct. 28, 1966, Ser. No. 590,225
16 Claims. (Cl. 260—668)

This invention relates to a method of converting symmetrical octahydrophenanthrene, also called octanthrene (hereinafter s-OHP), to its isomer, symmetrical octahydroanthracene, also called octhracine (hereinafter s-OHA), or s-OHA, to its isomer, s-OHP. This method comprises contacting a feed rich in one of the said isomers with an acidic alumino-silicate catalyst at a temperature above 80° C. but below cracking temperature, whereby isomerization of the contacted isomer to the other isomer occurs. The invention in another aspect relates to continuing said contacting until there has been produced at least one product selected from the group consisting of 1-cyclohexyl-2-phenylethane (hereinafter, sometimes, CHPE), asymmetrical octahydroanthracene (hereinafter a-OHA), asymmetrical octahydrophenanthrene (hereinafter a-OHP), 1,2,3,4-tetrahydroanthracene (hereinafter THA), 1,2,3,4 - tetrahydrophenanthrene (hereinafter THP), anthracene, and phenanthrene.

3,396,204
HYDROBROMINATION OF OLEFINS IN A THIN TURBULENT FILM
Charles B. McCarty and Kenneth W. Theile, Cincinnati, Ohio, assignors to The Procter & Gamble Company, Cincinnati, Ohio, a corporation of Ohio
Continuation-in-part of application Ser. No. 333,425, Dec. 26, 1963. This application Feb. 4, 1965, Ser. No. 432,070
7 Claims. (Cl. 260—663)

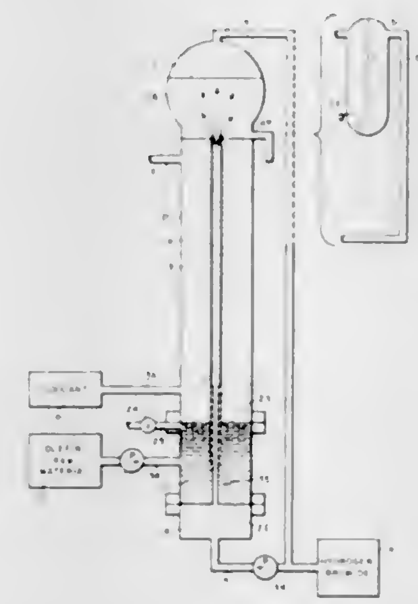

1. A process for reacting hydrogen bromide and a liquid alpha olefin containing from about 5 to about 30 carbon atoms in the presence of a free radical initiator to form primary aliphatic bromides which comprises the steps of:

contacting said liquid alpha olefin with a driving stream of hydrogen bromide gas to form a reaction mixture comprising said liquid alpha olefin and hydrogen bromide, the velocity of said hydrogen bromide gas stream being sufficient to establish an annular flow of a thin turbulent film of said reaction mixture within an unpacked tubular reactor which is in communication with said liquid alpha olefin and an inlet means for introducing said hydrogen bromide gas stream, said tubular reactor constituting a reaction zone extending beyond the inlet means for adding the hydrogen bromide gas, said flow of annular film being maintained in said reaction zone as a film having a thickness in the range of from about .001 inch to about .02 inch;

reacting said alpha olefin and said hydrogen bromide in said annular film within said reaction zone in the presence of a free radical initiator for from about 2 seconds to about 8 minutes at a temperature in the range of from about 20° F. to about 120° F. to form a primary aliphatic bromide reaction product; and recovering said reaction product.

3,396,205
DEHYDROGENATION CATALYSTS CONTAINING BISMUTH COMPOUNDS AND CALCIUM NICKEL PHOSPHATE
Douglas Sadler Alexander, Harvey Minnis, and Brian H. Oliver, Sarnia, Ontario, Canada, assignors to Polymer Corporation Limited, Sarnia, Ontario, Canada, a body corporate
No Drawing. Filed May 13, 1965, Ser. No. 455,599
Claims priority, application Canada, May 20, 1964, 903,079
21 Claims. (Cl. 260—680)

A catalyst for the dehydrogenation of hydrocarbon feeds, at elevated temperatures and optionally in presence of oxygen, comprising at least one inorganic bismuth compound supported on a calcium nickel phosphate having a macroporous structure.

3,396,206
HIGH TEMPERATURE METHOD FOR PRODUCING STYRENE AND ETHYLBENZENE
Eric J. Y. Scott, Princeton, N.J., assignor to Mobil Oil Corporation, a corporation of New York
No Drawing. Filed Sept. 30, 1966, Ser. No. 583,449
4 Claims. (Cl. 260—669)

Styrene and ethylbenzene are prepared by pyrolyzing a mixture of toluene and an alkane having 1, 3 or 4 carbon atoms; reaction conditions include a mole ratio of alkane to toluene of at least 2:1, temperature in the range of 1000–1200° C., and exposure of reactants to the aforesaid temperature for a period of up to 3 milliseconds.

3,396,207
PRODUCTION OF ACETYLENE BY THERMAL CRACKING OF HYDROCARBONS
Ernst Bartholomé, Heidelberg, Erwin Lehrer, Bad Duerkheim, and Friedrich Wilhelm Schierwater, Ludwigshafen (Rhine), Germany, assignors to Badische Anilin- & Soda-Fabrik Aktiengesellschaft, Ludwigshafen (Rhine), Germany
Continuation-in-part of application Ser. No. 748,809, July 16, 1958. This application Mar. 14, 1961, Ser. No. 95,678
Claims priority, application Germany, Aug. 3, 1957, B 45,565
2 Claims. (Cl. 260—679)

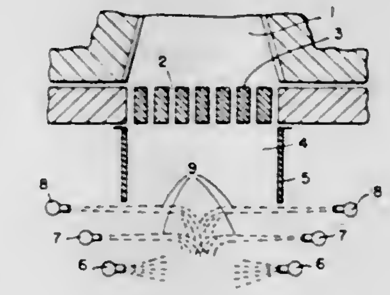

1. An improvement in a process for the production of acetylene by the thermal cracking of hydrocarbons wherein said acetylene is rapidly cooled in a quench zone which comprises: passing a current of said acetylene from a cracking zone into said quench zone, and thereafter cooling said acetylene by injecting a plurality of compact jets of liquid into said current, said jets of liquid being supplied laterally to said current of acetylene under varying pressure heads to insure that substantially an entire cross-section of the current is contacted by said liquid, whereby said jets of liquid are split up into fine droplets by the current and the acetylene is thereby rapidly cooled the dynamic pressure p_D of the gas stream, the depth of penetration a of the water into the gas stream, the diameter d of the jets, and the water pressure p_W prior to the outlet

openings being selected so that the numerical values of $(p_W:p_D)\cdot(d:a)$ lie between 1 and 15.

3,396,208
HIGH TEMPERATURE METHYLATION OF OLEFINS
Eric J. Y. Scott, Princeton, N.J., assignor to Mobil Oil Corporation, a corporation of New York
No Drawing. Filed Sept. 16, 1966, Ser. No. 579,835
6 Claims. (Cl. 260—683)

Propylene and isobutylene are methylated to form a linear 1-olefin having 4 or 5 carbon atoms, respectively, by contacting them with a C_1, C_3 or C_4 alkane at 1000–1200° C. for 1–2 milliseconds, and rapidly cooling the resulting reaction mixture.

3,396,209
AIR DRYING ETHERS OF MONOHYDRIC POLYALLYL ETHERS AND COPOLYMER CONTAINING ALKOXYALKYLATED AMINOTRIAZINE TRANSESTERS
Kazys Sekmakas and Frank Ragas, Chicago, Ill., assignors to De Soto, Inc., a corporation of Delaware
No Drawing. Filed Sept. 28, 1965, Ser. No. 491,049
6 Claims. (Cl. 260—856)

An essentially monomeric substantially completely alkoxyalkylated aminotriazine, such as hexamethoxy methyl melamine, is transesterified with a monoethylenically unsaturated carboxylic acid, such as maleic or fumaric acid, to form an unsaturated transester which is copolymerized with other unsaturated material and then reacted with a monohydric polyallyl ether, such as trimethylol propane diallyl ether, to form an air drying ether derivative.

3,396,210
COMPOSITIONS MADE FROM: (A) ISOCYANATE-TERMINATED PREPOLYMERS; AND (B) POLYESTERS PREPARED FROM POLYOLS AND α,β-ETHYLENICALLY UNSATURATED MONOCARBOXYLIC ACIDS
William J. McKillip, Minneapolis, and Clarence N. Impola, Prior Lake, Minn., assignors to Ashland Oil & Refining Company, Ashland, Ky., a corporation of Kentucky
No Drawing. Filed Sept. 20, 1965, Ser. No. 488,732
11 Claims. (Cl. 260—859)

Preparation of polyurethanes from (a) isocyanate-terminated prepolymers, and (b) polyesters prepared from polyols and α,β-ethylenically unsaturated monocarboxylic acids. A coating composition (e.g., a varnish) containing both a moisture curable isocyanate-terminated prepolymer and trimethylol propane trimethacrylate.

3,396,211
COMPOSITIONS OF POLYVINYL CHLORIDE AND RANDOMLY CHLORINATED POLYETHYLENE
Sergio Bonotto, Princeton, and Eric R. Wagner, Basking Ridge, N.J., assignors to Union Carbide Corporation, a corporation of New York
No Drawing. Continuation of application Ser. No. 354,444, Mar. 24, 1964. This application July 28, 1967, Ser. No. 656,945
1 Claim. (Cl. 260—897)

A vinyl chloride composition of improved impact strength comprising a vinyl chloride polymer and polyethylene randomly chlorinated in particle form at temperatures ranging from 20° C. to 75° C.

3,396,212
O,O-DILOWERALKYL S-[1-LOWERALKOXY CARBONYL - 2 - (N - LOWERALKOXY CARBONYL-N - LOWERALKYL CARBONYL)-ETHYL]PHOSPHORODITHIOATES
Michihiko Sakai, Kyoto, Kazuo Konishi, Suita, and Masayuki Kato, Kyoto, Japan, assignors to Takeda Chemical Industries, Ltd., Osaka, Japan
No Drawing. Filed Dec. 3, 1965, Ser. No. 511,366
Claims priority, application Japan, Dec. 7, 1964, 39/69,039
15 Claims. (Cl. 260—938)

1. A compound of the formula:

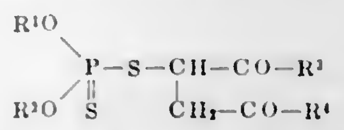

wherein each of R^1 and R^2 is lower alkyl, one of R^3 and R^4 is lower alkoxy and the other is an

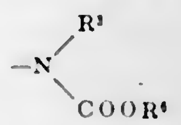

radical wherein R^5 is a member selected from the group consisting of H and lower alkyl, and R^6 is lower alkyl.

3,396,213
PREPARATION OF (MONOCYCLIC ARYL)METHYL, ALPHA, ALPHA - DITHIOL - BIS(O,O - DIALKYLPHOSPHORODITHIOATE)
Donald W. Stoutamire, Modesto, Calif., assignor to Shell Oil Company, New York, N.Y., a corporation of Delaware
No Drawing. Filed Feb. 24, 1964, Ser. No. 347,013
4 Claims. (Cl. 260—978)

Preparation of a (monocyclic aryl)methyl-alpha,alpha-dithiol-bis(O,O-dialkylphosphorodithioate), by reacting a dialkyl dithiophosphoric acid with an acylal of a monocyclic aromatic aldehyde in the presence of a catalytic amount of sulfuric acid having a strength of 75% to 100% by weight sulfuric acid at a temperature between about 25° C. and about 100° C.

3,396,214
METHOD OF MAKING OPTICAL ELEMENTS USING ULTRASONIC VIBRATION
Harry D. Crandon, Woodstock, Conn., assignor to American Optical Company, Southbridge, Mass., a voluntary association of Massachusetts
Filed Feb. 2, 1965, Ser. No. 429,725
6 Claims. (Cl. 264—1)

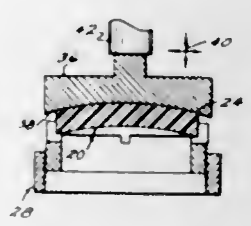

A method for producing optically finished surfaces on optical components such as lenses, mirrors, prisms and the like with ultrasonic vibration. A master member formed of material having a higher melting temperature than that of the surface of a workpiece to be optically finished is provided with a working surface of precisely the shape and surface finish desired to be produced on the workpiece. The working surface of the master member is pressed against the workpiece and ultrasonically vibrated until the surface of the workpiece assumes precisely the shape and character of finish of the working surface of the master member. The invention contemplates similar working of coated article surfaces with induced fusion of the coatings to the articles and also the transferring of surfacing materials from the master member to workpieces with simultaneous finishing and fusion of the surfacing material to the workpieces.

3,396,215
PROCESS FOR THE PREPARATION OF A PROPELLANT GRAIN
Earl J. Hittinger, Danville, Ill., assignor to Standard Oil Company, Chicago, Ill., a corporation of Indiana
No Drawing. Filed Dec. 29, 1965, Ser. No. 517,473
5 Claims. (Cl. 264—3)

Process for the preparation of a propellant composition or grain having an oxidizer and a combustible thermoplastic material comprising the steps of dry mixing the ingredients and then heating the mixture to its softening point.

3,396,216
PROCESS FOR STRETCHING POLYPROPYLENE FILM
Hirosuke Yumoto, Kazuya Harada, and Masaaki Itoga, Mishima-shi, Japan, assignors to Toyo Rayon Kabushiki Kaisha, Tokyo, Japan
Continuation of abandoned application Ser. No. 269,368, Apr. 1, 1963. This application July 11, 1966, Ser. No. 565,358
Claims priority, application Japan, Apr. 14, 1962, 37/14,989, 37/14,990; May 18, 1962, 37/19,704
2 Claims. (Cl. 264—25)

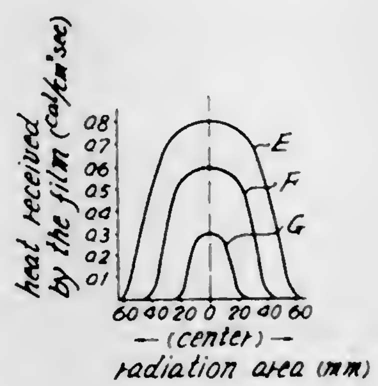

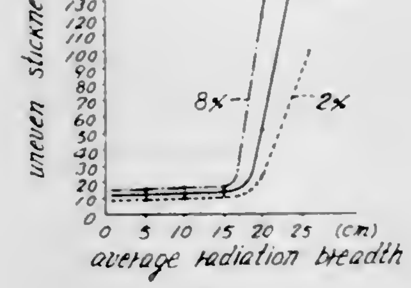

A process for stretching polypropylene film in a transverse direction which includes subjecting it to a diagonally disposed localized irradiation restricted to a radiation area having an average radiation breadth of about 10–200 mm. The average temperature of the film inside the radiation area is at least about 7° C. higher than the average temperature of the film prior to entering the radiation area.

3,396,217
METHOD OF FORMING AND FIRING A CERAMIC MASS
Harley Banner Foster, 102 Elmwood Terrace, Greensboro, N.C. 27408
No Drawing. Continuation-in-part of application Ser. No. 620,281, May 3, 1967, which is a continuation-in-part of application Ser. No. 413,360, Nov. 23, 1964, which is a continuation-in-part of application Ser. No. 213,114, July 30, 1962; said application Ser. No. 620,281 is also a continuation-in-part of application Ser. No. 490,080, Sept. 24, 1965. This application Oct. 25, 1967, Ser. No. 677,883
13 Claims. (Cl. 264—27)

A three component essentially ceramic body wherein one component is a granular non-plastic ceramic material composed of a refractory phase matter whose Pyrometric Cone Equivalent (PCE) is greater than a second binder phase component. The PCE of the binder phase material falls within the inclusive range of 021 to 08. A third component need not be ceramic but is of such particle size distribution and electrical character that it will carry electrical energy through the composite three component mixture. The three components are mixed with a liquid and the resulting wet mixture is cast into a mold. Loose insulating material, e.g. soil, the PCE of which is greater than the binder phase component may be distributed over the ware. Electrical current is then caused to flow through the composite ware mixture essentially following random conductive paths formed by the third component. As a result, a pyrochemical reaction takes place by converting the electrical energy into thermal energy by means of the inherent resistivity of the third component particles and thus achieving the PCE of the binder phase component.

The third component can be replaced with metal rods or mesh material permanently disposed in a mixture of refractory and binder phase component. Electrical current is then passed through these rods or mesh like material with the resulting conversion of electrical to thermal energy. Upon achieving the PCE of the binder phase component by this thermal energy, the composite unitary piece of ware including the rods or metal mesh is cooled and then put into its intended service.

3,396,218
METHOD OF SECURING HEATING ELEMENTS TO CEILINGS AND WALLS
Angelo F. Despota, Chicago, David D. Pipkins, Rockford, and William W. Henkel, Wheaton, Ill., assignors to The Valspar Corporation, Rockford, Ill., a corporation of Delaware
Filed Apr. 9, 1965, Ser. No. 446,991
4 Claims. (Cl. 264—35)

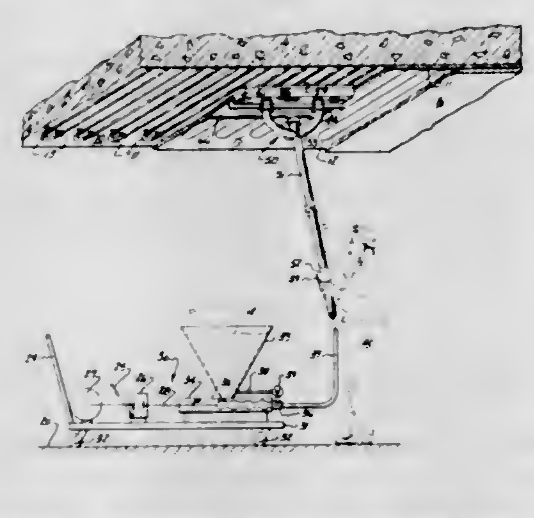

Temporarily securing runs of electrical heating wires to a building surface; extruding a ready-mix joint compound through an applicator; guiding the applicator along the wires and filling the void therebetween to adhesively secure the wires to the surface; and applying a second coat over the first.

3,396,219
MEASURING SYSTEM
Gerald T. Sutterfield, Park Forest, Ill., and Edward J. Amberg, Jr., Beverly Shores, Ind., assignors to Industrial Nucleonics Corporation, a corporation of Ohio
Continuation of application Ser. No. 448,995, Apr. 19, 1965. This application Mar. 16, 1967, Ser. No. 623,776
18 Claims. (Cl. 264—40)

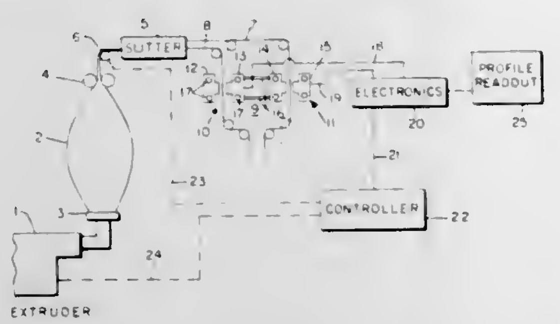

The gauge system and method described herein provides for the presentation of a continuous, visual trace of the profile across adjacent sections of a product. In one embodiment, separate gauges measure the thickness of these sections and the gauge signals are processed to read out sequentially on a recorder. The profile of a blown film bubble can be obtained from scanning separate sections of the slit bubble after they are flattened. Several types of presentations can be used, such as a X-Y recorder, circular chart recorder, or strip chart recorder. The system and method descibed further provides, in embodiment, for the adjustment of the product thickness in the machine direction by combining the signals from the gauges to obtain our average thickness for the two sections, and controlling the machine direction thickness in response to the average thickness.

3,396,220
MANUFACTURE OF CERAMIC ARTICLES
George Garside Dewsnap, Southport, Ambrose George, Salford, and Leonard Heathcote, Eccles, England, assignors, by mesne assignments, to Secretary of State for Defense in the Government of the United Kingdom of Great Britain and Northern Ireland
No Drawing. Filed May 25, 1962, Ser. No. 198,688
Claims priority, application Great Britain, May 26, 1961, 19,069/61
2 Claims. (Cl. 264—65)

1. A process for the manufacture of thin-walled ceramic radomes comprising, flame spraying a graphite form with alumina of at least 98% purity, firing on the form the alumina shell to prevent excessive shrinkage in a reducing atmosphere at approximately 1700° C., reducing the temperature to approximately 1550° C. to permit the shell to harden sufficiently to be self-sustaining, burning the form out completely by introducing aprproximately six percent oxygen while continuing the heating at the reduced temperature whereby the supported shell is sintered and the form removed in a single firing operation to produce a finished radome having a shrinkage from the desired dimensions not in excess of 1½%.

3,396,221
METHODS FOR THE VULCANIZING OF PREFORMED TIRES
Walter Balle, Frankfurt am Main, and Paul Musch, Bergen-Enkheim, Germany, assignors to Firma Leonh. Herbert Maschinenfabrik, Bergen-Enkheim, Germany, a German body corporate
Filed Jan. 29, 1965, Ser. No. 429,097
Claims priority, application Germany, Jan. 30, 1964, H 51,533
5 Claims. (Cl. 264—315)

1. A method of the treatment of a preformed unfinished tire in a vulcanizing press with a divided mold as half molds with rim seats for the profiling of the running surface of the tire and the press having a heating tube fastened to two support plates, and a centering member, comprising applying a tire between two half molds into a position coaxial with the molds by aligning and engaging the running surface of the tire with the centering member and simultaneously centering it and holding tire

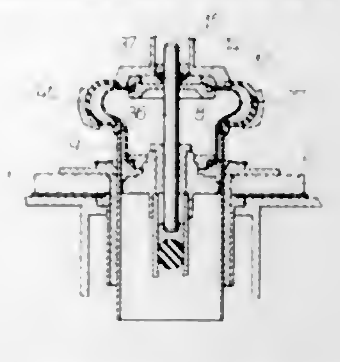

in said position, and placing two tire rim seats of the mold which are movable independently of the half molds on the tire rims, and applying an inflation tube partially in a stretched condition into the tire held by the centering member and the rim seats and subsequently inserted by applying the two support plates to each other on to the tire.

3,396,222
DECALCIFICATION OF BONES
Archie B. Blackburn, Lake Jackson, Tex., assignor to The Dow Chemical Company, Midland, Mich., a corporation of Delaware
No Drawing. Filed Feb. 3, 1965, Ser. No. 430,179
5 Claims. (Cl. 424—3)

1. A method of decalcifying a bone specimen which comprises:

(a) contacting said bone specimen with an extracting solution containing a compound of the formula

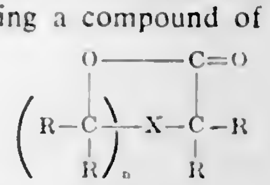

wherein

(1) n is an integer of from 0 to 3,

(2) X is selected from the group consisting of the oxygen atom and the divalent group

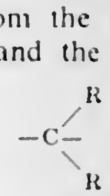

(3) each R is a group of the formula $(C_kH_{2k})H$ in which k is an integer of from 0 to 4, and

(4) n is greater than zero when X is oxygen, and the hydrolysis products thereof, to form soluble calcium salts by extraction of the calcium within the bone specimen, and

(b) separating the decalcified bone specimen of (a) from the solubilized calcium salts.

3,396,223
INSECTICIDAL COMPOSITION CONSISTING OF TECHNICAL GRADE MALATHION AS A CARRIER HAVING DISSOLVED THEREIN CERTAIN OTHER MALATHION - SOLUBLE TECHNICAL GRADE SYNTHETIC ORGANIC INSECTICIDES
Frank Louis Stark, Jr., Princeton, N.J., assignor to American Cyanamid Company, Stamford, Conn., a corporation of Maine
No Drawing. Continuation-in-part of application Ser. No. 504,135, Oct. 23, 1965. This application Sept. 21, 1966, Ser. No. 580,857
9 Claims. (Cl. 424—200)

There is provided an improved over-all technical grade insecticidal composition of extended residual life consisting essentially of from about 25% to about 95% by weight of technical grade malathion and from about 5% to about 75% of technical grade malathion-soluble phosphate, thiophosphate, carbamate or chlorinated hydrocarbon insecticides.

3,396,224
CONTROLLING PHYTOPATHOGENIC FUNGI ON PLANTS WITH 3-PYRIDYL METHANE DERIVATIVES
Earle M. Van Heyningen, Indianapolis, Ind., assignor to Eli Lilly and Company, Indianapolis, Ind., a corporation of Indiana
No Drawing. Filed Sept. 9, 1965, Ser. No. 486,193
8 Claims. (Cl. 424—263)

1. A method for protecting plants from attack by phytopathogenic fungi which comprises contacting a fungus-susceptible plant with a fungicidal amount of a substance having one of the following formulas:

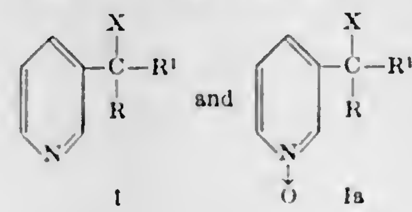

I and Ia

wherein

X is hydroxyl, halogen, amino, acetoxy, lower alkoxy or lower alkyl mercapto;

R^1 is

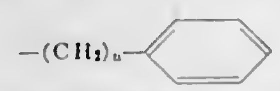

pyridyl, thienyl, naphthylmethyl, or C_3-C_6 cycloalkyl;

R is

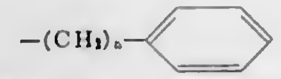

pyridyl, thienyl, naphthylmethyl, C_3-C_6 cycloalkyl, lower alkyl, lower alkynyl, lower alkenyl, or trifluoromethyl; n is 0, 1, 2, or 3; and the acid addition salts thereof.

3,396,225
INSECTICIDAL USE OF EXO,EXO-4,8-DICHLORO-2-THIATRICYCLO[3.2.1.0^{3,7}]OCTANE 2,2-DIOXIDE
Thomas A. Magee, Mentor, Ohio, assignor to Diamond Shamrock Corporation, a corporation of Delaware
No Drawing. Filed Apr. 3, 1967, Ser. No. 627,869
3 Claims. (Cl. 424—275)

Insecticidal activity of the compound exo,exo-4,8-dichloro-2-thiatricyclo[3.2.1.0^{3,7}]octane 2,2-dioxide, is disclosed.

3,396,226
NONGRANULATED COMPRESSED TABLETS OF ASCORBIC ACID WITH MICROCRYSTALLINE CELLULOSE
Arnold Cavalli, Belleville, and Louis Magid, Clifton, N.J., assignors to Hoffmann-La Roche Inc., Nutley, N.J., a corporation of New Jersey
No Drawing. Filed Jan. 6, 1965, Ser. No. 423,825
5 Claims. (Cl. 424—280)

Compositions suitable for direct compression into tablets without prior granulation procedures and containing ascorbic acid having average particle sizes such that not more than about 60 percent of the weight thereof is retained on a 100 mesh screen, and at least about 30 percent of the weight thereof passes through a 200 mesh screen, microcrystalline cellulose and/or cornstarch having a high amylose content and a suitable lubricant or lubricant mixture, are disclosed along with methods of producing such tablets.

3,396,227
METHOD OF CONTROLLING INSECT PESTS WITH DIHYDRIC FLUOROALCOHOLS
Everett E. Gilbert, Morristown, N.J., assignor to Allied Chemical Corporation, New York, N.Y., a corporation of New York
No Drawing. Filed Aug. 11, 1965, Ser. No. 478,984
11 Claims. (Cl. 424—343)

1. The method for controlling soil-infesting nematodes, mites, house flies and other insect pests which comprises contacting such pests with a toxic amount of a compound selected from the group consisting of (1) compounds of the formula

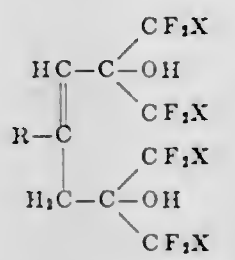

wherein R is a member selected from the group consisting of phenyl and lower alkyl groups of 1 to 3 carbon atoms, and X is a member selected from the group consisting of fluorine and chlorine and (2) mono- and dialkali metal and mono- and diammonium salts of the compounds of the said formula wherein all the X substituents are fluorine.

ELECTRICAL

3,396,228
ELECTROMAGNETIC STIRRER
Gösta Karlsson and Kåre Folgerö, Vasteras, Sweden, assignors to Allmanna Svenska Elektriska Aktiebolaget, Vasteras, Sweden, a corporation of Sweden
Filed Aug. 2, 1965, Ser. No. 476,578
4 Claims. (Cl. 13—26)

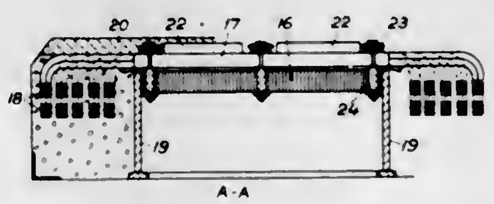

An electromagnetic stirrer for metallurgical furnaces polyphase coils, the different windings of which are arranged on a laminated core, has a mass with the permeability of about the permeability of air enclosing the outer ends of said windings. Said mass comprises filling material and a binding agent, the filling material being sand or ceramic material and the binding agent being a plastic material, the filling and binding agents being mixed together. A cover of a ceramic material covers the stirrer coils and adjacent parts.

3,396,229
DEVICE FOR INDUCTIVE HEATING AND/OR STIRRING
Yngve Sundberg, Vasteras, Sweden, assignor to Allmänna Svenska Elektriska Aktiebolaget, Vasteras, Sweden, a corporation of Sweden
Filed June 7, 1965, Ser. No. 461,921
Claims priority, application Sweden, June 22, 1964, 7,563/64
4 Claims. (Cl. 13—27)

A ladle is surrounded by a metallic casing, outside of which are positioned coils which are fed with current of a frequency of 0.1 to 10 cycles; the coils may be alternatively fed with single-phase current for heating or multi-

phase current for stirring. The ratio of the thickness of the casing (Δ) to the depth of penetration of the eddy

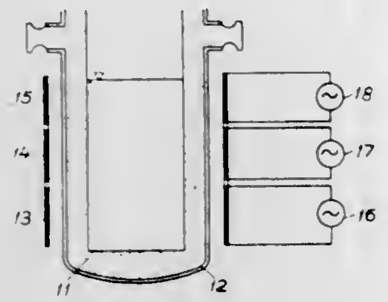

current induced by the coil flux (δ) is

$$\sqrt{\frac{2\cdot\rho}{w\cdot\mu_0}}$$

where ρ is the resistivity, w is an angular frequency ($=2\pi$ times the frequency) and μ_0 is the permeability in air.

3,396,230
LAMINATED BUS ASSEMBLIES
David J. Crimmins, Pennington, N.J., assignor to The Thomas & Betts Co., Elizabeth, N.J., a corporation of New Jersey
Filed July 6, 1966, Ser. No. 563,128
8 Claims. (Cl. 174—72)

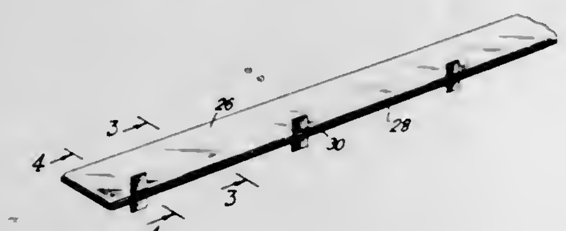

A laminated bus assembly in which there is a seam along only one longitudinal edge of the assembly. The laminated bus assembly comprises at least one conducting plate and a sheet of insulating material folded about said plate, and sealed at its joined edges to form a single bonded seam along only one longitudinal edge of the plate. Preferably, the conducting plate has at least one tab protruding externally of said insulating material.

3,396,231
STRESS GRADED CABLE TERMINATION
Harry C. Anderson, Stratford, Conn., assignor to General Electric Company, a corporation of New York
Filed Jan. 18, 1967, Ser. No. 610,113
21 Claims. (Cl. 174—73)

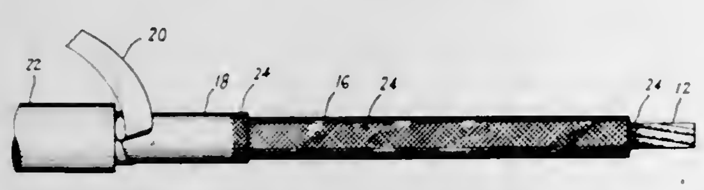

Electric cable terminating means for substantially inhibiting ionization at the termini in which a semi-conductive coating is applied onto the insulation layer for a predetermined length from the high voltage output end to establish electrical contact with the shielding means. The coating has a predetermined resistance per square sufficient so that the electrical stress at the surface for said length does not exceed the ionization start level of the cable.

3,396,232
INTERROGATING SYSTEM FOR SUBSCRIPTION TELEVISION RECEIVERS
Melvin C. Hendrickson, Elmhurst, and George V. Morris, Norridge, Ill., assignors to Zenith Radio Corporation, Chicago, Ill., a corporation of Delaware
Filed July 1, 1964, Ser. No. 379,690
30 Claims. (Cl. 178—5.1)

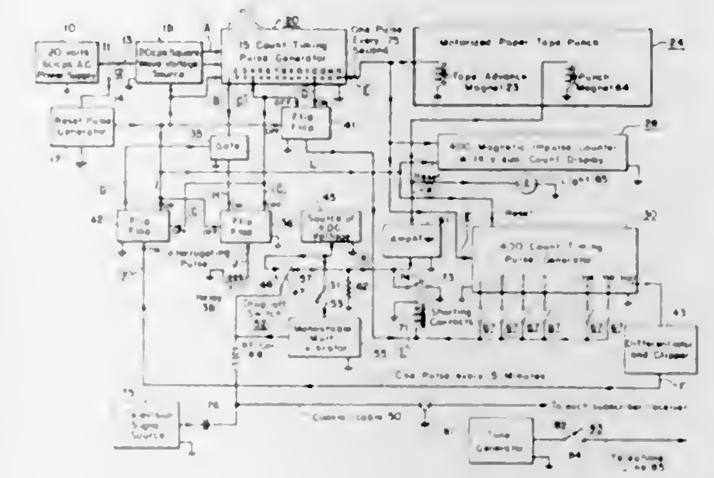

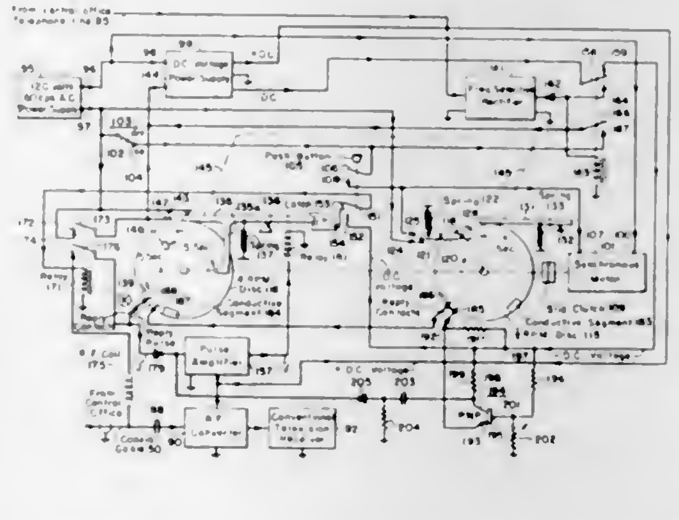

A plurality of subscription television receivers are sequentially examined from a central office to determine those that have been tuned to reproduce a subscription television program. Each receiver includes a timing mechanism which advances, when the receiver is appropriately adjusted to utilize the program signal, from a reference condition to a starting condition. In response to an interrogating signal, subsequently received from the central office, the timing mechanism is advanced from its starting condition and through each one of a series of different conditions in time sequence. When the timing mechanism at each receiver reaches a preassigned condition, unique to the receiver, a reply signal is transmitted back to the central office with a time separation from the interrogating signal which is unique to the receiver.

3,396,233
HIGH-VOLTAGE SWITCHING FOR TWO-COLOR LINE-SEQUENTIAL COLOR TELEVISION
Sholly Kagan, Natick, Mass., assignor to Polaroid Corporation, Cambridge, Mass., a corporation of Delaware
Filed Feb. 7, 1966, Ser. No. 525,497
23 Claims. (Cl. 178—5.4)

In an accelerating high-voltage dependent two-color

television receiver there is incorporated a synchronizing signal responsive resonant circuit means to alternately

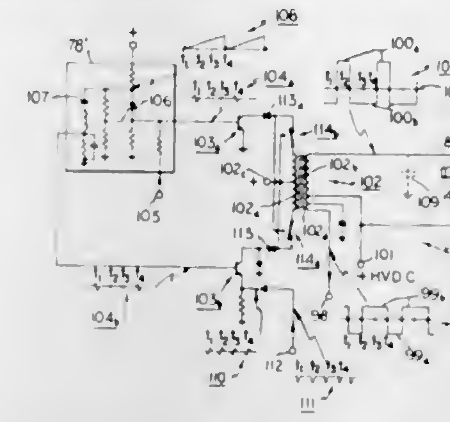

produce nonsymmetrical high voltage pulses for color alternation.

3,396,234
APPARATUS FOR PERFORATING A LAYER IN A MASTER
Karl G. Zeuthen, Gentofte, and Svend E. Larsson, Copenhagen, Denmark, assignors to Zeuthen & Aagaard A/S., Glostrup, Denmark, a company of Denmark
Filed Feb. 1, 1965, Ser. No. 429,383
Claims priority, application Denmark, Feb. 5, 1964, 562/64
20 Claims. (Cl. 178—6.6)

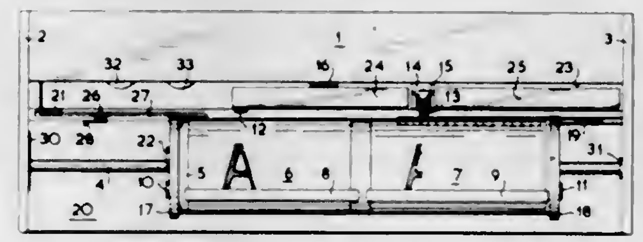

An apparatus for perforating a master copy from an original and comprising a drum rotatably mounted on a dismountable fixed shaft. The curved surface of the drum includes means for mounting the master copy and original thereon. A fixed optical system, including a light source, a photosensitive element and amplifier, is positioned to scan the original as the drum is rotated. Fixed perforating means responsive to the output of the optical system perforates the master copy. Driving means engage the periphery of the drum to both rotate it and move it axially as it rotates.

3,396,235
XEROGRAPHIC FACSIMILE PRINTER HAVING LIGHT SCANNING AND ELECTRICAL CHARGING
Peter A. Button, Arcadia, and Jack V. Miller, Azusa, Calif., and Paul F. King, Webster, N.Y., assignors to Xerox Corporation, Rochester, N.Y., a corporation of New York
Continuation of application Ser. No. 307,552, Sept. 9, 1963. This application Dec. 2, 1966, Ser. No. 598,879
16 Claims. (Cl. 178—6.6)

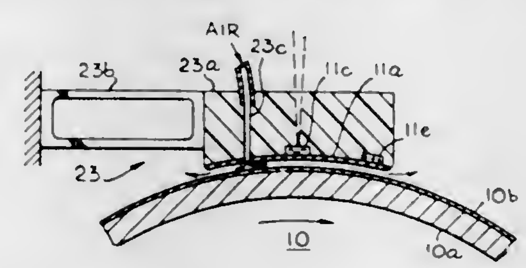

A method of and apparatus for recording electrotemporal information as an electrostatic image on a photoconductor is disclosed. An inductive electrode is utilized to impress a time-varying electric field across the photoconductor while actinic electromagnetic radiation switches the photoconductor from non-conductive to conductive and back to non-conductive status to trap a charge proportional to the varying-intensity electric field on its surface.

3,396,236
AUTOMATIC BLACK-LEVEL CONTROL CIRCUIT
Herbert R. Foster, New Brighton, N.Y., assignor to Fairchild Camera and Instrument Corporation, a corporation of Delaware
Filed June 7, 1965, Ser. No. 461,707
6 Claims. (Cl. 178—7.1)

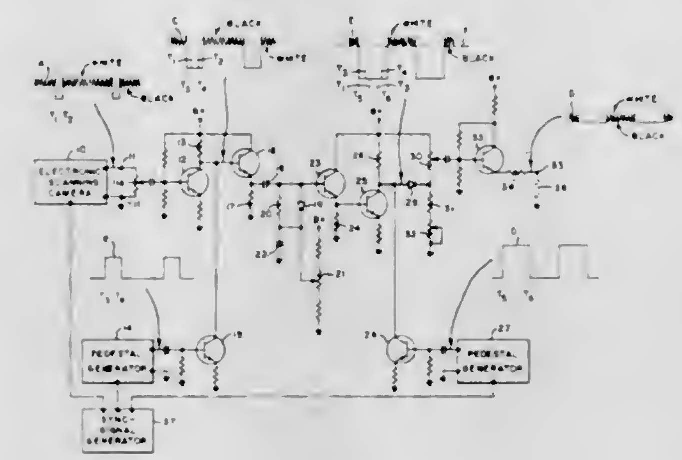

1. An automatic black-level control circuit for an electronic scanning camera developing a positive video signal comprising:
- an input circuit for supplying a camera-developed video signal;
- means for inverting the polarity of an input signal;
- means for stabilizing the inverted signal on its peak black level;
- means for inverting the polarity of the stabilized signal;
- and an output circuit coupled to said inverting means.

3,396,237
HORIZONTAL SWEEP CIRCUIT
Harold J. Benzuly, Highland Park, Ill., assignor to Warwick Electronics Inc., a corporation of Delaware
Filed Sept. 21, 1964, Ser. No. 397,834
11 Claims. (Cl. 178—7.3)

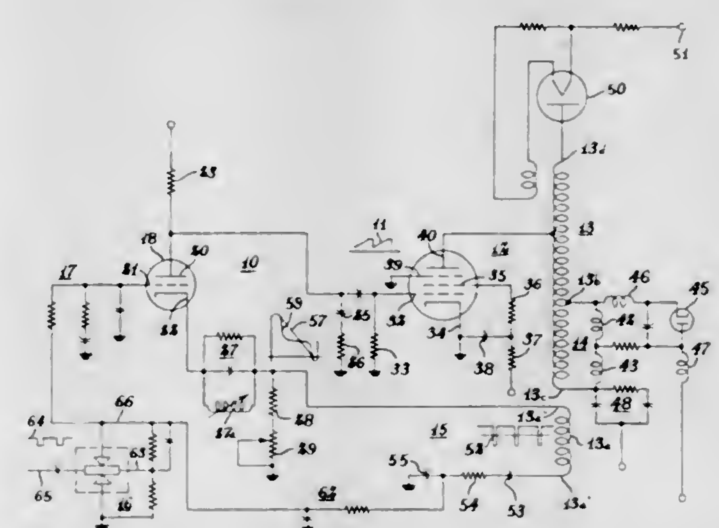

A horizontal sweep circuit utilizing a triode blocking oscillator and a power output stage with a feedback trigger signal from the output stage to the cathode of the oscillator. The grid of the oscillator provides a high impedance input for an AFC control.

3,396,238
AUTOMATIC RADIO TRANSMITTING DEVICES
John R. Davy, Allan McKillop, and Eric B. Brash, Anniesland, Glasgow, Scotland, assignors to Barr and Stroud Limited, Anniesland, Glasgow, Scotland
Filed Mar. 26, 1964, Ser. No. 355,003
Claims priority, application Great Britain, Mar. 26, 1963, 11,841/63
4 Claims. (Cl. 178—26)

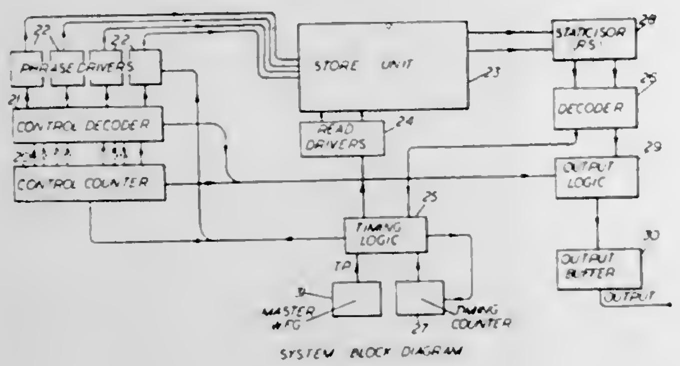

Radio transmitting apparatus for automatically transmitting a predetermined message, wherein the message is stored in binary form, and is read out and converted to morse code for transmission in morse code form, in a selected time sequence.

3,396,239
SIGNAL CONVERTING SYSTEM FOR START-STOP TELEGRAPH SIGNALS
Kakuro Yamauchi, Setagaya-ku, Tokyo-to, Japan, assignor to Kokusai Denshin Denwa Kabushiki Kaisha, Tokyo-to, Japan, a Japanese joint-stock company
Filed May 19, 1964, Ser. No. 368,588
Claims priority, application Japan, May 21, 1963, 38/25,447; Sept. 11, 1963, 38/47,964
6 Claims. (Cl. 178—26)

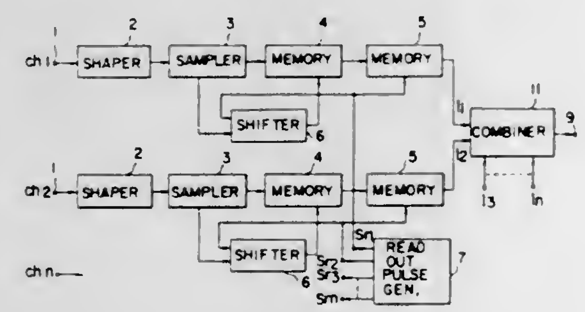

A system is provided for conversion of telegraph signals having redundant elements to those of isochronous binary type, wherein at least two-bit storage for data including redundancy bits is provided and controlled so as to read out such bits in the successive order stored at some isochronous period, the memory means sending out the last stored binary bit when a new bit for transmission is not received in storage. Means are described for multiplexing the data from a plurality of sources of such start-stop telegraph signals.

3,396,240
DATA CHANNEL MONITOR
Charles R. Abbey, Harry H. Pursel, and Don L. Scidmore, Seattle, Wash., assignors to Honeywell Inc., a corporation of Delaware
Filed Sept. 28, 1964, Ser. No. 399,683
10 Claims. (Cl. 178—69)

A monitor circuit for use in conjunction with a data handling system for monitoring a transmission link thereof to provide an indication of the operability of the transmission link. The system utilizes a coded signal in combination with the data and the coded signal is detected at

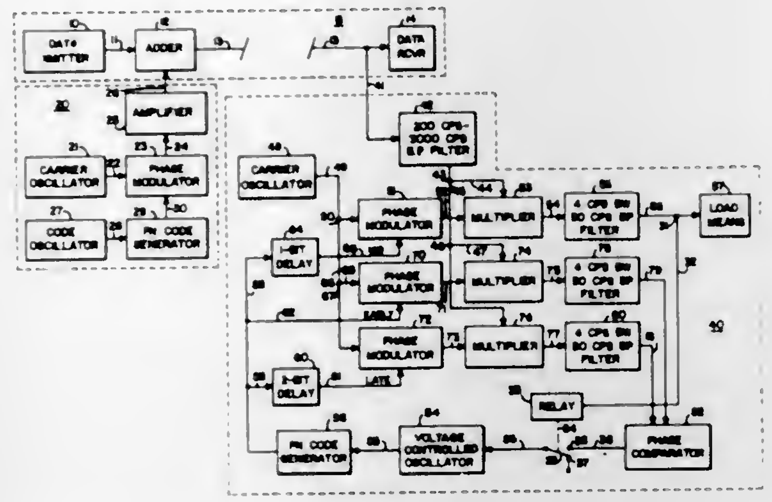

the end of the transmission link by a synchronous type detection system which utilizes the same coded signal in its detection function.

3,396,241
STETHOSCOPE WITH SOUND SPECTRUM SELECTION
Russell K. Anderson, P.O. Box 197 07075, and Lloyd C. Sanford, 202 Woodland Ave. 07070, both of Rutherford, N.J.
Filed Oct. 23, 1964, Ser. No. 406,088
10 Claims. (Cl. 179—1)

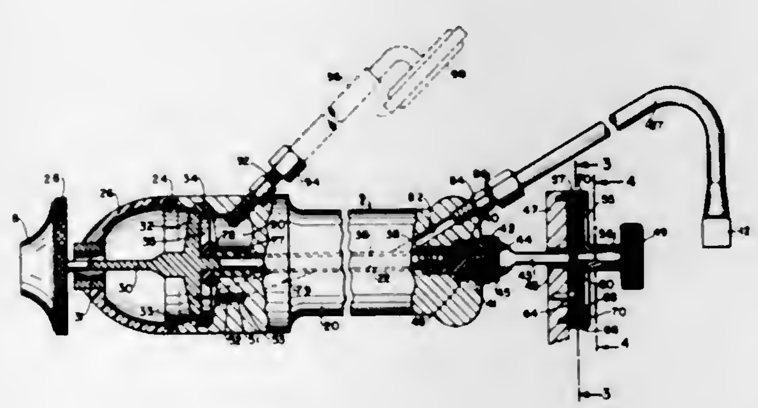

In a stethoscope for detecting a narrow band of audio frequencies, sound is converted to electrical signals, amplified and reconverted to sound at the input of a tunable cavity type filter. The acoustical output of the filter is sensed, amplified, and again converted to sound. A set of meters is provided to compare filter input with filter output.

3,396,242
SELECTION CIRCUIT HAVING MAGNETIC CORE MATRIX MEANS
Friedrich Ulrich, Stuttgart-Weilimdorf, and Bernhard Villinger, Stuttgart, Germany, assignors to International Standard Electric Corporation
Filed Oct. 6, 1965, Ser. No. 493,448
Claims priority, application Germany, Oct. 9, 1964, St 22,797
4 Claims. (Cl. 179—18)

1. A selector circuit arrangement for selecting one of a plurality of leads, said arrangement comprising means for marking said leads, a first and a second group of magnetic elements, means for threading said leads in a coded distribution through said magnetic elements of said first and

second groups in opposite directions, a plurality of amplifying elements, each of said amplifying elements having an input and an output lead, means for threading the input of each of said amplifying elements through one of said

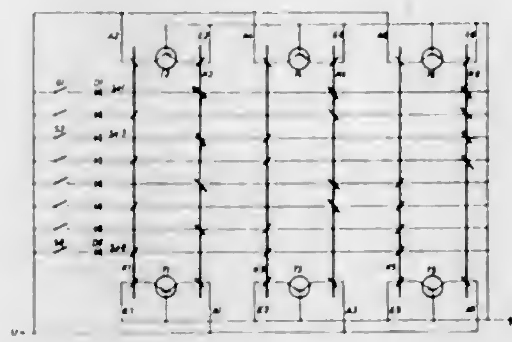

magnetic elements, means for threading the output of each of said amplifying elements through the magnetic element of the coded distribution having the lead threaded therethrough in the opposite direction and a single decoupling means connected to each of said leads.

3,396,243
RECORDING AND REPRODUCTION OF INTELLIGENCE SIGNALS
Raymond R. McDaniel, 317 Cluster Ave., Akron, Ohio 44305
Continuation of application Ser. No. 441,402, Mar. 3, 1965, which is a continuation-in-part of application Ser. No. 755,104, Aug. 14, 1958, now Patent No. 3,187,114. This application Sept. 28, 1966, Ser. No. 586,907
7 Claims. (Cl. 179—100.3)

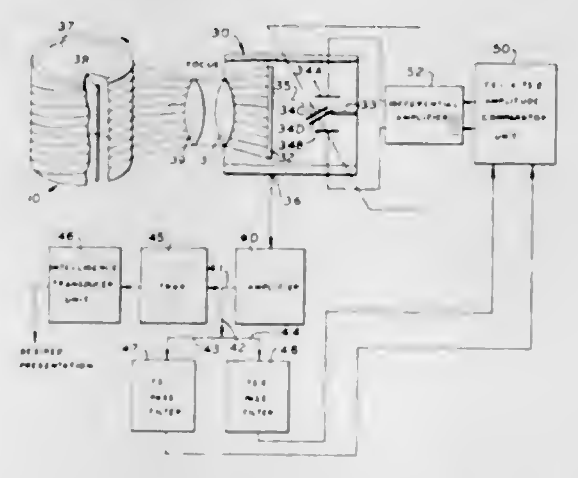

The device records and reproduces intelligence signals. An intelligence signal is received, corrected and converted into a beam which is focused on a photosensitive material. At the same time, a pair of regulated guide signals of a known value are converted to beams and also recorded on the photosensitive material on either side of the intelligence signal. The information, thus permanently recorded, can be readily reproduced.

3,396,244
HANDSET MOUNTED ALTERNATE ACTION SWITCHHOOK AND ASSOCIATED MODE INDICATOR MEANS
Clarence Kowaleski, Rahway, N.J., assignor to Bell Telephone Laboratories, Incorporated, New York, N.Y., a corporation of New York
Filed Dec. 1, 1964, Ser. No. 415,024
8 Claims. (Cl. 179—100)

A telephone handset is enhanced by the addition of a push-push switch which operates a handset-mounted switchhook connected in series with the usual base switchhook. In one position, the handset switch closes the line circuit and also energizes a mode-indicator lamp; in the other, the switch opens the line circuit and extinguishes the lamp. The preferred switch construction is a light-

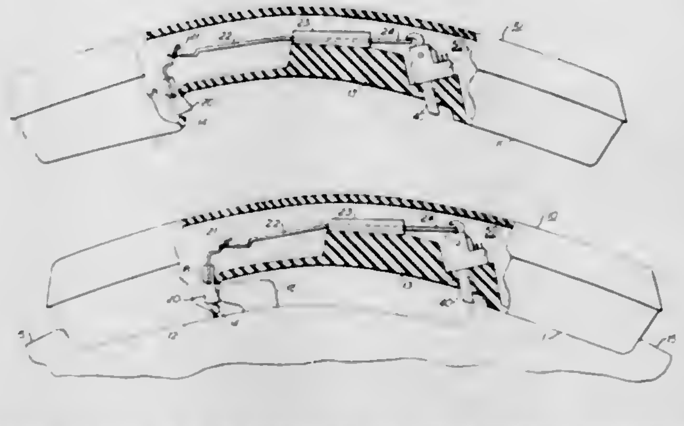

weight rocker. An arm-and-lever mechanism assures that when the handset is cradled, the handset-mounted switchhook is placed "off-hook."

3,396,245
MODE OF SIGNAL RESPONSIVE HEARING AID APPARATUS
Dean W. Flygstad, Roseville, Minn., assignor to The Telex Corporation, Tulsa, Okla., a corporation of Delaware
Filed Dec. 9, 1964, Ser. No. 417,173
8 Claims. (Cl. 179—107)

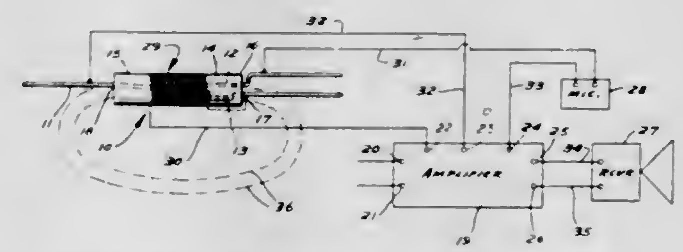

Hearing aid apparatus that is responsive to the mode of transmission of a signal to selectively utilize electromagnetic or compressional wave mediums of transmission for further amplification to increase the magnitude of a signal for application to the auditory sense organs of a user.

3,396,246
TANDEM COLLECTOR ASSEMBLY FOR OVERHEAD ELECTRIFICATION SYSTEM
John W. Roney, Los Altos, Calif., assignor, by mesne assignments, to The Rucker Manufacturing Company, Oakland, Calif., a corporation of California
Continuation of application Ser. No. 527,287, Feb. 14, 1966. This application Jan. 2, 1968, Ser. No. 695,283
17 Claims. (Cl. 191—58)

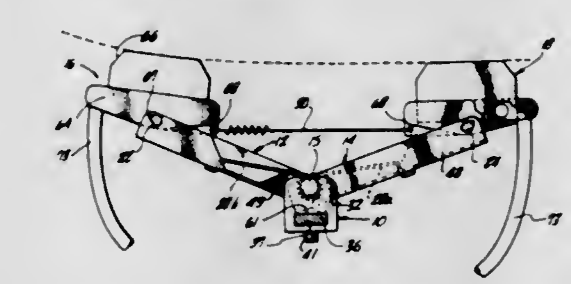

This invention relates generally to a collector assembly for an overhead electrification system, and, more particularly, to a tandem collector assembly designed to operate in continuous and discontinuous systems; this tandem collector assembly forming the present invention comprises generally a base member, a pair of oppositely disposed spring biased movable arms supported thereon, and insulated conductor shoes pivotally supported on the

arms for engaging a conductor bar to transfer current to auxiliary equipment associated with the collector assembly.

3,396,247
SWITCH DEVICE WITH IMPROVED INTERLOCK STRUCTURE
John A. Rankin, St. Joseph, Mich., assignor to V-M Corporation, Benton Harbor, Mich., a corporation of Michigan
Filed June 10, 1966, Ser. No. 556,640
19 Claims. (Cl. 200—5)

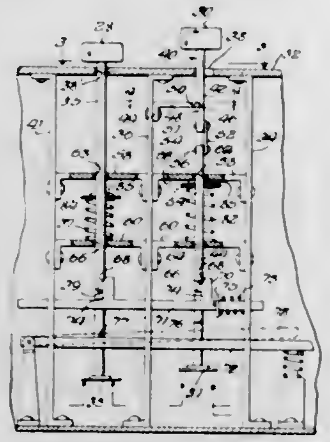

A switch device having an actuating rod axially depressible in a principal direction to actuate a control switch, a spring to resist downward movement of the actuating rod, a push button associated with the actuating rod to effect selective depression thereof, and interlock means operatively associated with either the push button or actuating rod to prevent downward depression of the rod with first either rotating the push button or moving it in a direction transverse to the principal direction.

3,396,248
TAP CHANGER
Gordon A. Wilson, Jr., Washington, Pa., assignor to McGraw-Edison Company, Elgin, Ill., a corporation of Delaware
Filed Dec. 12, 1966, Ser. No. 600,950
10 Claims. (Cl. 200—11)

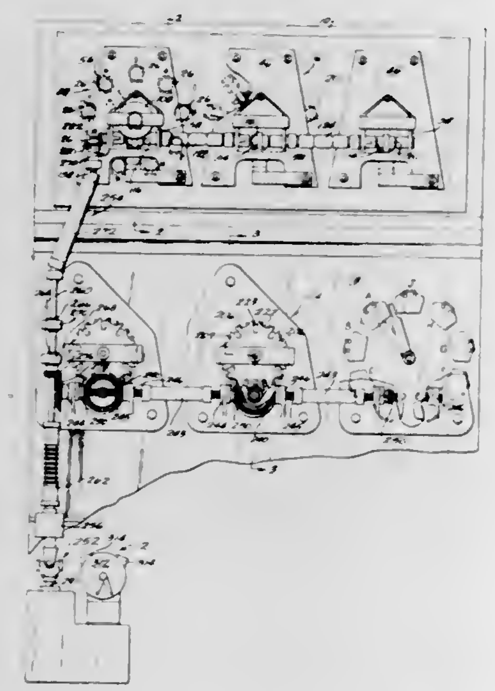

A tap changer is provided which includes a coarse switching assembly for achieving adjustment in relatively wide range voltage steps and a vernier switching assembly for achieving adjustment in relatively narrower range voltage steps within each of the wide range voltage steps. A common drive is disclosed for both the coarse and vernier switching assemblies.

3,396,249
DISTRIBUTOR FOR INTERNAL COMBUSTION ENGINE
Wilhelm Kind and Karl-Heinz Schneider, Sonthofen, Germany, assignors to Robert Bosch G.m.b.H., Stuttgart, Germany
Filed Dec. 14, 1965, Ser. No. 513,759
Claims priority, application Germany, Dec. 16, 1964, B 79,752
The portion of the term of the patent subsequent to Mar. 1, 1983, has been disclaimed
10 Claims. (Cl. 200—19)

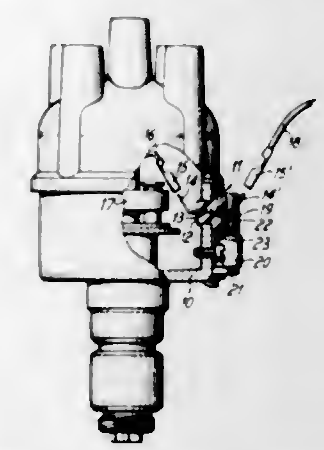

A distributor for an internal combustion engine in which an interrupter turnable carried in the housing of the distributor is connected by a plug and socket type connection to a capacitor located outside of the housing and carried by a bracket fixed to the latter, and wherein one part of said plug and socket type connector extends through an opening in the housing and is removably carried by the aforementioned bracket.

3,396,250
VARIABLE RADIX COUNTER AND PROGRAMMABLE SEQUENTIAL TIMING DEVICE
Eugene Bierman, Pleasantville, N.Y., assignor of one-third to Mark T. Basseches, Pleasantville, N.Y.
Filed July 11, 1966, Ser. No. 564,181
2 Claims. (Cl. 200—35)

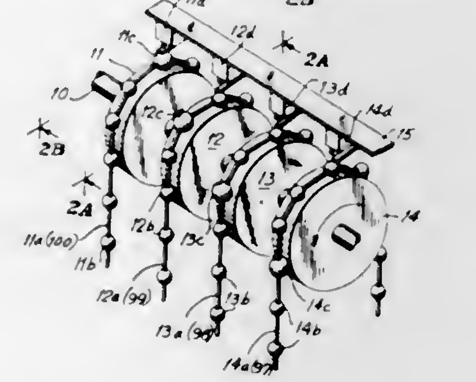

A chain timer device requiring the use of only a single drive shaft, comprising first and second sprockets mounton the drive shaft, first and second chain flights driven by the sprockets, each chain flight including means for activating a switch during each complete cycle of a chain flight, the length of the chain flights and number of teeth in the sprockets being coordinated so that the number of shaft rotations required to drive the flights through a complete cycle differs from one flight to the other, the device being connected to a circuit operated responsive to predetermined positioning of the switch operating means.

3,396,251
CENTRIFUGAL SPEED-RESPONSIVE DEVICE WITH CONTRA-DIRECTIONAL SPRING-LOADING ARMS ACTING UPON A NON-COMPRESSIBLE SPRING
Joseph Greenhut, 3333 Warrensville Center Road, Shaker Heights, Ohio 44120
Filed Oct. 7, 1966, Ser. No. 585,180
14 Claims. (Cl. 200—80)

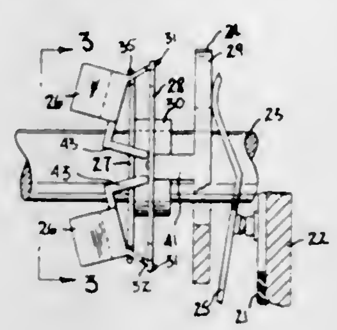

A rotary centrifugal speed-responsive device for actuating a control element at a predetermined speed of rotation in which contra-pivotal spring-loading lever arms are fixed to pivotally mounted weights, and a non-compressible spring element is pivotally mounted between the lever so as to deform into a control-actuating bowed displacement when the ends thereof are subjected to a predetermined value of load resulting from inward weight-induced movement of the spring-loading arms. The inherent load-deflection pattern of the non-compressible spring can be modified for more sensitive snap-action by using a second lever arm fixed to each weight which will abut the span of the spring when the rotary device is in a state of rest or low speed and prevent or restrain its deflection; however, its length and position in relation to the loading arm is such that its rate of travel will disengage it from restraint on the spring at a higher predetermined speed and permit effective snap-action displacement upon the sudden relief of the artificial overload which the restraining lever arm has created.

3,396,252
ELECTRICAL SURFACE SWITCH HAVING IMPROVED BIASING MEANS
Ryunosuke Serizawa, 3—26, Shimouma-cho, Setagaya-ku, Tokyo, Japan; Kiichi Tanaka, Tsu-20, Aza Ryoke, Tsuhata-cho, Kahoku-gun, Ishikawa-ken, Japan; and Osamu Takamatu, 1—23—10 Fukazawa-cho, Setagaya-ku, Tokyo, Japan
Filed Dec. 2, 1966, Ser. No. 598,844
Claims priority, application Japan, Dec. 6, 1965, 40/74,948
5 Claims. (Cl. 200—86)

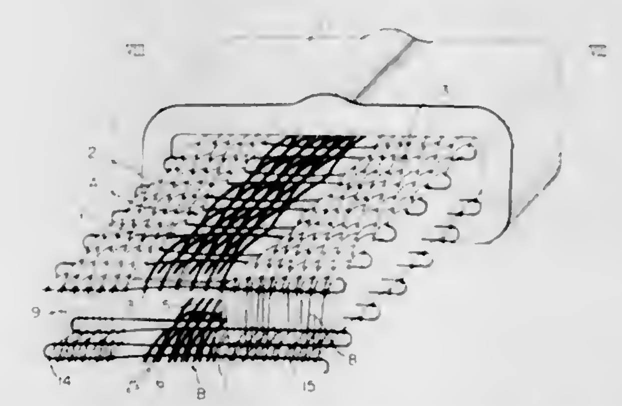

An electrical surface switch comprising two flexible contact sheets made of electrically conductive fabrics adapted to make electrical connection when the opposed surfaces thereof are brought into contact with each other. The two contact sheets are normally biased away from each other to normally open positions by means of a multiplicity of resilient fibers which are interwoven with at least one of the contact sheets and extend between the two sheets. When the two contact sheets are moved to the closed position, the resilient fibers flex so as to permit the opposed surfaces of the sheets to contact each other.

3,396,253
GAS BLAST CIRCUIT BREAKER HAVING BOTH BULGED-OUT PORTION IN HOLLOW INSULATOR AND GAS FLOW GUIDE TUBE ADJACENT SWITCHING MEMBERS
Helmuth Schubert and Janis Vitins, Wettingen, Switzerland, assignors to Aktiengesellschaft Brown, Boveri & Cie, Baden, Switzerland, a joint stock company
Filed July 16, 1965, Ser. No. 472,423
Claims priority, application Switzerland, July 24, 1964, 9,703/64
5 Claims. (Cl. 200—148)

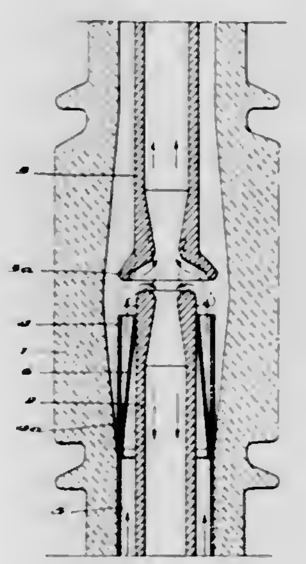

An electrical circuit breaker of the gas blast type includes a pair of coaxially arranged switching members that separate within a bulged out portion of a hollow insulator which serves as a quenching chamber. In order to maintain an essentially laminar flow of pressurized gas to the point at which the switching members separate, a gas supply tube concentrically surrounds one of the switching members which is stationary in radially spaced relation to establish an annular gas flow passageway and the discharge end of this gas supply tube terminates adjacent the end of the stationary switching member so as to deliver the gas to the switching point.

3,396,254
ARRANGEMENT FOR AVOIDING EDDY CURRENT LOSSES IN TRANSFER SWITCH AND SELECTOR SWITCH UNITS WITH INTERPOSED GEAR DRIVE
Alexander Bleibtreu, Regensburg, Germany, assignor to Maschinenfabrik Rheinhausen Gebruder Scheubeck K.G., Regensburg, Germany
Filed June 1, 1966, Ser. No. 554,436
Claims priority, application Germany, June 30, 1965, M 65,750
2 Claims. (Cl. 200—153)

Disclosed below is a single-phase transfer and selector switch unit for tapped regulating transformers of the so-called Jansen-type. The transfer switch is arranged above the selector switch and the Geneva gear drive for the latter is interposed between the former and the latter. The outgoing lead connected to the transfer switch and the two leads conductively connecting the selector switch and the transfer switch extend transversely across the aforementioned Geneva gear drive. When two of the aforementioned

three leads are current-carrying, their currents are of equal magnitude and opposite direction, and thus magnetic fields

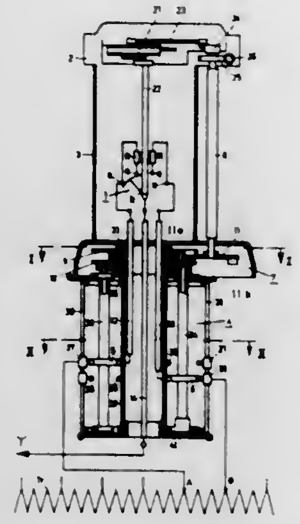

thereof mutually cancel each other, precluding eddy current losses.

3,396,255
SWITCH WITH TWO CONTACT PAIRS
Woodrow A. De Smidt, Whitefish Bay, Wis., assignor to Allen-Bradley Company, Milwaukee, Wis., a corporation of Wisconsin
Filed Dec. 16, 1966, Ser. No. 602,394
5 Claims. (Cl. 200—153)

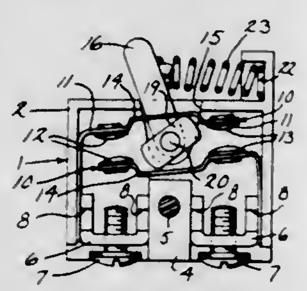

This disclosure relates to a switch including a case with two terminals at opposite lower corners. Two resilient leaves extend upwardly from the terminals and turn inwardly to define parallel, vertically spaced contact portions that are biased together and that each bear two contacts to have two spaced pairs of contacts. An actuating arm is pivotally mounted in the case at its inner end and carries a bar shaped cam which extends between the leaves between the contact pairs. The cam pivots with the arm between a first position where it spreads the contact portions to open both contact pairs and a second position where it is disengaged to allow both contact pairs to close. The arm extends above the case and is mechanically operable to be pivoted toward one of said positions, and a bias spring operates between an abutment on the case and the arm to urge the arm toward the other of said positions.

3,396,256
MOMENTARY BREAK SWITCH COMPRISING A DELAY MEANS AND/OR A SHUNT CONNECTION
Conrad Diehl, Rochester, N.Y., assignor to Eastman Kodak Company, Rochester, N.Y., a corporation of New Jersey
Filed Aug. 10, 1967, Ser. No. 659,666
15 Claims. (Cl. 200—160)

A momentary break switch is provided wherein an actuation of a push button plunger forces a conductive blade between a pair of normally closed contacts. A circuit current path is maintained between the contacts while the blade is therebetween but is broken when the blade passes wholly from between the contacts, during the increment of time it takes for the contacts to snap together. One of the contacts, the movable one, is mounted on a pivoted rocker member which provides for movement of

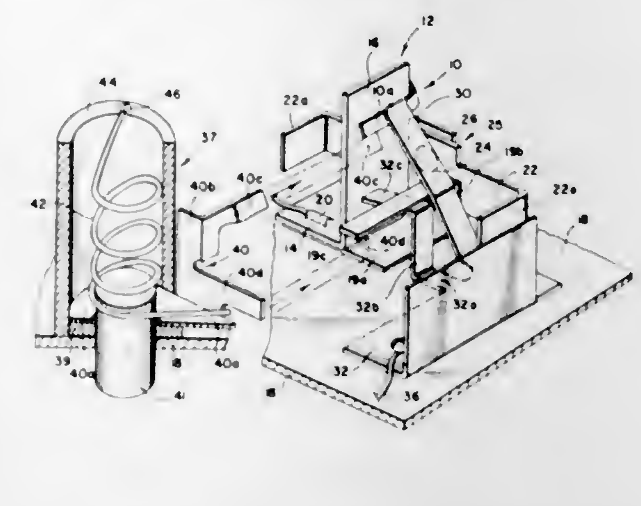

the movable contact and incorporates an inertia delay in the closing movement, thus adding time delay. A shunt connection different from the connection made through the two contacts is also provided, the shunt connection being broken when the push button plunger is actuated.

3,396,257
MINIATURE CONTACT SET USING PRE-STRESSED COILED SPRING
Charles Vazquez, Paris, France, assignor to International Standard Electric Corporation, New York, N.Y., a corporation of Delaware
Continuation of application Ser. No. 457,028, May 19, 1965. This application Mar. 28, 1967, Ser. No. 626,579
Claims priority, application France, May 26, 1964, 975,865
24 Claims. (Cl. 200—166)

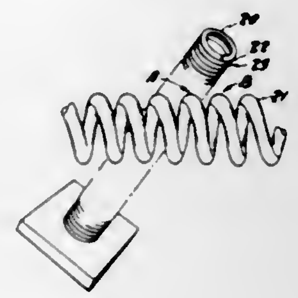

A mobile contact in the form of a pre-stressed coiled finger spring is mounted in a fixed-free position so that its free end is able to move in any direction. An elongated stationary contact extends perpendicularly to the finger spring. The two contacts may engage each other at any one of many different locations responsive to movement of the free end of the finger spring. The stationary contact is formed to provide twin contact reliability regardless of the exact location where the two contacts touch each other.

3,396,258
APPARATUS FOR INDUCTION HEATING
Alfred F. Leatherman, Columbus, Ohio, assignor, by mesne assignments, to William C. Heller, Jr.
Filed Oct. 21, 1965, Ser. No. 499,150
14 Claims. (Cl. 219—10.53)

Induction heating apparatus includes a single loop coil connected to a high frequency power source for producing a surrounding magnetic field when energized. The apparatus also includes a non magnetic metallic member

separate and spaced from the coil to form a gap. The metallic member is located in the field produced by the coil and is excitable by the magnetic-field to concentrate

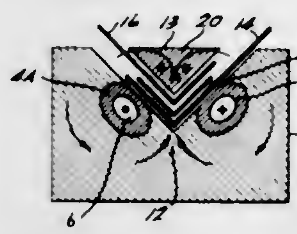

the magnetic field in the gap and to remove portions of the magnetic field not so concentrated. Material may be inserted in the gap for induction thermal processing.

3,396,259
METHOD FOR ELECTRO-DISCHARGE MACHINING
Dewey S. Easton, Lenoir City, Tenn., assignor to the United States of America as represented by the United States Atomic Energy Commission
Filed Aug. 30, 1965, Ser. No. 483,893
2 Claims. (Cl. 219—69)

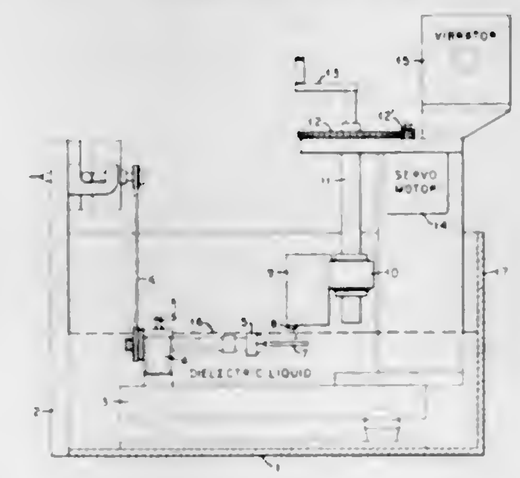

The cutting tool of a spark cutting device is vibrated in a plane parallel to the surface of a workpiece being worked such as to provide a substantial increase in the cutting rate, to yield good machine stability, and to substantially reduce the wear rate of the tool, thus permitting the use of a tool having a high melting point and a low vapor pressure.

3,396,260
FORCE-APPLYING FABRICATING DEVICE
Edward J. Waltonen, Southfield, Mich., assignor to Wes Industries, Inc., Royale Oak, Mich., a corporation of Michigan
Filed Jan. 21, 1965, Ser. No. 426,790
23 Claims. (Cl. 219—89)

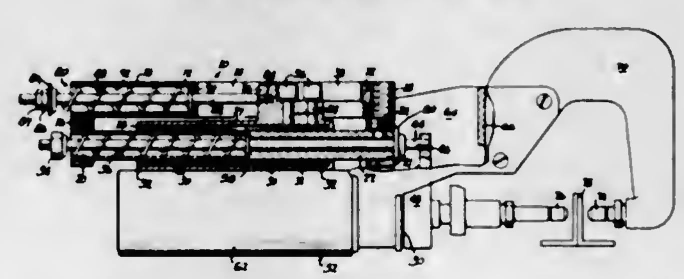

A self-equalizing fabricating apparatus, such as a resistance welder, which utilizes a fluid motor movably supported by a base for driving two tools into a cushioned engagement with a workpiece. One of the tools is fixed to the piston rod and the other tool is fixed to the cylinder of the motor. The self-equalizing action is effectuated by a connection means fixed to the piston rod and operatively communicating with the base. The connection means is alternatively, a spring bias, a hydraulic chamber with a fluid communication to the fluid motor support, a direct abutment, and a combination of the spring bias and the hydraulic chamber arrangements.

3,396,261
ELECTRIC HAND-OPERATED SPOT WELDER
Bernhard Kirsch, Biewerer Strasse 193, Trier-Biewer, Germany
Filed July 21, 1964, Ser. No. 384,222
Claims priority, application Germany, July 25, 1963, K 50,349; Mar. 2, 1964, K 52,259
18 Claims. (Cl. 219—90)

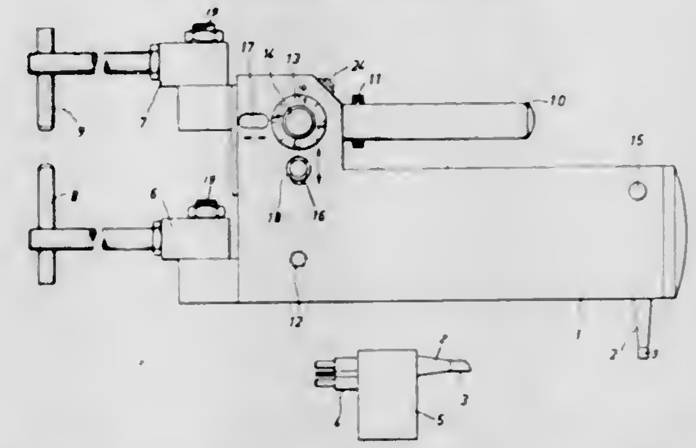

Of two cooperating welding electrodes, one is fixed relative to a housing and the other is mounted for movement relative to the housing, either by the action of a rack and gear rotating a cam plate engageable with the movable arm, or by a plunger pressing a roller against an inclined surface on the movable arm, or by a fluid-actuated piston and cylinder acting between the movable arm and the housing. One electrode is mounted in a stationary holder and the other electrode is mounted in a holder movable transversely of its length toward the stationary holder, or movable lengthwise toward and away from an electrode carried by the stationary holder. Control switches for welding current are mounted for operation by rotation of the arm-moving cam plate, or by reciprocation of the electrode-moving plunger, or by movement of a number correlated with the electrode-moving piston and cylinder, such as a second piston in a cylinder connected in the same hydraulic circuit with the electrode-moving cylinder. A liquid reservoir and pump for supplying liquid under pressure to the electrode-moving mechanism, a motor to drive the pump, a cooling fan and a transformer for supplying electric welding current are mounted as separate units in the welding apparatus housing for independent insertion in and removal from the housing. Both electrodes can be swung relative to the housing from a central position to one side or the other, or up or down. Electric current can be conducted to the electrodes through arms supporting the electrode-moving cylinder. An electrically-conductive sleeve is located between the cylinder and one arm through which current is conducted to one electrode. The other arm is connected directly to the other electrode holder and an insulating sleeve isolates that electrode holder and arm from the cylinder.

3,396,262
MEANS FOR OBSERVING ELECTRON BEAMS
Hideo Kuroda, Tokyo, Japan, assignor to Nippon Electric Company Limited, Tokyo, Japan
Filed Nov. 23, 1964, Ser. No. 413,257
Claims priority, application Japan, Nov. 28, 1963, 38/89,268
5 Claims. (Cl. 219—121)

Apparatus for permitting the observation of the bombardment of a work piece by an electron beam. The work piece is positioned within a work chamber containing

an opening having a transparent window for permitting said observation. The work chamber is formed of a metallic material. A portion of the transparent window is coated on its interior surface with a transparent conductive material which is electrically isolated from the work chamber. A shield is positioned within the interior of the work chamber and surrounds the uncoated portion of the transparent window to prevent collection of

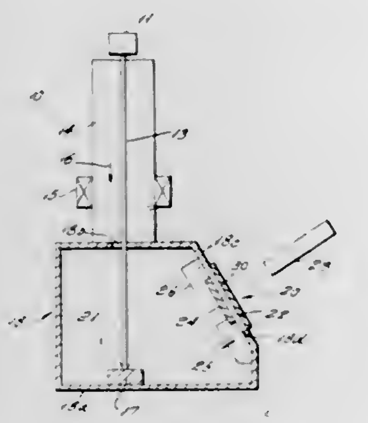

charged particles thereon. Bias means are provided for establishing a slightly positive voltage relative to the potential level of the work chamber to repel positively charged particles. A second transparent conductive coating may be provided on the exterior surface of the transparent window. This coating makes electrical contact with the work chamber to eliminate the presence of an electrical field exterior to the work chamber.

3,396,263
OSCILLATING ARC WELDING GUN
Thomas M. Even, Milwaukee, and Milford E. Berg, Brookfield, Wis., assignors to Harnischfeger Corporation, West Milwaukee, Wis., a corporation of Wisconsin
Filed Dec. 16, 1965, Ser. No. 514,419
7 Claims. (Cl. 219—127)

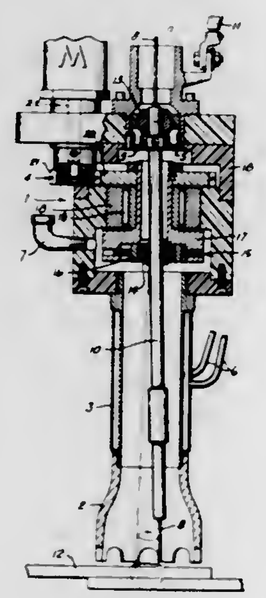

An arc welding nozzle, for burn through spot welding, having a non-oscillating main body and a minimal weight contact tube pivotally connected therein for circular swinging motion. The contact tube has a central passage therethrough for guiding a consumable electrode therethrough. A variable speed drive mechanism is connected to the contact tube by an adjustable device for varying the amplitude of oscillation.

3,396,264
ELECTRICALLY HEATED SOCK WITH BATTERY SUPPORTING POUCH
Dennis J. Murphy, Fishkill, and Charles F. Balz, Beacon, N.Y., assignors to Timely Products Corporation, a corporation of Connecticut
Filed Sept. 8, 1967, Ser. No. 666,412
13 Claims. (Cl. 219—211)

An electrically heated sock having a pouch generally integrally formed of a sheet of blank material which is specifically die cut and folded to define a pocket having a flap for encasing a battery therein and having contacts arranged to provide positive contact with the electrodes of the battery disposed within the pouch when the flap is closed.

3,396,265
ELECTRICALLY HEATED BEDCOVER OVERTEMPERATURE CONTROL
Chester F. Jacobson, Asheboro, N.C., assignor to General Electric Company, a corporation of New York
Filed Dec. 30, 1965, Ser. No. 517,570
7 Claims. (Cl. 219—212)

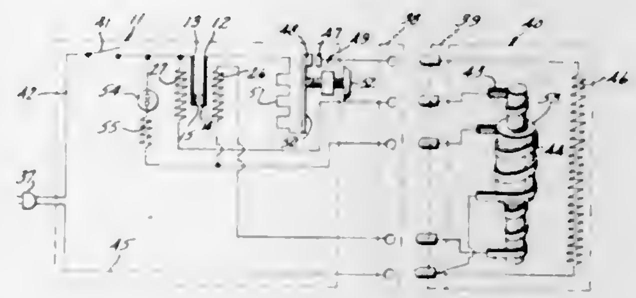

An electrically heated bedcover is controlled by a power switch formed by a pair of normally open contacts mounted on thermally responsive members which move in the same direction responsive to heat. Heaters of different wattage are mounted on these thermally responsive members and connected in a series circuit, with the difference in heat supplied causing the contacts to close. A temperature sensor in the blanket includes a sensing layer which conducts significant current only at elevated temperatures, and this layer is connected in shunt with one of the heaters, so that the power switch opens whenever such elevated temperatures exist.

3,396,266
OPTICAL INFORMATION READ-OUT SYSTEM
Erhard Max, Wappingers Falls, and Glenn T. Sincerbox, Poughkeepsie, N.Y., assignors to International Business Machines Corporation, New York, N.Y., a corporation of New York
Filed May 25, 1964, Ser. No. 369,741
7 Claims. (Cl. 235—61.11)

Apparatus is provided for optically reading out stored information by using reflected light. The apparatus provides two output beams of reflected light from the surface

storing the information in the form of reflecting layers. Light accessing means is employed for twice interrogating a storage area on a film with the same beam so that

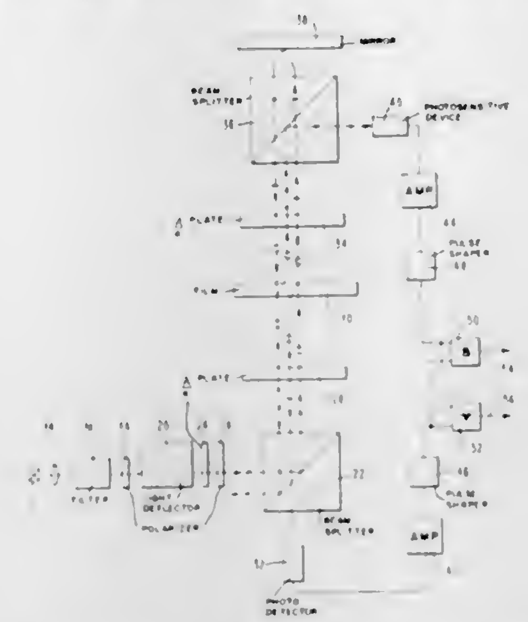

separate outputs are provided for each interrogation. The outputs are either compared for error detection purposes or combined in order to obtain an output signal having greater intensity.

3,396,267
HEAT SIMULATOR COMPUTER
Arnold K. Dietrich, Binghamton, N.Y., assignor, by mesne assignments, to the United States of America as represented by the Secretary of the Navy
Filed Apr. 22, 1965, Ser. No. 450,224
1 Claim. (Cl. 235—193)

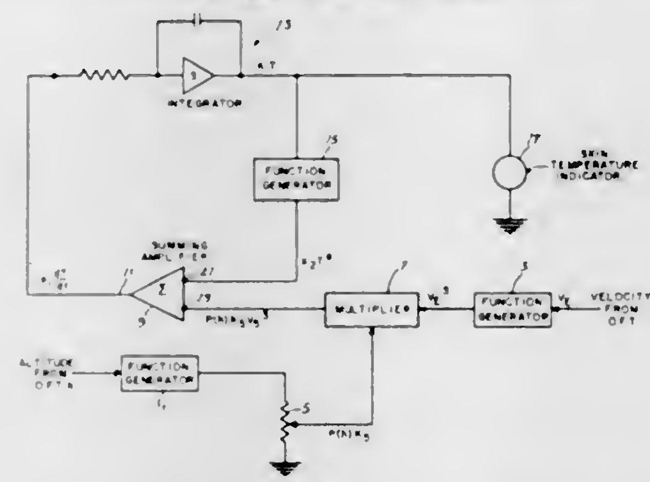

A computer for providing, in a space capsule simulator, an indication of capsule skin temperature resulting from simulation of movement of the capsule through the atmosphere at a simulated altitude and velocity as represented by voltage signals to the computer, the computer comprising three function generators, one of which provides a third power function of the input thereto and another of which provides a fourth power function of the input thereto, potentiometer means, multiplier means, summing means, integrating means and indicating means, all connected in a combination which provides to the indicator means signals which result in the desired temperature indication.

3,396,268
LAMP ASSEMBLY
Bertram Cohon, Hackensack, N.J. (% C. N. Burman Co., 781 River St., Paterson, N.J. 07524)
Filed Oct. 20, 1965, Ser. No. 498,736
10 Claims. (Cl. 240—81)

A lamp assembly which has a spider bracket surrounding the socket and supporting a pellucid bowl and shade assembly. The spider bracket has three arms equally spaced around its perimeter and extending upwardly to form a cup in which the socket is mounted. The bowl is

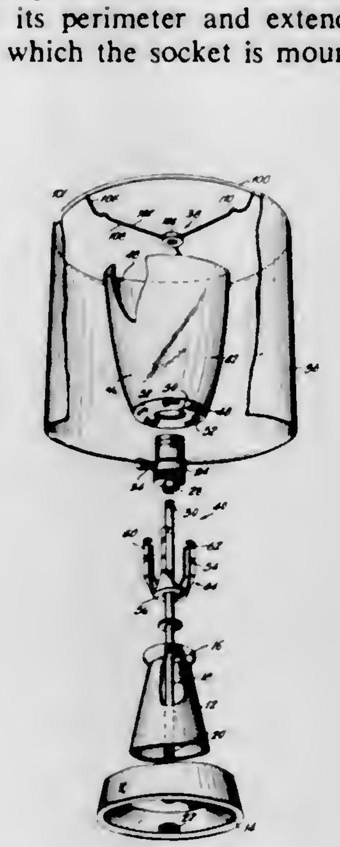

supported on the upper ends of the bracket arms and the shade rests on top of the bowl such that the socket along with both the interior and exterior of the bowl is cooled by free convection.

3,396,269
SNAP-IN LENS
Wesley T. Sorenson, West Hartford, Conn., assignor to Sorenson Lighted Controls, Inc., Hartford, Conn., a corporation of Connecticut
Filed Dec. 21, 1965, Ser. No. 515,300
2 Claims. (Cl. 240—152)

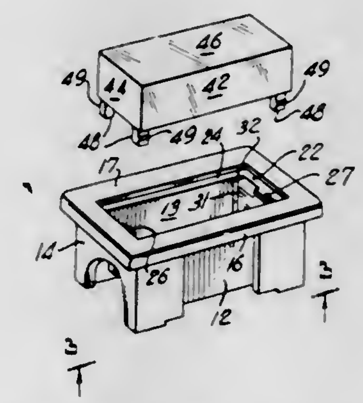

Lens-case assembly having snap action replaceable lens.

3,396,270
CIRCUIT CONTROLLER FOR RAILWAY SWITCH MACHINES
Ralph W. Kugler, Brookline, and Robert A. Wenston, Pittsburgh, Pa., assignors to Westinghouse Air Brake Company, Swissvale, Pa., a corporation of Pennsylvania
Filed Dec. 23, 1965, Ser. No. 515,875
19 Claims. (Cl. 246—218)

A circuit controller for railway switch machines having a recessed point detector bar and a notched lock rod connected to the switch points; a slide bar having a locking dog for engaging the notched lock rod and locking the switch points in either of their extreme positions; a mechanical coupling assemblage including two linkages

each having a crank with a roller and pin; each linkage connected to and closing respective contacts of an electrical contact assembly when its respective roller and pin

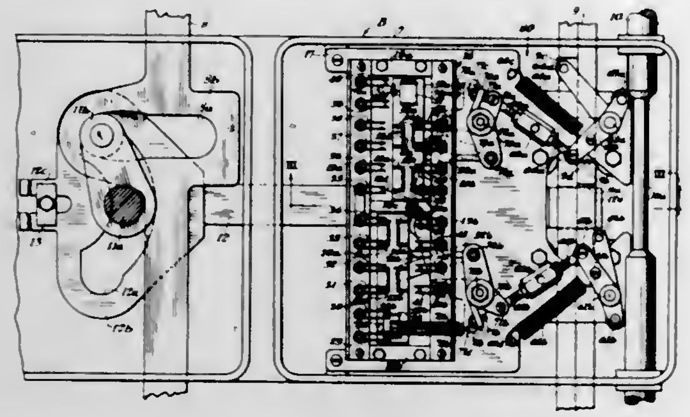

simultaneously communicate with the recessed point detector bar and notched lock rod for ensuring that the switch points are properly positioned and locked in their extreme position.

3,396,271
RAILROAD-WHEEL OPERATED CONTROL-SIGNAL GENERATOR
Cornelius A. Gallagher, Syosset, N.Y., assignor to Servo Corporation of America, Hicksville, N.Y., a corporation of New York
Filed Mar. 15, 1967, Ser. No. 623,253
5 Claims. (Cl. 246—249)

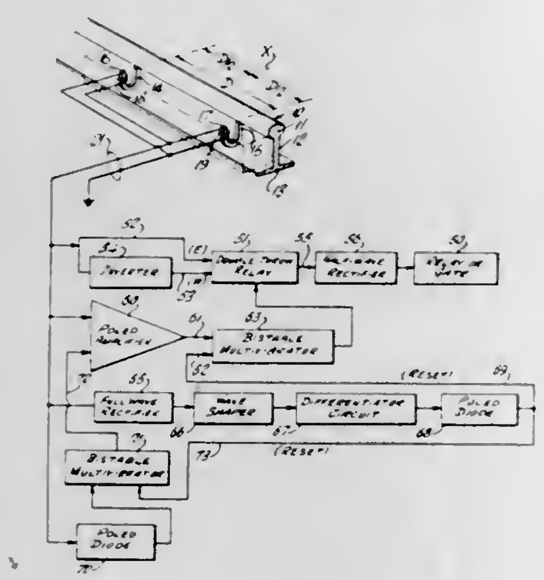

This invention is concerned with a particular interconnection of two magnetic-induction wheel-trip devices capable of responding to railroad-wheel movement and so interconnected as to effectively nullify or buck-out spurious signals induced by electric currents passing down the rails, as in electrified territory. The arrangement is such that not only are the spurious signals eliminated, but a control signal is developed in a polarity which is insensitive to the particular direction of traffic passing the wheel-trip location.

3,396,272
ISOTOPE-POWERED X-RAY INSTRUMENT FOR DETECTING THE ARRIVAL OF AN INTERFACE IN A PIPELINE
Donald M. Olson, Santa Fe, N. Mex., granted to United States Atomic Energy Commission under provisions of 42 U.S.C. 2182
Filed Oct. 26, 1964, Ser. No. 406,311
10 Claims. (Cl. 250—43.5)

Detects arrival of interface in a pipeline with an X-ray generator-detector system wherein Pm^{147} is deposited on concave surface of copper reflection target, a very thin copper foil and a "Lucite" filter are positioned be-

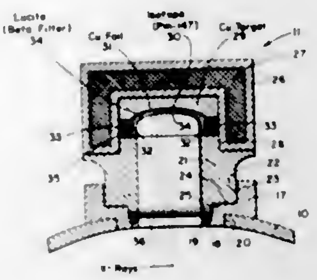

tween the Pm^{147} and a beryllium window, and a collimator is between said filter and said window.

3,396,273
IRRADIATION EQUIPMENT WITH MEANS TO CONVEY GOODS AT A NON-UNIFORM SPEED PAST A RADIATION SOURCE FOR MAXIMUM EXPOSURE
Alfred Brunner, Winterthur, Switzerland, assignor to Sulzer Brothers Limited, Winterthur, Switzerland, a corporation of Switzerland
Filed Apr. 9, 1965, Ser. No. 446,977
Claims priority, application Switzerland, Apr. 13, 1964, 4,787/64
4 Claims. (Cl. 250—52)

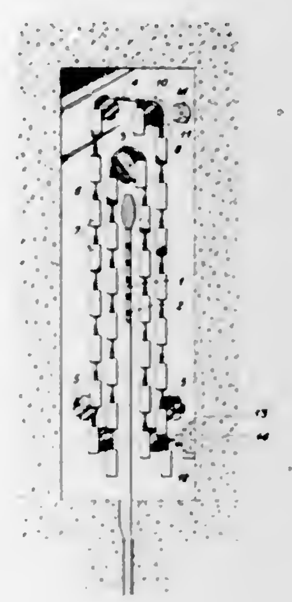

The packages being irradiated are moved about a pair of parallel tracks so that the packages on the inner track shield the packages on the outer track when aligned relative to the radiation source. The movement of the packages is intermittently interrupted to permit exposure of the outer packages for a maximum time during which the outer track packages are unshielded and a minimum time of nonexposure when shielded.

3,396,274
MECHANISM FOR SIMULTANEOUSLY TILTING AND RAISING A PATIENT X-RAY TABLE
William J. Hogan, Philadelphia, Pa., assignor, by mesne assignments, to Ritter Pfaudler Corporation, Rochester, N.Y., a corporation of New York
Filed May 11, 1966, Ser. No. 549,314
5 Claims. (Cl. 250—55)

1. In an X-ray apparatus; an elevator housing; a pair of support columns passing vertically through said eleva-

tor housing; an X-ray table frame positioned along one side of said elevator housing; a vertically disposed semi-circular segment fixed to the side of said frame adjacent said elevator housing; a shaft fixed to said segment and projecting laterally therefrom onto said elevator housing; means supporting said projecting end of said shaft on said elevator housing; counter-balance means supporting said elevator housing and its load, including said table frame;

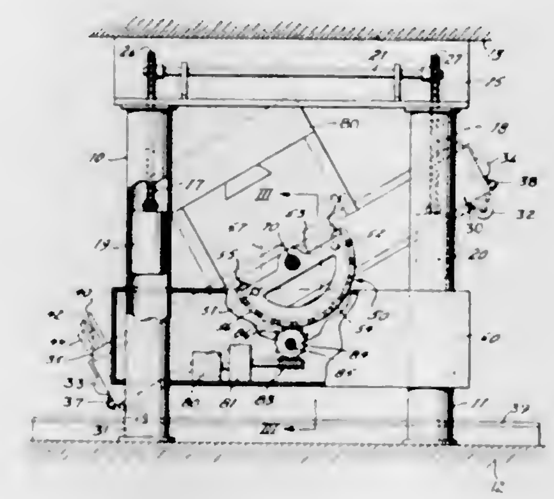

drive means mounted on said elevator housing and engaging the semi-circular edge of said segment for pivoting said segment on said shaft, thereby to tilt said X-ray table frame to a desired angular position relative to the horizontal; and means for automatically elevating the center of said X-ray table frame as said table frame moves away from the horizontal toward a vertical position.

3,396,275
IONIZATION TYPE RADIATION DETECTOR
Philip T. Martin, Columbus, and Donald J. Tompos, Worthington, Ohio, assignors to Industrial Nucleonics Corporation, a corporation of Ohio
Filed Aug. 24, 1964, Ser. No. 391,719
24 Claims. (Cl. 250—83.6)

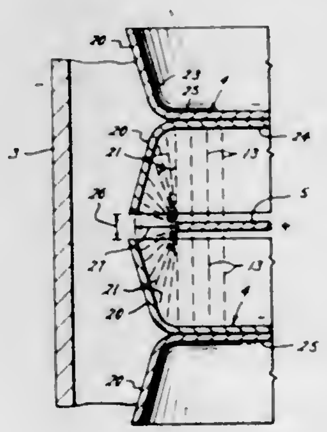

An ionization chamber designed for improved temperature stability. The chamber includes a metallic housing, voltage electrodes that are circular plates and spaced apart. The same potential is applied to the voltage electrodes and the housing. An ionizable gas is sealed in the housing. A signal electrode, also a circular plate, is disposed between the voltage electrodes, and is at a different potential. The electric field at the end of the voltage and signal electrodes, adjacent the housing, is maintained high, by a lip about the circumference of the voltage electrodes that embraces the end of the signal electrode.

3,396,276
DIRECTION DETECTOR FOR FLYING SPOT SCANNER WITH DIGITAL INDICATOR THEREFOR
William W. Hardin, Stewartville, and James J. Kennedy, Rochester, Minn., assignors to International Business Machines Corporation, Armonk, N.Y., a corporation of New York
Filed Jan. 5, 1966, Ser. No. 518,845
5 Claims. (Cl. 250—202)

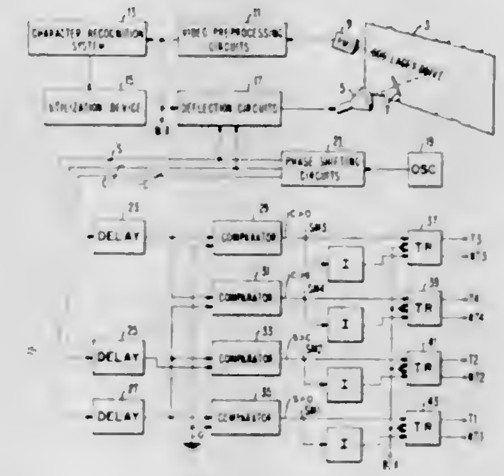

1. In a flying spot scanner of the curve following type, including a cathode ray tube and deflection means for positioning the cathode ray tube beam to successive positions along a pattern or curve to be traced, the combination comprising

sinusoidal voltage generator means for providing a base sinusoidal voltage of predetermined amplitude and frequency;

phase shifting means connected to said voltage generator means for deriving a plurality of angularly related sinusoidal voltages from said base sinusoidal voltage;

deflection circuit means connected to said phase shifting means to provide a circular type of trace by the combined action of at least two of said angularly related signals; and

direction indicating means connected to said phase shifting means for indicating the direction of motion of the spot of the cathode ray tube including comparing means for comparing different ones of said angularly related signals with other ones of said angularly related signals to produce a plurality of digital signal values indicative of the range of motion of the spot over semicircular portions of the circular trace; and

digital logic means for indicating selected combinations of said digital signal values indicative of specific spot motion directions.

3,396,277
RADIATION SENSITIVE IRRIGATION DEVICE
Charles Ayme de la Chevreliere, 21 Ave. de Madrid, Neuilly-sur-Seine, France
Filed Sept. 30, 1964, Ser. No. 400,380
Claims priority, application France, Oct. 22, 1963, 951,330
7 Claims. (Cl. 250—215)

1. An automatic irrigation arrangement comprising, in combination, valve means movable between an open position admitting water to an irrigation device and a closed position; actuating means connected to said valve means for moving the latter between said positions thereof; and control means connected to said actuating means for controlling the same and including radiation sensitive stationary means arranged and constructed to emit a signal and

ray limiting means subjecting said radiation sensitive means to rays of the sun at a predetermined angle and a predetermined intensity to actuate said actuating means

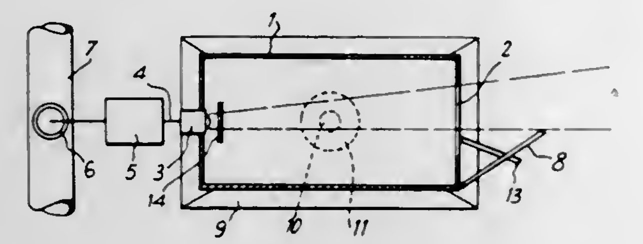

and to thereby move said valve means to one of said positions as long as said signal is emitted and to move said valve means to the other of said positions upon cessation of said signal.

3,396,278
PHOTOELECTRIC LENGTH MEASUREMENT USING COARSE AND FINE PHOTOCELLS
Bo Hjorth, Sollentuna, Sweden, assignor to North American Philips Company, Inc., New York, N.Y., a corporation of Delaware
Filed Nov. 12, 1964, Ser. No. 410,671
Claims priority, application Sweden, Jan. 14, 1964, 408/64
3 Claims. (Cl. 250—219)

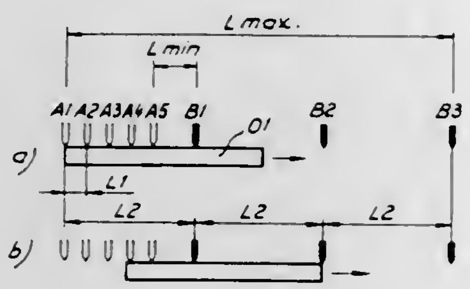

A length measuring device is provided with a first group of closely spaced sensors and a second group of more widely spaced sensors, both sensor groups being responsive to the passage of an article of length. The sensor devices are designed to have only one sensor activated at any point in time by means of a series of gates which are sequentially energized to receive signals upon the energization of one preceding signal. The position of the article with regard to the first group of sensors is defined by means of a storage device having a count therein indicative of the activation of sensors in accordance with the trailing edge of the article. The second group of sensors responds to the leading edge of the article and an accumulating storage device is coupled to the sensors to give an indication of position. When the article has completed passage at a predetermined point, a gating device responds to empty the contents of both storage devices into a counter, thereby providing an indication of the article length.

3,396,279
APPARATUS FOR DETECTING PASSAGE OF MOVING OBJECTS
Yoshio Tokuda, Tokyo, Japan, assignor to Kinkohsha Insatsu Kabushiki Kaisa (Rep: Kinsen Tokuda), a corporation of Japan
Filed Jan. 6, 1965, Ser. No. 423,742
Claims priority, application Japan, Apr. 17, 1964, 39/29,828
2 Claims. (Cl. 250—221)

This invention relates to a directional detector adapted to detect directions in which men and objects move along predetermined paths and to operate sound means, indicating means, guiding means and recording means in accordance with the detected directions. It consists essentially of a circuit having two detectors, photoelectric ele-

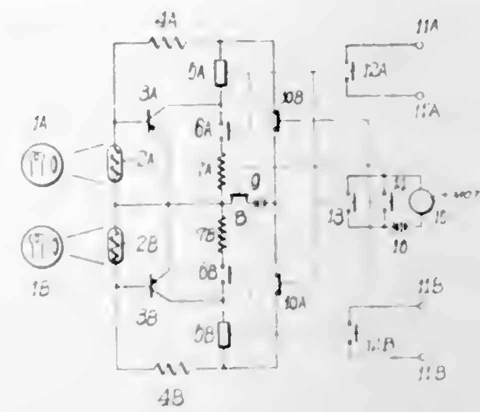

ments and two relays. A detector is placed at the entrance and at the exit of an area which is a passageway for men or objects.

3,396,280
METHOD FOR DETERMINING THE FAT CONTENT OF TRIMMINGS OR SIMILAR PIECED MEATS
Erik Stenberg Knudsen, Roskilde, Denmark, assignor to Slagteriernes Forskningsinstitut, Roskilde, Denmark, a company of Denmark
Filed Aug. 24, 1965, Ser. No. 482,163
Claims priority, application Denmark, Aug. 28, 1964, 4,256/64
1 Claim. (Cl. 250—223)

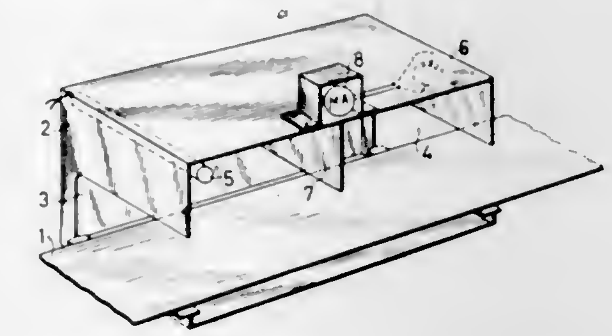

1. In a method of determining the ratio between fat and lean in a batch of meat lumps prepared for the production of meat products the steps of distributing said lumps in a layer on a conveyor feeding said layer into a zone in which it is irradiated with light, measuring by photoelectric means the light reflected from said layer in said zone and deriving from the measured instantaneous values a mean value as a measure of the ratio of lean and fat in said portion.

3,396,281
REFLECTIVE PHOTOELECTRIC PICKUPS
Robert J. Blackman, Rochester, N.Y., assignor to Eastman Kodak Company, Rochester, N.Y., a corporation of New Jersey
Filed Aug. 12, 1965, Ser. No. 479,178
9 Claims. (Cl. 250—239)

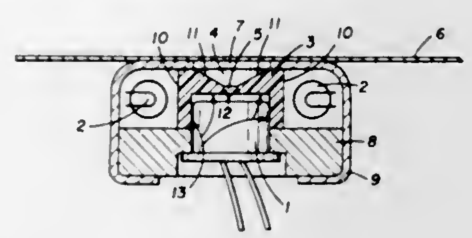

5. A device for increasing the sensitivity of a photoelectric pickup comprising, a block of light transmitting material having an opening therein through which light may pass, one end of said opening being larger than the other end and at least part of the surface of said block on the inside of said opening being light diffusing and transmitting.

ERRATUM

For Class 307—202 see:
Patent No. 3,396,292

3,396,282
TIME DELAY CIRCUIT EMPLOYING LOGIC GATE
Alfredo Sheng, Cherry Hill, and Emile Hebert, Willingboro, N.J., assignors to Radio Corporation of America, a corporation of Delaware
Filed Aug. 20, 1965, Ser. No. 481,283
9 Claims. (Cl. 307—208)

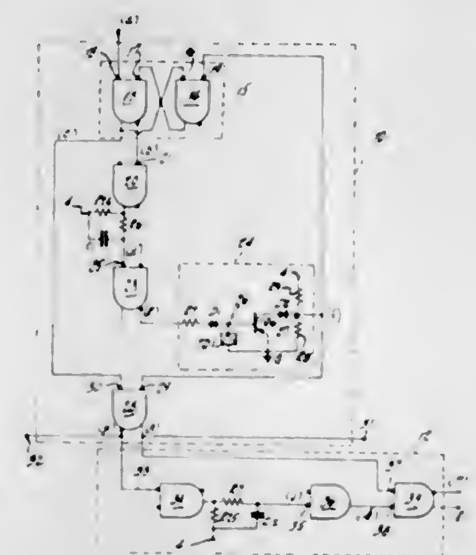

A logic gate and capacitor arrangement are described for obtaining time delay. In the illustrated example, current mode type gates with complementary outputs are employed together with capacitors and a waveshaper to obtain a regenerative long time delay followed by a short time delay.

ERRATUM

For Class 307—268 see:
Patent No. 3,396,293

3,396,283
SEMICONDUCTOR DEVICES AND CIRCUITS USING THE PINCH EFFECT
Maurice Glicksman and Martin C. Steele, Princeton, N.J., assignors to Radio Corporation of America, a corporation of Delaware
Continuation of application Ser. No. 849,341, Oct. 28, 1959, which is a continuation-in-part of application Ser. No. 767,459, Oct. 15, 1958. This application May 7, 1965, Ser. No. 457,246
3 Claims. (Cl. 307—309)

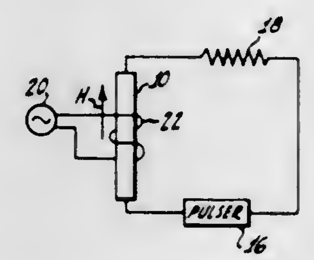

1. In combination,

a body selected from the group consisting of semiconductors and insulators having an electron-hole plasma therein, said electron-hole plasma including substantially equal numbers of electrons and holes,

means to apply an electric field to said body of a magnitude to produce in said body a self-induced magnetic field of an intensity to pinch said plasma toward the center of said body,

said means being operated to apply an electric field to said body of a magnitude sufficient to produce a current through said body exceeding the value

$$I = \frac{2ck(T_e + T_h)}{ev}$$

where k is Boltzmann's constant, c is the velocity of light in vacuum, T_e and T_h are the mean kinetic temperatures respectively of the electrons and holes in the plasma current, v is the electron drift velocity, e is the constant corresponding to the charge on the electron, and I is the current in electromagnetic units,

and means to apply a second magnetic field to said body to control the amount by which said plasma is pinched.

3,396,284
ELECTRIC GUITAR BRIDGE
Robert C. Scherer, Cincinnati, Ohio, assignor to D. H. Baldwin Company, Cincinnati, Ohio, a corporation of Ohio
Filed Aug. 30, 1965, Ser. No. 483,679
10 Claims. (Cl. 310—8.3)

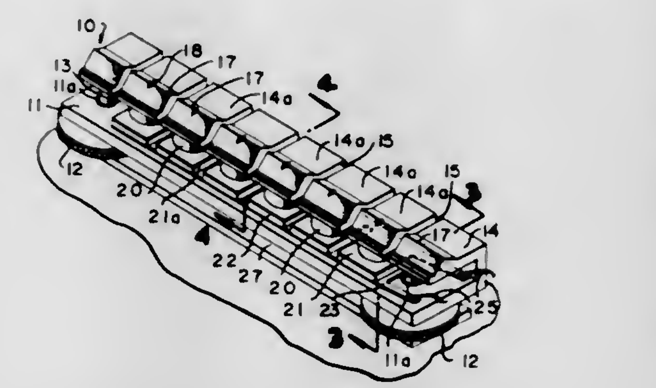

1. In a transducer bridge for a stringed instrument,

a member having a flat base,

a plurality of cantilever arms extending parallel to said base,

each of said cantilever arms including a string locating element,

a piezo-electric crystal located intermediate each of said cantilever arms and said flat base, and in contact with said cantilever arms,

a layer of electrically conductive material underlying and in contact with said piezo-electric crystals,

an electrical and acoustic insulating layer underlying said layer of electrically conductive material, and

a further layer of electrically conductive material underlying said electrical and acoustic insulating layer and in contact with said base.

3,396,285
ELECTROMECHANICAL TRANSDUCER
Hildegard M. Minchenko, Reynoldsburg, Ohio, assignor to The Board of Trustees of the Ohio State University, an institution of higher learning, Columbus, Ohio
Filed Aug. 10, 1966, Ser. No. 571,490
15 Claims. (Cl. 310—8.7)

The present invention is for a piezoelectric transducer capable of delivering extremely high power, i.e., measurable in horsepower (or kilowatts) at an acoustical frequency range. The principle underlying the high-power output is in the structural arrangement of the components

immediately associated with the piezoelectric driving elements. In theory and practice the piezoelectric elements are under radial and axial pressure that assure that they do not operate in tension even under intense sonic action. Significantly, the structural design of the transducer of the present invention, that permits the extraordinary

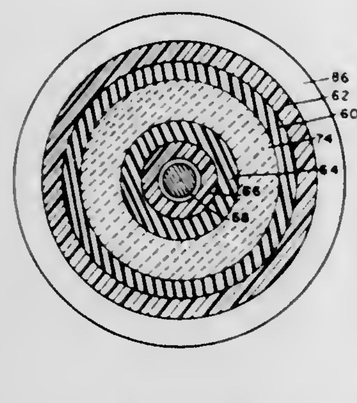

power output from the driving elements, resides in the novel method of clamping the piezoelectric elements both radially and longitudinally (axially). In this way the acoustic stresses in the piezoelectric elements are always compressive, never tensile, even under maximum voltage excitation.

3,396,286
TRANSDUCER ASSEMBLY FOR PRODUCING ULTRASONIC VIBRATIONS
James W. Anderson, State College, Steve Heny, Hublersburg, and Bobby L. Joyner, State College, Pa., assignors of one-half to Linden Laboratories Inc., State College, Pa., and one-half to Edward G. Cook, Yardley, Pa.
Filed Jan. 21, 1965, Ser. No. 426,985
4 Claims. (Cl. 310—9.1)

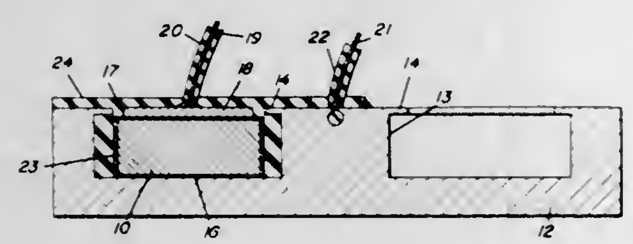

A transducer assembly for producing ultrasonic vibrations, comprising a metal housing having at least one well therein, a polycrystalline piezoelectric element in said well having one face against the bottom of the well and in electrically conductive relationship with said housing, a first electric conductor electrically coupled to said housing, a second electrical conductor electrically coupled to a face of said element opposite said one face, a coating of insulation material on said element, and a high shear strength potting compound around said element in said well and filling said well and covering said well where it opens out of said housing.

3,396,287
CRYSTAL STRUCTURES AND METHOD OF FABRICATING THEM
William H. Horton, Orlando, Fla., assignor to Piezo Technology Inc., Orlando, Fla., a corporation of Florida
Filed Sept. 29, 1965, Ser. No. 491,456
4 Claims. (Cl. 310—9.1)

A crystal structure wherein the blank of piezoelectric material is lapped to provide a predetermined fundamental frequency and has electrodes plated on opposite sides thereof. A blank of substrate material having an aperture in it which is larger than the electrodes is affixed directly to one or both sides of the blank of piezoelectric material, with the apertures therein axially aligned with the electrodes. Lead attachments are provided, for connec-

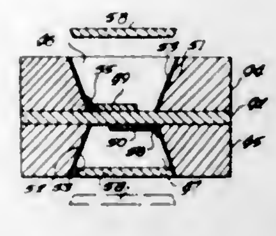

tions to the electrodes, and cover plates can be fixedly secured atop each of the blanks of substrate material, for sealing the electrodes within the cavities formed by the apertures.

3,396,288
ELECTRIC MOTOR HAVING A FRUSTO-CONICAL ROTOR PORTION
Leonida Patrignani, Florence, Italy, assignor to Manufacture de Vilebrequins de Lorette (Mavilor), Lorette, Loire, France
Filed Dec. 4, 1964, Ser. No. 415,909
Claims priority, application France, Dec. 13, 1963, 957,100
14 Claims. (Cl. 310—43)

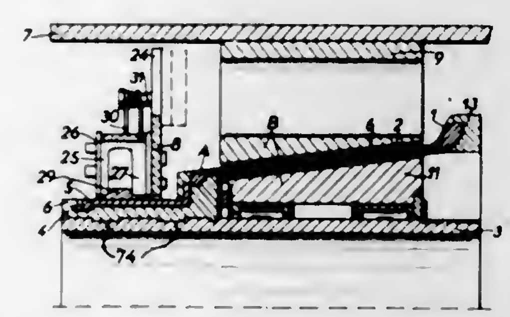

A low inertia, high speed electric motor is provided with a frusto-conical rotor of synthetic resin. The rotor includes a conical portion encompassing the rotor windings and a cylindrical portion encompassing the collector blades. The motor also includes a stator portion surrounding said rotor portion and a magnetic member mounted inside said rotor portion to provide a magnetic circuit passing through said rotor windings. The frusto-conical shape of the rotor permits ready adjustment of the air gap by longitudinal displacement of the rotor between the stator and the magnetic member.

3,396,289
INFINITELY VARIABLE SPEED DRIVE
Enakichi Hayasaka, 13 1-chome, Kaminakazato, Kita-ku, Tokyo, Japan
Filed July 16, 1965, Ser. No. 472,559
10 Claims. (Cl. 310—92)

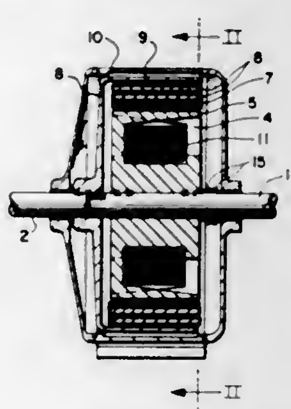

An infinitely variable speed drive having coaxial input and output shafts. A coil on the input shaft generates a rotating magnetic field, and an armature on the output

shaft surrounds the coil and is formed with a circumferential row of windows extending axially therethrough. Series-connected armature windings pass through the windows and respectively over the outer and inner faces of the armature in such a manner that the de-magnetizing effect of the current induced in the armature windings by the rotating magnetic field is neutralized in a region of the armature proximate to the field.

3,396,290
CONCENTRIC STATOR WINDINGS AND METHOD OF WINDING
Robert W. Peters, Menomonee Falls, Wis., assignor to Henry J. Gorski, Milwaukee, Wis.
Filed Oct. 20, 1965, Ser. No. 498,633
8 Claims. (Cl. 310—180)

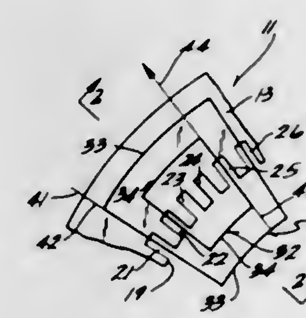

1. A stator winding comprising first and second concentrically arranged coils having span portions of respectively greater and lesser arcuate length, said span portion of said first coil being generally at a first radial distance from the axis of the stator, and said span portion of said second coil being located at a second radial distance from the axis of the stator less than said first radial distance.

3,396,291
ALTERNATING CURRENT GENERATORS
William Murray Somerville, Newcastle-upon-Tyne, England, assignor to Clarke, Chapman & Co. Limited, Durham, England, a company of Great Britain and Northern Ireland
Filed Dec. 7, 1965, Ser. No. 512,112
Claims priority, application Great Britain, Dec. 10, 1964, 50,318/64
10 Claims. (Cl. 310—263)

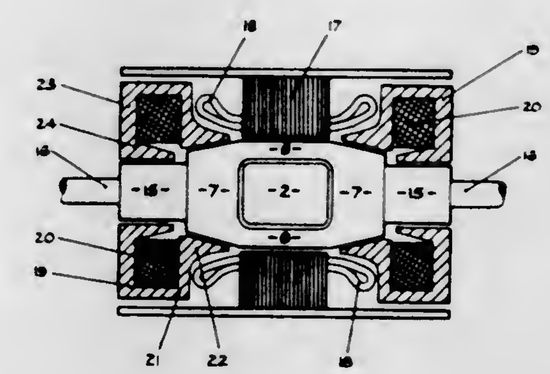

1. A solid rotor for a high speed electric alternator, comprising firstly a ferromagnetic element having at the middle portion of its length at least one radial pole projection, a solid cylindrical portion on each side of said middle portion, a further portion in the form of a solid of revolution beyond each of said cylindrical portions, and a bearing trunnion at each end; and secondly a yoke comprising two enantiomorphic ferromagnetic ring elements each having at least one recess to accommodate one half of said radial pole projection and, to surround one of said solid cylindrical portions, a continuous end having an external periphery with a reducing taper outwardly from said recess, the two yoke elements being secured together at the median plane where they abut each other by the peripheral surface extending between the circumferential limits of the registering recesses in the two yoke elements; said three elements jointly affording a continuous gap between their opposed internal surfaces, which gap is transverse to the axis at each end of said pole projection parallel to the axis at each side of said pole projection and otherwise circumferential; and a non-magnetic material with which said gap is filled to bond the ferromagnetic elements together as a unitary rotor.

3,396,292
CIRCUIT ARRANGEMENT FOR FEEDING ELECTRICAL APPARATUS BY WAY OF A TRANSISTOR CIRCUIT
Gerrit Jan Lansink, Enschede, Netherlands, assignor to N.V. Hollandse Signaalapparaten, Hengelo, Netherlands, a firm
Filed Mar. 4, 1965, Ser. No. 437,194
Claims priority, application Netherlands, Mar. 6, 1964, 6402259
4 Claims. (Cl. 307—202)

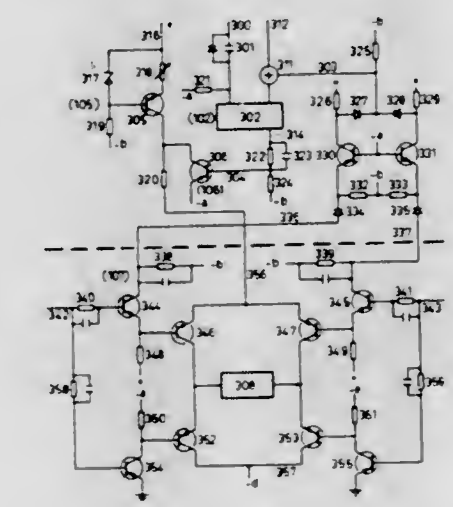

A circuit for the protection of a load supplied by a constant current source using a first transistor having its collector-emitter path connected in series with a load and showing an increase in base current in response to load voltages increasing above a normal level. A bistable trigger responds to the increase in base current of the first transistor by reversing its state, forward biasing a second transistor having its collector-emitter path connected as a shunt across the constant current source, thereby preventing source currents from reaching the load. The low impedance path provided by the second transistor in response to rising load voltages prevents the source from generating abnormally high voltages.

3,396,293
VARIABLE WIDTH PULSE GENERATOR
William B. Harris, Bernardsville, N.J., assignor to Bell Telephone Laboratories Incorporated, New York, N.Y., a corporation of New York
Filed Jan. 18, 1966, Ser. No. 521,306
9 Claims. (Cl. 307—268)

7. In combination in a pulse generator,
a direct-current source,
a load,
a capacitor,
first controlled means connected to said source for resonantly charging said capacitor to a voltage that exceeds that of said source,

second controlled means connected in series with said source and said load,

third controlled means for applying the voltage across said capacitor to said second means,

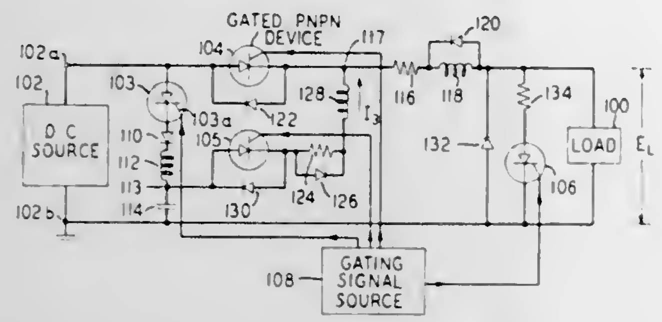

and fourth controlled means connected across said load and adapted to be energized to define the termination of an output pulse.

3,396,294
VIBRATORY MOTOR
Shinobu Makino, Tokyo, Japan, assignor to Shinko Electric Co., Ltd., Tona, Mie-ken, Japan, a company of Japan
Continuation-in-part of application Ser. No. 429,564, Feb. 1, 1965. This application Oct. 5, 1967, Ser. No. 677,828
Claims priority, application Japan, June 29, 1964, 39/37,124, 39/37,125
6 Claims. (Cl. 310—81)

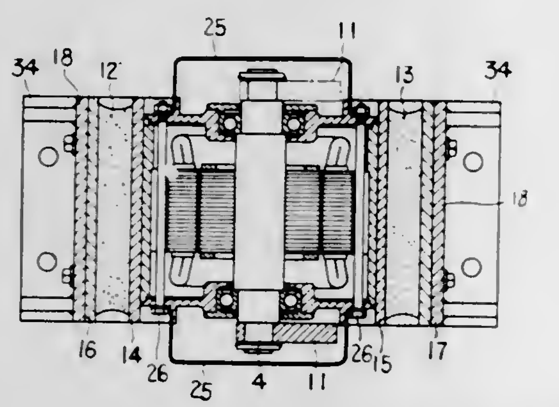

A unidirectional vibratory motor comprises an electric motor having a rotary shaft, an eccentric weight received on the motor shaft and a frame surrounding and spaced from the electric motor. A pair of elastomeric bodies are disposed between the motor and the frame on opposite sides of the motor. The two elastomeric bodies are approximately parallel to each other and to the motor shaft. Each of the elastomeric bodies has an inner face secured to the motor and an outer face secured to the frame. The natural frequency of vibration of each elastomeric body in the direction of a shear plane approximately midway between the inner and outer face of the body is lower than that in a direction perpendicular to the shear plane. A large amplitude of vibration is thereby obtained in the direction of said shear planes.

3,396,295
ROTARY ELECTRIC MACHINES
Gordon Hindle Rawcliffe and William Fong, Bristol, England, assignors to National Research Development Corporation
Filed Oct. 15, 1965, Ser. No. 496,465
Claims priority, application Great Britain, Oct. 19, 1964, 42,575/64
13 Claims. (Cl. 310—162)

A two-speed reluctance motor having a stator which carries a pole-changing winding, for example a 3-phase, pole-amplitude modulation, pole-changing winding. The rotor has flux-barriers adapted to both alternative stator

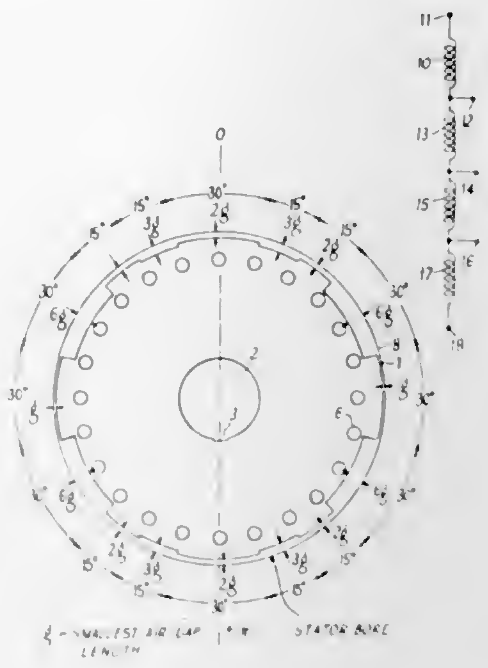

winding pole-numbers. Particularly, the rotator angular permeance distribution is defined by the expression:

$$P_o + P_x \cos X\theta + P_y \cos y\theta$$

where the alternative pole-numbers are x-poles and y-poles and P_o, P_x and P_y are different permeance coefficients. Further, multiple-speed reluctance motors are disclosed.

3,396,296
ELECTRIC MOTORS AND GENERATORS
Ernie B. Esters, 1456 Burlingame, Detroit, Mich. 48206
Continuation-in-part of application Ser. No. 326,770, Nov. 29, 1963. This application June 5, 1967, Ser. No. 643,662
7 Claims. (Cl. 310—266)

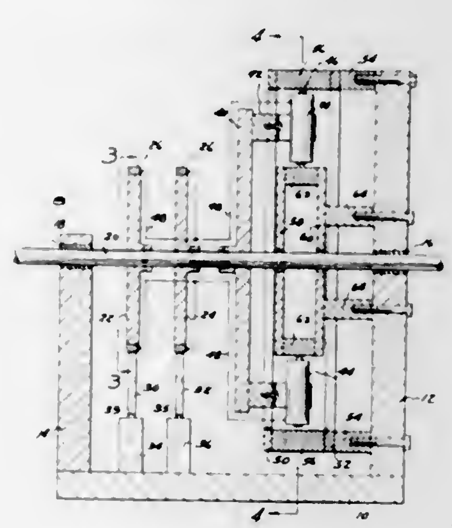

Electric motors and generators having coaxial inner and outer stators each stator being provided preferably with magnetic flux producing permanent magnets. The rotor is disposed in the magnetic gap between the inner and outer stators and comprises radially disposed interconnected individual coils or longitudinally oriented core wound coils with appropriate pole pieces or, alternately, an S-skein continuous winding provided with magnetic flux channelling members.

3,396,297
MULTIPLE ELECTRON GUN STRUCTURE FOR CATHODE RAY TUBE
Glen A. Burdick, Waterloo, N.Y., assignor to Sylvania Electric Products Inc., a corporation of Delaware
Filed May 31, 1966, Ser. No. 553,752
5 Claims. (Cl. 313—70)

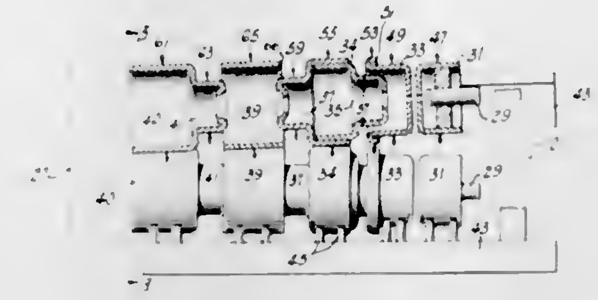

A cathode ray tube multiple gun structure which comprises a plurality of related unipotential low-voltage focusing lens guns employing overlapping focusing electrodes. In each gun the plurality of successive cylindrical electrodes are axially aligned in sequential order from an end or first electrode having an external alignment diameter. Each successive electrode therefrom has an external maximum diameter which at least equals the maximum external diameter of the preceding electrode. Such structure provides a compact and improved multiple electron gun construction exhibiting enhanced election optics and alignment.

3,396,298
SERIES CONNECTED HEATER ELEMENT FOR MULTIPLE ELECTRON GUN SUBASSEMBLY
Alan T. Kuryla, Geneva, N.Y., assignor to Sylvania Electric Products Inc., a corporation of Delaware
Filed Nov. 1, 1966, Ser. No. 591,166
5 Claims. (Cl. 313—70)

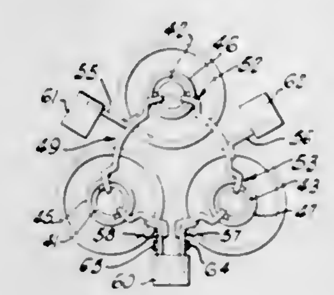

A series connection of the heater elements of a three-electron gun subassembly is provided by preforming a heater element connecting strap having three elongated protuberances, each defining a removable area. The connecting strap is secured to insulating support rods of the gun assembly so that each protuberance is supported in a fixed spatial relation to one of the cathode elements to permit the connection of the respective heater elements across the protuberance such that a series connection is completed when the removable area of each protuberance is cut out.

3,396,299
MAGNETIC FLUX LEAKAGE GUIDE FOR MAGNETIC ELECTRON LENSES
Takashi Yanaka, Tokyo, Japan, assignor to Nihon Denshi Kabushiki Kaisha, Tokyo, Japan
Filed May 25, 1965, Ser. No. 458,664
Claims priority, application Japan, June 15, 1964, 39/34,229; July 4, 1964, 39/38,431
7 Claims. (Cl. 313—84)

A magnetic flux leakage guide for aligning asymmetrical magnetic leakage flux created in a gap between two lenses or within electron lenses themselves, said leakage flux guide comprising a magnetic element and a nonmag-

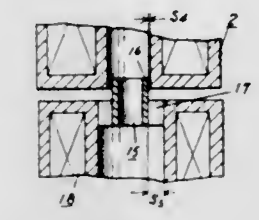

netic member creating a gap between the magnetic element and the lens.

3,396,300
PROPORTIONAL COUNTER TUBE HAVING A PLURALITY OF INTERCONNECTED IONIZATION CHAMBERS
Charles S. Bowyer, Hyattsville, Md., assignor to the United States of America as represented by the Secretary of the Navy
Filed Dec. 30, 1965, Ser. No. 517,873
9 Claims. (Cl. 313—93)

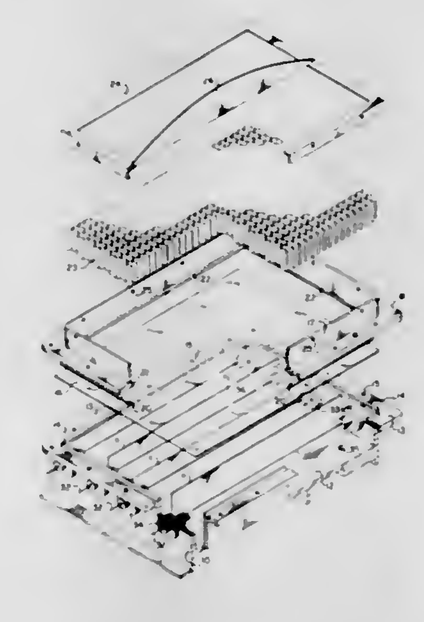

This invention is directed to a proportional counter suitable for detecting X-ray radiation in a range of from about 1 to about 8 angstrom units. The device includes a single housing within which a plurality of anode sections are assembled. A honeycomb collimator provides 10° total collimation for incident radiation and a single window covers all of the anode sections.

3,396,301
GAS LASER TUBE HAVING A HOLLOW ELONGATED CATHODE ELECTRODE
Haruhiro Kobayashi and Taizo Oikado, Tokyo, Japan, assignors to Nippon Electric Company Limited, Tokyo, Japan, a corporation of Japan
Filed Apr. 7, 1965, Ser. No. 446,167
Claims priority, application Japan, Apr. 20, 1964, 39/23,091
7 Claims. (Cl. 313—210)

A gas laser tube having elongated cathode and anode electrodes to greatly enhance the laser output. The cathode electrode is substantially cylindrical in shape and is provided with a slit running its entire length and being substantially perpendicular to the longitudinal axis of the cathode. The anode is a slender, elongated wire or rod

shaped electrode arranged substantially parallel to the cathode longitudinal axis and spaced by a distance substantially equal to the inner diameter of the cylindrical shaped cathode so as to be positioned within the elongated

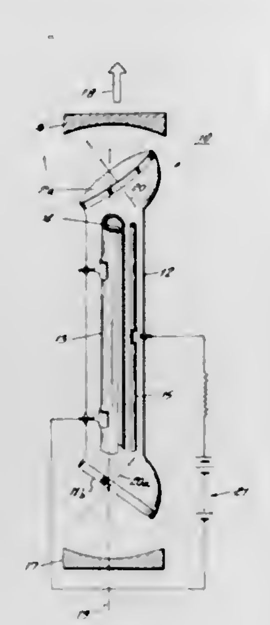

slit provided in the cathode. The electrodes provide a strong glow discharge which is uniform over the entire length of the cathode member.

3,396,302
ELECTRONIC TUBE WITH EVAPORATION-PROOF CATHODE AND ELECTROMAGNETIC ELECTROSTATIC AND HEATED GRIDS CONTROLS
Henry Greber, 225 W. 80th St., Apt. 8–D, New York, N.Y. 10024
Filed Aug. 5, 1966, Ser. No. 570,609
1 Claim. (Cl. 313—300)

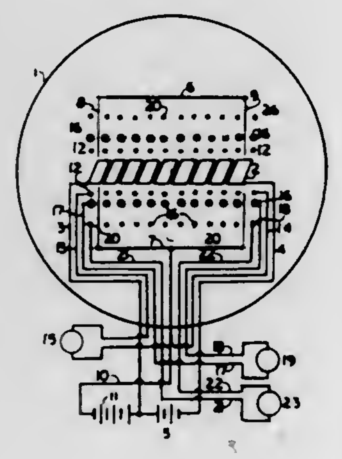

This invention relates to an electronic tube whose cathode is protected against evaporation by that it consists at least of two parts emitting particles toward each other. The current of this electronic tube can be controlled by means of three grids: first, an electrostatic grid deviating, by electrostatic repulsion, the electron beam from the anode, second, an electromagnetic grid consisting of a coil acting as a blowout coil preventing the electron beam from reaching the anode, third, a heated electron-emitting grid, whose electrons collide with those of the controlled electron beam. The anode consists of saw-tooth shaped straps, or wave shaped wires connected between two circular conductors, so that when the controlled electron beam is deviated a smaller part of it is intercepted by the anode.

3,396,303
ARC ELECTRODE OF GRAPHITE WITH BALL TIP
William A. Gordon, Strongsville, Ohio, assignor to the United States of America as represented by the Administrator of the National Aeronautics and Space Administration
Filed Mar. 21, 1966, Ser. No. 537,617
3 Claims. (Cl. 313—352)

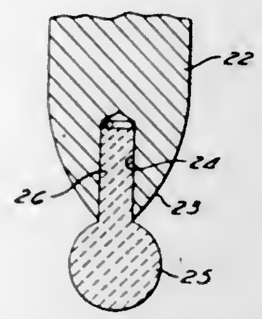

An arc source for emission spectroscopic analyses in which the cathode electrode comprises a graphite post having a globular tantalum tip.

3,396,304
AUTOMATIC FOCUSING SYSTEM FOR CATHODE RAY TUBES
Melvin G. Wilson, Rochester, Minn., assignor to International Business Machines Corporation, Armonk, N.Y., a corporation of New York
Filed Feb. 16, 1966, Ser. No. 527,946
7 Claims. (Cl. 315—10)

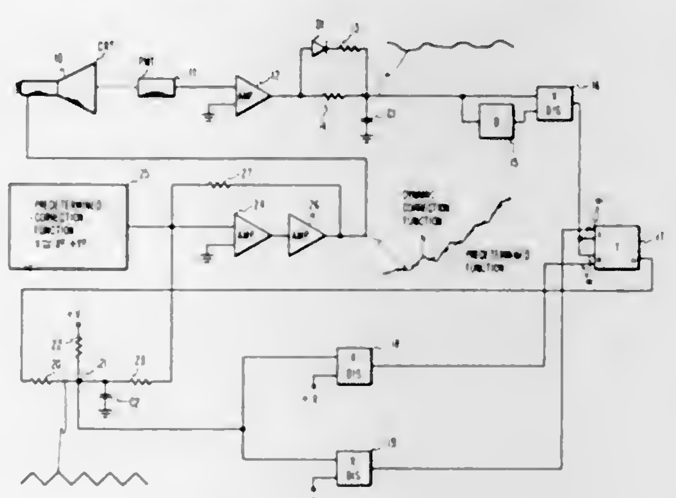

1. Automatic focus correction apparatus for cathode ray tubes comprising:
   means for detecting positive and negative time rate of changes of phosphor noise as the beam is deflected from point to point on the face of said cathode ray tube,
   focus voltage generating means for developing a bi-directional focusing voltage, and
   focus voltage control means responsive to negative time rate of changes in phosphor noise to cause said focus voltage generating means to change direction of said focusing voltage.

3,396,305
IMAGE PROJECTION DEVICE
Charles L. Buddecke, Fullerton, William E. Meyer, Buena Park, and Randall S. Stites, Costa Mesa, Calif., assignors to North America Rockwell Corporation, a corporation of Delaware
Filed May 4, 1965, Ser. No. 453,125
11 Claims. (Cl. 315—12)

Image projection apparatus for converting electric signals into an optical image. In an electron-beam tube device for influencing a beam of polarized light, there is provided a birefringent electro-optic material, one face of which is sealingly coated with a locally secondarily

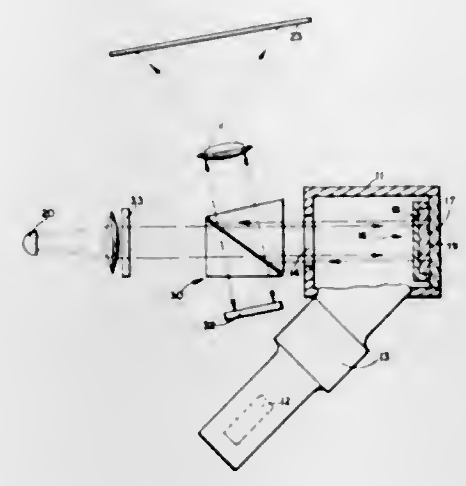

emissive film of one of silicone monoxide/dioxide and magnesium flouride and not exceeding a thickness of 15,000 angstroms.

3,396,306
CIRCUIT ARRANGEMENT FOR PRODUCING A PULSE SUBSEQUENT TO A TRANSIENT SETTING OPERATION
Rainer Mallebrein, Constance, Germany, assignor to Telefunken Patentverwertungs-G.m.b.H., Ulm (Danube), Germany
Filed May 27, 1964, Ser. No. 370,622
Claims priority, application Germany, June 8, 1963, T 24,120
5 Claims. (Cl. 315—22)

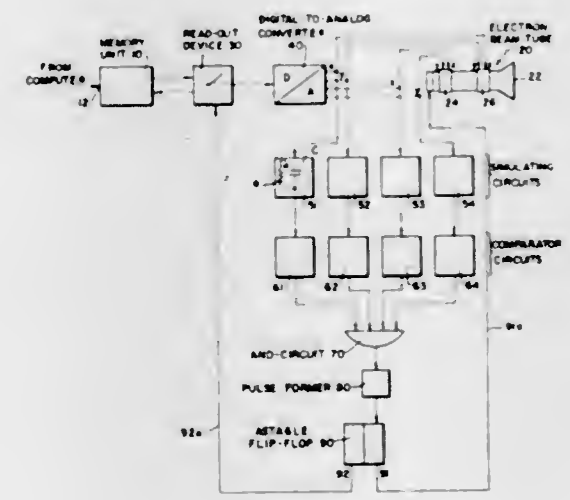

A circuit for producing a signal subsequent to a setting operation, in which the setting is brought about by an abrupt voltage change which brings the setting through a generally exponential transient condition toward a final value. The transient condition is simulated, for example, in a differentiating circuit which has the voltage change applied to it, there being a comparator connected to receive the output of the device which simulates the transient condition, the purpose of the comparator being to determine when the simulated transient condition approaches the final value upon the attainment of which the signal is to be produced. Finally, means are provided for deriving the signal from the output of the comparator.

3,396,307
TRANSISTOR INVERTER LAMP BALLASTING CIRCUIT
John H. Campbell, Mentor, Ohio, assignor to General Electric Company, a corporation of New York
Continuation-in-part of application Ser. No. 411,484, Nov. 16, 1964. This application Apr. 17, 1967, Ser. No. 642,617
2 Claims. (Cl. 315—221)

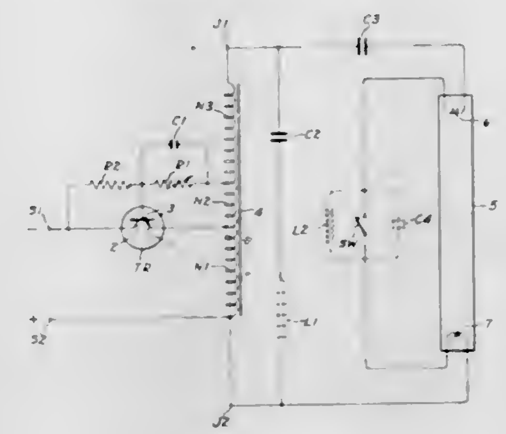

A single transistor inverter circuit for operating fluorescent lamps from a direct current source. The transistor is connected, in series with the primary winding of an autotransformer, across the D.C. supply with a feedback connection from transformer secondary to base electrode. The load circuit comprises the lamp connected in series with a capacitor across the transformer secondary. A shunt capacitor is connected across the transformer secondary for load regulation under open circuit conditions when excessively high voltages might damage the transistor.

3,396,308
WEB TREATING DEVICE
Thomas Clement Whitmore, Rochester, N.Y., assignor to Eastman Kodak Company, Rochester, N.Y., a corporation of New Jersey
Filed July 2, 1965, Ser. No. 469,157
3 Claims. (Cl. 317—4)

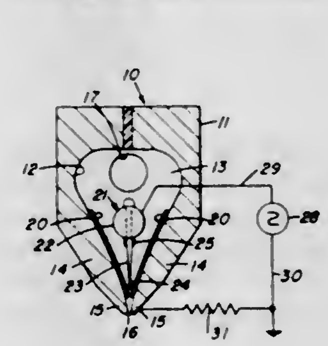

A device for generating a flow of ionized gas which is provided with an opening through which the gas is directed toward a surface of a sheet of dielectric material for altering the electrostatic condition thereof. The device is grounded through a resistor connected to electrically conductive portions adjacent the opening for directionally increasing the flow of ionized gas through the opening.

3,396,309
TRANSISTORIZED DEFLECTION SYSTEM WITH PROTECTIVE MEANS
Paul G. Wolfe, Oreland, Pa., assignor to Philco-Ford Corporation, Philadelphia, Pa., a corporation of Delaware
Filed Oct. 19, 1965, Ser. No. 497,820
8 Claims. (Cl. 317—20)

Deflection system with transistor protection means comprising circuit for draining energy from system if

peaks of flyback pulses exceed threshold. Circuit may comprise diode connected either to tap on high voltage

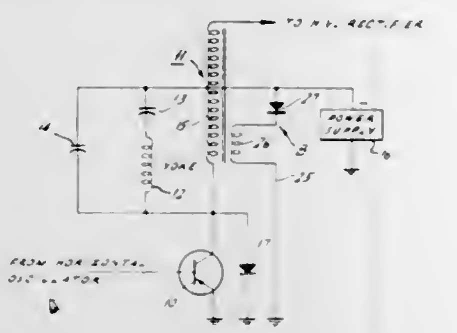

winding or in series with auxiliary winding of deflection transformer.

3,396,310
STATIC REVERSE POWER RELAY
Frank G. Logan, Bowie, Md., assignor to the United States of America as represented by the Secretary of the Navy
Filed Mar. 30, 1966, Ser. No. 538,936
5 Claims. (Cl. 317—39)

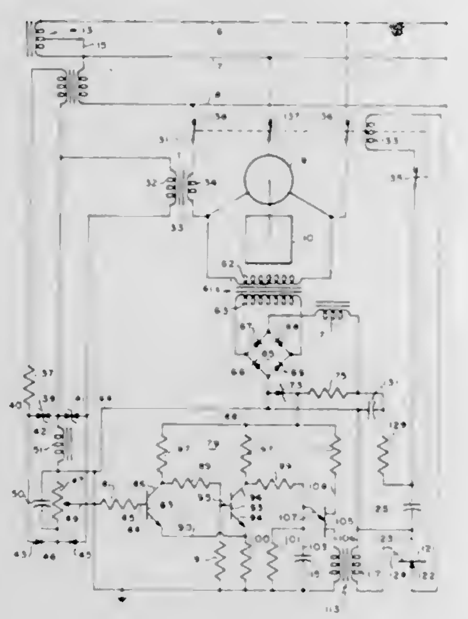

A system for sensing reverse power in an electrical generating system by comparing the phase relationship between the voltage across the generator and the current flowing through the generator. Reverse power in the system causes voltage and current to be 180° out of phase. A solid state phase sensing network generates a signal proportional to this phase relationship. When the output of the phase sensing network exceeds a predetermined amount a mono-stable network is triggered which in turn fires a silicon rectifier which causes a generator to be disconnected from the system.

3,396,311
PIEZO-ELECTRIC SPARK IGNITER
Wolfgang Maltner, Oberstedten, Taunus, and Horst Dieterle, Frankfurt am Main, Germany, assignors to Heinrich Maltner, G.m.b.H., Offenbach am Main, Germany
Original application Sept. 21, 1964, Ser. No. 397,801, now Patent No. 3,350,608, dated Oct. 31, 1967. Divided and this application June 20, 1967, Ser. No. 647,559
Claims priority, application Germany, Sept. 21, 1963, M 58,290
9 Claims. (Cl. 317—81)

A piezo-electric igniter includes a tranducer crystal having a pair of poles and stress generating means which is arranged to subject the crystal to compressive stresses in direction of its piezo-electric axis so that the crystal generates a voltage. The stress generating means comprises actuating means movable from a starting position to a second position to thereby effect compression of the crystal. A pair of electrodes is normally in current-con-

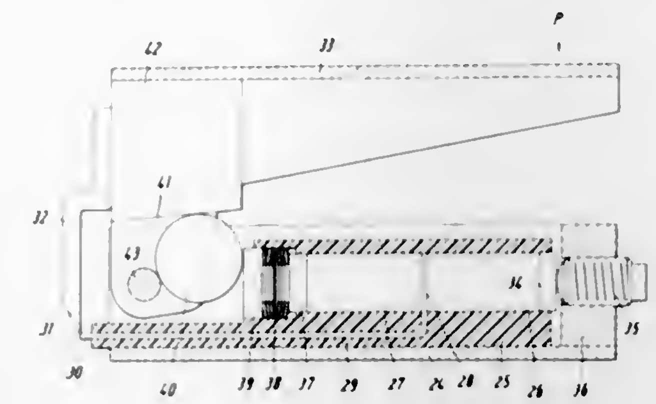

ducting contact with each other and are each connected with one of the poles to short-circuit the crystal. One of the electrodes is movable away from the other electrode in response to movement of the actuating means from the starting position to thereby terminate the current-conducting connection between the poles.

3,396,312
AIR-ISOLATED INTEGRATED CIRCUITS
James A. Cunningham, Dallas, and Elias G. Hanna, Garland, Tex., assignors to Texas Instruments Incorporated, Dallas, Tex., a corporation of Texas
Filed June 30, 1965, Ser. No. 468,227
6 Claims. (Cl. 317—101)

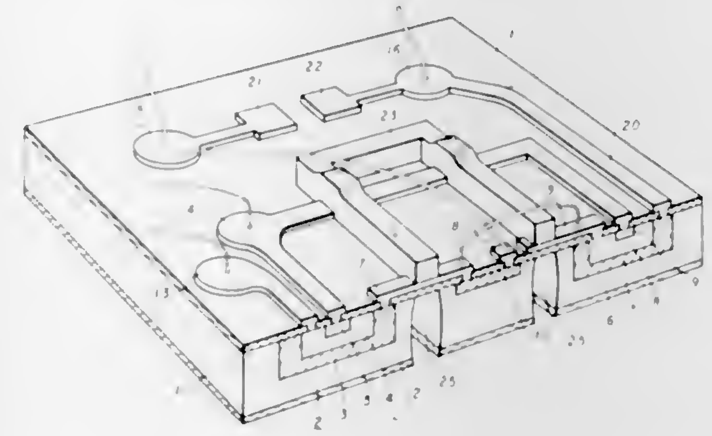

An integrated circuit device comprising a body having a plurality of semiconductor regions having coplanar faces. An insulating layer covers at least a portion of the surface. A layer of non-conductive material is disposed upon a portion of the insulating layer between selected ones of said semiconductor devices to mechanically strengthen the body.

3,396,313
PLUG AND SOCKET FOR THE MOUNTING OF AN ASSEMBLY OF ELECTRICAL COMPONENTS
Ivan Salisbury Payne, Basingstoke, England, assignor to Lansing Bagnall Limited, Basingstoke, England, a British company
Filed Sept. 23, 1966, Ser. No. 581,513
Claims priority, application Great Britain, Sept. 28, 1965, 41,031/65
3 Claims. (Cl. 317—101)

A unit comprising an assembly of electrical components has along one edge a row of plug contacts of strip form and a portion adjacent the said edge encapsulated in a

body of insulating material from which the plug contacts project, which body provides an integral open-mouthed hollow casing surrounding the plug contacts and extending for a depth at least equal to the amount by which the plug contacts project from the body, in combination with a

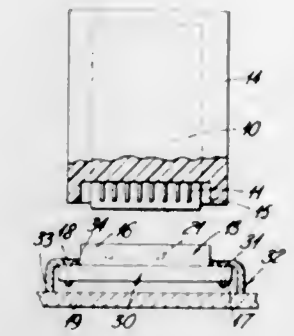

multi-contact edge connector having socket contacts which interengage with the plug contacts of the unit, the body of the connector being a sliding fit along both sides of the row of interengaging contacts within the open mouth of the integral hollow casing of the unit.

3,396,314
OVERDRIVE CIRCUIT FOR INDUCTIVE LOADS
Carl R. Corson, Northridge, and Paul Hoffman, Canoga Park, Calif., assignors to Radio Corporation of America, a corporation of Delaware
Filed Apr. 13, 1965, Ser. No. 447,824
3 Claims. (Cl. 317—148.5)

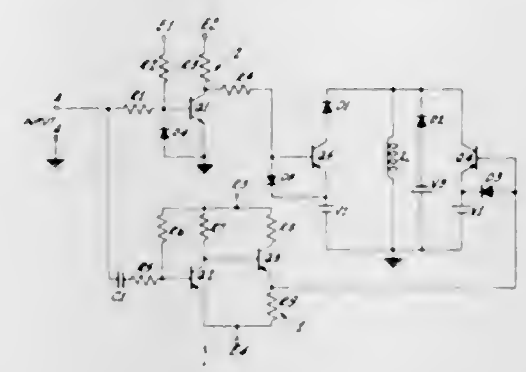

A transistorized solenoid driver circuit including first and second normally nonconductive transistor switches for respectively connecting first and second potentials in series with a current responsive impedance, the magnitude of the first potential being much larger than the magnitude of the second. First and second control circuits render both transistors conductive in response to an input signal having a leading and a trailing edge definitive of its duration. Means are provided to inhibit connection of the second potential to the load impedance while the first potential is connected thereto. A timing circuit is operative to render the first transistor nonconductive a predetermined time after the leading edge of the input signal. The inhibiting means ceases to operate at the predetermined time so that the second potential is connected to the load impedance for the remainder of the duration of the input signal.

3,396,315
ELECTROLYTIC CAPACITOR
Jordan Stokes III, % M.E.C. Inc., 1204 Sudikum Bldg., Nashville, Tenn. 37219
Filed Apr. 6, 1966, Ser. No. 540,752
4 Claims. (Cl. 317—230)

An electrolytic capacitor cartridge is disposed in an open ended case with an insulator supporting a lead in the end of the case. A terminal conductor extends from the cartridge through the insulator where it is connected

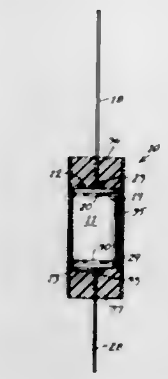

to the lead and insulative compound fills the end of the case.

3,396,316
COMPRESSION BONDED SEMICONDUCTOR DEVICE WITH HERMETICALLY SEALED SUBASSEMBLY
Joseph Wislocky, El Segundo, Calif., assignor to International Rectifier Corporation, El Segundo, Calif., a corporation of California
Filed Feb. 15, 1966, Ser. No. 527,610
3 Claims. (Cl. 317—234)

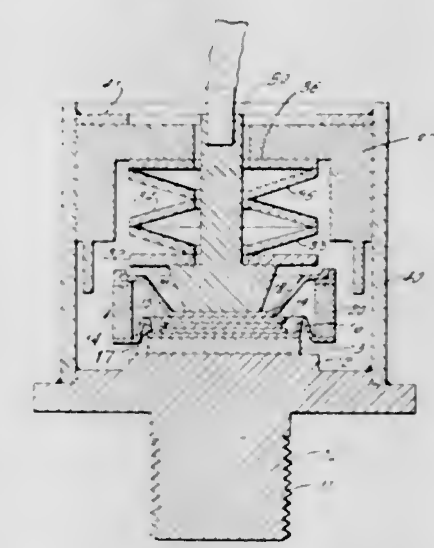

The invention provides a semiconductor disposed between two insulated contact plates in an hermetically sealed subassembly. A housing, including a support base, encloses the subassembly with spring means for maintaining the subassembly and a connecting stud in electrically operative position.

3,396,317
SURFACE-ORIENTED HIGH FREQUENCY DIODE
George D. Vendelin, Richardson, Tex., assignor to Texas Instruments Incorporated, Dallas, Tex., a corporation of Delaware
Filed Nov. 30, 1965, Ser. No. 510,491
5 Claims. (Cl. 317—234)

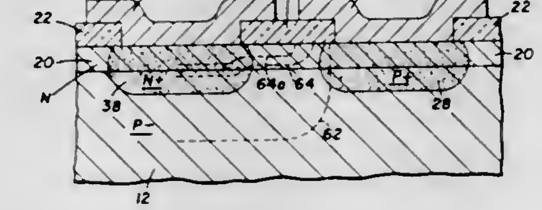

A diode structure is disclosed including a high resistivity substrate and a low resistivity epitaxial layer on one surface. A pair of opposite conductivity type regions are

provided extending through the low resistivity layer from one surface and into the high resistivity substrate. These opposite conductivity type regions are spaced with a portion of the low resistivity layer between them for forming a P–N junction.

3,396,318
CHARGED PARTICLE DETECTOR WITH LITHIUM COMPENSATED INTRINSIC SILICON AS AN INTERMEDIATE REGION
Ken-Tang Chow, Portola Valley, Calif., assignor to Electro-Nuclear Laboratories, Inc., Menlo Park, Calif., a corporation of Delaware
Continuation-in-part of application Ser. No. 280,783, May 16, 1963. This application Sept. 16, 1966, Ser. No. 584,305
3 Claims. (Cl. 317—234)

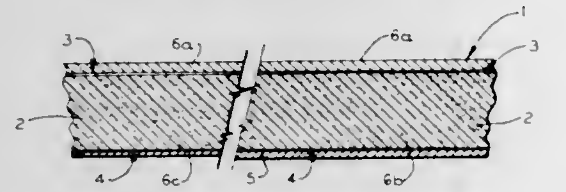

A high resolution charged particle detector is made from a reverse biased semiconductive wafer of lithium compensated intrinsic silicon by providing an n-type region at one surface and at an opposite surface, a shallow p-type region underlying a thin window for charged particle impingement.

3,396,319
THERMALLY FUSED CAPACITOR
William M. Robinson, New Bedford, Mass., assignor to Cornell-Dubilier Electric Corporation, a corporation of Delaware
Filed Mar. 8, 1965, Ser. No. 437,835
8 Claims. (Cl. 317—247)

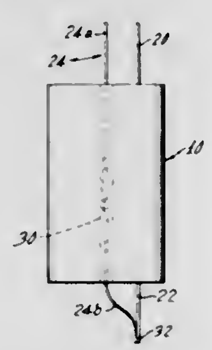

A thermally fused capacitor wherein the fuse, which is positioned within the hollow core of the winding, is separated by multiple layers of dielectric from the electrodes.

3,396,320
APPARATUS FOR MEASURING THE MOVEMENT OF A CYCLIC WAVE PATTERN WITH RESPECT TO A REFERENCE STRUCTURE AND FOR CONTROLLING THAT MOVEMENT
Richard Samuel Jonathan Good, Edinburgh, Scotland, assignor to Ferranti, Limited, Hollinwood, England, a company of Great Britain and Northern Ireland
Filed Nov. 20, 1964, Ser. No. 412,708
Claims priority, application Great Britain, Nov. 23, 1963, 46,335/63
4 Claims. (Cl. 318—18)

Closed-loop servo apparatus for controlling the movement of a cyclic pattern carried by a machine tool or other movable object in dependence on the phase difference between a cyclic command signal and a cyclic measurement signal obtained by sampling in turn and combining the outputs from detectors responsive to the pat-

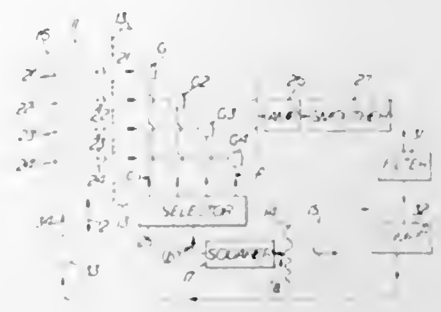

tern movement, the duration of each sample being dependent on the wavelength of the contemporaneous cycle of the command signal.

3,396,321
SYNCHRO SYSTEM HAVING SINGLE AND MULTIPLE SPEED TRANSMITTERS AND RECEIVERS
Louis Pellecchia, Brooklyn, N.Y., assignor to the United States of America as represented by the Secretary of the Navy
Filed Oct. 2, 1964, Ser. No. 401,280
4 Claims. (Cl. 318—24)

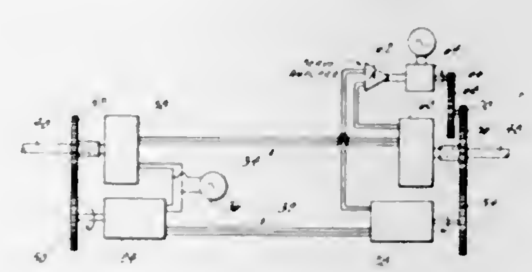

A synchro system employing a one-speed and a plural-speed transmitter whose rotors are geared to one input shaft, a one-speed and a plural speed receiver electrically coupled to the one-speed and plural-speed transmitters respectively, and are electrically coupled to servoing means and whose rotors are geared to the servoing means and to one output shaft.

3,396,322
STEPPING MOTOR DRIVE CIRCUIT INCLUDING DAMPING MEANS
George T. Shimabukuro, Monterey Park, Calif., assignor to Xerox Corporation, Rochester, N.Y., a corporation of New York
Filed Oct. 1, 1965, Ser. No. 492,221
4 Claims. (Cl. 318—138)

1. A drive circuit for a stepping motor with first and second drive coils responsive to alternate pulses of opposite polarity applied to said coils comprising:

a trigger flip-flop,
a push-pull driver amplifier,
means for coupling the output of said driver amplifier across said coils of said motor,
transformer means for coupling the output of said flip-flop to the input of said driver amplifier whereby each transition of said flip-flop momentarily energizes a different section of said push-pull driver amplifier thereby alternately delivering controlling current to a different one of said coils, and
direct current path means for individually coupling the output terminals of said flip-flop to a respective one of said inputs of said driver amplifier whereby

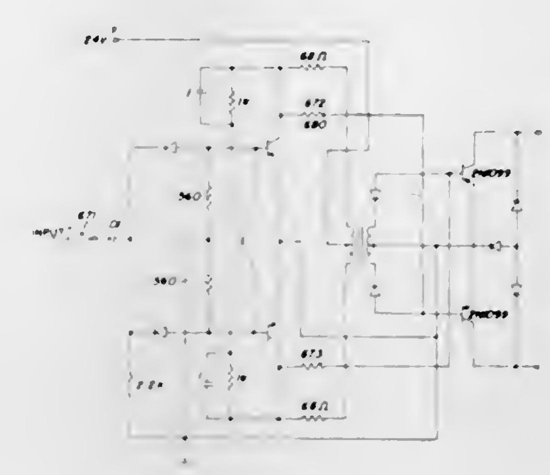

said driver amplifier continues to deliver a lesser value current to a drive coil after said transformer coupling means has ceased to be effective.

3,396,323
DIRECT CURRENT MOTOR SPEED CONTROL
Samuel H. Auld, Bloomfield Hills, Mich., assignor to Lear Jet Corporation, Wichita, Kans., a corporation of Delaware
Filed Sept. 27, 1965, Ser. No. 490,551
8 Claims. (Cl. 318—331)

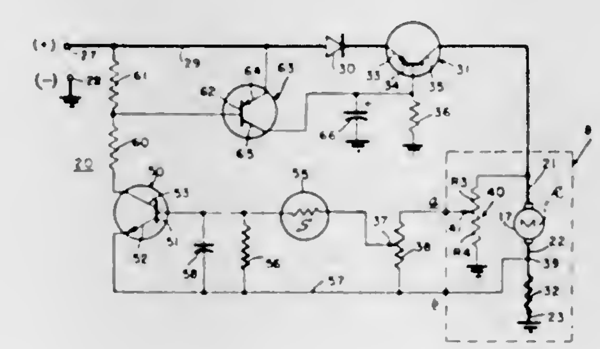

A magnetic tape transport is driven by a low voltage D.C. motor. A transistor in the armature circuit of the motor is regulated by proper bias to provide a precise control of speed by sensing the motor counter E.M.F. Rapid acceleration to the desired speed is provided by biasing the transistor into fully conductive state at startup.

3,396,324
DYNAMOELECTRIC MACHINE A.C.-D.C. CONVERTER SYSTEM
Nils Karlsson, Ragnar Lundqvist, Sven Nilsson, and Richard Sivertsen, Vasteras, Sweden, assignors to Allmänna Svenska Elektriska Aktiebolaget, Vasteras, Sweden, a corporation of Sweden
Filed Dec. 15, 1965, Ser. No. 514,048
Claims priority, application Sweden, Dec. 30, 1964, 15,813/64
3 Claims. (Cl. 321—28)

1. D.C. generator system comprising an A.C. generator, whose armature winding is divisible into twelve equal winding parts, the voltages of said winding parts being representable by twelve vectors of equal length, evenly distributed over an angle of 360°, and a system of rectifier bridges connected to the A.C. generator and dimensioned for full generator power, said winding parts being connected to form an even number of Y-connected, symmetrical three-phase systems turned 30° in relation to each other, 6-pulse rectifier bridges equal in number to the

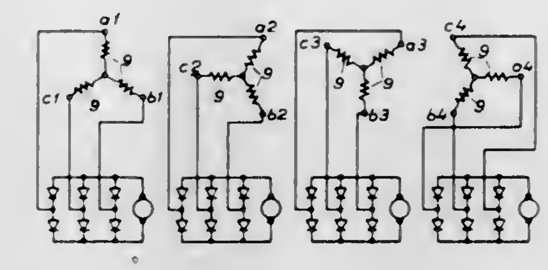

number of three-phase systems, each of said three-phase systems being connected to one of said 6-pulse rectifier bridges, at least the D.C. sides of the bridges being galvanically separated from each other.

3,396,325
VOLTAGE CONTROL OF PERMANENT MAGNET GENERATORS
Ralph E. Hopkins, 1006 Chestnut Ave., Falls Church, Va. 22042
Continuation-in-part of application Ser. No. 213,068, July 27, 1962. This application July 21, 1965, Ser. No. 477,349
7 Claims. (Cl. 322—46)

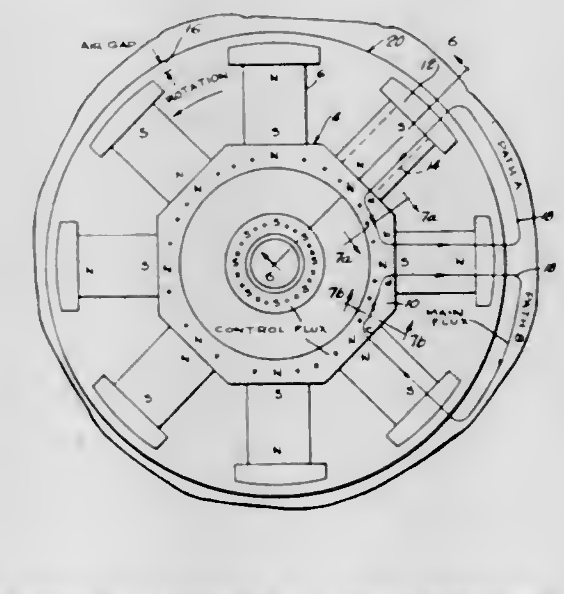

This invention is directed to control means for permanent magnet generators whereby the output voltage is substantially linear when subjected to varying operating speeds or to various load conditions. This is accomplished by a nonrotating control winding which will vary the reluctance or permeance of the magnetic path presented to the main magnetic poles of the generator. The control is accomplished by introducing, either vectorially or linearly, a control magnetomotive force in a part of the path of the magnetomotive force of the permanent magnets. An increase in the control force will increase the magnetomotive forces of the permanent magnets which causes the reduction of the output voltage of the generator.

3,396,326
VOLTAGE REGULATING CIRCUIT SUPPLYING CURRENT PULSES OF UNIFORM AMPLITUDE AND LENGTH
Le Verne A. Kisrow, Blaine, Minn., assignor to Contemporary Electronic Products Corp., Hopkins, Minn., a corporation of Minnesota
Filed Oct. 22, 1965, Ser. No. 501,156
5 Claims. (Cl. 323—9)

A voltage regulator employing a switching transistor interposed between a source of input voltage and out-

put terminals, the transistor being rendered conductive from time to time for periods the lengths of which are relatively constant as long as the input and output voltage remain relatively constant. An inductor and a current sensing resistor are connected in series with the

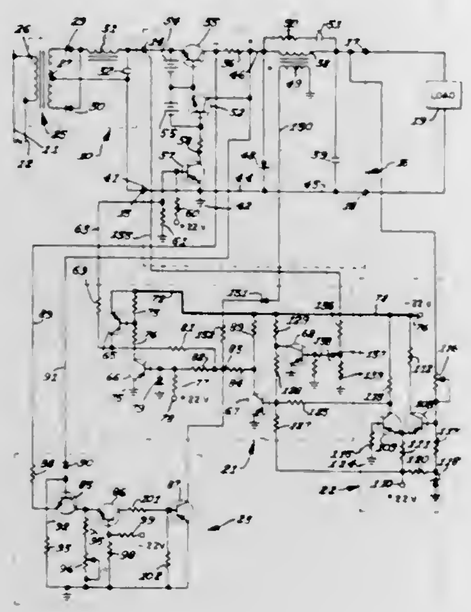

transistor and the transistor is turned off when the current through the resistor reaches a predetermined value. The transistor cannot again become conductive until the decay current of the inductor drops to a predetermined value and the output voltage is below a selected value.

3,396,327
THICKNESS SHEAR VIBRATION TYPE, CRYSTAL ELECTROMECHANICAL FILTER
Yuzo Nakazawa, Kohoku-ku, Yokohama-shi, Kanagawa-ken, Japan, assignor to Toyotsushinki Kabushiki Kaisha, Tsukakoshi, Kawasaki-shi, Japan, a joint-stock company of Japan
Filed Dec. 3, 1962, Ser. No. 241,747
Claims priority, application Japan, Dec. 27, 1961, 36/47,189
6 Claims. (Cl. 333—72)

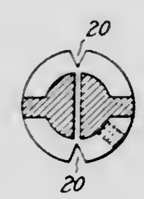

A high frequency electromechanical band pass filter comprises a thin piezoelectric crystal having an X-axis (electrical axis), Y-axis (mechanical axis) and Z-axis (optical axis) and having the characteristic of vibrating in the thickness shear mode of vibration with substantially all vibrational displacements in the X-axis direction. The crystal has parallel major faces and a plurality of electrodes on the major faces of the crystal. The electrodes comprise an input electrode and output electrode on the same face divided from one another along a center line perpendicular to the X-axis with parallel edges of the electrodes spaced from one another. The crystal may be circular with the electrodes semicircular and of lesser radius than the crystal. Notches provided in the perimeter of the crystal in line with the division between the electrodes preferably extend into the perimeter of the electrodes.

3,396,328
MAGNETORESISTIVE TRANSDUCER
Lloyd Tan-Wai Yuan, Los Angeles, Calif., assignor to Consolidated Electrodynamics Corporation, Pasadena, Calif., a corporation of California
Filed June 25, 1965, Ser. No. 467,061
3 Claims. (Cl. 323—75)

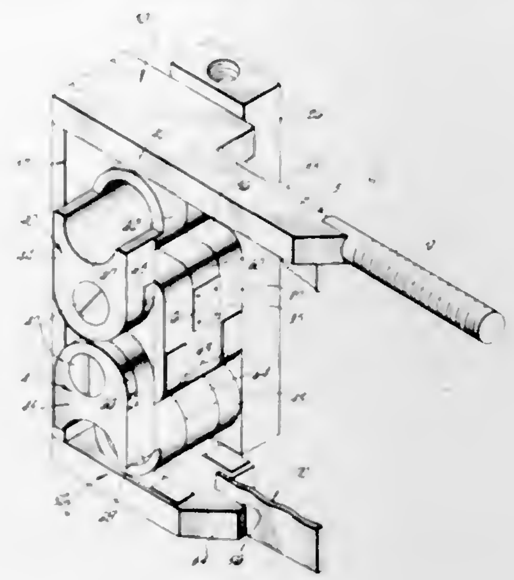

An instrument transducer such as a magnetoresistive transducer in which a signal is produced by linear movement of one element relative to a second element in response to movement of a phenomenon sensing member to which one of the elements is connected and in which linearity of relative movement between the elements is provided by a strapped roller mechanism assuring that movement of the two elements is only along the desired line and featuring low friction, low inertia properties.

3,396,329
MAGNETIC RESONANCE MAGNETOMETERS FOR MEASURING WEAK MAGNETIC FIELDS FROM ABOARD A MOVING VEHICLE, AS A PLANE
Antoine Salvi, Fontaine, France, assignor to Commissariat à l'Energie Atomique, Paris, France, an organization of France
Filed Apr. 20, 1966, Ser. No. 543,967
Claims priority, application France, Apr. 22, 1965, 14,224
3 Claims. (Cl. 324—.5)

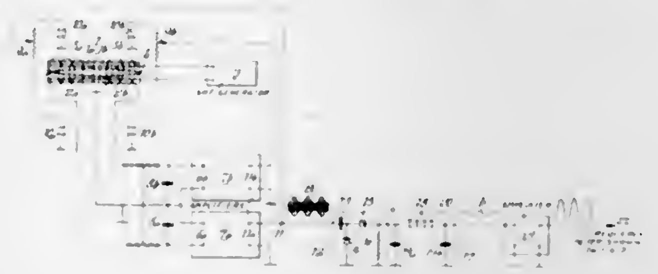

A magnetometer comprising: a vessel with two adjacent compartments, each containing a system of subnuclear particles, the particles in the different containers having different gyromagnetic ratios and therefore different resonance frequencies in the magnetic field in which they are located; a pair of pick-up coils oriented in parallel, each surrounding one of said compartments for picking up electromotive forces at the different resonant frequencies, said coils being coupled together for mixing said frequencies; a pair of excitation coils oriented perpendicularly to said pick-up coils for being decoupled therefrom, each of said pick-up coils delivering in one excitation coil through a linear high-gain amplifier; and a detector, connected to the output of one amplifier, feeding through a filter, a frequency meter in which is measured a frequency proportional to the intensity of the magnetic field, independent of the rotation of the vessel.

3,396,330
METHODS AND APPARATUS FOR TAKING THE LOGARITHM OF WELL LOGGING MEASUREMENTS UTILIZING A TIME DOMAIN TECHNIQUE
Jimmy Gerald Lee, Clamart, France, assignor, by mesne assignments, to Schlumberger Technology Corporation, Houston, Tex., a corporation of Texas
Filed Dec. 15, 1965, Ser. No. 514,006
3 Claims. (Cl. 324—6)

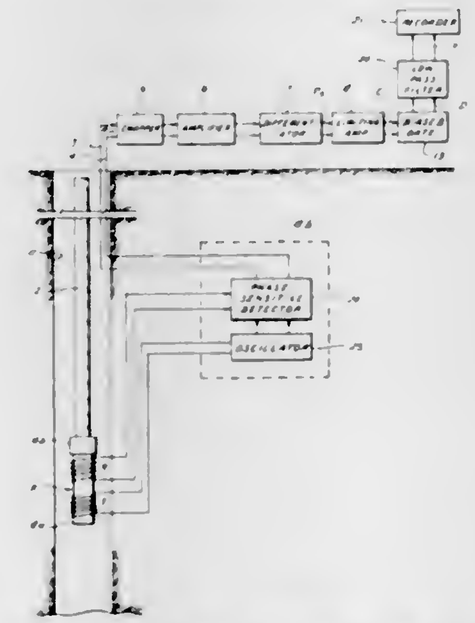

In accordance with an illustrative embodiment of the invention, a technique for taking the logarithm of well logging measurements is disclosed. The well logging measurements are chopped to provide square wave signals and the square wave signals are differentiated. The differentiated square wave signals are then limited in amplitude and applied to a biased gate arrangement which produces pulses during the positive and negative amplitude excursions of the differentiated square wave. The pulse width of these pulses is representative of the logarithm of the well logging measurements, which pulses are converted to a substantially DC signal whose amplitude is proportional to the logarithm of the well logging measurements.

3,396,331
METHOD OF AND APPARATUS FOR MEASURING THE ELECTRICAL CONDUCTIVITY OF A SOLUTION
Elmer A. Sperry III, Pompton Plains, N.J., assignor, by mesne assignments, to Beckman Instruments, Inc., Fullerton, Calif., a corporation of California
Filed Aug. 19, 1965, Ser. No. 480,857
8 Claims. (Cl. 324—30)

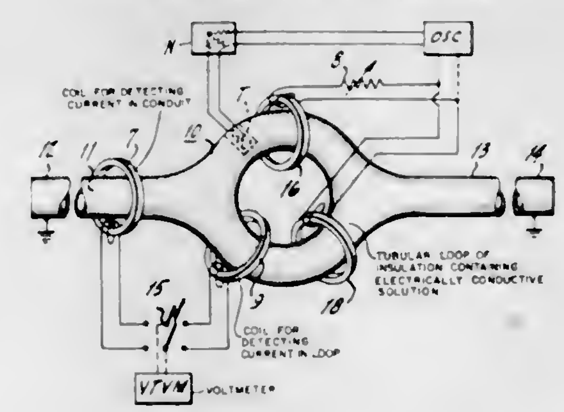

A method of and apparatus for determining the conductivity of an electrically conducting fluid, mud, slurry, oil and mixtures thereof with or without solids which utilizes a tubular closed loop containing the material to be measured, an alternating current input source coupled to a pair of spaced toroidal coils surrounding different portions of the loop, and means for measuring the flow of induced current in the material contained in the loop.

3,396,332
RESISTANCE MEASURING BRIDGE CIRCUIT HAVING AUTOMATIC BRIDGE BALANCING AND RANGE SELECTING MEANS
Edmund Abrahamson, 29 Primrose Lane, Roosevelt, N.Y. 11575
Filed Dec. 7, 1965, Ser. No. 512,053
17 Claims. (Cl. 324—62)

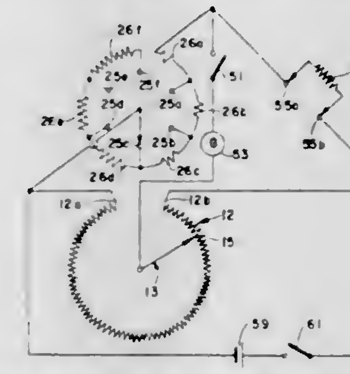

1. A bridge arrangement for determining the value of an unknown resistance comprising, in combination:
- a bridge circuit having four arms;
- means for connecting an unknown resistance into one arm thereof;
- a first variable resistance being connected in two arms thereof and having adjustable contact means for movement along the resistive path thereof, the position of said contact means defining the dividing point between the two arms of the bridge;
- a second variable resistance being connected in the other arm of the bridge and having adjustable contact means for movement to predetermined positions along the resistive path thereof;
- means for connecting detector means across two arms of the bridge circuit for detecting the balancing of said bridge arrangement;
- means for connecting a voltage source across another two arms of the bridge circuit; and
- means mechanically coupling said contact means of said first and second variable resistances for moving the contact means of one of said variable resistances from one position to another to vary the range of said bridge arrangement when the contact means of the other of said variable resistances has completed a traversal of the resistive path thereof.

3,396,333
ODOMETER SYSTEM FOR VEHICLES EMPLOYING A FREQUENCY DIVIDER
Hin Hung Ho, Kowloon, Hong Kong, and John Alexandre Sherrington, Godalming, and James Bernard Vousden, St. Albans, England, assignors to S. Smith & Sons (England) Limited, London, England, a British company
Filed Apr. 13, 1965, Ser. No. 447,703
Claims priority, application Great Britain, Apr. 13, 1964, 15,232/64
12 Claims. (Cl. 324—70)

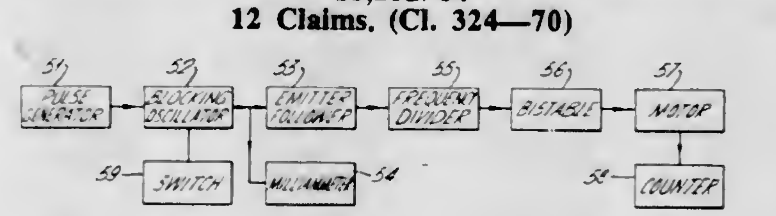

The disclosure relates to a combined vehicle odometer and speedometer having a pulse generator which produces pulses at a frequency proportional to the vehicle speed.

The pulses are shaped and are then passed through a frequency divider and a drive circuit to a counter driven by a stepping motor and calibrated in units of distance. The shaped pulses are also passed to a current meter calibrated in units of speed.

3,396,334
GEOPHYSICAL GRADIOMETER INCLUDING MEANS FOR DETERMINING SPACING BETWEEN AIRBORNE BODIES

Daniel P. Hearn, Tulsa, Okla., assignor, by mesne assignments, to Sinclair Research, Inc., New York, N.Y., a corporation of Delaware
Filed Mar. 9, 1966, Ser. No. 532,914
4 Claims. (Cl. 324—43)

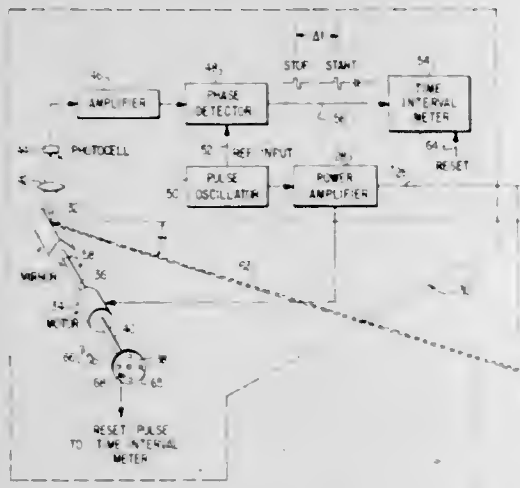

1. In a system for measuring a magnetic gradient in the earth's magnetic field comprising an airplane, two aerodynamic bodies towed by said airplane at different heights with respect to the earth's surface, and at known distances behind said airplane, each of said aerodynamic bodies containing a device for measuring the earth's magnetic field, recording means in said airplane and means electrically interconnecting said devices and the recording equipment in said airplane, the improvement of means for measuring the spacing between said aerodynamic bodies comprising a light source in each of said aerodynamic bodies, means for pulsing said light sources to direct a light beam from each of said bodies toward said airplane including a power amplifier, and means for detecting said light beams and measuring the angle therebetween comprising a rotatable mirror, means for rotating said mirror at a known speed, said mirror being arranged to sequentially reflect said light beams from the individual sources, pulse means for creating separate electrical pulses corresponding to said reflected light beams and means for measuring the time between said separate pulses as a measure of the angle between said light beams whereby the spacing between said two aerodynamic bodies is determined from said angle and the known distances to said bodies so that spacing variations may be determined to provide magnetic gradient measurements accurately representing the earth's magnetic field.

3,396,335
METHOD OF TESTING PRINTED CIRCUIT CONDUCTORS

Robert P. Burr, Lloyd Harbor, and Robert L. Swiggett, Lloyd Harbor, Huntington, N.Y., assignors to Circuit Research Company, Glen Cove, N.Y., a New York partnership
Continuation of application Ser. No. 354,269, Mar. 24, 1964. This application Aug. 26, 1966, Ser. No. 575,473
5 Claims. (Cl. 324—51)

1. The method of testing printed circuit conductors to indicate limitations on the current-carrying capacity thereof comprising:

maintaining a self-supporting, heat-sensitive sheet, which changes color in local areas in response to local temperature rises, in intimate contact with a printed circuit conductor;

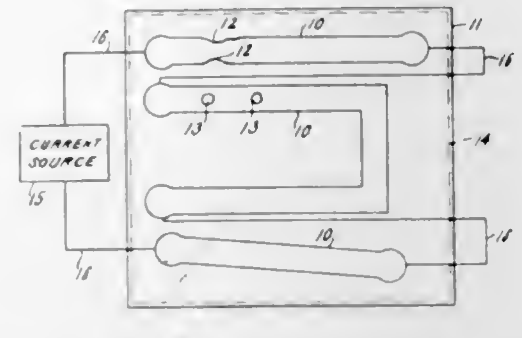

and supplying through said conductor current flow of a magnitude less than that which causes a temperature rise effecting a color change in said sheet in areas of said conductor having the desired current-carrying capacity but of a magnitude sufficient to cause a temperature rise effecting a local color change in said sheet in areas of higher impedance of said conductor, thereby indicating a limitation on the current-carrying capacity of the conductor.

3,396,336
PEAK READER APPARATUS EMPLOYING A SERVO REBALANCE MOTOR OPERATING IN A SINGLE DIRECTION

Wendell P. Cropper, Lansing, Ill., assignor to Standard Oil Company, Chicago, Ill., a corporation of Indiana
Filed Aug. 12, 1964, Ser. No. 389,019
6 Claims. (Cl. 324—103)

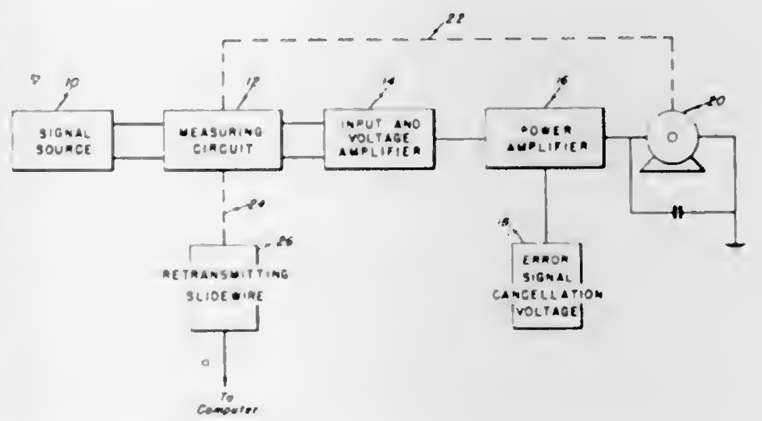

A peak reader and memory apparatus including a signal source, a measuring circuit, and input and voltage amplifier, a power amplifier, and an error signal cancellation voltage connected in series, and a servomotor connected to the power amplifier. A linkage from the servomotor is connected to the measuring circuit. The measuring circuit is also connected to a retransmitting slide wire.

3,396,337
DEFLECTED WIRE ELECTROMETER HAVING AN AUXILIARY ELECTRODE FOR IMPROVED SENSITIVITY

Rolf Hosemann, Schorlemmerstrasse 6a, Berlin-Dahlem, Germany, and Günter Basler, Sven-Hedin-Strasse 18, Berlin-Zehlendorf, Germany
Filed Dec. 1, 1964, Ser. No. 414,950
26 Claims. (Cl. 324—109)

An auxiliary electrode arrangement for increasing the low range sensitivity of an electrometer having an inner electrode, an outer electrode and a deflectable element

connected to the inner electrode and arranged for movement with respect thereto, the auxiliary electrode arrangement including a pair of auxiliary electrodes electrically

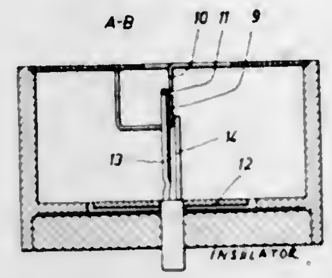

connected to the outer electrode and disposed on opposite sides of the path of movement of the deflectable element and close to the position occupied by the deflectable element when it is in its nondeflected position.

3,396,338
INSTRUMENT-TYPE TRANSFORMERS FOR UNIDIRECTIONAL CURRENT CIRCUITS

James L. Buchanan, McKean, and William B. Zelina, Erie, Pa., assignors to General Systems Inc., a corporation of Pennsylvania
Continuation-in-part of application Ser. No. 298,106, July 29, 1963. This application Oct. 2, 1967, Ser. No. 672,128
30 Claims. (Cl. 324—117)

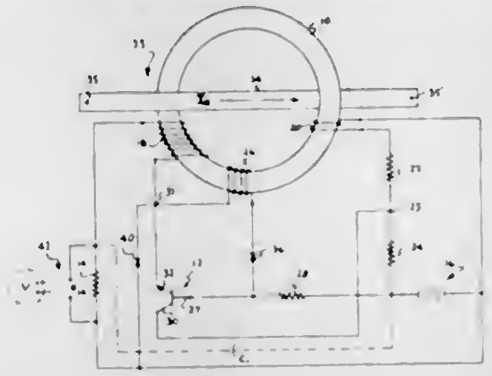

A transformer for use with unidirectional current circuits wherein a magnetic core is arranged for magnetization in one direction during one portion of a cycle of operation from a direct current source and during the other portion of the cycle is arranged for magnetization in the opposite direction from current in an external unidirectional current circuit which is magnetically coupled to the core so that an output means associated with the magnetic core is energized to produce an output which is proportional to the current in the unidirectional current circuit.

3,396,339
CAPACITIVE VOLTAGE SENSING DEVICE INCLUDING COAXIALLY DISPOSED CONDUCTIVE TUBES AND ELECTRICAL DISCHARGE INHIBITION MEANS

George V. Miram, Daly City, Calif., assignor, by mesne assignments, to Varian Associates, a corporation of California
Filed Nov. 29, 1963, Ser. No. 327,016
10 Claims. (Cl. 324—126)

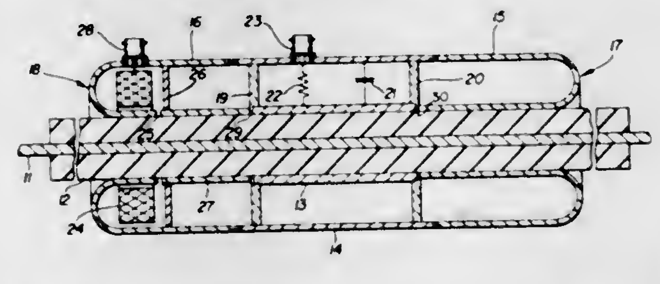

A capacitive voltage sensing device having two radially-separated and capacitively-linked, coaxially disposed, conductive tubes. Output means are electrically coupled to the capacitance. Arcuate end members inhibit electrical discharge between the voltage conductor and the ends of the tube adjacent thereto.

3,396,340
CONSTANT DEVIATION RATIO FM TRANSMITTER

Stanley H. Black and Robert S. Jacobson, Phoenix, Ariz., assignors to Sperry Rand Corporation, Great Neck, N.Y., a corporation of Delaware
Filed Apr. 9, 1965, Ser. No. 446,894
10 Claims. (Cl. 325—138)

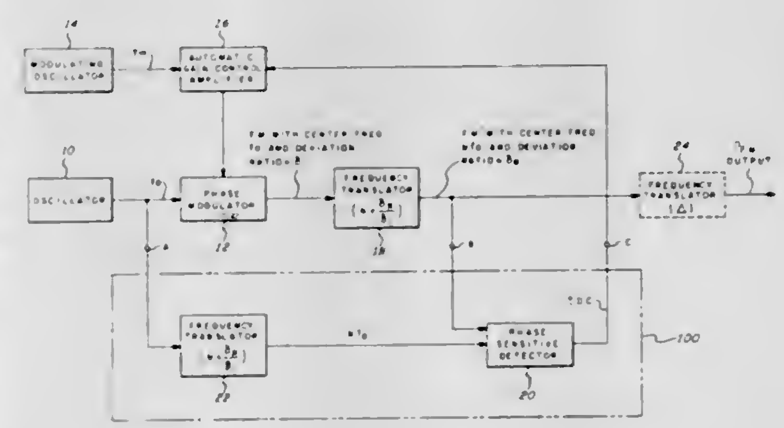

A carrier oscillator output voltage is frequency modulated by a modulating signal applied to a modulator through an AGC amplifier. The modulated signal and a signal from the carrier oscillator are individually frequency translated by a predetermined factor sufficient to reduce the carrier component to zero under normal conditions. The two translated waves are applied to a phase sensitive detector in which the translated carrier oscillator signal is used as a reference. Any output of the detector represents an error signal and is used to adjust the gain of the amplifier to a level that will minimize the carrier component.

3,396,341
I.F. FILTER FOR TELEVISION TUNER

Eugene K. Von Fange, Syracuse, N.Y., assignor to General Electric Company, a corporation of New York
Filed May 3, 1965, Ser. No. 452,498
5 Claims. (Cl. 325—477)

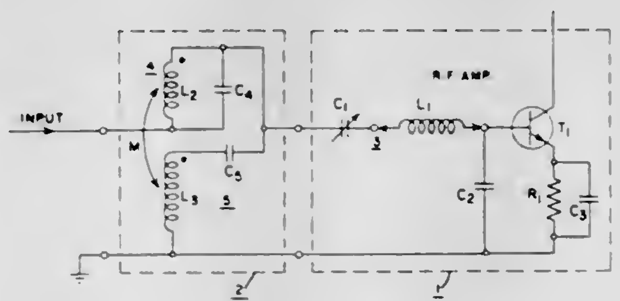

An I.F. filter comprising substantially mutually coupled parallel and series LC resonant circuits is coupled to an input tuned circuit of an RF transistor amplifier. The series resonant circuit is connected between ground and the junction between the parallel resonant circuit and the input tuned circuit. The parallel resonant circuit is tuned to a frequency of 41 mc. while the series resonant circuit is tuned to a frequency of 46 mc. to provide I.F. rejection in the 41–46 mc. band.

3,396,342
POWER SUPPLY CIRCUIT FOR CONTINUOUS WAVE MAGNETRON OPERATED BY PULSED DIRECT CURRENT
Albert E. Feinberg, Chicago, Ill., assignor to Advance Transformer Co., Chicago, Ill., a corporation of Illinois
Continuation-in-part of application Ser. No. 450,441, Apr. 23, 1965. This application Aug. 16, 1965, Ser. No. 479,973
24 Claims. (Cl. 328—262)

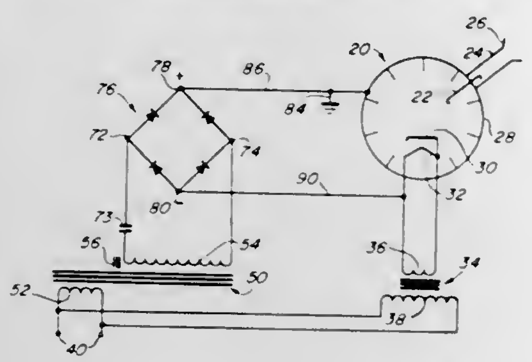

An operating circuit for energizing a magnetron from an A.C. line of relative low voltage and low frequency. The operating circuit has a substantially constant current transformer, a condenser series coupled to the secondary winding of said transformer and return path means through the condenser. The primary and secondary windings of the transformer are electrically isolated from one another and are coupled in a high leakage reactance operating relationship to one another. A magnetic shunt is interposed between the windings of the transformer to provide the desired leakage reactance during operation. The condenser is of such size to cause leading current to flow through the secondary winding to result in saturation of the transformer core. In the preferred embodiment, the return path means consists of a full wave rectifier, which has a pair of input terminals connected to the combination of the secondary winding and the series connected condenser. In this embodiment both half cycles of the alternating current wave are transmitted to the anode of the magnetron. The return path means can also comprise a diode or another magnetron.

3,396,343
OPTICAL MASER WITH AN ADJUSTING MECHANISM FOR A MIRROR
Gustaaf Adolf Wesselink, Emmasingel, Eindhoven, Netherlands, assignor to North American Philips Company, Inc., New York, N.Y., a corporation of Delaware
Filed Sept. 25, 1963, Ser. No. 311,453
Claims priority, application Netherlands, Oct. 11, 1962, 284,259
6 Claims. (Cl. 331—94.5)

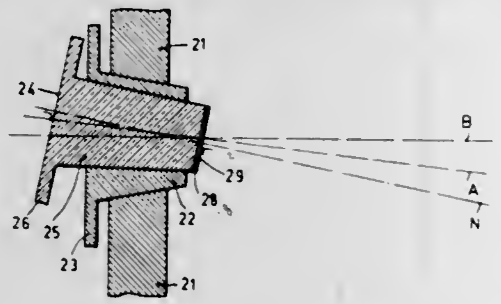

An optical maser having at least one mount having a tapered portion mounted in a tapered bore whereby the mount is rotatable about a first axis and is at an acute angle with the axis N. The support is also provided with a tapered portion fitted within a tapered opening. The support is rotatable about a second axis which makes an acute angle with the first axis.

3,396,344
SEMICONDUCTOR LASER ARRAY
Ronald Francis Johnston Broom, Westmill, Buntingford, England, assignor to National Research Development Corporation, London, England, a British corporation
Filed Feb. 18, 1965, Ser. No. 433,751
Claims priority, application Great Britain, Feb. 24, 1964, 7,521/64
10 Claims. (Cl. 331—94.5)

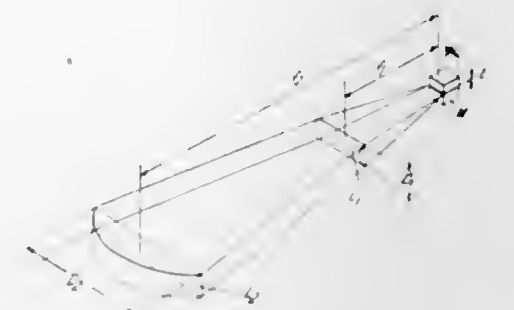

1. A semiconductor laser structure comprising a solid state laser formed by a block of semiconductor material containing a P–N junction layer having two opposite end faces optically polished flat and parallel to one another as resonator reflector, one of said end faces being a radiation emitting surface when the laser is excited, in combination with

(a) a short focus plano-cylindrical collimating lens of aperture $f/2$ with its plane face towards and parallel to the laser emitting surface, the axis of curvature of said lens being spaced from the laser emitting surface at the focal distance of the lens and located in the tangential plane parallel to the junction layer, and

(b) a second plano-cylindrical lens of longer focus than the first-mentioned lens and of aperture $f/6$ with its plane face towards and parallel to the laser emitting surface to receive the radiation focussed by the first lens, the axis of curvature of said second lens being spaced from the laser emitting surface by at least the focal distance of the lens and located in the sagittal plane perpendicular to the plane of the P–N junction layer.

3,396,345
STABLE TRANSISTOR AUDIO OSCILLATOR
Raymond W. Hoeppel, P.O. Box 5, Oak View, Calif. 93022
Filed Oct. 24, 1966, Ser. No. 588,987
7 Claims. (Cl. 331—117)

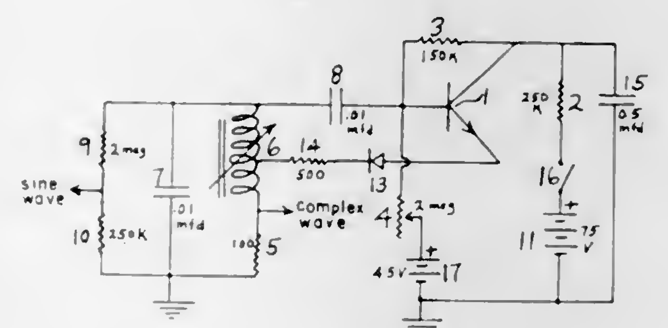

A stable transistorized Hartley oscillator is attained by the addition of a diode and a resistor in the emitter circuit of the transistor, thus enabling the production of an audio signal that remains constant in frequency as the supply voltage is reduced from the normal operating voltage to zero. Such type of operation is desirable in the production of sustained tones by the capacitor discharge method, such as in electronic organs.

3,396,346
PHASE SHIFT OSCILLATOR WITH ERROR CORRECTOR
Peter L. Richman, Lexington, Mass., assignor to Weston Instruments, Inc., Newark, N.J., a corporation of Delaware
Filed Feb. 1, 1967, Ser. No. 613,191
8 Claims. (Cl. 331—135)

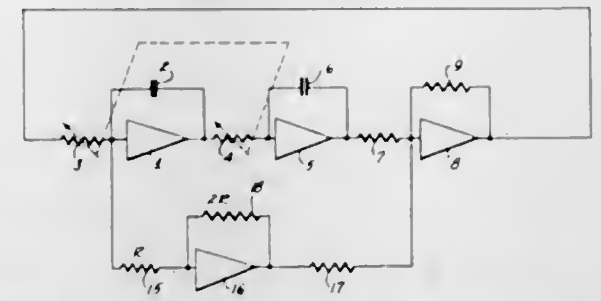

A closed loop dual integrator-inverter oscillator circuit is provided with a forward-feed circuit which includes an operational amplifier and which amplifies and shifts the phase of an error signal the proper amount to reduce the loop error to zero. In one embodiment the forward-feed circuit is connected between the summing junction of the first integrator circuit and the input of the inverter circuit. In another embodiment two forward feed circuits are provided, one connected in parallel circuit relationship with each integrator circuit.

3,396,347
PRECISION OSCILLATOR
Peter L. Richman, Lexington, Walter T. Towner, Canton, and John G. Nordahl, Lexington, Mass., assignors to Weston Instruments, Inc., Newark, N.J., a corporation of Delaware
Filed Jan. 18, 1967, Ser. No. 610,163
8 Claims. (Cl. 331—136)

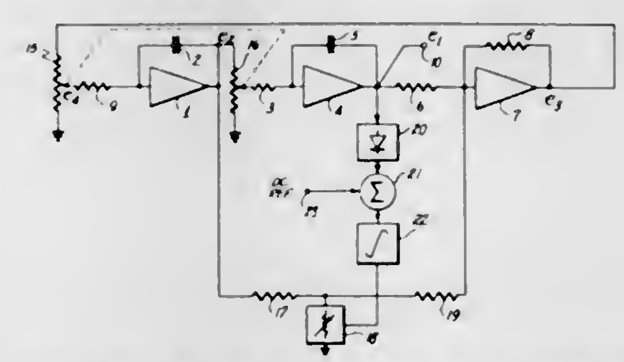

A phase shift oscillator, including two integrator circuits and an inverter circuit connected in a closed loop with variable resistors for frequency adjustment in the integrator input circuits, is provided with an error correcting feed-forward circuit between the output of the first integrator and the input of the inverter. The error correcting circuit attenuates the forward-fed signal by varying the impedance to ground of a modulator. The modulator includes a plurality of diodes which are biased by a DC voltage derived from the oscillation output by a rectifier-integrator network.

3,396,348
BROADBAND CONTROLLED MUTUAL INDUCTANCE SLOW WAVE PROPAGATING STRUCTURE
Chao Chen Wang, Mineola, N.Y., assignor to Sperry Rand Corporation, Great Neck, N.Y., a corporation of Delaware
Filed Jan. 6, 1964, Ser. No. 335,912
7 Claims. (Cl. 333—31)

A ladder line slow wave propagating structure having two interlaced sets of conductive loops connecting the individual ladder rungs together. One set is angularly disposed relative to the other set to reduce mutual coupling inductances thereby achieving broadband operation. The physical sizes and positions of the two sets of conductive

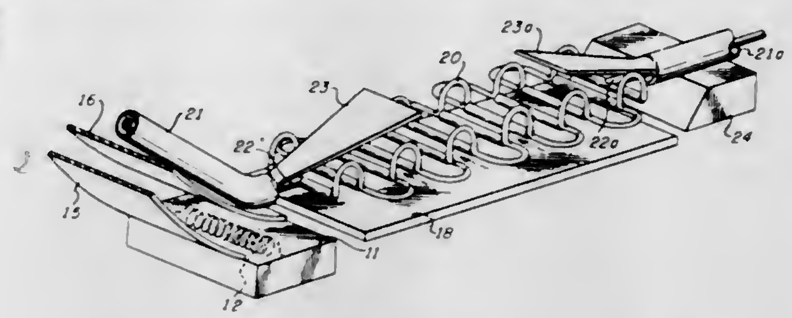

loops are adjusted so that the adjacent conductive loops have substantially equal inductive susceptances.

3,396,349
TECHNIQUE FOR VARYING THE BANDWIDTH OF A SPIN RESONANT DEVICE
Bernard Rider, Bethesda, Md., assignor to Litton Systems, Inc., Beverly Hills, Calif., a corporation of Maryland
Filed Nov. 7, 1966, Ser. No. 592,474
6 Claims. (Cl. 333—70)

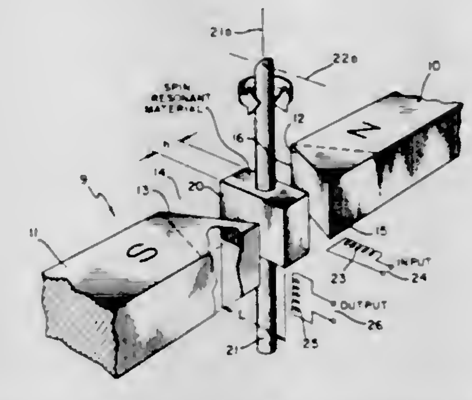

1. Apparatus for varying the bandwidth of a spin resonant device, comprising:
 means for producing a magnetic field throughout a region,
  the intensity of said magnetic field varying as a function of a preselected dimension of said region;
 spin resonant means disposed in said region so as to be subjected to said magnetic field;
 said spin resonant means presenting an effective dimension as graphically projected onto a plane contained in said region and perpendicular to said magnetic field; and
 means for selectively varying the length of said effective dimension;
 said effective dimension of said spin resonant mass being parallel to said preselected dimension of said region.

ERRATUM

For Class 333—72 see:
Patent No. 3,396,327

3,396,350
WAVEGUIDE
Wolfgang Krank and Gerhard Schickle, Backnang, Germany, assignors to Telefunken Patentverwertungs-G.m.b.H., Ulm (Danube), Germany
Filed July 28, 1965, Ser. No. 475,340
Claims priority, application Germany, Aug. 6, 1964, T 26,745; Nov. 23, 1964, T 27,467; Apr. 15, 1965, T 28,397
16 Claims. (Cl. 333—95)

A corrugated elliptical waveguide having a non-circular cross section and provided with at least one recess extend-

ing in the longitudinal direction of the corrugated guide and disposed symmetrically with respect to the minor

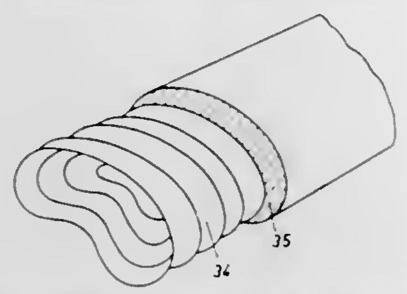

cross-sectional axis of the guide for capacitatively loading the guide without substantially decreasing its mechanical flexibility.

3,396,351
ELECTROMAGNETIC LATCHING RELAY
Earl R. Callender, Pittsburgh, Pa., assignor to Westinghouse Air Brake Company, Swissvale, Pa., a corporation of Pennsylvania
Filed Sept. 7, 1966, Ser. No. 577,699
17 Claims. (Cl. 335—113)

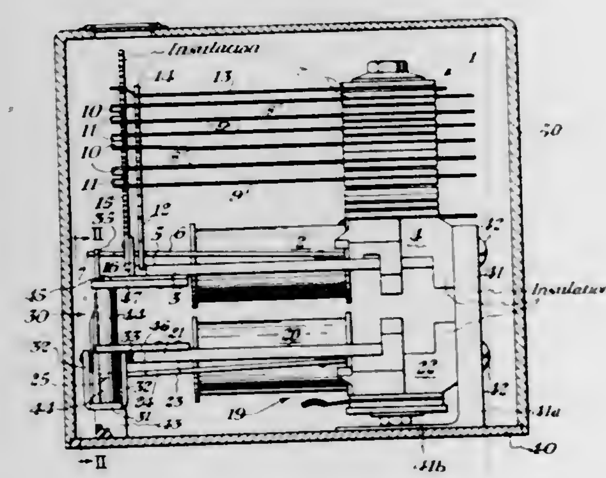

An electromagnetic relay including a pivotal bell-crank latch and an electromagnetic release. One arm of the bell-crank is used to lock the movable armature of the relay in a predetermined position and the other arm of the bell-crank cooperates with the movable member of the electromagnetic release to permit unlocking of the movable armature.

3,396,352
SAFETY SWITCH FOR VEHICLES
Reginald D. Wilson, Baltimore, Md., assignor to The Wilson Switch Company, Baltimore, Md., a corporation of Maryland
Filed Oct. 6, 1966, Ser. No. 584,811
9 Claims. (Cl. 335—170)

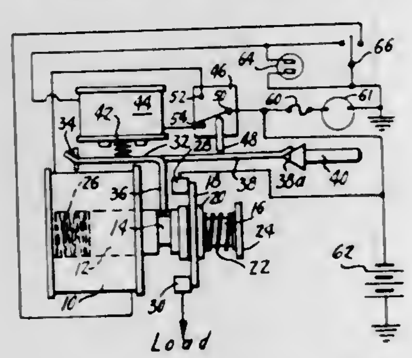

An emergency electric relay switch for controlling the circuitry of an automotive vehicle and including a pair of normally de-energized solenoids each having an armature, releasable means connecting said armatures against movement, and switch means on one of the armatures normally closing one of said circuits; a single pole single throw switch connected in the circuit of each solenoid and operable to alternately energize and de-energize said solenoids to effect the release and connection of the armatures and the attendant opening and closing, respectively, of each said switch means; and, an overriding manually operable switch reset means connected to said single pole double throw switch to actuate and reset said last-named switch.

3,396,353
ELECTRIC OVERLOAD RELAY
Henri H. Jamon, Soisy-sous-Montmorency, France, assignor to Satra Societe Achat et Transactions, Vaduz, Liechtenstein
Filed Nov. 15, 1965, Ser. No. 507,951
Claims priority, application Switzerland, Nov. 14, 1964, 14,713/64
14 Claims. (Cl. 335—229)

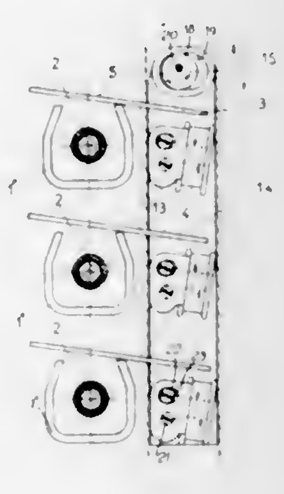

An electric overload relay including elongated armature means of magnetizable material, electromagnet means including a member of magnetizable material arranged adjacent one end portion of the elongated armature means spaced by an airgap therefrom and current carrying conductor means or magnetizing the member to create a first magnetic field depending on the current flowing through the conductor means and tending to move the armature means in one direction, and permanent magnet means arranged adjacent an opposite end portion of the armature means also spaced by an airgap therefrom and producing a second magnetic field tending to move the armature means in a direction opposite to the first direction, the second magnetic field having a magnitude so that the armature means will move in the first direction only when an overload current of predetermined magnitude flows through the conductor means.

3,396,354
SOLENOID WITH PLUNGER
Hardin Y. Fisher, Hillside, Ill., assignor to Deltrol Corp., Bellwood, Ill., a corporation of Delaware
Filed Sept. 1, 1966, Ser. No. 576,620
12 Claims. (Cl. 335—248)

1. A solenoid of the type comprising a coil mounted on a bobbin having a tubular portion coaxial with the coil and flanges at its opposite ends between which the coil is confined, a plunger guided in the tubular portion of the bobbin for endwise reciprocatory motion between an extended position and a defined attracted position, and a magnetically permeable frame having spaced substantially parallel legs between which the bobbin is axially received, one of said legs having an opening through which an outer portion of the plunger projects, said solenoid being further characterized by the following:

(A) resilient means acting upon one end of the bobbin to yieldingly hold the same in a predetermined axial position defined by the engagement of the opposite end of the bobbin with the adjacent leg of the frame;

(B) means holding the bobbin with its tubular portion substantially centered with respect to said plunger opening, and preventing all but axial motion of the bobbin in a direction away from said adjacent leg of the frame, said means comprising interengaging surfaces on said opposite end of the bobbin and on said adjacent leg of the frame maintained in cooperative relationship by said resilient means, said surfaces being disengageable in consequence of axial movement of the bobbin in said direction to release it for rotary motion about its axis, and said surfaces being adapted to interengage and nonrotatably hold the bobbin in any one of a plurality of different positions of angular adjustment on its axis;

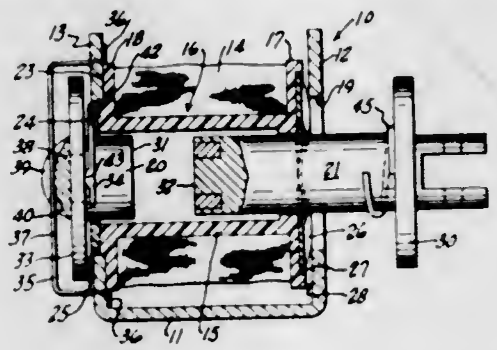

(C) and terminals fixed on and projecting from the exterior of the coil, said terminals being positionable in any one of a plurality of different attitudes relative to the frame corresponding to the angular disposition of the bobbin on the frame.

3,396,355
COOLED HYDROGEN OR NEON USED AS TRANSFORMER DIELECTRIC
Bernard Hochart, Rueil-Malmaison, and Pierre Burnier, Versailles, France, assignors to Societe Generale de Constructions Electriques et Mecaniques (Alsthom), Paris, France, a corporation of France
Filed June 29, 1964, Ser. No. 378,529
Claims priority, application France, June 28, 1963, 2,427, Patent 1,368,938
9 Claims. (Cl. 336—58)

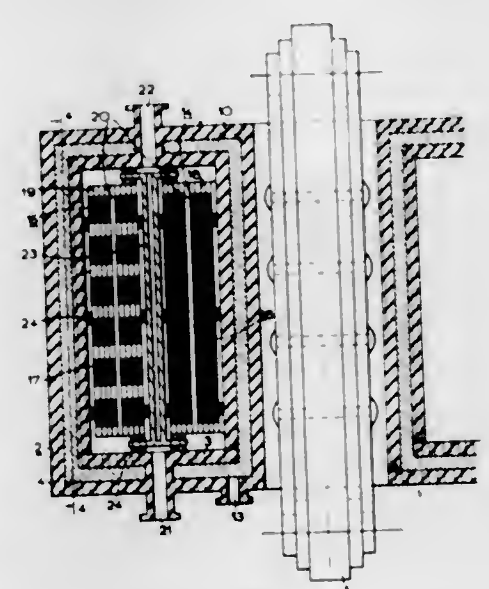

An electrical inductive apparatus such as a transformer has conductors of very pure metal kept at low temperature, surrounded by a dielectric which is fluid hydrogen or neon at 15° K. to 60° K. The metal may be Cu, Al, Fe, Au, or In containing less than 500 p.p.m. impurities.

3,396,356
CROSS-WOUND OPEN MESH COIL
Richard E. Whipple, Rochester, N.H., assignor to General Electric Company, a corporation of New York
Filed Nov. 1, 1965, Ser. No. 505,824
3 Claims. (Cl. 336—189)

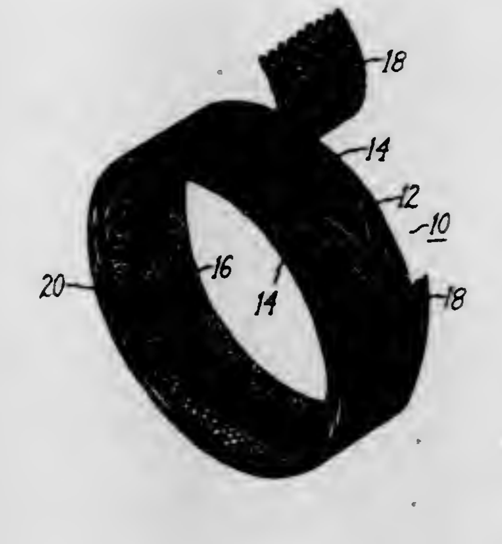

A novel cross-wound, open mesh coil and method of winding such coil. The open mesh coil is cross-wound on a flanged arbor using a thin-wall, hollow needle which presses the wire against the flange with a slight overthrow to help position the wire before the next traverse of the wire across the arbor. The cross-over points within the coil are bonded together by an adhesive overcoat on the wire, which is cured. An open mesh resin material is applied to the inner and outer surfaces of the coil and bonded thereto by curing. A specific machine for winding the coil is also disclosed.

3,396,357
TEMPERATURE SENSING CABLE AND METHOD FOR MAKING SAME
Tore E. Borg and Francis E. Elliott, Syracuse, N.Y., and Stephen Zysk, Stratford, Conn., assignors to General Electric Company, a corporation of New York
Filed Apr. 10, 1964, Ser. No. 358,899
14 Claims. (Cl. 338—26)

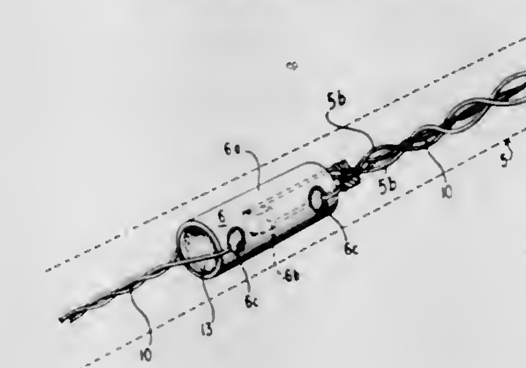

4. A cable for measuring temperature gradients in water, comprising:

(a) a plurality of insulated conductors;

(b) a plurality of temperature sensing elements, each of said elements being electrically connected to its associated conductor and located at spaced intervals along said cable, and

(c) means for relieving strain in the connection between each associated conductor and element, said strain relieving means including an encasing means for said element and at least one cord member extending from said encasing means and longitudinally with said associated conductor.

3,396,358
CONNECTING MATRIX STRUCTURE
Bruce Ballard, Costa Mesa, and Ron Pizer, Palos Verdes Estates, Calif., assignors to Elpac, Inc., a company of California
Filed Oct. 31, 1966, Ser. No. 590,590
9 Claims. (Cl. 339—18)

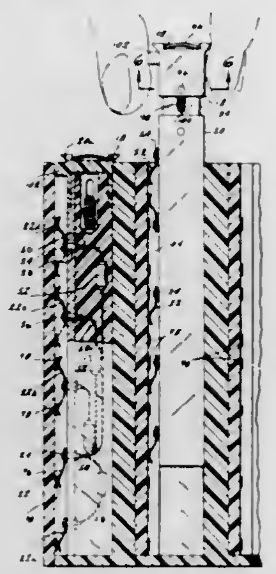

This invention relates to a terminal matrix for selectively interconnecting various electrical circuit paths. It consists of a receptacle having a plurality of contact points and a pin member for insertion into the receptacle. The pin member contains a diode circuit connected to a plurality of spring arm contacts which may each be pivoted to selectively engage the various contact points in the receptacle.

3,396,359
ELECTRICAL LEAD THROUGH CONNECTOR WITH BINDING POST AND JACK
William A. Melanson, Lexington, Mass., assignor to Cambridge Thermionic Corporation, Cambridge, Mass., a corporation of Massachusetts
Filed July 5, 1966, Ser. No. 562,625
2 Claims. (Cl. 339—32)

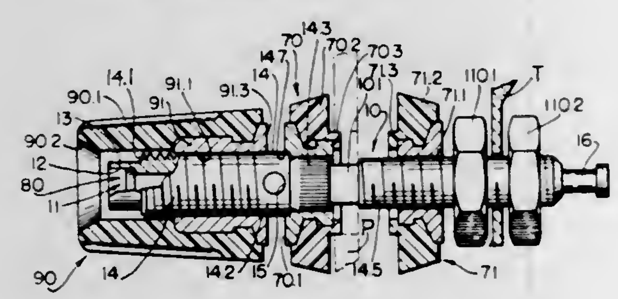

A lead through connector has a stud with a jack and an open cap at one end which is threaded for the cap. The other end is threaded for fastening contact making nut means. Intermediate the two threads are two insulating washers, one fastened to the stud and the other loose for engagement of a panel by tightening the nut. The stud has a hole adjacent the first washer for a wire, and the cap has a metal insert for engaging the wire.

3,396,360
COUPLING FOR CABLES OR THE LIKE
Robert Edward Piaget, 4432 Homer Ave., Cincinnati, Ohio 45227
Filed Aug. 26, 1966, Ser. No. 575,310
8 Claims. (Cl. 339—94)

A cable coupling having insulating sleeves respectively about a male connector and a female connector which include interlocking means for themselves when joined together, an extension on the sleeve mounted about the female connector and in which an internal annular protuberance is forced for engaging the male connector as the connectors are joined, thereby providing for a positive fluid tight seal. A shoulder is provided on the male connector, and onto which such protuberance rides. The sleeves may include tapering peripheral configurations for readily mating same together.

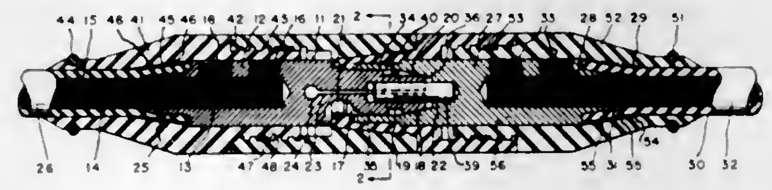

3,396,361
COMBINED MOUNTING SUPPORT, HEAT SINK, AND ELECTRICAL TERMINAL CONNECTION ASSEMBLY
Sanford Sussman, Hicksville, N.Y., assignor to Solitron Devices, Inc., Tappan, N.Y., a corporation of New York
Filed Dec. 5, 1966, Ser. No. 599,287
10 Claims. (Cl. 339—112)

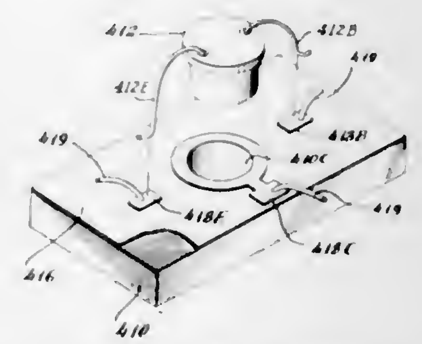

The invention provides a combined mounting support, heat sink and electrical terminal connection assembly for mounting a power semiconductor device which, during operation, generates substantial heat and where the heat must be removed for proper operation of the device. An example of a device of this type is a power transistor.

3,396,362
TERMINAL CLAMP
John K. Shannon, Kenosha, Wis., assignor to Quick Cable Corporation, Racine, Wis., a corporation of Wisconsin
Continuation-in-part of application Ser. No. 566,875, July 21, 1966. This application Oct. 3, 1966, Ser. No. 583,619
5 Claims. (Cl. 339—227)

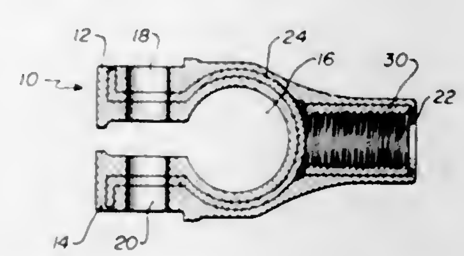

A lead battery terminal clamp which has a reinforcement ring and internally threaded tube which is preferably of steel, brass or another material having similar electrical and mechanical strength imbedded in it. One end of the threaded tube is open to threadedly receive a compression nut for connecting a battery cable to the clamp. The threaded tube being fabricated of steel or brass has sufficient strength to withstand the force exerted when the compression nut is screwed into it. It also improves the electrical conductivity from the battery post to the battery cable. The threaded tube also is preferably fixedly secured to the reinforcement ring to prevent the tube from being rotated when the compression nut is screwed into it.

The lead is preferably cast about the threaded tube and the reinforcement ring and, during casting, the lead is extended or overlapped over the edge of the periphery of the opening of the threaded tube so that the lead is mechanically secured to the tube. The lead which extends over the edge of the periphery of the opening of the tube also serves as a seal against corrosive acid when the compression nut is screwed tight against it.

3,396,363
HOLDING MEANS FOR MINIATURE BULBS
Saburo Suzuki, Tokyo, Japan, assignor of one-half to Nihon Yushutsu Denkyu Kyodo Kumai and one-half to Super Denki Kabushiki Kaisha, both of Tokyo, Japan, corporate bodies of Japan
Filed Nov. 21, 1967, Ser. No. 684,721
Claims priority, application Japan, Jan. 16, 1967, 42/3,778; Jan. 30, 1967, 42/7,417, 42/7,418
8 Claims. (Cl. 339—145)

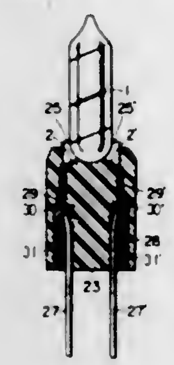

A bulb holder of synthetic resin is adapted to hold a small sealed glass bulb having two wires which protrude through its bottom wall. The holder comprises, in combination, a bulb holding member and a sleeve tightly fitted around it. The pair of conductive wires protruding from the bottom of the miniature bulb are bifurcated and tightly fitted into vertical slits in the holding member. The end portions of the conductive wires are tightly interposed between the holding member and the sleeve. The bottom of the bulb fits into a concavity in the top portion of the holding member. The bulb will be thus retained upright. The conductive wires are in electrical contact with external wires within said slits, or between the holding member and the sleeve, or both wires are electrically connected by means of metal plates interposed between the holding member and the sleeve.

3,396,364
ELECTRICAL SOCKET MEMBER HAVING INTERMEDIATE RESILIENT STRIPS AND PROCESS FOR MAKING SAME
François Robert Bonhomme, Courbevoie, Hauts-de-Seine, France, assignor to Connectronics Corporation, New York, N.Y., a corporation of New York
Filed Nov. 14, 1966, Ser. No. 593,766
Claims priority, application France, Nov. 15, 1965, 54,895; Nov. 8, 1966, 38,406
14 Claims. (Cl. 339—217)

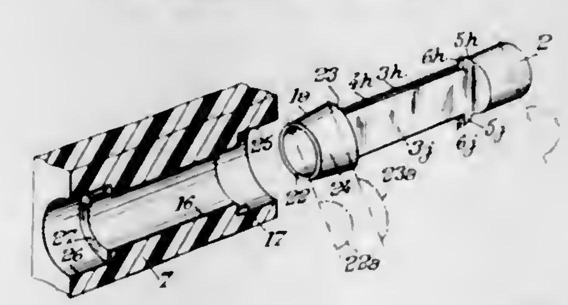

The process comprises the steps of deforming a middle portion of a cylindrical metal tube in a manner symmetrical with respect to the axis of the tube to form plug-engaging strips joined by edges projecting beyond the periphery of the undeformed tube end portions, and cutting out the said edges to form slots which separate the strips, the strips lying wholly within the periphery of the undeformed tube portions.

3,396,365
METHOD OF PROCESSING GEOPHYSICAL DATA WITH STABLE INVERSE FILTERS
Clyde W. Kerns, Irving, Tex., assignor to Mobil Oil Corporation, a corporation of New York
Filed May 3, 1966, Ser. No. 547,344
9 Claims. (Cl. 340—15.5)

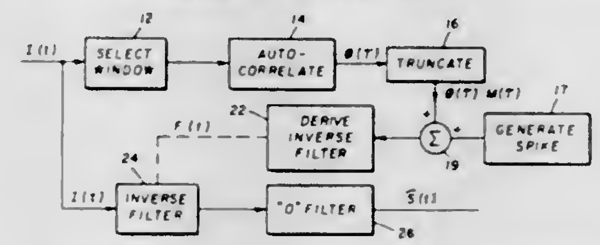

The specification discloses a method of processing seismic data to suppress coherent noise such as multiples, reverberations, and ghosts. An autocorrelation function is produced from an input seismic signal to characterize the noise. A white noise spike is added to the center point of the autocorrelation function to assure the stability of an inverse filter which is generated from the autocorrelation function. The input seismic signal is then convolved with the inverse filter.

3,396,366
ULTRASONIC WAVE DIRECTIVE ASSEMBLY
Bernard J. Midlock, Norwalk, Conn., and Richard W. Carlisle, Greenburgh, N.Y., assignors to Laboratory for Electronics, Inc., Waltham, Mass., a corporation of Delaware
Filed May 18, 1965, Ser. No. 456,630
16 Claims. (Cl. 340—38)

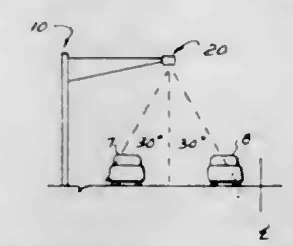

An improved sonic or acoustic wave directive assembly, an electroacoustic or sonic transducer head assembly and/or sonic detector of vehicles incorporating an improved sonic wave directive assembly. An improved preferred form of wave directive assembly includes a pair of spaced lens segments or wave directive sets of several elongated slanted vanes, the two sets being mounted symmetrically with respect to the wave transmission axis. The vanes of each set are slanted outward from the front of the assembly toward such transmission axis, and are spaced in parallel planes within the set, the outermost vane serving to mount the set and the successive vanes having progressively varying width and lateral displacement within the set so that the outer and inner edges of the vanes lie along respective substantially cylindrical surfaces having axes perpendicular to the transmission axis, such axes being behind the assembly for the inner edges and ahead of the assembly for the outer edges, to provide a substantially cylindrical biconcave, lens-like assembly, adapted to be mounted with a transducer over or adjacent a road with such cylindrical axes along the road to provide a wide beam pattern (with minimal side lobes) transverse to the road (e.g., for two lanes) and a narrow beam pattern along the road.

3,396,367
TURNPIKE TURN SIGNAL TIMING AND CANCELLING ASSEMBLY
Perry O. Lohse, 529 Richmond Road, Cleveland, Ohio 44124
Filed Sept. 3, 1965, Ser. No. 484,835
16 Claims. (Cl. 340—55)

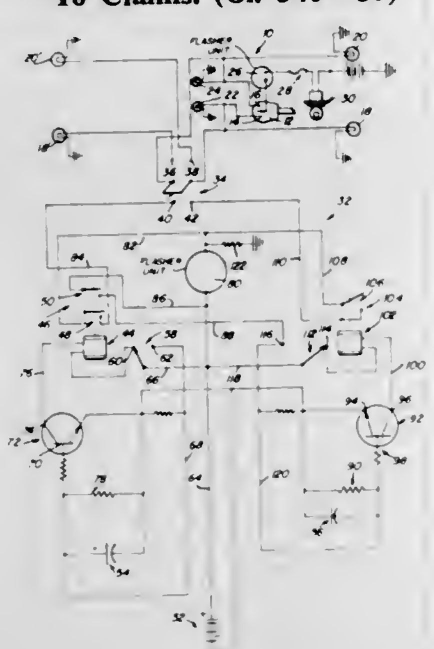

A manually actuatable switch causes a first transistor to conduct through a relay coil connected in the series with the transistor collector. The relay contacts are closed thereby permitting current flow from a flasher unit to a signal lamp. An RC timing circuit causes the transistor to conduct for a preselected time interval. Energization of the relay coil causes the charging of a capacitor which in turn forward biases a second transistor at the termination of the first time interval. Conduction by the second transistor causes a current flow through a relay coil thereby closing a set of associated switch contacts. The closing of the switch permits current to flow from the flasher unit to a second signal lamp for a second predetermined time interval governed by the discharge rate of the aforementioned capacitor.

3,396,368
ELECTRICAL SIGNALLING ARRANGEMENT FOR CONTROL OF TAPE TRANSMISSION SYSTEM
Azizuddin Hashim Ismail Lakhani, Taplow, England, assignor to British Telecommunications Research Limited, Taplow, England, a British company
Filed Aug. 4, 1964, Ser. No. 387,328
Claims priority, application Great Britain, Aug. 9, 1963, 31,601/63
11 Claims. (Cl. 340—146.1)

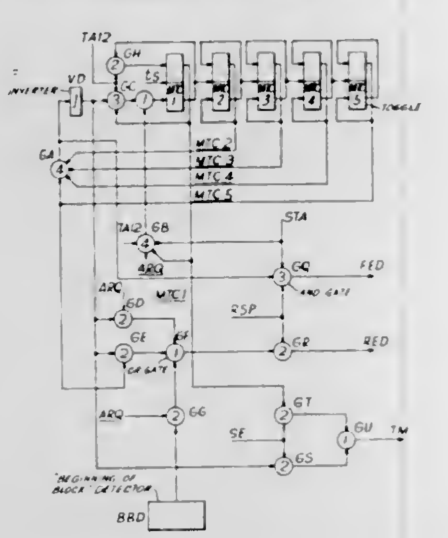

Error detection apparatus for a data transmission system including error detection equipment at the receiving end arranged to transmit a supervisory signal which is interrupted if an error is detected and circuit arrangement for setting a timing device at the transmitting end into operation on detection of an interruption of said signal. If the supervisory signal is again received at the end of the period of the timing device, error correction arrangements become effective at both the transmitting and receiving ends. On the other hand if the absence of the supervisory signal persists after the end of said period, indicating a fault such as a line break, transmission is arrested.

3,396,369
QUATERNARY DECISION LOGIC SYSTEM
Abraham Brothman, Dumont, and Michael Gomery, Saddle River, N.J., and Allen H. Miller, Laurelton, N.Y., and Lee Horowitz, Cedar Grove, N.J., assignors, by mesne assignments, to Sangamo Electric Company, Springfield, Ill., a corporation of Delaware
Filed Jan. 18, 1965, Ser. No. 426,067
28 Claims. (Cl. 340—146.1)

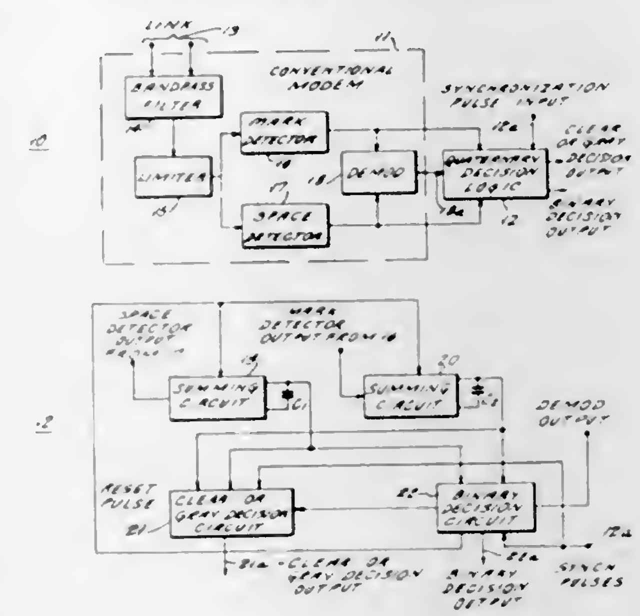

A decision logic circuit for use in improving error detection and correction capabilities of a communication system by examining incoming data bits, dividing each bit into a plurality of Nyquist intervals, examining the state of each Nyquist interval and developing analog signals representative of the total Nyquist states of each incoming bit, which state is utilized by logic means to provide first and second outputs representing the binary state and the quality of the examined bit.

3,396,370
CODED TONE SUPERVISORY SYSTEM
Norman F. Agnew, Irwin, Pa., assignor to Femco, Inc., Irwin, Pa., a corporation of Pennsylvania
Filed Sept. 11, 1964, Ser. No. 395,689
7 Claims. (Cl. 340—163)

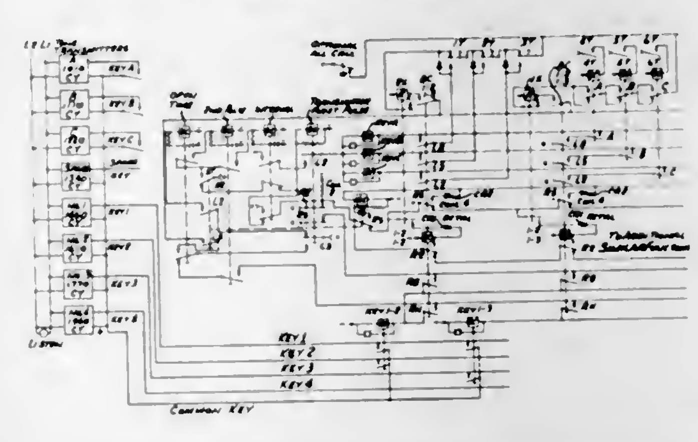

A coded tone supervisory system transmitted over a two wire control line between stations connected thereto, each station having tone transmitters and corresponding tone receivers the former actuating a specific combination of tone repeating relays energized by the signal including a first tone frequency pulse an interval period followed by a second tone frequency pulse followed by an open time period which completes the code for the selected function transmitted. The code signal includes a group selection and a function selection in combination with the first and second pulses transmitted. The tone receivers at the receiving station responding to their respective frequencies transmitted and require at least two tone receivers to determine the group selection and the function selection from the signal to energize the selected receiver relay which in turn selects one of a series of group relays selected by a repeater relay in response to the first tone frequency, and a function relay in response to the second tone frequency which operate through the selected group relays to energize the specific selected group relay and the specific selected function relay for the purpose of closing contacts to complete the function selected for transmission. Through this system of the combination of plurality of tone transmitters and receivers operating their respective receiving relays may with two different tones provide ten selections to energize one of a specific group of ten relays for the first tone burst and another providing ten selections for energizing one of a specific function relay for the second tone burst. This in turn multiplies the possible combination of transmitting one hundred functions. If three different function tones are used the selection of a total of three hundred functions may be transmitted.

3,396,371
CONTROLLER FOR DATA PROCESSING SYSTEM
Donald E. Waldecker, Endicott, N.Y., assignor to International Business Machines Corporation, New York, N.Y., a corporation of New York
Filed Sept. 29, 1964, Ser. No. 400,015
15 Claims. (Cl. 340—172.5)

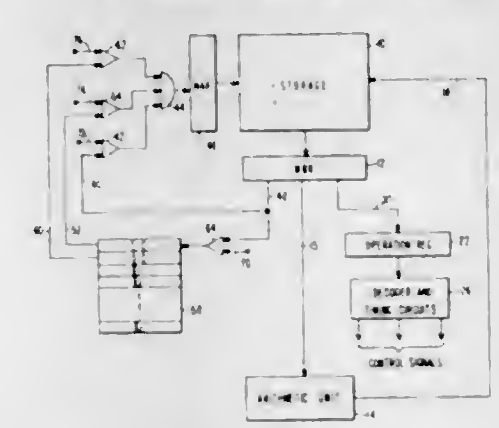

A controller for data processing system having a storage for storing operands and instructions with a data path to a push down memory which has a plurality of registers wherein the topmost two registers store the instruction address and the operand address, the content of each of the two topmost registers being selectively incremented and supplied to the storage device for addressing purposes, and wherein the push down memory serves to store subroutine entry and exit points of a program of instructions.

3,396,372
POLLING SYSTEM
James D. Calvert, Poughkeepsie, N.Y., assignor to International Business Machines Corporation, Armonk, N.Y., a corporation of New York
Filed Dec. 29, 1965, Ser. No. 517,361
13 Claims. (Cl. 340—172.5)

The disclosure is directed to a parallel polling system wherein a data receiving location concurrently polls all addresses assigned to all of a large number of data transmitting locations and, from the return replies of those requesting service, selects upon a priority basis the address of one to receive service. Polling selection is accomplished by successive address digit orders from a first order to a last order and priority selection for service is by preassigned geographic location identified within each address digit order. From return service request replies of the first order, first-ordered digit poll addressing of the transmitting locality of highest priority is continued and first-order digit poll addressing of all other transmitting localities is

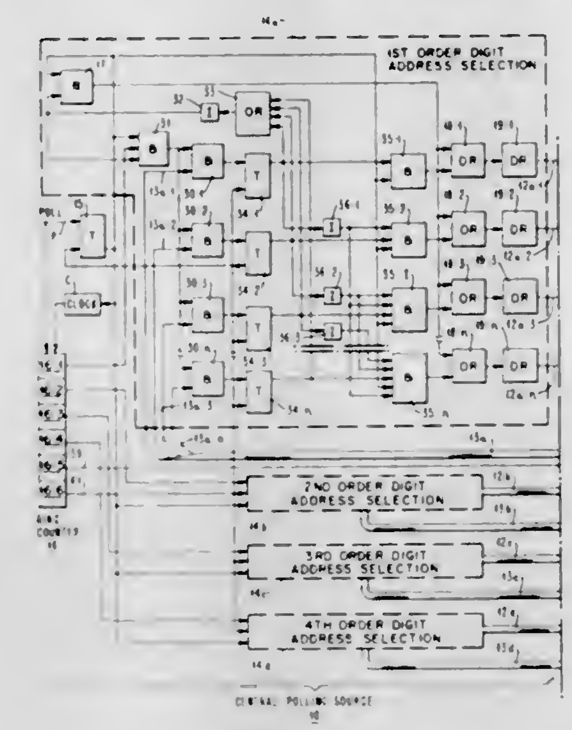

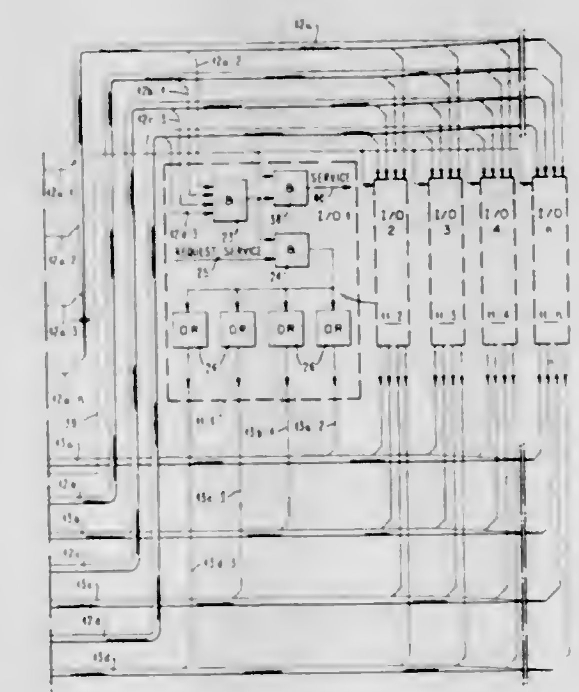

terminated. Poll digit address selection progresses in the same manner for the second and each successively higher digit order, each time priority selecting one locality for continued digit order polling and terminating polling in that digit order to all other localities. The highest-order priority selection ultimately continues order-selection polling of all address digits of only one transmitting locality, and it is this locality which receives service.

3,396,373
FERRITE RING CORE DATA TRANSMITTER
Radoslàv Didić, Sandweg 21, Bad Hersfeld, Germany
Filed Apr. 23, 1964, Ser. No. 362,060
Claims priority, application Germany, May 2, 1963, Z 10,095
3 Claims. (Cl. 340—174)

A memory matrix having a plurality of bistable magnetic cores possessing a substantially rectangular hysteresis characteristic. A readout line is coupled to all

cores in each matrix, each row having its individual line. Each matrix column is coupled to an individual exciter line. An information line is selectively coupled to some cores and bypasses other cores. A first and second current pulse are simultaneously impressed on the information line and on one selected exciter line respectively. The current pulses have substantially equal amplitude, equal

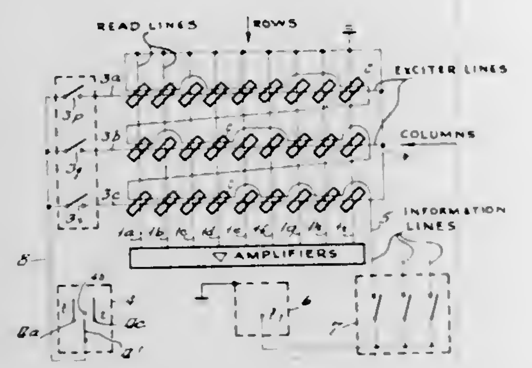

duration, but opposite polarity. The current pulse on the selected exciter line is sufficient for changing the stable state of the bypassed cores coupled thereto and inducing readout pulses through the appropriate readout lines. The selected exciter line subsequently applies to all its associated cores a third pulse of equal magnitude but opposite polarity to the second current pulse and returns the bypassed cores to their former magnetic condition.

3,396,374
FORCE BALANCE INSTRUMENT HAVING V-NOTCH MOUNTED SHAFT AND OVER-RANGE PROTECTION
Roy W. Barthel, Penfield, and Howard R. Jaquith, Rochester, N.Y., assignors to Taylor Instrument Companies, Rochester, N.Y., a corporation of New York
Filed Dec. 14, 1964, Ser. No. 418,352
13 Claims. (Cl. 340—187)

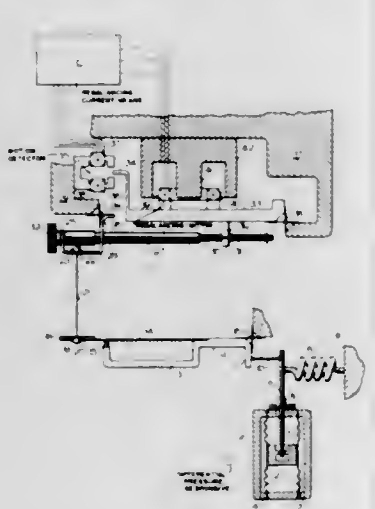

A rotatable shaft is mounted by a pair of V-notched members on opposite sides of the shaft, the members being received in V-grooves circumscribing the shaft. The members are parts of an integral element hinged to a fixed support. Mechanism exerting rebalancing force biases the shaft to seat in the V-notches. A conical hole in the element receives a ball therein. A flexible rod is connected to said ball and transmits motion from a differential pressure device tending to unseat said ball from said hole and said shaft from said notches; but unseating is normally prevented by the rebalancing force. If the shaft moves, motion detecting means causes the rebalancing force to change so as to cancel shaft motion. Excessive motion of said rod, however, does cause unseating, but when the excess of motion disappears, the parts reseat in substantially the same relation they had before.

3,396,375
FAIL-SAFE ALARM SYSTEM
Donald D. Low, Oakland, Calif., assignor to the United States of America as represented by the United States Atomic Energy Commission
Filed May 20, 1965, Ser. No. 457,535
10 Claims. (Cl. 340—236)

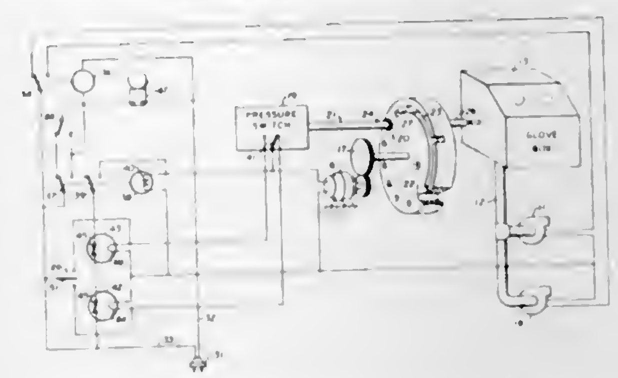

1. In apparatus detecting a change in a first fluid pressure in a system in which said first pressure differs from a second reference fluid pressure, the combination comprising a switch of the class having a first and a second position determined by the fluid pressure at an input, coupling means cyclically communicating said pressure switch to said first pressure and alternately to said reference fluid pressure within a predetermined time period, a first and a second delay relay means alternately energized by said pressure switch at said first and second positions thereof respectively, said relay means having a delay time exceeding one-half of said time period and a pressure change indication means actuated by operation of any one of said relay means when said delay time thereof is exceeded.

3,396,376
ANNUNCIATOR SYSTEM FOR INTERNAL COMBUSTION ENGINES WITH PROVISION FOR AUTOMATIC SHUT DOWN
Allan R. Emerson, Dallas, Tex., assignor to Beta Corporation, a corporation of Texas
Filed Feb. 5, 1965, Ser. No. 430,578
11 Claims. (Cl. 340—267)

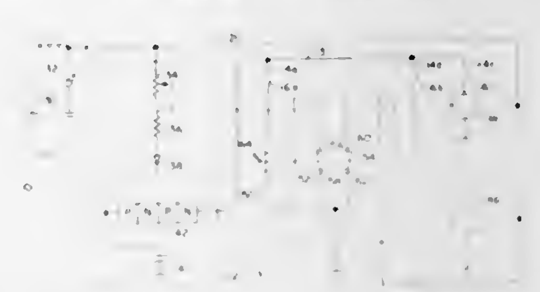

1. An annunicator system for use with an internal combustion engine that comprises:
(a) a plurality of field contact members, each of said field contact members being open when an associated variable is normal and closed when the associated variable is abnormal;
(b) a plurality of parallel branch circuits each comprising one of said field contact members and an associated current sensitive device having a normal and an abnormal state;
(c) a capacitor;
(d) means including a resistor providing a charge path for said capacitor from a portion of an electrical system of an engine which is operated when starting of the engine is begun;
(e) a switching device having two terminals and connected by said two terminals between said capacitor and said parallel branch circuits, said switching device normally exhibiting a high impedance to the flow of current in the direction from said capacitor to said parallel branch circuits and capable of being switched

to a low impedance state in said direction responsive to the charge on said capacitor being at least equal to the breakover voltage of said switching device;
(f) said capacitor being discharged through said switching device and one of said current sensitive devices responsive to the associated field contact member being closed when said capacitor is charged to a voltage at least equal to the breakover voltage of said switching device;
(g) means effective responsive to the flow of current through said one current sensitive device for maintaining said one current sensitive device in the abnormal state; and
(h) means effective responsive to said one current sensitive device being in the abnormal state for indicating the presence of a malfunction and shutting down said engine.

3,396,377
DISPLAY DATA PROCESSOR
Frederick D. Strout, Liverpool, N.Y., assignor to General Electric Company, a corporation of New York
Filed June 29, 1964, Ser. No. 378,696
7 Claims. (Cl. 340—324)

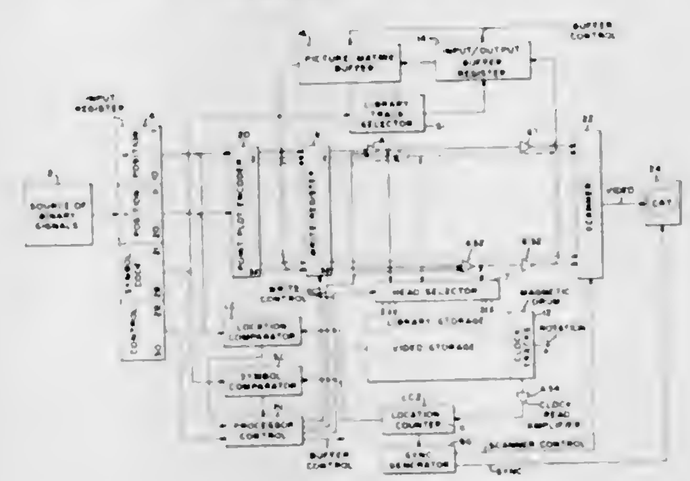

The invention is directed to a display data processor capable of accepting signals in digital or binary form from a computer or other data source, and converting such signals to raster scan signals for generating television or other raster displays. The processor includes a library for storage of symbols to be displayed, includes means for changing library stored symbols by programming, and is capable of point-to-point generation of symbols not available in the library. The processor permits changes in any part of the display from frame to frame, and accomplishes repetitive read out at a flicker free rate.

3,396,378
THERMOCHROMIC DISPLAY SYSTEM
George E. Keith, Jr., Del Mar, Calif., assignor to General Precision Systems Inc., a corporation of Delaware
Filed Aug. 17, 1965, Ser. No. 480,327
5 Claims. (Cl. 340—324)

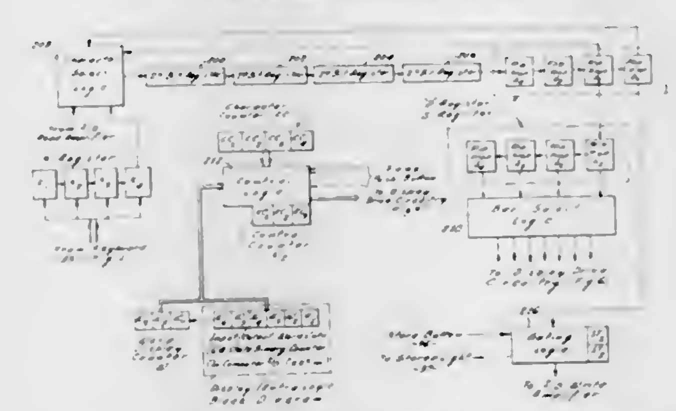

A thermochromic panel having a multiplicity of character displays each of which comprises a plurality of separately energizable "bars" is coupled through logic control circuitry to an associated computer. During each write cycle, information derived from the computer is stored in a circulating register which is adapted to shift one bit time to the right upon each circulation. Since each character code comprises four bit times, new character code information may be unloaded into a four-stage static display register every four circulations. The display register is then coupled through suitable control logic to a preselected character display for energizing the "bars" thereof in accordance with the code stored in the static display register.

3,396,379
BINARY CODED CONTROL
William P. Chapman, Milwaukee, Carleton C. Smith, Menomonee Falls, and John C. Donovan, Milwaukee, Wis., assignors to Johnson Service Company, Milwaukee,, Wis., a corporation of Wisconsin
Filed Sept. 12, 1962, Ser. No. 223,233
21 Claims. (Cl. 340—347)

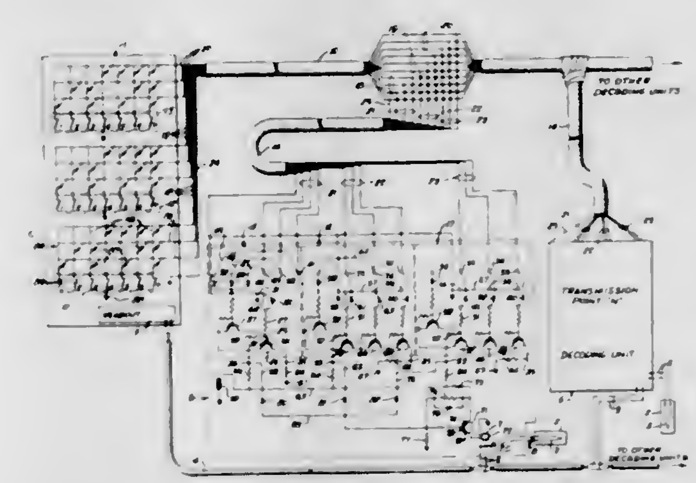

1. In a binary logic coded control employing a multiple character identification code for each of a plurality of controlled means, said code having a plurality of significant positions each of which includes any one of a group of multiple position binary representations,
(a) a plurality of decoding circuits one for each controlled means assigned a predetermined unique identification code, each decoding circuit including a separate decoder for each significant position and each decoder having decoding means responsive to a multiple position encoded input corresponding to a designated multiple position binary representation of said group of binary representations,
(b) a selection line cable for operating said decoders and having a separate line for each position in said binary representation, and
(c) encoding means connected to said selection lines for establishing operating conditions on said selection lines corresponding to one of said identification codes for actuating the corresponding decoders.

3,396,380
DIGITAL-ANALOGUE SIGNAL CONVERTER
Yasutaka Ohashi, Tokyo, Japan, assignor to Nippon Electric Company, Limited, Tokyo, Japan, a corporation of Japan
Filed Aug. 18, 1964, Ser. No. 390,374
Claims priority, application Japan, Aug. 26, 1963, 38/45,589
21 Claims. (Cl. 340—347)

A PCM digital to analogue converter having a source of digits, a DC supply responsive to the highest order digit for selecting a positive or a negative output, first and second converters responsive to succeeding digits for producing first and second analogue signals, respectively,

resistors responsive to an additional digit for variably attenuating the second analogue signal under control of a characteristic of the first analogue signal, and a device for

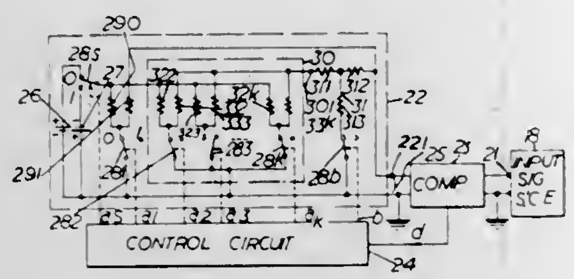

combining the first analogue signal and the attenuated second analogue signal into a composite analogue signal having a polarity determined by the selected polarity of the DC output.

3,396,381
MULTI-INPUT MIXER FOR NULL SENSING DEVICES
Robert K. Aitken, Port Washington, N.Y., assignor to Hazeltine Research, Inc., a corporation of Illinois
Filed Oct. 8, 1964, Ser. No. 402,444
10 Claims. (Cl. 340—347)

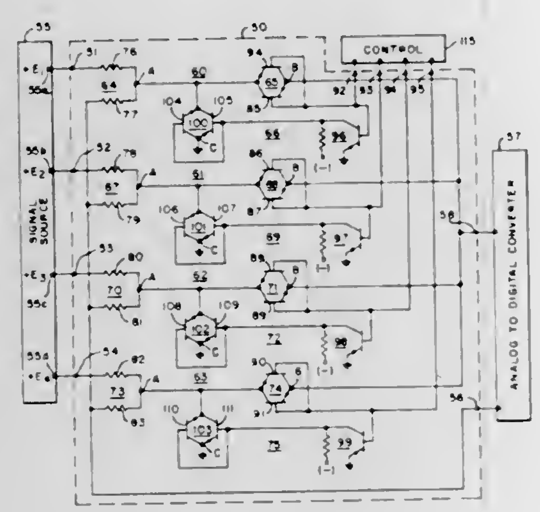

Disclosed is a multi-input mixer which utilizes a plurality of parallel comparison circuits to compare each of a corresponding plurality of input signals with a nulling signal. Each comparison circuit develops a resultant signal representative of the difference in amplitude between its input signal and the nulling signal. A controlled switching circuit is connected between each comparison circuit and a common output terminal for coupling each of said resultant signals to the common output terminal one at a time under the control of a central control circuit. Other embodiments are covered.

3,396,382
TELETYPE CONVERTER SYSTEM
John Paul Jones, Jr., Wynnewood, Pa., assignor to Navigation Computer Corporation, a corporation of Pennsylvania
Filed Nov. 6, 1964, Ser. No. 409,394
7 Claims. (Cl. 340—347)

A code conversion system useful in telemetering applications such as paper tape to telephone line converter devices provides for reading a multiple digit number or word presented in parallel form as across a tape column into serial form for presentation over the telephone or communication line. A shift register is employed to provide timing and sequencing of the data digit by digit into

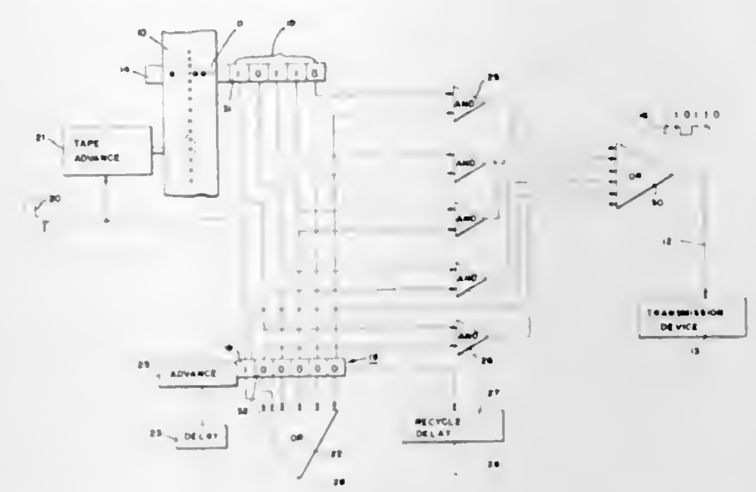

the communication channel, and each shift of data in this register generates an automatic shift pulse for the next step until the digits of the number or word are exhausted.

3,396,383
BINARY DIGITAL-TO-ANALOGUE CONVERTERS
Norman C. Behringer, Scottsdale, Ariz., and Donal R. Treffeisen, Huntington Station, N.Y., assignors to Sperry Rand Corporation, Great Neck, N.Y., a corporation of Delaware
Filed Feb. 23, 1965, Ser. No. 434,537
8 Claims. (Cl. 340—347)

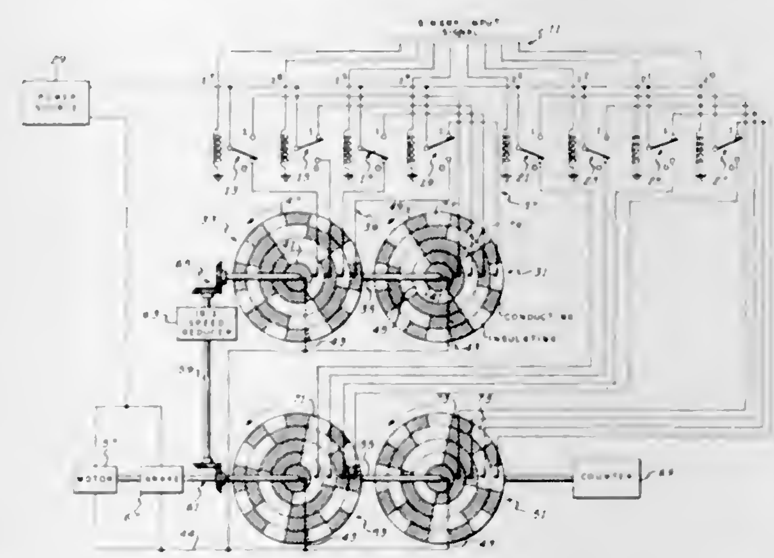

A binary-to-digital converter having pairs of rotatable coded wheels. Binary ZERO and binary ONE digits of the received signal are segregated and applied to the first and second wheels, respectively, of a given pair. The wheels are coded to block successively, each possible combination of binary digits and rotated until complete signal blockage occurs.

3,396,384
CIRCUIT ARRANGEMENT FOR CONVERTING AN ANALOG SIGNAL INTO A PULSE SEQUENCE MODULATED IN NUMBER
Cornelis Henricus Loos and Johannes Bernhard Heinrich Peek, Emmasingel, Eindhoven, Netherlands, assignors to North American Philips Company, Inc., New York, N.Y., a corporation of Delaware
Filed Dec. 8, 1964, Ser. No. 416,799
Claims priority, application Netherlands, Dec. 11, 1963, 301,694
6 Claims. (Cl. 340—347)

An analog to digital converter converts an analog signal to a digital signal that has a number of equal duration pulses in each of a successive group of equal duration periods, the number of pulses produced in each period being a measure of the average value of the analog signal during the period. The digital signal is produced by adding the analog signal to an auxiliary signal, and applying the sum signal to a threshold circuit. The auxiliary signal

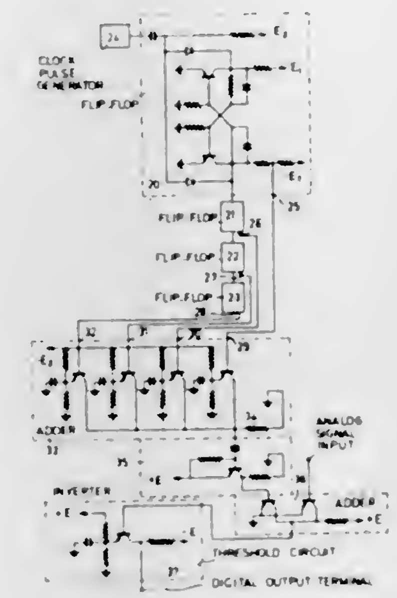

is a periodic signal having a plurality of different levels during each period, with successive levels not differing from their respective preceding levels by a constant amount. Preferably successive levels alternate on opposite sides of a given level.

3,396,385
AIR OPERATED HORN RECEIVING AIR SUPPLY FROM EXHAUST EMISSION CONTROL LINE
Ronald C. Treloar, Saginaw, Mich., assignor to General Motors Corporation, Detroit, Mich., a corporation of Delaware
Filed July 26, 1965, Ser. No. 474,862
3 Claims. (Cl. 340—404)

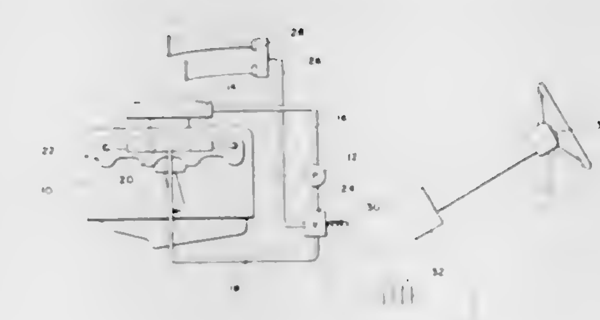

A system for the operation of the air horn of a motor vehicle is disclosed. A pump supplies air under pressure from the air cleaner to the exhaust manifold. A portion of this air may be selectively routed by solenoid operated valve apparatus to the air horn.

3,396,386
RADIATION DETECTING APPARATUS WITH SELF-CHECK
James H. Garfunkel, Minnetonka Village, and Gary W. Spence, St. Louis Park, Minn., assignors to Honeywell Inc., Minneapolis, Minn., a corporation of Delaware
Filed Nov. 8, 1965, Ser. No. 506,820
6 Claims. (Cl. 340—409)

A Geiger tube connected to control a first and a second output, the first output responding to frequent counting of the Geiger tube to indicate the presence of radiation, and the second output responding to the absence of back-

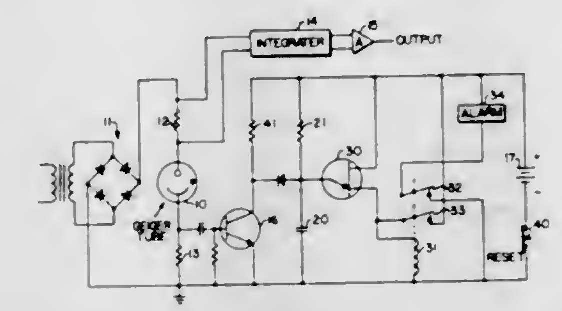

ground counting of the Geiger tube to indicate that the Geiger tube has failed.

3,396,387
SUPERVISED APPARATUS FOR DETECTING SUSPENDED MATTER IN FLUIDS
Harry C. Grant, Jr., Ridgewood, N.J., assignor, by mesne assignments, to Walter Kidde & Company, Inc., Belleville, N.J., a corporation of New York
Original application July 24, 1962, Ser. No. 212,097, now Patent No. 3,240,109, dated Mar. 15, 1966. Divided and this application Sept. 23, 1965, Ser. No. 489,554
2 Claims. (Cl. 340—410)

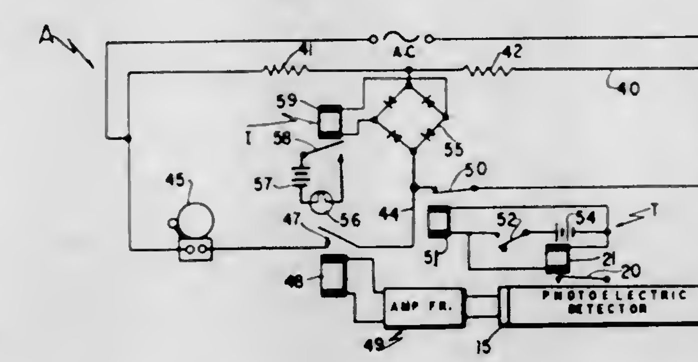

The present invention relates to apparatus of the light responsive type for detecting and indicating the presence of suspended matter in fluids, and, more particularly, to a test network and an indicating network for supervising the integrity of such apparatus.

3,396,388
HIGH POWER RADAR SYSTEM WITH FAIL-SAFE RECEIVER PROTECTION
Harry Goldie, Randallstown, Md., assignor to Westinghouse Electric Corporation, Pittsburgh, Pa., a corporation of Pennsylvania
Filed Feb. 13, 1967, Ser. No. 615,476
7 Claims. (Cl. 343—5)

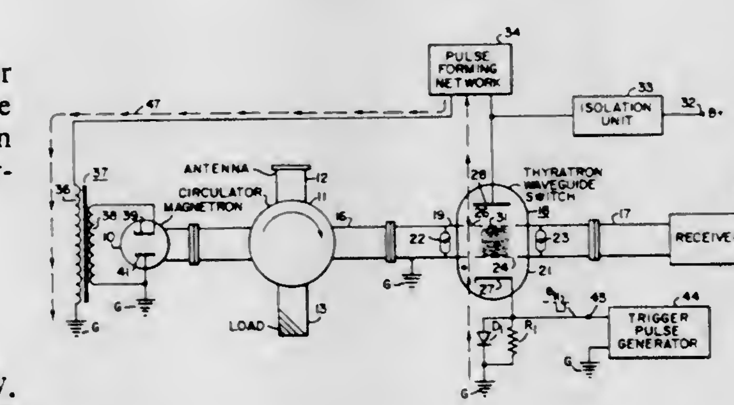

Fail-safe receiver protection in a high power radar system is provided by a thyratron wave guide switch, hereinafter referred to as TWS, inserted between the circulator and the receiver. Since a TWS is a hydrogen thyratron

device in which a section of rectangular wave guide is used as a control grid the wave guide section constituting the grid is a part of the wave guide transmission line. This line is located between the circulator and the receiver while the cathode-anode circuit of the TWS constitutes the switch in the primary circuit of the magnetron pulse transformer to discharge the pulse forming network grid. Thus, in effect, an electrical interlock is provided which insures that the receiver protection is initiated before the magnetron oscillation burst can start. The TWS is operated in grounded-grid circuit configuration.

3,396,389
AUTOMATIC AND CONTINUOUSLY VARIABLE RADAR RECEIVER GAIN CONTROL
Lloyd R. Crump, Silver Spring, Md., assignor to the United States of America as represented by the Secretary of the Navy
Filed Sept. 28, 1967, Ser. No. 671,497
4 Claims. (Cl. 343—5)

A circular potentiometer resistor has first and second opposing pairs of contacts 180° apart which receive ship roll and pitch signals respectively. A potentiometer contact arm moves in unison with the azimuthal movement of a radar antenna and feeds gain control signals to the radar receiver. The control signals reduce receiver gain when the antenna is pointing downward and increase gain when the antenna is pointing upward.

3,396,390
PROXIMITY WARNING SYSTEM
Robert F. Riggs and Demster L. Teague, Charlottesville, Va., assignors to Sperry Rand Corporation, a corporation of Delaware
Filed Jan. 27, 1967, Ser. No. 612,275
9 Claims. (Cl. 343—11)

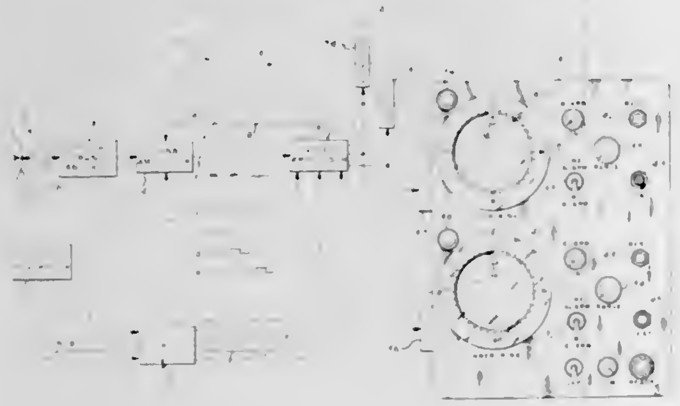

An automatic proximity warning device for indicating the presence and bearing of an intruding craft passing through one or more guard rings circumscribing a craft to be protected.

3,396,391
TERRAIN-FOLLOWING SYSTEM
James O. Anderson, Fullerton, David Rosenstock, Norco, and Charles L. Vehrs, Anaheim, Calif., assignors to North American Rockwell Corporation, a corporation of Delaware
Filed Dec. 20, 1963, Ser. No. 332,996
24 Claims. (Cl. 343—7)

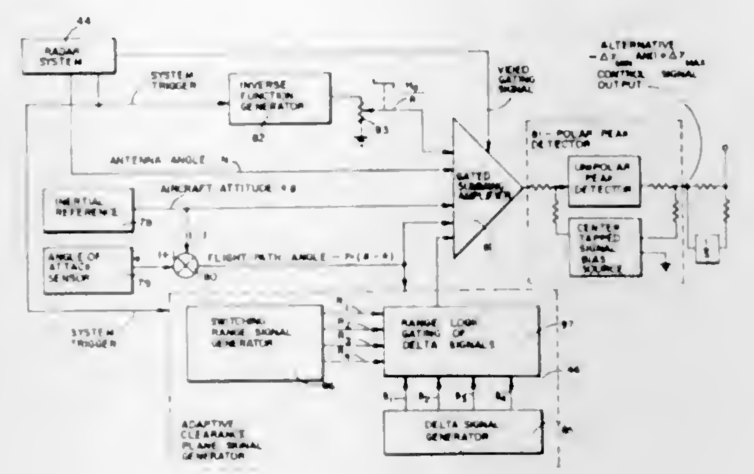

1. In a vehicle-borne system employing a forward ranging sensor:
means for generating a signal indicative of a preselected clearance distance of a vehicle from a sensed terrain obstacle; and
means responsive to the flight path angle of said vehicle for varying said preselected clearance distance signal.

3,396,392
CW RADAR SYSTEM
William Fishbein, New Shrewsbury, and Otto E. Rittenbach, Neptune, N.J., assignors to the United States of America as represented by the Secretary of the Army
Filed Apr. 5, 1962, Ser. No. 185,790
10 Claims. (Cl. 343—14)

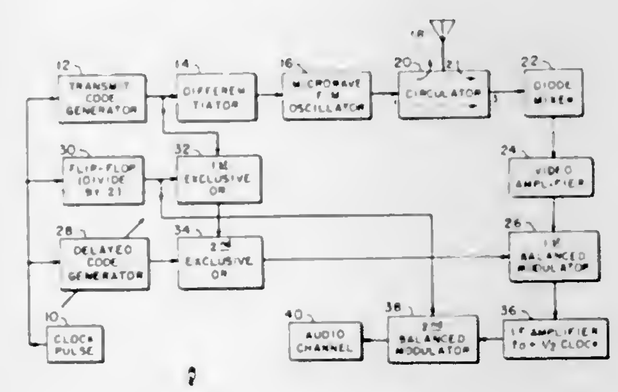

1. A CW radar system comprising
a microwave RF energy source,
a source of clock pulses, means for deriving a random pulse code from said clock pulses,
means responsive to said random pulse code signals for modulating the output frequency of said RF energy such that the phase of the output RF energy is at one phase level at the initiation of each of said code signals and at a second phase level shifted 180° with respect to said one phase level at the termination of each of said pulse code signals,
common antenna means for radiating said alternately phase shifted RF energy and to receive a wave reflected from a distant target, said received wave being delayed a prescribed time corresponding to the range of the distant target,

means for mixing said reflected wave with a portion of said radiated wave whereby a beat video-form signal is produced,
means responsive to said clock pulse signals for producing a time-delayed replica of said RF modulating signal, said time delay corresponding to the range of the distant target,
means for generating a signal at one-half the frequency of said clock pulses,
a first comparison circuit having said beat video-form frequency applied thereto as one input,
a second input signal applied to said first comparison means,
said second input signal being derived from the combined outputs of said random code signals, said one-half clock frequency signal and said time-delayed replica signal to produce a code-like signal such that the output of said first comparison circuit comprises a signal having a strong component at said one-half clock frequency,
means for amplifying said strong component signal at said one-half clock frequency,
and a second comparison circuit responsive to said amplified signal and said one-half clock pulse frequency signal whereby there is produced an audio signal corresponding to the Doppler frequency of said target signal.

3,396,393
MEASUREMENT OF THE DISTANCE BETWEEN TWO POINTS BASED ON MEASURING THE TRAVELLING TIME OF ELECTROMAGNETIC WAVES
Richard Wagner, Nuremberg, Germany, assignor to Grundig E.M.V. Elektro-Mechanische Versuchsanstalt Inh. Max Grundig, Furth, Bavaria, Germany
Filed Jan. 11, 1967, Ser. No. 608,615
Claims priority, application Germany, Jan. 14, 1966, G 45,716
4 Claims. (Cl. 343—14)

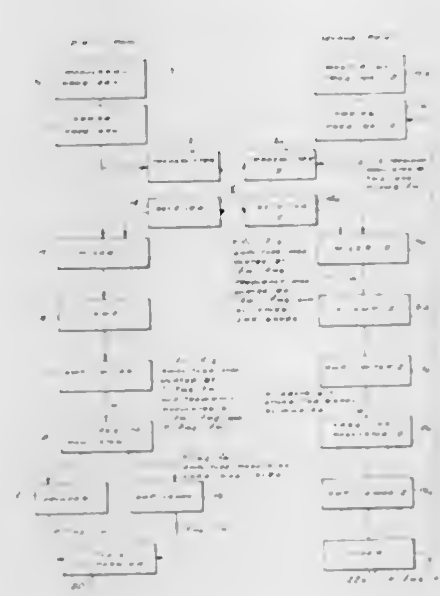

Frequency modulated waves of slightly different carrier and modulation frequencies are generated at each point, transmitted from each point to the other, and heterodyned with the locally generated waves.

The resultant intermediate frequency waves are amplified over such a bandwidth as to include the first order sidebands of the modulation frequency. At each point, amplitude limiting, frequency demodulation and amplitude demodulation follow. At the second point the resultant wave is applied as a second modulation. At the first point, the phases of the amplitude demodulated and frequency demodulated waves are compared to yield a measure of the distance between the points.

3,396,394
DIRECTIVE ANTENNAS
John D. Kiesling, East Brunswick, N.J., assignor to Radio Corporation of America, a corporation of Delaware
Filed Sept. 15, 1965, Ser. No. 487,485
6 Claims. (Cl. 343—100)

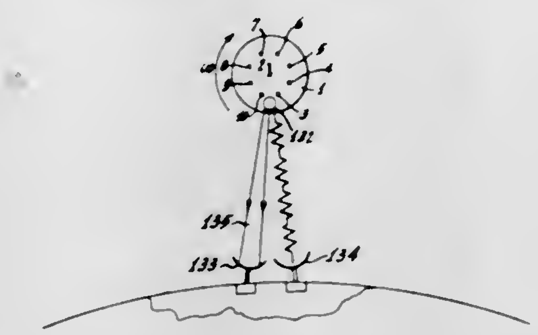

A body adapted to spin about an axis is provided with an array of antennas, the antennas being of the type whereby a pencil beam radiation pattern is emitted perpendicular to the antenna elements. The antenna elements are switched on and off by control circuitry such that, for example, two or more of the elements are always on. The antenna elements, that are on at any time, are by the control circuitry provided selected as those elements directed, for example, towards an earth station. The rate of switching these elements is controlled so that they are switched counter to the spin velocity of the body in order to maintain the radiation pattern towards a desired location irrespective to the spin.

3,396,395
RECEIVER SYSTEM INCLUDING SPURIOUS SIGNAL DETECTOR
David M. Ball, deceased, late of Mountain View, Calif., by Regina A. Ball, administratrix, Mountain View, Calif., and Richard I. Disman, Sunnyvale, Calif., assignors to Sylvania Electric Products Inc., a corporation of Delaware
Filed Sept. 29, 1966, Ser. No. 583,021
12 Claims. (Cl. 343—113)

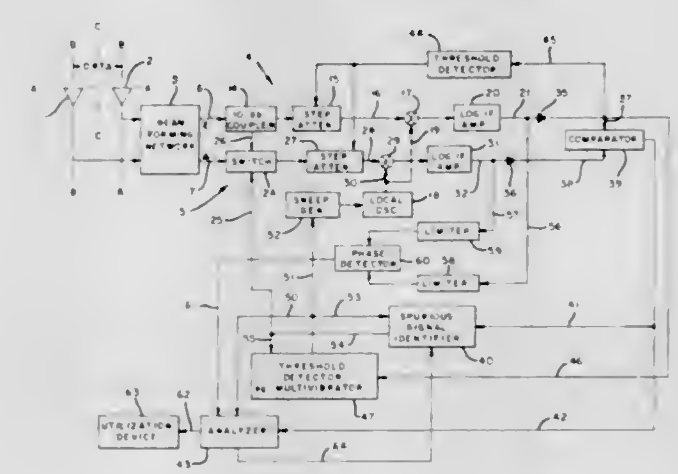

In a sum and difference monopulse direction finding system, a received signal and a predetermined portion (10 db down) thereof are mixed with a local oscillator (LO) signal in respective mixers. The intermediate frequency (IF) signals from the mixers are applied to a comparator. If the ratio of the magnitudes of the mixer outputs is 10 db, the comparator output indicates that the IF signals are produced by a desired received signal. If this ratio is substantially greater than 10 db, the comparator output indicates that the mixer outputs are spurious IF signals produced by an undesired received signal.

3,396,396
AIRCRAFT NOSE RADOME WITH CERAMIC COVER MOUNTED ON METALLIC FRAMEWORK
Thomas E. Charlton, Orland Park, Ill., and Ronald K. Long, Columbus, Ohio, assignors to the United States of America as represented by the Secretary of the Air Force
Filed Nov. 30, 1965, Ser. No. 510,716
5 Claims. (Cl. 343—708)

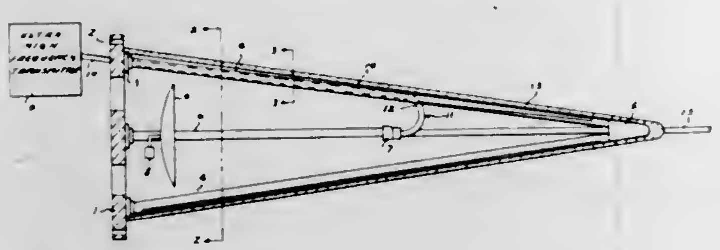

A radome is disclosed formed of thin alumina and having a hollow cone-like configuration. The radome is supported on a metal frame formed of longitudinally extending pipes spaced about a support plate and converging down to a pointed hollow metal member. Circumferential straps of metal are equidistantly spaced along the pipes at a considerable distance apart and crossing the pipes in a rectilinear fashion to provide optimum "open window" space between the metal parts. The alumina covering can be molded in one piece but in the case of large radomes are constituted of arcuate slabs fitted together over the framework and provided with interfitting ledges and undercuts which hold them in place. The pipes are hollow and can be cooled by circulating water therethrough without affecting the efficiency of the radome.

3,396,397
DIELECTRIC ZOOM LENS FOR MICROWAVE BEAM SCANNING
Michael A. Kott, Baltimore, Md., assignor to the United States of America as represented by the Secretary of the Air Force
Filed Oct. 20, 1965, Ser. No. 499,123
2 Claims. (Cl. 343—754)

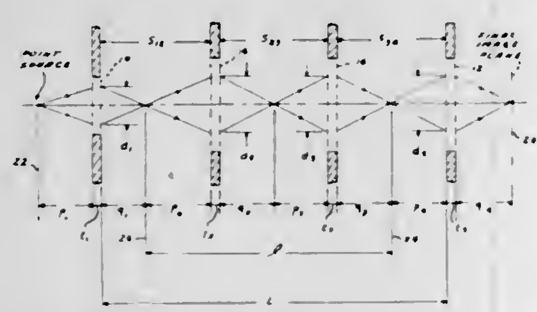

A pair of relatively movable negative dielectric lenses are positioned between two stationary positive dielectric lenses with all of the lenses being located on a common optical axis. Microwave energy is directed toward the lens system by a small feed horn.

3,396,398
SMALL UNIDIRECTIONAL ANTENNA ARRAY EMPLOYING SPACED ELECTRICALLY ISOLATED ANTENNA ELEMENTS
John H. Dunlavy, Jr., Adelphi, Md., assignor to Antenna Research Associates, Inc., Beltsville, Md., a corporation of Texas
Filed Aug. 25, 1964, Ser. No. 391,860
10 Claims. (Cl. 343—814)

An antenna array is disclosed in which a pair of antenna elements are connected to a common feed line through a unidirectional coupling hybrid to suppress mutual currents between the dipoles. A differential time delay related to the spacing between antenna elements

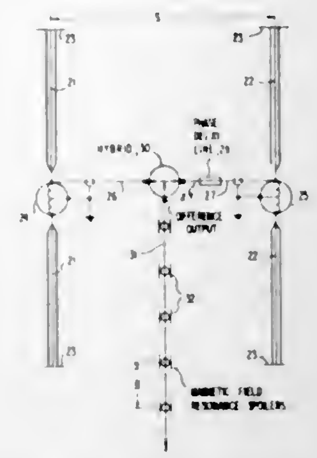

is introduced into the signals received from the respective antenna elements to provide a broad-band characteristic with a unidirectional pattern.

3,396,399
ULTRA-HIGH FREQUENCY FISHBONE TYPE TELEVISION ANTENNA
John R. Winegard, Burlington, Iowa, assignor to The Winegard Company, Burlington, Iowa, a corporation of Illinois
Filed Mar. 24, 1965, Ser. No. 442,289
9 Claims. (Cl. 343—811)

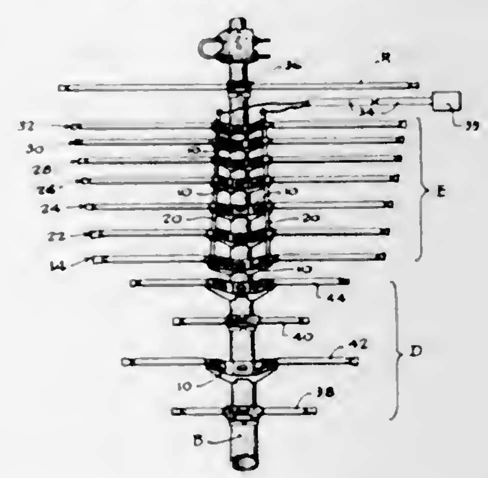

An improved antenna structure especially suited for coverage of the ultra-high frequency television band wherein a plurality of full wave resonant dipole elements are utilized in a closed spaced, coplanar array to provide substantially uniform impedance and high gain across the entire operating range of frequencies.

3,396,400
RADAR TRANSPARENT COVERING
Charles M. Kelly and Bernard D. Raffel, Akron, Ohio, assignors to Goodyear Aerospace Corporation, Akron, Ohio, a corporation of Delaware
Filed Mar. 30, 1965, Ser. No. 443,981
2 Claims. (Cl. 343—872)

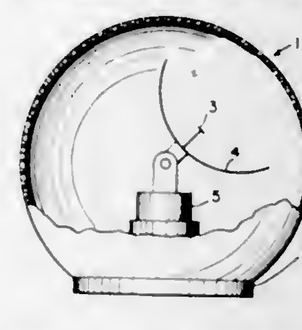

A covering which will reflect infra-red, visible, and ultra-violet waves and allow the passage of selected high frequency electromagnetic waves within the radar bands

which might be utilized for covering any area where it is desired to utilize these characteristics of the material, such as radomes and wave guides. This is accomplished by utilizing a lightweight thin metallic coating which acts like a mirror, but which is divided into a plurality of geometrically similar electrically disconnected areas appropriately arranged to allow passage of the desired electromagnetic waves.

3,396,401
APPARATUS AND METHOD FOR THE MARKING OF INTELLIGENCE ON A RECORD MEDIUM
Kenneth K. Nonomura, Honolulu, Hawaii (2739 Culver Road, Apt. B-34, Rochester, N.Y. 14622)
Filed Oct. 20, 1966, Ser. No. 588,146
11 Claims. (Cl. 346—1)

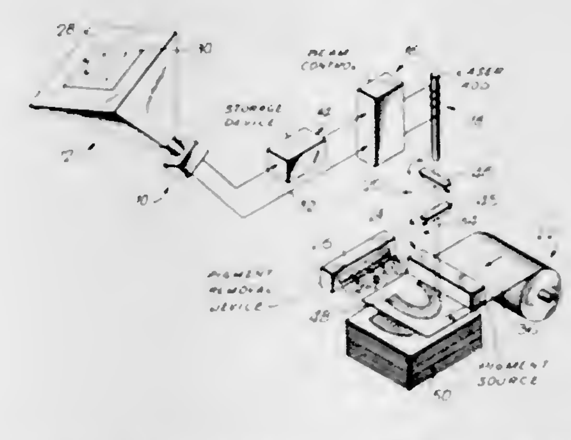

Apparatus and method wherein laser beam is used for thermally fixing pigment or the like to paper or other such record medium.

3,396,402
X-Y RECORDER HAVING SINGLE CONTINUOUS CABLE DRIVE SYSTEM
Charles Frederic de Mey II, West Redding, Conn., assignor to The Perkin-Elmer Corporation, Norwalk, Conn., a corporation of New York
Filed Dec. 5, 1966, Ser. No. 598,995
6 Claims. (Cl. 346—29)

In one type of chart recorder, a marker element is driven in one co-ordinate direction along a carriage, and the carriage is driven in a different (e.g., perpendicular) direction so as to make a graphical record on the chart. Different parts of a single continuous cable are driven by separate motors, and different points of the cable are attached to the marker and to the carriage. The continuous cable is so arranged about various pulleys that a carriage drive motor moves the cable portion attached to the carriage without causing pen movement; and the pen motor drives the pen portion of the cable through a special pulley-type of differential so as to decouple the pen drive from moving the carriage. In this way, two separate motors independently control the marker and carriage movements, despite the use of a single connecting cable.

3,396,403
SYNCHRONIZED CHART RECORDER
Michael Alan Ford, Slough, and Samuel Francis Desmond Orr, Beaconsfield, England, assignors to Perkin-Elmer Limited, Beaconsfield, England, a British company
Filed Nov. 29, 1966, Ser. No. 597,699
Claims priority, application Great Britain, Nov. 29, 1965, 50,610/65
18 Claims. (Cl. 346—33)

The drive connection between the wavelength scan of a spectrophotometer and the driven chart of its recorder includes a releasable coupling means of the dog-clutch type. The coupling may be disconnected either manually or automatically by the instrument so as to allow the scanning drive to be run back to a previous position without moving the chart. The driven and driving parts of the coupling are of a type (a pin which may engage only a small number of specific holes in a disc) that insures reengagement of a coupling will occur at the same "synchronized" relationship between the wavelength scan and the chart. Therefore both repeated, superimposed analyses and interrupted analyses (as when two orders of the same diffraction grating are used for different parts of the recorded spectrum) may be made without loss of the correct relationship between the recording chart and the wavelength scan drive.

3,396,404
INPUT-SEQUENCING ARRANGEMENTS FOR MULTI-POINT RECORDERS
Kenneth B. Parker, Jr., Norristown, Pa., assignor to Leeds & Northrup Company, Philadelphia, Pa., a corporation of Pennsylvania
Filed Mar. 1, 1967, Ser. No. 619,679
10 Claims. (Cl. 346—34)

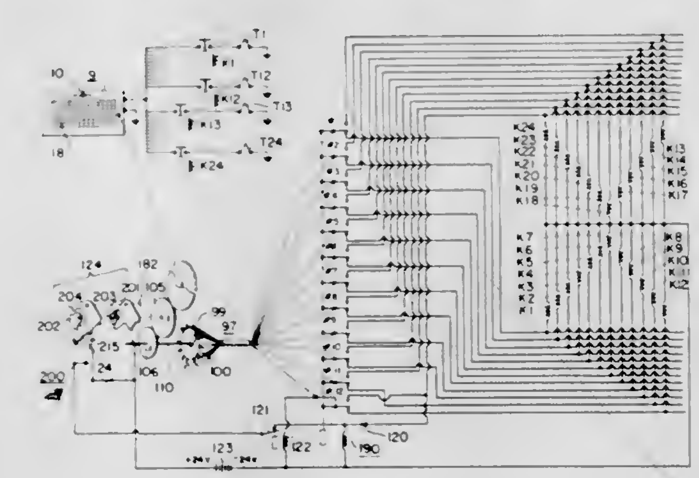

An electromechanical sequencing arrangement including a rotary multi-position switch, a transfer switch having actuating mechanism coupled to the rotary switch, a

multi-pole relay, and auxiliary circuitry including a diode and auxiliary relay means of either electromagnetic or solid-state type, cooperating with the rotary and transfer switches in control of energization of the multi-pole relay.

3,396,405
DRUM PRINTER FOR RECORDING BLOOD PRESSURE
Henry B. Whitmore, Rte. 5, Box 369, San Antonio, Tex. 78211
Filed June 13, 1967, Ser. No. 646,160
4 Claims. (Cl. 346—72)

Blood pressure pulse operates a bellows to rock a bell crank to rotate a drum which carries raised digits. A solenoid is also pulse operated to slam a hammer against the advanced numeral causing a numeric record of blood pressure to be printed. The solenoid-return-spring operates

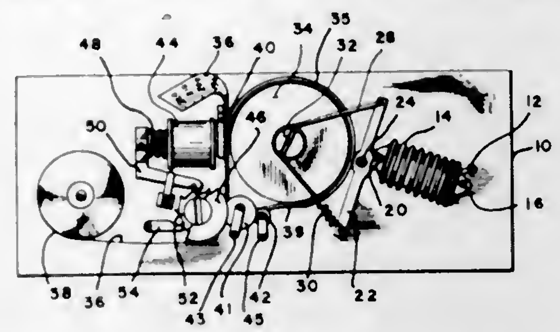

ratchet and pawl to advance printing strip to new position.

DESIGNS

AUGUST 6, 1968

211,844
PUFFED SNACK FOOD PRODUCT
Donald L. Andersen, Minneapolis, Minn., assignor to General Mills, Inc., a corporation of Delaware
Filed Feb. 1, 1967, Ser. No. 5,641
Term of patent 14 years
(Cl. D1—3)

211,845
MINERAL BLOCK FOR A BIRDCAGE
Edgar F. Bailey, Boonton, N.J., assignor to Hartz Mountain Products Corporation, New York, N.Y., a corporation of Delaware
Filed July 7, 1967, Ser. No. 7,729
Term of patent 14 years
(Cl. D1—27)

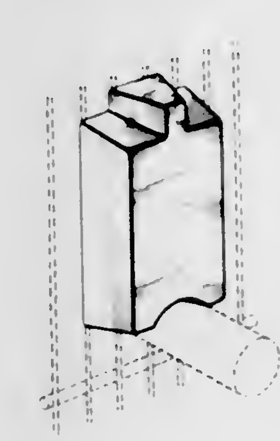

211,846
GIRDLE
Carl R. Glines, Dover, Del., assignor to Sarong, Inc., Sarong Park, Dover, Del., a corporation of Delaware
Filed Jan. 30, 1964, Ser. No. 78,424
Term of patent 14 years
(Cl. D2—2)

211,847
SHOE ORNAMENT
Etienne Aigner, 40 5th Ave., New York, N.Y. 10011
Filed Sept. 27, 1967, Ser. No. 8,765
Term of patent 14 years
(Cl. D2—315)

211,848
BASEBALL GLOVE OR SIMILAR ARTICLE
Joseph N. Khazzam, Baldwin, N.Y. (% Regent Sports Co., 131 Varick St., New York, N.Y. 10013)
Filed Aug. 9, 1967, Ser. No. 8,168
Term of patent 14 years
(Cl. D2—361)

211,849
SLIDE FASTENER ACTUATOR
Herman Epstein, 1210 E. 9th St., Kansas City, Mo. 64106
Filed July 18, 1966, Ser. No. 3,105
Term of patent 14 years
(Cl. D2—415)

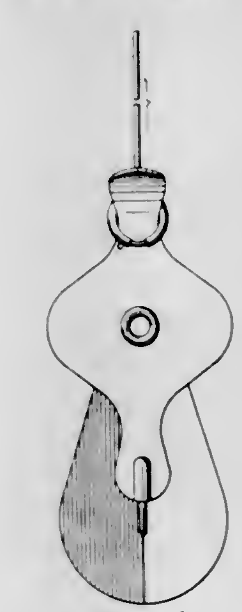

211,850
COMBINED RECHARGING STAND AND TOOTHBRUSH HOLDER
John C. Shalvoy, Fairfield, Conn., assignor to General Electric Company, a corporation of New York
Filed Aug. 24, 1967, Ser. No. 8,384
Term of patent 3½ years
(Cl. D4—16)

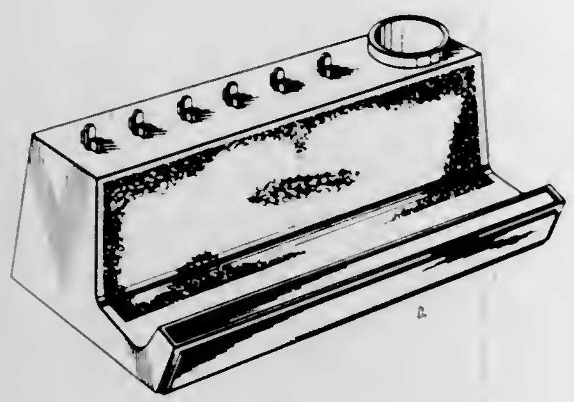

211,851
COMBINED BRUSH AND SPONGE
Dale H. Ballard, Salt Lake City, Utah, assignor to Deseret Pharmaceutical Company, Inc., Sandy, Utah
Filed Apr. 3, 1967, Ser. No. 6,504
Term of patent 14 years
(Cl. D4—17)

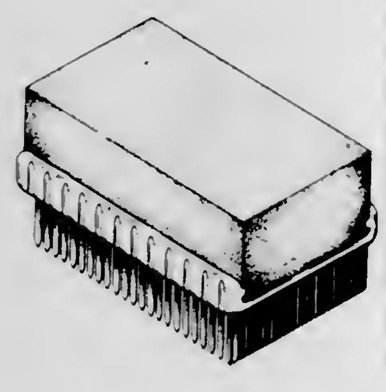

211,852
COMBINED DESK, LOCKER AND BUNK BED UNIT
Anthony A. La Rocca and Shirley L. La Rocca, both of 18 Partridge Ave., Somerville, Mass. 02145
Filed July 19, 1967, Ser. No. 7,873
Term of patent 14 years
(Cl. D5—4)

211,853
BOTTLE OR SIMILAR ARTICLE
Clifford Harris Roberts, New York, N.Y., assignor to Colgate-Palmolive Company, New York, N.Y., a corporation of Delaware
Filed May 10, 1967, Ser. No. 7,054
Term of patent 14 years
(Cl. D9—33)

211,854
BOTTLE
William C. Sizer, Box 921, Milwaukee, Wis. 53201
Filed Dec. 27, 1967, Ser. No. 9,938
Term of patent 14 years
(Cl. D9—42)

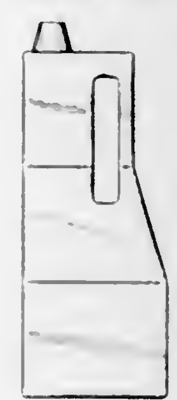

211,855
SHIPPING CONTAINER
Frederick E. Ullman, Winnetka, Ill., assignor to Inland Steel Company, Chicago, Ill., a corporation of Delaware
Filed Mar. 28, 1967, Ser. No. 6,411
Term of patent 14 years
(Cl. D9—170)

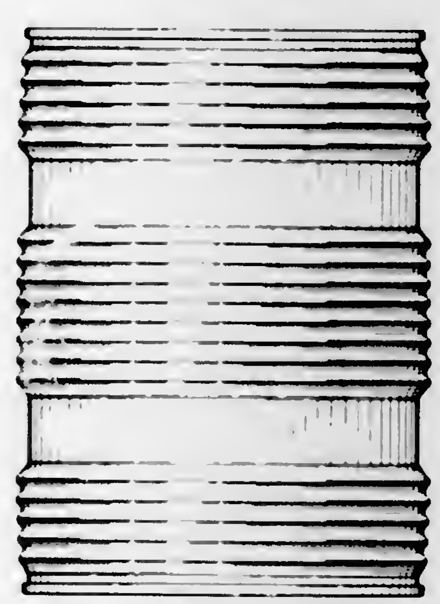

211,856
SHIPPING CONTAINER
Frederick E. Ullman, Winnetka, Ill., assignor to Inland Steel Company, Chicago, Ill., a corporation of Delaware
Filed Mar. 28, 1967, Ser. No. 6,414
Term of patent 14 years
(Cl. D9—170)

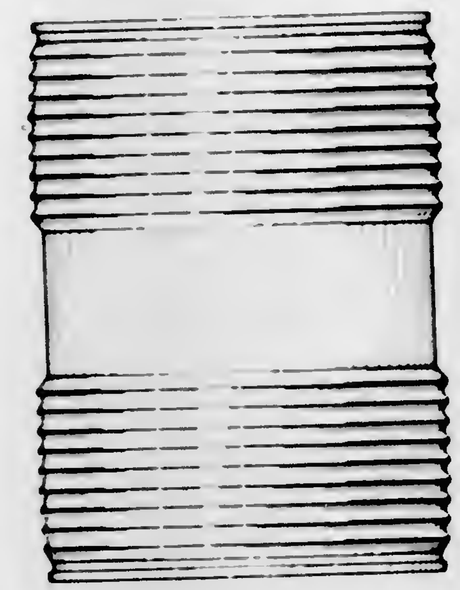

211,857
RAZOR BLADE DISPENSER
Frank F. Simpson, Staines, England, assignor to Wilkinson Sword Limited, London, England, a British company
Filed May 8, 1967, Ser. No. 7,005
Claims priority, application Great Britain Nov. 12, 1966
Term of patent 14 years
(Cl. D9—187)

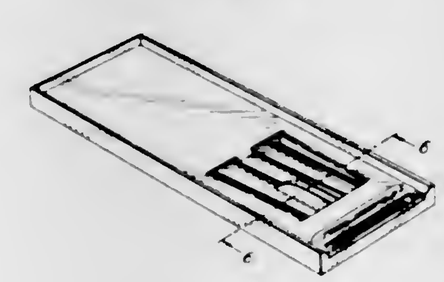

211,858
SHIPPING CONTAINER
Michael P. Wadzita, Arlington Heights, Ill., assignor to Uniroyal, Inc., New York, N.Y., a corporation of New Jersey
Filed Apr. 3, 1967, Ser. No. 6,493
Term of patent 14 years
(Cl. D9—222)

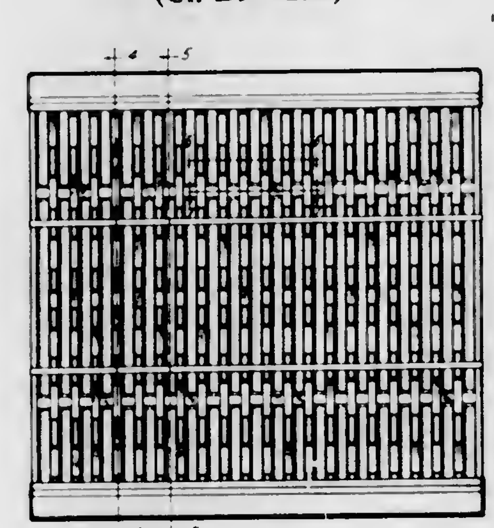

211,859
CONTAINER FOR MUSHROOMS AND OTHER PRODUCE
Michael A. Tishuk, Hackettstown, N.J., assignor to United States Mineral Products Company, Stanhope, N.J., a corporation of New Jersey
Filed July 12, 1967, Ser. No. 7,781
Term of patent 14 years
(Cl. D9—224)

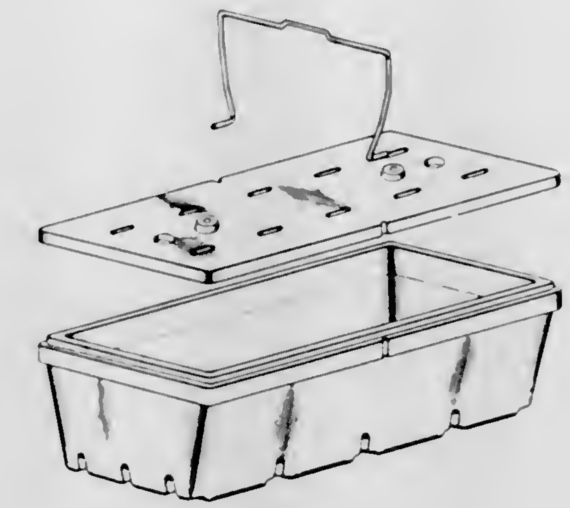

211,860
PULL
James R. Deadrick, Winston-Salem, N.C., assignor to Stewart-Warner Corporation, Chicago, Ill., a corporation of Virginia
Filed Dec. 14, 1966, Ser. No. 5,032
Term of patent 14 years
(Cl. D10—8)

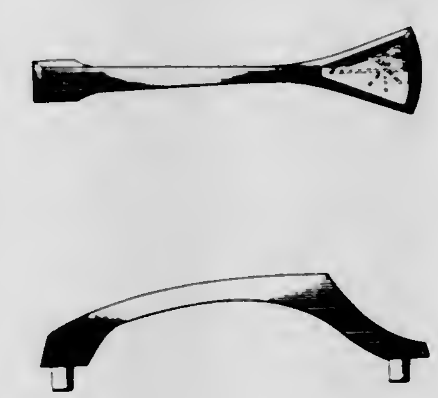

211,861
HOUSING TRACT
Fred C. Sproul, P.O. Box 1038, Oceanside, Calif. 92054
Filed Jan. 11, 1967, Ser. No. 5,382
Term of patent 14 years
(Cl. D13—1)

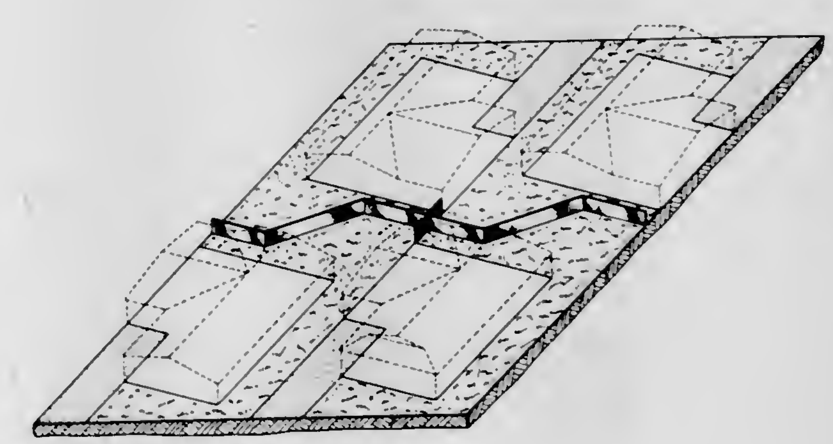

211,862
WINDOW SHUTTER
Alvin M. Stanfield, Jr., 8927 National Blvd., Los Angeles, Calif. 90013
Filed Apr. 11, 1967, Ser. No. 6,627
Term of patent 14 years
(Cl. D13—1)

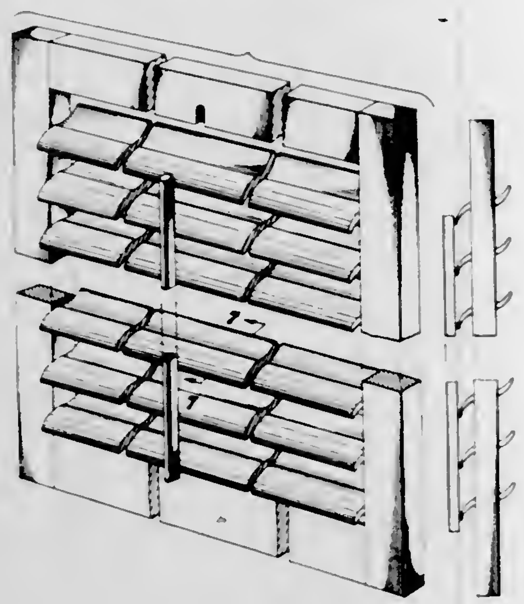

211,863
GARAGE DOOR
Paul E. Pemberton, Irving, and Sheldon D. Loose and Anthony E. Greene, Dallas, Tex., assignors to Overhead Door Corporation, Dallas, Tex., a corporation of Indiana
Filed June 26, 1967, Ser. No. 7,596
Term of patent 14 years
(Cl. D13—1)

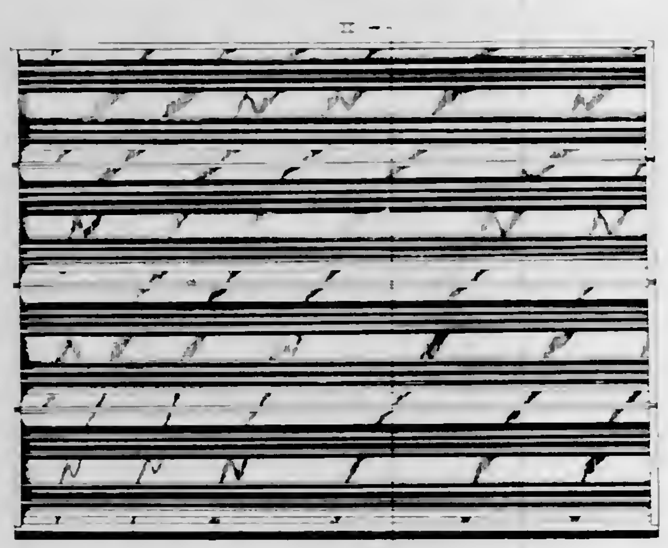

211,864
DIVING BOARD
Carl R. Meyer, 2512 E. Vine St., West Covina, Calif. 91722
Filed Oct. 2, 1967, Ser. No. 8,816
Term of patent 14 years
(Cl. D13—1)

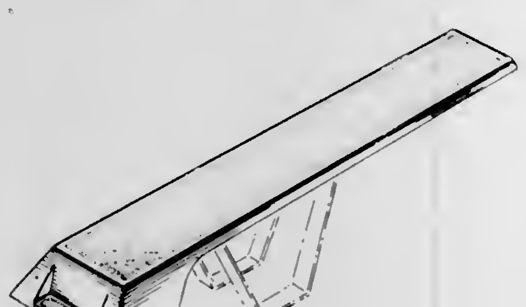

211,865
BUILDING
James E. Widner, Leawood, Kans., assignor to Robo-Wash, Inc., Kansas City, Mo., a corporation of Missouri
Filed Jan. 8, 1968, Ser. No. 10,092
Term of patent 14 years
(Cl. D13—1)

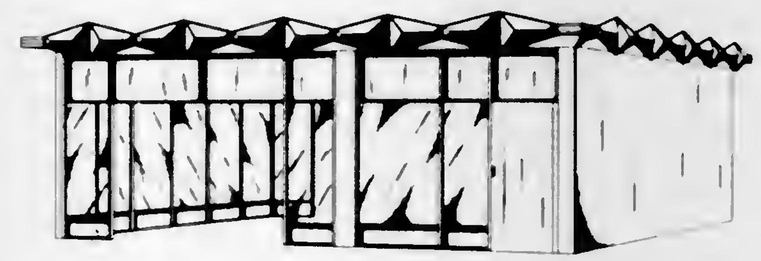

211,866
VEHICLE BODY
Eugene A. Tate and Robert H. Gilman, Durant, Okla., assignors to Hercules Gallon Products, Inc., Gallon, Ohio, a corporation of Ohio
Filed Aug. 14, 1967, Ser. No. 8,259
Term of patent 14 years
(Cl. D14—3)

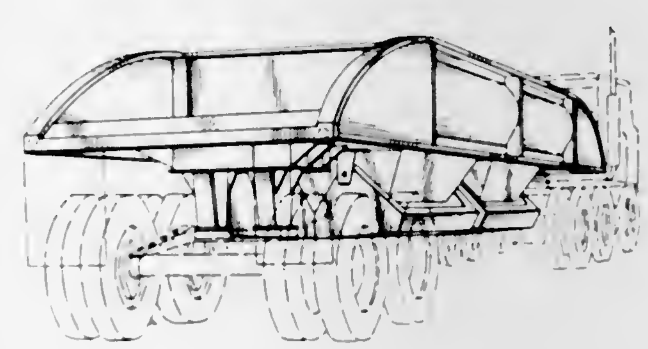

211,867
SLED
Richard L. Trumley, Charlotte, Mich., assignor to General Aluminum Products, Inc., Charlotte, Mich., a corporation of Michigan
Filed Sept. 13, 1967, Ser. No. 8,582
Term of patent 14 years
(Cl. D14—24)

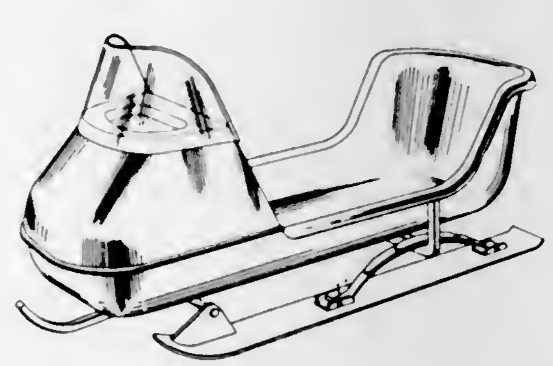

211,868
STOOL
Herbert E. Spencer, 3852 Division Ave., Grand Rapids, Mich. 49508
Filed June 7, 1967, Ser. No. 7,400
Term of patent 14 years
(Cl. D15—8)

211,869
FRAME FOR A COUCH
Howard Philip Doner, R.R. 2, Whitby, Ontario, Canada
Filed Feb. 24, 1967, Ser. No. 5,945
Claims priority, application Canada Oct. 31, 1966
Term of patent 14 years
(Cl. D15—11)

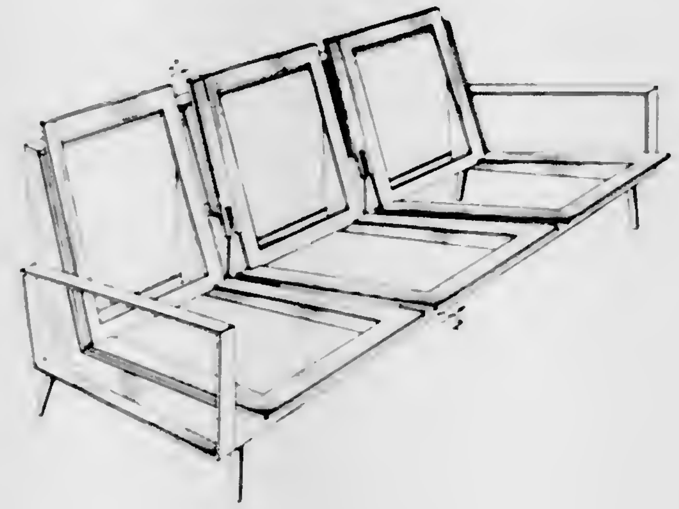

211,870
ELECTROLYTIC DEVICE FOR REMOVING METALS FROM SPENT PHOTOGRAPHIC SOLUTIONS
Otis J. Cothran, 36 Gurley Ave., Greenville, S.C. 29605
Filed Mar. 27, 1967, Ser. No. 6,397
Term of patent 14 years
(Cl. D16—2)

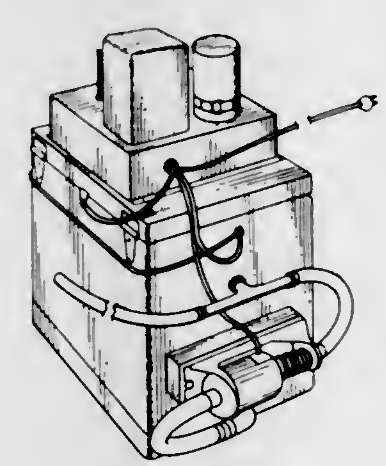

211,871
FISHING LURE
Edward N. Campbell, 4068 NW. 61st 74126, and Bruce E. Long, 5523 Colfax Place 73112, both of Oklahoma City, Okla.
Filed Dec. 26, 1967, Ser. No. 9,916
Term of patent 14 years
(Cl. D22—28)

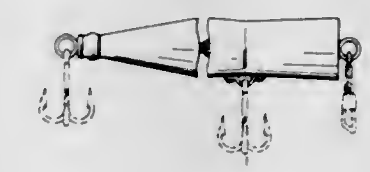

211,872
CHECK VALVE
Loyd L. Reynolds, 21 W. Reno, Oklahoma City, Okla. 73102
Filed Dec. 14, 1967, Ser. No. 9,775
Term of patent 14 years
(Cl. D23—22)

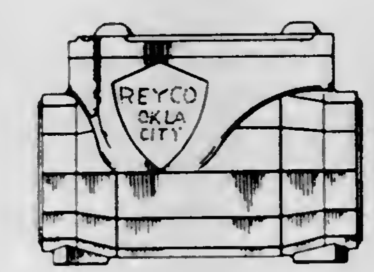

211,873
COMBINED BATHTUB SPOUT, HAND GRIP, SOAP HOLDER AND CONTROL KNOB
Paul A. Mongerson, Elyria, Ohio, assignor to Standard Screw Company, Hartford, Conn., a corporation of New Jersey
Filed Nov. 14, 1967, Ser. No. 9,550
Term of patent 14 years
(Cl. D23—32)

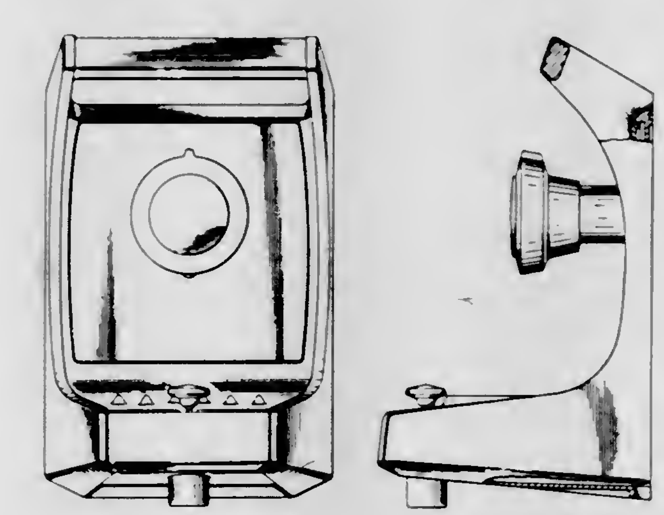

211,874
COMBINED BATHTUB SPOUT AND SOAP HOLDER
Paul A. Mongerson, Elyria, Ohio, assignor to Standard Screw Company, Hartford, Conn., a corporation of New Jersey
Filed Dec. 20, 1967, Ser. No. 9,854
Term of patent 14 years
(Cl. D23—32)

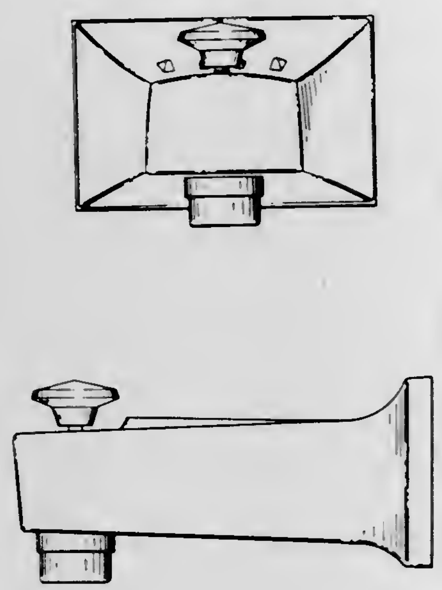

211,875
VENT COVER FOR STANDPIPES OR THE LIKE
William V. Porter, 173 Seale Road, San Antonio, Tex. 78219
Filed July 11, 1967, Ser. No. 7,758
Term of patent 14 years
(Cl. D23—41)

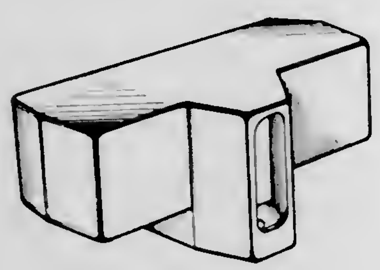

211,876
COMBINED BATH TUB AND GRAB RAILS
Donald W. Doman, Janesville, Wis., assignor to Kohler Co., Kohler, Wis., a corporation of Wisconsin
Filed Feb. 20, 1968, Ser. No. 10,646
Term of patent 14 years
(Cl. D23—55)

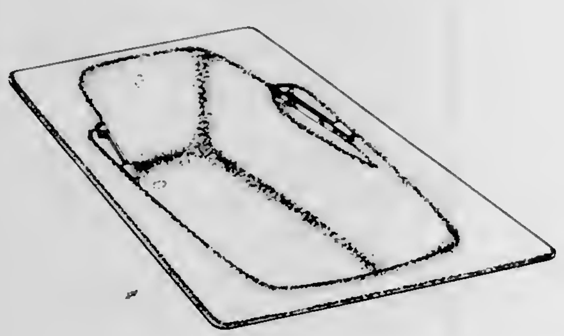

211,877
COMBINED BATH TUB AND GRAB RAILS
Donald W. Doman, Janesville, Wis., assignor to Kohler Co., Kohler, Wis., a corporation of Wisconsin
Filed Feb. 20, 1968, Ser. No. 10,647
Term of patent 14 years
(Cl. D23—55)

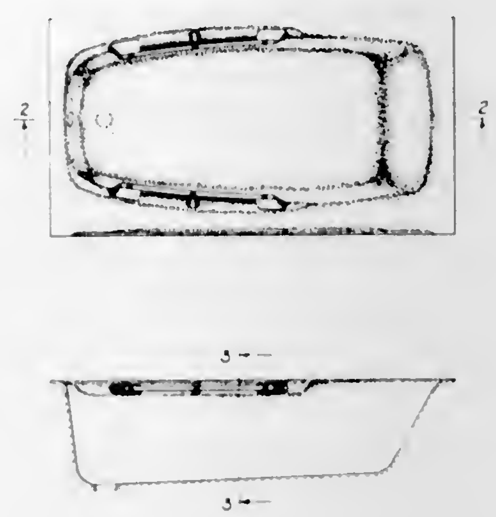

211,878
ELECTRIC FIREPLACE
Donald E. Winegardner, R.R. 8, Huntington, Ind. 46750
Filed Aug. 7, 1967, Ser. No. 8,154
Term of patent 14 years
(Cl. D23—94)

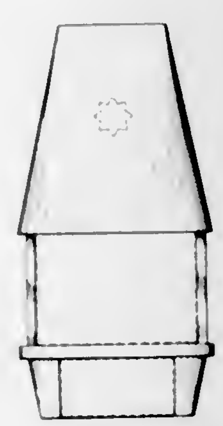

211,879
ELECTRIC FIREPLACE
Donald E. Winegardner, R.R. 8, Huntington, Ind. 46750
Filed Aug. 7, 1967, Ser. No. 8,158
Term of patent 14 years
(Cl. D23—94)

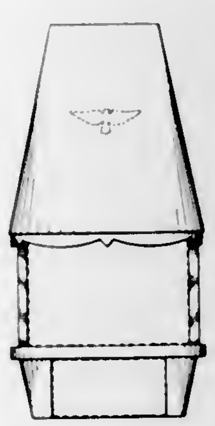

211,880
DENTAL FLOSS HOLDER
Guido R. Di Giuseppe, 2519 S. Sartain St., Philadelphia, Pa. 19148
Filed Jan. 2, 1968, Ser. No. 10,002
Term of patent 14 years
(Cl. D24—1)

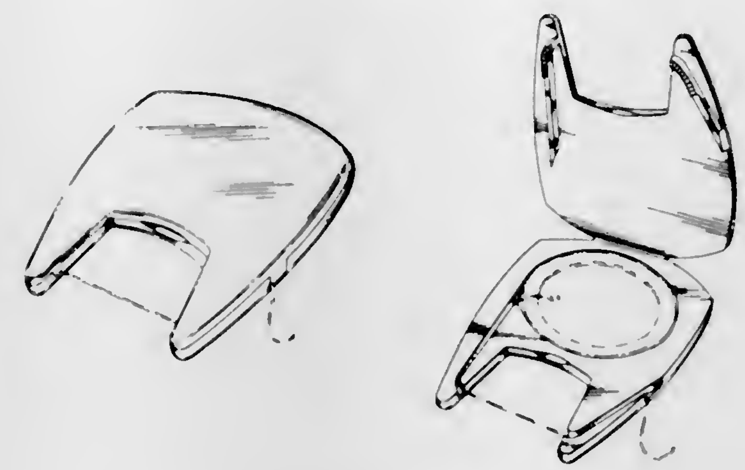

211,881
ELECTRIC FENCE WIRE INSULATOR
Elvie Bauer, 9100 Long Lane, Cincinnati, Ohio 45231
Filed Feb. 10, 1967, Ser. No. 5,768
Term of patent 14 years
(Cl. D26—10)

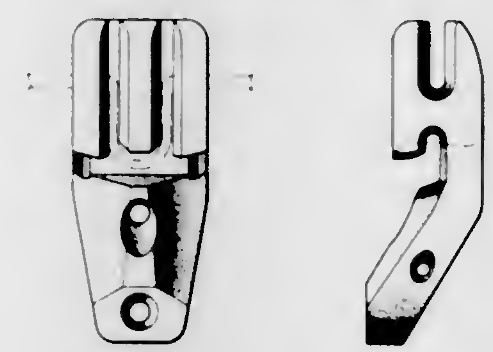

211,882
TELEVISION ANTENNA ROD
Marvin P. Middlemark, 96 Store Hill Road, Old Westbury, N.Y. 11568
Filed Feb. 15, 1968, Ser. No. 10,589
Term of patent 14 years
(Cl. D26—14)

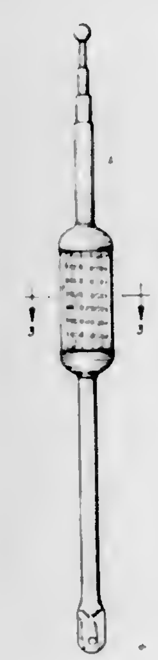

211,883
VASE
Charles H. McCrea, Belmont, Calif., assignor to Plastic Productions Company, Redwood City, Calif., a corporation of California
Filed Sept. 27, 1967, Ser. No. 8,751
Term of patent 14 years
(Cl. D29—28)

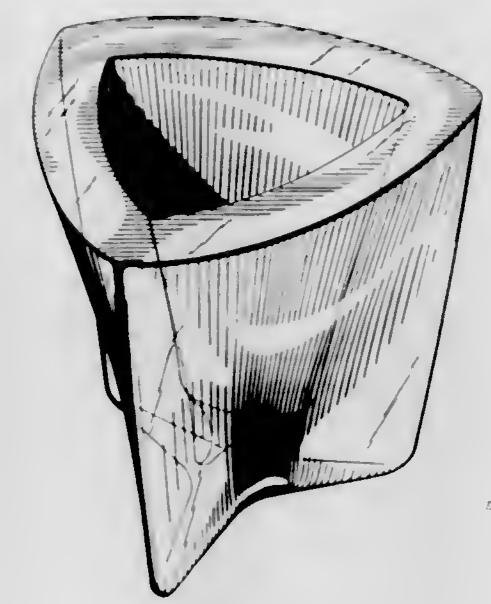

211,884
CAGE FOR DOMESTIC ANIMALS
Gerald Dennis Hutchings, Peterborough, England, assignor to R. H. Pollard (Flora & Sundries) Limited, Peterborough, England, a British company
Filed Sept. 18, 1967, Ser. No. 8,612
Term of patent 3½ years
(Cl. D30—1)

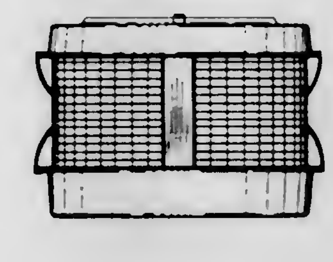

211,885
COMBINED VACUUM TABLE AND FLASH EXPOSURE PANEL FOR USE WITH A DIRECT SCREEN SYSTEM
Marvin Korman, Rego Park, N.Y., assignor to Berkey Photo, Incorporated, New York, N.Y.
Filed Mar. 13, 1967, Ser. No. 6,175
Term of patent 14 years
(Cl. D33—14)

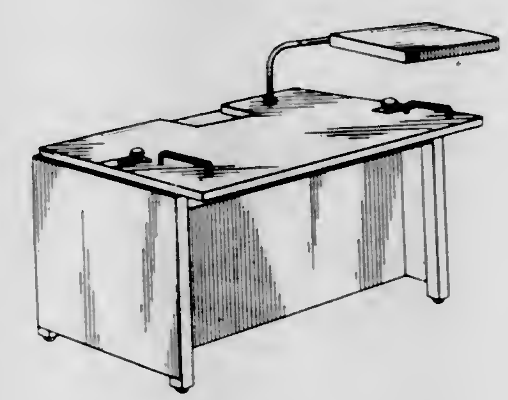

211,886
COMBINED SEATING AND TABLE UNIT
E Burton Benjamin, Highland Park, Ill., assignor to Sico Incorporated, Minneapolis, Minn., a corporation of Minnesota
Filed May 29, 1967, Ser. No. 7,298
Term of patent 14 years
(Cl. D33—14)

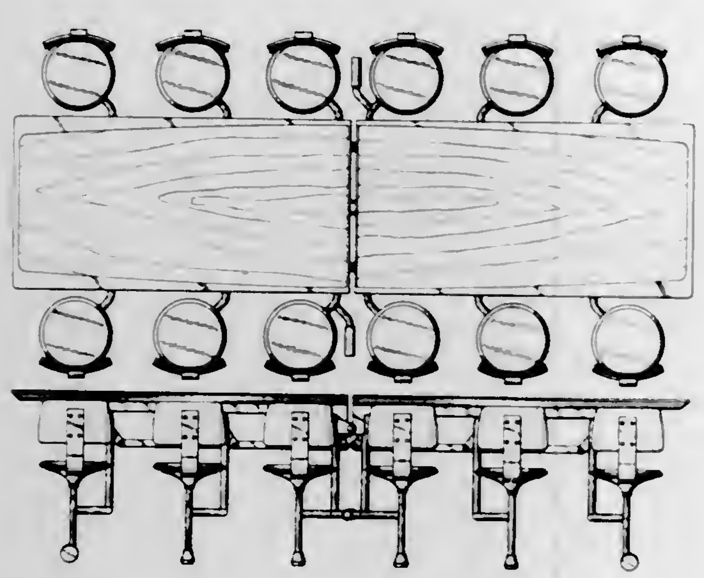

211,887
TRAY FOR SOAP OR SIMILAR ARTICLE
Harry S. Dearling, 25 E. 83rd St., New York, N.Y. 10028
Filed Dec. 11, 1967, Ser. No. 9,729
Term of patent 14 years
(Cl. D33—24)

211,888
SOAP HOLDER
John C. Hall and Gunter E. Milow, Los Angeles, Calif., assignors to Productline Incorporated, a corporation of California
Filed Sept. 21, 1967, Ser. No. 8,677
Term of patent 14 years
(Cl. D33—24)

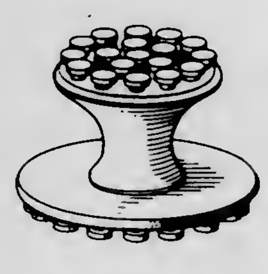

211,889
TOY FIGURE
Josephine Lazzarini Battiala, 2531 Woodhull Ave., Bronx, N.Y. 10469
Filed Nov. 13, 1967, Ser. No. 9,358
Term of patent 3½ years
(Cl. D34—4)

211,890
HANGER UNIT FOR FLOWERS OR THE LIKE
Max D. Dixon, 125 N. Main, Miami, Okla. 74354
Filed Mar. 31, 1967, Ser. No. 6,461
Term of patent 14 years
(Cl. D35—3)

211,891
GOBLET OR THE LIKE
James L. Wentzel, Cottage Grove, Minn., assignor to Plastics, Inc., St. Paul, Minn., a corporation of Minnesota
Filed Oct. 18, 1967, Ser. No. 9,058
Term of patent 14 years
(Cl. D36—8)

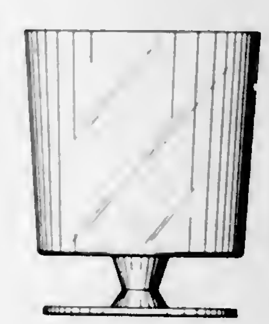

211,892
FOAM DISPENSING UNIT FOR A FLOOR TREATING MACHINE
Frederick G. Cooper, North Muskegon, Mich., assignor to Clarke Floor Machine Division, Studebaker Corporation, Muskegon, Mich., a corporation of Michigan
Filed May 16, 1967, Ser. No. 7,149
Term of patent 14 years
(Cl. D37—3)

211,893
LIQUID DISPENSER FOR A FLOOR AND CARPET TREATING MACHINE
Carroll M. Gantz, North Canton, Ohio, assignor to The Hoover Company, North Canton, Ohio, a corporation of Delaware
Filed Nov. 15, 1966, Ser. No. 4,670
Term of patent 14 years
(Cl. D37—4)

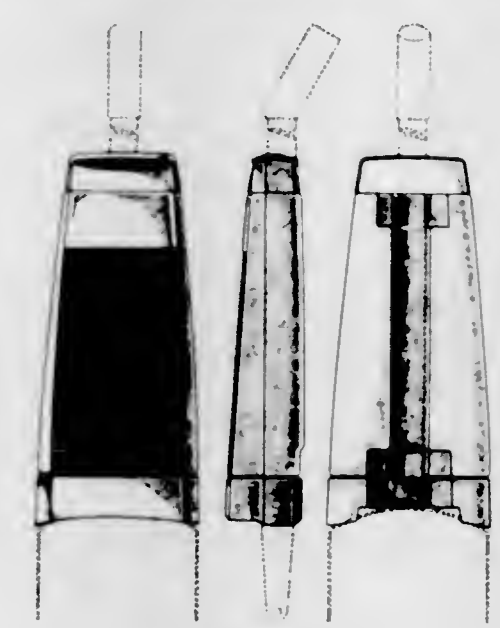

211,894
COMBINED CLOCK, PICTURE FRAME AND SUPPORT FOR A PORTABLE RADIO OR THE LIKE
Zoltan B. Tokar, 419 E. 93rd St., New York, N.Y. 10028
Filed July 17, 1967, Ser. No. 7,830
Term of patent 3½ years
(Cl. D42—7)

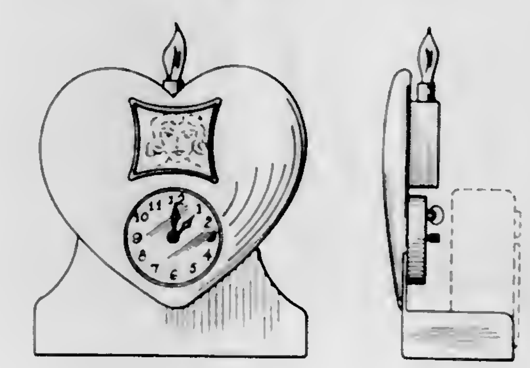

211,895
CLOCK CASING
Giacinto C. D'Ercoli, Park Forest, and Roger L. Kelly, Arlington Heights, Ill., assignors to General Time Corporation, Stamford, Conn., a corporation of Delaware
Filed July 18, 1967, Ser. No. 7,856
Term of patent 14 years
(Cl. D42—7)

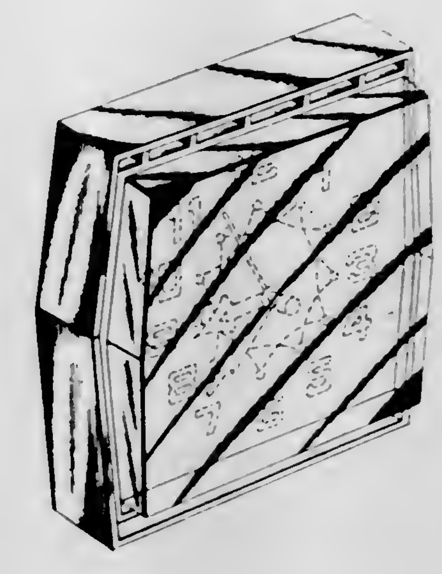

211,896
CASE FOR A CLOCK OR SIMILAR ARTICLE
Rhys D. Miller, Walnut Creek, Calif., assignor to Chan Miller Smith, Oakland, Calif., a partnership of California
Filed Oct. 18, 1967, Ser. No. 9,054
Term of patent 7 years
(Cl. D42—7)

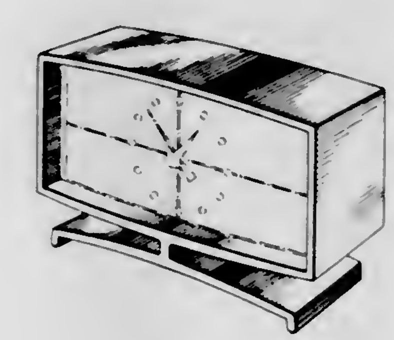

211,897
COMBINED WRISTWATCH AND LOCKET
Zoltan B. Tokar, 419 E. 93rd St., New York, N.Y. 10028
Filed July 17, 1967, Ser. No. 7,831
Term of patent 3½ years
(Cl. D42—8)

211,898
COLANDER OR SIMILAR ARTICLE
Sadie Buck, 414 E. Bridgeport,
Spokane, Wash. 99207
Filed June 1, 1967, Ser. No. 7,332
Term of patent 7 years
(Cl. D44—29)

211,899
COMBINED DISPLAY AND STORAGE TRAY
FOR CUTLERY OR THE LIKE
Louis Kriegel, Flushing, N.Y., assignor to Joy Plastics, Inc., New York, N.Y., a corporation of New York
Filed Sept. 8, 1967, Ser. No. 8,525
Term of patent 14 years
(Cl. D44—29)

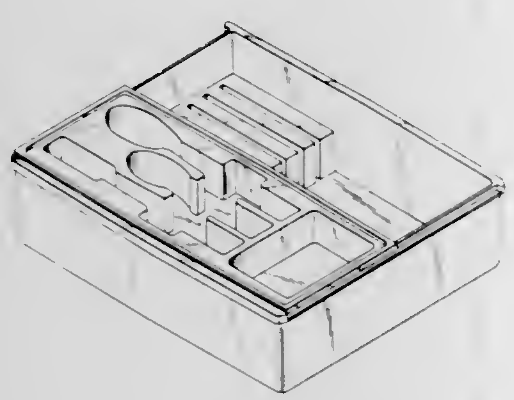

211,900
CIGARETTE LIGHTER
Takeshi Mizutani, Tokyo, Japan, assignor to
Kanamaru Shoten, Ltd., Tokyo, Japan
Filed July 5, 1967, Ser. No. 7,715
Term of patent 14 years
(Cl. D48—27)

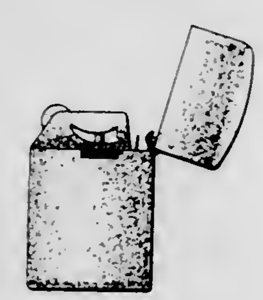

211,901
HIGH-PRESSURE SPRAY WASHING UNIT
Anthony F. Pingatore, 712 E. 39th St.,
Hibbing, Minn. 55746
Filed July 26, 1967, Ser. No. 8,007
Term of patent 14 years
(Cl. D49—1)

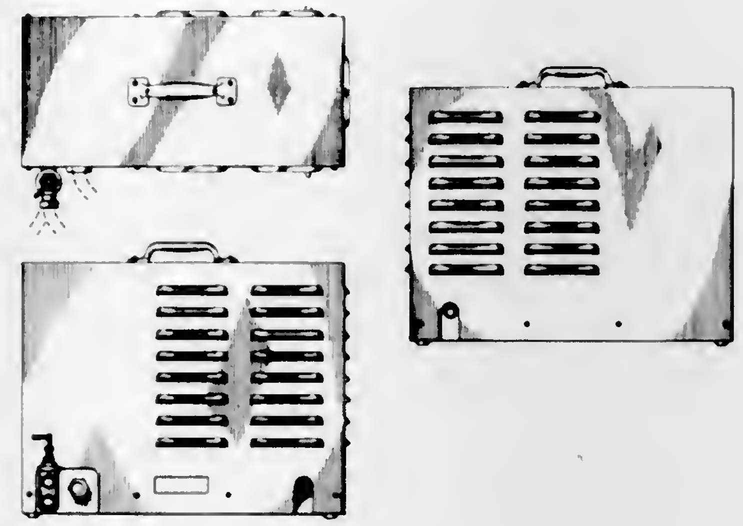

211,902
MACHINE FOR CLEANING DENTURES
OR THE LIKE
Paul P. Krolik, 55 E. Washington St., and Theodore H. Perlman, 25 E. Washington St., both of Chicago, Ill. 60602
Filed Aug. 21, 1967, Ser. No. 8,340
Term of patent 14 years
(Cl. D49—1)

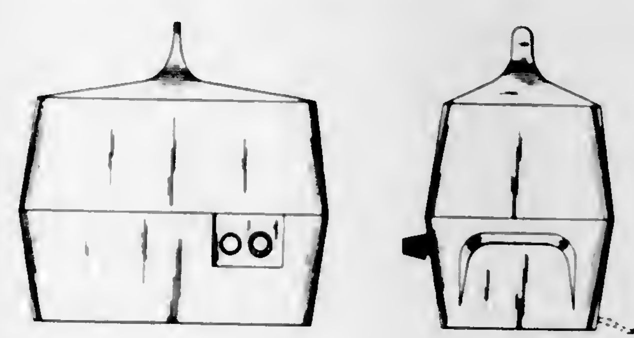

211,903
WASTEBASKET
Edward E. Heck, Berwyn, Ill., assignor to Republic Molding Corporation, Niles, Ill., a corporation of Illinois
Filed Oct. 19, 1966, Ser. No. 4,339
Term of patent 14 years
(Cl. D49—30)

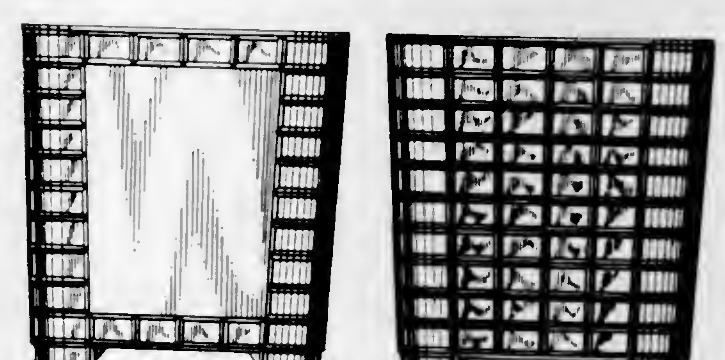

211,904
WHEEL MOUNTING LUG
Leon A. Theissen, St. Peter, and Bernard E. Hogan, Jr., North Mankato, Minn., assignors to Miller Motors, Inc., Mankato, Minn., a corporation of Minnesota
Filed Sept. 28, 1967, Ser. No. 8,775
Term of patent 14 years
(Cl. D54—1)

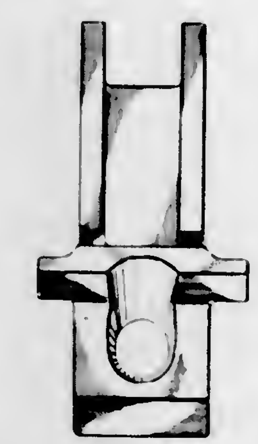

211,905
SUPPORT STAND FIXTURE
Walter R. Goodridge, Greenville, R.I., assignor to Mr. Christmas, Inc., New York, N.Y., a corporation of New York
Filed Nov. 22, 1967, Ser. No. 9,498
Term of patent 14 years
(Cl. D54—1)

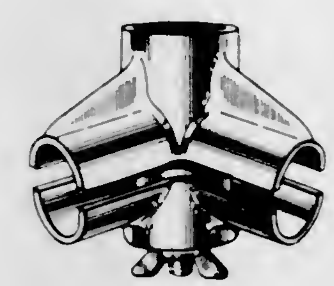

211,906
HOT TOP CASING
Geoffrey Fenton, Lakewood, Ohio, assignor to Foseco International Limited, Nechells, England, a British company
Continuation of design applications Ser. No. 4,974, Dec. 8, 1966, and Ser. No. 5,465, Jan. 18, 1967. This application Oct. 18, 1967, Ser. No. 9,151
Term of patent 14 years
(Cl. D54—8)

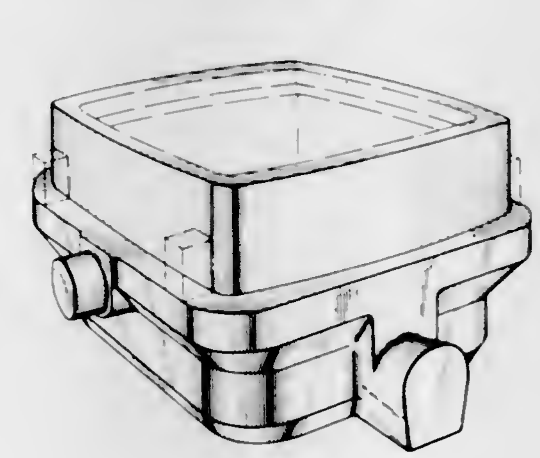

211,907
GUITAR
Abbott Buegeleisen, Larchmont, N.Y., assignor to Buegeleisen & Jacobson, Inc., New York, N.Y., a corporation of New York
Filed Jan. 19, 1968, Ser. No. 10,217
Term of patent 14 years
(Cl. D56—1)

211,908
ORGAN DRAWKNOB
William H. Reisner, Jr., Hagertown, Md., assignor to The W. H. Reisner Mfg. Company, Inc., Hagerstown, Md., a corporation of Maryland
Filed Aug. 16, 1966, Ser. No. 3,481
Term of patent 14 years
(Cl. D56—2)

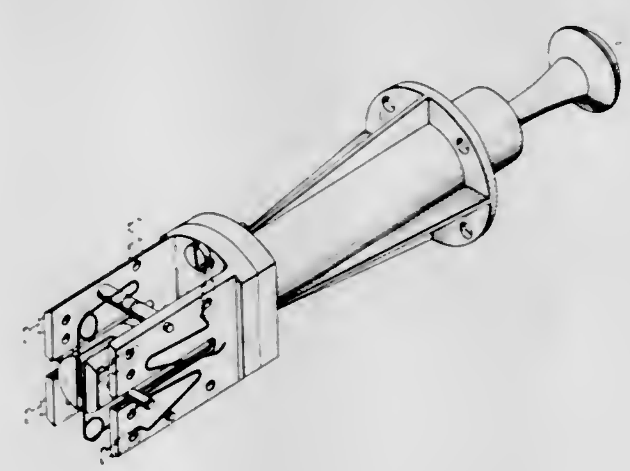

211,909
PAIR OF SUNGLASSES
Anthony Shindler, Brookline, Mass., assignor to American Optical Corporation, Southbridge, Mass., a corporation of Delaware
Filed Sept. 8, 1967, Ser. No. 8,526
Term of patent 14 years
(Cl. D57—1)

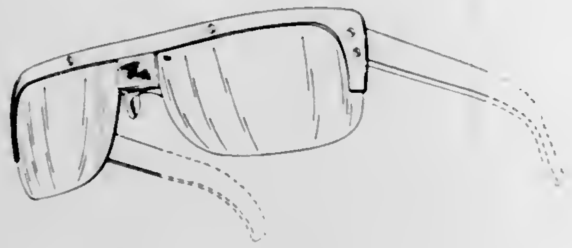

211,910
ILLUMINABLE DISPLAY APPARATUS FOR TRANSPARENCIES OR SIMILAR ARTICLE
Jerome J. Lieberman and Leon D. Lieberman, both of 5768 W. Adams Blvd., Los Angeles, Calif. 90016
Filed Oct. 21, 1966, Ser. No. 4,364
Term of patent 14 years
(Cl. D61—1)

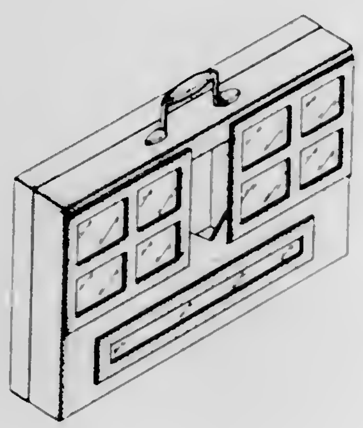

211,911
ADAPTER FOR FEEDING PARALLEL STACKED TRANSPARENCIES TO A SLIDE PROJECTOR OR SIMILAR ARTICLE
David E. Hansen, Rochester, N.Y., assignor to Eastman Kodak Company, Rochester, N.Y., a corporation of New Jersey
Filed Jan. 23, 1967, Ser. No. 5,511
Term of patent 14 years
(Cl. D61—1)

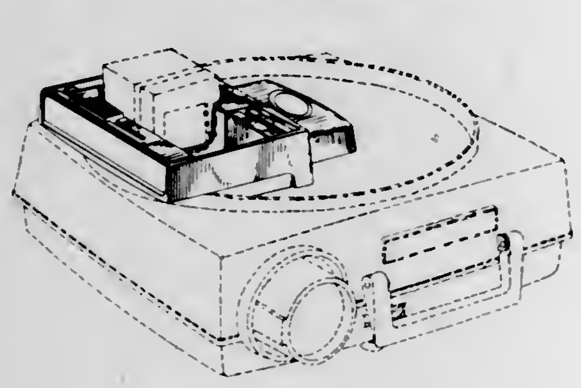

211,912
FILM PROCESSOR
Alfonso W. Merino, Hightstown, N.J., assignor to International Business Machines Corporation, Armonk, N.Y., a corporation of New York
Filed Sept. 18, 1967, Ser. No. 8,644
Term of patent 14 years
(Cl. D61—1)

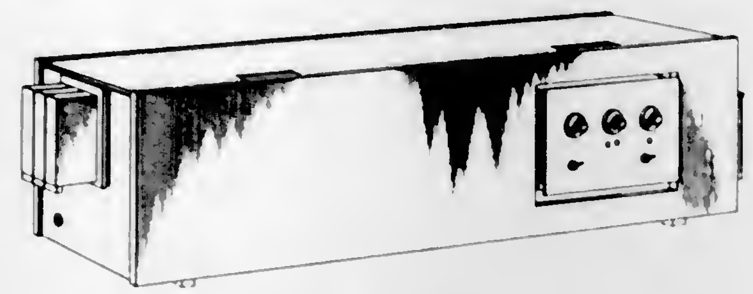

211,913
AQUARIUM AIR PUMP
Monte L. Levin, New York, N.Y., assignor to Aquariums Incorporated, Maywood, N.J., a corporation of Delaware
Filed Mar. 8, 1967, Ser. No. 6,122
Term of patent 14 years
(Cl. D65—1)

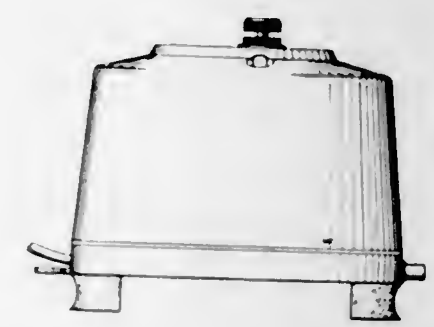

211,914
AQUARIUM PUMP MOTOR HOUSING
Mervin F. Roberts, Basking Ridge, N.J., assignor to T.F.H. Publications, Inc., Jersey City, N.J., a corporation of New York
Filed Mar. 31, 1967, Ser. No. 6,476
Term of patent 14 years
(Cl. D65—1)

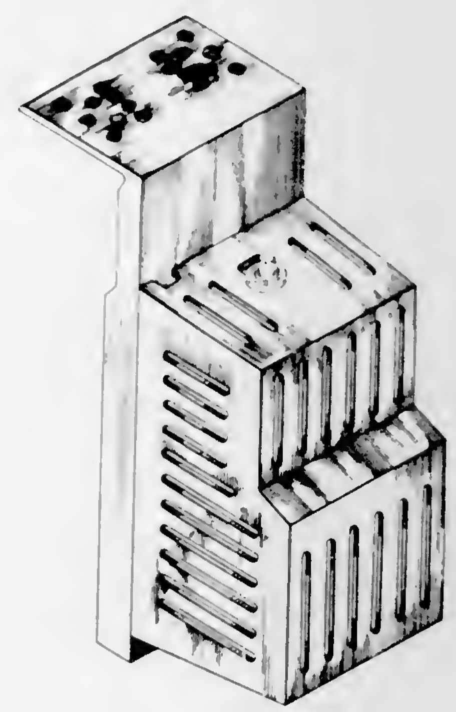

211,915
REENTRY VEHICLE OR SIMILAR ARTICLE
Frederick Raymes, Los Angeles, and Rashid M. Rashidian, Pomona, Calif., assignors to North American Rockwell Corporation, a corporation of Delaware
Filed Sept. 22, 1966, Ser. No. 3,954
Term of patent 14 years
(Cl. D71—1)

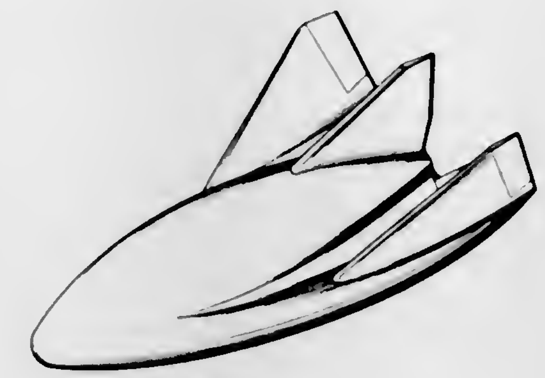

211,916
BURGLAR ALARM
Floyd M. Edwards, 2209 Otis Drive, Alameda, Calif. 94501
Filed Mar. 10, 1967, Ser. No. 6,172
Term of patent 3½ years
(Cl. D72—1)

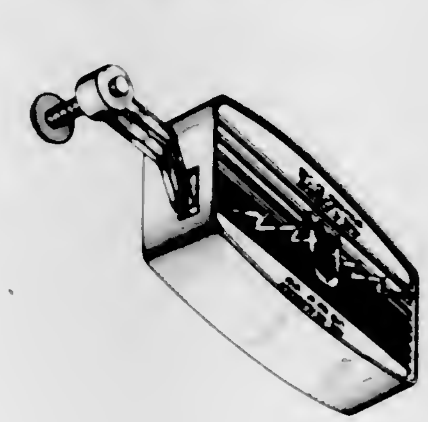

211,917
DESK TRAY OR SIMILAR ARTICLE
Florence R. Copeland, 2112 Spring House Road, Broomall, Pa. 19008, and Gloria M. De Luca, 812 Oakwood Drive, Glenolden, Pa. 19036
Filed June 1, 1967, Ser. No. 7,334
Term of patent 14 years
(Cl. D74—9)

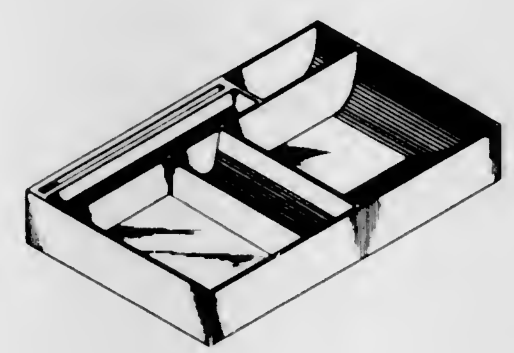

211,918
COMBINED DISPLAY AND DISPENSING RACK FOR CANS OR THE LIKE
Donald M. Wilder and Mickey V. Walker, both of Brenham, Tex. 77833
Filed Nov. 24, 1967, Ser. No. 9,520
Term of patent 14 years
(Cl. D80—10)

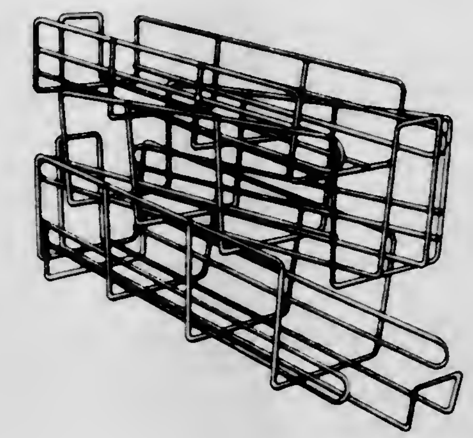

211,919
BARBECUE GRILL
Gunter Harff, 110—05 68th Ave., Forest Hills, N.Y. 11375, and Leonard A. Grossman, 28 Lafayette Drive, Woodmere, N.Y. 11598
Filed Nov. 22, 1967, Ser. No. 9,500
Term of patent 14 years
(Cl. D81—10)

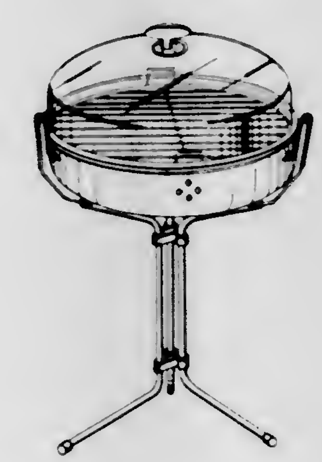

211,920
MEDICAL LIQUID BAG
Byron H. Wickett, North Hollywood, Calif., assignor to American Hospital Supply Corporation, Evanston, Ill., a corporation of Illinois
Filed Nov. 24, 1967, Ser. No. 9,532
Term of patent 14 years
(Cl. D83—1)

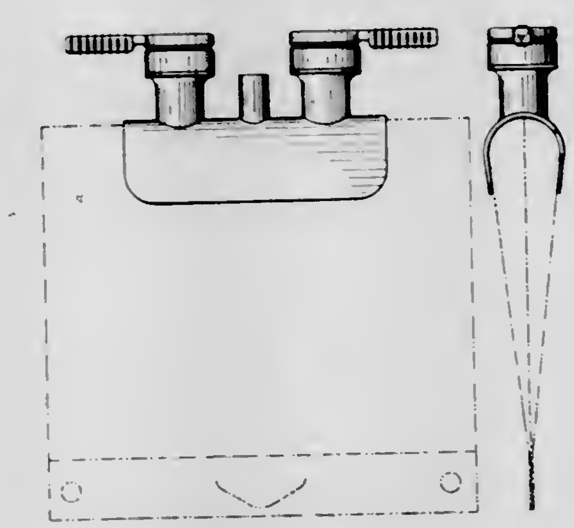

211,921
COMBINED ASHTRAY AND CIGARETTE SNUFFER
John B. Bourgeois, 142 Beacon St., Worcester, Mass. 01610
Filed Aug. 3, 1967, Ser. No. 8,103
Term of patent 14 years
(Cl. D85—2)

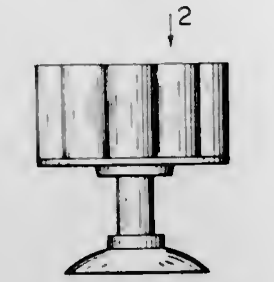

211,922
SAFETY BAR FOR CYCLES
Robert C. Persons, 72 Commercial St., Worcester, Mass. 01608
Filed Feb. 19, 1968, Ser. No. 10,637
Term of patent 14 years
(Cl. D90—1)

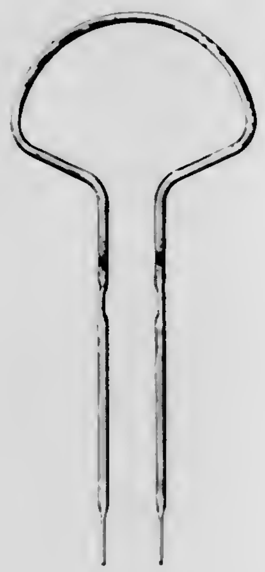

211,923
TIRE
Eric Clifford Bartlett, Erdington, Birmingham, England, assignor to Dunlop Tire & Rubber Corporation, Buffalo, N.Y.
Filed July 14, 1967, Ser. No. 7,796
Claims priority, application Great Britain Feb. 17, 1967
Term of patent 14 years
(Cl. D90—20)

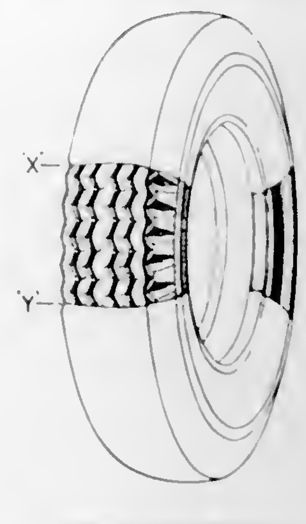

211,924
BOOKMARK
Austin H. Margeson, 76 Brookwood Road, Rochester, N.Y. 14610
Filed July 26, 1967, Ser. No. 8,002
Term of patent 14 years
(Cl. D97—1)

LIST OF REISSUE PATENTEES

TO WHOM

PATENTS WERE ISSUED ON THE 6TH DAY OF AUGUST, 1968

NOTE.— Arranged in accordance with the first significant character or word of the name (in accordance with city and telephone directory practice).

American Standard Inc.: *See*—
Cox, Frank T., Jr., Sherretts, and Mathews. Re. 26,432.
Associated Electrical Industries Ltd.: *See*—
Willdig, Edward. Re. 26,437.
Beeler, Charles F. Air conditioning system. Re. 26,430, 7-6-68, Cl. 165—16.
Bowles, Romald E. Fluid control systems for foils. Re. 26,434, 8-6-68, Cl. 114—66.5.
Cox, Frank T., Jr., H. A. Sherretts, and G. P. Mathews, to American Standard Inc. Emergency brake actuator. Re. 26,432, 8-6-68, Cl. 92—63.
Gubitose, Nicholas F., and J. J. Monahan, to Western Electric Co., Inc. Apparatus for assembling switches. Re. 26,435, 8-6-68, Cl. 65—154.
Haynes, Munro K., to International Business Machines Corp. Cryogenic memory system with internal information exchange. Re. 26,436, 8-6-68, Cl. 340—173.1.
International Business Machines Corp.: *See*—
Haynes, Munro K. Re. 26,436.
Kaufman, Samuel, and Magnino. Re. 26,429.
Kaufman, Samuel, and J. J. Magnino, Jr., to International Business Machines Corp. Information retrieval system and method. Re. 26,429, 8-6-68, Cl. 340—172.5.
Kreuter, Kenneth G., to Robertshaw Controls Co. Electro-pneumatic process controller. Re. 26,431, 8-6-68, Cl. 91—374.
Le Suer, William M., to The Lubrizol Corp. Amide and imide derivatives of metal salts of substituted succinic acids. Re. 26,433. 8-6-68, Cl. 252—33.6.
Lubrizol Corp., The: *See*—
Le Suer, William M. Re. 26,433.
Magnino, Joseph J., Jr.: *See*—
Kaufman, Samuel, and Magnino. Re. 26,429.
Mathews, George P.: *See*—
Cox, Frank T., Jr., Sherretts, and Mathews. Re. 26,432.
Monahan, Jack J.: *See*—
Gubitose, Nicholas F., and Monahan. Re. 26,435.
Robertshaw Controls Co.: *See*—
Kreuter, Kenneth G. Re. 26,431.
Sherretts, Howard A.: *See*—
Cox, Frank T., Jr., Sherretts, and Mathews. Re. 26,432.
Western Electric Co., Inc.: *See*—
Gubitose, Nicholas F., and Monahan. Re. 26,435.
Willdig, Edward, to Associated Electrical Industries, Ltd. Mass spectrometer assemblies. Re. 26,437, 8-6-68, Cl. 250—41.9.

LIST OF PLANT PATENTEES

Cazzaniga, Febo G., to Fratelli Scarpellini S.p.A. Rose plant. 2,827, 8-6-68, Cl. 20.
Fratelli Scarpellini S.p.A.: *See*—
Cazzaniga, Febo G. 2,827.
Zaiger, Chris F. Nectarine tree. 2,825, 8-6-68, Cl. 41.
Zaiger, Chris F. Apricot tree. 2,826, 8-6-68, Cl. 39.

LIST OF DESIGN PATENTEES

Aigner, Etienne. Shoe ornament. 211,847, 8-6-68, Cl. D2—315.
American Hospital Supply Corp.: *See*—
Wickett, Byron H. 211,920.
American Optical Corp.: *See*—
Shindler, Anthony. 211,909.
Andersen, Donald L., to General Mills, Inc. Puffed snack food product. 211,844, 8-6-68, Cl. D1—3.
Aquariums Inc.: *See*—
Levin, Monte L. 211,913.
Bailey, Edgar F., to Hartz Mountain Products Corp. Mineral block for a birdcage. 211,845, 8-6-68, Cl. D1—27.
Ballard, Dale H., to Deseret Pharmaceutical Co., Inc. Combined brush and sponge. 211,851, 8-6-68, Cl. D4—17.
Bartlett, Eric C., to Dunlop Tire & Rubber Corp. Tire. 211,923, 8-6-68, Cl. D90—20.
Battiala, Josephine L. Toy figure. 211,889, 8-6-68, Cl. D34—4.
Bauer, Elvie. Electric fence wire insulator. 211,881, 8-6-68, Cl. D26—10.
Benjamin, E. Burton, to Sico Inc. Combined seating and table unit. 211,886, 8-6-68, Cl. D33—14.
Berkey Photo, Inc.: *See*—
Korman, Marvin. 211,885.
Bourgeois, John B. Combined ashtray and cigarette snuffer. 211,921, 8-6-68, Cl. D85—2.
Buck, Sadie. Colander or similar article. 211,898, 8-6-68, Cl. D44—29.
Buegeleisen, Abbott, to Buegeleisen & Jacobson, Inc. Guitar. 211,907, 8-6-68, Cl. D56—1.
Buegeleisen & Jacobson, Inc.: *See*—
Buegeleisen, Abbott. 211,907.
Campbell, Edward N., and B. E. Long. Fishing lure. 211,871, 8-6-68, Cl. D22—28.
Chan Miller Smith: *See*—
Miller, Rhys D. 211,896.
Clarke Floor Machine Division, Studebaker Corp.: *See*—
Cooper, Frederick G. 211,892.
Colgate-Palmolive Co.: *See*—
Roberts, Clifford H. 211,853.
Cooper, Frederick G., to Clarke Floor Machine Division, Studebaker Corp. Foam dispensing unit for a floor treating machine. 211,892, 8-6-68, Cl. D37—3.
Copeland, Florence R., and G. M. De Luca. Desk tray or similar article. 211,917, 8-6-68, Cl. D74—9.
Cothran, Otis J. Electrolytic device for removing metals from spent photographic solutions. 211,870, 8-6-68, Cl. D16—2.
Deadrick, James R., to Stewart-Warner Corp. Pull. 211,860, 8-6-68, Cl. D10—8.
Dearling, Harry S. Tray for soap or similar article. 211,887, 8-6-68, Cl. D33—24.
De Luca, Gloria M.: *See*—
Copeland, Florence R., and De Luca. 211,917.
D'Ercoli, Giacinto C., and R. L. Kelly, to General Time Corp. Clock casing. 211,895, 8-6-68, Cl. D42—7.
Deseret Pharmaceutical Co., Inc.: *See*—
Ballard, Dale H. 211,851.
Di Giuseppe, Guido R. Dental floss holder. 211,880, 8-6-68, Cl. D24—1.
Dixon, Max D. Hanger unit for flowers or the like. 211,890, 8-6-68, Cl. D35—3.
Doman, Donald W., to Kohler Co. Combined bath tub and grab rails. 211,876, 8-6-68, Cl. D23—55.
Doman, Donald W., to Kohler Co. Combined bath tub and grab rails. 211,877, 8-6-68, Cl. D23—55.
Doner, Howard P. Frame for a couch. 211,869, 8-6-68, Cl. D15—11.
Dunlop Tire & Rubber Corp.: *See*—
Bartlett, Eric C. 211,923.
Eastman Kodak Co.: *See*—
Hansen, David E. 211,911.
Edwards, Floyd M. Burglar alarm. 211,916, 8-6-68, Cl. D72—1.
Epstein, Herman. Slide fastener actuator. 211,849, 8-6-68, Cl. D2—415.
Fenton, Geoffrey, to Foseco International Ltd. Hot top casing. 211,906, 8-6-68, Cl. D54—8.
Foseco International Ltd.: *See*—
Fenton, Geoffrey. 211,906.
Gantz, Carroll M., to The Hoover Co. Liquid dispenser for a floor and carpet treating machine. 211,893, 8-6-68, Cl. D37—4.
General Aluminum Products, Inc.: *See*—
Trumely, Richard L. 211,867.
General Electric Co.: *See*—
Shalvoy, John C. 211,850.
General Mills, Inc.: *See*—
Andersen, Donald L. 211,844.
General Time Corp.: *See*—
D'Ercoli, Giacinto C., and Kelly. 211,895.
Gilman, Robert H.: *See*—
Tate, Eugene A., and Gilman. 211,866.
Glines, Carl R., to Sarong, Inc. Girdle. 211,846, 8-6-68, Cl. D2—2.
Goodridge, Walter R., to Mr. Christmas, Inc. Support stand fixture. 211,905, 8-6-68, Cl. D54—1.
Greene, Anthony E.: *See*—
Pemberton, Paul E., Loose, and Greene. 211,863.
Grossman, Leonard A.: *See*—
Harff, Gunter, and Grossman. 211,919.
Hall, John C., and G. E. Milow, to Productline Inc. Soap holder. 211,888, 8-6-68, Cl. D33—24.

Hansen, David E., to Eastman Kodak Co. Adapter for feeding parallel stacked transparencies to a slide projector or similar article. 211,911, 8-6-68, Cl. D61—1.
Harff, Gunter, and L. A. Grossman. Barbecue grill. 211,919, 8-6-68, Cl. D81—10.
Hartz Mountain Products Corp.: *See*—
  Bailey, Edgar F. 211,845.
Heck, Edward E., to Republic Molding Corp. Wastebasket. 211,903, 8-6-68, Cl. D49—30.
Hercules Gallon Products, Inc.: *See*—
  Tate, Eugene A., and Gilman. 211,866.
Hogan, Bernard E., Jr.: *See*—
  Theissen, Leon A., and Hogan. 211,904.
Hoover Co., The: *See*—
  Gantz, Carroll M. 211,893.
Hutchings, Gerald D., to R. H. Pollard (Flora & Sundries) Ltd. Cage for domestic animals. 211,884, 8-6-68, Cl. D30—1.
Inland Steel Co.: *See*—
  Ullman, Frederick E. 211,855.
  Ullman, Frederick E. 211,856.
International Business Machines Corp.: *See*—
  Merino, Alfonso W. 211,912.
Joy Plastics, Inc.: *See*—
  Kriegel, Louis. 211,899.
Kanamaru Shoten, Ltd.: *See*—
  Mizutani, Takeshi. 211,900.
Kelly, Roger L.: *See*—
  D'Ercoli, Giacinto C., and Kelly. 211,895.
Khazzam, Joseph N. Baseball glove, or similar article. 211,-848, 8-6-68, Cl. D2—361.
Kohler Co.: *See*—
  Doman, Donald W. 211,876.
  Doman, Donald W. 211,877.
Korman, Marvin, to Berkey Photo, Inc. Combined vacuum table and flash exposure panel for use with a direct screen system. 211,885, 8-6-68, Cl. D33—14.
Kriegel, Louis, to Joy Plastics, Inc. Combined display and storage tray for cutlery or the like. 211,899, 8-6-68, Cl. D44—29.
Krolik, Paul P., and T. H. Perlman. Machine for cleaning dentures or the like. 211,902, 8-6-68, Cl. D49—1.
La Rocca, Anthony A. and S. L. Combined desk locker and bunk bed unit. 211,852, 8-6-68, Cl. D5—4.
La Rocca, Shirley L.: *See*—
  La Rocca, Anthony A. and S. L. 221,852.
Levin, Monte L., to Aquariums Inc. Aquarium air pump. 211,913, 8-6-68, Cl. D65—1.
Lieberman, Jerome J. and L. D. Illuminable display apparatus for transparencies or similar article. 211,910, 8-6-68, Cl. D61—1.
Lieberman, Leon D.: *See*—
  Lieberman, Jerome J. and L. D. 211,910.
Long, Bruce E.: *See*—
  Campbell, Edward N., and Long. 211,871.
Loose, Sheldon D.: *See*—
  Pemberton, Paul E., Loose, and Greene. 211,863.
Margeson, Austin H. Bookmark. 211,924, 8-6-68, Cl. D97—1.
McCrea, Charles H., to Plastic Productions Co. Vase. 211,883, 8-6-68, Cl. D29—28.
Merino, Alfonso W., to International Business Machines Corp. Film processor. 211,912, 8-6-68, Cl. D61—1.
Meyer, Carl R. Diving board. 211,864, 8-6-68, Cl. D13—1.
Middlemark, Marvin P. Television antenna rod. 211,882, 8-6-68, Cl. D26—14.
Miller Motors, Inc.: *See*—
  Theissen, Leon A., and Hogan. 211,904.
Miller, Rhys D., to Chan Miller Smith. Case for a clock or similar article. 211,896, 8-6-68, Cl. D42—7.
Milow, Gunter E.: *See*—
  Hall, John C., and Milow. 211,888.
Mr. Christmas, Inc.: *See*—
  Goodridge, Walter R. 211,905.
Mizutani, Takeshi, to Kanamaru Shoten, Ltd. Cigarette lighter. 211,900, 8-6-68, Cl. D48—27.
Mongerson, Paul A., to Standard Screw Co. Combined bathtub spout, hand grip, soap holder and control knob. 211,-873, 8-6-68, Cl. D23—32.
Mongerson, Paul A., to Standard Screw Co. Combined bathtub spout and soap holder. 211,874, 8-6-68, Cl. D23—32.
North American Rockwell Corp.: *See*—
  Raymes, Frederick, and Rashidian. 211,915.
Overhead Door Corp.: *See*—
  Pemberton, Paul E., Loose, and Greene. 211,863.
Pemberton, Paul E., S. D. Loose, and A. E. Greene, to Overhead Door Corp. Garage door. 211,863, 8-6-68, Cl. D13—1.
Perlman, Theodore H.: *See*—
  Krolik, Paul P., and Perlman. 211,902.
Persons, Robert C. Safety bar for cycles. 211,922, 8-6-68, Cl. D90—1.
Pingatore, Anthony F. High-pressure spray washing unit. 211,-901, 8-6-68, Cl. D49—1.
Plastic Productions Co.: *See*—
  McCrea, Charles H. 211,883.
Plastics, Inc.: *See*—
  Wentzel, James L. 211,891.
Pollard, R. H., (Flora & Sundries) Ltd.: *See*—
  Hutchings, Gerald D. 211,884.
Porter, William V. Vent cover for standpipes or the like. 211,875, 8-6-68, Cl. D23—41.
Productline Inc.: *See*—
  Hall, John C., and Milow. 211,888.
Rashidian, Rashid M.: *See*—
  Raymes, Frederick, and Rashidian. 211,915.
Raymes, Frederick, and R. M. Rashidian, to North American Rockwell Corp. Reentry vehicle or similar article. 211,915, 8-6-68, Cl. D71—1.
Reisner, W. H., Mfg. Co., Inc., The: *See*—
  Reisner, William H., Jr. 211,908.
Reisner, William H., Jr., to The W. H. Reisner Mfg. Co., Inc. Organ drawknob. 211,908, 8-6-68, Cl. D56—2.
Republic Molding Corp.: *See*—
  Heck, Edward E. 211,903.
Reynolds, Loyd L. Check valve. 211,872, 8-6-68, Cl. D23—22.
Roberts, Clifford H., to Colgate-Palmolive Co. Bottle or similar article. 211,853, 8-6-68, Cl. D9—33.
Roberts, Mervin F., to T.F.H. Publications, Inc. Aquarium pump motor housing. 211,914, 8-6-68, Cl. D65—1.
Robo-Wash, Inc.: *See*—
  Widner, James E. 211,865.
Sarong, Inc.: *See*—
  Glines, Carl R. 211,846.
Shalvoy, John C., to General Electric Co. Combined recharging stand and toothbrush holder. 211,850, 8-6-68, Cl. D4—16.
Shindler, Anthony, to American Optical Corp. Pair of sunglasses. 211,909, 8-6-68, Cl. D57—1.
Sico Inc.: *See*—
  Benjamin, E. Burton. 211,886.
Simpson, Frank F., to Wilkinson Sword Ltd. Razor blade dispenser. 211,857, 8-6-68, Cl. D9—187.
Sizer, William C. Bottle. 211,854, 8-6-68, Cl. D9—42.
Spencer, Herbert E. Stool. 211,868, 8-6-68, Cl. D15—8.
Sproul, Fred C. Housing tract. 211,861, 8-6-68, Cl. D13—1.
Standard Screw Co.: *See*—
  Mongerson, Paul A. 211,873.
  Mongerson, Paul A. 211,874.
Stanfield, Alvin M., Jr. Window shutter. 211,862, 8-6-68, Cl. D13—1.
Stewart-Warner Corp.: *See*—
  Deadrick, James R. 211,860.
T.F.H. Publications, Inc.: *See*—
  Roberts, Mervin F. 211,914.
Tate, Eugene A., and R. H. Gilman, to Hercules Gallon Products, Inc. Vehicle body. 211,866, 8-6-68, Cl. D14—3.
Theissen, Leon A., and B. E. Hogan, Jr., to Miller Motors, Inc. Wheel mounting lug. 211,904, 8-6-68, Cl. D54—1.
Theodore, H.: *See*—
  Krolik, Paul P., and Theodore. 211,902.
Tishuk, Michael A., to United States Mineral Products Co. Container for mushrooms and other produce. 211,859, 8-6-68, Cl. D9—224.
Tokar, Zoltan B. Combined clock, picture frame and support for a portable radio or the like. 211,894, 8-6-68, Cl. D42—7.
Tokar, Zoltan B. Combined wristwatch and locket. 211,897, 8-6-68, Cl. D42—8.
Trumely, Richard L., to General Aluminum Products, Inc. Sled. 211,867, 8-6-68, Cl. D14—24.
Ullman, Frederick E., to Inland Steel Co. Shipping container. 211,855, 8-6-68, Cl. D9—170.
Ullman, Frederick E., to Inland Steel Co. Shipping container. 211,856, 8-6-68, Cl. D9—170.
Uniroyal Inc.: *See*—
  Wadzita, Michael P. 211,858.
United States Mineral Products Co.: *See*—
  Tishuk, Michael A. 211,859.
Wadzita, Michael P., to Uniroyal Inc. Shipping container. 211,858, 8-6-68, Cl. D9—222.
Walker, Mickey V.: *See*—
  Wilder, Donald M., and Walker. 211,918.
Wentzel, James L., to Plastics, Inc. Goblet or the like. 211,-891, 8-6-68, Cl. D36—8.
Wickett, Byron H., to American Hospital Supply Corp. Medical liquid bag. 211,920, 8-6-68, Cl. D83—1.
Widner, James E., to Robo-Wash, Inc. Building. 211,865, 8-6-68, Cl. D13—1.
Wilder, Donald M., and M. V. Walker. Combined display and dispensing rack for cans or the like. 211,918, 8-6-68, Cl. D80—10.
Wilkinson Sword Ltd.: *See*—
  Simpson, Frank F. 211,857.
Winegardner, Donald E. Electric fireplace. 211,878, 8-6-68, Cl. D23—94.
Winegardner, Donald E. Electric fireplace. 211,879, 8-6-68, Cl. D23—94.

LIST OF PATENTEES

TO WHOM

PATENTS WERE ISSUED ON THE 6TH DAY OF AUGUST, 1968

NOTE.—Arranged in accordance with the first significant character or word of the name (in accordance with city and telephone directory practice).

AMP, Inc.: *See*—
  Adams, Leon M., and Schuetze. 3,396,116.
  Schuetze, Clarke E. 3,396,117.
Abbey, Charles R., H. H. Pursel, and D. L. Seidmore, to Honeywell Inc. Data channel monitor. 3,396,240, 8-6-68, Cl. 178—69.
Abrahamson, Edmund. Resistance measuring bridge circuit having automatic bridge balancing and range selecting means. 3,396,332, 8-6-68, Cl. 324—62.
Ackerman, Marvin, to Hewlett-Packard Co. Optoelectric data readout device. 3,395,963, 8-6-68, Cl. 250—219.
Ackermann, Karl, and K. Paape, to Robert Bosch Elektronik und Photokino G.m.b.H. Cartridge receiving means for a tape recorder. 3,395,871, 8-6-68, Cl. 242—55.13.
Acme Process Equipment Co.: *See*—
  Gartner, Henry C. 3,395,635.
Adams, Leon M., and C. E. Schuetze, to AMP, Inc. Encapsulation technique. 3,396,116, 8-6-68, Cl. 252—182.
Aderer, Julius, Inc.: *See*—
  Hospes, Richard. 3,395,958.
Advance Transformer Co.: *See*—
  Feinberg, Albert E. 3,396,342.
Aerojet-General Corp.: *See*—
  Cottrell, Richard F. 3,395,825.
Agfa Aktiengesellschaft: *See*—
  Hellmig, Ehrhard, and Moll. 3,396,024.
  Himmelmann, Wolfgang, Riebel, and Muller. 3,396,029.
Agfa-Gevaert Aktiengesellschaft: *See*—
  Deeg, Karl, and Hofmann. 3,395,473.
  Heinen, Hans. 3,395,842.
  Winkler, Alfred, Hofmann, and Deeg. 3,395,474.
Agnew, Norman F., to Fermco, Inc. Coded tone supervisory system. 3,396,370, 8-6-68, Cl. 340—163.
Aisin Seiki Kabushiki Kaisha: *See*—
  Sawada, Toshio. 3,395,593.
Aitken, Robert K., to Hazeltine Research, Inc. Multi-input mixer for null sensing devices. 3,396,381, 8-6-68, Cl. 340—347.
Aitkenhead, William C.: *See*—
  Grunig, James K., Aitkenhead, and Davis. 3,395,975.
Akerman, Iwan E. R., to Atlas Copco Aktiebolag. Method and means for obtaining dry gas or air. 3,395,511, 8-6-68, Cl. 55—23.
Aktiengesellschaft Brown, Boveri & Cie: *See*—
  Schubert, Helmuth, and Vitins. 3,396,253.
Alabama Metal Industries Corp.: *See*—
  Petrig, David. 3,395,506.
Alexander, Douglas S., H. Minnis, and B. H. Oliver, to Polymer Corp. Ltd. Dehydrogenation catalysts containing bismuth compounds and calcium nickel phosphate. 3,396,-205, 8-6-68, Cl. 260—680.
Allegheny Ludlum Steel Corp.: *See*—
  Woodcock, Ray E. 3,395,908.
Allen-Bradley Co.: *See*—
  De Smidt, Woodrow A. 3,396,255.
Allen Electric and Equipment Co.: *See*—
  Mazurkevics, Anatolijs, and Pilgrim. 3,395,574.
Allen, R. C., Business Machines, Inc.: *See*—
  Kuiper, James R., and Verduin. 3,395,576.
Allen, William M., and G. E. Manning, to Michigan Peat, Inc. Method and apparatus for harvesting peat moss. 3,395,467, 8-6-68, Cl. 37—195.
Allied Chemical Corp.: *See*—
  Gilbert, Everett E. 3,396,227.
  Greene, Phillip A. 3,396,196.
Allin, George S., Jr., to Northwest Engineering Corp. Safety system for machine maintenance workers. 3,395,783, 8-6-68, Cl. 192—83.
Allis-Chalmers Mfg. Co.: *See*—
  Comfort, Samuel T. 3,395,732.
  Manion, Jean P., Hipp, and Davies. 3,396,098.
Allison, Robert D., to United States Envelope Co. Multiple pocket envelope. 3,395,851, 8-6-68, Cl. 229—72.
Allmanna Svenska Elektriska Aktiebolaget: *See*—
  Eklund, Torsten. 3,395,909.
  Karlsson, Gosta, and Folgero. 3,396,228.
  Karlsson, Nils, Lundqvist, Nilsson, and Sivertsen. 3,396,324.
  Sundberg, Yngve. 3,396,229.
Alloy Engineering Co., The: *See*—
  Johnson, Carl G. A. 3,395,810.
Alloys Unlimited, Inc.: *See*—
  La Plante, Jerry C. 3,396,015.
Aluminum Co. of Canada: *See*—
  Sivilotti, Olivo G., and Briand. 3,396,094.
Alves Tile Co.: *See*—
  Moody, Robert J. 3,395,507.
Amberg, Edward J., Jr.: *See*—
  Sutterfield, Gerald T., and Amberg. 3,396,219.
American Air Filter Co., Inc.: *See*—
  Hauser, Herbert J., Jr. 3,395,552.
American Cyanamid Co.: *See*—
  Stark, Frank L., Jr. 3,396,223.
  Vitalis, Emil A., and Chamberlain. 3,396,153.
American Hospital Supply Corp.: *See*—
  Hamilton, Donald A. 3,395,705.
American Optical Co.: *See*—
  Crandon, Harry D. 3,396,214.
  Cuff, David W. 3,395,994.
American Photocopy Equipment Co.: *See*—
  Evans, Robert L., and Sparer. 3,395,610.
American Standard Inc.: *See*—
  Fowell, Andrew J. 3,395,752.
Ametek, Inc.: *See*—
  Schwegler, Roy F. 3,395,468.
Amity Leather Products Co.: *See*—
  Plaskan, Laurance F. 3,395,787.
Ampco Metal, Inc.: *See*—
  Marischen, John P. 3,395,649.
Anaconda Co., The: *See*—
  Grunig, James K., Aitkenhead, and Davis. 3,395,975.
Anderson, Clayton & Co.: *See*—
  Bell, Richard J., Campbell, Gibson, and Sims. 3,396,037.
Anderson, Eugene L.: *See*—
  Rastrelli, Leonard U., and Anderson. 3,395,564.
Anderson, George J., and J. Fantl, to Monsanto Co. Cellulosic substrates coated with styrene interpolymer latexes. 3,396,-049, 8-6-68, Cl. 117—94.
Anderson, Greenwood & Co.: *See*—
  Weise, Irvin B., and Butler. 3,395,727.
Anderson, Harry C., to General Electric Co. Stress graded cable termination. 3,396,231, 8-6-68, Cl. 174—73.
Anderson, James O., D. Rosenstock, and C. L. Vehrs, to North American Rockwell Corp. Terrain-following system. 3,396,-391, 8-6-68, Cl. 343—7.
Anderson, James W., S. Heny, and B. L. Joyner, ½ to Linden Laboratories Inc., and ½ to E. G. Cook. Transducer assembly for producing ultrasonic vibrations. 3,396,286, 8-6-68, Cl. 310—9.1.
Anderson, Russell K., and L. C. Sanford. Stethoscope with sound spectrum selection. 3,396,241, 8-6-68, Cl. 179—1.
Andreasen, Sigurd J., and O. A. Meyer. Rotary rake or scarifier. 3,395,465, 8-6-68, Cl. 37—2.
Andress, Harry J., Jr., and J. Capowski, to Mobil Oil Corp. Lubricants and liquid hydrocarbon fuels containing synergistic mixtures of substituted tetrahydropyrimidines and amine salts of succinamic acids. 3,396,106, 8-6-68, Cl. 252—33.6.
Andrews, Thomas D. H., to Dowty Technical Developments Ltd. Hydraulically balanced slipper bearing. 3,395,948, 8-6-68, Cl. 308—5.
Anglo Paper Products, Ltd.: *See*—
  Logan, Kenneth C., and Sepall. 3,396,069.
Antenna Research Associates, Inc.: *See*—
  Dunlavy, John H., Jr. 3,396,398.
Aoki, Akira: *See*—
  Nagashima, Jiro, and Aoki. 3,395,695.
Appleton Wire Works Corp.: *See*—
  Lee, Charles A., and Furbeck. 3,395,658.
Applied Research and Engineering Ltd.: *See*—
  Starmer, Roy. 3,396,086.
Argabright, Perry A.: *See*—
  Leary, Ralph J., Argabright, and Michael. 3,396,176.
Argus Chemical Corp.: *See*—
  Leistner, William E., and Hecker. 3,396,130.
  Perry, Norman L., and Pollock. 3,396,132.
Armstrong Cork Co.: *See*—
  Magnotta, Frank A., and Poshkus. 3,396,194.
Armstrong, Richard L.: *See*—
  Russell, Fred J., Armstrong, and Jennie. 3,395,558.
Arnold, Carroll H., to Wain-Roy Corp. Boom swing system. 3,395,812, 8-6-68, Cl. 212—66.
Asahi Kasei Kogyo Kabushiki Kaisha: *See*—
  Matsuda, Shogo, and Takagi. 3,395,969.
Ashland Oil & Refining Co.: *See*—
  Burrows, Raymond C. 3,396,112.
  McKillip, William J., and Impola. 3,396,210.
Atkinson, Edward R. Apparatus for photographic color reproduction. 3,395,611, 8-6-68, Cl. 88—24.
Atlas Chemical Industries, Inc.: *See*—
  Kasehagen, Leo. 3,396,199.
Atlas Copco Aktiebolag: *See*—
  Akerman, Iwan E. R. 3,395,511.
Atwood Vacuum Machine Co.: *See*—
  Baxter, Jerold D. 3,395,911.
Auchapt, Pierre, and G. Bouzou, to Commissariat a l'Energie Atomique. Apparatus for the continuous precipitation of plutonium in the form of oxalate. 3,395,988, 8-6-68, Cl. 23—260.
Auergesellschaft G.m.b.H.: *See*—
  Brauer, Lothar W. 3,396,122.
Auld, Samuel H., to Lear Jet Corp. Direct current motor speed control. 3,396,323, 8-6-68, Cl. 318—331.
Automatic Switch Co.: *See*—
  Johnson, Terence L. 3,395,863.

Avena, Samuel, and R. L. Leiner, to Curtiss-Wright Corp. Hydraulic control system for variable pitch propeller. 3,395,763, 8-6-68, Cl. 170—160.32.
Ayme de la Chevrellere, Charles. Radiation sensitive irrigation device. 3,396,277, 8-6-68, Cl. 250—215.
Azoplate Corp.: *See*—
Borchers, Henning H. 3,396,020.
Uhlig, Fritz. 3,396,019.
Babbitt, John H., Jr., to Caterpillar Tractor Co. Cooling means for vehicle electric drive components. 3,395,770, 8-6-68, Cl. 180—65.
Babcock Wilcox Co., The: *See*—
Sprague, Theodore S. 3,395,676.
Backer, Frank: *See*—
Lusskin, Robert M., Backer, and Larson. 3,396,147.
Bacon, Robert E., and B. D. Illingsworth, to Eastman Kodak Co. Light-developable direct-print silver halide emulsions containing urazole compounds as halogen acceptors. 3,396,017, 8-6-68, Cl. 96—27.
Badger Meter Mfg. Co.: *See*—
Simonds, George D., Jr. 3,395,578.
Badische Anilin- & Soda-Fabrik Aktiengesellschaft: *See*—
Bartholome, Ernst, Lehrer, and Schierwater. 3,396,207.
Braun, Willy, and Schefczik. 3,396,172.
Reppe, Walter, and Magin. 3,396,191.
Baggett, Joseph W.: *See*—
Cogdell, David M., McClure, and Baggett. 3,395,829.
Baker, Henry W., to Pilkington Bros. Ltd. Method of and apparatus for toughening sheets of glass with a reserve zone. 3,396,001, 8-6-68, Cl. 65—115.
Baker Perkins Inc.: *See*—
Fierstine, Burton A. 3,395,807.
Baker, Theodore C., to Continental Can Co., Inc. Liquid tight container and method of forming same. 3,395,623, 8-6-68, Cl. 93—36.01.
Baker, Theodore C., B. B. Mathias, and J. R. Sager, to Owens-Illinois, Inc. Bottle inspection method and apparatus. 3,395,573, 8-6-68, Cl. 73—104.
Balassa, Imre, to Zinser-Textilmaschinen Gesellschaft mit beschrankter Haftung. Method and apparatus for the production of crimped yarns. 3,395,524, 8-6-68, Cl. 57—34.
Baldwin, D. H., Co.: *See*—
Scherer, Robert C. 3,396,284.
Ball, David M., deceased (by R. A. Ball, administratrix), and R. I. Disman, to Sylvania Electric Products Inc. Receiver system including spurious signal detector. 3,396,395, 8-6-68, Cl. 343—113.
Ball, Regina A.: *See*—
Ball, David M., and Disman. 3,396,395.
Ballard, Bruce, and R. Pizer, to Elapc, Inc. Connecting matrix structure. 3,396,358, 8-6-68, Cl. 339—18.
Balle, Walter, and P. Musch, to Firma Leonh. Herbert, Maschinenfabrik. Methods for the vulcanizing of preformed tires. 3,396,221, 8-6-68, Cl. 264—315.
Ballestra, Mario. Apparatus for effecting continuous exothermic reaction between at least two fluid reagents. 3,395,990, 8-6-68, Cl. 23—284.
Balz, Charles F.: *See*—
Murphy, Dennis J., and Balz. 3,396,264.
Banister Corp., The: *See*—
Haw, Sherwood G. 3,395,797.
Banse, George, to National Mfg. Co. Fence. 3,395,489, 8-6-68, Cl. 49—381.
Baraclem S.A.: *See*—
Gonnard, Francois L. G. 3,396,056.
Barber, Sidney J.: *See*—
Smith, Robert K., and Barber. 3,396,111.
Barbour, Denis R.: *See*—
Whittaker, Jack D., Loveday, Barbour, Tweedle, and Dryden. 3,395,458.
Bardwell, John E. Mercury chatter hammer. 3,395,767, 8-6-68, Cl. 173—293.
Barnes, Robert G., to General Electric Co. Gas scrubber. 3,395,510, 8-6-68, Cl. 55—20.
Barr and Stroud Ltd.: *See*—
Davy, John R., McKillop, and Brash. 3,396,238.
Barr, Victor L., and H. K. Schmidt, to Roller Bearing Co. of America. Self-aligning bushing. 3,395,951, 8-6-68, Cl. 308—72.
Barrett, William R.: *See*—
Greenburg, Jesse J., and Barrett. 3,395,503.
Barthel, Roy W. and H. R. Jaquith, to Taylor Instrument Companies. Force balance instrument having V-notch mounted shaft and overrange protection. 3,396,374, 8-6-68, Cl. 340—187.
Bartholome, Ernst, E. Lehrer, and F. W. Schierwater, to Badische Anilin- & Soda-Fabrik Aktiengesellschaft. Production of acetylene by thermal cracking of hydrocarbons. 3,396,207, 8-6-68, Cl. 260—679.
Bartholomew, Albert P., Jr., to Electro-Mechanical Instrument Co. Accelerometer. 3,395,583, 8-6-68, Cl. 73—514.
Bartlett, Roscoe G., Jr., and E. J. Brunsman, to United States of America, Navy. End tidal sampler for an oxygen breathing mask. 3,395,701, 8-6-68, Cl. 128—146.5.
Bartlett-Snow-Pacific, Inc.: *See*—
Isheim, Maynard C., and Stroshane. 3,395,905.
Bartley, William E., III: *See*—
Martin, Cecil G., and Bartley. 3,395,854.
Bartocha, Bodo K. W.: *See*—
Fetter, Neil R., and Bartocha. 3,396,170.
Bartoli, Lanfranco, and C. Fondi, to Contraves Italiana S.p.A. Accelerometric automatic pilot for missiles. 3,395,874, 8-6-68, Cl. 244—3.2.
Barton, Robert M. Contraction joint strip and method and apparatus for installing the same. 3,395,627, 8-6-68, Cl. 94—51.
Basler, Gunter: *See*—
Hosemann, Rolf, and Basler. 3,396,337.
Bass, Michael J. A.: *See*—
Dodson, Ian G., and Bass. 3,395,916.
Bassecches, Mark T.: *See*—
Bierman, Eugene. 3,396,250.
Bauer, Lieselotte: *See*—
Miksch, Johannes, and Bauer. 3,396,121.
Bauer, Rudolf: *See*—
Ungerer, Fritz. 3,395,559.
Baxter, Jerold D., to Atwood Vacuum Machine Co. Indexable clamping machine. 3,395,911, 8-6-68, Cl. 269—31.
Bayliff, Robert, W. J. Le Blanc, and J. Sidles, to The B. F. Goodrich Co. Aircraft landing gear. 3,395,879, 8-6-68, Cl. 244—108.
Beal, Richard: *See*—
Burge, Joseph C., and Beal. 3,395,891.
Beasley, Noel F., to Puritan Compressed Gas Corp. Spirometer. 3,395,699, 8-6-68, Cl. 128—2.08.
Beavers, Dorothy J., and G. K. Edmonds to Eastman Kodak Co. Diffusion transfer system. 3,396,018, 8-6-68, Cl. 96—29.
Bechard, Emile, 50% to R. G. LeVaux. Rotary multi-compartment distillation drum having radially adjustable outlet to vary thickness of liquid layer. 3,396,088, 8-6-68, Cl. 202—238.
Beck, Edwin H., to Manufacturers Supplies Co. Leather jointing. 3,396,068, 8-6-68, Cl. 161—38.
Beckman Instruments, Inc.: *See*—
Sperry, Elmer A., III. 3,396,331.
Beeler, Allan E.: *See*—
Chouinard, Alfred F., and Beeler. 3,395,703.
Behringer, Norman C., and D. R. Treffeisen, to Sperry Rand Corp. Binary digital-to-analogue converters. 3,396,383, 8-6-68, Cl. 340—347.
Belcher, Samuel L., D. O. Biglin, J. R. Grothjan, and C. E. Koeniger, to Owens-Illinois, Inc. Plastic container. 3,395,826, 8-6-68, Cl. 220—60.
Bell, Malcolm R., to Sterling Drug Inc. 2,4-Bis-substituted-benzylidene or-pyridyl-methylene-8-thiabicyclo[3.2.1]octan-3-ones. 3,396,162, 8-6-68, Cl. 260—240.
Bell, Richard J., R. L. Campbell, Jr., P. Gibson, and J. F. Sims, to Anderson, Clayton & Co. Process for the manufacture of hard butter. 3,396,037, 8-6-68, Cl. 99—118.
Bell Telephone Laboratories Inc.: *See*—
Harris, William B. 3,396,293.
Kowaleski, Clarence. 3,396,244.
Rand, Myron J. 3,396,052.
Bellock, John, to J. Spiegel Mfg. Corp. Garment racks. 3,395,811, 8-6-68, Cl. 211—178.
Belote, James M., D. Churchill, H. J. Earle, and G. Gelman, to Gelman Instrument Co. Magnetic holder for electrophoresis material. 3,396,096, 8-6-68, Cl. 204—299.
Benard, Emil J. J., to N.V. Vereenigde Glasfabrieken (United Glassworks). Paste mold with evaporation grooves. 3,396,002, 8-6-68, Cl. 65—267.
Benbow, Robert S. Weighing gambrel. 3,395,768, 8-6-68, Cl. 177—225.
Benckiser, John, A., G.m.b.H. Chemische Fabrik: *See*—
Miksch, Johannes, and Bauer. 3,396,121.
Benedetti, Nello L.: *See*—
Kolze, Lawrence A., Schaff, and Benedetti. 3,395,885.
Bennetch, Leonard M., to Chas. Pfizer Co., Inc. Process for the preparation of iron oxide. 3,395,983, 8-6-68, Cl. 23—200.
Bennett, Howard P.: *See*—
Wade, Ricardo H., Welch, and Bennett. 3,395,971.
Benziger, Theodore M., L. W. Kissinger, and H. E. Ungnade to United States of America, Atomic Energy Commission β-Di and trinitro carbonates and method for their production. 3,396 187, 8-6-68, Cl. 260—463.
Benzuly, Harold J., to Warwick Electronics Inc. Horizontal sweep circuit. 3,396,237, 8-6-68, Cl. 178—7.3.
Beres, Steven W., and W. R. O'Donnell, to Valve Corp. of America. Manually operable dispenser valve. 3,395,838, 8-6-68, Cl. 222—402.14.
Berg, Milford E.: *See*—
Even, Thomas M., and Berg. 3,396,263.
Berkowitz, Nathan L. Key-operated and permutation lock with key-controlled dismounting and combination change. 3,395,557, 8-6-68, Cl. 70—285.
Bernard, Frank: *See*—
Gilbert, Jack J. 3,395,469.
Bernstein, Jack, and H. M. Engel, to E. R. Squibb & Sons, Inc. Penicillin and cephalosporin derivatives. 3,396,159, 8-6-68, Cl. 206—239.1.
Berry, Ronald, to Magnesium Elektron Ltd. Formation of vanadium trichloride from vanadium tetrachloride. 3,395-974, 8-6-68, Cl. 23—17.
Bertin & Cie: *See*—
Duthion, Louis, and Bertin. 3,395,773.
Bertin, Jean H.: *See*—
Duthion, Louis, and Bertin. 3,395,773.
Bertram, Ernst and Wilhelm: *See*—
Bertram, Wilhelm. 3,395,609.
Bertram, Wilhelm, to Ernst and Wilhelm Bertram. Light meter. 3,395,609, 8-6-68, Cl. 88—23.
Best, Howard S., and B. Titow, to Corning Glass Works. Pillar attachment machine. 3,395,844, 8-6-68, Cl. 228—1.
Best, Howard S., and A. E. Borchert, to Corning Glass Works. Chip bonding machine. 3,395,845, 8-6-68, Cl. 228—1.
Beta Corp.: *See*—
Emerson, Allan R. 3,396,376.
Bethlehem Steel Corp.: *See*—
Finney, James A., Jr., and Jablin. 3,395,512.
Betzold, Edward R., to United States of America, Navy. Surface launching torpedo tubes. 3,395,670, 8-6-68, Cl. 114—238.

Beun, Jacobus P.: *See*—
Koorneef, Jacob, and Beun. 3,395,450.
Beyerlein, Fritz-Werner, to Siemens Aktiengesellschaft. Method for mass producing semiconductor devices. 3,395,447, 8-6-68, Cl. 29—588.
Biddle, Charles E., Sr.: *See*—
Fisher, James O., Sr., Biddle, and Felock. 3,395,544.
Bielskis, Edward: *See*—
Leo, Albert J., and Bielskis. 3,396,039.
Bierman, Eugene, ⅛ to Mark T. Bassecches. Variable radix counter and programmable sequential timing device. 3,396,250, 8-6-68, Cl. 200—35.
Biglin, Duane O.: *See*—
Belcher, Samuel L., Biglin, Grothjan, and Koeniger. 3,395,826.
Billek, Gerhard, to Etapharm chem. pharm. Laboratorium Gesellschaft m.b.H. Hyaluronic acid preparation and method of producing same. 3,396,081, 8-6-68, Cl. 195—7.
Bishop, Charles F., to Monsanto Co. Coating composition containing styrene-maleic anhydride partial ester copolymer as emulsifier. 3,396,135, 8-6-68, Cl. 260—29.6.
Bissell, Inc.: *See*—
Hughes Martin R. 3,395,416.
Black, Robert H. Lock washer. 3,395,743, 8-6-68, Cl. 151—30.
Black, Stanley H., and R. S. Jacobson, to Sperry Rand Corp. Constant deviation ratio FM transmitter. 3,396,340, 8-6-68, Cl. 325—138.
Blackburn, Archie B., to The Dow Chemical Co. Decalcification of bones. 3,396,222, 8-6-68, Cl. 424—3.
Blackman, Robert J., to Eastman Kodak Co. Reflective photoelectric pickups. 3,396,281, 8-6-68, Cl. 250—239.
Blair, George. Method of casting reentrant angles. 3,395,748, 8-6-68, Cl. 164—122.
Blair, George. Method of casting reentrant angles. 3,395,749, 8-6-68, Cl. 164—122.
Blair, Ronald A., to General Electric Co. Power units such as gear motors with improved motor base and adapter assembly. 3,395,594, 8-6-68, Cl. 74—606.
Blanchette, Howard M., and W. R. Osban, to Monsanto Co. Anchored synthetic turf. 3,395,625, 8-6-68, 94—7.
Blau, Arthur A., and L. L. Schlackman, to Extrudyne, Inc. Self-insulating covering element. 3,395,508, 8-6-68, Cl. 52—530.
Bleibtreu, Alexander, to Maschinenfabrik Rheinhausen Gebruder Scheubeck K.G. Arrangement for avoiding eddy current losses in transfer switch and selector switch units with interposed gear drive. 3,396,254, 8-6-68, Cl. 200—153.
Bleigh, Harold R., and G. W. Walker, to Caterpillar Tractor Co. Flywheel rotation device. 3,395,588, 8-6-68, Cl. 74—405.
Blondheim, William S., and A. P. Patton, to Motomco Inc. Process of conveying difficultly dispersible materials into a readily dispersible form and products obtained thereby. 3,396,034, 8-6-68, Cl. 99—93.
Bodnarescu, Musat V., to European Atomic Energy Community (Euratom). Manufacture of radio-isotopes, 3,396,077, 8-6-68, Cl. 176—15.
Boillat, Philippe, to Roulements Minatures, S.A. Pre-selsitized ball bearings. 3,395,954, 8-6-68, Cl. 308—183.
Bolger, James W., to Rexall Drug and Chemical Co. 9-Aminomethyl-3,8-diloweralkyl-10-hydroxy-5-oxo-1,2,3,4-tetrahydrobenzopyrano[3,4-c]pyridines. 3,396,165, 8-6-68, Cl. 260—247.2.
Bolger, James W., to Rexall Drug and Chemical Co. 7-Aminomethyl-8-hydroxy-5-oxo-1,2,3,4-tetrahydrobenzopyrano[3,4-c] pyridines. 3,396,166, 8-6-68, Cl. 260—247.2.
Bonhomme, Francois R., to Connectronics Corp. Electrical socket member having intermediate resilient strips and process for making same. 3,396,364, 8-6-68, Cl. 339—217.
Bonin, George E., to Corning Glass Works. Cutter for glass pipe. 3,395,493, 8-6-68, Cl. 51—90.
Bonotto, Sergio, and E. R. Wagner, to Union Carbide Corp. Compositions of polyvinylchloride and randomly chlorinated polyethylene. 3,396,211, 8-6-68, Cl. 260—897.
Bookout, Conrad B., to F. A. Young Machine Co., Inc. Bobbin drive gear for textile roving frame. 3,395,526, 8-6-68, Cl. 57—102.
Boothe, Willis A., and W. A. Lanza, to General Electric Co. Fluid-operated control system. 3,395,719, 8-6-68, Cl. 137—22.
Borchers, Henning H., to Azoplate Corp. Planographic printing plate. 3,396,020, 8-6-68, Cl. 96—33.
Borchert, Alfred E.: *See*—
Best, Howard S., and Borchert. 3,395,845.
Borel, Ronald F., and E. S. Lee, III, to General Electric Co. Gas turbine engine afterburner fuel control and ignition. 3,395,538, 8-6-68, Cl. 60—243.
Borg, Tore E., F. E. Elliott, and S. Zysk, to General Electric Co. Temperature sensing cable and method for making same. 3,396,357, 8-6-68, Cl. 338—26.
Borisov, Igor S.: *See*—
Vinogradov, Alexander S., Kapustin, Kiselnikov, Bosisov, and Mazalov. 3,395,425.
Bork, Karl-Heinz: *See*—
Irmscher, Klaus, Bork, and Kraft. 3,396,161.
Bosch, Robert, Elektronik und Photokino G.m.b.H.: *See*—
Ackermann, Karl, and Paape. 3,395,871.
Bosch, Robert, G.m.b.H.: *See*—
Kind, Wilhelm, and Schneider. 3,396,249.
Bouzou, Georges: *See*—
Auchapt, Pierre, and Bouzou. 3,395,988.
Bowers, Donald J.: *See*—
Hedden, Walter A., Bowers, and King. 3,396,055.
Bowyer, Charles S., to United States of America, Navy. Proportional counter tube having a plurality of interconnected ionization chambers. 3,396,300, 8-6-68, Cl. 313—93.
Boyd, Harold C. T., and R. A. Evans. Hand truck for material handling. 3,395,817, 8-6-68, Cl. 214—370.
Brandstetter, Georg, to Sulzer Bros., Ltd. Tube lining for prismatic combustion chambers. 3,395,677, 8-6-68, Cl. 122—235.
Brandt, Harold A., ⅓ to Roland L. Willett, and ⅓ to James A. Tindal. Vehicle wheel hub bearing oil bath adaptor. 3,395,950, 8-6-68, Cl. 308—36.2.
Brasch, Jay, to Esso Research and Engineering Co. One step preparation of metal organo dithiophosphates. 3,396,183, 8-6-68, Cl. 260—429.
Brash, Eric B.: *See*—
Davy, John R., McKillop, and Brash. 3,396,238.
Brauer, Lothar W., to Auergesellschaft G.m.b.H. Sulfur dioxide absorbent. 3,396,122, 8-6-68, Cl. 252—428.
Braun, Dieter, and K. Rudinger, to Fortuna-Werke Spezialmaschinenfabrik AG. Cutting device with compensation for wear of the cutting edge. 3,395,595, 8-6-68, Cl. 83—174.
Braun, Willy, and E. Schefczik, to Badische Anilin- & Soda-Fabrik Aktiengesellschaft. Anthraquinone dyes containing pyromellitamide groups. 3,396,172, 8-6-68, Cl. 260—326.
Bremer, Sherman L., to National Distillers and Chemical Corp. Combined reaming and facing tool. 3,395,435, 8-6-68, Cl. 29—103.
Bremshey & Co.: *See*—
Weber, Heinz. 3,395,717.
Brewer, Claire N., to International Typographical Union of North America. Apparatus for effecting sequential operation of the keys of a tape perforating machine. 3,395,860, 8-6-68, Cl. 234—15.
Briand, Augustin: *See*—
Sivilotti, Olivo G., and Briand. 3,396,094.
Briggs & Stratton Corp.: *See*—
Harkness, Joseph R. 3,395,687.
Brinkmeyer, Francis M.: *See*—
McCarthy, William C., and Brinkmeyer. 3,395,867.
Bristol Siddeley Engines Ltd.: *See*—
Mansell, Stanley W., and Marchant. 3,395,955.
Bristow, Robert H., to General Electric Co. Titanium activated nickel seal and method of forming it. 3,395,993, 8-6-68, Cl. 29—195.
British Drug Houses Ltd., The: *See*—
Burn, Derek, Coombs, and Petrow. 3,396,179.
British Hovercraft Corp., Ltd.: *See*—
Francis, Frank P. G., and Watts. 3,395,772.
British Ropes Ltd.: *See*—
Campbell, Robert E. 3,395,530.
British Telecommunications Research Ltd.: *See*—
Lakhani, Azizuddin H. I. 3,396,368.
Brock, Frank J., and F. Feakes, to National Research Corp. Gauge calibration by diffusion. 3,395,565, 8-6-68, Cl. 73—4.
Brooks, John D., to United States of America, Navy. Magnetohydrodynamic-vortex stream transducer. 3,395,720, 8-6-68, Cl. 137—81.5.
Brooks, John H., to McCulloch Corp. Constant-peak pressure, rotary valve engine and method of operation thereof. 3,395,680, 8-6-68, Cl. 123—78.
Broom, Ronald F. J., to National Research Development Corp. Semiconductor laser array. 3,396,344, 8-6-68, Cl. 331—94.5.
Brothman, Abraham, M. Gomery, A. H. Miller, and L. Horowitz, to Sangamo Electric Co. Quaternary decision logic system. 3,396,369, 8-6-68, Cl. 340—146.1.
Broughton, Donald B., to Universal Oil Products Co. Solvent extraction of highly aromatic charge stocks. 3,396,101, 8-6-68, Cl. 208—313.
Brown, Alexander M., and W. K. Carrico, to Roehr Products, Inc. Physiological fluid transfer apparatus. 3,395,696, 8-6-68, Cl. 128—2.
Brown Co.: *See*—
Buttery, Kenneth T. 3,395,830.
Brown, Graham M., to Charles Churchill and Co., Ltd. Slideway system. 3,395,947, 8-6-68, Cl. 308—5.
Brown, Paul L. Snap-on tape dispenser. 3,395,841, 8-6-68, Cl. 225—65.
Browne, Colin L., to Celanese Corp. Smoke filters. 3,396,061, 8-6-68, Cl. 156—178.
Browning, Bruce W., to Browning Industries, Inc. Trigger mechanism for firearms. 3,395,613, 8-6-68, Cl. 89—146.
Browning Industries, Inc.: *See*—
Browning, Bruce W. 3,395,613.
Bruce, Theodore B., and J. F. Nelson, to United States Steel Corp. Apparatus for turning products. 3,395,813, 8-6-68, Cl. 214—1.
Brunner, Alfred, to Sulzer Bros. Ltd. Irradiation equipment with means to convey goods at a non-uniform speed past a radiation source for maximum exposure. 3,396,273, 8-6-68, Cl. 250—52.
Brunsman, Edward J.: *See*—
Bartlett, Roscoe G., Jr., and Brunsman. 3,395,701.
Brunswick Corp.: *See*—
Christner, Oval F. 3,395,679.
Minks, Floyd M. 3,395,684.
Minks, Floyd M. 3,395,685.
Minks, Floyd M. 3,395,686.
Bryant, Paul J., and C. M. Gosselin, to Midwest Research Institute. Method of treating glass to reduce helium permeation. 3,395,997, 8-6-68, Cl. 65—30.
Bub, Robert A., to Mine Safety Appliances Co. Filter testing system and method. 3,395,514, 8-6-68, Cl. 55—97.
Buccicone, Dario, to Buccicone Engineering Co., Inc. Sheet handling machine. 3,395,914, 8-6-68, Cl. 271—68.
Buccicone Engineering Co., Inc.: *See*—
Buccicone, Dario. 3,395,914.
Buchanan, James L., and W. B. Zelina, to General Systems Inc. Instrument-type transformers for unidirectional current circuits. 3,396,338, 8-6-68, Cl. 324—117.

Buck, Norman R. Soldering device. 3,395,847, 8–6–68, Cl. 228—53.
Buddecke, Charles L., W. E. Meyer, and R. S. Stites, to North American Rockwell Corp. Image projection device. 3,396,-305, 8–6–68, Cl. 315—12.
Bueler, Richard C., to Wagner Electric Corp. Application valve. 3,395,944, 8–6–68, Cl. 303—52.
Buensod-Stacey Corp.: *See*—
  Warren, Robert M., Jr., and Kornhauser. 3,395,633.
Burch, Charles J., to United States Steel Corp. Method and apparatus for granulating slag. 3,395,995, 8–6–68, Cl. 65—19.
Burdick, Glen A., to Sylvania Electric Products Inc. Multiple electron gun structure for cathode ray tube. 3,396,297, 8–6–68, Cl. 313—70.
Burdyn, Ralph F., and L. D. Wiener, to Mobil Oil Corp. Drilling fluid treatment. 3,396,105, 8–6–68, Cl. 252—8.5.
Buresch, Raymond J.: *See*—
  MacFadden, John A., and Buresch. 3,395,877.
Burge, Joseph C., and R. Beal, to General Electric Co. Lock for turbomachinery blades. 3,395,891, 8–6–68, Cl. 253—77.
Burger, Hermann, to W. Ferd. Klingelnberg Sohne. Tool grinding machine with wet grinding device. 3,395,492, 8–6–68, Cl. 51—50.
Burger, Hermann, and G. Zeise, to W. Ferd. Klingelnberg Sohne. Device for radial adjustment of a grinding head of a tool grinding machine. 3,395,491, 8–6–68, Cl. 51—34.
Burgin, Kermit H. Citrus fruit harvester. 3,395,523, 8–6–68, Cl. 56—328.
Burham, Francis P., and R. W. Hamilton, to International Resistance Co. Apparatus for vapor coating tumbling substrates. 3,395,674, 8–6–68, Cl. 118—49.1.
Burlington Industries Inc.: *See*—
  McKinnon, Allen G. 3,395,865.
Burn, Derek, R. V. Coombs, and V. Petrow, to The British Drug Houses Ltd. Process for the preparation of steroidal 6-halo-methyl-4,6-dien-3-ones. 3,396,179, 8–6–68, Cl. 260—397.4.
Burness, Donald M., and B. D. Wilson, to Eastman Kodak Co. Photographic hardeners. 3,396,127, 8–6–68, Cl. 260—8.
Burnier, Pierre: *See*—
  Hochart, Bernard, and Burnier. 3,396,355.
Burr, Robert P., and R. L. Swiggett, to Circuit Research Co. Method of testing printed circuit conductors. 3,396,335, 8–6–68, Cl. 324—51.
Burrows, Raymond C., to Ashland Oil & Refining Co. Process of preparing inorganic foams from alkali metal silicates and aluminum. 3,396,112, 8–6–68, Cl. 252—62.
Bus, Johannes A., to Bus-Wand AG. Pivot mounting for multiple doors of swinging door cabinet. 3,395,423, 8–6–68, Cl. 16—135.
Bus-Wand AG: *See*—
  Bus, Johannes A. 3,395,423.
Bushi, Michael, to The Quality Tool & Die Co. Cup drawing die and method. 3,395,562, 8–6–68, Cl. 72—350.
Bushick, Ronald D., to Sun Oil Co. Alumino-silicate catalyzed reactions of polycyclic aromatic hydrocarbons. 3,396,203, 8–6–68, Cl. 260—668.
Busler, William R.: *See*—
  Wofford, Clinton F., Busler, and Hsieh. 3,396,125.
Butler, Henry G.: *See*—
  Weise, Irvin B., and Butler. 3,395,727.
Butler, Thomas A., and H. F. Wiese, to The Lubrizol Corp. Lubricants containing reaction product of a metal phosphinodithioate with an amine. 3,396,109, 8–6–68, Cl. 252—32.7.
Buttery, Kenneth T., to Brown Co. Dispensing carton suitable for plastic bags and the like. 3,395,830, 8–6–68, Cl. 221—63.
Button, Peter A., J. V. Miller, and P. F. King, to Xerox Corp. Xerographic facsimile printer having light scanning and electrical charging. 3,396,235, 8–6–68, Cl. 178—6.6.
Bysath, Kurt, to Sulzer Bros., Ltd. Sealing compound for high temperature use. 3,396,045, 8–6–68, Cl. 106—243.
Caldwell, John R., to Eastman Kodak Co. Polyamides from methylene dibenzoic acid characterized by relatively high softening and melting points. 3,396,151, 8–6–68, Cl. 260—78.
Callahan, Francis J., Jr., to Crawford Fitting Co. Assembly device. 3,395,457, 8–6–68, Cl. 33—174.
Callender, Earl R., to Westinghouse Air Brake Co. Electromagnetic latching relay. 3,996,351, 8–6–68, Cl. 335—113.
Callow, Donald S., to National Research Development Corp. Preferential production of cephalosporin C, penicillin N, or cephalosporin P. 3,396,083, 8–6–68, Cl. 195—36.
Calvert, James D., to International Business Machines Corp. Polling system. 3,396,372, 8–6–68, Cl. 340—172.5.
Cambridge Thermionic Corp.: *See*—
  Melanson, William A. 3,396,359.
Campbell Auto-Pour Engineering: *See*—
  Rice, Robert B., Jr. 3,395,833.
Campbell, Gregory R. Pendulum clock mechanism. 3,395,533, 8–6–68, Cl. 58—129.
Campbell, James G., and R. Lurie; said Campbell, assor. to Campbell-Lurie Plastics, Inc. Flower pot. 3,395,486, 8–6–68, Cl. 47—34.
Campbell, John H., to General Electric Co. Transistor inverter lamp ballasting circuit. 3,396,307, 8–6–68, Cl. 315—221.
Campbell-Lurie Plastics, Inc.: *See*—
  Campbell, James G., and Lurie. 3,395,486.
Campbell, Robert E., to British Ropes Ltd. Ropes, strands and cores. 3,395,530, 8–6–68, Cl. 57—153.
Campbell, Robert L., Jr.: *See*—
  Bell, Richard J., Campbell, Gibson, and Sims. 3,396,037.
Canadian Breweries Ltd.: *See*—
  Parsons, Robert H., Kormendy, and Jackson. 3,396,031.
Capowski, Julius: *See*—
  Andress, Harry J., Jr., and Capowski. 3,396,106.

Caprara, Pierre. Watch case. 3,395,531, 8–6–68, Cl. 58—90.
Carlisle Chemical Works, Inc.: *See*—
  Hechenbleikner, Ingenuin, Dalter, and Hussar. 3,396,185.
Carlisle, Richard W.: *See*—
  Midlock, Bernard J., and Carlisle. 3,396,366.
Carlson, Ronald J.: *See*—
  Davis, Myron, and Carlson. 3,395,444.
Carothers, William D.: *See*—
  Young, William G., Horning, and Carothers. 3,395,941.
Carrico, Wayne K.: *See*—
  Brown, Alexander M., and Carrico. 3,395,696.
Carson, Frank J., C. W. Ferguson, G. F. Ritter, Jr., and F. J. Hymore, to Libbey-Owens-Ford Glass Co. Method of and apparatus for bending and tempering glass sheets by differential heating. 3,396,000, 8–6–68, Cl. 65—104.
Carson, William R., Jr. Casket lid with upholstery and method of construction. 3,395,431, 8–6–68, Cl. 27—19.
Caruso, Gerard P., to Shell Oil Co. Extreme pressure soap and complex thickened greases. 3,396,108, 8–6–68, Cl. 252—18.
Casini, Vittorio, to Piaggio & Co. S.p.A. Torque-sensitive stepless speed change gear. 3,395,587, 8–6–68, Cl. 74—230.17.
Castro, Neto. Tap and register. 3,395,888, 8–6–68, Cl. 251—256.
Caterpillar Tractor Co.: *See*—
  Babbitt, John H., Jr. 3,395,770.
  Bleigh, Harold R., and Walker. 3,395,588.
  Clark, Richard B. 3,395,855.
  Clark, Richard B. 3,395,856.
  Medley, Jackson C., Smith, and Franz. 3,395,946.
  Wirt, Leon A. 3,395,764.
Cavalli, Arnold, and L. Magid, to Hoffmann-La Roche Inc. Nongranulated compressed tablets of ascorbic acid with microcrystalline cellulose. 3,396,226, 8–6–68, Cl. 424—280.
Celanese Corp.: *See*—
  Browne, Colin L. 3,396,061.
Cellier, Jacques E. Process and apparatus for putting kaolin in an absolutely homogeneous suspension. 3,395,895, 8–6–68, Cl. 259—43.
Chamberlain, Ralph J.: *See*—
  Vitalis, Emil A., and Chamberlain. 3,396,153.
Chamberlin, Howard A., and J. C. Masson, to Monsanto Co. Sodium borohydride as a polymerization inhibitor for a redox system. 3,396,154, 8–6–68, Cl. 260—85.5.
Chandler Evans Inc.: *See*—
  Eckert, Arthur F. J., and Moorcroft. 3,395,890.
Chang, Paul T., and K. M. Kosanke, to International Business Machines Corp. Light modulator. 3,395,960, 8–6–68, Cl. 350—150.
Chapman, George W. A.: *See*—
  Mathew, Leonard S., and Chapman. 3,395,820.
Chapman, William P., C. C. Smith, and J. C. Donovan, to Johnson Service Co. Binary coded control. 3,396,379, 8–6–68, Cl. 340—347.
Charlton, Thomas E., and R. K. Long, to United States of America, Air Force. Aircraft nose radome with ceramic cover mounted on metallic framework. 3,396,396, 8–6–68, Cl. 343—708.
Chartrice, Rene: *See*—
  Nieder, Rene. 3,395,964.
Checkley, Peter E., J. C. Escott, and C. R. Little, to Dowty Mining Equipment Ltd. Telescopic hydraulic devices for controlling the speed of railway vehicles. 3,395,650, 8–6–68, Cl. 104—162.
Chemetron Corp.: *See*—
  Chouinard, Alfred F., and Beeler. 3,395,703.
  Dickson, Charles A., and Ter Horst. 3,396,150.
Chemische Fabrik Pfersee G.m.b.H.: *See*—
  Enders, Heinz, and Pusch. 3,396,050.
Childs, Donald A. Portable hitch. 3,395,933, 8–6–68, Cl. 280—457.
Chisnell, Dean: *See*—
  Serratoni, Paul J., A. R., and Chisnell. 3,395,612.
Chouinard, Alfred F., and A. E. Beeler, to Chemetron Corp. Nebulizer. 3,395,703, 8–6–68, Cl. 128—194.
Chovan, Dale A., to Westinghouse Air Brake Co. Angle cock with positive sealing pressure reduction means. 3,395,889, 8–6–68, Cl. 251—163.
Chow, Ken-Tang, to Electro-Nuclear Laboratories, Inc. Charged particle detector with lithium compensated intrinsic silicon as an intermediate region. 3,396,318, 8–6–68, Cl. 317—234.
Christensen, Donald L., to Monsanto Co. Laminated safety glass. 3,396,074, 8–6–68, Cl. 161—199.
Christner, Oval F., to Brunswick Corp. Two-cycle engine and cylinder block therefor. 3,395,679, 8–6–68, Cl. 123—73.
Chrysler Corp.: *See*—
  Serratoni, Paul J. and A. R., and Chisnell. 3,395,612.
  Zimmerman, Hollis P., Jr. 3,395,671.
Churchill, Charles, and Co., Ltd.: *See*—
  Brown, Graham M. 3,395,947.
Churchill, Donald: *See*—
  Belote, James M., Churchill, Earle, and Gelman. 3,396,096.
Ciba Corp.: *See*—
  Schenker, Karl. 3,396,171.
Ciba Ltd.: *See*—
  Thornton, David A., and Jones. 3,396,177.
Circuit Research Co.: *See*—
  Burr, Robert P., and Swiggett. 3,396,335.
Clabaugh, William J., to United States of America, Atomic Energy Commission. Jet pump. 3,395,647, 8–6–68, Cl. 103—278.
Clark, J. L., Mfg. Co.: *See*—
  Latawiec, John S. 3,395,827.
Clark, Richard B., to Caterpillar Tractor Co. Air compressor system employing recirculating means. 3,395,855, 8–6–68, Cl. 230—22.
Clark, Richard B., to Caterpillar Tractor Co. Air compressor oil control system. 3,395,856, 8–6–68, Cl. 230—206.

Clarke, Chapman & Co. Ltd.: *See*—
  Somerville, William M. 3,396,291.
Clary, Reed R., III: *See*—
  Rutland, James W., and Clary. 3,395,410.
Claudel, Junor O. Indicia mounting frame for overhead projectors. 3,395,477, 8–6–68, Cl. 40—158.
Clausen, Victor H., and A. Zweig, to Simpson Timber Co. Vacuum stacker apparatus. 3,395,915, 8–6–68, Cl. 271—74.
Claybaugh, Billy E., J. K. Nickerson, and J. M. Powers, to Esso Research and Engineering Co. Dimethylterephthalate recovery from paraxylene feed. 3,396,087, 8–6–68, Cl. 203—6.
Clayton, James H., to G. A. Harvey & Co. (London) Ltd. Apparatus for contacting or separating materials. 3,395,-805, 8–6–68, Cl. 210—179.
Clayton Mark & Co.: *See*—
  Dodson, Richard J. 3,395,614.
Clements, Herbert A., to S.S.S. Patents Ltd. Synchronous self-shifting clutches. 3,395,782, 8–6–68, Cl. 192—67.
Clyde Iron Works Inc.: *See*—
  Kumpf, August W. 3,395,893.
Cofer, Daniel B., and G. C. Ward, to Southwire Co. Apparatus for and process of coiling rods. 3,395,560, 8–6–68, Cl. 72—66.
Cogdell, David M., W. F. McClure, and J. W. Baggett; said McClure assor. of 11⅓% each to said Cogdell and said Baggett. Medication dispensing means. 3,395,829, 8–6–68, Cl. 221—15.
Cohen, Herman. Process for preserving citrus fruit food products. 3,396,040, 8–6–68, Cl. 99—186.
Cohon, Bertram. Lamp assembly. 3,396,268, 8–6–68, Cl. 240—81.
Collins, George E. Ammunition magazine with removable follower. 3,395,479, 8–6–68, Cl. 42—50.
Collins, John F., to United States Borax & Chemical Corp. Boron phosphate having high surface area and method for production therefor. 3,395,984, 8–6–68, Cl. 23—203.
Colonial Sugar Refining Co. Ltd., The: *See*—
  Thompson, Richard L., and Dwyer. 3,395,793.
Combustion Engineering, Inc.: *See*—
  Kochey, Edward L., Jr. 3,395,678.
  Schuss, Jack A. 3,395,657.
  Visner, Sidney. 3,396,078.
Comfort, Samuel T., to Allis-Chalmers Mfg. Co. Attachment control selector. 3,395,732, 8–6–68, Cl. 137—636.2.
Comly-Gillam Carton Corp.: *See*—
  Gillam, Edward D. 3,395,849.
Commissariat a l'Energie Atomique: *See*—
  Auchapt, Pierre, and Bonzou. 3,395,988.
  Karr, Claude. 3,395,967.
  Salvi, Antoine. 3,396,329.
Compagnie Generale des Etablissements Michelin Raison Sociale Michelin & Cie: *See*—
  Massoubre, Jean-Marie. 3,395,745.
  Massoubre, Jean-Marie. 3,396,063.
Connectronics Corp.: *See*—
  Bonhomme, Francois R. 3,396,364.
Consolidated Electrodynamics Corp.: *See*—
  Yuan, Lloyd T.-W. 3,396,328.
Contemporary Electronic Products Corp.: *See*—
  Kisrow, Le Verne A. 3,396,326.
Contevita, John, to International Environmental Dynamics. Suspension system for building construction. 3,396,502, 8–6–68, Cl. 52—236.
Conti, John D., to Shelly Bros., Inc. Stick inserting mechanism. 3,395,652, 8–6–68, Cl. 107—8.
Continental Can Co., Inc.: *See*—
  Baker, Theodore C. 3,395,623.
  Vercillo, Peter A. 3,395,839.
Continental Gummi-Werke A.G.: *See*—
  Nadler, Heinrich. 3,396,066.
Continental Machines, Inc.: *See*—
  Whitmore, Charles H. 3,395,643.
Continental Oil Co.: *See*—
  Cox, Eugene R. 3,396,134.
  Spencer, John R., and Greathouse. 3,395,858.
Contraves Italiana S.p.A.: *See*—
  Bartoli, Lanfranco, and Fondi. 3,395,874.
Controls Co. of America: *See*—
  Obermann, George. 3,395,585.
Cook, Edward G.: *See*—
  Anderson, James W., Heny, and Joyner. 3,396,286.
Coombs, Robert V.: *See*—
  Burn, Derek, Coombs, and Petrow. 3,396,179.
Cooper Industries, Inc.: *See*—
  Neill, Daniel L. 3,395,606.
  Neill, Daniel L. 3,395,608.
Cornell-Dubilier Electric Corp.: *See*—
  Robinson, William M. 3,396,319.
Corning Glass Works: *See*—
  Best, Howard S., and Titow. 3,395,844.
  Best, Howard S., and Borchert. 3,395,845.
  Bonin, George E. 3,395,493.
  Lewek, Stanley S. 3,395,999.
  Olcott, Joseph S. 3,395,998.
Corson, Carl R., and P. Hoffman, to Radio Corp. of America. Overdrive circuit for inductive loads. 3,396,314, 8–6–68, Cl. 317—148.5.
Corts, Gerald J. B., to N.V. Koninklijke Pharmaceutische Fabrieken v/h Brocades-Stheeman & Pharmacia. Dibenzocycloheptane derivatives. 3,396,168, 8–6–68, Cl. 260—292.
Cottrell, Clifton C.: *See*—
  Smith, Jacque A. 3,395,790.
Cottrell, Richard F., to Aerojet-General Corp. Frangible closure for auxiliary port in rocket housing. 3,395,825, 8–6–68, Cl. 220—47.

Couzens, Peter J., to Imperial Chemical Industries Ltd. Nonwoven polypropylene fabrics. 3,396,071, 8–6–68, Cl. 161—150.
Cowan, Edwon J. High efficiency space heater. 3,395,693, 8–6–68, Cl. 126—92.
Cox, Eugene R., to Continental Oil Co. Wax compositions having superior fast tack property. 3,396,134, 8–6–68, Cl. 260—28.5.
Cox, Frank T., and W. J. Williams, to Rockwell-Standard Co. Brake actuators. 3,395,584, 8–6–68, Cl. 74—110.
Cox, Leroy E., and T. D. Smith, to Moulded Chemical Products, Inc. Chemical process for a polyurethane elastomer. 3,396,051, 8–6–68, Cl. 117—161.
Crandon, Harry D., to American Optical Co. Method of making optical elements using ultrasonic vibration. 3,396,214, 8–6–68, Cl. 264—1.
Crawford Fitting Co.: *See*—
  Callahan, Francis J., Jr. 3,395,457.
Creter, Frederick G., to The Singer Co. Sewing machine drive mechanism. 3,395,661, 8–6–68, Cl. 112—220.
Crimmins, David J., to The Thomas & Betts Co. Laminated bus assemblies. 3,396,230, 8–6–68, Cl. 174—72.
Crockett, Garold D., and G. A. Dalphond. Thatch remover attachment for rotary lawnmowers. 3,395,521, 8–6–68, Cl. 56—295.
Crompton & Knowles Corp.: *See*—
  Wueger, Karl W. 3,395,737.
Cropper, Wendell P., to Standard Oil Co. Peak reader apparatus employing a servo rebalance motor operating in a single direction. 3,396,336, 8–6–68, Cl. 324—103.
Crosby, Hartzell L., and J. R. Parkinson, to Parkinson, Crosby & Works, Inc. Method of recovery of chemical values of a kraft pulping process of cellulosic material. 3,396,076, 8–6–68, Cl. 162—33.
Cross, John D., and L. Goodwin, to The De Havilland Aircraft Co. Ltd. Mass flow measuring apparatus. 3,395,726, 8–6–68, Cl. 137—468.
Crossland, Albert R., to Electro-Chem Corp. Method and composition for removing and inhibiting paraffin deposition. 3,395,757, 8–6–68, Cl. 166—41.
Crump, Lloyd R., to United States of America, Navy. Automatic and continuously variable radar receiver gain control. 3,396,389, 8–6–68, Cl. 343—5.
Cuff, David W., to American Optical Co. Method of making fine adjustment in numerical aperture of fiber optical devices. 3,395,994, 8–6–68, Cl. 65—17.
Culator Corp.: *See*—
  Langdon, Howard H. 3,395,426.
Cunningham, James A., and E. G. Hanna, to Texas Instruments Inc. Air-isolated integrated circuits. 3,396,312, 8–6–68, Cl. 317—101.
Curcio, John B., to Montone Mfg. Co. Hydraulic cylinder air bleed extension conduit and valve therefor. 3,395,939, 8–6–68, Cl. 298—22.
Curtiss-Wright Corp.: *See*—
  Avena, Samuel, and Leiner. 3,395,763.
  Kohman, Wayne E. 3,395,667.
  Stout, Ellarson R. 3,395,553.
Cusson, David E., to The Warner & Swasey Co. Disappearing table. 3,395,596, 8–6–68, Cl. 83—409.
Cyba, Henryk A., to Universal Oil Products Co. Boron acid ester of phenone. 3,396,186, 8–6–68, Cl. 260—462.
Cypress Gardens Skis, Inc.: *See*—
  Pope, Richard D., Jr., and Faught. 3,395,411.
  Rutland, James W., and Clary. 3,395,410.
Dalby, Gaston: *See*—
  Ferrara, Peter J., and Dalby. 3,396,033.
Dalphond, George A.: *See*—
  Crockett, Garold D., and Dalphond. 3,395,521.
Dalter, Raymond S.: *See*—
  Hechenbleikner, Ingenuin, Dalter, and Hussar. 3,396,185.
Dalton, Gerald J. Eraser cleaner. 3,395,413, 8–6–68, Cl. 15—4.
Dancy, William B., to International Minerals & Chemical Corp. Production of potassium sulfate. 3,395,980, 8–6–68, Cl. 23—121.
Danfoss A/S: *See*—
  Jensen, Arne. 3,395,446.
Daniels, William R.: *See*—
  Wolfsberg, Kurt, and Daniels. 3,395,992.
Daroff, H., & Sons, Inc.: *See*—
  Voice, Stanley M. 3,395,470.
Datta, Ranajit K., to General Electric Co. Strontium magnesium orthophosphate phosphors. 3,396,118, 8–6–68, Cl. 252—301.4.
Davidson, Frederic A., Jr., and R. D. Schaige, to Harsco Corp. Hoist tower. 3,395,501, 8–6–68, Cl. 52—30.
Davies, Alwyn G. Isocyanurate production. 3,396,167, 8–6–68, Cl. 260—248.
Davies, Daniel J.: *See*—
  Manion, Jean P., Hipp, and Davies. 3,396,098.
Davis, Edwin N., R. A. Rhodes, and L. L. Wallen, to United States of America, Agriculture. Glucan production by fermentation of fleshy fungi. 3,396,082, 8–6–68, Cl. 195—31.
Davis, Myron, and R. J. Carlson, to General Electric Co. Method of using explosives to coat a metal body. 3,395,444, 8–6–68, Cl. 29—529.
Davis, William B.: *See*—
  Grunig, James K., Aitkenhead, and Davis. 3,395,975.
Davy, John R., A. McKillop, and E. B. Brash, to Barr and Stroud Ltd. Automatic radio transmitting devices. 3,396,-238, 8–6–68, Cl. 178—26.
Dawson, Peter H. T.: *See*—
  Hasler, William S., Evans, Dawson, and Parker. 3,395,-432.
Deeg, Karl, and W. Hofmann, to Agfa-Gevaert Aktiengesellschaft. Slide projector. 3,395,473, 8–6–68, Cl. 40—79.

Deeg, Karl: *See*—
  Winkler, Alfred, Hofmann, and Deeg. 3,395,474.
Deering Milliken Research Corp.: *See*—
  Machell, Greville. 3,395,970.
Defrenne, Paul C. F., to Mecanorga S.A. Bearing and the like carrier means for movable members. 3,395,952, 8-6-68, Cl. 308—122.
De Havilland Aircraft Co. Ltd., The: *See*—
  Cross, John D., and Goodwin. 3,395,726.
Dehne, Clarence A., and H. A. Folsom, Jr., to Jervis B. Webb Co. Apparatus for stopping suspended conveyor carriers. 3,395,651, 8-6-68, Cl. 104—249.
Delbouille, Andre, and H. Toussaint, to Solvay & Cie. Transition metal catalysts for the polymerization and copolymerization of olefins. 3,396,155, 8-6-68, Cl. 260—80.78.
Della Bella, Davide: *See*—
  Teotino, Uberto, and Della Bella. 3,396,164.
Deloffre, Leon E., to Forges et Akteliers de La Nave, and Etudes et Recherches Industrielles et Scientifiques E.R.I.S. Propping frame for mining galleries. 3,395,542, 8-6-68, Cl. 61—45.
Deltrol Corp.: *See*—
  Fisher, Hardin Y. 3,396,354.
Del Vecchio, George D., and G. H. Perry, to Xerox Corp. Sheet material distribution system. 3,395,913, 8-6-68, Cl. 271—64.
De Mey, Charles F., II, to The Perkin-Elmer Corp. X-Y recorder having single continuous cable drive system. 3,396,-402, 8-6-68, Cl. 346—29.
Demi, Roy C., to Robertshaw Controls Co. Fuel flow control valve. 3,395,887, 8-6-68, Cl. 251—234.
Dempsey, Russell M.: *See*—
  Lyons, Ernest H., Jr., and Dempsey. 3,396,091.
Derfer, John M.: *See*—
  Leavens, Dwight E., and Derfer. 3,396,182.
Dersch, Fritz, and S. L. Paniccia, to GAF Corp. Quinone stabilizers and antifoggants for silver halide emulsions. 3,396,022, 8-6-68, Cl. 96—66.5.
Derwin, Louis A. Washing apparatus. 3,395,412, 8-6-68, Cl. 15—3.
De Smidt, Woodrow A., to Allen-Bradley Co. Switch with two contact pairs. 3,396,255, 8-6-68, Cl. 200—153.
De Soto, Inc.: *See*—
  Sekmakas, Kazys, and Ragas. 3,396,209.
Despota, Angelo F., D. D. Pipkins, and W. W. Henkel, to The Valspar Corp. Method of securing heating elements to ceilings and walls. 3,396,218, 8-6-68, Cl. 264—35.
Deters, Paul C. Drainage tile. 3,395,540, 8-6-68, Cl. 61—10.
Detroit Stoker Co.: *See*—
  Guy, Milton F. 3,395,655.
Deutsche Erdol-Aktiengesellschaft: *See*—
  Lange, Hans, and Schlicht. 3,395,756.
De Vlieg Machine Co.: *See*—
  Sweeny, Allen N. 3,395,496.
Dewsnap, George G., A. George, and L. Heathcote, to Secretary of State for Defense in the Government of the United Kingdom of Great Britain and Northern Ireland. Manufacture of ceramic articles. 3,396,220, 8-6-68, Cl. 264—65.
Diack, Arthur G. Sliding-door latching and locking device. 3,395,490, 8-6-68, Cl. 49—449.
Diamond Shamrock Corp.: *See*—
  Magee, Thomas A. 3,396,225.
Dickerson, Richard T., to The Dow Chemical Co. Copolymers of alkenyl aromatic sulfonic acids with unsaturated monomers and their use as thickeners for non-polar solvents. 3,396,136, 8-6-68, Cl. 260—30.6.
Dickson, Charles A., and W. P. Ter Horst, to Chemetron Corp. Methyl and allyl isocyanate copolymer and process therefor. 3,396,150, 8-6-68, Cl. 260—77.5.
Didic, Radoslav. Ferrite ring core data transmitter. 3,396,373, 8-6-68, Cl. 340—174.
Didycz, William J., to United States Steel Corp. Synthetic production of ammonia. 3,395,982, 8-6-68, Cl. 23—199.
Diebold, Anthony L., to Great Lakes Express Co. Hand truck attachment. 3,395,818, 8-6-68, Cl. 214—372.
Diedrichs, Robert O.: *See*—
  Worden, Donald G. and F. C., Diedrichs, and Trowbridge. 3,395,463.
Diehl, Conrad, to Eastman Kodak Co. Momentary break switch comprising a delay means and/or a shunt connection. 3,396,256, 8-6-68, Cl. 200—160.
Dieruf, Burton E.: *See*—
  Leslie, John C., and Dieruf. 3,395,464.
Dieterle, Horst: *See*—
  Maltner, Wolfgang, and Dieterle. 3,396,311.
Dietrich, Arnold K., to United States of America, Navy. Heat simulator computer. 3,396,267, 8-6-68, Cl. 235—193.
Disman, Richard I.: *See*—
  Ball, David M., and Disman. 3,396,395.
Diversified Engineering Co.: *See*—
  Foster, James M., Jr. 3,395,779.
Dobson, Ian G., and M. J. A. Bass, to Masson Scott Thrissell Engineering Ltd. Sheet feeding apparatus. 3,395,916, 8-6-68, Cl. 271—88.
Dodgen Industries, Inc.: *See*—
  Dodgen, Joe W., Johnson, and Snapp. 3,395,868.
Dodgen, Joe W., K. R. Johnson, and M. D. Snapp, to Dodgen Industries, Inc. Roller mill. 3,395,868, 8-6-68, Cl. 241—86.
Dodson, Richard J., to Clayton Mark & Co. Inside bead trimming apparatus. 3,395,614, 8-6-68, Cl. 90—24.
Dole Valve Co., The: *See*—
  Kolze, Lawrence A., Schaff, and Benedetti. 3,395,885.
Dollear, Frank G.: *See*—
  Yeadon, David A., Rayner, Verburg, Hooper, Dollear, and Dupuy. 3,396,129.
Dominion Engineering Works Ltd.: *See*—
  Harris, Thomas E. 3,395,869.
Donleavy, Thomas J. Nursing device. 3,395,822, 8-6-68, Cl. 215—11.
Donovan, Daniel R. Wireless wingtip lights for rotary wing aircraft. 3,395,875, 8-6-68, Cl. 244—17.11.
Donovan, John C.: *See*—
  Chapman, William P., Smith, and Donovan. 3,396,379.
Dooley, Harry A.: *See*—
  McCrae, John C., and Dooley. 3,396,032.
Doré, John L., Co.: *See*—
  Petrosky, Willard L. 3,395,440.
Dover Corp.: *See*—
  Harwood, Frank S., and Prucha. 3,395,422.
Dow Chemical Co., The: *See*—
  Blackburn, Archie B. 3,396,222.
  Dickerson, Richard T. 3,396,136.
  Huml, James O. 3,396,012.
  Little, Arhur G., and Martin. 3,396,142.
  Moore, William R. 3,396,115.
  Strycker, Stanley J. 3,396,006.
  Strycker, Stanley J. 3,396,007.
  Wharton, Willard H. 3,396,137.
Dowty Hydraulic Units Ltd.: *See*—
  Hodges, John E., Joyner, and Weaver. 3,395,816.
Dowty Mining Equipment Ltd.: *See*—
  Checkley, Peter E., Escott, and Little. 3,396,650.
Dowty Technical Developments Ltd.: *See*—
  Andrews, Thomas D. H. 3,395,948.
Dreiding, Andre S. Plug connector or stopper with a tubular outer component into which a removable inner component is fitted in sealing relationship. 3,395,925, 8-6-68, Cl. 277—168.
Dryden, George S.: *See*—
  Whittaker, Jack D., Loveday, Barbour, Tweedle, and Dryden. 3,395,458.
Du Mond, Robert L.: *See*—
  Klein, Clarence F., and Du Mond. 3,395,673.
Dundon, George S.: *See*—
  McFall, John C., and Dundon. 3,396,027.
Dungan, Straughter H. Compartmented ice chest. 3,395,550, 8-6-68, Cl. 62—400.
Dunlavy, John H., Jr., to Antenna Research Associates, Inc. Small unidirectional antenna array employing spaced electrically isolated antenna elements. 3,396,398, 8-6-68, Cl. 343—814.
Dunlop Co., The: *See*—
  Lautenschlaeger, Friedrich K., and Schwartz. 3,396,175.
Dunlop Rubber Co. Ltd.: *See*—
  Ney, Eric A. 3,396,065.
Dupuy, Harold P.: *See*—
  Yeadon, David A., Rayner, Verburg, Hooper, Dollear, and Dupuy. 3,396,129.
Duthion, Louis, and J. H. Bertin, to Bertin & Cie. Surface effect machine with pressure fluid cushion system. 3,395,-773, 8-6-68, Cl. 180—127.
Duva, Robert, to Sel-Rex Corp. Chemical gold plating composition. 3,396,042, 8-6-68, Cl. 106—1.
Dwyer, Francis B.: *See*—
  Thompson, Richard L., and Dwyer. 3,395,793.
Eakins, Paul W., to Foster Bros. Mfg. Co. Folding sofa bed structure. 3,395,409, 8-6-68, Cl. 5—13.
Earle, Herbert J.: *See*—
  Belote, James M., Churchill, Earle, and Gelman. 3,396,-096.
Eastman Kodak Co.: *See*—
  Bacon, Robert E., and Illingsworth. 3,396,017.
  Beavers, Dorothy J., and Edmonds. 3,396,018.
  Blackman, Robert J. 3,396,281.
  Burness, Donald M., and Wilson. 3,396,127.
  Caldwell, John R. 3,396,151.
  Diehl, Conrad. 3,396,256.
  Guestaux, Claude, and Gallois. 3,396,025.
  Harrington, Robert C., Jr., and Smith. 3,396,144.
  Herzberger, Maximilian J., and McClure. 3,395,962.
  Humphlett, Wilbert J. 3,396,028.
  McFall, John C., and Dundon. 3,396,027.
  Newland, Gordon C., and Tamblyn. 3,396,143.
  Olson, James R. 3,396,016.
  Rees, William W., and Russell. 3,396,023.
  Toney, George P., and Mumpower. 3,396,073.
  Whitmore, Thomas C. 3,396,308.
Easton, Dewey S., to United States of America, Atomic Energy Commission. Method for electro-discharge machining. 3,396,-259, 8-6-68, Cl. 219—69.
Easton & Johnson Ltd.: *See*—
  Whittaker, Jack D., Loveday, Barbour, Tweedle, and Dryden. 3,395,458.
Ebsen, Hans: *See*—
  Scheel, Kurt C., and Ebsen. 3,396,003.
Eckert, Arthur F. J., and D. L. Moorcroft, to Chandler Evans Inc. Plastic control valve and method for making same. 3,395,890, 8-6-68, Cl. 251—333.
Eddy, William R., to Phillips Petroleum Co. Method and apparatus for frictionally fibrillating films. 3,395,525, 8-6-68, Cl. 57—34.
Eden, Jamal S., to The B. F. Goodrich Co. Method for preparing methacrylonitrile and acrylonitrile by catalytic ammoxidation of isobutylene or propylene. 3,396,189, 8-6-68, Cl. 260—465.3.
Edmonds, Guernsey K.: *See*—
  Beavers, Dorothy J., and Edmonds. 3,396,018.
Edmonds, James T., Jr.: *See*—
  Hill, Harold W., Jr., and Edmonds. 3,396,110.
Efros, Magdalena: *See*—
  Kahane, Wilhelm. 3,395,714.
Efros, Norbert: *See*—
  Kahane, Wilhelm. 3,395,714.
Eglit, Barney. Snow ski with porcelain running surface. 3,395,928, 8-6-68, Cl. 280—11.13.
Eklund, Torsten, to Allmanna Svenska Elektriska Aktiebolaget. Vacuum-enclosed rotatable furnace. 3,395,909, 8-6-68, Cl. 266—36.

Electro-Chem Corp.: *See*—
  Crossland, Albert R. 3,395,757.
Electro-Mechanical Instrument Co.: *See*—
  Bartholomew, Albert P., Jr. 3,395,583.
Electro-Nuclear Laboratories, Inc.: *See*—
  Chow, Ken-Tang. 3,396,318.
Elliott, Francis E.: *See*—
  Borg, Tore E., Elliott, and Zysk. 3,396,357.
Ellis, Sidney G.: *See*—
  Webb, James E. 3,396,057.
Elmo Co. Ltd.: *See*—
  Teshi, Haruo, and Sakai. 3,395,965.
Elpac, Inc.: *See*—
  Ballard, Bruce, and Pizer. 3,396,358.
Emerson, Allan R., to Beta Corp. Annunciator system for internal combustion engines with provision for automatic shut down. 3,396,376, 8-6-68, Cl. 340—267.
Emerson, Reginald S. Apparatus for testing the fuel pumps of compression ignition engines. 3,395,575, 8-6-68, Cl. 73—119.
Enders, Heinz, and G. Pusch, to Chemische Fabrik Pfersee G.m.b.H. Process of refining textile materials containing natural and/or regenerated cellulosic fibers. 3,396,050, 8-6-68, Cl. 117—139.4.
Energy Conversion Devices, Inc. *See*—
  Ovshinsky, Stanford R. 3,395,445.
Energy Technology, Inc.: *See*—
  Martin, Cecil G., and Bartley. 3,395,854.
Engel, Henrietta M.: *See*—
  Bernstein, Jack, and Engel. 3,396,159.
Ent-Keller, Anni, to Hans Ent-Keller. Filtering arrangement for smoking articles. 3,395,713, 8-6-68, Cl. 131—10.7.
Ent-Keller, Hans: *See*—
  Ent-Keller, Anni. 3,395,713.
Equipment R. Lague Limitee: *See*—
  Lague, Francois, and Ruel. 3,395,561.
Erb, James W. Permanent wave clip. 3,395,716, 8-6-68, Cl. 132—40.
Erickson, Gerald. Apparatus for packaging containers in container carrier. 3,395,509, 8-6-68, Cl. 53—48.
Erickson, Walter A. Materials separating loader bucket. 3,395,798, 8-6-68, Cl. 209—260.
Erpenbach, Heinz: *See*—
  Sennewald, Kurt, Erpenbach, Vogt, and Joest. 3,396,089.
Escott, John C.: *See*—
  Checkley, Peter E., Escott, and Little. 3,395,650.
Ess, Richard J.: *See*—
  Floyd, Don E., Ess, and Vertnik. 3,396,180.
Esso Research and Engineering Co.: *See*—
  Brasch, Jay. 3,396,183.
  Claybaugh, Billy E., Nickerson, and Powers. 3,396,087.
  Leary, Ralph J., Argabright, and Michael. 3,396,176.
  Nadler, Murray. 3,395,977.
  Taylor, William F., and Sinfelt. 3,396,124.
  Vander Linden, Ronald C., Salva, and Smith. 3,396,173.
Esso Research and Engineering Co.: *See*—
  Winegartner, Edgar C., and Walker. 3,395,973.
Esters, Ernie B Electric motors and generators. 3,396,296, 8-6-68, Cl. 310—266.
Etapharm chem. pharm. Laboratorium Gesellschaft m.b.H.: *See*—
  Biliek, Gerhard. 3,396,081.
Eugen Bauer G.m.b.H.: *See*—
  Haufler, Gerhard, Schnell, and Schweikhardt. 3,395,630.
European Atomic Energy Community (Euratom): *See*—
  Bodnarescu, Musat V. 3,396,077.
  Finzi, Sergio, Faure, and Lebrun. 3,396,079.
Evans, Raymond V.: *See*—
  Hasler, William S., Evans, Dawson, and Parker. 3,395,-432.
Evans, Richard A.: *See*—
  Boyd, Harold C. T., and Evans. 3,395,817.
Evans, Robert L., and S. Sparer, to American Photocopy Equipment Co. Electrostatic copying machine for books and the like. 3,395,610, 8-6-68, Cl. 88—24.
Even, Thomas M., and M. E. Berg, to Harnischfeger Corp. Oscillating arc welding gun. 3,396,263, 8-6-68, Cl. 219—127.
Extrudyne, Inc.: *See*—
  Blau, Arthur A., and Schlackman. 3,395,508.
Eyster, John S.: *See*—
  Nunlist, Erwin J., and Eyster. 3,395,419.
FMC Corp.: *See*—
  Forrest, Tom H. 3,396,102.
Fabri-Tek Inc.: *See*—
  Petry, Eduard C. 3,395,794.
Fabrique d'Horlogerie Chs. Tissot et Fils S.A.: *See*—
  Schneider, Jean-Claude. 3,395,532.
Fairchild Camera and Instrument Corp.: *See*—
  Foster, Herbert R. 3,396,236.
Fall, Edwin B., Jr.: *See*—
  Kraus, Leon S., and Fall. 3,395,800.
Falso, Adolph, to Thor Metal Products Co., Inc. Finned heating unit with side guide rails. 3,395,753, 8-6-68, Cl. 165—55.
Fantl, Joel: *See*—
  Anderson, George J., and Fantl. 3,396,049.
Farbenfabriken Bayer Aktiengesellschaft: *See*—
  Muhlbauer, Ernst, and Weiss. 3,396,174.
Fattori, Lazzaro A. Reel with radial stress absorber. 3,395,-872, 8-6-68, Cl. 242—71.8.
Faught, Sanford L.: *See*—
  Pope, Richard D., Jr., and Faught. 3,395,411.
Faure, Jacques F.: *See*—
  Finzi, Sergio, Faure, and Lebrun. 3,396,079.
Fawkes, Donald G., to Henry Pratt Co. Knurled sleeve connector for spector operator to valve. 3,395,886, 8-6-68, Cl. 251—229.
Fay, James P. Educational device. 3,395,460, 8-6-68, Cl. 35—5.
Feakes, Frank: *See*—
  Brock, Frank J., and Feakes. 3,395,565.
Federal Engineering Co.: *See*—
  Karr, Willis F., and Le Vine. 3,395,648.
Feinberg, Albert E., to Advance Transformer Co. Power circuit for continuous wave magnetron operated by pulsed direct current. 3,396,342, 8-6-68, Cl. 328—262.
Felock, Harold L.: *See*—
  Fisher, James O., Sr., Biddle, and Felock. 3,395,544.
Felder, Walter. Tobacco pipe. 3,395,715, 8-6-68, Cl. 131—184.
Ferguson, Alan C.: *See*—
  Markham, Odell C., and Ferguson. 3,395,881.
Ferguson, Charles W.: *See*—
  Carson, Frank J., Ferguson, Ritter, and Hymore. 3,396,-000.
Fermco, Inc.: *See*—
  Agnew, Norman F. 3,396,370.
Ferranti Ltd.: *See*—
  Good, Richard S. J. 3,396,320.
Ferrara, Peter J., and G. Dalby. Wheat germ and soybean process for extracting glutathione therefrom. 3,396,033, 8-6-68, Cl. 99—80.
Fetter, Neil R., and B. K. W. Bartocha, to United States of America, Navy. Aluminum hydride tetrazole complexes and synthesis thereof. 3,396,170, 8-6-68, Cl. 260—299.
Fieldcrest Mills, Inc.: *See*—
  Rhodes, Carl D. 3,395,738.
Fierstine, Burton A., to Baker Perkins Inc. Centrifuging machine. 3,395,807, 8-6-68, Cl. 210—376.
Finney, James A., Jr., and R. Jablin, ½ to Universal Oil Products Co. and ½ to Bethlehem Steel Corp. Method and means for cooling and cleaning hot converter gases. 3,395,512, 8-6-68, Cl. 55—80.
Finzi, Sergio, J. F. Faure, and J. P. Lebrun, to European Atomic Energy Community (Euratom). Thermal insulation for a internally heated hot tube immersed in a cold liquid. 3,396,079, 8-6-68, Cl. 176—43.
Firestone Tire & Rubber Co., The: *See*—
  Henning, James C. W. 3,396,152.
  Wolf, Burton M., Reber, and Purcell. 3,395,744.
Firma Leonh. Herbert, Maschinenfabrik: *See*—
  Balle, Walter, and Musch. 3,396,221.
Firma Tagers G.m.b.H.: *See*—
  Tappolet, Karl H., and Gerspacher. 3,395,912.
Fishbein, William, and O. E. Rittenbach, to United States of America, Army. CW radar system. 3,396,392, 8-6-68, Cl. 343—14.
Fisher, Hardin Y., to Deltrol Corp. Solenoid with plunger. 3,396,354, 8-6-68, Cl. 335—248.
Fisher, James O., Sr., C. E. Biddle, Sr., and H. L. Felock. Block for bracing ships in drydock. 3,395,544, 8-6-68, Cl. 61—66.
Fisher, Walter, to The Torrington Co. Quick detachable mounting for bearing races. 3,395,956, 8-6-68, Cl. 308—236.
Flores, Eugene P.: *See*—
  Grennberg, Lewis A., Gelman, and Flores. 3,395,664.
Floyd, Don E., R. J. Ess, and L. R. Vertnik, to General Mills, Inc. Polyamide resin compositions of ethylene-diamine and fractionated polymeric fat acids. 3,396,180, 8-6-68, Cl. 260—404.5.
Flygstad, Dean W., to The Telex Corp. Mode of signal responsive hearing aid apparatus. 3,396,245, 8-6-68, Cl. 179—107.
Folgero, Kare: *See*—
  Karlsson, Gosta, and Folgero. 3,396,228.
Folsom, Harold A., Jr.: *See*—
  Dehne, Clarence A., and Folsom. 3,395,651.
Fondi, Claudio: *See*—
  Bartoli, Lanfranco, and Fondi. 3,395,874.
Fong, William: *See*—
  Rawcliffe, Gordon H., and Fong. 3,396,295.
Ford, Lewis M., and D. M. Franklin, to Steelcraft Corp. Flyash removal device for incinerators. 3,395,656, 8-6-68, Cl. 110—18.
Ford, Michael A., and S. F. D. Orr, to Perkin-Elmer Ltd. Synchronized chart recorder. 3,396,403, 8-6-68, Cl. 346—33.
Ford Motor Co.: *See*—
  Kaptur, Robert E. 3,395,617.
Forges et Akteliers de la Nave, and Etudes et Recherches Industrielles et Scientifiques E.R.I.S.: *See*—
  Deloffre, Leon E. 3,395,542.
Forman, Robert L., and P. Hill, to Imperial Chemical Industries Ltd. Plastic compositons. 3,396,133, 8-6-68, Cl. 260—28.5.
Formax Mfg. Corp.: *See*—
  Matouka, Nicholas. 3,395,417.
Forrest, Tom H., to FMC Corp. Sewage treatment process and apparatus. 3,396,102, 8-6-68, Cl. 210—7.
Fortuna-Werke Spezialmaschinenfabrik AG.: *See*—
  Braun, Dieter, and Rudinger. 3,395,595.
Foster Bros. Mfg. Co.: *See*—
  Eakins, Paul W. 3,395,409.
Foster, Harley B. Method of forming and firing a ceramic mass. 3,396,217, 8-6-68, Cl. 264—27.
Foster, Herbert R., to Fairchild Camera and Instrument Corp. Automatic black-level control circuit. 3,396,236, 8-6-68, Cl. 178—7.1.
Foster, James M., Jr., to R. Lee Fraser d/b/a Diversified Engineering Co. Wheel stopping device. 3,395,779, 8-6-68, Cl. 188—32.
Foster, Keith, to National Research Development Corp. Method of and apparatus for transmitting energy by pressure oscillations in a fluid. 3,395,536, 8-6-68, Cl. 60—54.5.
Foster, Stephen F., and J. F. Hamilton, to Hercules, Inc. Explosive container. 3,395,642, 8-6-68, Cl. 102—24.

Fowell, Andrew J., to American Standard Inc. Baseboard heat exchanger apparatus. 3,395,752, 8-6-68, Cl. 165—55.
Fowlkes, Anne M. Dog restraining device. 3,395,675, 8-6-68, Cl. 119—120.
Fox River Tractor Co.: *See*—
Sousek, Eugene A., and Witt. 3,395,866.
Francis, Frank P. G., and G. V. Watts, to British Hovercraft Corp. Ltd. Flexible skirts for air cushion borne vehicles. 3,395,772, 8-6-68, Cl. 180—127.
Franklin, David M.: *See*—
Ford, Lewis M., and Franklin. 3,395,656.
Franz, Maurice F.: *See*—
Medley, Jackson C., Smith, and Franz. 3,395,946.
Fraser, R. Lee: *See*—
Foster, James M., Jr. 3,395,779.
Fredd, John V., to Otis Engineering Corp. Operator devices. 3,395,618, 8-6-68, Cl. 92—24.
Freedman, Louis, and A. J. Merritt, to U.S. Vitamin & Pharmaceutical Corp. Halogenated cis-cinnamic acids. 3,396,193, 8-6-68, Cl. 260—521.
Freier, Walter J., to V-M Corp. Record player adapter. 3,395,919, 8-6-68, Cl. 274—39.
French, Philip D. Heat transfer devices and method of manufacture. 3,395,754, 8-6-68, Cl. 165—185.
Frey, Christian. Compression modular building. 3,395,502, 8-6-68, Cl. 52—73.
Frey, Max, and A. W. Keene. Power operated syringe. 3,395,704, 8-6-68, Cl. 128—218.
Friendship, Kenneth F., to Geo. J. Meyer Mfg. Co. Carbonated beverage stabilizer and bottle filling method. 3,395,739, 8-6-68, Cl. 141—6.
Frits, Bode Mechanische Bouwmaterialen N.V.: *See*—
Van Bergen, Adrianus A. 3,395,488.
Fritts, Russell A., to The Singer Co. Quick release device for presser mechanism of a sewing machine. 3,395,662, 8-6-68, Cl. 112—235.
Frost, H., & Co. Ltd.: *See*—
Moss, Arthur W. 3,395,475.
Moss, Arthur W., and Gardiner. 3,395,476.
Frost, Nelson A. Remotely controlled tunnel exploration and destroying means. 3,395,641, 8-6-68, Cl. 102—19.
Fruetel, John A. Spare tire holder for vehicles. 3,395,819, 8-6-68, Cl. 214—451.
Frush, John P. Artifical teeth. 3,395,453, 8-6-68, Cl. 32—2.
Fuerst, Edwin W., and R. B. Mason, to Monsanto Co. Hollow article having an attractive, optical appearance. 3,395,821, 8-6-68, Cl. 215—1.
Fujioka, Yasunari: *See*—
Matumoto, Katumi, Iwai, and Fujioka. 3,396,128.
Funk, William E., and I. H. Lehman. Apparatus for treating soil. 3,395,896, 8-6-68, Cl. 259—96.
Furbeck, Warren R.: *See*—
Lee, Charles A., and Furbeck. 3,395,658.
GAF Corp.: *See*—
Dersch, Fritz, and Paniccia. 3,396,022.
Smith, Richard E. 3,395,631.
Gallagher, Cornelius A., to Servo Corp. of America. Railroad-wheel operated control-signal generator. 3,396,271, 8-6-68, Cl. 246—249.
Gallois, Daniel: *See*—
Guestaux, Claude, and Gallois. 3,396,025.
Galloway, Elizabeth H. Toy for forming bubbles. 3,395,481, 8-6-68, Cl. 46—6.
Gambill, Ulysses T., and W. R. Thomas, to Owens-Corning Fiberglas Corp. Automobile headliner. 3,396,070, 8-6-68, Cl. 161—119.
Garangiotis, Panagiotis M. Game apparatus with a game board, marbles and cards. 3,395,922, 8-6-68, Cl. 273—134.
Gardiner, Ernest E.: *See*—
Moss, Arthur W., and Gardiner. 3,395,476.
Gardner, Weldon J., to Vesuvius Crucible Co. Nozzle for a bottom pour ladle for molten metal. 3,395,840, 8-6-68, Cl. 222—566.
Garfunkel, James H., and G. W. Spence, to Honeywell Inc. Radiation detecting apparatus with self-check. 3,396,386, 8-6-68, Cl. 340—409.
Garis, Gordon O., and R. F. Roettger, to Raygo, Inc. Soil compacting machine. 3,395,626, 8-6-68, Cl. 94—50.
Gartner, Henry C., to Acme Process Equipment Co. Lauter tub. 3,395,635, 8-6-68, Cl. 99—275.
Gaynor, James W.: *See*—
Vienna, Paul C., Plemich, and Gaynor. 3,396,114.
Geier, George, to Keuffel & Esser Co. Star and sky simulator. 3,395,607, 8-6-68, Cl. 88—14.
Geigy Chemical Corp.: *See*—
Hook, Wilfred H., and Green. 3,396,163.
Gelin, Robert J. J., to Societe Industrielle de Mecanique Appliquee S.I.G.M.A. Hydraulic gear pumps and motors. 3,395,646, 8-6-68, Cl. 103—126.
Gelman, Charles: *See*—
Belote, James M., Churchill, Earle, and Gelman. 3,396,096.
Gelman, Ellis D.: *See*—
Grennberg, Lewis A., Gelman, Flores, and Dubnoff. 3,395,664.
Gelman Instrument Co.: *See*—
Belote, James M., Churchill, Earle, and Gelman. 3,396,096.
Gem, Inc.: *See*—
Malmo, John R. 3,395,418.
General Body Sales Corp.: *See*—
Hoyerman, William H. 3,395,937.
General Dynamics Corp.: *See*—
Sinclair, Neil A. 3,395,572.
General Electric Co.: *See*—
Anderson, Harry C. 3,396,231.
Barnes, Robert G. 3,395,510.
Blair, Ronald A. 3,395,594.
Boothe, Willis A., and Lanza. 3,395,719.
Borel, Ronald F., and Lee. 3,395,538.
Borg, Tore E., Elliott, and Zysk. 3,396,357.
Bristow, Robert H. 3,395,993.
Burge, Joseph C., and Beal. 3,395,891.
Campbell, John H. 3,396,307.
Datta, Ranajit K. 3,396,118.
Davis, Myron, and Carlson. 3,395,444.
Gruenwald, Geza. 3,396,145.
Hummel, Wiley M. 3,395,452.
Jacobson, Chester F. 3,396,265.
Lyons, Ernest H., Jr., and Dempsey. 3,396,091.
Owen, Louis L. 3,395,534.
Polinko, George, Jr. 3,395,443.
Schafer, Halvert. 3,395,979.
Schmukler, Seymour. 3,396,146.
Shumard, Kermit J., and McDonald. 3,395,924.
Strout, Frederick D. 3,396,377.
Trocki, Thomas, and Olich. 3,395,781.
Von Fange, Eugene K. 3,396,341.
Whipple, Richard E. 3,396,356.
General Mills, Inc.: *See*—
Floyd, Don E., Ess, and Vertnik. 3,396,180.
General Motors Corp.: *See*—
Treloar, Ronald C. 3,396,385.
General Precision System Inc.: *See*—
Keith, George E., Jr. 3,396,378.
General Research, Inc.: *See*—
Rosema, Thomas J. 3,395,786.
General Systems Inc.: *See*—
Buchanan, James L., and Zelina. 3,396,338.
George, Ambrose: *See*—
Dewsnap, George G., George, and Heathcote. 3,396,220.
George, Donald K.: *See*—
Hervey, Laurence R. B., and George. 3,395,708.
George, Raymond S., and R. K. Rohwer, to United States of America, Atomic Energy Commission. Preparation of 2,4,6-trichloronitrobenzene. 3,396,200, 8-6-68, Cl. 260—646.
George, Robert A. Anchor device. 3,395,668, 8-6-68, Cl. 114—206.
Gerhard, Helmut. Liquid container composed of square and/or rectangular plates. 3,395,824, 8-6-68, Cl. 220—5.
Gerspacher, Alfred: *See*—
Tappolet, Karl H., and Gerspacher. 3,395,912.
Gersten, Milton, to Orbit Instrument Corp. Motion converting apparatus. 3,395,589, 8-6-68, Cl. 74—471.
Giammanco, Rosario P., to National Research Corp. Process of growing silicon carbide P-N junction electroluminescing diode using a modified travelling solvent method. 3,396,059, 8-6-68, Cl. 148—171.
Giammarco, Giuseppe, to Montecatini Edison S.p.A., and to Vetrocoke Societa per Azioni. Method of removing alkali metal from a solution thereof containing alkali metal arsenite and alkali metal carbonate. 3,395,978, 8-6-68, Cl. 23—53.
Gibson, Paul: *See*—
Bell, Richard J., Campbell, Gibson, and Sims. 3,396,037.
Gilbert, Everett E., to Allied Chemical Corp. Method of controlling insect pests with dihydric fluoroalcohols. 3,396,227, 8-6-68, Cl. 424—343.
Gilbert, Jack J., to Bernard Frank. Pressing irons. 3,395,469, 8-6-68, Cl. 38—69.
Gilgore, William H.: *See*—
Messerly, Gary A., Royer, and Gilgore. 3,395,653.
Gill, Truman F. Lure container with self-contained tension retained closure. 3,395,788, 8-6-68, Cl. 206—45.34.
Gillam, Edward D., to Comly-Gillam Carton Corp. Sliding tray packages. 3,395,849, 8-6-68, Cl. 229—19.
Ginther, Robert J., to United States of America, Navy. Thermoluminescent glass and method of preparing the same. 3,396,120, 8-6-68, Cl. 252—301.4.
Glemser, Oskar, and A. von Baeckmann; said von Baeckmann assor. to said Glemser. Process for the separation of zirconium from hafnium. 3,395,976, 8-6-68, Cl. 23—22.
Glicksman, Maurice, and M. C. Steele, to Radio Corp. of America. Semiconductor devices and circuits using the pinch effect. 3,396,283, 8-6-68, Cl. 307—309.
Glinka, Carl. Method and apparatus for treating solid fuels and petroleum oils. 3,396,099, 8-6-68, Cl. 208—107.
Globe Tool and Engineering Co., The: *See*—
Moore, Harry W. 3,395,448.
Moore, Harry W. 3,395,449.
Goldie, Harry, to Westinghouse Electric Corp. High power radar system with fail-safe receiver protection. 3,396,388, 8-6-68, Cl. 343—5.
Gomery, Michael: *See*—
Brothman, Abraham, Gomery, Miller, and Horowitz. 3,396,369.
Gonnard, Francois L. G., to Baraclem S.A. Electric storage batteries. 3,396,056, 8-6-68, Cl. 136—6.
Good, Richard S. J., to Ferranti Ltd. Apparatus for measuring the movement of a cyclic wave pattern with respect to a reference structure and for controlling that movement. 3,396,320, 8-6-68, Cl. 318—18.
Goodrich, B. F., Co., The: *See*—
Bayliff, Robert, Le Blanc, and Sidles. 3,395,879.
Eden, Jamal S. 3,396,189.
Goodwin, Laurence: *See*—
Cross, John D., and Goodwin. 3,395,726.
Goodyear Aerospace Corp.: *See*—
Kelly, Charles M., and Raffel. 3,396,400.
Goodyear Tire & Rubber Co., The: *See*—
Ray, Daniel D. 3,395,529.
Wolfe, Merritt W. 3,396,072.

Gordon, William A., to United States of America, National Aeronautics and Space Administration. Arc electrode of graphite with ball tip. 3,396,303, 8-6-68, Cl. 313—352.
Gorski, Henry J.: *See*—
Peters, Robert W. 3,396,290.
Gosselin, Charles M.: *See*—
Bryant, Paul J., and Gosselin. 3,395,997.
Gould, Herbert E., to Northwest Olivine Co. Slag conditioner. 3,396,010, 8-6-68, Cl. 75—30.
Gozlan, Albert, to Nord-Aviation Societe Nationale de Constructions Aeronautiques. Combined turbo-jet and ram-jet engine with injection of oxygen. 3,395,539, 8-6-68, Cl. 60—244.
Grace, W. R., & Co.: *See*—
Laskin, Maurie. 3,396,041.
Legal, Casimer C., Jr., and Richmond. 3,396,004.
Grad, Peter P., to Rotron Mfg. Co., Inc. Method of manufacturing hydrodynamic lubrication bearings. 3,395,437, 8-6-68, Cl. 29—149.5.
Grant, Harry C., Jr., to Walter Kidde & Co., Inc. Supervised apparatus for detecting suspended matter in fluids. 3,396,387, 8-6-68, Cl. 340—410.
Granville, Edward, to United States Steel Corp. Posthole digger. 3,395,766, 8-6-68, Cl. 173—23.
Graser, Earl J., to Olinkraft, Inc. Automatically adjustable lock device. 3,395,791, 8-6-68, Cl. 206—65.
Great Lakes Express Co.: *See*—
Diebold, Anthony L. 3,395,818.
Greathouse, Walton D.: *See*—
Spencer, John R., and Greathouse. 3,395,858.
Grebe, Konrad. Hydraulic propping apparatus with automatic overload protection means. 3,395,619, 8-6-68, Cl. 92—51.
Grebel, Grant, and R. J. Kinnavy, to Sta-Rite Products, Inc. Motor pump unit. 3,395,644, 8-6-68, Cl. 103—87.
Greber, Henry. Electronic tube with evaporation-proof cathode and electromagnetic electrostatic and heated grids controls. 3,396,302, 8-6-68, Cl. 313—300.
Green, Jack R.: *See*—
Hook, Wilfred H., and Green. 3,396,163.
Green, Jacob B. Aircraft with housed counter rotating propellors. 3,395,876, 8-6-68, Cl. 244—23.
Greenbank Engineering Co. Ltd.: *See*—
Whittaker, Jack D., Loveday, Barbour, Tweedle, and Dryden. 3,395,458.
Greenburg, Jesse J., and W. R. Barrett. Spring mounted adjustable boom construction. 3,395,503, 8-6-68, Cl. 52—114.
Greene, Phillip A., to Allied Chemical Corp. Process for preserving aqueous formaldehyde solutions. 3,396,196, 8-6-68, Cl. 260—606.
Greenhut, Joseph. Centrifugal speed-responsive device with contra-directional spring-loading arms acting upon a non-compressible spring. 3,396,251, 8-6-68, Cl. 200—80.
Gremion, Robert, to Societe le Carbone-Lorraine. Method and apparatus for metallic impregnation of carbon and graphite. 3,396,054, 8-6-68, Cl. 117—227.
Grennberg, Lewis A., E. D. Gelman, E. P. Flores, and E. M. Dubnoff. Tetrahedron sailing vehicle. 3,395,664, 8-6-68, Cl. 114—39.
Grey, Gordon E., to Sperry Rand Corp. Bale wagon. 3,395,814, 8-6-68, Cl. 214—6.
Grimes, Eldon L., to Marine Construction & Design Co. Process and apparatus for quick freezing of food bodies. 3,395,549, 8-6-68, Cl. 62—63.
Grimes, Warren R., and J. H. Shaffer, to United States of America, Atomic Energy Commission. Recovery of protactinium from molten fluoride salts. 3,395,991, 8-6-68, Cl. 23—325.
Grothjan, Jerome R.: *See*—
Belcher, Samuel L., Biglin, and Grothjan. 3,395,826.
Gruber, Bernard A., to Monsanto Co. Process for the production of boron phosphide. 3,395,986, 8-6-68, Cl. 23—204.
Gruenwald, Geza, to General Electric Co. Compositions of epoxy resin, lactam and aliphatic polycarboxylic material. 3,396,145, 8-6-68, Cl. 260—47.
Grundig E.M.V. Elektro-Mechanische Versuchsanstalt Inh. Max Grundig: *See*—
Wagner, Richard. 3,396,393.
Grunig, James K., W. C. Aitkenhead, and W. B. Davis, to The Anaconda Co. Precipitation of beryllium from ores. 3,395,975, 8-6-68, Cl. 23—18.
Guano-Werke Aktiengesellschaft (vormals Ohlendorff'sche und Merck'sche Werke): *See*—
Scheel, Kurt C., and Ebsen. 3,396,003.
Guestaux, Claude, and D. Gallois, to Eastman Kodak Co. Photosensitive products for preparing gravure resists. 3,396,025, 8-6-68, Cl. 96—83.
Gulf Research & Development Co.: *See*—
Neighbors, Ralph P. 3,396,009.
Gullick Ltd.: *See*—
Lubojatsky, Walter. 3,395,616.
Gunder, Gottfried E., to SKF Industries, Inc. Seal for bearing. 3,395,926, 8-6-68, Cl. 277—235.
Gurley, Jesse F., Jr., E. F. Harp, and E. L. Reichard, to Mobay Chemical Co. Polyurethanes. 3,396,126, 8-6-68, Cl. 260—2.5.
Guy, Milton F, to Detroit Stoker Co. Incinerator construction. 3,395,655, 8-6-68, Cl. 110—15.
Haas, Howard C., to Polaroid Corp. Photographic silver halide emulsions. 3,396,030, 8-6-68, Cl. 96—114.
Hamel, William J., to Union Carbide Corp. Piercing valve. 3,395,724, 8-6-68, Cl. 137—318.
Hamilton, Donald A., to American Hospital Supply Corp. Medical suction apparatus. 3,395,705, 8-6-68, Cl. 128—276.
Hamilton, John F.: *See*—
Foster, Stephen F., and Hamilton. 3,395,642.
Hamilton, Robert W.: *See*—
Burham, Francis P., and Hamilton. 3,395,674.
Hammond, Earl J., to Houdaille Industries, Inc. Tool holder and tool assembly. 3,395,927, 8-6-68, Cl. 279—51.
Hamrin, Charles E., Jr., to United States of America, Atomic Energy Commission. Tungsten-rhenium coated ceramic reactor fuel particles. 3,396,080, 8-6-68, Cl. 176—67.
Handford, Brian O.: *See*—
Young, Geoffrey T., and Handford. 3,396,157.
Hanna, Elias G.: *See*—
Cunningham, James A., and Hanna. 3,396,312.
Harada, Kazuya: *See*—
Yumoto, Hirosuke, Harada, and Itoga. 3,396,216.
Hardin, William W., and J. J. Kennedy, to International Business Machines Corp. Direction detector for flying spot scanner with digital indicator therefor. 3,396,276, 8-6-68, Cl. 250—202.
Hardison, Leslie C., to Universal Oil Products Co. Method of cleaning and purifying particle laden discharge streams. 3,395,972, 8-6-68, Cl. 23—4.
Harkness, Joseph R., to Briggs & Stratton Corp. Automatic starter for small engines. 3,395,687, 8-6-68, Cl. 123—179.
Harless, Charles L., Jr. Lobster and crab claw shell cracking tool. 3,395,421, 8-6-68, Cl. 17—7.
Harnischfeger Corp.: *See*—
Even, Thomas M., and Berg. 3,396,263.
Harp, Emile F.: *See*—
Gurley, Jesse F., Jr., Harp, and Reichard. 3,396,126.
Harrington, Robert C., Jr., and J. L. Smith, to Eastman Kodak Co. Ultraviolet light stabilized halogenated synthetic resins containing zinc salts of phosphorus compounds. 3,396,144 8-6-68, Cl. 260—45.75.
Harris, Thomas E., to Dominion Engineering Works Ltd. Structure for large diameter grinding mill. 3,395,869, 8-6-68, Cl. 241—176.
Harris, William B., to Bell Telephone Laboratories Inc. Variable width pulse generator. 3,396,293, 8-6-68, Cl. 307—268.
Harsco Corp.: *See*—
Davidson, Frederic A., Jr., and Schalge. 3,395,501.
Harvey, Earle M., to United States of America, Army. Rifle mounted auxiliary firearm and multiprojectile cartridge therefor. 3,395,478, 8-6-68, Cl. 42—1.
Harvey, G. A., & Co. (London) Ltd.: *See*—
Clayton, James H. 3,395,805.
Harwood, Frank S., and C. T. Prucha, to Dover Corp. Door toe guide. 3,395,422, 8-6-68, Cl. 16—93.
Hasler, William S., R. V. Evans, P. H. T. Dawson, and W. Parker, to Singer-Cobble Ltd. Apparatus for producing a textile fabric. 3,395,432, 8-6-68, Cl. 28—1.
Haufler, Gerhard, A. Schnell, and F. Schweikhardt, to Eugen Bauer G.m.b.H. Camera for use with artificial-light film. 3,395,630, 8-6-68, Cl. 95—11.
Haug, Arne, to Norsk Institute For Tang-Og Tareforskning. Preparation of alginic acid by extraction of algae. 3,396,158, 8-6-68, Cl. 260—209.6.
Hauni-Werke Koerber and Co. K.G.: *See*—
Kochalski, Horst. 3,395,570.
Hauser, Herbert J., Jr., to American Air Filter Co., Inc. Power transmitting flexible coupling. 3,395,552, 8-6-68, Cl. 64—11.
Haw, Sherwood G., to The Banister Corp. Magnetic separation method and construction. 3,395,797, 8-6-68, Cl. 209—214.
Hayasaka, Enakichi. Infinitely variable speed drive. 3,396,289, 8-6-68, Cl. 310—92.
Hazeltine Research, Inc.: *See*—
Aitken, Robert K. 3,396,381.
Hearn, Daniel P., to Sinclair Research, Inc. Geophysical gradiometer including means for determining spacing between airborne bodies. 3,396,334, 8-6-68, Cl. 324—43.
Heathcote, Leonard: *See*—
Dewsnap, George G., George, and Heathcote. 3,396,220.
Hebert, Emile: *See*—
Sheng, Alfredo, and Hebert. 3,396,282.
Hechenbleikner, Ingenuin, R. S. Dalter, and J. F. Hussar, to Carlisle Chemical Works, Inc. Polymeric organo tin mercaptides and carboxylates and the preparation thereof. 3,396,185, 8-6-68, Cl. 260—429.7.
Hecker, Arthur C.: *See*—
Leistner, William E., and Hecker. 3,396,130.
Hedden, Walter A., D. J. Bowers, and B. W. King, Jr., to Vitreous Steel Products Co. Radiant heating panels and resistive compositions for the same. 3,396,055, 8-6-68, Cl. 117—227.
Hedelin, Sven. Vibrators. 3,395,894, 8-6-68, Cl. 259—1.
Heidler, Josef: *See*—
Schramm, Paul, Schneider, and Heidler. 3,395,541.
Heinen, Hans, to Agfa-Gevaert Aktiengesellschaft. Film advancing mechanism. 3,395,842, 8-6-68, Cl. 226—62.
Heinrich Maltner G.m.b.H.: *See*—
Maltner, Wolfgang, and Dieterle. 3,396,311.
Heinrich, Willi, to Woma Apparatebau Wolfgang Maasberg & Co. G.m.b.H. Control valve for high-pressure pumps and the like. 3,395,722, 8-6-68, Cl. 137—108.
Heller, William C., Jr.: *See*—
Leatherman, Alfred F 3,396,258.
Hellmers, Henry D.: *See*—
Wiseman, James V., and Hellmers. 3,395,906.
Hellmig, Ehrhard, and F. Moll, to Agfa Aktiengesellschaft. Photographic silver halide multilayer material for correcting inadequate contrast. 3,396,024, 8-6-68, Cl. 96—69.
Hendrickson, Melvin C., and G. V. Morris, to Zenith Radio Corp. Interrogating system for subscription television receivers. 3,396,232, 8-6-68, Cl. 178—5.1.
Henkel, William W.: *See*—
Despota, Angelo F., Pipkins, and Henkel. 3,396,218.
Henning, James C. W., to The Firestone Tire & Rubber Co. Process of curing an acrylic elastomer. 3,396,152, 8-6-68, Cl. 260—79.5.

Heny, Steve: *See*—
Anderson, James W., Heny, and Joyner. 3,396,286.
Herbenar, Edward J., to TRW, Inc. Method of spin swedging inserts in housings. 3,395,441, 8-6-68, Cl. 29—441.
Herbenar, Edward J., to TRW, Inc. Method for preloading and retaining components in a housing. 3,395,442, 8-6-68, Cl. 29—441.
Hercules, Inc.: *See*—
Foster, Stephen F., and Hamilton. 3,395,642.
Hervey, Laurence R. B., and D. K. George, to Riegel Textile Corp. Method for improving a fluffed fibrous wood pulp batt for use in sanitary products and the products thereof. 3,395,708, 8-6-68, Cl. 128—284.
Herzberger, Maximilian J., and N. R. McClure, to Eastman Kodak Co. Superachromatic objective. 3,395,962, 8-6-68, Cl. 350—215.
Hess, Ralph A., to SW Industries, Inc. Contruction of roll for machinery. 3,395,636, 8-6-68, Cl. 100—93.
Hess, Walter, to Schloemann Aktiengesellschaft. Means for moving the chill-mould in continuous casting plant. 3,395,751, 8-6-68, Cl. 164—260.
Hester, Jackson B., Jr., to The Upjohn Co. 2-oxo-4-(indol-3-yl)-hexahydro-1H-azepines and process for their preparation. 3,396,160, 8-6-68, Cl. 260—239.3.
Hewlett-Packard Co.: *See*—
Ackerman, Marvin. 3,395,963.
Hickman, Henry. Magnetic padlock. 3,395,555, 8-6-68, Cl. 70—39.
Higgins, Charles R.: *See*—
Whalen, John G., and Higgins. 3,395,707.
Higgins, Charles R., and J. G. Whalen, to The Kendall Co. No-sew, no-fold diaper. 3,395,706, 8-6-68, Cl. 128—284.
Hill, Harold W., Jr., and J. T. Edmonds, Jr., to Phillips Petroleum Co. Lubricant comprising sulfur-containing polymer. 3,396,110, 8-6-68, Cl. 252—42.
Hill, Harvey J., and E. F. Prater, to Roberts Consolidated Industries, Inc. Two-piece carpet gripper and binder. 3,395,420, 8-6-68, Cl. 16—16.
Hill, Peter: *See*—
Forman, Robert L., and Hill. 3,396,133.
Hill, William A., to Producers Chemical Co. Composition for fracturing process. 3,396,107, 8-6-68, Cl. 252—8.55.
Himmelmann, Wolfgang, A. Riebel, and E. A. Muller, to Agfa Aktiengesellschaft. Hardening of photographic protein-containing layers by acrolein polymers containing carboxylic groups. 3,396,029, 8-6-68, Cl. 96—111.
Hipp, Allen J.: *See*—
Manton, Jean P., Hipp, and Davies. 3,396,098.
Hittinger, Earl J., to Standard Oil Co. Process for the preparation of a propellant grain. 3,396,215, 8-6-68, Cl. 264—3.
Hjorth, Bo, to North American Philips Co., Inc. Photoelectric length measurement using coarse and fine photocells. 3,396,278, 8-6-68, Cl. 250—219.
Ho, Hin H., J. A. Sherrington, and J. B. Vousden, to S. Smith & Sons (England) Ltd. Odometer system for vehicles employing a frequency divider. 3,396,333, 8-6-68, Cl. 324—70.
Hobson, H. M., Ltd.: *See*—
Westbury, Roy. 3,395,878.
Hochart, Bernard, and P. Burnier, to Societe Generale de Constructions Electriques et Mecaniques (Alsthom). Cooled hydrogen or neon used as transformer dielectric. 3,396,355, 8-6-68, Cl. 336—58.
Hodges, John E., P. G. Joyner, and C. D. Weaver, to Dowty Hydraulic Units Ltd. Hydraulically-operated mechanisms suitable for use in digging machines. 3,395,816, 8-6-68, Cl. 214—138.
Hoeppel, Raymond W. Stable transistor audio oscillator. 3,396,987, 8-6-68, Cl. 331—117.
Hoerner Waldorf Corp.: *See*—
Johnson, Ronald V. 3,395,848.
Hoffman, John A. Aerodynamically feathered helicopter rotor. 3,395,760, 8-6-68, Cl. 170—135.4.
Hoffman, Paul: *See*—
Corson, Carl R., and Hoffman. 3,396,314.
Hoffman-La Roche Inc.: *See*—
Cavalli, Arnold, and Magid. 3,396,226.
Hoffmann, Reuben F., to U.S. Plywood-Champion Papers Inc. Continuous laminating method and apparatus. 3,396,064, 8-6-68, Cl. 156—335.
Hofmann, Wilfried: *See*—
Deeg, Karl, and Hofmann. 3,395,473.
Winkler, Alfred, Hofmann, and Deeg. 3,395,474.
Hogan, William J., to Ritter Pfaudler Corp. Mechanism for simultaneously tilting and raising a patient X-ray table. 3,396,274, 8-6-68, Cl. 250—55.
Holcomb, Joseph C.: *See*—
Menges, Jacob T. 3,395,859.
Holmes, Ronald L. W., to Union Carbide Corp. Metallurgical tuyere. 3,395,910, 8-6-68, Cl. 266—41.
Holzer, Walter. Fan. 3,395,761, 8-6-68, Cl. 170—160.5.
Honeywell Inc.: *See*—
Abbey, Charles R., Pursel, and Scidmore. 3,396,240.
Garfunkel, James H., and Spence. 3,396,386.
Mobarry, John W., and Warren. 3,395,968.
Prosen, Richard J. 3,396,047.
Ready, John F. 3,395,961.
Taylor, John C. 3,395,615.
Hook, Wilfred H., and J. R. Green, to Geigy Chemical Corp. Derivatives of 5-nitro-2-furaldehyde. 3,396,163, 8-6-68, Cl. 260—240.
Hooker Chemical Corp.: *See*—
Weil, Edward D., and Porter. 3,396,201.
Hooper, Lucien L., Jr.: *See*—
Yeadon, David A., Rayner, Verburg, Hooper, Dollear, and Dupuy. 3,396,129.
Hopkins, Ralph E. Voltage control of permanent magnet generators. 3,396,325, 8-6-68, Cl. 322—46.
Horning, Frederick G.: *See*—
Young, William G., and Horning. 3,395,940.
Young, William G., Horning, and Carothers. 3,395,941.
Horowitz, Lee: *See*—
Brothman, Abraham, Gomery, Miller, and Horowitz. 3,396,369.
Horton, William H., to Piezo Technology Inc. Crystal structures and method of fabricating them. 3,396,287, 8-6-68, Cl. 310—9.1.
Hosemann, Rolf, and G. Basler. Deflected wire electrometer having an auxiliary electrode for improved sensitivity. 3,396,337, 8-6-68, Cl. 324—109.
Hoskins, Raymond H.: *See*—
Maiman, Theodore H., Hoskins, Soffer, Pastor, and Pearson. 3,396,119.
Hospes, Richard, to Julius Aderer, Inc. Dispenser for dental ingots. 3,395,958, 8-6-68, Cl. 312—61.
Houdaille Industries, Inc.: *See*—
Hammond, Earl J. 3,395,927.
Houghton, E. F., & Co.: *See*—
Smith, Robert K., and Barber. 3,396,111.
Houk, Richard D., to Morse Controls Inc. Vernier control with automatic release. 3,395,592, 8-6-68, Cl. 74—502.
Hoyerman, William H., to General Body Sales Corp. Truck assembly. 3,395,937, 8-6-68, Cl. 296—28.
Hoyle, Homer. Steering apparatus for trailers. 3,395,929, 8-6-68, Cl. 280—81.
Hsieh, Henry L.: *See*—
Wofford, Clinton F., Busler, and Hsieh. 3,396,125.
Hughes, Martin R., to Bissell, Inc. Mop with reversible disposable pad. 3,395,416, 8-6-68, Cl. 15—228.
Huml, James O., to The Dow Chemical Co. Recovery of silicon from alloys thereof and from silicon sulfides. 3,396,012, 8-6-68, Cl. 75—62.
Hummel, Wiley M., to General Electric Co. Methods of terminating electrical devices. 3,395,452, 8-6-68, Cl. 29—621.
Humphlett, Wilbert J., to Eastman Kodak Co. Silver halide emulsions containing hydroxy carboxylic acid derivatives as fog inhibitors. 3,396,028, 8-6-68, Cl. 96—109.
Huntingdon Inc.: *See*—
Ullman, John E. 3,395,694.
Hunington, Morgan G., to Waterdrink, Inc. Method and apparatus for mounting membrane filters on tubular supports without laterally stressing the active surface. 3,396,103, 8-6-68, Cl. 210—23.
Hupp Corp.: *See*—
Smith, Horace L., Jr. 3,395,634.
Hussar, John F.: *See*—
Hechenbleikner, Ingenuin, Dalter, and Hussar. 3,396,185.
Huynh, Chanh: *See*—
Martel, Jacques, Toromanoff, and Huynh. 3,396,188.
Ideal Security Hardware Corp.: *See*—
Waldo, Russell W. 3,395,556.
Ideal Toy Corp.: *See*—
Moe, Walter. 3,395,920.
Illingsworth, Bernard D.: *See*—
Bacon, Robert E., and Illingsworth. 3,396,017.
Imperial Chemical Industries Ltd.: *See*—
Couzens, Peter J. 3,396,071.
Forman, Robert L., and Hill. 3,396,133.
Macmillan, Richard B., and Lewis. 3,396,131.
Impola, Clarence N.: *See*—
McKillip, William J., and Impola. 3,396,210.
Industrial Nucleonics Corp.: *See*—
Martin, Philip T., and Tompos. 3,396,275.
Sutterfield, Gerald T., and Emberg. 3,396,219.
Institut Francais du Petrole des Carburants et Lubrifiants: *See*—
Karr, Claude. 3,395,967.
Institut de Recherches de la Siderurgie Francaise: *See*—
Trentini, Bernard. 3,396,011.
Interlake Steel Corp.: *See*—
Keyser, Naaman H. 3,396,014.
International Business Machines Corp.: *See*—
Calvert, James D. 3,396,372.
Chang, Paul P., and Kosanke. 3,395,960.
Hardin, William W., and Kennedy. 3,396,276.
Max, Erhard, and Sincerbox. 3,396,266.
Waldecker, Donald E. 3,396,371.
Wilson, Melvin G. 3,396,304.
International Environmental Dynamics: *See*—
Contevita, John. 3,396,502.
International Harvester Co.: *See*—
Morgan, Jerry E. 3,395,930.
Moyer, Donald W., Swanson, and Lam. 3,395,771.
Riley, Robert M. 3,395,690.
International Minerals & Chemical Corp.: *See*—
Dancy, William B. 3,395,980.
International Nickel Co., The: *See*—
Mihalisin, John R. 3,396,013.
International Rectifier Corp.: *See*—
Wislocky, Joseph. 3,396,316.
International Resistance Co.: *See*—
Burham, Francis P., and Hamilton. 3,395,674.
International Salt Co.: *See*—
Jacoby, Charles H., and Whelply. 3,396,113.
International Standard Electric Corp.: *See*—
Ulrich, Friedrich, and Villinger. 3,396,242.
Vazquez, Charles. 3,396,257.
International Typographical Union of North America: *See*—
Brewer, Claire N. 3,395,860.
Inventions Finance Corp.: *See*—
Nouel, Robert. 3,395,424.
Irmscher, Klaus, H.-H. Bork, and H.-G. Kraft, to E. Merck A.G. Process for the manufacture of 6a,9a-difluoro, 1,4-pregnadiene-3,20-diones. 3,396,161, 8-6-68, Cl. 260—239.55.
Irvine, Laurence A., to United States of America, Air Force. Test chamber for growth and metabolism studies of biological cells. 3,396,084, 8-6-68, Cl. 195—127.

Isheim, Maynard C., and R. C. Stroshane, to Bartlett-Snow-Pacific, Inc. Combination dryer and cooler. 3,395,905, 8-6-68, Cl. 263—33.
Ishikawajima-Harima Jukogyo Kabushiki Kaisha: *See*—
Shibata, Kiyoshi. 3,395,721.
Itazawa, Toshio. Pitch controlling apparatus of a propeller of ships. 3,395,762, 8-6-68, Cl. 170—160.32.
Itoga, Masaaki: *See*—
Yumoto, Hirosuke, Harada, and Itoga. 3,396,216.
Iwai, Takao: *See*—
Matsumoto, Katumi, Iwai, and Fujioka. 3,396,128.
Jablin, Richard: *See*—
Finney, James A., Jr., and Jablin. 3,395,512.
Jackson, Aldrich L., 1/8 each to J. C. and C. A. Jackson, and J. H. Lindstrom. Table silver assorting machine. 3,395,795, 8-6-68, Cl. 209—74.
Jackson, Conway A.: *See*—
Jackson, Aldrich L. 3,395,795.
Jackson, Donald S.: *See*—
Parsons, Robert H., Kormendy, and Jackson. 3,396,031.
Jackson, Harold E., 1/2 to Petrol Injection Ltd. Fuel injection systems. 3,395,682, 8-6-68, Cl. 123—139.
Jackson, Harold E., 1/2 to Petrol Injection Ltd. Fuel injection systems. 3,395,683, 8-6-68, Cl. 123—140.
Jackson, James C.: *See*—
Jackson, Aldrich L. 3,395,795.
Jacobson, Chester F., to General Electric Co. Electrically heated bedcover overtemperature control. 3,396,265, 8-6-68, Cl. 219—212.
Jacobson, Robert S.: *See*—
Black, Stanley H., and Jacobson. 3,396,340.
Jacoby, Charles H., and F. V. Whelply, to International Salt Co. Anti-freezing additives. 3,396,113, 8-6-68, Cl. 252—70.
Jamon, Henri H., to Satra Societe Achat et Transactions. Electric overload relay. 3,396,353, 8-6-68, Cl. 335—229.
Japan Gasoline Co., Ltd.: *See*—
Sanga, Seiji, Ohtsu, and Sekido. 3,395,567.
Jaquith, Howard R.: *See*—
Barthel, Roy W., and Jaquith. 3,396,374.
Jennie, Fred L.: *See*—
Russell, Fred J., Armstrong, and Jennie. 3,395,558.
Jensen, Arne, to Danfoss A/S. Voltage controlled switch. 3,395,446, 8-6-68, Cl. 29—577.
Jetru Inc.: *See*—
Ratliff, Harvey L., Jr. 3,395,498.
Jo-Dee Corp.: *See*—
Mellion, Frank. 3,395,809.
Joest, Herbert: *See*—
Sennewald, Kurt, Erpenbach, Vogt, and Joest. 3,396,089.
Johansson, Gustaf I.: *See*—
Larsson, Lars B., and Johansson. 3,395,637.
Johns, Mansel. Portable grill. 3,395,692, 8-6-68, Cl. 126—30.
Johnson, Carl G. A., to The Alloy Engineering Co. Heat treating basket. 3,395,810, 8-6-68, Cl. 211—126.
Johnson, Kenneth R.: *See*—
Dodgen, Joe W., Johnson, and Snapp. 3,395,868.
Johnson, Norris M. Trimming gauge. 3,395,456, 8-6-68, Cl. 33—82.
Johnson, Ronald V., to Hoerner Waldorf Corp. Pouring spout carton. 3,395,848, 8-6-68, Cl. 229—17.
Johnson Service Co.: *See*—
Chapman, William P., Smith, and Donovan. 3,396,379.
Johnson, Stuart. Mechanical car-parking tower. 3,395,815, 8-6-68, Cl. 214—16.1.
Johnson, Terence L., to Automatic Switch Co. Fuel feed arrangement for oil burners. 3,395,863, 8-6-68, Cl. 239—125.
Jones, John P., Jr., to Navigation Computer Corp. Teletype converter system. 3,396,382, 8-6-68, Cl. 340—347.
Jones, Michael E. B.: *See*—
Thornton, David A., and Jones. 3,396,177.
Joyner, Bobby L.: *See*—
Anderson, James W., Heny, and Joyner. 3,396,286.
Joyner, Philip G.: *See*—
Hodges, John E., Joyner, and Weaver. 3,395,816.
Jucker, Erich, to Le Portescap S.A. Timepiece tester and method. 3,395,566, 8-6-68, Cl. 73—6.
Jullien, Maurice F. A., to Paulstra, Levallois-Perret. Vehicle suspension devices. 3,395,769, 8-6-68, Cl. 180—64.
Juvinall, Gordon L., to United States of America, National Aeronautics and Space Administration. Trialkyl-dihalotantalum and niobium compounds. 3,396,184, 8-6-68, Cl. 260—429.
Kagan, Sholly, to Polaroid Corp. High-voltage switching for two-color line-sequential color television. 3,396,233, 8-6-68, Cl. 178—5.4.
Kahane, Wilhelm, to W. Kahane, and M. and E. Efros. Cigarette having plastic sheet lined wrapper. 3,395,714, 8-6-68, Cl. 131—15.
Kalich, Rudolf. Method of and apparatus for mixing hydraulically hardenable binding material and water. 3,395,897, 8-6-68, Cl. 259—148.
Kanarek, Joseph S. Automatic device for counting articles and dividing the same into groups. 3,395,784, 8-6-68, Cl. 198—24.
Kaptur, Robert E., to Ford Motor Co. Servo motor for positioning a valve as a function of engine lad. 3,395,617, 8-6-68, Cl. 91—443.
Kapustin, Jury M.: *See*—
Vinogradov, Alexandr S., Kapustin, Maxjutenko, Kiselnikov, Borisov, and Mazalov. 3,395,425.
Karlsson, Gosta, and K. Folgero, to Allmanna Svenska Elektriska Aktiebolaget. Electromagnetic stirrer. 3,396,228, 8-6-68, Cl. 13—26.
Karlsson, Nils, R. Lundqvist, S. Nilsson, and R. Sivertsen, to Allmanna Svenska Elektriska Aktiebolaget. Dynamoelectric machine AC-DC converter system. 3,396,324, 8-6-68, Cl. 321—28.
Karr, Claude, to Commissariat a l'Energie Atomique and Institut Francais du Petrole des Carburants et Lubrifiants. Method and devices for supplying a magnetohydrodynamic generator. 3,395,967, 8-6-68, Cl. 431—1.
Karr, Willis F., and S. Le Vine, to Federal Engineering Co. Moving sidewalk. 3,395,648, 8-6-68, Cl. 104—25.
Kasehagen, Leo, to Atlas Chemical Industries, Inc. Hydrogenolysis of reducible sugars to obtain a high percentage of glycerol. 3,396,199, 8-6-68, Cl. 260—635.
Kato, Masayuki: *See*—
Sakai, Michihiko, Konishi, and Kato. 3,396,212.
Kauffman, John H., to National Engineering Co. Fluid conveyor switch. 3,395,731, 8-6-68, Cl. 137—610.
Kautz, George R., and C. J. Lawson, to Sylvania Electric Products, Inc. Exposure device. 3,395,628, 8-6-68, Cl. 95—1.
Keenan, Edward R., to United States of America, Navy. Torpedo launching tube door. 3,395,669, 8-6-68, Cl. 114—238.
Keene, Alfred W.: *See*—
Frey, Max, and Keene. 3,395,704.
Keene, Robert J., to United States Steel Corp. Apparatus for displacing scum in continuous casting molds. 3,395,750, 8-6-68, Cl. 164—259.
Keim, Melville. Wind device particularly adapted for boats. 3,395,577, 8-6-68, Cl. 73—188.
Keith, George E., Jr., to General Precision System Inc. Thermochromic display system. 3,396,378, 8-6-68, Cl. 340—324.
Kelly, Charles M., and B. D. Raffel, to Goodyear Aerospace Corp. Radar transparent covering. 3,396,400, 8-6-68, Cl. 343—872.
Kelly, Warner M., and J. E. Reagan, to Otis Engineering Corp. Lateral flow duct and flow control device for wells. 3,395,758, 8-6-68, Cl. 166—100.
Kelsey-Hayes Co.: *See*—
Stelzer, William. 3,395,537.
Swift, Harvey C. 3,395,780.
Kendall Co., The: *See*—
Higgins, Charles R., and Whalen. 3,395,706.
Whalen, John G., and Higgins. 3,395,707.
Kennedy, James J.: *See*—
Hardin, William W., and Kennedy. 3,396,276.
Kent, George Ltd.: *See*—
Stoten, Terence A. 3,395,579.
Kenworthy, Ronald: *See*—
Wilde, Dennis, and Kenworthy. 3,395,943.
Kerns, Clyde W., to Mobil Oil Corp. Method of processing geophysical data with stable inverse filters. 3,396,365, 8-6-68, Cl. 340—15.5.
Kessinger, Gene L., to A. E. Staley Mfg. Co. Free flowing shortening composition. 3,396,035, 8-6-68, Cl. 99—94.
Keuffel & Esser Co.: *See*—
Geier, George. 3,395,607.
Keyser, Naaman H., to Interlake Steel Corp. Process for the manufacture of stainless steel. 3,396,014, 8-6-68, Cl. 75—130.5.
Kidde, Walter, & Co., Inc.: *See*—
Grant, Harry C., Jr. 3,396,387.
Kiesling, John D., to Radio Corp. of America. Directive antennas. 3,396,394, 8-6-68, Cl. 343—100.
Kind, Wilhelm, and K.-H. Schneider, to Robert Bosch, G.m.b.H. Distributor for internal combustion engine. 3,396,249, 8-6-68, Cl. 200—19.
Kindred, William B. Slot car track. 3,395,861, 8-6-68, Cl. 238—10.
King, Burnham W., Jr.: *See*—
Hedden, Walter A., Bowers, and King. 3,396,055.
King, Paul F.: *See*—
Button, Peter A., Miller, and King. 3,396,235.
Kinkohsha Insatsu Kabushiki Kaisa (Rep: Kinsen Tokuda): *See*—
Tokuda, Yoshio. 3,396,279.
Kinnavy, Roger J.: *See*—
Grebel, Grant, and Kinnavy. 3,395,644.
Kirchner, Herbert, to Reimers-Getriebe AG. Infinitely variable, hydraulically controlled transmissions for motor vehicles. 3,395,586, 8-6-68, Cl. 74—230.17.
Kirkus, Ludwig, and L. S. Tyma, to Miehle-Goss-Dexter, Inc. Impression cylinder construction to prevent streaking in letterpress. 3,395,638, 8-6-68, Cl. 101—216.
Kirsch, Bernhard. Electric hand-operated spot welder. 3,396,261, 8-6-68, Cl. 219—90.
Kischio, Werner, to North American Philips Co. Inc. Method of manufacturing aluminum nitride. 3,395,981, 8-6-68, Cl. 23—192.
Kiselnikov, Vladimir Nikolevich: *See*—
Vinogradov, Alexandr S., Kapustin, Kiselnikov, Bosisov, and Mazalov. 3,395,425.
Kisrow, Le Verne A., to Contemporary Electronic Products Corp. Voltage regulating circuit supplying current pulses of uniform amplitude and length. 3,396,326, 8-6-68, Cl. 323—9.
Kissinger, Leonard W.: *See*—
Benziger, Theodore M., Kissinger, and Ungnade. 3,396,187.
Klapprodt, Glen. Snow thrower. 3,395,466, 8-6-68, Cl. 37—43.
Klein, Clarence F., and R. L. Du Mond, to Packaging Corp. of America. Coating apparatus including work-transfer means having direction changer. 3,395,673, 8-6-68, Cl. 118—2.
Kleissler, Arthur J., to G. A. Kleissler Co. Dust separator and collector. 3,395,519, 8-6-68, Cl. 55—304.
Kleissler, G. A., Co.: *See*—
Kleissler, Arthur J. 3,395,519.
Klinger, Stephen R., to The National Cash Register Co. Automatic tape wind-up means. 3,395,870, 8-6-68, Cl. 242—55.11.

Klosek, Felix P.: *See*—
Szabo, Ted T., and Klosek. 3,395,746.
Knapp, Edmund C., to Monsanto Co. Chewing gum. 3,396,038, 8–6–68, Cl. 99—135.
Knapsack Aktiengesellschaft: *See*—
Sennewald, Kurt, Erpenbach, Vogt, and Joest. 3,396,089.
Knudsen, Erik S., to Slagteriernes Forskningsinstitut. Method for determining the fat content of trimmings or similar pieced meats. 3,396,280, 8–6–68, Cl. 250—223.
Kobayashi, Haruhiro, and T. Oikado, to Nippon Electric Co. Ltd. Gas laser tube having a hollow elongated cathode electrode. 3,396,301, 8–6–68, Cl. 313—210.
Kochalski, Horst, to Hauni-Werke Koerber and Co. K.G. Method and apparatus for testing cigarettes or the like. 3,395,570, 8–6–68, Cl. 73—45.2.
Kochey, Edward L., Jr., to Combustion Engineering, Inc. Steam generation and enthalpy separation of flowing supercritical pressure steam. 3,395,678, 8–6–68, Cl. 122—406.
Kodaira, Nobuhisa, and N. Motegi. Apparatus for heat setting synthetic fibre yarns. 3,395,433, 8–6–68, Cl. 28—62.
Koehl, William J., Jr., to Mobil Oil Corp. Electrochemical synthesis of ketones. 3,396,093, 8–6–68, Cl. 204—59.
Kohman, Wayne E., to Curtiss-Wright Corp. Control system for ship roll stabilization. 3,395,667, 8–6–68, Cl. 114—122.
Kokusai Denshin Denwa Kabushiki Kaisha: *See*—
Yamauchi, Kakuro. 3,396,239.
Kolobielski, Marjan, to United States Steel Corp. 9,10-bis (hydroxymethyl)-s-octahydroanthracene, its derivatives and polyester resins therefrom. 3,396,148, 8–6–68, Cl. 260—75.
Kolze, Lawrence A., P. W. Schaff, and N. L. Benedetti, to The Dole Valve Co. Zone valves. 3,395,885, 8–6–68, Cl. 251—11.
Koncak, Donald S. Closure means for wrapped packages. 3,395,852, 8–6–68, Cl. 229—87.
Konishi, Kazuo: *See*—
Sakai, Michihiko, Konishi, and Kato. 3,396,212.
Koorneef, Jacob, and J. P. Beun, to North American Philips Co., Inc. Method of manufacturing useful gaps of accurately the same length throughout their width between two circuit parts of a magnetic head. 3,395,450, 8–6–68, Cl. 29—603.
Kopa, Richard D., to The Regents of the University of California. Carburetor. 3,395,899, 8–6–68, Cl. 261—22.
Kopineck, Hermann-Josef, H. Muszkiewicz, and C. Schlotter, to Polysius G.m.b.H. Method of conveying fine granular and pulverous material by gaseous means. 3,395,945, 8–6–68, Cl. 302—66.
Kopp, Georg, to Schweizerische Industrie-Gesellschaft. Device for measuring pulverulent material. 3,395,837, 8–6–68, Cl. 222—277.
Kormendy, Leslie J.: *See*—
Parsons, Robert H., Kormendy, and Jackson. 3,396,031.
Kornhauser, Mark H.: *See*—
Warren, Robert M., Jr., and Kornhauser. 3,395,633.
Kosanke, Kurt M.: *See*—
Chang, Paul T., and Kosanke. 3,395,960.
Kotowick, Joseph L. Containers with integral, interlocking corners and covers. 3,395,850, 8–6–68, Cl. 229—36.
Kott, Michael A., to United States of America, Air Force. Dielectric zoom lens for microwave beam scanning. 3,396,397, 8–6–68, Cl. 343—754.
Kowaleski, Clarence, to Bell Telephone Laboratories, Inc. Handset mounted alternate action switchhook and associated mode indicator means. 3,396,244, 8–6–68, Cl. 179—100.
Kraft, Hans-Gunther: *See*—
Irmscher, Klaus, Bork, and Kraft. 3,396,161.
Krane, Bronnie F., to United States Seel Corp. Air filter with traveling filter-medium screen. 3,395,518, 8–6–68, Cl. 55—290.
Krank, Wolfgang, and G Schickle, to Telefunken Patentverwertungs-G.m.b.H. Waveguide. 3,396,350, 8–6–68, Cl. 333—95.
Kraus, Leon S., and E. B. Fall, Jr. Sewage treatment and apparatus therefor. 3,395,800, 8–6–68, Cl. 210—66.
Krause, Wally L. Visual training aid. 3,395,461, 8–6–68, Cl. 35—6.
Kruse, Orien A., to Studebaker Corp. Engine decompression apparatus. 3,395,689, 8–6–68, Cl. 123—182.
Kugler, Emanuel. Satchel bottom bag manufacture. 3,395,622, 8–6–68, Cl. 93—35.
Kugler, Ralph W., and R. A. Wenston, to Westinghouse Air Brake Co. Circuit controller for railway switch machines. 3,396,270, 8–6–68, Cl. 246—218.
Kuiper, James R., and L. C. Verduin, to R. C. Allen Business Machines, Inc. Combination turn, bank and climb indicator. 3,395,576, 8–6–68, Cl. 73—178.
Kumpf, August W., to Clyde Iron Works Inc. Hydraulic spooling device. 3,395,893, 8–6–68, Cl. 254—190.
Kun, Leslie C., to Union Carbide Corp. Gas-bearing assembly. 3,395,949, 8–6–68, Cl. 308—9.
Kuroda, Hideo, to Nippon Electric Co. Ltd. Means for observing electron beams. 3,396,262, 8–6–68, Cl. 219—121.
Kurtz, Harold I. Method and apparatus for the treatment of sewage. 3,395,799, 8–6–68, Cl. 210—1.
Kuryla, Alan T., to Sylvania Electric Products Inc. Series connected heater element for multiple electron gun subassembly. 3,396,298, 8–6–68, Cl. 313—70.
Kuster, Hans G., to Rubber and Wheel Industries (Proprietary) Ltd. Fastening assemblies. 3,395,864, 8–6–68, Cl. 238—310.
Kuze, Yoshikaze. Thermostat. 3,395,580, 8–6–68, Cl. 73—368.3.
Kvavle, Robert C., to United Shoe Machinery Corp. Explosively actuated impact tools. 3,395,843, 8–6–68, Cl. 227—10.
Laboratory for Electronics, Inc.: *See*—
Midlock, Bernard J., and Carlisle. 3,396,366.
Laczko, Joseph. Vehicle wheel. 3,395,942, 8–6–68, Cl. 301—63.
Lador S.A.: *See*—
Villiger, Remy. 3,395,599.
Lague, Francois, and N. Ruel, to Equipment R. Lague Limitee. Straightener for deformed sides of railroad carriers. 3,395,561, 8–6–68, Cl. 72—308.
Laguzzi, Mario, to Poirette Corsets, Inc. Reinforced elastic foundation garment. 3,395,712, 8–6–68, Cl. 128—539.
Lakhani, Azizuddin H. I., to British Telecommunications Research Ltd. Electrical signalling arrangement for control of tape transmission system. 3,396,368, 8–6–68, Cl. 340—146.1.
Lakin, Hubert W.: *See*—
Nakagawa, Harry M., and Lakin. 3,395,987.
Lam, John S.: *See*—
Moyer, Donald W., Swanson, and Lam. 3,395,771.
Lamy, Jacques E., to Societe d'Etude de la Valorisation des Gaz Naturels du Sahara S.E.G.A.N.S. Connection element for expansion joints. 3,395,505, 8–6–68, Cl. 52—276.
Landau, Raphael, to Ozalid Co. Ltd. Solvent dispersion of silica particles and treatment of polyester and polycarbonate substrates therewith. 3,396,046, 8–6–68, Cl. 106—287.
Lang, Franz, and W. Sittner. Dust removable device. 3,395,517, 8–6–68, Cl. 55—285.
Langdon, Howard H., to Culator Corp. Machine for forming random fiber webs. 3,395,426, 8–6–68, Cl. 19—156.3.
Lange, Hans, and G. Schlicht, deceased (by E. M. E. Schlicht, legal representative), to Deutsche Erdol-Aktiengesellschaft. Process for the exploitation of bitumens-containing strata by underground preparation and gasification. 3,395,756, 8–6–68, Cl. 166—36.
Langford, Melvin O.: *See*—
Leydig, Clyde O., and Langford. 3,395,520.
Langston, Everett E. Lug construction. 3,395,823, 8–6–68, Cl. 217—40.
Lansing Bagnall Ltd.: *See*—
Payne, Ivan S. 3,396,313.
Lansink, Gerrit J., to N.V. Hollandse Signaalapparaten. Circuit arrangement for feeding electrical apparatus by way of a transistor circuit. 3,396,292, 8–6–68, Cl. 307—202.
Lanza, Warren A.: *See*—
Boothe, Willis A., and Lanza. 3,395,719.
La Plante, Jerry C., to Alloys Unlimited, Inc. Powder rolling of nickel-iron-cobalt alloys. 3,396,015, 8–6–68, Cl. 75—214.
Larson, Chas. O., Co.: *See*—
Larson, Charles O. 3,395,792.
Larson, Charles O., to Chas. O. Larson Co. Display. 3,395,792, 8–6–68, Cl. 206—80.
Larson, John R.: *See*—
Lusskin, Robert M., Backer, and Larson. 3,396,147.
Larsson, Lars B., and G. I. Johansson, to Ostbergs Fabriks AB. Load carrier for a log skidding sulky. 3,395,637, 8–6–68, Cl. 100—212.
Larsson, Svend E.: *See*—
Zeuthen, Karl G., and Larsson. 3,396,234.
Laskin, Mauric, to W. R. Grace & Co. Method of producing rehydratable, freeze-dried peanut butter products. 3,396,041, 8–6–68, Cl. 99—204.
Latawiec, John S., to J. L. Clark Mfg. Co. Sheet metal container body and method of making same. 3,395,827, 8–6–68, Cl. 220—76.
Laufer, Louis, and B. W. Town, to Schwarz Bioresearch, Inc. Use of a complex of a cuprous halide and hydroxylamine for the preparation of copper mercaptides. 3,396,156, 8–6–68, Cl. 260—112.5.
Laukala, Delvin E., to Mardel Investment Co. Concrete curb form construction. 3,395,884, 8–6–68, Cl. 249—4.
Lautenschlaeger, Friedrich K., and N. V. Schwartz, to The Dunlop Co. Episulphide production. 3,396,175, 8–6–68, Cl. 260—327.
Lawson, Clarence J.: *See*—
Kautz, George R., and Lawson. 3,395,628.
Lazarev, Jury P.: *See*—
Svyadosch, Jury N., Lazarev, and Melnichenko. 3,395,907.
Lear Jet Corp.: *See*—
Auld, Samuel H. 3,396,323.
Leary, Ralph J., P. A. Argabright, and J. R. Michael, to Esso Research and Engineering Co. Paradioxadiene-N_2F_4 adducts having one NF_2 group attached to each of two or four carbon atoms in the dioxadiene ring. 3,396,176, 8–6–68, Cl. 260—340.6.
Leatherman, Alfred F., to W. C. Heller, Jr. Apparatus for induction heating. 3,396,258, 8–6–68, Cl. 219—10.53.
Leavens, Dwight E., and J. M. Derfer, to SCM Corp. Process for recovery of purified saturated higher fatty acid from fatty acid fractions. 3,396,182, 8–6–68, Cl. 260—419.
Le Blanc, Walter J.: *See*—
Bayliff, Robert, Le Blanc, and Sidles. 3,395,879.
Lebrun, Jean P.: *See*—
Finzi, Sergio, Faure, and Lebrun. 3,396,079.
Lednicer, Daniel, to The Upjohn Co. Substituted 2-phenyl-1-(tertiaryaminoalkoxy) phenyl-3,4-dihydronaphthalenes. 3,396,169, 8–6–68, Cl. 260—294.7.
Lee, Charles A., and W. R. Furbeck, to Appleton Wire Works Corp. Sewing method and apparatus for making sewn fabric. 3,395,658, 8–6–68, Cl. 112—2.
Lee, Edmund S., III: *See*—
Borel, Ronald F., and Lee. 3,395,538.
Lee, Jimmy G., to Schlumberger Technology Corp. Methods and apparatus for taking the logarithm of well logging measurements utilizing a time domain technique. 3,396,330, 8–6–68, Cl. 324—6.
Leeds & Northrup Co.: *See*—
Parker, Kenneth B., Jr. 3,396,404.
Legal, Casimer C., Jr., and A. Richmond, to W. R. Grace & Co. Continuous method of producing ammonium phosphate fertilizer. 3,396,004, 8–6–68, Cl. 71—39.
Lehman, Irvin H.: *See*—
Funk, William E., and Lehman. 3,395,896.

Lehrer, Erwin: *See*—
Bartholome, Ernst, Lehrer, and Schierwater. 3,396,207.
Leiner, Robert L.: *See*—
Avena, Samuel, and Leiner. 3,395,763.
Leistner, William E., and A. C. Hecker, to Argus Chemical Corp. Organic triphosphites and synthetic resin compositions containing the same. 3,396,130, 8–6–68, Cl. 260—23.
Leland, Ragnvald G. Cleaning devices having interchangeable heads. 3,395,415, 8–6–68, Cl. 15—121.
Lenox, Stanley: *See*—
Welsberg, Eugene, and Lenox. 3,395,654.
Leo, Albert J., and E. Bielskis, to National Pectin Products Co. Pumpable stabilizer-emulsifier incorporating readily dispersible hydrophilic colloids. 3,396,039, 8–6–68, Cl. 99—136.
Leonard, Verna M. Apparatus of keyboard instruction. 3,395,600, 8–6–68, Cl. 84—478.
Le Portescap S.A.: *See*—
Jucker, Erich. 3,395,566.
Leslie, John C., and B. E. Dieruf, to Leslie R. Lloyd. Teaching machine systems. 3,395,464, 8–6–68, Cl. 35—9.
LeVaux, Rene G.: *See*—
Bechard, Emile. 3,396,088.
Le Vine, Saul: *See*—
Karr, Willis F., and Le Vine. 3,395,648.
Lewis, George D., Jr., and L. A. Wollstein. Multiple serging machine. 3,395,660, 8–6–68, Cl. 112—123.
Lewis, Iolo L.: *See*—
Macmillan, Richard B., and Lewis. 3,396,131.
Lewek, Stanley S., to Corning Glass Works. Method of treating glass in a molten salt. 3,395,999, 8–6–68, Cl. 65—30.
Leydig, Clyde O., and M. O. Langford. Tree topping machine. 3,395,520, 8–6–68, Cl. 56—235.
Libbey-Owens-Ford Glass Co.: *See*—
Carson, Frank J., Ferguson, Ritter, and Hymore. 3,396,000.
Liepa, Alexander L., to The Proctor & Gamble Co. Potato food product. 3,396,036, 8–6–68, Cl. 99—100.
Lilly, Eli and Co.: *See*—
Van Heyningen, Earle M. 3,396,224.
Linden Laboratories Inc.: *See*—
Anderson, James W., Heny, and Joyner. 3,396,286.
Lindkvist, Erik, to Perstorp Aktiebolag. Apparatus for the production of formic acid. 3,395,989, 8–6–68, Cl. 23—263.
Lindstrom, John H.: *See*—
Jackson, Aldrich L. 3,395,795.
Little, Arthur G., and A. D. Martin, to The Dow Chemical Co. Method for making glass fiber reinforced thermoplastic polymer articles. 3,396,142, 8–6–68, Cl. 260—41.
Little, Colin R.: *See*—
Checkley, Peter E., Escott, and Little. 3,395,650.
Litton Systems, Inc.: *See*—
Rider, Bernard. 3,396,349.
Lloyd, Leslie R.: *See*—
Leslie, John C., and Dieruf. 3,395,464.
Lodige, Alois. Arrangement for automatically closing energy passage systems, especially air passages. 3,395,568, 8–6–68, Cl. 73—35.
Logan, Frank G., to United States of America, Navy. Static reverse power relay. 3,396,310, 8–6–68, Cl. 317—39.
Logan, Kenneth C., and O. Sepall, to Anglo Paper Products, Ltd. Wood chip. 3,396,069, 8–6–68, Cl. 161—117.
Lohse, Perry O. Turnpike turn signal timing and cancelling assembly. 3,396,367, 8–6–68, Cl. 340—55.
Long, John A., K. W. Mayer, and G. R. McVey, to The O. M. Scott & Sons Co. Method of growing grasses under modified light. 3,395,487, 8–6–68, Cl. 47—58.
Long, Ronald K.: *See*—
Charlton, Thomas E., and Long. 3,396,396.
Longley, Harold, to Scandura Inc. Yarn and fabric made therefrom. 3,395,527, 8–6–68, Cl. 57—140.
Look, Arthur J., to Prevue Display Service, Inc. Traveling tape display. 3,395,472, 8–6–68, Cl. 40—32.
Loos, Cornelis H., and J. B. H. Peek, to North American Philips Co., Inc. Circuit arrange for converting an analog signal into a pulse sequence modulated in number. 3,396,384, 8–6–68, Cl. 340—347.
Loukes, David G., to Pilkington Brothers Ltd. Method and apparatus for inhibiting the flow of impurities of a molten bath to the glass sheet thereon. 3,395,996, 8–6–68, Cl. 65—27.
Loveday, Harry W.: *See*—
Whittaker, Jack D., Loveday, Barbour, Tweedle, and Dryden. 3,395,458.
Lovely, William S.: *See*—
Murray, Alfred E. 3,395,515.
Spalding, Dudley B., and Singham. 3,395,902.
Low, Donald D., to United States of America, Atomic Energy Commission. Fail-safe alarm system. 3,396,375, 8–6–68, Cl. 340—236.
Lubojatsky, Walter, to Gullick Ltd. Self-advancing mine roof supports. 3,395,616, 8–6–68, Cl. 91—412.
Lubrizol Corp., The: *See*—
Butler, Thomas A., and Wiese. 3,396,109.
Lucht, Wilbert A., to United States Steel Corp. Stainless steel wire products and method of making the same. 3,395,528, 8–6–68, Cl. 57—145.
Lundberg, Herbert J. Traction means for vehicle wheels. 3,395,862, 8–6–68, Cl. 238—14.
Lundqvist, Ragnar: *See*—
Karlsson, Nils, Lundqvist, Nilsson, and Sivertsen. 3,396,324.
Lurie, Robert: *See*—
Campbell, James G., and Lurie. 3,395,486.
Lusskin, Robert M., F. Backer, and J. R. Larson, to Universal Oil Products Co. Epoxy resin compositions of matter. 3,396,147, 8–6–68, Cl. 260—47.
Lyons, Ernest H., Jr., and R. M. Dempsey, to General Electric Co. Process of forming electrocatalytic surfaces. 3,396,091, 8–6–68, Cl. 204—11.
Lyte, Frank G.: *See*—
Remke, Marvin A., and Lyte. 3,395,923.
MacFadden, John A., and R. J. Buresch, to G. T. Schjeldahl Co. Aerodynamic site marker balloon. 3,395,877, 8–6–68, Cl. 244—33.
Machell, Greville, to Deering Milliken Research Corp. Method of carbonizing polyacrylonitrile impregnated cellulose, cyanoethylated cellulose and acrylonitrile graft copolymerized cellulose textiles. 3,395,970, 8–6–68, Cl. 8—116.2.
Macmillan, Richard B., and I. L. Lewis, to Imperial Chemical Industries Ltd. Chlorine-containing resins stabilized with mixtures comprising a phenyl urea and a phosphite, and optionally a magnesium compound. 3,396,131, 8–6–68, Cl. 260—23.
Mador, Irving L.: *See*—
McClain, Dorothee M., and Mador. 3,396,190.
Maeda, Hisayoshi, to Toyo Kogyo Co., Ltd. Rotary furnace with rotatable chamber. 3,395,904, 8–6–68, Cl. 263—7.
Magee, Thomas A., to Diamond Shamrock Corp. Insecticidal use of exo,exo-4,8-dichloro 2-thiatricyclo[3,2.1.$0^{3,7}$]octane 2,2 dioxide. 3,396,225, 8–6–68, Cl. 424—275.
Magid, Louis: *See*—
Cavalli, Arnold, and Magid. 3,396,226.
Magin, August: *See*—
Reppe, Walter, and Magin. 3,396,191.
Magnesium Elektron Ltd.: *See*—
Berry, Ronald. 3,395,974.
Magnotta, Frank A., and A. C. Poshkus, to Armstrong Cork Co. Preparation of aromatic sulfonyl bromides via the aqueous bromination of aromatic sulfonyl hydrazides. 3,396,194, 8–6–68, Cl. 260—543.
Maiman, Theodore H., R. H. Hoskins, B. H. Soffer, R. C. Pastor, and M. A. Pearson, to Union Carbide Corp. Green luminescing phosphor for color television and method of making same. 3,396,119, 8–6–68, Cl. 252—301.4.
Makino, Shinobu, to Shinko Electric Co., Ltd. Vibratory motor. 3,396,294, 8–6–68, Cl. 310—81.
Malin, Charles G. Portable scraper device. 3,395,414, 8–6–68, Cl. 15—93.
Mallebrein, Rainer, to Telefunken Patentverwertungs-G.m.b.H. Circuit arrangement for producing a pulse subsequent to a transient setting operation. 3,396,306, 8–6–68, Cl. 315—22.
Malmo, John R., to Gem, Inc. Wax applicator and refills. 3,395,418, 8–6–68, Cl. 15—231.
Maltner, Wolfgang, and H. Dieterle, to Heinrich Maltner G.m.b.H. Piezo-electric spark igniter. 3,396,311, 8–6–68, Cl. 317—81.
Manion, Jean P., A. J. Hipp, and D. J. Davies, to Allis-Chalmers Mfg Co. Electrical discharge apparatus for obtaining hydrazine from ammonia. 3,396,098, 8–6–68, Cl. 204—312.
Manning, George E.: *See*—
Allen, William M., and Manning. 3,395,467.
Manning, William F., to Mobil Oil Corp. Bottom access caisson. 3,395,755, 8–6–68, Cl. 166—.5.
Mansell, Stanley W., and F. C. I. Marchant, to Bristol Siddeley Engines Ltd. Seals between rotating parts. 3,395,955, 8–6–68, Cl. 308—187.
Manufacture de Vilebrequin de Lorette (Mavilor): *See*—
Patrignani, Leonida. 3,396,288.
Manufacturers Supplies Co.: *See*—
Beck, Edwin H. 3,396,068.
Marchant, Francis C. I.: *See*—
Mansell, Stanley W., and Marchant. 3,395,955.
Mardel Investment Co.: *See*—
Laukala, Delvin E. 3,395,884.
Marine Construction & Design Co.: *See*—
Grimes, Eldon L. 3,395,549.
Marischen, John P., to Ampco Metal, Inc. Impeller construction. 3,395,649, 8–6–68, Cl. 103—103.
Markham, Odell C., and A. C. Ferguson. Parachute protected aircraft. 3,395,881, 8–6–68, Cl. 244—139.
Marmor, Solomon, to Research Corp. Production of chloroquinones. 3,396,178, 8–6–68, Cl. 260—396.
Marshall, Louise A., to United States of America, Air Force. Intravenous infusion bottle holder. 3,395,882, 8–6–68, Cl. 248—318.
Martel, Jacques, E. Toromanoff, and C. Huynh, to Roussel-UCLA. Colchicinic intermediates and process for their preparation. 3,396,188, 8–6–68, Cl. 260—465.
Martin, Allan D.: *See*—
Little, Arthur G., and Martin. 3,396,142.
Martin, Cecil G., and W. E. Bartley III, to Energy Technology, Inc. Compressor. 3,395,854, 8–6–68, Cl. 230—75.
Martin, Merrill D. Die rules. 3,395,598, 8–6–68, Cl. 83—663.
Martin, Philip T., and D. J. Tompos, to Industrial Nucleonics Corp. Ionization type radiation detector. 3,396,275, 8–6–68, Cl. 250—83.6.
Maschinenfabrik Rheinhausen Gebruder Scheubeck K.G.: *See*—
Bleibtreu, Alexander. 3,396,254.
Mason, Robert B.: *See*—
Fuerst, Edwin W., and Mason. 3,395,821.
Masson, James C.: *See*—
Chamberlin, Howard A., and Masson. 3,396,154.
Masson Scott Thrissell Engineering Ltd.: *See*—
Dobson, Ian G., and Bass. 3,395,916.
Massoubre, Jean-Marie, to Compagnie Generale des Etablissements Michelin Raison Sociale Michelin & Cie. Vehicle tire. 3,395,745, 8–6–68, Cl. 152—361.
Massoubre, Jean-Marie, to Compagnie Generale des Etablissements Michelin Raison Sociale Michelin & Cie. Lacquer and glue and processes of using the same. 3,396,063, 8–6–68, Cl. 156—331.
Matbro Ltd.: *See*—
Mathew, Leonard S., and Chapman. 3,395,820.
Mathew, Leonard S., and G. W. Chapman, to Matbro Ltd. Forklift trucks. 3,395,820, 8–6–68, Cl. 214—671.

Mathias, Benny B.: *See*—
  Baker, Theodore C., Mathias, and Sager. 3,395,573.
Matouka, Nicholas, to Formax Mfg. Corp. Backup pad assembly. 3,395,417, 8-6-68, Cl. 15—230.
Matsuda, Shogo, and K. Takagi, to Asahi Kasei Kogyo Kabushiki Kaisha. Method for dyeing polyolefin shaped articles. 3,395,969, 8-6-68, Cl. 8—31.
Matsushita Electronics Corp.: *See*—
  Tojo, Tamotsu. 3,396,053.
Matsumoto, Katumi, T. Iwai, and Y. Fujioka, to Takeda Chemical Industries, Ltd. Method for promoting crystallization of unsaturated polyester resins. 3,396,128, 8-6-68, Cl. 260—22.
Max, Erhard, and G. T. Sincerbox, to International Business Machines Corp. Optical information read-out system. 3,396,-266, 8-6-68, Cl. 235—61.11.
Maxjutenko, Ilya N.: *See*—
  Vinogradov, Alexandr S., Kapustin, Kiselnikov, Bosisov, and Mazalov. 3,395,425.
Mayer, Eugene W.: *See*—
  Long, John A., Mayer, and McVey. 3,395,487.
Mazalov, Ivan M.: *See*—
  Vinogradov, Alexandr S., Kapustin, Kiselnikov, Bosisov, and Mazalov. 3,395,425.
Mazurkevics, Anatolijs, and O. P. Pilgrim, to Allen Electric and Equipment Co. Engine tester mounting system. 3,395,-574, 8-6-68, Cl. 73—116.
McCarty, Charles B., and K. W. Theile, to The Procter & Gamble Co. Hydrobromination of olefins in a thin turbulent film. 3,396,204, 8-6-68, Cl. 260—663.
McCarthy, William C., and F. M. Brinkmeyer, to Phillips Petroleum Co. Fractional crystallization. 3,395,867, 8-6-68, Cl. 241—38.
McClain, Dorothee M., and I. L. Mador, to National Distillers and Chemical Corp. Process for aliphatic nitriles. 3,396,-190, 8-6-68, Cl. 260—465.1.
McClure, Nancy R.: *See*—
  Herzberger, Maximilian J., and McClure. 3,395,962.
McClure William F.: *See*—
  Cogdell, David M., McClure, and Baggett. 3,395,829.
McConnell, David P.: *See*—
  Weber, Gregory E., and McConnell. 3,395,408.
McCrae, John C., and H. A. Dooley. Compressible infusion device. 3,396,032, 8-6-68, Cl. 99—77.1.
McCulloch Corp.: *See*—
  Brooks, John H. 3,395,680.
McDaniel, Raymond R. Recording and reproduction of intelligence signals. 3,396,243, 8-6-68, Cl. 179—100.3.
McDonald, Ronald D.: *See*—
  Shumard, Kermit J., and McDonald. 3,395,924.
McDonnell Aircraft Corp.: *See*—
  Sherlock, Harrison B., and Stanley. 3,395,546.
McDonnell Douglas Corp.: *See*—
  Morehouse, Laurence E. 3,395,698.
McDowell-Wellman Engineering Co.: *See*—
  Roach, Donald E. 3,395,725.
McFall, John C., and G. S. Dundon, to Eastman Kodak Co. Method of noodling gelatin dispersions. 3,396,027, 8-6-68, Cl. 96—94.
McGraw-Edison Co.: *See*—
  Wilson Gordon A., Jr. 3,396,248.
McKillip, William J., and C. N. Impola, to Ashland Oil Refining Co. Compositions made from (a) isocyanate-terminated prepolymers; and (b) polyesters prepared from polyols and α,β-ethylenically unsaturated. 3,396,210, 8-6-68, Cl. 260—859.
McKillop, Allan: *See*—
  Davy, John R., McKillop, and Brash. 3,396,238.
McKinnon, Allen G., to Burlington Industries Inc. Method of and apparatus for neutralizing static electricity on filling picks of looms and the like. 3,395,865, 8-6-68, Cl. 139—196.
McPherson, William R. Fish hooks and lures. 3,395,480, 8-6-68, Cl. 43—42.09.
McVey, George R.: *See*—
  Long, John A., Mayer, and McVey. 3,395,487.
Mecanorga S.A.: *See*—
  Defrenne, Paul C. F. 3,395,952.
Medley, Jackson C., D. L. Smith, and M. F. Franz, to Caterpillar Tractor Co. Hydraulic brake circuit for dual vehicles. 3,395,946, 8-6-68, Cl. 303—2.
Meek, George W., to Munters & Co. Gas and liquid contact apparatus. 3,395,900, 8-6-68, Cl. 261—29.
Meek, George W.: *See*—
  Norback, Per G., and Meek. 3,395,903.
Melanson, William A., to Cambridge Thermionic Corp. Electrical lead through connector with binding post and jack. 3,396,359, 8-6-68, Cl. 339—32.
Mellon, Frank, to Jo-Dee Corp. Battery dispenser. 3,395,-809, 8-6-68, Cl. 211—59.
Melnichenki, Mikhail A.: *See*—
  Svyadosch, Jury N., Lazarev, and Melnichenko. 3,395,-907.
Mendaloff, Alexander, Jr. Cable laying apparatus. 3,395,545, 8-6-68, Cl. 61—72.6.
Mendelson, Emanuel S., to United States of America, Navy. Acoustic reflexometer. 3,395,697, 8-6-68, Cl. 128—2.
Menges, Jacob T., 24½% to J. C. Yarborough and 24½% to J. C. Holcomb. Garbage and refuse collecting and disposal means. 3,395,859, 8-6-68, Cl. 232—43.2.
Menier, Jean: *See*—
  Van Diest, Jacques, and Menier. 3,396,095.
Mennesson, Andre L., to Societe Industrielle de Brevets et d'Etudes S.I.B.E. Devices for dividing into at least two portions a stream of a mixture of a liquid fluid and a gaseous fluid. 3,395,730, 8-6-68, Cl. 137—561.
Merck, E., A.G.: *See*—
  Irmscher, Klaus, Bork, and Kraft. 3,396,161.
Merck & Co., Inc.: *See*—
  Wendler, Norman L., and Taub. 3,396,192.
Merkel, Hans, to Siemens Aktiengesellschaft. Method for producing highly pure, particularly silicon-free $A^{III}B^{V}$ compounds. 3,395,985, 8-6-68, Cl. 23—204.
Merritt, A. Jay: *See*—
  Freedman, Louis, and Merritt. 3,396,193.
Messerly, Gary A., W. H. Royer, and W. H. Gilgore, to Read Corp. Baking ovens and product loading and unloading means therefor. 3,395,653, 8-6-68, Cl. 107—57.
Meter-All Mfg. Co., Inc.: *See*—
  New, Russell W. 3,395,832.
Meyer, Geo. J., Mfg. Co.: *See*—
  Friendship, Kenneth F. 3,395,739.
Meyer, Owen A.: *See*—
  Andreasen, Sigurd J., and Meyer. 3,395,465.
Meyer, William E.: *See*—
  Buddecke, Charles L., Meyer, and Stites. 3,396,305.
Meyers, George W. Load tie-down apparatus. 3,395,932, 8-6-68, Cl. 280—179.
Michael, James R.: *See*—
  Leary, Ralph J., Argabright, and Michael. 3,396,176.
Michigan Peat, Inc.: *See*—
  Allen, William M., and Manning. 3,395,467.
Midlock, Bernard J., and R. W. Carlisle, to Laboratory for Electronics, Inc. Ultrasonic wave directive assembly. 3,396,-366, 8-6-68, Cl. 340—38.
Midwest Research Institute: *See*—
  Bryant, Paul J., and Gosselin. 3,395,997.
Mieble-Goss-Decter, Inc.: *See*—
  Kirkus, Ludwig, and Tyma. 3,395,638.
Mihalisin, John R., to The International Nickel Co. Beryllium-containing maraging steel. 3,396,013, 8-6-68, Cl. 75—123.
Miksch, Johannes, and L. Bauer, to John A. Benckiser G.m.b.H. Chemische Fabrik. Compositions containing citric acid esters and their preparation. 3,396,121, 8-6-68, Cl. 252—312.
Mikulich, Henry J. Game apparatus having interchangeable western horseshow contest indicia. 3,395,921, 8-6-68, Cl. 273—134.
Mille, Louis, to Societe Francaise de Mecanique Liniese. Machine for bending sheet metal. 3,395,846, 8-6-68, Cl. 228—5.
Miller, Allen H.: *See*—
  Brothmnn, Abraham, Gomery, Miller, and Horowitz. 3,396,369.
Miller, Frederick L. B. Wood saws. 3,395,741, 8-6-68, Cl. 143—133.
Miller, Jack V.: *See*—
  Button, Peter A., Miller, and King. 3,396,235.
Miller, John J., to Ocean Minerals, Inc. Process of treating saline water. 3,396,104, 8-6-68, Cl. 210—54.
Miller, Rudolph W.: *See*—
  Sheridan, Anthony A., and Miller. 3,395,569.
Miller, Terry G. Wingnut device. 3,395,601, 8-6-68, Cl. 85—32.
Milwaukee Electric Tool Corp.: *See*—
  Schnettler, Jerome L. 3,395,765.
Minchenko, Hildegard M., to The Board of Trustees of the Ohio State University. Electromechanical transducer. 3,396,-285, 8-6-68, Cl. 310—8.7.
Mine Safety Appliances Co.: *See*—
  Bub, Robert A. 3,395,514.
Minks, Floyd M., to Brunswick Corp. Solid state ignition system. 3,395,684, 8-6-68, Cl. 123—148.
Minks, Floyd M., to Brunswick Corp. Electrical pulse source. 3,395,685, 8-6-68, Cl. 123—148.
Minks, Floyd M., to Brunswick Corp. Blocking oscillator circuit and capacitor discharge ignition system employing the blocking oscillator circuit. 3,395,686, 8-6-68, Cl. 123—148.
Minnis, Harvey: *See*—
  Alexander, Douglas S., Minnis, and Oliver. 3,396,205.
Minteer, Henry D., Jr., to Vesuvius Crucible Co. Molten metal handling apparatus and method of preparing for pouring molten metal. 3,395,831, 8-6-68, Cl. 222—1.
Mira Chem, Inc.: *See*—
  Schafer, Kenneth A. 3,396,067.
Miram, George V., to Varian Associates. Capacitive voltage sensing device including coaxially disposed conductive tubes and electrical discharge inhibition means. 3,396,339, 8-6-68, Cl. 324—126.
Mobarry, John W., and J. S. Warren, to Honeywell Inc. Burner control apparatus. 3,395,968, 8-6-68, Cl. 431—45.
Mobay Chemical Co.: *See*—
  Gurley, Jesse F., Jr., Harp, and Reichard. 3,396,126.
Mobil Oil Corp.: *See*—
  Andress, Harry J., Jr., and Capowski. 3,396,106.
  Burdyn, Ralph F., and Wiener. 3,396,105.
  Kerns, Clyde W. 3,396,365.
  Koehl, William J., Jr. 3,396,093.
  Manning, William F. 3,395,755.
  Scott, Eric J. Y. 3,396,206.
  Scott, Eric J. Y. 3,396,208.
  Talley, William A., Jr. 3,395,759.
Moe, Walter, to Ideal Toy Corp. Aerial projectile game comprising a target having means responsive to not being hit. 3,395,920, 8-6-68, Cl. 273—101.
Moisdon, Francois R. Water craft. 3,395,666, 8-6-68, Cl. 114—66.5.
Moll, Franz: *See*—
  Hellmig, Ehrhard, and Moll. 3,396,024.
Monsanto Co.: *See*—
  Anderson, George J., and Fantl. 3,396,049.
  Bishop, Charles F. 3,396,135.
  Blanchette, Howard H., and Osban. 3,395,625.

Monsanto Co.: *See*—Continued
  Chamberlin, Howard A., and Masson. 3,396,154.
  Christensen, Donald I. 3,396,074.
  Fuerst, Edwin W., and Mason. 3,395,821.
  Gruber, Bernard A. 3,395,986.
  Knapp, Edmund C. 3,396,038.
Montecatini Edison S.p.A.: *See*—
  Giammarco, Giuseppe. 3,395,978.
Monteleoni, Giulio, and G. Ventimiglia, to Technicolor, Inc. Method of making wide screen motion pictures. 3,396,021, 8-6-68, Cl. 96—46.
Montone Mfg. Co.: *See*—
  Curcio, John B. 3,395,939.
Moody, Robert J., to Alves Tile Co. Tile construction and expansion joint for use therein. 3,395,507, 8-6-68, Cl. 52—390.
Moorcroft, David L.: *See*—
  Eckert, Arthur F. J., and Moorcroft. 3 395,890.
Moore, George L. Pole vaulting standard. 3,395,917, 8-6-68, Cl. 272—59.
Moore, Harry W., to The Globe Tool and Engineering Co. Flier winding an armature and tang containing commutator by using a tang shield. 3,395,448, 8-6-68, Cl. 29—596.
Moore, Harry W., to The Globe Tool and Engineering Co. Progressively winding armature coils and deforming coil lead portions in commutator bar slots. 3,395,449, 8-6-68, Cl. 29—596.
Moore, William R., to The Dow Chemical Co. Dry cleaning process. 3,396,115, 8-6-68, Cl. 252—172.
Moran, Stephen F.: *See*—
  Rosenberg, Edgar N., and Moran. 3 395,665.
Morehouse, Laurence E., to McDonnell Douglas Corp. Physiologically paced ergometric system. 3,395,698, 8-6-68, Cl. 128—2.05.
Morgan, Jerry E., to International Harvester Co. Tiltable steering wheel. 3,395,930, 8-6-68, Cl. 280—87.
Morris, George V.: *See*—
  Hendrickson, Melvin C., and Morris. 3,396,232.
Morris, John W., to Pittsburgh Plate Glass Co. Glass articles. 3,396,075, 8-6-68, Cl. 161—199.
Morris, Robert B., to Westinghouse Air Brake Co. Pneumatic-hydraulic tread brake unit. 3,395,535, 8-6-68, Cl. 60—54.5.
Morse Controls Inc.: *See*—
  Houk, Richard D. 3,395,592.
  Payerle, Frank S. 3 395,429.
Morse, John F. Push-pull cable casings. 3,395,551, 8-6-68, Cl. 64—3.
Moscarski, Zenon R. Cut-off fixture. 3,395,497, 8-6-68, Cl. 51—231.
Moser, Robert V., to North American Rockwell Corp. Filter control and cleaning. 3,395,901, 8-6-68, Cl. 261—80.
Moss, Arthur W., to H. Frost & Co. Ltd. Electrical illumination devices. 3,395,475, 8-6-68, Cl. 40—106.54.
Moss, Arthur W. and E. E. Gardiner, to H. Frost & Co. Ltd. Electric illumination devices. 3,395,476, 8-6-68, Cl. 40—106.54.
Motegi, Norio: *See*—
  Kodaira, Nobuhisa, and Motegi. 3,395,433.
Motomco Inc.: *See*—
  Blondheim, William S., and Patton. 3,396,034.
Moulded Chemical Products, Inc.: *See*—
  Cox, Leory E., and Smith. 3,396,051.
Moyer, Donald W., W. C. Swanson, and J. S. Lam, to International Harvester Co. Tractor guidance system. 3,395,771, 8-6-68, Cl. 180—79.2.
Moyer, Robert C., and C. D. Stricker, to United States Steel Corp. Method of electroplating. 3,396,092, 8-6-68. Cl. 204—29.
Muhlbauer, Ernst, and W. Weiss, to Farbenfabriken Bayer Aktiengesellschaft. Process for the preparation of substituted 1,3-oxathiol-2-ones. 2,396,174, 8-6-68, Cl. 260—327.
Mullen, John J.: *See*—
  Yearwood, Donald R. 3,395,548.
Muller, Erwin A.: *See*—
  Himmelmann, Wolfgang, Riebel, and Muller. 3,396,029.
Muller, Hans. Filtration process. 3,395,801, 8-6-68, Cl. 210—68.
Mullins, Thomas R. Crawling toy. 3,395,483, 8-6-68, Cl. 46—104.
Mulquin, James J. Method for winch-controlled parachute delivery from aircraft. 3,395,880, 8-6-68, Cl. 244—137.
Mumpower, Robert C., II.: *See*—
  Toney, George P., and Mumpower. 3,396,073.
Munters & Co.: *See*—
  Meek, George W. 3 395,900.
Murdoch, Malcolm. Vibration testing method for producing a matched set of gold clubs. 2,395,571, 8-6-68, Cl. 73—67.2.
Murgas, William J., to Velvac, Inc. Detachable fender mounted rear view mirror. 3,395,883, 8-6-68, Cl. 248—480.
Murphy, Dennis J., and C. F. Balz, to Timely Products Corp. Electrically heated sock with battery supporting pouch. 3,396,264, 8-6-68, Cl. 219—211.
Murray, Alfred E., to W. S. Lovely. Cooling towers. 3,395,-515, 8-6-68, Cl. 55—257.
Musch, Paul: *See*—
  Balle, Walter, and Musch. 3,396,221.
Muszkiewicz, Herbert: *See*—
  Kopineck, Hermann-Josef, Muszkiewicz, and Schlotter. 3,395,945.
N.V. Hollandse Signaalapparaten: *See*—
  Lansink, Gerrit J. 3,396,292.
N.V. Koninklijke Pharmaceutische Fabrieken v/h Brocades-Stheeman & Pharmacia: *See*—
  Corts, Geradus J. B. 3,396,168.
N.V. Vereenigde Glasfabrieken (United Glassworks): *See*—
  Benard, Emil J. J. 3,396,002.
Nadella S.A.: *See*—
  Pitner, Alfred. 3,395,953.
Nadler, Heinrich, to Continental Gummi-Werke A.G. Apparatus for placing carcass layers on a tire building drum. 3,396,-066, 8-6-68, Cl. 156—401.
Nadler, Murray, to Esso Research and Engineering Co. Anhydrous magnesium chloride production. 3,395,977, 8-6-68, Cl. 23—91.
Nagashima, Jiro, and A. Aoki. Cooker having a steam pressure control valve. 3,395,695, 8-6-68, Cl. 126—369.
Nakagawa, Harry M., and H. W. Lakin, to United States of America, Interior. Field method for the determination of silver in soils and rocks. 3,395,987, 8-6-68, Cl. 23—230.
Nakazawa, Yuzo, to Toyotsushinki Kabushiki Kaisha. Thickness shear vibration type, crystal electromechanical filter. 3,396,327, 8-6-68, Cl. 333—72.
National Aeronautics and Space Administration: *See*—
  Webb, James E. 3,396,057.
National Cash Register Co., The: *See*—
  Klinger, Stephen R. 3,395,870.
National Distillers and Chemical Corp.: *See*—
  Bremer, Sherman L. 3,395,435.
  McClain, Dorothee M., and Mador. 3,396,190.
National Engineering Co.: *See*—
  Kauffman, John H. 3,395,731.
  Troy, Elbert C. 3,395,834.
National Mfg. Co.: *See*—
  Banse, George. 3,395,489.
National Pectin Products Co.: *See*—
  Leo, Albert J., and Bielskis. 3,396,039.
National Research Corp.: *See*—
  Brock, Frank J., and Feakes. 3,395,565.
  Giammanco, Rosario P. 3,396,059.
National Research Development Corp.: *See*—
  Broom, Ronald F. J. 3,396,344.
  Callow, Donald S. 3,396,083.
  Foster, Keith. 3,395,536.
  Rawcliffe, Gordon H., and Fong. 3,396,295.
  Young, Geoffrey T., and Handford. 3,396,157.
Navigation Computer Corp.: *See*—
  Jones, John P., Jr. 3,396,382.
Neighbors, Ralph P., to Gulf Research & Development Co. Chemical control of weeds in sugar beets. 3,396,009, 8-6-68, Cl. 71—115.
Neill, Daniel L., to Cooper Industries, Inc. Method for measuring the distance between two reflectors forming a laser cavity by metering best frequencies. 3,395,606, 8-6-68, Cl. 88—14.
Neill, Daniel L., to Cooper Industries, Inc. Apparatus for measuring the roughness of the surface of a workpiece by metering the frequency output of a laser with the workpiece forming an end reflector. 3,395,608, 8-6-68, Cl. 88—14.
Nelson, John F.: *See*—
  Bruce, Theodore B., and Nelson. 3,395,813.
New, Russel W., to Meter-All Mfg. Co., Inc. Control device for liquid dispensing machines. 3,395,832, 8-6-68, Cl. 222—14.
Newland, Gordon C., and J. W. Tamblyn, to Eastman Kodak Co. Polyethylene stabilized with a synergistic stabilizer combination. 3,396,143, 8-6-68, Cl. 260—41.
Ney, Eric A., to Dunlop Rubber Co. Ltd. Process of bonding textile materials to rubber. 3,396,065, 8-6-68, Cl. 156—335.
Nickerson, James K.: *See*—
  Claybaugh, Billy E., Nickerson, and Powers. 3,396,087.
Nicolli, Robert G. Combination trailer and picnic table. 3,395,-936, 8-6-68 Cl. 296—23.
Nieder, Rene, dit Chartrice. Spectacle mounting with biased nosed bridge and temple pieces. 3,395,964, 8-6-68, Cl. 351—63.
Nihon Denshi Kabushiki Kaisha: *See*—
  Yanaka, Takashi. 3,396,299.
Nihon Yushutsu Denkyu Kyodo Kumai: *See*—
  Suzuki, Saburo. 3,396,363.
Nilsson, Sven: *See*—
  Karlsson, Nils, Lundqvist, Nilsson, and Sivertsen. 3,396,-324.
Nippon Electric Co. Ltd.: *See*—
  Kobayashi, Haruhiro, and Oikado. 3,396,301.
  Kuroda, Hideo. 3,396,262.
  Ohashi, Yasutaka. 3,396,380.
Nishikawa, Rihei, to Toyoda Automatic Loom Works, Ltd. Apparatus for preventing warp yarn breakage in a loom. 3,395,-736, 8-6-68, Cl. 139—115.
Nonomura, Kenneth K. Apparatus and method for the marking of intelligence on a record medium. 3,396,401, 8-6-68, Cl. 346—1.
Norback, Per G., and G. W. Meek. Air and water contact body as employed in cooling towers. 3,395,903, 8-6-68, Cl. 261—112.
Nord-Aviation Societe Nationale de Constructions Aeronautiques: *See*—
  Gozlan, Albert. 3,395,539.
Nordahl, John G.: *See*—
  Richman, Peter L., Towner, and Nordahl. 3,396,347.
Nordberg Mfg. Co.: *See*—
  Peters, Helmut. 3,395,621.
Norris, Kenneth W. Locking mechanism. 3,395,873, 8-6-68, Cl. 242—107.4.
Norsk Institute For Tang-Og Tareforskning: *See*—
  Haug, Arne. 3,396,158.
North American Phillips Co., Inc.: *See*—
  Hjorth, Bo. 3,396,278.
  Kischio, Werner. 3,395,981.
  Koorneef, Jacob, and Beun. 3,395,450.
  Loos, Cornelis H., and Peek. 3,396,384.
Peloschek, Hans P. 3,395,451.
  Wesselink, Gustaaf A. 3,396,343.

North American Rockwell Corp.: *See—*
Anderson, James O., Rosenstock, and Vehrs. 3,396,391.
Buddecke, Charles L., Meyer, and Stites. 3,396,305.
Moser, Robert V. 3,395,901.
Northwest Engineering Corp.: *See—*
Allin, George S., Jr. 3,395,783.
Northwest Olivine Co.: *See—*
Gould, Herbert E. 3,396,010.
Nouel, Robert, to Inventions Finance Corp. Method and apparatus for molding. 3,395,424, 8-6-68, Cl. 18—30.
Novakovich, Milan: *See—*
Rosan, Jose, and Novakovich. 3,395,934.
Nunlist, Erwin J., to Ritter Pfaudler Corp. Wiped film evaporator. 3,396,085, 8-6-68, Cl. 202—187.
Nunlist, Erwin J., and J. S. Eyster, to Ritter Pfaudler Corp. Wiper blade assembly. 3,395,419, 8-6-68, Cl. 15—246.5.
Oak Electro/Netics Corp.: *See—*
Williams, John H. 3,395,590.
Obermann, George, to Controls Co. of America. Timer indexing mechanism. 3,395,585, 8-6-68, Cl. 74—124.
O'Berry, Richard V., and W. R. Shuler, to Star Paper Tube, Inc. Carrier for forming wound packages and method of making the same. 3,395,789, 8-6-68, Cl. 206—59.
Ocean Minerals, Inc.: *See—*
Miller, John J. 3,396,104.
Odone, Giovanni, to Paillard S.A. Telemeter. 3,395,605, 8-6-68, Cl. 88—1.
O'Donnell, William R.: *See—*
Beres, Steven W., and O'Donnell. 3,395,838.
Offer, Robert J., to Walker Mfg. Co. Filter assembly relief valves. 3,395,804, 8-6-68, Cl. 210—130.
Offer, Robert J., to Walker Mfg. Co. Base for different filters. 3,395,808, 8-6-69, Cl. 210—444.
Ohashi, Yasutaka, to Nippon Electric Co., Ltd. Digital-analogue signal converter. 3,396,380, 8-6-68, Cl. 340—347.
Ohio State University, The Board of the Trustees of the: *See—*
Minchenko, Hildegard M. 3,396,285.
Ohtsu, Takao: *See—*
Sanga, Seiji, Ohtsu, and Sekido. 3,395,567.
Oikado, Taizo: *See—*
Kobayashi, Haruhiro, and Oikado. 3,396,301.
Olcott, Joseph S., to Corning Glass Works. Method for production of glass article having increased mechanical strength. 3,395,998, 8-6-68, Cl. 65—30.
Olich, Eugene E.: *See—*
Trockl, Thomas, and Olich. 3,395,781.
Olin Mathieson Chemical Corp.: *See—*
Speed, Sidney E. 3,396,048.
Olinkraft, Inc.: *See—*
Graser, Earl J. 3,395,791.
Oliver, Brian H.: *See—*
Alexander, Douglas S., Minnis, and Oliver. 3,396,205.
Olson, Donald M., granted to U.S. Atomic Energy Commission under provisions of 42 U.S.C. 2182. Isotope-powered X-ray instrument for detecting the arrival of an interface in a pipeline. 3,396,272, 8-6-68, Cl. 250—43.5.
Olson, James R., to Eastman Kodak Co. Development and coating of new zinc oxide photoconducting recording systems. 3,396,016, 8-6-68, Cl. 96—1.8.
Olsson, Karl B. Combustion apparatus. 3,395,966, 8-6-68, Cl. 431—22.
Orbit Instrument Corp.: *See—*
Gersten, Milton. 3,395,589.
Orr, Samuel F. D.: *See—*
Ford, Michael A., and Orr. 3,396,403.
Osban, William R.: *See—*
Blanchette, Howard M., and Osban. 3,395,625.
Ostbergs Fabriks AB: *See—*
Larsson, Lars B., and Johansson. 3,395,637.
Otis Engineering Corp.: *See—*
Fredd, John V. 3,395,618.
Kelly, Warner M., and Regan. 3,395,758.
Tamplen, Jack W. 3,395,728.
Overby, Grant E., and E. H. Zahn. Fixed-removable dental splinting method and the splints and fasteners used in practicing the method. 3,395,455, 8-6-68, Cl. 32—6.
Ovshinsky, Stanford R., to Energy Conversion Devices, Inc. Method of making solid state relay devices from tellurides. 3,395,445, 8-6-68, Cl. 29—569.
Owen, Louis L., to General Electric Co. Speed responsive and control systems for rotors. 3,395,534, 8-6-68, Cl. 60—39.29.
Owens-Corning Fiberglas Corp.: *See—*
Gambill, Ulysses T., and Thomas. 3,396,070.
Owens-Illinois, Inc.: *See—*
Baker, Theodore C., Mathias, and Sager. 3,395,573.
Belcher, Samuel L., Biglin, Grothjan, and Koeniger. 3,395,826.
Ozalid Co. Ltd.: *See—*
Landau, Raphael. 3,396,046.
Paape, Klaus: *See—*
Ackermann, Karl, and Paape. 3,395,871.
Packaging Corp of America: *See—*
Klein, Clarence F., and Du Mond. 3,395,673.
Paillard S.A.: *See—*
Odone, Giovanni. 3,395,605.
Palesi, Marie, and R. J. Palesi. Apparatus for attaching components to a circuit board. 3,395,439, 8-6-68, Cl. 29—203.
Palesi, Richard J.: *See—*
Palesi, Marie, and Richard. 3,395,439.
Pallos, Ferenc M., and A. E. Pavlath, to Stauffer Chemical Co. Process for preparing 1,1,2-tetrachloro-2-fluoroethane and 1,1,1,-trichloro-2,2-difluorethane. 3,396,202, 8-6-68, Cl. 260—653.
Paniccia, Sally L.: *See—*
Dersch, Fritz, and Paniccia. 3,396,022.
Parker-Kalon Corp.: *See—*
Sklerski, Edwin J. 3,395,603.
Parker, Kenneth B., Jr., to Leeds & Northrup Co. Input-sequencing arrangements for multi-point recorders. 3,396,404, 8-6-68, Cl. 346—34.
Parker, Wilfred: *See—*
Hasler, William S., Evans, Dawson and Parker. 3,395,432.
Parkinson, Crosby & Works, Inc.: *See—*
Crosby, Hartzell L., and Parkinson. 3,396,076.
Parkinson, John R.: *See—*
Crosby, Hartzell L., and Parkinson. 3,396,076.
Parsons, Robert H., L. J. Kormendy, and D. S. Jackson, to Canadian Breweries Ltd. Method of fermentation of wort. 3,396,031, 8-6-68, Cl. 99—48.
Pask, George: *See—*
Petrie, James A., and Pask. 3,395,857.
Passavant-Werke: *See—*
Schramm, Paul, Schneider, and Heidler. 3,395,541.
Pastor, Ricardo C.: *See—*
Malman, Theodore H., Hoskins, Soffer, Pastor, and Pearson. 3,396,119.
Patrignani, Leonida, to Manufacture de Nilebrequin de Lorette (Mavilor). Electric motor having a frusto-conical rotor portion. 3,396,288, 8-6-68, Cl. 310—43.
Patterson, Richard L., to Union Carbide Corp. One-piece "foldover" battery terminal. 3,396,058, 8-6-68, Cl. 136—134.
Patton, Abner P.: *See—*
Blondheim, William S., and Patton. 3,396,034.
Paulstra, Levallois-Perret: *See—*
Julien, Maurice F. A. 3,395,769.
Pavlath, Attila E.: *See—*
Pallos, Ferenc M., and Pavlath. 3,396,202.
Pavlovich, Edward C.: *See—*
Wiltshire, Arthur J., and Pavlovich. 3,395,735.
Payerle, Frank S., to Morse Controls Inc. End fittings for push-pull cable cores. 3,395,429, 8-6-68, Cl. 24—125.
Payne, Ivan S., to Lansing Bagnall Ltd. Plug and socket for the mounting of an assembly of electrical components. 3,396,313, 8-6-68, Cl. 317—101.
Payne, Willie L., to A. W. Perdue & Son, Inc. Apparatus for extracting oil from soybeans. 3,395,806, 8-6-68, Cl. 210—345.
Pearson, Maria A.: *See—*
Malman, Theodore H., Hoskins, Soffer, Pastor, and Pearson. 3,396,119.
Peek, Johannes B. H.: *See—*
Loos, Cornelis H., and Peek. 3,396,384.
Peele, Robert S. Radiator cap remover. 3,395,957, 8-6-68, Cl. 312—1.
Pellecchia, Louis, to United States of America, Navy. Synchro system having single and multiple speed transmitters and receivers. 3,396,321, 8-6-68, Cl. 318—24.
Peloschek, Hans P., to North American Philips Co., Inc. Method of manufacturing multiple magnetic heads having accurately defined gap heights. 3,395,451, 8-6-68, Cl. 29—603.
Pennsalt Chemicals Corp.: *See—*
Popoff, Ivan C. 3,396,005.
Penoyer, Charles E., to The Sherwin-Williams Co. Superbodied oils. 3,396,181, 8-6-68, Cl. 260—407.
Perdue, A. W., & Son, Inc.: *See—*
Payne, Willie L. 3,395,806.
Perkin-Elmer Corp., The: *See—*
De Mey, Charles F., II. 3,396,402.
Perkin-Elmer Ltd.: *See—*
Ford, Michael A., and Orr. 3,396,403.
Perry, George H.: *See—*
Del Vecchio, George D., and Perry. 3,395,913.
Perry, Norman L., and M. W. Pollock, to Argus Chemical Corp. Polyvinyl chloride stabilized with mixtures comprising magnesium salt, zinc salt and polyol. 3,396,132, 8-6-68, Cl. 260—23.
Perstorp Aktiebolag: *See—*
Lindkvist, Eirik. 3,395,989.
Peters, Helmut, to Nordberg Mfg. Co. Hydraulic cylinder support. 3,395,621, 8-6-68, Cl. 92—169.
Peters, Robert W., to H. J. Gorski. Concentric stator windings and method of winding. 3,396,290, 8-6-68, Cl. 310—180.
Petrie, James A., and G. Pask, to Rolls-Royce Ltd. Bearing assembly. 3,395,857, 8-6-68, Cl. 230—116.
Petrig, David, to Alabama Metal Industries Corp. Lath wall construction. 3,395,506, 8-6-68, Cl. 52—349.
Petrol Injection Ltd.: *See—*
Jackson, Harold E. 3,395,682.
Jackson, Harold E. 3,395,683.
Petrolite Corp.: *See—*
Pettefer, Robert L. 3,396,100.
Petrosky, Willard L., to John L. Doré Co. Method of splicing a gasket jacket. 3,395,440, 8-6-68, Cl. 29—428.
Petrow, Vladimir: *See—*
Burn, Derek, Coombs, and Petrow. 3,396,179.
Petry, Eduard C., to Fabri-Tek Inc. Component sizing apparatus. 3,395,794, 8-6-68, Cl. 209—73.
Pettefer, Robert L., to Petrolite Corp. Process for separating oil-water mixtures. 3,396,100, 8-6-68, Cl. 208—188.
Pfetzing, Henry V., to Skil Corp. Gasoline powered hammer. 3,395,688, 8-6-68, Cl. 123—180.
Pfizer, Chas., & Co., Inc.: *See—*
Bennetch, Leonard M. 3,395,983.
Philco-Ford Corp.: *See—*
Wolfe, Paul G. 3,396,309.
Phillips Petroleum Co.: *See—*
Eddy, William R. 3,395,525.
Hill, Harold W., Jr., and Edmonds. 3,396,110.
McCarthy, William C., and Brinkmeyer. 3,395,867.
Remke, Marvin A., and Lyte. 3,395,923.
Stoller, Frederick L. 3,395,547.
Wofford, Clinton F., Busler, and Hsieh. 3,396,125.

Piaget, Robert E. Coupling for cables or the like. 3,396,360, 8-6-68, Cl. 339—94.
Piaggio & Co. S.p.A.: *See—*
Casini, Vittorio. 3,395,587.
Piccone, Marshall, to United States of America, Army. Incendiary composition consisting of titanium, aluminum-magnesium alloy, and inorganic oxidizer salt. 3,396,060, 8-6-68, Cl. 149—42.
Piezo Technology Inc.: *See—*
Horton, William H. 3,396,287.
Pilgrim, Ollie P.: *See—*
Mazurkevics, Anatolijs, and Pilgrim. 3,395,574.
Pilkington Bros. Ltd.: *See—*
Baker, Henry W. 3,396,001.
Loukes, David G. 3,395,996.
Wilde, Dennis, and Kenworthy. 3,395,943.
Pipkins, David D.: *See—*
Despota, Angelo F., Pipkins, and Henkel. 3,396,218.
Piret, Jean, to Societe anonyme: Simca Automobiles. Hydropneumatic suspension devices, particularly for automobile vehicles. 3,395,931, 8-6-68, Cl. 280—124.
Pitner, Alfred, to Nadella S.A. Device for positioning sealing means for an antifriction bearing. 3,395,953, 8-6-68, Cl. 308—187.1.
Pittsburgh Plate Glass Co.: *See—*
Morris, John W. 3,396,075.
Pizer, Ron: *See—*
Ballard, Bruce, and Pizer. 3,396,358.
Plaskan, Laurance F., to Amity Leather Products Co. Cigarette case. 3,395,787, 8-6-68, Cl. 206—41.
Plemich, John J.: *See—*
Vienna, Paul C., Plemich, and Gaynor. 3,396,114.
Plzak, Louis F., Jr. Surgical tube. 3,395,711, 8-6-68, Cl. 128—351.
Poirette Corsets, Inc.: *See—*
Laguzzi, Mario. 3,395,712.
Polaroid Corp.: *See—*
Haas, Howard C. 3,396,030.
Kagan, Sholly. 3,396,233.
Taylor, Lloyd D. 3,396,026.
Polinko, George, Jr., to General Electric Co. Method of forming a high temperature-resistant bond between aluminum and a dissimilar metal. 3,395,443, 8-6-68, Cl. 29—471.7.
Pollock, Mark W.: *See—*
Perry, Norman L., and Pollock. 3,396,132.
Polymer Corporation Ltd.: *See—*
Alexander, Douglas S., Minnis, and Oliver. 3,396,205.
Polysius G.m.b.H.: *See—*
Kopineck, Hermann-Josef, Muszkiewicz, and Schlotter. 3,395,945.
Pook, Harold M. Laying out of printed characters such as letters or numerals. 3,395,632, 8-6-68, Cl. 95—85.
Pope, Richard D., Jr., and S. L. Faught, to Cypress Gardens Skis, Inc. Tracking ski. 3,395,411, 8-6-68, Cl. 9—310.
Popoff, Ivan C., to Pennsalt Chemicals Corp. Methods of affecting plant growth. 3,396,005, 8-6-68, Cl. 71—70.
Porter, John F.: *See—*
Weil, Edward D., and Porter. 3,396,201.
Poshkus, Algirdas C.: *See—*
Magnotta, Frank A., and Poshkus. 3,396,194.
Powanda, Stephen, 10% to H. Siddley. Vehicle body sander. 3,395,495, 8-6-68, Cl. 51—170.
Powers, John M.: *See—*
Claybaugh, Billy E., Nickerson, and Powers. 3,396,087.
Prater, Earle F., to Roberts Consolidated Industries, Inc. Carpet cutter. 3,395,453, 8-6-68, Cl. 30—293.
Prater, Earle F.: *See—*
Hill, Harvey J., and Prater. 3,395,420.
Pratt, Henry: *See—*
Fawkes, Donald G. 3,395,886.
Prentice, E. V., Co.: *See—*
Taylor, Frederick T. 3,395,459.
Prevue Display Service, Inc.: *See—*
Look, Arthur J. 3,395,472.
Procter & Gamble Co., The: *See—*
Liepa, Alexander L. 3,396,036.
McCarty, Charles B., and Theile. 3,396,204.
Producers Chemical Co.: *See—*
Hill, William A. 3,396,107.
Progressive Engineering, Inc.: *See—*
Swanson, Kenneth P. 3,395,427.
Prosen, Richard J., to Honeywell Inc. Biaxially anisotropic magnetic thin film structure with magnetic discontinuities. 3,396,047, 8-6-68, Cl. 117—8.5.
Prucha, Carl T.: *See—*
Harwood, Frank S., and Prucha. 3,395,422.
Purcell, Robert C.: *See—*
Wolf, Burton M., Reber, and Purcell. 3,395,744.
Puritan Compressed Gas Corp.: *See—*
Beasley, Noel F. 3,395,699.
Pursel, Harry H.: *See—*
Abbey, Charles R., Pursel, and Scidmore. 3,396,240.
Pusch, Gunter: *See—*
Enders, Heinz, and Pusch. 3,396,050.
Quality Tool & Die Co., The: *See—*
Bushi, Michael. 3,395,562.
Quick Cable Corp.: *See—*
Shannon, John K. 3,396,362.
Radio Corp. of America: *See—*
Corson, Carl R., and Hoffman. 3,396,314.
Glicksman, Maurice, and Steele. 3,396,283.
Kiesling, John D. 3,396,394.
Sheng, Alfredo, and Hebert. 3,396,282.
Raffel, Bernard D.: *See—*
Kelly, Charles M., and Raffel. 3,396,400.
Ragas, Frank: *See—*
Sekmakas, Kazys, and Ragas. 3,396,209.
Rand, Myron J., to Bell Telephone Laboratories, Inc. Method for coating semiconductor devices with silicon oxide. 3,396,052, 8-6-68, Cl. 117—201.
Randle, Jack, to Ernest Turner & Co. (Salford) Ltd. Apparatus for flame singeing of textiles. 3,395,430, 8-6-68, Cl. 26—3.
Rankin, John A., to V-M Corp. Switch device with improved interlock structure. 3,396,247, 8-6-68, Cl. 200—5.
Rastrelli, Leonard U., and E. L. Anderson, to United States of America, Navy. Elastomeric strain module and method of calibration thereof. 3,395,564, 8-6-68, Cl. 73—1.
Ratcliff, Ralph A. Over-center load binder and gripping device. 3,395,892, 8-6-68, Cl. 254—79.
Ratliff, Harvey L., Jr., to Jetru Inc. Method of making lenses for wide-angle oculars. 3,395,498, 8-6-68, Cl. 51—284.
Rawcliffe, Gordon H., and W. Fong, to National Research Development Corp. Rotary electric machines. 3,396,295, 8-6-68, Cl. 310—162.
Ray, Daniel D., to The Goodyear Tire & Rubber Co. Reinforcement cord and method of making same. 3,395,529, 8-6-68, Cl. 57—153.
Raygo, Inc.: *See—*
Garis, Gordon O., and Roettger. 3,395,626.
Rayner, Eric T.: *See—*
Yeadon, David A., Rayner, Verburg, Hooper, Dollear, and Dupuy. 3,396,129.
Read Corp.: *See—*
Messerly, Gary A., Royer, and Gilgore. 3,395,653.
Ready, John F., to Honeywell Inc. Light deflector. 3,395,961, 8-6-68, Cl. 350—160.
Reagan, James E.: *See—*
Kelly, Warner M., and Reagan. 3,395,758.
Reber, Jerry K.: *See—*
Wolf, Burton M., Reber, and Purcell. 3,395,744.
Rees, William W., and W. H. Russell, to Eastman Kodak Co. Piazine antifoggants for silver halide emulsions. 3,396,023, 8-6-68, Cl. 96—67.
Reichard, Edward L.: *See—*
Gurley, Jesse Fred, Jr., Harp, and Reichard. 3,396,126.
Reimers-Getriebe AG: *See—*
Kirchner, Herbert. 3,395,586.
Remke, Marvin A., and F. G. Lyte, to Phillips Petroleum Co. Self-lubricating stuffing box. 3,395,923, 8-6-68, Cl. 277—59.
Reppe, Walter, and A. Magin, to Badische Anilin- & Soda-Fabrik Aktiengesellschaft. Production of esters of unsaturated aliphatic dicarboxylic acids. 3,396,191, 8-6-68, Cl. 260—485.
Research Corp.: *See—*
Marmor, Solomon. 3,396,178.
Rexall Drug and Chemical Co.: *See—*
Bolger, James W. 3,396,165.
Bolger, James W. 3,396,166.
Rhodes, Carl D., to Fieldcrest Mills, Inc. Stable fringe fabric and method of making same. 3,395,738, 8-6-68, Cl. 139—385.
Rhodes, Robert A.: *See—*
Davis, Edwin N., Rhodes, and Wallen. 3,396,082.
Rhodes, Travis M. Pattern control apparatus for yarn feed. 3,395,659, 8-6-68, Cl. 112—79.
Ribback, Erich. Forging machine. 3,395,563, 8-6-68, Cl. 72—408.
Rice, Robert B., Jr., to Campbell Auto-Pour Engineering. Gas feed to pressure pour apparatus. 3,395,833, 8-6-68, Cl. 222—61.
Richman, Peter L., to Weston Instruments, Inc. Phase shift oscillator with error corrector. 3,396,346, 8-6-68, Cl. 331—135.
Richman, Peter L., W. T. Towner, and J. G. Nordahl, to Weston Instruments, Inc. Precision oscillator. 3,396,347, 8-6-68, Cl. 331—136.
Richmond, Alvin: *See—*
Legal, Casimer C., Jr., and Richmond. 3,396,004.
Rider, Bernard, to Litton Systems, Inc. Technique for varying the bandwidth of a spin resonant device. 3,396,349, 8-6-68, Cl. 333—70.
Riebel, Alexander: *See—*
Himmelmann, Wolfgang, Riebel, and Muller. 3,396,029.
Riegel Textile Corp.: *See—*
Hervey, Laurence R. B. and George. 3,395,708.
Riggs, Robert F., and D. L. Teague, to Sperry Rand Corp. Proximity warning system. 3,396,390, 8-6-68, Cl. 343—11.
Riley, Robert M., to International Harvester Co. Internal combustion engine. 3,395,690, 8-6-68, Cl. 123—191.
Rittenbach, Otto E.: *See—*
Fishbein, William, and Rittenbach. 3,396,392.
Ritter, George F.: *See—*
Carson, Frank J., Ferguson, and Ritter. 3,396,000.
Ritter Pfaudler Corp.: *See—*
Hogan, William J. 3,396,274.
Nunlist, Erwin J. 3,396,085.
Nunlist, Erwin J., and Eyster. 3,395,419.
Weisberg, Eugene, and Lenox. 3,395,654.
Roach, Donald E., to McDowell-Wellman Engineering Co. Combination ball check and needle valve. 3,395,725, 8-6-68, Cl. 137—512.15.
Roberts Consolidated Industries, Inc.: *See—*
Hill, Harvey J., and Prater. 3,395,420.
Prater, Earle F. 3,395,453.
Robertshaw Controls Co.: *See—*
Demi, Roy C. 3,395,887.
Robinson, William M., to Cornell-Dubilier Electric Corp. Thermally fused capacitor. 3,396,319, 8-6-68, Cl. 317—247.
Rockwell-Standard Co.: *See—*
Cox, Frank T., and Williams. 3,395,584.
Rodosta, John. Automobile lift. 3,395,777, 8-6-68, Cl. 187—8.59.
Roedel, Hilmar, and E. Siggel, to Verinigte Glanzstoff-Fabriken A.G. Production of mixed polyesters from the diglycol esters of aromatic dicarboxylic acids and phosphoric acid. 3,396,149, 8-6-68, Cl. 260—75.

Roehr Products, Inc.: *See—*
Brown, Alexander M., and Carrico. 3,395,696.
Roettger, Raymond F.: *See—*
Garis, Gordon O., and Roettger. 3,395,626.
Rohwer, Robert K.: *See—*
George, Raymond S., and Rohwer. 3,396,200.
Roller Bearing Co. of America: *See—*
Barr, Victor L., and Schmidt. 3,395,951.
Rolls-Royce Ltd.: *See—*
Petrie, James A., and Pask. 3,395,857.
Roney, John W., to Rucker Mfg. Co. Tandem collector assembly for overhead electrification system. 3,396,246, 8-6-68, Cl. 191—58.
Rooklidge, Thomas C. Crop protecting plastic dispensing mechanism. 3,395,485, 8-6-68, Cl. 47—20.
Rosaen Filter Co., The: *See—*
Rosaen, Nils O. 3,395,802.
Rosaen, Nils O., to The Rosaen Filter Co. Fluid filter condition indicators. 3,395,802, 8-6-68, Cl. 210—90.
Rosan, Jose, and M. Novakovich. Fittings for high pressure fluid lines. 3,395,934, 8-6-68, Cl. 285—23.
Rosema, Thomas J., to General Research, Inc. Apparatus for drying coated sheet stock. 3,395,786, 8-6-68, Cl. 198—134.
Rosenberg, Edgar N., and S. F. Moran, to United States of America, Navy. Deep water recovery. 3,395,665, 8-6-68, Cl. 114—51.
Rosenberger, Raymond A. Strike plate. 3,395,935, 8-6-68, Cl. 292—341.13.
Rosenstock, David: *See—*
Anderson, James O., Rosenstock, and Vehrs. 3,396,391.
Rotron Mfg. Co., Inc.: *See—*
Grad, Peter P. 3,395,437.
Zoehfeld, Gunther. 3,395,853.
Roulements Minatures, S.A.: *See—*
Boillat, Philippe. 3,395,954.
Roussel-UCLA: *See—*
Martel, Jacques, Toromanoff, and Huynh. 3,396,188.
Royer, Wayne H.: *See—*
Messerly, Gary A., Royer, and Gilgore. 3,395,653.
Rubber and Wheel Industries (Proprietary) Ltd.: *See—*
Kuster, Hans G. 3,395,864.
Rubin, Frank R. Method and means for cartilage reshaping. 3,395,709, 8-6-68, Cl. 128—305.
Rucker Mfg. Co.: *See—*
Roney, John W. 3,396,246.
Rudinger, Klaus: *See—*
Braun, Dieter, and Rudinger. 3,395,595.
Ruegg, Rudolf, to Wyss, Escher Aktiengesellschaft. Scatter type pneumatic sifter. 3,395,796, 8-6-68, Cl. 209—139.
Ruel, Normand: *See—*
Lague, Francois, and Ruel. 3,395,561.
Ruf, Walter. Amphibious motor vehicle. 3,395,672, 8-6-68, Cl. 115—1.
Rusche, Fredric. Method for driving thin wall pipe piles. 3,395,543, 8-6-68, Cl. 61—53.7.
Russ, Robert G.: *See—*
Schecter, Roger M., and Russ. 3,395,516.
Russell, Fred J., R. L. Armstrong, and F. L. Jennie; said Armstrong & Jennie, assors. to said Russell. Key-actuated mechanism with emergency key. 3,395,558, 8-6-68, Cl. 70—364.
Russell, Hilary F. Self-locking safety support for ladders. 3,395,776, 8-6-68, Cl. 182—108.
Russell, William H.: *See—*
Rees, William W., and Russell. 3,396,023.
Rutland, James W., and R. R. Clary III, to Cypress Gardens Skis, Inc. Water ski. 3,395,410, 8-6-68, Cl. 9—310.
Rydstrom, Hans F. Image reproducing device for remotely controlled presentation of an image. 3,395,471, 8-6-68, Cl. 40—28.
Rysti, Alpo, to Sateko Oy. Arrangement of sorting device for timber, in particular for logs. 3,395,785, 8-6-68, Cl. 198—38.
SCM Corp.: *See—*
Leavens, Dwight E., and Derfer. 3,396,182.
Satterfield, Walter R. 3,396,044.
SKF Industries, Inc.: *See—*
Gunder, Gottfried E. 3,395,926.
S.S.S. Patents Ltd.: *See—*
Clements, Herbert A. 3,395,782.
SW Industries, Inc.: *See—*
Hess, Ralph A. 3,395,636.
Sager, James R.: *See—*
Baker, Theodore C., Mathias, and Sager. 3,395,573.
Sakai, Fumio: *See—*
Teshi, Haruo, and Sakai. 3,395,965.
Sakai, Michihiko, K. Konishi, and M. Kato, to Takeda Chemical Industries Ltd. O,O-di loweralkyl S-[1-lower-alkoxy carbonyl-2-(N-lower-alkoxy carbonyl-N-loweralkyl-carbonyl)-ethyl] phosphorodithioates. 3,396,212, 8-6-68, Cl. 260—938.
Salem Tool Co., The: *See—*
Young, William G., and Horning. 3,395,940.
Young, William G., Horning, and Carothers, 3,395,941.
Salva, Juan M.: *See—*
Vander Linden, Ronald C., Salva, and Smith. 3,396,173.
Salvesen, William. Superimposing photographic device. 3,395,629, 8-6-68, Cl. 95—1.1.
Salvi, Antoine, to Commissariat a l'Energie Atomique. Magnetic resonance magnetometers for measuring weak magnetic fields from aboard a moving vehicle, as a plane. 3,396,229, 8-6-68, Cl. 324—.5.
Sanders, Edgar R. Knife structure. 3,395,742, 8-6-68, Cl. 146—78.
Sandvikens Jerverks AB: *See—*
Wirfelt, Sven A. O. 3,395,434.
Sanford, Lloyd C.: *See—*
Anderson, Russell K., and Sanford. 3,396,241.
Sanga, Seiji, T. Ohtsu, and F. Sekido, to Japan Gasoline Co., Ltd. Gas chromatograph. 3,395,567, 8-6-68, Cl. 73—23.1.
Sangamo Electric Co.: *See—*
Brothman, Abraham, Gomery, Miller, and Horowitz. 3,396,369.
Sarro, Michele. Spinning disk toy. 3,395,482, 8-6-68, Cl. 46—47.
Sateko Oy: *See—*
Rysti, Alpo. 3,395,785.
Satra Societe Achat et Transactions: *See—*
Jamon, Henri H. 3,396,353.
Satterfield, Walter R., to SCM Corp. Temporary high temperature protective coating agents for metals. 3,396,044, 8-6-68, Cl. 106—66.
Sawada, Toshio, to Aisin Seiki Kabushiki Kaisha. Mechanism for selectin gpatterns in an automatic pattern stitch swing machine. 3,395,593, 8-6-68, Cl. 74—569.
Scandura Inc.: *See—*
Longley, Harold. 3,395,527.
Schafer, Halvert, to General Electric Co. Process for the conversion of calcium acid phosphate dihydrate to calcium acid phosphate. 3,395,979, 8-6-68, Cl. 23—108.
Schafer, Kenneth A., to Mira Chem, Inc. Resinous product simulating onyx. 3,396,067, 8-6-68, Cl. 161—5.
Schaff, Paul W.: *See—*
Kolze, Lawrence A., Schaff, and Benedetti. 3,395,885.
Schalge, Roger D.: *See—*
Davidson, Frederic A., Jr., and Schalge. 3,395,501.
Schecter, Roger M., and R. G. Russ, to United States of America, Navy. Airborne aerosol collector. 3,395,516, 8-6-68, Cl. 55—270.
Scheel, Kurt C., and H. Ebsen, to Guano-Werke Aktiengesellschaft (vormals Ohlendorff'sche und Nerck'sche Werke). Method of ammoniating phosphate rock. 3,396,003, 8-6-68, Cl. 71—34.
Schefczik, Ernst: *See—*
Braun, Willy, and Schefczik. 3,396,172.
Schenker, Karl, to Ciba Corp. 2:3:4:5 Tetrahydro-1:4-methano-1H-3-benzazepins. 3,396,171, 8-6-68, Cl. 260—326.3
Scherer, Robert C., to D. H. Baldwin Co. Electric guitar bridge. 3,396,284, 8-6-68, Cl. 310—8.3.
Schickle, Gerhard: *See—*
Krank, Wolfgang, and Schickle. 3,396,350.
Schiewater, Friedrich W.: *See—*
Bartholome, Ernst, Lehrer, and Schierwater. 3,396,207.
Schjeldahl, G. T., Co.: *See—*
MacFadden, John A., and Buresch. 3,395,877.
Schlackman, Leo L.: *See—*
Blau, Arthur A., and Schlackman. 3,395,508.
Schlicht, Gunther: *See—*
Lange, Hans, and Schlicht. 3,395,756.
Schlicht, Erika M. E.: *See—*
Lange, Hans, and Schlicht. 3,395,756.
Schloemann Aktiengesells: *See—*
Hess, Walter. 3,395,751.
Schlotter, Claus: *See—*
Kopineck, Hermann-Josef, Muszkiewicz, and Schlotter. 3,395,945.
Schlumberger Technology Corp.: *See—*
Lee, Jimmy G. 3,396,330.
Schmidt, Henry K.: *See—*
Barr, Victor L., and Schmidt. 3,395,951.
Schmoeger, Ralph F., to Westinghous Air Brake Co. Screw means for attaching mounting brackets and cylinder heads to a power cylinder body. 3,395,620, 8-6-68, Cl. 92—161.
Schmukler, Seyour, to General Electric Co. Reactive polyphenylene oxide composition. 3,396,146, 8-6-68, Cl. 260—47.
Schnabel, Fred C. All purpose clip. 3,395,428, 8-6-68, Cl. 24—81.
Schnabel, Fred C. Paint can attachment device. 3,395,828, 8-6-68, Cl. 220—90.
Schneider, Jean-Claude, to Fabrique d'Horlogerie Chs. Tissot et Sils S.A. Time piece hairspring end fastening means. 3,395,532, 8-6-68, Cl. 58—115.
Schneider, Joachim: *See—*
Schramm, Paul, Schneider, and Heidler. 3,395,541.
Schneider, Karl-Heinz: *See—*
Kind, Wilhelm, and Schneider. 3,396,249.
Schnell, Albert: *See—*
Haufler, Gerhard, Schnell, and Schweikhardt. 3,395,630.
Schnettler, Jerome L., to Milkwaukee Electric Tool Corp. Small rotary hammer. 3,395,765, 8-6-68, Cl. 173—13.
Schramm, Paul, J. Schneider, and J. Heidler; said Schramm and said Heidler assors., to Passavant-Werke. Shut-off plates for controlling the flow of liquids. 3,395,541, 8-6-68, Cl. 61—28.
Schubert, Helmuth, and J. Vitins, to Aktiengesellschaft Brown, Boveri & Cie. Gas blast circuit breaker having both bulged-out portion in hollow insulator and gas flow guide tube adjacent switching members. 3,396,252, 8-6-68, Cl. 200—148.
Schuetze, Clarke E.: *See—*
Adams, Leon M., and Schuetze. 3,396,116.
Schurch, Edward C. Hydrometer. 3,395,582, 8-6-68, Cl. 73—446.
Schuss, Jack A., to Combustion Engineering, Inc. Automatic first control for coal fired furnace. 3,395,657, 8-6-68, Cl. 110—22.
Schwartz, Norman V.: *See—*
Lautenschlaeger, Friedrich K., and Schwartz. 3,396,175.
Schwarz Bioresearch, Inc.: *See—*
Laufer, Louis, and Town. 3,396,156.
Schwegler, Roy F., to Ametek, Inc. Ironing machine. 3,395,468, 8-6-68, Cl. 38—55.
Schweikhardt, Friedrich: *See—*
Haufler, Gerhard, Schnell, and Schweikhardt. 3,395,630.
Schweizerische Industrie-Gasellschaft: *See—*
Kopp, Georg. 3,395,837.

Scidmore, Don L.: *See—*
Abbey, Charles R., Pursel, and Scidmore. 3,396,240.
Scott, Eric J. Y., to Mobil Oil Corp. High temperature method for producing styrene and ethylbenzene. 3,396,206, 8-6-68, Cl. 260—669.
Scott, Eric J. Y., to Mobil Oil Corp. High temperature methylation of olefins. 3,396,208, 8-6-68, Cl. 260—683.
Scott, O. M., & Sons Co., The: *See—*
Long, John A., Mayer, and McVey. 3,395,487.
Scoville, Clyde W. Storage device and operating mechanism for a tarpaulin for the protection of a playing field. 3,395,918, 8-6-68, Cl. 273—27.
Sebree, June L. Sound producing ball. 3,395,462, 8-6-68, Cl. 35—8.
Secretary of State for Defense in the Government of the United Kingdom of Great Britain and Northern Ireland: *See—*
Dewsnap, George G., George, and Heathcote. 3,396,220.
Seeff, Morris, to Steel Rolling Corp. (Africa) (Proprietary). Metal corrugated roofing sheets. 3,395,438, 8-6-68, Cl. 29—183.
Seifert, Kurt. Reverberation chamber with partly flexible movable walls. 3,395,774, 8-6-68, Cl. 181—.5.
Sekido, Fujihiko: *See—*
Sanga, Seiji, Ohtsu, and Sekido. 3,395,567.
Sekmakas, Kazys, and F. Ragas, to De Soto, Inc. Air drying ethers of monohydric polyallylethers and copolymer containing alkoxyalkylated aminotriazine transesters. 3,396,209, 8-6-68, Cl. 260—856.
Sel-Rex Corp.: *See—*
Duva, Robert. 3,396,042.
Sennewald, Kurt, H. Erpenbach, W. Vogt, and H. Joest, to Knapsack Aktiengesellschaft. Process for separating 2-chlorobutadiene-(1,3) from trans-2-chlorobutene-(2). 3,396,089, 8-6-68, Cl. 203—70.
Sepall, Ola: *See—*
Logan, Kenneth C., and Sepall. 3,396,069.
Serizawa, Ryunosuke, K. Tanaka, and O. Takamatu. Electrical surface switch having improved biasing means. 3,396,252, 8-6-68, Cl. 200—86.
Serratoni, Angelo R.: *See—*
Serratoni, Paul J. and A. R., and Chisnell. 3,395,612.
Serratoni, Paul J. and A. R., and D. P. Chisnell, to Chrysler Corp. Method of and apparatus for templating. 3,395,612, 8-6-68, Cl. 88—24.
Servo Corp. of America: *See—*
Gallagher, Cornelius A. 3,396,271.
Seyl, Peter, to Winkler & Dunnebier Maschinenfabrik und Eisen-Giesserei. Device for folding flaps of envelopes and the like. 3,395,624, 8-6-68, Cl. 93—61.
Shaeffer, Robert J. ,to Teleflex, Inc. Remote control assembly construction. 3,395,591, 8-6-68, Cl. 74—501.
Shaffer, James H.: *See—*
Grimes, Warren R., and Shaffer. 3,395,991.
Shannon, John K., to Quick Cable Corp. Terminal clamp. 3,396,302, 8-6-68, Cl. 339—227.
Shartz, Clay M., to United States of America, Navy. Heptafluoropropyl diphenylphosphine and the preparation thereof. 3,396,197, 8-6-68, Cl. 260—606.5.
Shelby, John. Brake for perambulator. 3,395,778, 8-6-68, Cl. 188—20.
Shell Oil Co.: *See—*
Caruso, Gerard P. 3,396,108.
Stoutamire, Donald W. 3,396,213.
Shelly Bros., Inc.: *See—*
Conti, John D. 3,395,652.
Sheng, Alfredo, and E. Hebert, to Radio Corp. of America. Time delay circuit employing logic gate. 3,396,282, 8-6-68, Cl. 307—208.
Sheridan, Anthony A., and R. W. Miller. Dynamic curvature sensing and measuring device. 3,395,569, 8-6-68, Cl. 73—35.
Sherlock, Harrison B., and N. E. Stanley, to McDonnell Aircraft Corp. Process for making semisolid cryogens. 3,395,546, 8-6-68, Cl. 62—10.
Sherrington, John A.: *See—*
Ho, Hin H., Sherrington, and Vousden. 3,396,333.
Sherwin-Williams Co., The: *See—*
Penoyer, Charles E. 3,396,181.
Shibata, Kiyoshi, to Ishikawajima-Harima Jukogyo Kabushiki Kaisha. Automatic regulator of liquid clearing incorporated in the pipe line. 3,395,721, 8-6-68, Cl. 137—87.
Shimabukuro, George T., to Xerox Corp. Stepping motor drive circuit including damping means. 3,396,322, 8-6-68, Cl. 318—138.
Shinko Electric Co., Ltd.: *See—*
Makino, Shinobu. 3,396,294.
Shuetze, Clarke E., to AMP, Inc. Encapsulation technique. 3,396,117, 8-6-68, Cl. 252—182.
Shuler, William R.: *See—*
O'Berry, Richard V., and Shuler. 3,395,789.
Shumard, Kermit J., and R. D. McDonald, to General Electric Co. Seal for telescoped members. 3,395,924, 8-6-68, Cl. 277—135.
Siddley, Herbert: *See—*
Powanda, Stephen. 3,395,495.
Sidles, James: *See—*
Bayliff, Robert, Le Blanc, and Sidles. 3,395,879.
Siemens Aktiengesellschaft: *See—*
Beyerlein, Fritz-Werner. 3,395,447.
Merkel, Hans. 3,395,985.
Siggel, Erhard: *See—*
Roedel, Hilmar, and Siggel. 3,396,149.
Simonds, George D., Jr., to Badger Meter Mfg. Co. Compound meter and valve. 3,395,578, 8-6-68, Cl. 73—197.
Simpson Timber Co.: *See—*
Clausen, Victor H., and Zweig. 3,395,915.
Sims, Jay F.: *See—*
Bell, Richard J., Campbell, Gibson, and Sims. 3,396,037.
Sincerbox, Glenn T.: *See—*
Max, Erhard, and Sincerbox. 3,396,266.
Sinclair, Neil A. ,to General Dynamics Corp. Apparatus for ultrasonic detection and display material detects of location of. 3,395,572, 8-6-68, Cl. 73—67.8.
Sinclair Research, Inc.: *See—*
Hearn, Daniel P. 3,396,334.
Sinfelt, John H.: *See—*
Taylor, William F., and Sinfelt. 3,396,124.
Singer Co., The: *See—*
Creter, Frederick G. 3,395,661.
Fritts, Russell A. 3,395,662.
Singer-Cobble Ltd.: *See—*
Hasler, William S., Evans, Dawson, and Parker. 3,395,432.
Singham, John R.: *See—*
Spalding, Dudley B., and Singham. 3,395,902.
Sipin, Anatole J. Pressure measuring apparatus. 3,395,581, 8-6-68, Cl. 73—398.
Sittner, Wilfried: *See—*
Lang, Franz, and Sittner. 3,395,517.
Sivertsen, Richard: *See—*
Karlsson, Nils, Lundqvist, Nilsson, and Sivertsen. 3,396,324.
Sivilotti, Olivo G., and A. Briand, to Aluminum Co. of Canada. Electrolytic method an dapparatus for production of magnesium. 3,396,094, 8-6-68, Cl. 204—70.
Skarsten, Norman E. Portable barbecue. 3,395,691, 8-6-68, Cl. 126—25.
Sklerski, Edwin J., to Parker-Kalon Corp. Rotary threaded fasteners. 3,395,603, 8-6-68, Cl. 85—47.
Skil Corp.: *See—*
Pfetzing, Henry V. 3,395,688.
Slagteriernes Forskningsinstitut: *See—*
Knudsen, Erik S. 3,396,280.
Smith, Betty Y. Doll figures having an internal wire skeleton. 3,395,484, 8-6-68, Cl. 46—151.
Smith, Cannon P. Treatment room construction for dental offices. 3,395,500, 8-6-68, Cl. 52—29.
Smith, Carleton C.: *See—*
Chapman, William P., Smith, and Donovan. 3,396,879.
Smith, Donald L.: *See—*
Medley, Jackson C., Smith, and Franz. 3,395,946.
Smith, Horace L., Jr., to Hupp Corp. Coffee roasting apparatus. 3,395,634, 8-6-68, Cl. 99—236.
Smith, Jacque A., to C. C. Cottrell. Apparatus for setting hair. 3,395,790, 8-6-68, Cl. 206—65.
Smith, James L.: *See—*
Harrington, Robert C., Jr., and Smith. 3,396,144.
Smith, Peter A. C.: *See—*
Vander Linden, Ronald C., Salva, and Smith. 3,396,173.
Smith, Richard E., to GAF Corp. Thermal developing apparatus. 3,395,631, 8-6-68, Cl. 95—77.5.
Smith, Richard H. Deep sea refuse disposal. 3,395,663, 8-6-68, Cl. 114—28.
Smith, Robert K., and S. J. Barber, to E. F. Houghton & Co. Lubricants comprising certain diesters of maleic, fumaric or itaconic acids and method of lubricating. 3,396,111, 8-6-68, Cl. 252—56.
Smith, Robert P. Double-lens goggles. 3,395,406, 8-6-68, Cl. 2—14.
Smith, S., & Sons (England) Ltd.: *See—*
Ho, Hin H., Sherrington, and Vousden. 3,396,333.
Smith, Thomas D.: *See—*
Cox, Leroy E., and Smith. 3,396,051.
Smith, William D., to Solar, a Division of International Harvester Co. Vibration damping composite. 3,395,775, 8-6-68, Cl. 181—33.
Smyth Mfg. Co., The: *See—*
Thorp, James H. 3,395,597.
Snapp, Merton D.: *See—*
Dodgen, Joe W., Johnson, and Snapp. 3,395,868.
Snedeker, Robert H., to Union Carbide Corp. Asbestos-modified thermoplastic polyhydroxyethers. 3,396,139, 8-6-68, Cl. 260—37.
Societe anonyme: Simca Automobiles: *See—*
Piret, Jean. 3,395,931.
Societe d'Etude de la Propulsion Par Reaction (Societe Anonyme): *See—*
Vilet, Andre. 3,395,645.
Societe d'Etude de la Valorisation Des Gaz Naturels Du Sahara S.E.G.A.N.S.: *See—*
Lamy, Jacques E. 3,395,505.
Societe Francaise de Mecanique Liniese: *See—*
Mille, Louis. 3,395,846.
Societe Generale de Constructions Electriques et Mecaniques (Alsthom): *See—*
Hochart, Bernard, and Burnier. 3,396,355.
Societe Industrielle de Brevets et d'Etudes S.I.B.E.: *See—*
Mennesson, Andre L. 3,395,730.
Societe Industrielle de Mecanique Appliquee S.I.G.M.A.: *See—*
Gelin, Robert J. J. 3,395,646.
Societe le Carbone-Lorraine: *See—*
Gremion, Robert. 3,396,054.
Soffer, Bernard H.: *See—*
Maiman, Theodore H., Hoskins, Soffer, Pastor, and Pearson. 3,396,119.
Sogn, Leland T. Lapping machine. 3,395,494, 8-6-68, Cl. 51—161.
Solar, a Division of International Harvester Co.: *See—*
Smith, William D. 3,395,775.
Solitron Devices, Inc.: *See—*
Sussman, Sanford. 3,396,361.
Solvay & Cie: *See—*
Delbouille, Andre, and Toussaint. 3,396,155.
Van Diest, Jacques, and Menier. 3,396,095.
Somerville, William M., to Clarke, Chapman & Co. Ltd. Alternating current generators. 3,396,291, 8-6-68, Cl. 310—263.

Sorenson Lighted Controls, Inc.: *See—*
Sorenson, Wesley T. 3,396,269.
Sorenson, Wesley T., to Sorenson Lighted Controls, Inc. Snap-in lens. 3,396,269, 8-6-68, Cl. 240—152.
Sousek, Eugene A., and W. E. Witt, to Fox River Tractor Co. Material spreaders having remote controls. 3,395,866, 8-6-68, Cl. 239—670.
Southwire Co.: *See—*
Cofer, Daniel B., and Ward. 3,395,560.
Sowder, Tony R. Pivoting ski chair seat for trams. 3,395,938, 8-6-68, Cl. 297—333.
Spalding, Dudley B., and J. R. Singham, to W. S. Lovely. Cooling towers. 3,395,902, 8-6-68, Cl. 261—112.
Sparer, Seno: *See—*
Evans, Robert L., and Sparer. 3,395,610.
Speed, Sidney E., to Olin Mathieson Chemical Corp. Process for aluminizing metal. 3,396,048, 8-6-68, Cl. 117—51.
Spence, Gary W.: *See—*
Garfunkel, James H., and Spence. 3,396,386.
Spencer, Lloyd. Spherical plural valve actuator mixing valve. 3,395,733, 8-6-68, Cl. 137—636.2.
Spencer, Lloyd. Dual handle mixing valve. 3,395,734, 8-6-68, Cl. 137—637.
Spencer, John R., and W. D. Greathouse, to Continental Oil Co. One-piece resilient compressor valve. 3,395,858, 8-6-68, Cl. 230—231.
Sperry, Elmer A., III, to Beckman Instruments, Inc. Method of and apparatus for measuring the electrical conductivity of a solution. 3,396,331, 8-6-68, Cl. 324—30.
Sperry Rand Corp.: *See—*
Behringer, Norman C., and Treffelsen. 3,396,383.
Black, Stanley H., and Jacobson. 3,396,340.
Grey, Gordon E. 3,395,814.
Riggs, Robert F., and Teague. 3,396,390.
Wang, Chao C. 3,396,348.
Spiegel, J., Mfg. Corp.: *See—*
Bellock, John. 3,395,811.
Sprague, Theodore S., to The Babcock & Wilcox Co. Vapor generator. 3,395,676, 8-6-68, Cl. 122—32.
Squibb, E. R., & Sons, Inc.: *See—*
Bernstein, Jack, and Engel. 3,396,159.
Stahmer, Bernhardt. Compressible container. 3,395,836, 8-6-68, Cl. 222—215.
Staley, A. E., Mfg. Co.: *See—*
Kessinger, Gene L. 3,396,035.
Standard Oil Co. (Indiana): *See—*
Cropper, Wendell P. 3,396,336.
Hittinger, Earl J. 3,396,215.
Vienna, Paul C., Plemich, and Gaynor. 3,396,114.
Stanley, Newman E.: *See—*
Sherlock, Harrison B., and Stanley. 3,395,546.
Sta-Rite Products, Inc.: *See—*
Grebel, Grant, and Kinnavy. 3,395,644.
Star Paper Tube, Inc.: *See—*
O'Berry, Richard V., and Shuler. 3,395,789.
Stark, Frank L., Jr., to American Cyanamid Co. Insecticidal composition consisting of technical grade malathion as a carrier having dissolved therein certain other malathion-soluble technical grade synthetic organic insecticides. 3,396,223, 8-6-68, Cl. 424—213.
Starmer, Roy, to Applied Research and Engineering Ltd. Recompression evaporators. 3,396,086, 8-6-68, Cl. 202—183.
Stauffer Chemical Co.: *See—*
Pallos, Ferenc M., and Pavlath. 3,396,202.
Wiseman, James V., and Hellmers. 3,395,906.
Steel Rolling Corp. (Africa) (Proprietary): *See—*
Seeff, Morris. 3,395,438.
Steelcraft Corp.: *See—*
Ford, Lewis M. and Franklin. 3,395,656.
Steele, Martin C.: *See—*
Glicksman, Maurice, and Steele. 3,396,283.
Stelzer, William, to Kelsey-Hayes Co. Proportioning valve. 3,395,537, 8-6-68, Cl. 60—54.5.
Sterling Drug Inc.: *See—*
Bell, Malcolm R. 3,396,162.
Stillman, Milton. Mouth to mouth resuscitation device. 3,395,700, 8-6-68, Cl. 128—145.5.
Stites, Randall S.: *See—*
Buddecke, Charles L., Meyer, and Stites. 3,396,305.
Stokes, Jordan, III. Electrolytic capacitor. 3,396,315, 8-6-68, Cl. 317—230.
Stoller, Frederick L., to Phillips Petroleum Co. Fractional crystallization system. 3,395,547, 8-6-68, Cl. 62—58.
Stoten, Terence A., to George Kent Ltd. Apparatus to ensure accurate working of meters at low flow rates. 3,395,579, 8-6-68, Cl. 73—199.
Stout, Ellarson R., to Curtiss-Wright Corp. Torque limiting drive coupling. 3,395,553, 8-6-68, Cl. 64—15.
Stoutamire, Donald W., to Shell Oil Co. Preparation of (monocyclic aryl)methyl, alpha, alpha-dithiol-bis (O,O-dialkylphosphorodithioate. 3,396,213, 8-6-68, Cl. 260—978.
Strange, John, to Tinnerman Products, Inc. Self-threading nut. 3,395,602, 8-6-68, Cl. 85—32.
Stratton, Robert A., and F. Wach. Gastro-intestinal tube with inflatable weight releasing means. 3,395,710, 8-6-68, Cl. 128—350.
Stricker, Charles D.: *See—*
Moyer, Robert C., and Stricker. 3,396,092.
Stroshane, Richard C.: *See—*
Isheim, Maynard C., and Stroshane. 3,395,905.
Strout, Frederick D., to General Electric Co. Display data processor. 3,396,377, 8-6-68, Cl. 340—324.
Structural Fibers, Inc.: *See—*
Wiltshire, Arthur J. and Pavlovich. 3,395,735.
Strycker, Stanley J., to The Dow Chemical Co. Method and composition for plant growth alteration. 3,396,006, 8-6-68, Cl. 71—92.
Strycker, Stanley J., to The Dow Chemical Co. Composition and method for stimulating plant growth. 3,396,007, 8-6-68, Cl. 71—77.
Studebaker Corp.: *See—*
Kruse, Orlen A. 3,395,689.
Sullivan, Donald L. Art of rod-end bearing manufacture. 3,395,436, 8-6-68, Cl. 29—149.5.
Sulzer Bros., Ltd.: *See—*
Brandstetter, Georg. 3,395,677.
Brunner, Alfred. 3,396,273.
Bysath, Kurt. 3,396,045.
Sumimoto, Morio: *See—*
Sumimoto, Seiji and M. 3,395,803.
Sumimoto Scientific Institute Co.: *See—*
Sumimoto, Seiji and M. 3,395,803.
Sumimoto, Seiji and M., to Sumimoto Scientific Institute Co. Apparatus for filtration of liquids in container. 3,395,803, 8-6-68, Cl. 210—122.
Sun Oil Co.: *See—*
Bushick, Ronald D. 3,396,203.
Sundberg, Yngve, to Allmanna Svenska Elektriska Aktiebolaget. Device for inductive heating and/or stirring. 3,396,229, 8-6-68, Cl. 13—27.
Sussman, Sanford, to Solitron Devices, Inc. Combined mounting support, heat sink, and electrical terminal connection assembly. 3,396,361, 8-6-68, Cl. 339—112.
Sutcliffe, Eugene G.: *See—*
Sutcliffe, Hazel L. and E. G. 3,395,740.
Sutcliffe, Hazel L. and E. C. Liquid dispensing nozzle spout structure. 3,395,740, 8-6-68, Cl. 141—392.
Sutterfield, Gerald T., and E. J. Amberg, Jr., to Industrial Nucleonics Corp. Measuring system. 3,396,219, 8-6-68, Cl. 264—40.
Suzuki, Saburo, to Nihon Yushutsu Denkyu Kyodo Kumai and ½ to Super Denki Kabushiki Kaisha. Holding means for miniature bulbs. 3,396,363, 8-6-68, Cl. 339—145.
Svyadosch, Jury N., J. P. Lazarev, and M. A. Melnichenko, to Ust-Kamenogorsky Svintsovo-Tsinkovy Kombinat Imeni V.I. Lenina. Reactor for hydrometallurgical processes. 3,395,907, 8-6-68, Cl. 266—12.
Swan, George B. Method of webbing a newspaper printing press. 3,395,639, 8-6-68, Cl. 101—426.
Swanson, Kenneth P., to Progressive Engineering, Inc. Magnetic top roll mounting system. 3,395,427, 8-6-68, Cl. 19—272.
Swanson, William C.: *See—*
Moyer, Donald W., Swanson, and Lam. 3,395,771.
Sweeny, Allen N., to De Vlieg Machine Co. Spade drill grinding fixture. 3,395,496, 8-6-68, Cl. 51—220.
Sweetheart Plastics, Inc.: *See—*
White, James C. 3,396,062.
Swift, Harvey C., to Kelsey-Hayes Co. Caliper and support for a disk brake. 3,395,780, 8-6-68, Cl. 188—73.
Swiggett, Robert L.: *See—*
Burr, Robert P., and Swiggett. 3,396,335.
Sylvania Electric Products Inc.: *See—*
Ball, David M., and Disman. 3,396,395.
Burdick, Glen A. 3,396,297.
Kautz, George R., and Lawson. 3,395,628.
Kuryla, Alan T. 3,396,298.
Szabo, Ted T., and F. P. Klosek, to Union Carbide Corp. Method for devolatilizing liquid polymer compositions. 3,395,746, 8-6-68, Cl. 159—47.
TRW, Inc.: *See—*
Herbenar, Edward J. 3,395,441.
Herbenar, Edward J. 3,395,442.
Takagi, Kenzo: *See—*
Matsuda, Shogo, and Takagi. 3,395,969.
Takamatu, Osamu: *See—*
Serizawa, Ryunosuke, Tanaka, and Takamatu. 3,396,252.
Takeda Chemical Industries, Ltd.: *See—*
Matsumoto, Katumi, Iwai, and Fujioka. 3,396,128.
Sakai, Michihiko, Konishi, and Kato. 3,396,212.
Talley, William A., Jr., to Mobil Oil Corp. Well tool pumpable through a flowline. 3,395,759, 8-6-68, Cl. 166—155.
Tamblyn, John W.: *See—*
Newland, Gordon C., and Tamblyn. 3,396,143.
Tamplen, Jack W., to Otis Engineering Corp. One way seal. 3,395,728, 8-6-68, Cl. 137—525.
Tanaka, Kiichi: *See—*
Serizawa, Ryunosuke, Tanaka, and Takamatu. 3,396,252.
Tappolet, Karl H., and A. Gerspacher, to Firma Tagers G.m.b.H. Separating and transporting piled metal sheets. 3,395,912, 8-6-68, Cl. 271—16.
Tarran, Phil K. Automatic dispensing means. 3,395,835, 8-6-68, Cl. 222—99.
Tatsuno, Hiyoshi. Gasoline filling station. 3,395,723, 8-6-68, Cl. 137—355.22.
Taub, David: *See—*
Wendler, Norman L., and Taub. 3,396,192.
Taylor, Frederick T., to E. V. Prentise Co. Temperature-sensitive speed-adjustable conveyor-type dryer. 3,395,459, 8-6-68, Cl. 34—52.
Taylor Instrument Companies: *See—*
Barthel, Roy W., and Jaquith. 3,396,374.
Taylor, James W., to United States of America, Navy. Sea water triggered electrical energy source. 3,395,640, 8-6-68, Cl. 102—16.
Taylor, John C., to Honeywell, Inc. Servo monitoring control apparatus. 3,395,615, 8-6-68, Cl. 91—363.
Taylor, Lloyd D., to Polaroid Coorp. Photographic capsular products. 3,396,026, 8-6-68, Cl. 96—94.
Taylor, William F., and J. H. Sinfelt, to Esso Research and Engineering Co. Catalyst for low temperature conversion of hydrocarbons to hydrogen and methane. 3,396,124, 8-6-68, Cl. 252—465.
Teague, Demster L.: *See—*
Riggs, Robert F., and Teague. 3,396,390.

Technicolor, Inc.: *See—*
Monteleoni, Giulio, and Ventimiglia. 3,396,021.
Teleflex, Inc.: *See—*
Shaeffer, Robert J. 3,395,591.
Telefunken Patentverwertungs-G.m.b.H.: *See—*
Krank, Wolfgang, and Schickle. 3,396,350.
Mallebrein, Rainer. 3,396,306.
Telex Corporation, The: *See—*
Flygstad, Dean W. 3,396,245.
Temple, Fred, to Westinghouse Air Brake Co. Check valve. 3,395,729, 8-6-68, Cl. 137—543.19.
Teotino, Uberto, and D. Della Bella, to Whitefin Holdings S.A. Naphthoxabinones. 3,396,164, 8-6-68, Cl. 260—244.
Ter Horst, William P.: *See—*
Dickson, Charles A., and Ter Horst. 3,396,150.
Teschner, Allen R. Swimming pool. 3,395,407, 8-6-68, Cl. 4—172.
Teshi, Haruo, and F. Sakai, to Elmo Company Ltd. Small-sized cinematographic camera device. 3,395,965, 8-6-68, Cl. 352—221.
Texas Instruments Inc.: *See—*
Cunningham, James A., and Hanna. 3,396,312.
Vednelin, George D. 3,396,317.
Theile, Kenneth W.: *See—*
McCarty, Charles B., and Theile. 3,396,204.
Thermal Syndicate Ltd., The: *See—*
Winterburn, John A. 3,396,043.
Thomas & Betts Co., The: *See—*
Crimmins, David J. 3,396,230.
Thomas, William R.: *See—*
Gambill, Ulysses T., and Thomas. 3,396,070.
Thompson, Earl A. Casting method. 3,395,747, 8-6-68, Cl. 164—95.
Thompson, Richard L., and F. B. Dwyer, to The Colonial Sugar Refining Co. Ltd. Method of ore sorting based on differential infrared emission. 3,395,793, 8-6-68, Cl. 209—3.
Thor Metal Products Co., Inc.: *See—*
Falso, Adolph. 3,395,753.
Thornton, David A., and M. E. B. Jones, to Ciba Ltd. Metal chelate derivatives. 3,396,177, 8-6-68, Cl. 260—348.
Thorp, James H., to The Smyth Mfg. Co. Back strip trimming machine. 3,395,597, 8-6-68, Cl. 33—417.
Tiegel Mfg. Co.: *See—*
Tiegel, Ralph G. 3,395,748.
Tiegel, Ralph G., to Tiegel Mfg. Co. Method and apparatus for fabricating battery connector straps. 3,395,748, 8-6-68, Cl. 164—103.
Tile Council of America, Inc.: *See—*
Weller, Ernest E. 3,396,138.
Weller, Ernest E. 3,396,140.
Weller, Ernest E. 3,396,141.
Timely Products Corp.: *See—*
Murphy, Dennis J., and Balz. 3,396,264.
Tindal, James A.: *See—*
Brandt, Harold A. 3,395,950.
Tinnerman Products, Inc.: *See—*
Strange, John. 3,395,602.
Williams, Alan. 3,395,604.
Titow, Benuamin: *See—*
Best, Howard S., and Titow. 3,395,844.
Tojo, Tamotsu, to Matsushita Electronics Corp. Photoconductive targets. 3,396,053, 8-6-68, Cl. 117—217.
Tokuda, Yoshio, to Kinkohsha Insatsu Kabushiki Kaisha (Rep: Kinsen Tokuda). Apparatus for detecting passage of moving objects. 3,396,279, 8-6-68, Cl. 250—221.
Tompos, Donald J.: *See—*
Martin, Philip T., and Tompos. 3,396,275.
Toromanoff, Edmond: *See—*
Martel, Jacques, Toromanoff, and Huynh. 3,396,188.
Torrington Co., The: *See—*
Fisher, Walter. 3,395,956.
Touey, George P., and R. C. Mumpower II, to Eastman Kodak Co. Filter tow of crimped continuous polyolefin filaments. 3,396,073, 8-6-68, Cl. 161—173.
Toussaint, Henri: *See—*
Delhouille, Andre, and Toussaint. 3,396,155.
Town, Bernard W.: *See—*
Laufer, Louis, and Town. 3,396,156.
Towner, Walter T.: *See—*
Richman, Peter L., Towner, and Nordahl. 3,396,347.
Toyo Kogyo Co. Ltd.: *See—*
Maeda, Hisayoshi. 3,395,904.
Toyo Rayon Kabushiki Kaisha: *See—*
Yumoto, Hirosuke, Harada, and Itoga. 3,396,216.
Toyoda Automatic Loom Works, Ltd.: *See—*
Nishikawa, Rihei. 3,395,736.
Toyotsushinki Kabushiki Kaisha: *See—*
Nakazawa, Yuzo. 3,396,327.
Treffelsen, Donal R.: *See—*
Behringer, Norman C., and Treffelsen. 3,396,383.
Treloar, Ronald C., to General Motors Corp. Air operated horn receiving air supply from exhaust emission control line. 3,396,385, 8-6-68, Cl. 340—404.
Trentini, Bernard, to Institut de Recherches de la Siderurgie Francaise. Process and apparatus for the continuous refining of ferrous metal and particularly pig iron. 3,396,011, 8-6-68, Cl. 75—60.
Trocki, Thomas, and E. E. Olich, to General Electric Co. Velocity limiter. 3,395,781, 8-6-68, Cl. 188—96.
Trowbridge, Robert E.: *See—*
Worden, Donald G., and F. C., Diedrichs, and Trowbridge. 3,395,463.
Troy, Elbert C., to National Engineering Co. Automatically controlled mixer discharge system. 3,395,834, 8-6-68, Cl. 222—63.
Turner, Ernest & Co. (Salford) Ltd.: *See—*
Randle, Jack. 3,395,430.
Turney, Wellman D.: *See—*
Woods, Verle W., and Turney. 3,396,008.
Tweedle, William: *See—*
Whittaker, Jack D., Loveday, Barbour, Tweedle, and Dryden. 3,395,458.
Tyma, Louis S.: *See—*
Kirkus, Ludwig, and Tyma. 3,395,638.
U.S. Plywood-Champion Papers Inc.: *See—*
Hoffmann, Reuben F. 3,396,064.
U.S. Vitamin & Pharmaceutical Corp.: *See—*
Freedman, Louis, and Merritt. 3,396,193.
Uhlig, Fritz, to Azoplate Corp. Planographic printing plates. 3,396,019, 8-6-68, Cl. 96—33.
Ullman, John E., to Huntingdon Inc. Adhesive heating apparatus. 3,395,694, 8-6-68, Cl. 126—343.5.
Ulrich, Friedrich, and B. Villinger, to International Standard Electric Corp. Selection circuit having magnetic core matrix means. 3,396,242, 8-6-68, Cl. 179—18.
Ungerer, Fritz, deceased (by R. Bauer, administrator), to I. Ungerer. Straightening machine. 3,395,559, 8-6-68, Cl. 72—17.
Ungerer, Irma: *See—*
Ungerer, Fritz. 3,395,559.
Ungnade, Herbert E.: *See—*
Benziger, Theodore M., Kissinger, and Ungnade. 3,396,187.
Union Carbide Corp.: *See—*
Bonotto, Sergio, and Wagner. 3,396,211.
Hamel, William J. 3,395,724.
Holmes, Ronald L. W. 3,395,910.
Kun, Leslie C. 3,395,949.
Maiman, Theodore H., Hoskins, Soffer, Pastor, and Pearson. 3,396,119.
Patterson, Richard L. 3,396,058.
Snedeker, Robert H. 3,396,139.
Szabo, Ted T., and Klosek. 3,395,746.
United Shoe Machinery Corp.: *See—*
Kvavle, Robert C. 3,395,843.
United States of America
Agriculture: *See—*
Davis, Edwin N., Rhodes, and Wallen. 3,396,082.
Wade, Ricardo H., Welch, and Bennett. 3,395,971.
Welch, Clark M. 3,396,198.
Yeadon, David A., Rayner, Verburg, Hooper, Dollear, and Dupuy. 3,396,129.
Air Force: *See—*
Charlton, Thomas E., and Long. 3,396,396.
Irvine, Laurence A. 3,396,084.
Kott, Michael A. 3,396,397.
Marshall, Louise A. 3,395,882.
Army: *See—*
Fishbein, William, and Rittenbach. 3,396,392.
Harvey, Earle M. 3,395,478.
Piccone, Marshall. 3,396,060.
Atomic Energy Commission: *See—*
Benziger, Theodore M., Kissinger, and Ungnade. 3,396,187.
Clabaugh, William J. 3,395,647.
Easton, Dewey S. 3,396,259.
George, Raymond S., and Rohwer. 3,396,200.
Grimes, Warren R., and Shaffer. 3,395,991.
Hamrin, Charles E., Jr. 3,396,080.
Low, Donald D. 3,396,375.
Olson, Donald M. 3,396,272.
Wolfsberg, Kurt, and Daniels. 3,395,992.
Interior: *See—*
Nakagawa, Harry M., and Lakin. 3,395,987.
National Aeronautics and Space Administration: *See—*
Gordon, William A. 3,396,303.
Juvinall, Gordon L. 3,396,184.
Navy: *See—*
Bartlett, Roscoe G., and Brunsman. 3,395,701.
Betzold, Edward R. 3,395,670.
Bowyer, Charles S. 3,396,300.
Brooks, John D. 3,395,720.
Crump, Lloyd R. 3,396,389.
Dietrich, Arnold K. 3,396,267.
Fetter, Neil R., and Bartocha. 3,396,170.
Ginter, Robert J. 3,396,120.
Keenan, Edward R. 3,395,669.
Logan, Frank G. 3,396,310.
Mendelson, Emanuel S. 3,395,697.
Pellecchia, Louis. 3,396,321.
Rastrelli, Leonard U., and Anderson. 3,395,564.
Rosenberg, Edgar N., and Moran. 3,395,665.
Schecter, Roger M., and Russ. 3,395,516.
Sharts, Clay M. 3,396,197.
Taylor, James W. 3,395,640.
United States Borax & Chemical Corp.: *See—*
Colling, John F. 3,395,984.
United States Envelope Co.: *See—*
Allison, Robert D. 3,395,851.
United States Steel Corp.: *See—*
Bruce, Theodore B., and Nelson. 3,395,813.
Burch, Charles J. 3,395,995.
Didycz, William J. 3,395,982.
Granville, Edward. 3,395,766.
Keene, Robert J. 3,395,750.
Kolobielski, Marjan. 3,396,148.
Krane Bronnie F. 3,395,518.
Lucht, Wilbert A. 3,395,528.
Moyer, Robert C., and Stricker. 3,396,092.
Universal Oil Products Co.: *See—*
Broughton, Donald B. 3,396,101.
Cyba, Henryk A. 3,396,186.
Finney, James A., Jr., and Jablin. 3,395,512.

Universal Oil Products Co.: *See*—Continued
Hardison, Leslie C. 3,395,972.
Lusskin, Robert M., Backer, and Larson. 3,396,147.
Urban, Peter. 3,396,123.
Van Tassell, Harry M. 3,396,090.
University of California, The Regents of the: *See*—
Kopa, Richard D. 3,395,899.
Upjohn Co., The: *See*—
Hester, Jackson B., Jr. 3,396,160.
Lednicer, Daniel. 3,396,169.
Visser, Melvin J. 3,396,195.
Urban, Peter, to Universal Oil Products Co. Method of preparing a catalyst composite. 3,396,123, 8-6-68, Cl. 252—428.
Ust-Kamenogorsky Svintsovo-Tsinkovy Kombinat imeni V.I. Lenina: *See*—
Svyadosch, Jury N., Lazarev, and Melnichenko. 3,395,907.
V-M Corp.: *See*—
Freier, Walter J. 3,395,919.
Rankin, John A. 3,396,247.
Valspar Corp., The: *See*—
Despota, Angelo F., Pipkins, and Henkel. 3,396,218.
Valve Corp. of America: *See*—
Beres, Steven W., and O'Donnell. 3,395,838.
Van Bergen, Adrianus A., to Frits Bode Mechanische Bouwmaterialen N. V. Vertically swinging door. 3,395,488, 8-6-68, Cl. 49—204.
Vander Linden, Ronald C., J. M. Salva, and P. A. C. Smith, to Esso Research and Engineering Co. Synthesis of episulfides. 3,396,173, 8-6-68, Cl. 260—327.
Van Diest, Jacques, and J. Menier, to Solvay & Cie. Method and apparatus for the continuous regulation of the distance between the electrodes of electrolytic cells with liquid mercury cathodes. 3,396,095, 8-6-68, Cl. 204—225.
Van Heyningen, Earle M., to Lilly, Eli and Co. Controlling phytopathogenic fungi on plants with 3-pyridye methane derivatives. 3,396,224, 8-6-68, Cl. 424—263.
Van Tassell, Harry M., to Universal Oil Products Co. Recovery of sulfolane by distillation with prevaporization. 3,396,090, 8-6-68, Cl. 203—73.
Varian Associates: *See*—
Miram, George V. 3,396,339.
Vazquez, Charles, to International Standard Electric Corp. Miniature contact set using pre-stressed coiled spring. 3,396,257, 8-6-68, Cl. 200—166.
Vednelin, George D., to Texas Instruments Inc. Surface-oriented high frequency. 3,396,317, 8-6-68, Cl. 317—234.
Vehrs, Charles L.: *See*—
Anderson, James O., Rosenstock, and Vehrs. 3,396,391.
Velvac, Inc.: *See*—
Murgas, William J. 3,395,883.
Ventimiglia, Giovanni: *See*—
Monteleoni, Giulio, and Ventimiglia. 3,396,021.
Verburg, Gerald B.: *See*—
Yeadon, David A., Rayner, Verburg, Hooper, Dollear, and Dupuy. 3,396,129.
Vercillo, Peter A., to Continental Can Co., Inc. Insert for easy opening can end. 3,395,839, 8-6-68, Cl. 222—479.
Verduin, Lee C.: *See*—
Kuiper, James R., and Verduin. 3,395,576.
Vereinigte Glanzstoff-Fabriken A.G.: *See*—
Roedel, Hilmar, and Siggel. 3,396,149.
Vertnik, Leonard R.: *See*—
Floyd, Don E., Ess, and Vertnik. 3,396,180.
Vesuvius Crucible Co.: *See*—
Gardner, Weldon J. 3,395,840.
Vesuvius Crucible Co.: *See*—
Minteer, Henry D., Jr. 3,395,831.
Vetrocoke Societa per Azioni: *See*—
Giammarco, Giuseppe. 3,395,978.
Vette, Alfred W. Pencil point sharpening device. 3,395,499, 8-6-68, Cl. 51—371.
Vienna, Paul C., J. J. Piemich, and J. W. Gaynor, to Standard Oil Co. Combination hydraulic and transmission fluids. 3,396,114, 8-6-68, Cl. 252—78.
Vilet, Andre, to Societe d'Etude de la Propulsion Par Reaction (Societe Anonyme). Shaft seal assembly. 3,395,645, 8-6-68, Cl. 103—111.
Villiger, Remy, to Lador S.A. Music box movement. 3,395,599, 8-6-68, Cl. 84—95.
Villinger, Bernhard: *See*—
Ulrich, Friedrich, and Villinger. 3,396,242.
Vinogradov, Alexandr S., J. M. Kapustin, I. N. Maxjutenko, V. N. Kiselnikov, I. S. Borisov, and I. M. Mazalov. Card. 3,395,425, 8-6-68, Cl. 19—105.
Visner, Sidney, to Combustion Engineering, Inc. Fuel arrangement for fast breeder reactor. 3,396,078, 8-6-68, Cl. 176—17.
Visser, Melvin J., to The Upjohn Co. Process for making 2,6-dichloro-4-nitroaniline. 3,396,195, 8-6-68, Cl. 260—578.
Vitalis, Emil A., and R. J. Chamberlain, to American Cyanamid Co. Sulfo-N-alkylpropionamide salts as emulsifying agents in polymerization of unsaturated compounds. 3,396,153, 8-6-68, Cl. 260—80.7.
Vitins, Janis: *See*—
Schubert, Helmuth, and Vitins. 3,396,253.
Vitreous Steel Products Co.: *See*—
Hedden, Walter A., Bowers, and King. 3,396,055.
Vogt, Wilhelm: *See*—
Sennewald, Kurt, Erpenbach, Vogt, and Joest. 3,396,089.
Voice, Stanley M., to H. Daroff & Sons, Inc. Garment label and method of use. 3,395,470, 8-6-68, Cl. 40—2.
Von Baeckmann, Adolf: *See*—
Glemser, Oskar, and von Baeckmann. 3,395,976.
Von Fange, Eugene K., to General Electric Co. I.F. filter for television tuner. 3,396,341, 8-6-68, Cl. 325—477.
Von Unwerth, Werner. Process and device for the treatment of gases. 3,395,513, 8-6-68, Cl. 55—86.
Vousden, James B.: *See*—
Ho, Hin H., Sherrington, and Vousden. 3,396,333.
W. Ferd. Klingelnberg Sohne: *See*—
Burger, Hermann, 3,395,492.
Burger, Hermann, and Zeise. 3,395,491.
Wach, Fritz: *See*—
Stratton, Robert A., and Wach. 3,395,710.
Wade, Ricardo H., C. M. Welch, and H. P. Bennett, to United States of America, Agriculture. Production of fibrous cellulose ethers using iodide salts as catalysts. 3,395,971, 8-6-68, Cl. 8—120.
Wagner Electric Corp.: *See*—
Bueler, Richard C. 3,395,944.
Wagner, Eric R.: *See*—
Bonotto, Sergio, and Wagner. 3,396,211.
Wagner, Richard, to Grundig E.M.V. Elektro-Mechanische Versuchsanstalt Inh. Max Grundig. Measurement of the distance between two points based on measuring the travelling time of electromagnetic waves. 3,396,393, 8-6-68, Cl. 343—14.
Wain-Roy Corp.: *See*—
Arnold, Carroll H. 3,395,812.
Waldecker, Donald E., to International Business Machines Corp. Controller for data processing system. 3,396,371, 8-6-68, Cl. 340—172.5.
Waldo, Russell W., to Ideal Security Hardware Corp. Door chain lock. 3,395,556, 8-6-68, Cl. 70—93.
Walker, David G.: *See*—
Winegartner, Edgar C., and Walker. 3,395,973.
Walker, George W.: *See*—
Bleigh, Harold R., and Walker. 3,395,588.
Walker Mfg. Co.: *See*—
Offer, Robert J. 3,395,804.
Offer, Robert J. 3,395,808.
Walker, William T. B. Fuel evaporator and economizer for internal combustion engines. 3,395,681, 8-6-68, Cl. 123—119.
Wallen, Lowell L.: *See*—
Davis, Edwin N., Rhodes, and Wallen. 3,396,082.
Wallner, Siegfried, Jr. Knee stretch stocking. 3,395,554, 8-6-68, Cl. 66—172.
Waltonen, Edward J., to Wes Industries, Inc. Force-applying fabricating device. 3,396,260, 8-6-68, Cl. 219—89.
Wang, Chao C., to Sperry Rand Corp. Broadband controlled mutual inductance slow wave propagating structure. 3,396,348, 8-6-68, Cl. 333—31.
Ward, George C.: *See*—
Cofer, Daniel B., and Ward. 3,395,560.
Warner & Swasey Co., The: *See*—
Cusson, David E. 3,395,596.
Warren, James S.: *See*—
Mobarry, John W., and Warren. 3,395,968.
Warren, Robert M., Jr., and M. H. Kornhauser, to Buensod-Stacey Corp. Air mixing device. 3,395,633, 8-6-68, Cl. 98—38.
Warwick Electronics Inc.: *See*—
Benzuly, Harold J. 3,396,237.
Waterdrink, Inc.: *See*—
Huntington, Morgan G. 3,396,103.
Watts, Gordon V.: *See*—
Francis, Frank P. G., and Watts. 3,395,772.
Weaver, Cedric D.: *See*—
Hodges, John E., Joyner, and Weaver. 3,395,816.
Webb, James E., Administrator of the National Aeronautics and Space Administration with respect to an invention of S. G. Ellis. Method of electrolytically binding a layer of semiconductors together. 3,396,057, 8-6-68, Cl. 136—89.
Webb, Jervis B., Co.: *See*—
Dehne, Clarence A., and Folsom. 3,395,651.
Weber, Gregory E., and D. P. McConnell, said McConnell assor. to Weber. Toilet bowl guard. 3,395,408, 8-6-68, Cl. 4—253.
Weber, Heinz, to Bremshey & Co. Collapsible umbrella. 3,395,717, 8-6-68, Cl. 135—26.
Weil, Edward D., and J. F. Porter, to Hooker Chemical Corp. Adducts of hexahalocyclopentadiene with alkadienes. 3,396,201, 8-6-68, Cl. 260—648.
Weisberg, Eugene, and S. Lenox, to Pfaudler, Ritter Corp. Reverse flow reactor and process. 3,395,654, 8-6-68, Cl. 110—8.
Weise, Irvin B., and H. G. Butler, to Anderson, Greenwood & Co. Check valve. 3,395,727, 8-6-68, Cl. 137—527.4.
Weiss, Wolfgang: *See*—
Muhlbauer, Ernst, and Weiss. 3,396,174.
Welch, Clark M., to United States of America, Agriculture. Vinylsulfonylethyl-hydroxy ethers. 3,396,198, 8-6-68, Cl. 260—607.
Welch, Clark M.: *See*—
Wade, Ricardo H., Welch, and Bennett. 3,395,971.
Weller, Ernest E., to Tile Council of America, Inc. Organic acid resistant compositions from epoxy resin, polyamines and clay. 3,396,138, 8-6-68, Cl. 260—37.
Weller, Ernest E., to Tile Council of America, Inc. Organic acid resistant compositions from epoxy resin, polyamine and ammonium clays. 3,396,140, 8-6-68, Cl. 260—37.
Weller, Ernest E., to Tile Council of America, Inc. Organic acid resistant compositions from epoxy resins, polycarbamates and clay. 3,396,141, 8-6-68, Cl. 260—37.
Wendler, Norman L., and D. Taub, to Merck & Co., Inc. Method of preparing 5-(α-dimethylaminopropylidene)-5H-dibenzo[a,d]-10,11-dihydrocycloheptene. 3,396,192, 8-6-68, Cl. 260—570.8.
Wenston, Robert A.: *See*—
Kugler, Ralph W., and Wenston. 3,396,270.
Wes Industries, Inc.: *See*—
Waltonen, Edward J. 3,396,260.
Wesselink, Gustaaf A., to North American Philips Co., Inc. Optical maser with an adjusting mechanism for a mirror. 3,396,343, 8-6-68, Cl. 331—94.5.
Westbury, Roy, to H. M. Hobson, Ltd. Feel simulators. 3,395,878, 8-6-68, Cl. 244—83.
Westelaken, Christianus M. T. Bulk blender. 3,395,898, 8-6-68, Cl. 259—180.

Westinghouse Air Brake Co.: *See*—
Callender, Earl R. 3,396,351.
Chovan, Dale A. 3,395,889.
Kugler, Ralph W., and Wenston. 3,396,270.
Morris, Robert B. 3,395,535.
Schmoeger, Ralph F. 3,395,620.
Temple, Fred. 3,395,729.
Westinghouse Electric Corp.: *See*—
Goldie, Harry. 3,396,388.
Weston Instruments, Inc.: *See*—
Richman, Peter L. 3,396,346.
Richman, Peter L., Towner, and Nordahl. 3,396,347.
Whalen, John G.: *See*—
Higgins, Charles R., and Whalen. 3,395,706.
Whalen, John G., and C. R. Higgins, to The Kendall Co. Convertible diaper. 3,395,707, 8-6-68, Cl. 128—284.
Wharton, Willard H., to The Dow Chemical Co. Composition comprising an ethylene polymer and an N-substituted unsaturated carboxylic amide. 3,396,137, 8-6-68, Cl. 260—32.6.
Whelply, Frank V.: *See*—
Jacoby, Charles H., and Whelply. 3,396,113.
Whipple, Richard E., to General Electric Co. Cross-wound open mesh coil. 3,396,356, 8-6-68, Cl. 336—189.
White, James C., to Sweetheart Plastics, Inc. Method for molding a composite foamed article. 3,396,062, 8-6-68, Cl. 156—244.
White, Ralph B. Collapsible combination cabinet and work platform. 3,395,959, 8-6-68, Cl. 312—317.
White, William W. Ski cap having safety features. 3,395,702, 8-6-68, Cl. 128—151.
Whitefin Holdings S.A.: *See*—
Teotino, Uberto, and Della Bella. 3,396,164.
Whitmore, Charles H., to Continental Machines, Inc. Fluid energy translating device. 3,395,643, 8-6-68, Cl. 103—5.
Whitmore, Henry B. Drum printer for recording blood pressure. 3,396,405, 8-6-68, Cl. 346—72.
Whitmore, Thomas C., to Eastman Kodak Co. Web treating device. 3,396,308, 8-6-68, Cl. 317—4.
Whittaker, Jack D., H. W. Loveday, D. R. Barbour, W. Tweedie, G. S. Dryden, to Greenbank Engineering Co. Ltd. and Easton & Johnson Ltd. Covers or hoods for the rollers of machines for the treatment of material in web form with humidified air or steam. 3,395,458, 8-6-68, Cl. 34—114.
Wiener, Ludwig D.: *See*—
Burdyn, Ralph F., and Wiener. 3,396,105.
Wiese, Herbert F.: *See*—
Butler, Thomas A., and Wiese. 3,396.109.
Wilde, Dennis, and R. Kenworthy, to Pilkington Bros. Ltd. Methods of and apparatus for carrying glass sheets. 3,395,943, 8-6-68, Cl. 302—31.
Willett, Roland L.: *See*—
Brandt, Harold A. 3,395,950.
Williams, Alan, to Tinnerman Products, Inc. Plastic fastener with annular rebate portions. 3,395,604, 8-6-68, Cl. 85—82.
Williams, John H., to Oak Electro/Netics Corp. Blockout mechanism for push button switch. 3,395,590, 8-6-68, Cl. 74—483.
Williams, William J.: *See*—
Cox, Frank T., and Williams. 3,395,584.
Wilson, Burton D.: *See*—
Burness, Donald M., and Wilson. 3,396,127.
Wilson, Gordon A., Jr., to McGraw-Edison Co. Tap changer. 3,396,248, 8-6-68, Cl. 200—11.
Wilson, Melvin G., to International Business Machines Corp. Automatic focusing system for cathode ray tubes. 3,396,304, 8-6-68, Cl. 315—10.
Wilson, Reginald D., to The Wilson Switch Co. Safety switch for vehicles. 3,396,352, 8-6-68, Cl. 335—170.
Wilson Switch Co., The: *See*—
Wilson, Reginald D. 3,396,352.
Wiltshire, Arthur J., and E. C. Pavlovich, to Structural Fibers, Inc. Molded cylinders. 3,395,735, 8-6-68, Cl. 138—141.
Winegard Co., The: *See*—
Winegard, John R. 3,396,399.
Winegard, John R., to The Winegard Co. Ultra-high frequency fishborne type television antenna. 3,396,399, 8-6-68, Cl. 343—811
Winegartner, Edgar C., and D. G. Walker; said Winegartner assor. to Esso Research and Engineering Co. Separation of beryllium halides from other metal halides. 3,395,973, 8-6-68, Cl. 23—15.
Winkler, Alfred, W. Hofmann, and K. Deeg, to Agfa-Gevaert Aktiengesellschaft. Slide projector. 3,395,474, 8-6-68, Cl. 40—79.
Winkler & Dunnebier Maschinenfabrik und Eisen-Giesserei: *See*—
Seyl, Peter. 3,395,624.
Winterburn, John A., to The Thermal Syndicate Ltd. Process for producing cellulated silica. 3,396,043, 8-6-68, Cl. 106—40.
Wirfelt, Sven A. O., to Sandvikens Jerverks AB. Cutting insert for chip cutting machining. 3,395,434, 8-6-68, Cl. 29—95.
Wirt, Leon A., to Caterpillar Tractor Co. Diagonal bracing and bulldozer blade mounting. 3,395,764, 8-6-68, Cl. 172—803.
Wiseman, James V., and H. D. Hellmers, to Stauffer Chemical Co. Rotary trona calciner. 3,395,906, 8-6-68, Cl. 263—33.
Wislocky, Joseph, to International Rectifier Corp. Compression bonded semiconductor device with hermetically sealed subassembly. 3,396,316, 8-6-68, Cl. 317—234.
Witt, Wilmer E.: *See*—
Sousek, Eugene A., and Witt. 3,395,866.
Wofford, Clinton F., W. R. Busler, and H. L. Hsieh, to Phillips Petroleum Co. Alkene oxide polymerization. 3,396,125, 8-6-68, Cl. 260—2.
Wolcott, Edson R., deceased; S. D. Wolcott, executrix. Ionic separator. 3,396,097, 8-6-68, Cl. 204—300.
Wolcott, Sallie D.: *See*—
Wolcott, Edson R. 3,396,097.
Wolf, Burton M., J. K. Reber, and R. C. Purcell, to The Firestone Tire & Rubber Co. Reinforcing fabric for tires. 3,395,744, 8-6-68, Cl. 152—358.
Wolfe, Merritt W., to The Goodyear Tire & Rubber Co. Camelback. 3,396,072, 8-6-68, Cl. 161—151.
Wolfe, Paul G., to Philco-Ford Corp. Transistorized deflection system with protective means. 3,396,309, 8-6-68, Cl. 317—20.
Wolff, George D. Speed sensing method and apparatus. 3,395,718, 8-6-68, Cl. 137—12.
Wolfsberg, Kurt, and W. R. Daniels, to United States of America, Atomic Energy Commission. Concentration of transplutonium actinides from dirt samples. 3,395,992, 8-6-68, Cl. 23—338.
Wollstein, Leo A.: *See*—
Lewis, George D., Jr., and Wollstein. 3,395,660.
Woma Apparatebau Wolfgang Maasberg & Co., G.m.b.H.: *See*—
Heinrich, Willi. 3,395,722.
Woodcock, Ray E., to Allegheny Ludlum Steel Corp. Hot metal level detector. 3,395,908, 8-6-68, Cl. 266—34.
Woods Industries, Inc.: *See*—
Woods, Verle W., and Turney. 3,396,008.
Woods, Verle W., and W. D. Turney, to Woods Industries, Inc. Method of increasing blossom germination. 3,396,008, 8-6-68, Cl. 71—97.
Worden, Donald G. and F. C., R. O. Diedrichs, and R. E. Trowbridge, to D. G. and F. C. Worden. Chess machine. 3,395,463, 8-6-68, Cl. 35—8.
Worden, Fred C.: *See*—
Worden, Donald G. and F. C., Diedrichs, and Trowbridge. 3,395,463.
Wueger, Karl W., to Crompton & Knowles Corp. Pneumatic filling inserter. 3,395,737, 8-6-68, Cl. 139—126.
Wyss, Escher, Aktiengesellschaft: *See*—
Ruegg, Rudolf. 3,395,796.
Xerox Corp.: *See*—
Button, Peter A., Miller, and King. 3,396,235.
Del Vecchio, George D., and Perry. 3,395,913.
Shimabukuro, George T. 3,396,322.
Yamauchi, Kakuro, to Kokusai Denshin Denwa Kabushiki Kaisha. Signal converting system for start-stop telegraph signals. 3,396,239, 8-6-68, Cl. 178—26.
Yanaka, Takashi, to Nihon Denshi Kabushiki Kaisha. Magnetic flux leakage guide for magnetic electron lenses. 3,396,299, 8-6-68, Cl. 313—84.
Yarborough, Joe C.: *See*—
Menges, Jacob T. 3,395,859.
Yeadon, David A., E. T. Rayner, G. B. Verburg, L. L. Hooper, Jr., F. G. Dollear, and H. P. Dupuy, to United States of America, Agriculture. Intumescing fire-retardant coating compositions and method for making, same. 3,396,129, 8-6-68, Cl. 260—22.
Yearwood, Donald R., to J. J. Mullen. Vessel for transporting liquefied gas at about ambient pressure. 3,395,548, 8-6-68, Cl. 62—45.
Young, F. A., Machine Co., Inc.: *See*—
Bookout, Conrad B. 3,395,526.
Young, Geoffrey T., and B. O. Hanford, to National Research Development Corp. Use of esters of N,N-dialkylhydroxylamines and 1-hydroxypiperidine for the synthesis of peptides and other amides. 3,396,157, 8-6-68, Cl. 260—112.5.
Young, William G., and F. G. Horning, to The Salem Tool Co. Lateral augering miner with a flat loop conveyor. 3,395,940, 8-6-68, Cl. 299—56.
Young, William G., F. G. Horning, and W. D. Carothers, to The Salem Tool Co. Rotary auger mining barrel head. 3,395,941, 8-6-68, Cl. 299—90.
Yuan, Lloyd T.-W., to Consolidated Electrodynamics Corp. Magnetoresistive transducer. 3,396,328, 8-6-68, Cl. 323—75.
Yumoto, Hirosuke, K. Harada, and M. Itoga, to Toyo Rayon Kabushiki Kaisha. Process for stretching polypropylene film. 3,396,216, 8-6-68, Cl. 264—25.
Zahn, Eric H.: *See*—
Overby, Grant E., and Zahn. 3,395,455.
Zeise, Gunter: *See*—
Burger, Hermann, and Zeise. 3,395,491.
Zelina, William B.: *See*—
Buchanan, James L., and Zelina. 3,396,338.
Zenith Radio Corp.: *See*—
Hendrickson, Melvin C., and Morris. 3,396,232.
Zeuthen & Aagaard A/S: *See*—
Zeuthen, Karl G., and Larsson. 3,396,234.
Zeuthen, Karl G., and S. E. Larsson, to Zeuthen & Aagaard A/S. Apparatus for perforating a layer in a master. 3,396,234, 8-6-68, Cl. 178—6.6.
Zimmerman, Hollis P., Jr., to Chrysler Corp. Steering device for amphibious vehicle. 3,395,671, 8-6-68, Cl. 115—1.
Zinser-Textilmaschinen Gesellschaft mit beschrankter Haftung: *See*—
Balassa, Imre. 3,395,524.
Zoebfeld, Gunther, to Rotron Mfg. Co., Inc. Vortex compressor. 3,395,853, 8-6-68, Cl. 230—22.
Zweegers, Petrus W. Mowing machines. 3,395,522, 8-6-68, Cl. 56—295.
Zweig, Arnold: *See*—
Clausen, Victor H., and Zweig. 3,395,915.
Zwickert, Charles. Sound absorbing panels between ceilings. 3,395,504, 8-6-68, Cl. 52—144.
Zysk, Stephen: *See*—
Borg, Tore E., Elliott, and Zysk. 3,396,357.

CLASSIFICATION OF PATENTS

ISSUED AUGUST 6, 1968

NOTE.—First number, class; second number, subclass; third number, patent number

2– 14	3,395,406
4–172	3,395,407
253	3,395,408
5– 13	3,395,409
8– 31	3,395,969
116.2	3,395,970
120	3,395,971
9–310	3,395,410
	3,395,411
13– 26	3,396,228
27	3,396,229
15– 3	3,395,412
4	3,395,413
93	3,395,414
121	3,395,415
228	3,395,416
230	3,395,417
231	3,395,418
246.5	3,395,419
16– 16	3,395,420
93	3,395,422
135	3,395,423
17– 7	3,395,421
18– 30	3,395,424
19–105	3,395,425
156.3	3,395,426
272	3,395,427
23– 4	3,395,972
15	3,395,973
17	3,395,974
18	3,395,975
22	3,395,976
53	3,395,978
91	3,395,977
108	3,395,979
121	3,395,980
192	3,395,981
199	3,395,982
200	3,395,983
203	3,395,984
204	3,395,985
	3,395,986
230	3,395,987
260	3,395,988
263	3,395,989
284	3,395,990
325	3,395,991
338	3,395,992
24– 81	3,395,428
125	3,395,429
26– 3	3,395,430
27– 19	3,395,431
28– 1	3,395,432
62	3,395,433
29– 95	3,395,434
103	3,395,435
149.5	3,395,436
	3,395,437
183	3,395,438
195	3,395,993
203	3,395,439
428	3,395,440
441	3,395,441
	3,395,442
471.7	3,395,443
529	3,395,444
569	3,395,445
577	3,395,446
588	3,395,447
596	3,395,448
	3,395,449
603	3,395,450
	3,395,451
621	3,395,452
30–293	3,395,453
32– 2	3,395,454
6	3,395,455
33– 82	3,395,456
174	3,395,457
34– 52	3,395,459
114	3,395,458
35– 5	3,395,460
6	3,395,461
8	3,395,462
	3,395,463
9	3,395,464
37– 2	3,395,465
43	3,395,466
195	3,395,467
38– 55	3,395,468
38– 69	3,395,469
40– 2	3,395,470
28	3,395,471
32	3,395,472
79	3,395,473
	3,395,474
106.54	3,395,475
	3,395,476
158	3,395,477
42– 1	3,395,478
50	3,395,479
43– 42.09	3,395,480
46– 6	3,395,481
47	3,395,482
104	3,395,483
151	3,395,484
47– 20	3,395,485
34	3,395,486
58	3,395,487
49–204	3,395,488
381	3,395,489
449	3,395,490
51– 34	3,395,491
50	3,395,492
90	3,395,493
161	3,395,494
170	3,395,495
220	3,395,496
231	3,395,497
284	3,395,498
371	3,395,499
52– 29	3,395,500
30	3,395,501
73	3,395,502
114	3,395,503
144	3,395,504
276	3,395,505
349	3,395,506
390	3,395,507
530	3,395,508
53– 48	3,395,509
55– 20	3,395,510
23	3,395,511
80	3,395,512
86	3,395,513
97	3,395,514
257	3,395,515
270	3,395,516
285	3,395,517
290	3,395,518
304	3,395,519
56–235	3,395,520
295	3,395,521
	3,395,522
328	3,395,523
57– 34	3,395,524
	3,395,525
102	3,395,526
140	3,395,527
145	3,395,528
153	3,395,529
	3,395,530
58– 90	3,395,531
115	3,395,532
129	3,395,533
60– 39.29	3,395,534
54.5	3,395,535
	3,395,536
	3,395,537
243	3,395,538
244	3,395,539
61– 11	3,395,540
28	3,395,541
45	3,395,542
53.7	3,395,543
66	3,395,544
72.6	3,395,545
62– 10	3,395,546
45	3,395,548
58	3,395,547
63	3,395,549
400	3,395,550
64– 3	3,395,551
11	3,395,552
15	3,395,553
65– 17	3,395,994
19	3,395,995
27	3,395,996
30	3,395,997
	3,395,998
65– 30	3,395,999
104	3,396,000
115	3,396,001
154	Re.26,435
267	3,396,002
66–172	3,395,554
70– 39	3,395,555
93	3,395,556
285	3,395,557
364	3,395,558
71– 34	3,396,003
39	3,396,004
70	3,396,005
77	3,396,007
92	3,396,006
97	3,396,008
115	3,396,009
72– 17	3,395,559
66	3,395,560
308	3,395,561
350	3,395,562
408	3,395,563
73– 1	3,395,564
4	3,395,565
6	3,395,566
23.1	3,395,567
35	3,395,568
	3,395,569
45.2	3,395,570
67.2	3,395,571
.8	3,395,572
104	3,395,573
116	3,395,574
119	3,395,575
178	3,395,576
188	3,395,577
197	3,395,578
199	3,395,579
368.3	3,395,580
398	3,395,581
446	3,395,582
514	3,395,583
74–110	3,395,584
124	3,395,585
230.17	3,395,586
	3,395,587
405	3,395,588
471	3,395,589
483	3,395,590
501	3,395,591
502	3,395,592
569	3,395,593
606	3,395,594
75– 30	3,396,010
60	3,396,011
62	3,396,012
123	3,396,013
130.5	3,396,014
214	3,396,015
83–174	3,395,595
409	3,395,596
417	3,395,597
663	3,395,598
84– 95	3,395,599
478	3,395,600
85– 32	3,395,601
	3,395,602
47	3,395,603
82	3,395,604
88– 1	3,395,605
14	3,395,606
	3,395,607
	3,395,608
23	3,395,609
24	3,395,610
	3,395,611
	3,395,612
89–146	3,395,613
90– 24	3,395,614
91–363	3,395,615
374	Re.26,431
412	3,395,616
443	3,395,617
92– 24	3,395,618
51	3,395,619
63	Re.26,432
161	3,395,620
169	3,395,621
93– 35	3,395,622
36.01	3,395,623
93– 61	3,395,624
94– 7	3,395,625
50	3,395,626
51	3,395,627
95– 1	3,395,628
.1	3,395,629
11	3,395,630
77.5	3,395,631
85	3,395,632
96– 1.8	3,396,016
27	3,396,017
29	3,396,018
33	3,396,019
	3,396,020
46	3,396,021
66.5	3,396,022
67	3,396,023
69	3,396,024
83	3,396,025
94	3,396,026
	3,396,027
109	3,396,028
111	3,396,029
114	3,396,030
98– 38	3,395,633
99– 48	3,396,031
77.1	3,396,032
80	3,396,033
93	3,396,034
94	3,396,035
100	3,396,036
118	3,396,037
135	3,396,038
136	3,396,039
186	3,396,040
204	3,396,041
236	3,395,634
275	3,395,635
100– 93	3,395,636
212	3,395,637
101–216	3,395,638
426	3,395,639
102– 16	3,395,640
19	3,395,641
24	3,395,642
103– 5	3,395,643
87	3,395,644
103	3,395,649
111	3,395,645
126	3,395,646
278	3,395,647
104– 25	3,395,648
162	3,395,650
249	3,395,651
106– 1	3,396,042
40	3,396,043
66	3,396,044
243	3,396,045
287	3,396,046
107– 8	3,395,652
57	3,395,653
110– 8	3,395,654
15	3,395,655
18	3,395,656
22	3,395,657
112– 2	3,395,658
79	3,395,659
123	3,395,660
220	3,395,661
235	3,395,662
114– 28	3,395,663
39	3,395,664
51	3,395,665
66.5	Re.26,434
	3,395,666
122	3,395,667
206	3,395,668
238	3,395,669
	3,395,670
115– 1	3,395,671
	3,395,672
117– 8.5	3,396,047
51	3,396,048
94	3,396,049
139.4	3,396,050
161	3,396,051
201	3,396,052
217	3,396,053
227	3,396,054
	3,396,055
118– 2	3,395,673
49.1	3,395,674
119–120	3,395,675
122– 32	3,395,676
235	3,395,677
406	3,395,678
123– 73	3,395,679
78	3,395,680
119	3,395,681
139	3,395,682
140	3,395,683
148	3,395,684
	3,395,685
	3,395,686
179	3,395,687
180	3,395,688
182	3,395,689
191	3,395,690
126– 25	3,395,691
30	3,395,692
92	3,395,693
343.5	3,395,694
369	3,395,695
128– 2	3,395,696
	3,395,697
.05	3,395,698
.08	3,395,699
145.5	3,395,700
146.5	3,395,701
151	3,395,702
194	3,395,703
218	3,395,704
276	3,395,705
284	3,395,706
	3,395,707
	3,395,708
305	3,395,709
350	3,395,710
351	3,395,711
539	3,395,712
131– 10.7	3,395,713
15	3,395,714
184	3,395,715
132– 40	3,395,716
135– 26	3,395,717
136– 6	3,396,056
89	3,396,057
134	3,396,058
137– 12	3,395,718
22	3,395,719
81.5	3,395,720
87	3,395,721
108	3,395,722
318	3,395,724
355.22	3,395,723
468	3,395,726
512.15	3,395,725
525	3,395,728
527.4	3,395,727
543.19	3,395,729
561	3,395,730
610	3,395,731
636.2	3,395,732
	3,395,733
637	3,395,734
138–141	3,395,735
139–115	3,395,736
126	3,395,737
196	3,395,865
385	3,395,738
141– 6	3,395,739
392	3,395,740
143–133	3,395,741
146– 78	3,395,742
148–171	3,396,059
149– 42	3,396,060
151– 30	3,395,743
152–358	3,395,744
361	3,395,745
156–178	3,396,061
244	3,396,062
331	3,396,063
335	3,396,064
	3,396,065
401	3,396,066
159– 47	3,395,746
161– 5	3,396,067
38	3,396,068
117	3,396,069
119	3,396,070
161–150	3,396,071
151	3,396,072
173	3,396,073
199	3,396,074
	3,396,075
162– 33	3,396,076
164– 95	3,395,747
103	3,395,748
122	3,395,749
259	3,395,750
260	3,395,751
165– 16	Re.26,430
55	3,395,752
	3,395,753
185	3,395,754
166– .5	3,395,755
36	3,395,756
41	3,395,757
100	3,395,758
155	3,395,759
170–135.4	3,395,760
160.32	3,395,762
	3,395,763
.5	3,395,761
172–803	3,395,764
173– 13	3,395,765
23	3,395,766
174– 72	3,396,230
73	3,396,231
175–293	3,395,767
176– 15	3,396,077
17	3,396,078
43	3,396,079
67	3,396,080
177–225	3,395,768
178– 5.1	3,396,232
.4	3,396,233
6.6	3,396,234
	3,396,235
7.1	3,396,236
.3	3,396,237
26	3,396,238
	3,396,239
69	3,396,240
179– 1	3,396,241
18	3,396,242
100	3,396,244
.3	3,396,243
107	3,396,245
180– 64	3,395,769
65	3,395,770
79.2	3,395,771
127	3,395,772
	3,395,773
181– .5	3,395,774
33	3,395,775
182–108	3,395,776
187– 8.59	3,395,777
188– 20	3,395,778
32	3,395,779
73	3,395,780
96	3,395,781
191– 58	3,396,246
192– 67	3,395,782
83	3,395,783
195– 7	3,396,081
31	3,396,082
36	3,396,083
127	3,396,084
198– 24	3,395,784
38	3,395,785
134	3,395,786
200– 5	3,396,247
11	3,396,248
19	3,396,249
35	3,396,250
80	3,396,251
86	3,396,252
148	3,396,253
153	3,396,254
	3,396,255
160	3,396,256
166	3,396,257
202–183	3,396,086
187	3,396,085
238	3,396,088
203– 6	3,396,087
70	3,396,089
73	3,396,090
204– 11	3,396,091

CLASSIFICATION OF PATENTS

204–29	3,396,092
59	3,396,093
70	3,396,094
225	3,396,095
299	3,396,096
300	3,396,097
312	3,396,098
206–41	3,395,787
45.34	3,395,788
59	3,395,789
65	3,395,790
	3,395,791
80	3,395,792
208–107	3,396,099
188	3,396,100
313	3,396,101
209–3	3,395,793
73	3,395,794
74	3,395,795
139	3,395,796
214	3,395,797
260	3,395,798
210–1	3,395,799
7	3,396,102
23	3,396,103
54	3,396,104
66	3,395,800
68	3,395,801
90	3,395,802
122	3,395,803
130	3,395,804
179	3,395,805
345	3,395,806
376	3,395,807
444	3,395,808
211–59	3,395,809
126	3,395,810
178	3,395,811
212–66	3,395,812
214–1	3,395,813
6	3,395,814
16.1	3,395,815
138	3,395,816
370	3,395,817
372	3,395,818
451	3,395,819
671	3,395,820
215–1	3,395,821
11	3,395,822
217–40	3,395,823
219–10.53	3,396,258
69	3,396,259
89	3,396,260
90	3,396,261
121	3,396,262
127	3,396,263
211	3,396,264
212	3,396,265
220–5	3,395,824
47	3,395,825
60	3,395,826
76	3,395,827
90	3,395,828
221–15	3,395,829
63	3,395,830
222–1	3,395,831
14	3,395,832
61	3,395,833
63	3,395,834
99	3,395,835
215	3,395,836
277	3,395,837
402.14	3,395,838
479	3,395,839
566	3,395,840
225–65	3,395,841
226–62	3,395,842
227–10	3,395,843
228–1	3,395,844

228–1	3,395,845
5	3,395,846
53	3,395,847
229–17	3,395,848
19	3,395,849
36	3,395,850
72	3,395,851
87	3,395,852
230–22	3,395,853
	3,395,855
75	3,395,854
116	3,395,857
206	3,395,856
231	3,395,858
232–43.2	3,395,859
234–15	3,395,860
235–61.11	3,396,266
193	3,396,267
238–10	3,395,861
14	3,395,862
310	3,395,864
239–125	3,395,863
670	3,395,866
240–81	3,396,268
152	3,396,269
241–38	3,395,867
86	3,395,868
176	3,395,869
242–55.11	3,395,870
.13	3,395,871
71.8	3,395,872
107.4	3,395,873
244–3.2	3,395,874
17.11	3,395,875
23	3,395,876
33	3,395,877
83	3,395,878
108	3,395,879
137	3,395,880
139	3,395,881
246–218	3,396,270
249	3,396,271
248–318	3,395,882
480	3,395,883
249–4	3,395,884
250–41.9	Re.26,437
43.5	3,396,272
52	3,396,273
55	3,396,274
83.6	3,396,275
202	3,396,276
215	3,396,277
219	3,395,963
	3,396,278
221	3,396,279
223	3,396,280
239	3,396,281
251–11	3,395,885
163	3,395,889
229	3,395,886
234	3,395,887
256	3,395,888
333	3,395,890
252–8.5	3,396,105
.55	3,396,107
18	3,396,108
32.7	3,396,109
33.6	Re.26,433
	3,396,106
42.1	3,396,110
56	3,396,111
62	3,396,112
70	3,396,113
75	3,396,114
171	3,396,115
182	3,396,116
	3,396,117
301.4	3,396,118

252–301.4	3,396,119
	3,396,120
312	3,396,121
428	3,396,122
	3,396,123
465	3,396,124
253–77	3,395,891
254–79	3,395,892
190	3,395,893
259–1	3,395,894
43	3,395,895
96	3,395,896
148	3,395,897
180	3,395,898
260–2	3,396,125
.5	3,396,126
8	3,396,127
22	3,396,128
	3,396,129
23	3,396,130
	3,396,131
	3,396,132
28.5	3,396,133
	3,396,134
29.6	3,396,135
30.6	3,396,136
32.6	3,396,137
37	3,396,138
	3,396,139
	3,396,140
	3,396,141
41	3,396,142
	3,396,143
45.75	3,396,144
47	3,396,145
	3,396,146
	3,396,147
75	3,396,148
	3,396,149
77.5	3,396,150
78	3,396,151
79.5	3,396,152
80.7	3,396,153
.78	3,396,155
85.5	3,396,154
112.5	3,396,156
	3,396,157
209.6	3,396,158
239.1	3,396,159
.3	3,396,160
.55	3,396,161
240	3,396,162
	3,396,163
244	3,396,164
247.2	3,396,165
	3,396,166
248	3,396,167
292	3,396,168
294.7	3,396,169
299	3,396,170
326	3,396,172
.3	3,396,171
327	3,396,173
	3,396,174
	3,396,175
340.6	3,396,176
348	3,396,177
396	3,396,178
397.4	3,396,179
404.5	3,396,180
407	3,396,181
419	3,396,182
429	3,396,183
	3,396,184
.7	3,396,185
462	3,396,186
463	3,396,187
465	3,396,188

260–465.1	3,396,190
.3	3,396,189
485	3,396,191
521	3,396,193
543	3,396,194
570.8	3,396,192
578	3,396,195
606	3,396,196
.5	3,396,197
607	3,396,198
635	3,396,199
646	3,396,200
	3,396,201
653	3,396,202
663	3,396,204
668	3,396,203
669	3,396,206
679	3,396,207
680	3,396,205
683	3,396,208
856	3,396,209
859	3,396,210
897	3,396,211
938	3,396,212
978	3,396,213
261–22	3,395,899
29	3,395,900
80	3,395,901
112	3,395,902
	3,395,903
263–7	3,395,904
33	3,395,905
	3,395,906
264–1	3,396,214
3	3,396,215
25	3,396,216
27	3,396,217
35	3,396,218
40	3,396,219
65	3,396,220
315	3,396,221
266–12	3,395,907
34	3,395,908
36	3,395,909
41	3,395,910
269–31	3,395,911
271–16	3,395,912
64	3,395,913
68	3,395,914
74	3,395,915
88	3,395,916
272–59	3,395,917
273–27	3,395,918
101	3,395,920
134	3,395,921
	3,395,922
274–39	3,395,919
277–59	3,395,923
135	3,395,924
168	3,395,925
235	3,395,926
279–51	3,395,927
280–11.13	3,395,928
81	3,395,929
87	3,395,930
124	3,395,931
179	3,395,932
457	3,395,933
285–23	3,395,934
292–341.13	3,395,935
296–23	3,395,936
28	3,395,937
297–333	3,395,938
298–22	3,395,939
299–56	3,395,940
90	3,395,941
301–63	3,395,942
302–31	3,395,943

302–66	3,395,945
303–2	3,395,946
52	3,395,944
307–202	3,396,292
208	3,396,282
268	3,396,293
309	3,396,283
308–5	3,395,947
	3,395,948
9	3,395,949
36.2	3,395,950
72	3,395,951
122	3,395,952
183	3,395,954
187	3,395,955
.1	3,395,953
236	3,395,956
310–8.3	3,396,284
.7	3,396,285
9.1	3,396,286
	3,396,287
43	3,396,288
81	3,396,294
92	3,396,289
162	3,396,295
180	3,396,290
263	3,396,291
266	3,396,296
312–1	3,395,957
61	3,395,958
317	3,395,959
313–70	3,396,297
	3,396,298
84	3,396,299
93	3,396,300
210	3,396,301
300	3,396,302
352	3,396,303
315–10	3,396,304
12	3,396,305
22	3,396,306
221	3,396,307
317–4	3,396,308
20	3,396,309
39	3,396,310
81	3,396,311
101	3,396,312
	3,396,313
148.5	3,396,314
230	3,396,315
234	3,396,316
	3,396,317
	3,396,318
247	3,396,319
318–18	3,396,320
24	3,396,321
138	3,396,322
331	3,396,323
321–28	3,396,324
322–46	3,396,325
323–9	3,396,326
75	3,396,328
324–.5	3,396,329
6	3,396,330
30	3,396,331
43	3,396,334
51	3,396,335
62	3,396,332
70	3,396,333
103	3,396,336
109	3,396,337
117	3,396,338
126	3,396,339
325–138	3,396,340
477	3,396,341
328–262	3,396,342
331–94.5	3,396,343
	3,396,344

331–117	3,396,345
135	3,396,346
136	3,396,347
333–31	3,396,348
70	3,396,349
72	3,396,327
95	3,396,350
335–113	3,396,351
170	3,396,352
229	3,396,353
248	3,396,354
336–58	3,396,355
189	3,396,356
338–26	3,396,357
339–18	3,396,358
32	3,396,359
94	3,396,360
112	3,396,361
145	3,396,363
217	3,396,364
227	3,396,362
340–15.5	3,396,365
38	3,396,366
55	3,396,367
146.1	3,396,368
	3,396,369
163	3,396,370
172.5	Re.26,429
	3,396,371
	3,396,372
173.1	Re.26,436
174	3,396,373
187	3,396,374
236	3,396,375
267	3,396,376
324	3,396,377
	3,396,378
347	3,396,379
	3,396,380
	3,396,381
	3,396,382
	3,396,383
	3,396,384
404	3,396,385
409	3,396,386
410	3,396,387
343–5	3,396,388
	3,396,389
7	3,396,391
11	3,396,390
14	3,396,392
	3,396,393
100	3,396,394
113	3,396,395
708	3,396,396
754	3,396,397
811	3,396,399
814	3,396,398
872	3,396,400
346–1	3,396,401
29	3,396,402
33	3,396,403
34	3,396,404
72	3,396,405
350–150	3,395,960
160	3,395,961
215	3,395,962
351–63	3,395,964
352–221	3,395,965
424–3	3,396,222
200	3,396,223
263	3,396,224
275	3,396,225
280	3,396,226
343	3,396,227
431–1	3,395,967
22	3,395,966
45	3,395,968

CLASSIFICATION OF DESIGNS

D 1–3	211,844
27	211,845
D 2–2	211,846
315	211,847
361	211,848
415	211,849
D 4–16	211,850
17	211,851
D 5–4	211,852
D 9–33	211,853
42	211,854
170	211,855
	211,856
187	211,857

D 9–222	211,858
224	211,859
D10–8	211,860
D13–1	211,861
	211,862
	211,863
	211,864
	211,865
D14–3	211,866
24	211,867
D15–8	211,868
11	211,869
D16–2	211,870
D22–28	211,871

D23–22	211,872
32	211,873
	211,874
41	211,875
55	211,876
	211,877
94	211,878
	211,879
D24–1	211,880
D26–10	211,881
14	211,882
D29–28	211,883
D30–1	211,884
D33–14	211,885

D33–14	211,886
24	211,887
	211,888
D34–4	211,889
D35–3	211,890
D36–8	211,891
D37–3	211,892
4	211,893
D42–7	211,894
	211,895
	211,896
8	211,897
D44–29	211,898

D44–29	211,899
D48–27	211,900
D49–1	211,901
	211,902
30	211,903
D54–1	211,904
	211,905
8	211,906
D56–1	211,907
2	211,908
D57–1	211,909
D61–1	211,910
	211,911

D61–1	211,912
D65–1	211,913
	211,914
D71–1	211,915
D72–1	211,916
D74–9	211,917
D80–10	211,918
D81–10	211,919
D83–1	211,920
D85–2	211,921
D90–1	211,922
20	211,923
D97–1	211,924

CLASSIFICATION OF PLANTS

P.–20	2,827
P.–39	2,826
P.–41	2,825

GEOGRAPHICAL INDEX OF RESIDENCE OF INVENTORS

(U.S. States, Territories and Armed Forces, the Commonwealth of Puerto Rico, and the Canal Zone)

(NOTE.—CODES ARE CHANGED AS OF JANUARY 1, 1967)

Alabama	1	Kentucky	21	Oregon	41
Alaska	2	Louisiana	22	Pennsylvania	42
American Samoa	3	Maine	23	Puerto Rico	43
Arizona	4	Maryland	24	Rhode Island	44
Arkansas	5	Massachusetts	25	South Carolina	45
California	6	Michigan	26	South Dakota	46
Canal Zone	7	Minnesota	27	Tennessee	47
Colorado	8	Mississippi	28	Texas	48
Connecticut	9	Missouri	29	Utah	49
Delaware	10	Montana	30	Vermont	50
District of Columbia	11	Nebraska	31	Virginia	51
Florida	12	Nevada	32	Virgin Islands	52
Georgia	13	New Hampshire	33	Washington	53
Guam	14	New Jersey	34	West Virginia	54
Hawaii	15	New Mexico	35	Wisconsin	55
Idaho	16	New York	36	Wyoming	56
Illinois	17	North Carolina	37	U.S. Air Force	57
Indiana	18	North Dakota	38	U.S. Army	58
Iowa	19	Ohio	39	U.S. Navy	59
Kansas	20	Oklahoma	40		

(First number in listing denotes location according to above key. Refer to patent number in body of the Official Gazette to obtain details as to inventor name, location, etc.)

PATENTS

1 : 3,395,506 3,395,550 3,395,876
2 : 3,395,798
4 : 3,395,710 3,396,340 3,396,383
6 : 3,395,408 3,395,415 3,395,420 3,395,439 3,395,453 3,395,454 3,395,490 3,395,500 3,395,502 3,395,507 3,395,510 3,395,520 3,395,533 3,395,555 3,395,558 3,395,577 3,395,598 3,395,600 3,395,640 3,395,647 3,395,663 3,395,664 3,395,665 3,395,680 3,395,681 3,395,691 3,395,693 3,395,698 3,395,699 3,395,705 3,395,720 3,395,733 3,395,734 3,395,748 3,395,760 3,395,766 3,395,768 3,395,775 3,395,781 3,395,790 3,395,813 3,395,814 3,395,823 3,395,825 3,395,833 3,395,835 3,395,841 3,395,870 3,395,892 3,395,899 3,395,905 3,395,906 3,395,917 3,395,922 3,395,928 3,395,934 3,395,950 3,395,963 3,396,097 3,396,100 3,396,119 3,396,165 3,396,166 3,396,170 3,396,184 3,396,197 3,396,202 3,396,213 3,396,235 3,396,246 3,396,305 3,396,314 3,396,316 3,396,318 3,396,322 3,396,328 3,396,339 3,396,345 3,396,358 3,396,375 3,396,391 3,396,395
8 : 3,395,406 3,395,485 3,395,582 3,395,611 3,395,987 3,396,060
9 : 3,395,460 3,395,497 3,395,512 3,395,528 3,395,572 3,395,597 3,395,623 3,395,641 3,395,657 3,395,678 3,395,754 3,395,755 3,395,776 3,395,821 3,395,838 3,395,851 3,395,881 3,395,890 3,396,048 3,396,078 3,396,153 3,396,212 3,396,214 3,396,231 3,396,269 3,396,366 3,396,402
10 : 3,396,150
12 : 3,395,410 3,395,411 3,395,463 3,395,486 3,395,625 3,395,666 3,395,675 3,395,702 3,395,795 3,395,900 3,395,980 3,396,040 3,396,182 3,396,287
13 : 3,395,560 3,395,659 3,395,660
15 : 3,396,401
17 : 3,395,412 3,395,435 3,395,452 3,395,462 3,395,466 3,395,468 3,395,472 3,395,489 3,395,552 3,395,585 3,395,588 3,395,590 3,395,610 3,395,614 3,395,627 3,395,638 3,395,679 3,395,690 3,395,703 3,395,731 3,395,732 3,395,750 3,395,764 3,395,770 3,395,771 3,395,778 3,395,784 3,395,792 3,395,800 3,395,834 3,395,839 3,395,855 3,395,856 3,395,885 3,395,886 3,395,896 3,395,911 3,395,930 3,395,937 3,395,942 3,395,946 3,396,035 3,396,039 3,396,082 3,396,090 3,396,101 3,396,102 3,396,104 3,396,114 3,396,123 3,396,186 3,396,209 3,396,215 3,396,218 3,396,219 3,396,232 3,396,237 3,396,336 3,396,342 3,396,354 3,396,396
18 : Re.26,431 3,395,518 3,395,523 3,395,601 3,395,742 3,395,860 3,395,914 3,395,921 3,395,956 3,395,959 3,396,224
19 : 3,395,674 3,395,868 3,396,399
20 : 3,395,503 3,395,521 3,395,525 3,395,997 3,396,009
21 : 3,395,620
22 : 3,395,477 3,395,777 3,395,791 3,395,971 3,396,129 3,396,198
24 : Re.26,434 3,395,495 3,395,498 3,395,516 3,395,569 3,395,701 3,395,806 3,395,880 3,395,926 3,396,004 3,396,044 3,396,084 3,396,103 3,396,120 3,396,300 3,396,310 3,396,349 3,396,352 3,396,388 3,396,389 3,396,397 3,396,398
25 : 3,395,407 3,395,427 3,395,478 3,395,565 3,395,636 3,395,708 3,395,709 3,395,711 3,395,737 3,395,812 3,395,994 3,396,026 3,396,030 3,396,038 3,396,049 3,396,059 3,396,062 3,396,074 3,396,091 3,396,108 3,396,135 3,396,146 3,396,233 3,396,319 3,396,346 3,396,347 3,396,359
26 : 3,395,416 3,395,417 3,395,441 3,395,442 3,395,445 3,395,496 3,395,499 3,395,537 3,395,543 3,395,574 3,395,576 3,395,606 3,395,608 3,395,612 3,395,617 3,395,644 3,395,648 3,395,651 3,395,655 3,395,671 3,395,673 3,395,688 3,395,716

26 : 3,395,718 3,395,725 3,395,747 3,395,780 3,395,786 3,395,802 3,395,807 3,395,818 3,395,830 3,395,861 3,395,919 3,395,927 3,395,936 3,396,006 3,396,007 3,396,012 3,396,096 3,396,113 3,396,136 3,396,142 3,396,160 3,396,169 3,396,195 3,396,247 3,396,260 3,396,296 3,396,323 3,396,385
27 : 3,395,428 3,395,479 3,395,556 3,395,615 3,395,643 3,395,670 3,395,689 3,395,794 3,395,828 3,395,847 3,395,848 3,395,852 3,395,877 3,395,935 3,395,961 3,395,968 3,396,047 3,396,112 3,396,180 3,396,210 3,396,245 3,396,276 3,396,304 3,396,326 3,396,386
29 : 3,395,409 3,395,546 3,395,696 3,395,740 3,395,767 3,395,944 3,396,068
30 : 3,395,975
31 : 3,395,836
33 : 3,396,356
34 : 3,395,519 3,395,548 3,395,553 3,395,594 3,395,603 3,395,607 3,395,633 3,395,654 3,395,661 3,395,662 3,395,667 3,395,707 3,395,746 3,395,752 3,395,763 3,395,811 3,395,862 3,395,863 3,395,872 3,395,875 3,395,910 3,395,977 3,396,013 3,396,020 3,396,034 3,396,042 3,396,106 3,396,124 3,396,132 3,396,138 3,396,139 3,396,140 3,396,141 3,396,159 3,396,176 3,396,183 3,396,192 3,396,206 3,396,208 3,396,211 3,396,223 3,396,226 3,396,227 3,396,230 3,396,241 3,396,244 3,396,268 3,396,282 3,396,283 3,396,293 3,396,331 3,396,369 3,396,387 3,396,392 3,396,394
35 : 3,395,464 3,395,992 3,396,178 3,396,187 3,396,200 3,396,201 3,396,272
36 : Re.26,429 Re.26,436 3,395,419 3,395,426 3,395,437 3,395,444 3,395,469 3,395,482 3,395,493 3,395,501 3,395,508 3,395,509 3,395,581 3,395,589 3,395,622 3,395,628 3,395,629 3,395,631 3,395,639 3,395,668 3,395,712 3,395,714 3,395,719 3,395,753 3,395,822 3,395,853 3,395,913 3,395,920 3,395,933 3,395,949 3,395,958 3,395,960 3,395,993 3,395,998 3,395,999 3,396,015 3,396,016 3,396,017 3,396,018 3,396,022 3,396,023 3,396,027 3,396,028 3,396,033 3,396,085 3,396,127 3,396,130 3,396,156 3,396,162 3,396,193 3,396,236 3,396,250 3,396,256 3,396,264 3,396,266 3,396,267 3,396,271 3,396,281 3,396,297 3,396,298 3,396,302 3,396,308 3,396,321 3,396,332 3,396,335 3,396,341 3,396,348 3,396,357 3,396,361 3,396,371 3,396,372 3,396,374 3,396,377 3,396,378 3,396,381
37 : 3,395,526 3,395,545 3,395,706 3,395,738 3,395,829 3,395,844 3,395,845 3,395,865 3,396,061 3,396,154 3,396,217 3,396,265
39 : Re.26,430 Re.26,432 Re.26,433 3,395,414 3,395,429 3,395,448 3,395,449 3,395,457 3,395,467 3,395,487 3,395,494 3,395,529 3,395,534 3,395,538 3,395,540 3,395,551 3,395,562 3,395,573 3,395,584 3,395,592 3,395,676 3,395,735 3,395,739 3,395,744 3,395,797 3,395,810 3,395,826 3,395,854 3,395,891 3,395,901 3,395,924 3,395,940 3,395,941 3,395,979 3,395,986 3,396,000 3,396,014 3,396,036 3,396,055 3,396,070 3,396,072 3,396,092 3,396,109 3,396,118 3,396,152 3,396,181 3,396,185 3,396,189 3,396,190 3,396,204 3,396,225 3,396,243 3,396,251 3,396,258 3,396,275 3,396,284 3,396,285 3,396,303 3,396,307 3,396,360 3,396,367 3,396,400
40 : 3,395,547 3,395,867 3,395,923 3,396,110 3,396,125 3,396,134 3,396,334
41 : 3,395,456 3,395,459 3,395,461 3,395,544 3,395,704 3,395,741 3,395,819 3,395,843 3,395,932
42 : Re.26,435 3,395,443 3,395,470 3,395,514 3,395,535 3,395,583 3,395,591 3,395,596 3,395,626 3,395,635 3,395,642 3,395,652 3,395,653 3,395,694 3,395,697 3,395,729 3,395,799 3,395,827 3,395,831 3,395,840 3,395,849 3,395,887 3,395,889 3,395,893 3,395,908 3,395,929 3,395,939 3,395,951 3,395,982 3,395,983 3,395,995 3,396,005 3,396,032 3,396,052 3,396,067 3,396,075 3,396,093 3,396,111 3,396,126 3,396,145 3,396,148 3,396,194 3,396,199 3,396,203 3,396,248 3,396,270 3,396,274 3,396,286 3,396,309 3,396,338 3,396,351 3,396,370 3,396,382 3,396,404
44 : 3,395,669 3,395,809
45 : 3,395,431 3,395,481 3,395,789 3,395,957 3,395,970
47 : 3,395,418 3,395,554 3,395,656 3,395,658 3,395,779 3,395,990 3,395,991 3,396,073 3,396,080 3,396,143 3,396,144 3,396,151 3,396,259 3,396,315
48 : 3,395,421 3,395,440 3,395,465 3,395,480 3,395,483 3,395,564 3,395,618 3,395,727 3,395,728 3,395,757 3,395,758 3,395,759 3,395,788 3,395,832 3,395,858 3,395,859 3,395,882 3,395,973 3,396,037 3,396,087 3,396,105 3,396,107 3,396,115 3,396,116 3,396,117 3,396,137 3,396,222 3,396,290 3,396,312 3,396,317 3,396,365 3,396,376 3,396,405
49 : 3,395,413 3,395,613
50 : 3,396,058
51 : 3,395,634 3,396,196 3,396,325 3,396,390
53 : 3,395,455 3,395,484 3,395,549 3,395,700 3,395,884 3,395,915 3,395,938 3,396,008 3,396,010 3,396,051 3,396,076 3,396,240
54 : 3,395,724
55 : 3,395,436 3,395,557 3,395,578 3,395,621 3,395,649 3,395,684 3,395,685 3,395,686 3,395,687 3,395,692 3,395,743 3,395,765 3,395,783 3,395,787 3,395,804 3,395,808 3,395,866 3,395,883 3,395,918 3,395,972 3,396,041 3,396,064 3,396,098 3,396,147 3,396,255 3,396,263 3,396,362 3,396,379

Design Patents

6 : 211,861 211,862 211,864 211,883 211,888 211,896 211,910 211,915 211,916 211,920
9 : 211,850
10 : 211,846
17 : 211,855 211,856 211,858 211,886 211,895 211,902 211,903
18 : 211,863 211,878 211,879
20 : 211,865
24 : 211,908
25 : 211,852 211,909 211,921 211,922
26 : 211,867 211,868 211,892
27 : 211,844 211,891 211,901 211,904
29 : 211,849
34 : 211,845 211,859 211,912 211,914
36 : 211,847 211,848 211,853 211,882 211,885 211,887 211,889 211,894 211,897 211,899 211,907 211,911 211,913 211,919 211,924
37 : 211,860
39 : 211,873 211,874 211,881 211,893 211,906
40 : 211,866 211,871 211,872 211,890
42 : 211,880 211,917
44 : 211,905
45 : 211,870
48 : 211,875 211,918
49 : 211,851
53 : 211,898
55 : 211,854 211,876 211,877

Plant Patents

6 : 2,825
6 : 2,826

U.S. DEPARTMENT OF COMMERCE

OFFICIAL GAZETTE of the UNITED STATES PATENT OFFICE

August 6, 1968 | Volume 853 | Number 1

TRADEMARKS

NOTICES

Official Mailing Address

The official mailing address for all communications sent to the Patent Office remains:

Commissioner of Patents
Washington, D.C. 20231

The physical location of the Office is 2021 Jefferson Davis Highway, Arlington, Va. This address should not be used on mail sent to the Patent Office.

C. A. KALK,
Director of Administration.

June 25, 1968.

Trademark Suits

Notices under 15 U.S.C. 1116; Trademark Act of July 5, 1946

Reg. No. 293,974. (See 2,520,092.)

Reg. No. 301,328. (See Re. 21,023.)

Reg. No. 399,390 (HELI-COIL), Aircraft Screw Products Company, Incorporated, Spark plug bushings; **Reg. No. 419,109,** same, Tools, apparatus and machines for use in connection with screw connections and their parts—namely, screw-thread-tapping tools, coiling machines for wire thread inserts, tools for inserting and extracting wire thread bushings, staking tools for securing thread bushings in boss members; **Reg. No. 419,476,** same, Screw connections and parts of screw connections—namely, screws, bolts, studs, nuts, thread inserts and thread bushings, for use in drilled or threaded holes; **Reg. No. 514,560,** same, Heli-Coil Corporation, Gages for use in screw connections with or without wire thread—namely, screw thread gages and flush gages; **Reg. No. 516,681,** same, Aircraft Screw Products Company, Inc., Tools, apparatus and machines for use in connection with screw connections and their parts—namely, screw-thread-tapping tools, coiling machines for wire thread inserts, tools for inserting and extracting wire thread bushings, staking tools for securing thread bushings in boss members; **Reg. No. 707,397,** same,

CONDITION OF TRADEMARK APPLICATIONS AS OF JUNE 30, 1968

Total number of applications awaiting action [excluding renewals and Sec. 12(c)]	15,157
Date of oldest new application	Feb. 9, 1967
Date of oldest amended application (filing date)	Oct. 23, 1965

C. M. WENDT, Director, Trademark Examining Operation TRADEMARK EXAMINING DIVISIONS, EXAMINERS AND TRADEMARK CLASSES UNDER EXAMINATION	Oldest Application	
	New	Amended
(I) L. J. BETTENDORF, Classes 2, 3, 4, 5, 7, 9, 10, 11, 27, 28, 30, 32, 33, 37, 38, 39, 40, 41, 42, 43, 50; Certification Marks, Classes A and B	6-27-67	11-8-66
(II) F. H. WETHERBEE, Classes 1, 6, 15, 18, 45, 46, 47, 48, 49, 51, 52; Collective Membership Mark, Class 200	9-28-67	12-1-65
(III) P. S. BALL, Classes 19, 21, 23, 26, 31, 34, 35, 36	10-2-67	10-23-65
(IV) M. E. ABRAMSON, Classes 8, 12, 13, 14, 16, 17, 20, 22, 24, 25, 29, 44; Service Marks, Classes 100, 101, 102, 103, 104, 105, 106, and 107	2-9-67	3-25-66
Renewals (All Classes)	6-4-68	....
Sec. 12(c) Publications (All Classes)	5-31-68	....

For the Quarter April 1, 1968 through June 30, 1968

Applications Filed	7,445
Registrations Issued	4,816
Renewals Issued	1,100
Cancellations under Section 8	1,337

Applications filed during the month of June 1968—2,280

Registrations Issued	504—No. 853,891 to No. 854,394
Renewals Issued	100

The TRADEMARK SECTION of the OFFICIAL GAZETTE, issued weekly, is mailed under the direction of the Superintendent of Documents, Government Printing Office, Washington, D.C. 20402 to whom all subscriptions should be made payable and all communications addressed; subscription price $12.00 per annum, foreign mailing $4.00 additional; single copies, 25 cents each.

PRINTED COPIES OF TRADEMARK REGISTRATIONS are furnished by the Patent Office for 20 cents each. Address orders to the Commissioner of Patents, Washington, D.C. 20231.

Heli-Coil Corporation, Self-locking wire fasteners, screw locks, and self locking nuts; **Reg. No. 739,898**, same, Screw thread inserts loaded in plastic strips for magazine feeding, **filed** May 15, 1968, D.C., C.D. Calif. (Los Angeles), Doc. 68-819-IH, *Heli-Coil Corporation v. J. S. Bennett, Alice Bennett, doing business as J. S. Bennett Co.*

Reg. No. 410,505. (See Re. 24,023.)

Reg. No. 419,109. (See Reg. No. 399,390.)

Reg. No. 419,476. (See Reg. No. 399,390.)

Reg. No. 426,777. (See 2,520,092.)

Reg. No. 514,560. (See Reg. No. 399,390.)

Reg. No. 516,681. (See Reg. No. 399,390.)

Reg. No. 681,757. (See Re. 24,023.)

Reg. No. 707,397. (See Reg. No. 399,390.)

Reg. No. 707,631 ("SEE-ALL" TELE-TECTOR), Norman Industries, Inc., Dummy cameras for mounting on a wall or ceiling in a store for the purpose of deterring shoplifting and reducing pilferage losses, **filed** Oct. 20, 1967, D.C., N.D. Ill. (Chicago), Doc. 67c1813, *Norman Industries, Inc. v. Se-Kure Controls, Inc.* Dismissed on stipulation with prejudice, Feb. 29, 1968.

Reg. No. 721,451. (See Reg. No. 831,484.)

Reg. No. 736,219. (See Reg. No. 823,555.)

Reg. No. 754,078 (MEDART), Blaw-Knox Company, Machines for straightening bars and tubes, machines for polishing bars and tubes, and machines for turning bars and tubes, **filed** Oct. 18, 1963, D.C., E.D. Mo. (St. Louis), Doc. 63c389(3), *Blaw-Knox Company v. Walter L. Siegcrist et al.* Judgment granting plaintiff an injunction against defendants; finding issues on defendants, counterclaim in favor of plaintiff and against defendants, Apr. 1, 1968.

Reg. No. 759,898. (See Reg. No. 399,390.)

Reg. No. 801,100 (A TO Z), A to Z Rental, Inc., Service of renting tools, equipment, and vehicles, **filed** Jan. 12, 1966, D.C., W.D. Tex. (El Paso), Doc. C-66-8-EP, *A to Z Rental, Inc. et al v. Leon J. Marcotte et al.* Judgment dismissed without prejudice as to defendant Mountain States Telephone Company and defendant De Weerd; plaintiff A to Z Rental, Inc. is owner of the service marks, trademarks and trade names A to Z and A to Z Rental Center, U.S. Reg. No. 801,100 and Texas Reg. No. 24,664; plaintiff Thayer, by virtue of franchise license agreement with plaintiff A to Z Rental has the sole right to the use in El Paso, Texas, of the service marks, trademarks and trade names A to Z and A to Z Rental Center. Defendants Leon J. Marcotte and A to Z Rental Center, Inc. and defendant A to Z Rental Center, guilty of infringing plaintiffs' rights in said marks, and hereby are permanently restained and enjoined, Feb. 21, 1966.

Reg. No. 815,012 ("MODELS COAT"), Swirl, Inc., Dresses, **filed** Apr. 19, 1968, D.C., E.D. Pa. (Philadelphia), Doc. 68-8-43C, *Swirl, Inc. v. Sears, Roebuck and Co.*

Reg. No. 823,555 (TP), Thiokol Chemical Corporation, Plasticizers for rubber and plastic compositions; **Reg. No. 736,219** (TP-90B), same, **filed** Apr. 13, 1967, D.C.N.J. (Newark), Doc. 416-67, *Thiokol Chemical Corporation v. Technical Processing, Inc.* Stipulation of dismissal, Mar. 28, 1968.

Reg. No. 825,455 (TACO TOWNE, ETC. AND DESIGN), Taco Towne, Inc., Drive-in restaurant services, **filed** Apr. 8, 1968, D.C., E.D. Mo. (St. Louis), Doc. 68c169(1), *Taco Towne International, Inc. v. Taco Town, Inc.*

Reg. No. 831,484 (WILDLIFE OF AMERICA), Roger Preuss, doing business as Wildlife of America, Calendars, prints and reproductions of original paintings; **Reg. No. 721,451**, same, Roger Preuss, doing business as Preuss Studio, Calendars, **filed** Sept. 29, 1967, D.C. Minn. (Minneapolis), Doc. 4-67-C-306, *Roger Preuss, doing business as Wildlife of America v. Joseph Hoover & Sons Co., and Les C. Kouba.* Stipulation and order of dismissal, May 14, 1968.

2,520,092, Frederickson, Bolling and Zinkil, VALVE; **Reg. No. 293,974** (CRANE), Crane Co., Heating materials—namely, check valves, stop valves and gate valves; screwed and flanged pipe fittings, cocks, stop check valves, emergency valves, butterfly valves, throttle valves, balanced valves, pressure regulators, temperature control valves, relief valves, exhaust relief valves, safety valves, blow-off valves, back pressure valves; boiler trimmings—namely, fusible plugs, union fittings, gauge cocks, drain cocks; and engine trimmings—namely, cylinder cocks, cylinder relief valves, gauge glass valves, vent valves, steam and ammonia separators for removing condensation, oil separators for removing oil from steam or air, strainer, steam traps, expansion pipe joints, pipe flanges; pipe unions, screwed and flanged; pipe supports and hangers, drip pockets, all made of brass, cast iron, malleable iron, ferrosteel, cast, forged, or rolled steel or other alloy; faucets, bibbs, plumbing waste fixtures, flush valves, mixing valves, ball cocks, and supply valves, all made of brass, cast iron, malleable iron or other alloys; lavatory and sink traps made of earthenware, iron, or brass; bath tubs, showers, closets, urinals, lavatories, sinks, laundry wash trays, flush tanks; fountain and bath room trimmings—namely, clothes hooks, shelves, towel bars, holders for tumblers and soap, all made of iron, brass, glass, marble, wood or earthenware; **Reg. No. 426,777** (DIAL-ESE), same, Supply and waste fittings—namely, spouts, handles and escutcheons, combined bath and shower supply fittings, shower supply fittings, supply valves, bath and shower valves, lavatory valves, combined lavatory supply and waste fittings, lavatory fittings, sink supply fittings with spray attachment, laundry faucets, bath supply fittings, bath faucets, seat rings, float supply valves, ball cocks, sink supply fittings, sink faucets, laundry tub fittings, and lavatory and bath faucets, **filed** July 12, 1967, D.C., N.D. Ill. (Chicago), Doc. 67c1214, *Crane Co. v. Chicago Specialty Mfg. Co.* By agreement dismissed with prejudice, Feb. 16, 1968.

Re. 24,023, J. Schmidinger, SNAP ACTION DEVICE; **Reg. No. 301,328** (TUNG SOL), Tung-Sol Electric Inc., Incandescent electric bulbs; **Reg. No. 410,505**, same, Combined reflector and electric lamp units, electric head lamps for vehicles, flash lamps, special electric lamps for photographic, signal and other purposes, electric switches, thermal switches, time delay switches, fluorescent lamp switches, current interrupters, electric flashers, current intermitters and relays, control circuits, resistance units, ballast units, gaseous glow discharge tubes, electronic tubes or valves, radio tubes and valves, thermionic detector and amplifier tubes and valves, oscillator tubes, rectifier tubes, crystal holders and header assemblies, and other thermionic and electronic tubes and circuits for use in radio receiving and transmitting sets and television receiving and transmitting sets; **Reg. No. 681,757**, same, Transistors, crystal rectifiers, gas voltage regulator tubes, and hydrogen thyratrons, **filed** June 1, 1965, D.C., N.D. Ill. (Chicago), *Joseph Schmidinger and Tung-Sol Electric Inc. v. C. E. Niehoff & Co., Inc.* Stipulation dismissing complaint and counterclaim with prejudice, Apr. 19, 1968.

MARKS PUBLISHED FOR OPPOSITION

SECTION 1

The following marks are published in compliance with section 12(a) of the Trademark Act of 1946. Application for the registration of these marks in more than one class has been filed as provided in section 30 of said act as amended by Public Law 772, 87th Congress, approved Oct. 9, 1962, 76 Stat. 769. Opposition under section 13 may be filed within thirty days of this publication. See Rules 2.101 to 2.105.

A separate fee of twenty-five dollars for each class opposed must accompany the opposition.

[NOTE: For publication of marks presented in applications for registration in one class, see section 2.]

SN 224,828. World Famous Sales Co., Chicago, Ill. Filed Aug. 2, 1965.

Class 2—Receptacles

For Canteens and Canteen Covers (Int. Cl. 21).

Class 3—Baggage, Animal Equipments, Portfolios, and Pocketbooks

For Knapsacks and Bags (Int. Cl. 18).

Class 9—Explosives, Firearms, Equipments, and Projectiles

For Gun Racks, Shell Belts, and Recoil Pads (Int. Cls. 13 and 20).

Class 19—Vehicles

For Inflatable Boats and Collapsible Oars (Int. Cl. 12).

Class 22—Games, Toys, and Sporting Goods

For Air Mattresses for Camping, Inflatable Surf Riders, Archery Racks, Billiard Cue Sticks, Billiard Ball and Cue Stick Racks, Billiard Accessories (Specifically Billiard Cue Sticks, Billiard Balls, and Cue Stick Racks), Target Throwers, and Waders (Int. Cl. 28).

Class 23—Cutlery, Machinery, and Tools, and Parts Thereof

For Hatches, Camp Shovels, Foot and Hand Operated Air Pumps, and Knives (Int. Cl. 8).

Class 26—Measuring and Scientific Appliances

For Compasses (Int. Cl. 9).

Class 34—Heating, Lighting, and Ventilating Apparatus

For Kerosene Camp Lanterns ((Int. Cl. 11).

Class 39—Clothing

For Foul Weather Gear, Specifically Storm Suits, Rain Wear, and Hunting Boots (Int. Cl. 25).

First use during January 1962.

SN 232,494. Centri-Spray Corporation, Livonia, Mich. Filed Nov. 12, 1965.

Owner of Reg. Nos. 620,295 and 620,767.

Class 23—Cutlery, Machinery, and Tools, and Parts Thereof

For Machines for Use in Surface Treatment of Articles Which Involve Washing, Abrasive Blasting, and/or Shot Peening and Includes Hydraulic Blast Equipment; Power Centrifugal Spray Type Dust and Fume Collectors; Paint Spray Booths; Rotatable Belt and Disk Oil Separators; Article Handling Equipment—Namely, Conveyors, Elevators, Turn-Tables, Parts Feed-Out Mechanisms, Parts Accumulating Devices and Power Loaders and Unloaders; Apparatus for Grit Recovery and/or Transport Useful in Cleaning and in Abrasive Blasting Processes; Pumps Used With Other Machinery, Air Pollution Control Equipment in the Nature of Air Scrubbers for Industrial Use, and Parts for the Foregoing (Int. Cls. 7 and 19).

First use on or about Aug. 1, 1960.

Class 31—Filters and Refrigerators

For Air, Gas, and Liquid Filters and Parts for the Foregoing (Int. Cl. 11).

First use on or about Oct. 22, 1964.

SN 235,879. Westrac Company, Torrance, Calif. Filed Jan. 5, 1966.

SURE-SEAL

Owner of Reg. Nos. 590,613, 617,470, and 617,753.

Class 23—Cutlery, Machinery, and Tools, and Parts Thereof

For Tools for Installation of Seals (Int. Cl. 12).

Class 35—Belting, Hose, Machinery Packing, and Nonmetallic Tires

For Mechanical Seals for Tractor Bearings, Axles and Wheels, Mechanical Seals for Truck Bearings, Axles and Wheels, and Grease Retaining Hub Cap Kits (Int. Cl. 8).

First use on or about Aug. 1, 1951.

SN 241,403. The Warner & Swasey Company, Cleveland, Ohio. Filed Mar. 21, 1966.

WARNER & SWASEY

Owner of Reg. Nos. 534,737 and 596,355.

Class 23—Cutlery, Machinery, and Tools, and Parts Thereof

For Tools and Tool Holders for Machine Tools, Turret Metal Punch Presses, Textile Machinery, Diggers, Loaders and Digging, Grading, Surface Modifying, and Material Moving and Material Loading Equipment and Apparatus (Int. Cl. 7).

First use at least as early as 1887.

Class 26—Measuring and Scientific Appliances

For Balancing Machines, Fatigue Testing Machines, and Spectrographic Apparatus for Analyzing Radiation and Numerical Controls for Machines (Int. Cl. 9).

First use 1960.

SN 251,853. Phrix-Werke Aktiengesellschaft, Hamburg, Germany. Filed Aug. 8, 1966.

REDON

Owner of German Reg. No. 646,321, dated Mar. 29, 1952.

Class 1—Raw or Partly Prepared Materials

For Spinning Fibers and Filler Material for Upholstery Padding (Int. Cl. 22).

Class 39—Clothing

For Men's, Women's, and Children's Knitted and Woven Dresses, Coats, Blouses, Suits, Jackets, Sweaters, Trousers, Shirts, Underwear, Corsets, Ties, Suspenders, Gloves, and Hosiery (Int. Cl. 25).

Class 42—Knitted, Netted, and Textile Fabrics, and Substitutes Therefor

For Table Cloths, Pillow Covers, Couch Covers, Blankets, Rugs, Curtains, Sheets, and Table Mats (Int. Cl. 24).

Class 43—Thread and Yarn

For Yarns for Producing Woven and Knitted Material (Int. Cl. 23).

Class 50—Merchandise Not Otherwise Classified

For Flags (Int. Cl. 24).

SN 252,501. VEB Staatliche Porzellan-Manufaktur Meissen, Meissen, Germany. Filed Aug. 16, 1966.

The mark is a fanciful design of the letters "AR."

Class 30—Crockery, Earthenware, and Porcelain

For Porcelain and Porcelain Goods of All Kinds—Namely, Dinnerware Made of Porcelain, Porcelain Cups and Saucers, Porcelain Trays, Porcelain Urns and Vases, Porcelain Flowerpots, and Porcelain Centerpieces (Int. Cl. 21).

Class 50—Merchandise Not Otherwise Classified

For Porcelain Statuettes and Ornamental Figurines of All Kinds—Namely, Figurines, Figurines Used for Chess Sets, Ornamental Animals and Birds, Busts, and Ornamental Dolls (Int. Cls. 21 and 28).

First use in the year 1709; in commerce in the year 1789.

SN 257,227. Cirillo Bros. Petroleum Co., Inc., Bronx, N.Y. Filed Oct. 26, 1966.

YOUR MONEY BUYS DEPENDABILITY

Class 6—Chemicals and Chemical Compositions

For Chemicals—Namely, Anti-Freeze and Solvents Containing Catalytic Agents (Int. Cl. 1).

Class 15—Oils and Greases

For Petroleum Products—Namely, Fuel Oils, Lubricants, Gasoline and Motor Oils, and Gas Line Antifreeze (Int. Cls. 1 and 4).

First use January 1955.

SN 261,743. Multiplex Company, St. Louis, Mo. Filed Dec. 30, 1966.

MULTIPLEX

Class 13—Hardware and Plumbing and Steam-Fitting Supplies

For Dispensing Faucets for Beverage Dispensers, and Parts Thereof (Int. Cl. 20).

Class 23—Cutlery, Machinery, and Tools, and Parts Thereof

For Carbonators and Non-Refrigerated and/or Heated Beverage Dispensers, and Parts Thereof (Int. Cl. 11).

Class 31—Filters and Refrigerators

For Refrigerated Beverage Dispensers and Parts Thereof (Int. Cl. 11).

First use about November 1902.

SN 270,732. Cargill, Incorporated, Minneapolis, Minn. Filed May 5, 1967.

Owner of Reg. No. 835,125.

Class 1—Raw or Partly Prepared Materials

For Seeds—Namely, Sunflower Seeds and Hybrid Seed Corn (Int. Cl. 31).
First use Apr. 15, 1967.

Class 6—Chemicals and Chemical Compositions

For Salt—Namely, General Purpose Salt; Pellets and Granulated Salt; Block Salt; Ice and Snow Melting Salt; Drilling Salt; Water Softening Salt; and Trace Mineral Salt (Int. Cl. 1).
First use Oct. 19, 1966.

Class 105—Transportation and Storage

For Storage of Goods of Others, and Transportation of Goods of Others by Rail, Water, and Truck (Int. Cl. 39).
First use April 1966.

SN 272,533. Generos de Punto Rafel, S.A., Barcelona, Spain. Filed May 29, 1967.

The representation shown on the drawing is fanciful and not that of a living individual.

Class 39—Clothing

For Sweaters, Pullovers, Jerseys, Undershirts, Shirts, Underdrawers, Knickers, Trousers, Coats, Dresses for Women, Skirts, Blouses, Pajamas and Caps (Int. Cl. 25).

Class 42—Knitted, Netted, and Textile Fabrics, and Substitutes Therefor

For Fabrics in the Piece for Making Jackets, Pullovers, Jerseys and Trousers (Int. Cl. 24).

First use March 1935; in commerce January 1961.

SN 273,636. Griffin Wellpoint Corporation, New York, N.Y. Filed June 12, 1967.

Applicant does not claim any exclusive right in the words "Wellpoint Systems" or "Insures Protection" apart from the mark as shown.

Class 100—Miscellaneous

For Leasing of Wellpoint Equipment (Int. Cl. 42).

Class 103—Construction and Repair

For Wellpoint Construction Services in the Field of Soil Drainage—Namely, Soil Dewatering and Soil Water Control (Int. Cl. 37).

First use Jan. 2, 1947.

SN 276,028. Multronics, Inc., Rockville, Md. Filed July 14, 1967.

MULTRONICS

Class 100—Miscellaneous

For Consulting Services in the Field of Radio Communication; Engineering, Design and Development of Electronic Equipment—Namely, Radio Communication Equipment and Test Equipment, Broadcast Transmitters, Antennas and Related Equipment and Components, and Radiation Detection Equipment (Int. Cl. 42).

Class 103—Construction and Repair

For Manufacture of Electronic Test Equipment, Radiation Detection Equipment, Radio Antennas, Radio Communication Equipment and Components to the Specifications of Others; and Erection and Maintenance of Communication Transmitting Stations and Antenna Systems for Others (Int. Cl. 37).

First use at least as early as Dec. 31, 1958.

SN 277,325. The Singer Company, New York, N.Y. Filed Aug. 2, 1967.

GO GO

Class 21—Electrical Apparatus, Machines, and Supplies

For Floor Polishers, Radios, Television Receivers, and Vacuum Cleaners (Int. Cl. 9).
First use May 26, 1967.

Class 23—Cutlery, Machinery, and Tools, and Parts Thereof

For Sewing Machines, Typewriters; and Cutlery—Namely, Scissors, Shears, and Seam Rippers (Int. Cls. 7, 8, and 16).
First use Apr. 13, 1967.

Class 32—Furniture and Upholstery

For Furniture—Namely, Sewing Machine Cabinets and Stools (Int. Cl. 20).
First use May 26, 1967.

Class 36—Musical Instruments and Supplies

For Phonographs (Int. Cl. 9).
First use Apr. 13, 1967.

Class 40—Fancy Goods, Furnishings, and Notions

For Sewing Aids—Namely, Tracing Kits, Tracing Wheels, and Sewing Boxes (Int. Cl. 26).
First use May 26, 1967.

Class 50—Merchandise Not Otherwise Classified

For Dress Forms (Int. Cl. 26).
First use May 26, 1967.

SN 281,254. Sternco Industries, Inc., Harrison, N.J. Filed Sept. 27, 1967.

Class 2—Receptacles

For Aquarium Tanks (Int. Cl. 16).
First use July 24, 1967.

Class 6—Chemicals and Chemical Compositions

For Preparations for Removing Chlorine From Water Intended for Aquarium Use; Chemical Agents Added to Water To Control Growth of Algae in Aquarium Tanks (Int. Cls. 1 and 5).
First use Aug. 29, 1967.

Class 13—Hardware and Plumbing and Steam-Fitting Supplies

For Fittings for Air and Water Pipes for Aquarium Tank Use (Int. Cl. 6).
First use Mar. 6, 1967.

Class 21—Electrical Apparatus, Machines, and Supplies

For Electric Lighting Fixtures for Aquariums—Namely, Reflectors (Int. Cl. 11).
First use Apr. 25, 1967.

Class 23—Cutlery, Machinery, and Tools, and Parts Thereof

For Pumps for Aquarium Tanks (Int. Cl. 7).
First use June 28, 1967.

Class 31—Filters and Refrigerators

For Filter Devices for Aquarium Tanks (Int. Cl. 11).
First use Apr. 19, 1967.

Class 35—Belting, Hose, Machinery Packing, and Nonmetallic Tires

For Air Line Tubing for Aquarium Tanks (Int. Cl. 17).
First use July 17, 1967.

Class 50—Merchandise Not Otherwise Classified

For Gravel, Marble Chips, Filter Floss, Air Release Stones and Backgrounds, All for Use in Aquarium Tanks; and Drinking Tubes for Animal Pet Cages (Int. Cl. 20).
First use Feb. 27, 1967.

SN 284,532. Beauchaine & Sons, Inc., Laconia, N.H. Filed Nov. 13, 1967.

BEAUCHAINE

Class 21—Electrical Apparatus, Machines, and Supplies

For Electrical Connectors (Int. Cl. 9).

Class 23—Cutlery, Machinery, and Tools, and Parts Thereof

For Electron Tube Pin Straightening Tools, Wire Manipulating Tools, Electron Tube Lifting Tools, Tweezers, Wrenches, Screwdrivers, and Threading Taps (Int. Cl. 8).

First use Mar. 1, 1960.

SN 286,298. IXL Appliances Inc., Hollis, N.Y. Filed Dec. 6, 1967.

IXL

Class 31—Filters and Refrigerators

For Refrigerators and Freezers (Int. Cl. 11).

Class 34—Heating, Lighting, and Ventilating Apparatus

For Cooking Ranges, Range Hoods and Ovens (Int. Cl. 11).

First use January 1967.

SN 287,249. The Interstate Folding Box Company, Middletown, Ohio. Filed Dec. 20, 1967.

FB

Class 2—Receptacles

For Paperboard Cartons and Folding Boxes (Int. Cl. 16).
First use Sept. 2, 1965.

Class 23—Cutlery, Machinery, and Tools, and Parts Thereof

For Box Making and Packgaing Machinery (Int. Cl. 7).
First use on or about Dec. 1, 1966.

Class 37—Paper and Stationery

For Plain and Coated Paperboard (Int. Cl. 16).
First use on or about Jan. 2, 1966.

SN 288,735. Jet Air Products Company, Dallas, Tex. Filed Jan. 15, 1968.

JET AIR

Class 6—Chemicals and Chemical Compositions

For Refrigerant; Leak Detector; Belt Dressing for Fan Belts or Other V-Belts; Rust Inhibitor; Pressurized Fluorinated Hydrocarbon for Use With Air Horns; and Air Freshener (Int. Cls. 1, 2, and 4).
First use Nov. 15, 1961.

Class 15—Oils and Greases

For Silicone Spray Lubricant; Lubricant and Sealant for Use in Air Conditioning Systems (Int. Cl. 4).
First use Sept. 10, 1965.

SN 291,238. Tucker Plastic Products Limited, Toronto, Ontario, Canada. Filed Feb. 16, 1968.

TARALENE

Owner of Reg. No. 841,446.

Class 2—Receptacles

For Plastic Housewares, viz, Serving Sets Consisting of Tray and Dishes; Relish Tray Sets; Vinegar and Oil Cruet Sets With Tray; Serving Dishes and Bowls; Salad Bowls; Serving Trays; Canister Sets; Tumblers; Salt and Pepper Sets With Tray; and Cake or Cheese Tray Sets Including Covers and Cutting Boards (Int. Cls. 8 and 21).
First use January 1967; in commerce January 1967.

Class 23—Cutlery, Machinery, and Tools, and Parts Thereof

For Plastic Serving Forks and Spoons (Int. Cl. 8).
First use Jan. 15, 1967; in commerce Jan. 15, 1967.

SECTION 2

The following marks are published in compliance with section 12(a) of the Trademark Act of 1946. Opposition under section 13 may be filed within thirty days of publication. See Rules 2.101 to 2.105.

A fee of twenty-five dollars must accompany the opposition.

[NOTE: For publication of marks presented in a combined application for registration in more than one class, see section 1.]

Class 1—Raw or Partly Prepared Materials

SN 270,501. Occidental Petroleum Corporation, Los Angeles, Calif. Filed May 2, 1967.

OXY

For Phosphate Bearing Ores (Int. Cl. 6).
First use in or about April 1965.

SN 274,404. The Borden Company, New York, N.Y. Filed June 21, 1967.

CLEARSEAL

For Laminated Vinyl Film, Sold in Rolls and Sheets, for General Use in the Industrial Arts (Int. Cl. 17).
First use Dec. 14, 1965.

SN 283,562. Potlatch Forests, Inc., San Francisco, Calif. Filed Oct. 27, 1967.

FIRE-PAK

For Fuel Unit Containing Starting Material and Combustible Fuel (Int. Cl. 4).
First use June 9, 1967.

SN 289,558. Medical Plastics Corporation of America, Greensboro, N.C. Filed Jan. 25, 1968.

MEDI-GARD

Owner of Reg. No. 829,172.
For Plastic Film and Rosin (Int. Cls. 2 and 17).
First use Mar. 3, 1965.

Class 2—Receptacles

SN 253,350. Stainless Ice-Tainer Company, San Antonio, Tex. Filed Aug. 29, 1966.

ICE-TAINER

For Insulated and Non-Insulated Containers and Chests, Portable Storage Bins, Cup Fillers, and Drain Cans (Int. Cl. 21).
First use Mar. 31, 1961.

SN 273,838. Robert Adell, Birmingham, Mich. Filed June 14, 1967.

Tissue Issue

For Tissue Dispenser (Int. Cl. 21).
First use May 5, 1967.

SN 274,173. Bemis Company, Inc., Minneapolis, Minn. Filed June 19, 1967.

STRESS-SAFE

For Plastic Bags (Int. Cl. 22).
First use Mar. 8, 1967.

SN 279,413. Rexall Drug and Chemical Company, d.b.a. Tupperware, Los Angeles, Calif. Filed Aug. 30, 1967.

THERMI-CICLE

For Plastic Mold for the Making of Ice Cubes and Frozen Confections (Int. Cl. 21).
First use July 25, 1967.

SN 280,825. Unipat Corporation of America, Chicago, Ill. Filed Sept. 20, 1967.

UNIPAT

For Dispensers for Pressure Sensitive Tape (Int. Cl. 21).
First use on or before Feb. 10, 1967.

SN 280,826. Unipat Corporation of America, Chicago, Ill. Filed Sept. 20, 1967.

ZIP N KLIP

For Dispensers for Pressure Sensitive Tape (Int. Cl. 21).
First use on or before Feb. 10, 1967.

SN 280,864. Anny Faltin, d.b.a. Jewelry Award Designs, New York, N.Y. Filed Sept. 21, 1967.

The Pillikin

For Ornamental Pill Box (Int. Cl. 21).
First use Sept. 12, 1967.

SN 291,266. Home Metal Products Company, Plano, Tex. Filed Feb. 16, 1968.

BAGIT-ALL

For Waste Receptacles (Int. Cl. 21).
First use Dec. 20, 1967.

SN 291,876. King-Seeley Thermos Co., Ann Arbor, Mich. Filed Feb. 26, 1968.

INSUL-SERVER

For Plastic Dishes (Int. Cl. 21).
First use Jan. 31, 1968.

SN 292,283. National Distillers and Chemical Corporation, d.b.a. National Distillers Products Co., Richmond, Va. Filed Mar. 1, 1968.

MAZE SEAL

For Plastic Bags (Int. Cl. 22).
First use January 1964.

SN 292,291. Product Research & Development Corp., Blue Bell, Pa. Filed Mar. 1, 1968.

QUIKEE-PAK

For Lunch Boxes (Int. Cl. 21).
First use Jan. 31, 1968.

SN 292,416. Plasti-Steel, Inc., Wichita, Kans. Filed Mar. 4, 1968.

PLASTI-STEEL

For Tanks or Receptacles Suitable for Either Permanent or Temporary Reusable Storage of Fresh Water, Salt Water, Chemicals, and Waste (Int. Cl. 6).
First use in or about March 1965.

SN 292,580. Hoerner Waldorf Corporation, St. Paul, Minn. Filed Mar. 6, 1968.

SATIN KOTE

For Paperboard Cartons (Int. Cl. 16).
First use Feb. 20, 1968.

SN 292,581. Hoerner Waldorf Corporation, St. Paul, Minn. Filed Mar. 6, 1968.

SHIELD KOTE

For Paperboard Cartons (Int. Cl. 16).
First use Feb. 20, 1968.

SN 292,582. Hoerner Waldorf Corporation, St. Paul, Minn. Filed Mar. 6, 1968.

GLO KOTE

For Paperboard Cartons (Int. Cl. 16).
First use Feb. 20, 1968.

SN 292,587. Lennox Industries Inc., Marshalltown, Iowa. Filed Mar. 6, 1968.

LENNOX

Owner of Reg. Nos. 665,065 and 710,628.
For Tanks and Cylinders for Fluids (Int. Cl. 6).
First use no later than April 1964.

SN 292,892. The Cornelius Company, Anoka, Minn. Filed Mar. 11, 1968.

CORCO

For Compressed Gas Cylinders (Int. Cl. 6).
First use at least as early as September 1961.

SN 293,224. CTP Industries Inc., Brooklyn, N.Y. Filed Mar. 14, 1968.

PLASTRUSIONS

For Plastic Bags (Int. Cl. 22).
First use Jan. 29, 1968.

SN 294,051. Illinois Tool Works Inc., Chicago, Ill. Filed Mar. 25, 1968.

FLAVOR-TRU

For Plastic Containers—Namely, Cups and the Like (Int. Cl. 21).
First use May 16, 1961.

SN 294,376. Continental Can Company, Inc., New York, N.Y. Filed Mar. 28, 1968.

CONO

For Metal Cans (Int. Cl. 6).
First use Feb. 21, 1968.

SN 295,394. West Bend Thermo-Serv, Inc., Anoka, Minn. Filed Apr. 10, 1968.

SIZZLE-SERVER

For Steak Platter Made of Plastic (Int. Cl. 21).
First use January 1968.

SN 295,396. West Virginia Pulp and Paper Company, New York, N.Y. Filed Apr. 10, 1968.

WING-PAK

For Corrugated Shipping Containers (Int. Cl. 16).
First use Mar. 19, 1968.

SN 297,636. The J. & B. Smith Co., Atlanta, Ga. Filed May 8, 1968.

THESCO

For Reconditioned Steel Drums (Int. Cl. 6).
First use Sept. 16, 1957.

Class 3 — Baggage, Animal Equipments, Portfolios, and Pocketbooks

SN 293,615. John J. Rehill, Jr., d.b.a. John Rehill Novelties, Wayne, N.J. Filed Mar. 19, 1968.

SOCK IT TO ME

For Utility Bags (Int. Cl. 18).
First use Mar. 8, 1968.

Class 4 — Abrasives and Polishing Materials

SN 276,128. Guilleaume-Werk, Beuel-Bonn, Rhine, Germany. Filed July 17, 1967.

OWL

The drawing is lined for red.
For Abrasive Materials—Namely, Abrasive Grinding Wheels, Abrasive Honing Stones in Block Form, and Abrasive Hand Stones (Int. Cl. 8).
First use Sept. 7, 1960; in commerce Sept. 7, 1960.

SN 277,692. National Automotive Parts Association, Chicago, Ill. Filed Aug. 7, 1967. COLLECTIVE MARK.

NAPA

For Abrasives—Namely, Grinding Wheels and Sanding Blocks (Int. Cl. 8).
First use Nov. 17, 1965.

SN 284,442. Bison Corporation, Canton, Ohio. Filed Nov. 9, 1967.

BISOSPRAY

Owner of Reg. No. 832,308.
For Liquid Buffing Compound for Finishing All Types of Ferrous and Non-Ferrous Metals (Int. Cl. 3).
First use on or about Sept. 10, 1967.

SN 287,774. Thorium Limited, London, England. Filed Dec. 28, 1967.

CERIROUGE

Owner of British Reg. No. 628,146, dated Mar. 13, 1944.
For Rouge for Polishing (Int. Cl. 3).

Class 5 — Adhesives

SN 277,690. National Automotive Parts Association, Chicago, Ill. Filed Aug. 7, 1967. COLLECTIVE MARK.

NAPA

For Pressure-Sensitive Adhesives and Adhesive Tape (Int. Cls. 1 and 17).
First use Nov. 17, 1965.

SN 297,260. Imperial Adhesives, Inc., Cincinnati, Ohio. Filed May 3, 1968.

ZIPAK

For Synthetic Resinous Adhesives (Int. Cl. 1).
First use at least as early as Feb. 1, 1968.

Class 6 — Chemicals and Chemical Compositions

SN 224,179. Drew Chemical Corporation, New York, N.Y. Filed July 26, 1965.

DRU-DRY

For Rinse Additives for Automatic Dishwashing Machines (Int. Cl. 3).
First use at least as early as May 3, 1960.

SN 270,508. Occidental Petroleum Corporation, Los Angeles, Calif. Filed May 2, 1967.

OXY

For Ammonium Sulphate (Int. Cl. 1).
First use in or about April 1965.

SN 277,715. Billy H. Sellers, Metairie, La. Filed Aug. 7, 1967.

FLO MO

For Emulsifiers for Agricultural Pesticides and Herbicides (Int. Cl. 1).
First use July 31, 1964.

SN 277,970. Amicon Corporation, Lexington, Mass. Filed Aug. 10, 1967.

URESOLVE

For Industrial Solvent Compositions (Int. Cl. 1).
First use May 16, 1966.

SN 278,339. Wisconsin Ice & Coal Co., Milwaukee, Wis. Filed Aug. 15, 1967.

LIFE

For Preparations To Control Crabgrass Seed Germination and To Kill Weeds (Int. Cl. 5).
First use May 25, 1967.

SN 278,864. Basic Incorporated, Cleveland, Ohio. Filed Aug. 23, 1967.

LIQUISPERS

Owner of Reg. No. 761,831.
For Dispersions of Finely Sized Solids in Liquids for Use in the Compounding of Rubber Products, Vinyl Plastisols, Paints, and Similar Plastic Compounds (Int. Cl. 1).
First use July 20, 1967.

SN 279,761. Ventron Corporation, Beverly, Mass. Filed Sept. 6, 1967.

VEN-FIX

For Fixing and Developing Agents for Use in Dyeing Textiles (Int. Cl. 2).
First use Aug. 11, 1967.

SN 280,594. International Dioxcide, Inc., New York, N.Y. Filed Sept. 18, 1967.

One Squirt

For Chemical Deodorant for Industrial, Commercial, and Household Use (Int. Cl. 5).
First use Sept. 14, 1967.

SN 280,884. C. J. Patterson Company, d.b.a. Patco Products, Kansas City, Mo. Filed Sept. 21, 1967.

EMPLEX

For Sodium Stearoyl 2-Lactylate (Int. Cl. 1).
First use Sept. 7, 1967.

SN 295,287. International Dioxcide, Inc., New York, N.Y. Filed Apr. 10, 1968.

OXYCHLORODENE

For Chemical Deodorant for Household, Industrial, and General Use (Int. Cl. 5).
First use Mar. 28, 1968.

SN 295,484. Fritzsche Brothers, Inc., New York, N.Y. Filed Apr. 12, 1968.

LAVOL

For Aromatic Chemical Used in Perfumery, for Manufacturing Purposes Only (Int. Cl. 1).
First use in or about April 1956.

Class 9 — Explosives, Firearms, Equipments, and Projectiles

SN 276,736. Harriette D. Collette, d.b.a. Harriette Crafts, Helena, Ark. Filed July 25, 1967.

MATCH SANDWICH

The word "Match" and the representation of the matches are disclaimed apart from the mark as shown.
For Match Boxes and 2, 3 or 4 Match Boxes in a Commercial Match-Box Package Containing Matches (Int. Cl. 34).
First use May 1967.

SN 279,193. J. B. Holden Company, Livonia, Mich. Filed Aug. 28, 1967.

IRONSIGHTER

For Telescopic Sight Mount for Rifles (Int. Cl. 13).
First use on or about June 13, 1967.

Class 10 — Fertilizers

SN 270,505. Occidental Petroleum Corporation, Los Angeles, Calif. Filed May 2, 1967.

OXY

For Fertilizers (Int. Cl. 1).
First use in or about April 1965.

SN 270,506. Occidental Petroleum Corporation, Los Angeles, Calif. Filed May 2, 1967.

OXY

For Fertilizers (Int. Cl. 1).
First use in or about April 1965.

SN 274,301. Berry Best Egg Company, Inc., Rockport, Ind. Filed June 20, 1967.

hendu

For Organic Plant Food (Int. Cl. 1).
First use May 2, 1967.

trial, Commercial, and Residential Buildings (Int. Cl. 19).
First use Dec. 3, 1963.

SN 278,338. Wisconsin Ice & Coal Co., Milwaukee, Wis. Filed Aug. 15, 1967.

LIFE

Owner of Reg. No. 726,877.
For Turf Food, Evergreen and Tree Food, Rose Food, and Flower and Garden Food (Int. Cl. 1).
First use Apr. 1, 1967.

SN 285,133. A. H. Hoffman, Inc., Landisville, Pa. Filed Nov. 17, 1967.

FERTILMIX

For Potting Mixture With Fertilizer for Seeds, Slips and Plants (Int. Cl. 1).
First use September 1965.

Class 12 — Construction Materials

SN 264,318. G.K.N. Reinforcements Limited, Smethwick, England. Filed Feb. 9, 1967.

WIREWELD

For Welded Steel Wire Mesh for Reinforcing Concrete (Int. Cl. 6).
First use May 1953; in commerce May 1953.

SN 267,039. Walter E. Hanson, d.b.a. United Creto Co., El Paso, Tex. Filed Mar. 17, 1967.

creto

For Liquid Preservative for Use on Concrete Surfaces (Int. Cl. 1).
First use on or about July 1, 1958.

SN 267,978. Remington Arms Company, Inc., Bridgeport, Conn. Filed Mar. 30, 1967.

TAPER-TITE

For Self-Fastening, Expanding Masonry Anchors and Fasteners for Securing Articles to Brick, Concrete, or Other Masonry Material (Int. Cl. 6).
First use Nov. 1, 1966.

SN 269,876. Ethyl Corporation, Richmond, Va. Filed Apr. 24, 1967.

ETHYL

Owner of Reg. Nos. 187,410, 399,427, and others.
For Polyethylene and Polyvinyl Chloride Film for Use as a Vapor Barrier and for Protection Against Weather, and Polyvinyl Chloride Panels for Use in the Construction of Indus-

SN 273,580. Air-Space, Inc., Worcester, Mass. Filed June 12, 1967.

AIR-SPACE, INC.

The expression "Air-Space, Inc." is disclaimed apart from the mark as shown.
For Insulating Glass Units (Int. Cl. 19).
First use June 5, 1967.

SN 278,155. Niedermeyer-Martin Company, Portland, Oreg. Filed Aug. 14, 1967.

FYR-GARD

For Lumber Which Has Been Treated With Fire-Retardant and Preservative Preparations (Int. Cl. 19).
First use Jan. 1, 1960.

SN 278,157. Niedermeyer-Martin Company, Portland, Oreg. Filed Aug. 14, 1967.

LYF-GARD

For Lumber That Has Been Treated With a Preservative Preparation (Int. Cl. 19).
First use Jan. 1, 1963.

SN 278,892. Hooker Chemical Corporation, Niagara Falls, N.Y. Filed Aug. 23, 1967.

HOOKER

Owner of Reg. Nos. 794,467, 798,277, and 807,114.
For Semi-Liquid Asphalt-Based Roof Coating (Int. Cl. 19).
First use at least as early as Mar. 2, 1964.

SN 283,434. Eagle-Picher Industries, Inc., Cincinnati, Ohio. Filed Oct. 26, 1967.

MTB

For Insulation in Block Form for Use in Equipment Operating at High Temperatures—Namely, Annealing Furnaces, Boiler Walls, Heat Treating Furnaces, and the Like (Int. Cl. 17).
First use Dec. 5, 1964.

SN 283,923. Pecora Chemical Corporation, Philadelphia, Pa. Filed Nov. 1, 1967.

For Sealants for Use in Building Construction (Int. Cl. 17).
First use May 11, 1967.

SN 291,146. Flangeklamp Corporation, Buffalo, N.Y. Filed Feb. 15, 1968.

For Parts for Supporting Grid Systems for Suspended Ceilings (Int. Cl. 19).
First use on or about June 5, 1967.

SN 291,510. Hendon Construction Company, Little Ferry, N.J. Filed Feb. 20, 1968.

HENDON

Owner of Reg. No. 843,527.
For Prefabricated Swimming Pools (Int. Cl. 19).
First use Nov. 13, 1967.

SN 291,983. H & D, Inc., Everett, Wash. Filed Feb. 27, 1968.

TRI-LINE

For Aluminum Windows (Int. Cl. 6).
First use Jan. 10, 1961.

SN 292,106. The Johnson Rubber Company, Middlefield, Ohio. Filed Feb. 28, 1968.

READY-COVE

For Floor Accessories—Namely, Vinyl and Rubber Base Moldings (Int. Cl. 27).
First use on or before Feb. 13, 1968.

SN 293,170. The Perma-Door Company, Cincinnati, Ohio. Filed Mar. 13, 1968.

PERMA-DOOR

For Residential Steel Doors, Door Frames, and Parts of Said Frames—Namely, Thresholds, Astragals, Mouldings and Trim (Int. Cl. 6).
First use Feb. 22, 1968.

Class 13 — Hardware and Plumbing and Steam-Fitting Supplies

SN 276,261. The F. C. Thornton Co., Cleveland, Ohio. Filed July 18, 1967.

THORNTON PAY-LEVER

For Drum Closing Rings and Locks for Containers (Int. Cl. 6).
First use July 3, 1967.

SN 276,947. Northeast Engineering, Inc., Hamden, Conn. Filed July 27, 1967.

FLUIDAMP

For Fluid Flow Control Device Including Diaphragm Actuated Members, Valves, and the Like (Int. Cl. 6).
First use Jan. 18, 1967.

SN 279,397. Johnson Enterprises, Inc., Rockford, Ill. Filed Aug. 30, 1967.

JETS-TAP

For Taps for Beer Barrels (Int. Cl. 11).
First use July 8, 1967.

SN 279,492. Pentapco, Inc., d.b.a. Penn Products Co., Elizabeth, N.J. Filed Aug. 31, 1967.

Fashion Mode

Owner of Reg. Nos. 780,651 and 811,073.
For Slide Fasteners (Int. Cl. 26).
First use Mar. 4, 1966.

SN 280,275. Symmons Engineering Company, Boston, Mass. Filed Sept. 13, 1967.

TEMPTROL

For Hot and Cold Water Mixing Valves (Int. Cl. 6).
First use in or about August 1957.

SN 283,551. Phillips Petroleum Company, Bartlesville, Okla. Filed Oct. 27, 1967.

ULTRA-LINE

For Plastic Pipe (Int. Cl. 17).
First use at least as early as Nov. 18, 1963.

SN 283,552. Phillips Petroleum Company, Bartlesville, Okla. Filed Oct. 27, 1967.

HI-LINE

For Plastic Pipe (Int. Cl. 17).
First use at least as early as Nov. 11, 1963.

SN 283,553. Phillips Petroleum Company, Bartlesville, Okla. Filed Oct. 27, 1967.

KEY LINE

For Plastic Pipe (Int. Cl. 17).
First use at least as early as Nov. 8, 1963.

SN 283,554. Phillips Petroleum Company, Bartlesville, Okla. Filed Oct. 27, 1967.

MAIN-LINE

For Plastic Pipe (Int. Cl. 17).
First use at least as early as Nov. 5, 1963.

SN 283,555. Phillips Petroleum Company, Bartlesville, Okla. Filed Oct. 27, 1967.

MINE-LINE

For Plastic Pipe (Int. Cl. 17).
First use at least as early as Mar. 4, 1964.

SN 283,556. Phillips Petroleum Company, Bartlesville, Okla. Filed Oct. 27, 1967.

MODERN LINE

For Plastic Pipe (Int. Cl. 17).
First use at least as early as Nov. 18, 1963.

SN 283,557. Phillips Petroleum Company, Bartlesville, Okla. Filed Oct. 27, 1967.

S-LINE

For Plastic Pipe (Int. Cl. 17).
First use at least as early as Nov. 26, 1963.

SN 283,558. Phillips Petroleum Company, Bartlesville, Okla. Filed Oct. 27, 1967.

THRIFT-LINE

For Plastic Pipe (Int. Cl. 17).
First use at least as early as Nov. 19, 1963.

Class 14 — Metals and Metal Castings and Forgings

SN 245,476. Hamilton Watch Company, Lancaster, Pa. Filed May 12, 1966.

HAMILTON PRECISION METALS LANCASTER, PENNA.

No claim is made to the words "Lancaster, Penna." apart from the mark as shown. Owner of Reg. No. 672,384.
For Special Metal Alloys (Int. Cl. 6).
First use Feb. 28, 1966.

SN 291,525. Rexall Drug and Chemical Company, Los Angeles, Calif. Filed Feb. 20, 1968.

FILAMETS

For Metal Fibers (Int. Cl. 6).
First use Jan. 12, 1968.

SN 292,585. The Kroger Co., Cincinnati, Ohio. Filed Mar. 6, 1968.

HOME PRIDE

For Aluminum Household Foil (Int. Cl. 6).
First use at least as early as Dec. 16, 1965.

Class 16 — Protective and Decorative Coatings

SN 264,841. National Automotive Parts Association, Chicago, Ill. Filed Feb. 16, 1967. COLLECTIVE MARK.

NAPA

For Automobile Coatings—Namely, Paints, Varnishes, Lacquers, Enamels; Paint Thinners and Reducers, and Paint Primers (Int. Cl. 2).
First use Nov. 17, 1965.

SN 290,450. Minnesota Mining and Manufacturing Company, St. Paul, Minn. Filed Feb. 7, 1968.

3M

Owner of Reg. Nos. 610,263, 839,874, and others.
For Adherent Coating Compositions for Application to Various Surfaces (Int. Cl. 2).
First use Dec. 30, 1966.

SN 293,091. Minnesota Mining and Manufacturing Company, St. Paul, Minn. Filed Mar. 13, 1968.

The drawing is lined for the color green.
For Resilient Coating Designed for Protection of Metal Against Corrosion and Abrasion and Which May Be Used for Thermal and Acoustical Insulation (Int. Cl. 2).
First use Mar. 1, 1967.

Class 18 — Medicines and Pharmaceutical Preparations

SN 268,628. Takeda Chemical Industries, Ltd., Higashi-ku, Osaka, Japan. Filed Apr. 7, 1967.

ACTONATE

Owner of Japanese Reg. No. 658,298, dated Nov. 17, 1964.
For Pharmaceutical Preparation for Use in the Treatment and Prevention of Coccidiosis in Poultry.

SN 270,884. Bristol-Myers Company, New York, N.Y. Filed May 8, 1967.

A.M.

For Analgesic (Int. Cl. 5).
First use Jan. 6, 1967.

SN 272,530. Stonewall Witcher, Robbins, Ill. Filed May 26, 1967.

MORE LIFE

For Medicinal Preparation for the Temporary Relief of Arthritis (Int. Cl. 5).
First use Apr. 18, 1967.

SN 273,456. Allergan Pharmaceuticals, Santa Ana, Calif. Filed June 9, 1967.

HMS

Owner of Reg. No. 414,763.
For Ophthalmic Preparations (Int. Cl. 5).
First use Feb. 6, 1967.

SN 274,224. Medicinal Research Laboratories, Inc., Philadelphia, Pa. Filed June 19, 1967.

MAGCINE

For Pharmaceutical Antacid Preparation for the Relief of Gastric Hyperacidity and Gastric Distress (Int. Cl. 5).
First use July 1964.

SN 274,427. Max J. Gruhin, d.b.a. Ro-Fay Products, Carteret, N.J. Filed June 21, 1967.

Ro-BURN

For Lotion for Burns and Sunburns (Int. Cl. 5).
First use on or about June 2, 1937.

SN 276,542. Dartell Laboratories, Inc., d.b.a. Dartell Laboratories, Los Angeles, Calif. Filed July 21, 1967.

ELIXAMIN-B

Owner of Reg. No. 780,548.
For Nutritional Supplement and/or Therapeutic Agent Supplying Vitamins and Minerals in a Non-Alcoholic Elixir (Int. Cl. 5).
First use in or about March 1953.

SN 277,468. Mission Pharmacal Company, San Antonio, Tex. Filed Aug. 3, 1967.

LIQUITAB

Owner of Reg. No. 820,621.
For Pharmaceutical Preparations in Chewable Tablet Dosage Form—Namely, Antispasmodic, Anticholinergic, Antacid, Antihistamine, Antibiotic, Antiasthmatic and Antinausea (Int. Cl. 5).
First use Mar. 18, 1964.

SN 280,438. Madison Chemical Corporation, Maywood, Ill. Filed Sept. 15, 1967.

MAIN EVENT!

For Spray Composition for Preventing Sores, Blisters, and Chafing on Skin (Int. Cl. 5).
First use Mar. 23, 1964.

SN 281,765. CMC, Inc., Nashville, Tenn. Filed Oct. 4, 1967.

CuMedCo

For Rubbing Alcohol (Int. Cl. 5).
First use Nov. 1, 1966.

SN 281,841. L. T. York Company, d.b.a. Medi-Kay Pharmacal Co., Brookfield, Mo. Filed Oct. 4, 1967.

MEDI-SWAB

Owner of Reg. Nos. 356,346, 795,689, and others.
For Rubbing Alcohol (Int. Cl. 5).
First use Sept. 28, 1967.

SN 281,843. L. T. York Company, d.b.a. Medi-Kay Pharmacal Co., Brookfield, Mo. Filed Oct. 4, 1967.

MEDI-SEPTIC

Owner of Reg. Nos. 356,346, 795,689, and others.
For Rubbing Alcohol (Int. Cl. 5).
First use Sept. 28, 1967.

SN 282,264. Bristol-Myers Company, New York, N.Y. Filed Oct. 11, 1967.

AM-O-LOZ

For Cough and Cold Medication (Int. Cl. 5).
First use at least as early as 1908.

SN 282,817. The Purdue Frederick Company, Yonkers, N.Y. Filed Oct. 18, 1967.

QUINPLEXIN

Owner of Reg. No. 644,653.
For Cardiovascular Preparation (Int. Cl. 5).
First use May 25, 1967.

SN 294,362. Warner-Lambert Research Institute, Morris Plains, N.J. Filed Mar. 28, 1968.

PLESTROVIS

For Estrogenic Hormone (Int. Cl. 5).
First use Mar. 18, 1968.

SN 296,746. Parke, Davis & Company, Detroit, Mich. Filed Apr. 29, 1968.

DILANTIN-125

Owner of Reg. No. 359,292.
For Anticonvulsant Preparation (Int. Cl. 5).
First use on or before Apr. 1, 1968.

SN 296,750. E. R. Squibb & Sons, Inc., New York, N.Y. Filed Apr. 29, 1968.

VEETIDS

For Antibiotic Preparation (Int. Cl. 5).
First use Apr. 2, 1968.

SN 296,751. E. R. Squibb & Sons, Inc., New York, N.Y. Filed Apr. 29, 1968.

V-TIDS

For Antibiotic Preparation (Int. Cl. 5).
First use Mar. 14, 1968.

Class 19—Vehicles

SN 196,970. Keystone Railway Equipment Company, Chicago, Ill. Filed July 2, 1964.

KEYSTONE SHOCK CONTROL

Owner of Reg. Nos. 674,881 and 753,987.
For Units Used in the Construction of Underframes of Railway Freight Cars To Absorb and Lessen the Forces of Collision—Namely, Spring Assemblies, Spring Anchors, Hydraulic Cylinders, Stationary and Floating Sills, Sill Guides, Tie Plates, Bolsters, Pistons and Piston Stop Assemblies (Int. Cl. 12).
First use Oct. 15, 1959.

SN 275,547. The Murray Ohio Manufacturing Co., Nashville, Tenn. Filed July 7, 1967.

ELIMINATOR

For Bicycles (Int. Cl. 12).
First use Nov. 4, 1966.

SN 280,434. Lubbock Manufacturing Company, Lubbock, Tex. Filed Sept. 15, 1967.

LUBBOCK

For Tank Trailers for Petroleum Products (Int. Cl. 12).
First use June 15, 1937.

SN 281,069. Go-Tract Limited, Les Cedres, Quebec, Canada. Filed Sept. 25, 1967.

GO-TRACT

For General Purpose Tracked Vehicles (Int. Cl. 12).
First use Mar. 26, 1966; in commerce May 24, 1967.

SN 288,387. Thompson Boat Company of New York, Inc., Cortland, N.Y. Filed Jan. 8, 1968.

LANCER

For Boats (Int. Cl. 12).
First use December 1954.

SN 288,426. The Commodore Corporation, Omaha, Nebr. Filed Jan. 9, 1968.

SAFEWAY

For Mobile Homes and House Trailers (Int. Cl. 12).
First use on or about Jan. 1, 1963.

SN 288,551. Starcraft Corporation, Goshen, Ind. Filed Jan. 10, 1968.

STARCRAFT

Owner of Reg. Nos. 761,578, 795,067, and 801,235.
For Travel Trailers (Int. Cl. 12).
First use Oct. 6, 1967.

SN 288,803. Fullview Mirror Company, San Francisco, Calif. Filed Jan. 15, 1968.

WINK

For Vehicle Mirrors (Int. Cl. 12).
First use Apr. 25, 1967.
Subj. to Intf. with SN 290,655.

SN 289,093. Ghia S.p.A., Turin, Italy. Filed Jan. 18, 1968. Owner of U.S. Reg. No. 831,735.

GHIA

For Automobile Bodies and Automobiles (Int. Cl. 12).
First use May 1, 1930; in commerce June 1, 1949.

SN 289,202. Maschinenfabrik Augsburg-Nüruberg A.G., Munich, Germany. Filed Jan. 19, 1968.

MAN

Owner of German Reg. No. 100,783, dated Sept. 13, 1907; and U.S. Reg. No. 782,721, 804,192, and others.
For Trucks and Buses (Int. Cl. 12).

SN 289,226. White Motor Corporation, Cleveland, Ohio. Filed Jan. 19, 1968.

XRL

For Trucks, Highway Tractors, and Parts Therefor (Int. Cl. 12).
First use on or about Oct. 15, 1967.

SN 289,364. Wheel Camper Corporation, Centreville, Mich. Filed Jan. 22, 1968.

SPACEWAGON

For Camping Trailers (Int. Cl. 12).
First use Oct. 13, 1967.

SN 289,993. Kit Manufacturing Company, Long Beach, Calif. Filed Jan. 31, 1968.

SPORTSMASTER

For Trailer Coaches, Travel Trailers, and Mobile Homes (Int. Cl. 12).
First use Oct. 31, 1967.

SN 290,655. Roy Winkelmann Racing of America, Inc., South El Monte, Calif. Filed Feb. 8, 1968.

WINK

For Rear Vision Mirrors for Vehicles (Int. Cl. 12).
First use about December 1966.
Subj. to Intf. with SN 288,803.

SN 296,473. Troutman-Barnes, Culver City, Calif. Filed Apr. 24, 1968.

MOJAVE

For Motorcycles (Int. Cl. 12).
First use Mar. 1, 1968.

Class 21—Electrical Apparatus, Machines, and Supplies

SN 263,705. Spectrol Electronics Corporation, City of Industry, Calif. Filed Jan. 31, 1967.

SPECTROL

For Variable Resistors—Namely, Precision Potentiometers, Trimming Potentiometers, and Sector Potentiometers; Rotary Switches; Turns Counting Dials; and Combinations of the Foregoing (Int. Cl. 9).
First use in or about February 1954.

SN 264,844. National Automotive Parts Association, Chicago, Ill. Filed Feb. 16, 1967. COLLECTIVE MARK.

NAPA

For Automotive Electrical Parts—Namely, Armatures, Storage Batteries, Circuit Breakers, Bulbs, Bushings, Cables, Clamps, Cleats, Clips, Coils, Connectors, Cords, Distributors and Distributor Parts, Fuses, Fuse Blocks, Fuse Holders, Flashers and Controls Therefor, Generators, Ignition Parts, Lights, Spark Plugs, Voltage Regulators, Relays, Starters, Switches, Terminals, Tips, Wires, Turn Signals and Controls Therefor, Including Spare, Replacement, and Repair Parts (Int. Cls. 9, 11, and 12).
First use April 1965.

SN 267,965. Motorola, Inc., Franklin Park, Ill. Filed Mar. 30, 1967.

VIBRASONIC

For Electronic Sound Reproducing System, Comprising an Acoustical Revergerator, Amplifier, Speakers, and Associated Circuitry Which Gives Reverberation Effects (Int. Cl. 9).
First use June 1960.

SN 268,963. Lear Siegler, Inc., Paramus, N.J. Filed Apr. 12, 1967.

BOGEN

Owner of Reg. Nos. 429,747, 643,536, and others.
For Electronic Sound Reproducing Equipment—Namely, Amplifiers, Preamplifiers, Public Address Systems, Speakers, Microphones, High Fidelity Tuners and Amplifiers, Paging Equipment, Transcription Players, and Loudspeaking and Telephone Intercommunication Systems (Int. Cl. 9).
First use Sept. 1, 1933.

SN 269,735. "Automatic" Sprinkler Corporation of America, Cleveland, Ohio. Filed Apr. 21, 1967.

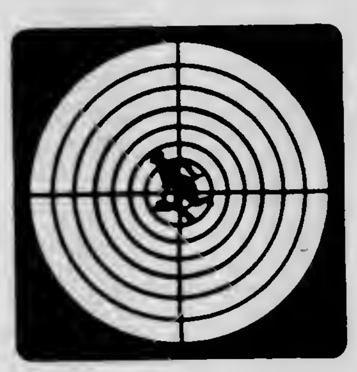

For Electronic Audio Alarm Systems (Int. Cl. 9).
First use at least as early as Dec. 30, 1965.

SN 273,638. The Dexter Corporation, Windsor Locks, Conn., by merger from Hysol Corporation, Olean, N.Y. Filed June 12, 1967.

MHOBOND

The term "Mho" is disclaimed apart from the mark as shown.
For Conductive Metal Filled Epoxy Adhesive for Cathodic Protection in Pipeline Transmission and Distribution Industries (Int. Cl. 1).
First use Apr. 23, 1967.

SN 274,410. Centro de Estudios Tecnos de Materiales Especiales Ini-Cetme, Madrid, Spain. Filed June 21, 1967.

CETME

Owner of Spanish Reg. No. 509,235, dated July 13, 1966.
For Electric Storage Batteries (Int. Cl. 9).

SN 274,513. Irvin Gassenheimer and Irvin Gassenheimer, Jr. (joint owners), Montgomery, Ala. Filed June 22, 1967.

TELEMEDIC

The drawing is lined for the colors blue and silver, but color is not claimed as an integral part of the mark.
For Audio Call Systems for Medical Personnel in Hospitals and Nursing Care Centers (Int. Cl. 9).
First use May 19, 1967.

SN 276,097. Richard D. Brew & Company, Inc., Concord, N.H. Filed July 17, 1967.

BREWEAVE

Owner of Reg. No. 813,455.
For Electric Heating Elements Used in Vacuum Furnaces (Int. Cl. 11).
First use June 14, 1967.

SN 277,716. Setchell-Carlson, Inc., St. Paul, Minn. Filed Aug. 7, 1967.

Captured Color

Applicant disclaims the word "Color" apart from the mark without disclaiming any common law rights that applicant may have acquired in the word.
For Color Television Sets (Int. Cl. 9).
First use May 11, 1967.

SN 278,805. Lo Duca Bros. Musical Instruments, Inc., Milwaukee, Wis. Filed Aug. 22, 1967.

WORLD WIDE ELECTRONICS

Applicant disclaims the word "Electronics" apart from the mark as shown.
For Amplifiers (Int. Cl. 9).
First use Oct. 6, 1966.

SN 279,051. Fred H. Cole, d.b.a. Cole Instrument, Costa Mesa, Calif. Filed Aug. 25, 1967.

MARK C

For Precision Switches (Int. Cl. 9).
First use June 8, 1966.

SN 280,068. Kerrigan Lewis Manufacturing Co., Chicago, Ill. Filed Sept. 11, 1967.

NYL-CEL

For Insulated Electric Wire (Int. Cl. 9).
First use Apr. 28, 1949.

SN 280,305. Espey Mfg. & Electronics Corp., Saratoga Springs, N.Y. Filed Sept. 14, 1967.

HELI-NOTCH

For Electronic Filters (Int. Cl. 9).
First use Aug. 12, 1966.

SN 281,963. Carol Wire & Cable Corp., Pawtucket, R.I. Filed Oct. 6, 1967.

POCKET-PAK

For Spools Containing Electric Wire or Cable (Int. Cl. 9).
First use in or about December 1962.

SN 282,214. Sarex Corporation, Carteret, N.J. Filed Oct. 10, 1967.

MINI-COOL

For Housing Enclosure or Chassis Box for Instruments, Such as Electronic Instruments, Electrical Devices, Cable Junctions, and Transistor Circuitry, Which Come in an Unassembled Form and Are Adaptable for Simple Assembly by the User (Int. Cl. 9).
First use Aug. 15, 1967.

SN 288,100. Korry Manufacturing Co., Seattle, Wash. Filed Jan. 4, 1968.

KORRY

For Illuminated Indicators—Namely, Press-To-Test Indicators, Fixed Indicators, Switch Operation Indicators, Flush-Mounted Panel Indicators, Edge Light Indicators and Multiple Panel Indicators; Illuminated Interlocking Keyboards, Iluminated Switches and Panel Assemblies of and Parts and Components for All Such Indicators, Keyboards and Switches, and Tube Lamp Sockets (Int. Cl. 9).
First use in or about 1938 on press-to-test and fixed indicators.

SN 291,565. Vioka, Incorporated, Hoboken, N.J. Filed Feb. 21, 1968.

VIKOAX

For Coaxial Cable (Int. Cl. 9).
First use June 1966.

SN 292,652. Amco Engineering Company, Chicago, Ill. Filed Mar. 7, 1968.

AMCO

Owner of Reg. Nos. 736,021 and 745,089.
For Telegraph Keys, Miniature Radio Transmitters, Electrical Control Boxes for Track Vehicles, Electric Motor Driven Blowers for Electronic Housings, Power Supply Circuit Assemblies, Dielectric Insulators, and Wave Guides, and Parts Thereof (Int. Cl. 9).
First use as early as Jan. 1, 1944.

Class 22 — Games, Toys, and Sporting Goods

SN 244,755. Pittman Products, Inc., d.b.a. Pittman Rubber Co., Huntington Park, Calif., assignee, by mesne assignment, of Sportsways, Inc., Paramount, Calif. Filed May 2, 1966.

NAVY UNIT II

For Regulators and Combined Regulators and Pressure Gauges for Underwater Diving Equipment (Int. Cl. 9).
First use Feb. 20, 1961.

SN 254,341. Vereinigte Baubeschlaofabriken Gretsch & Co. GmbH, Leonberg, near Stuttgart, Germany. Filed Sept. 12, 1966.

GEZE-Step

Priority claimed under Sec. 44(d) on German application filed Mar. 19, 1966; Reg. No. 820,725, dated June 16, 1966. Owner of U.S. Reg. No. 786,673.
For Hardware for Sporting Goods—Namely, Mountings and Fittings for Sporting Equipment, Namely, Ski-Bindings, in Particular Heel-Holding Devices and Heel Automatic; Boot Straightener Devices Made of Metal, in Particular Ski-Boot Straightener Devices (Int. Cl. 28).

SN 256,368. National Periodical Publications, Inc., New York, N.Y. Filed Oct. 13, 1966.

BATMAN

Owner of Reg. Nos. 378,913, 804,709, 839,561, and others.
For Scale Model Hobby Kits, Roller Skates, Putty Printing Toys, Stick-On Activity Sets, Stuffed Plush Toys, Dart Launchers, Corrugated Board Crawl-In Caves, Toy Riders, Flying Toys, Banks, Jig Saw Puzzles, Boxed Activity Sets, String-Wound Action Walking Toys, Flexible Plastic Figure Toys, Animated Action Picture Toys, Miniature String Figures, Rub-On Transfers, Utility Belts With Accessories, Children's Tableware Settings, Paint Sets, Movie Projector Guns, Riding Toys, Toy Guns, Rope-Thrower Toys, Exploding Bombs, Battery Operated Cars, Die-Cast Metal Cars, Equipment or Apparatus Sold as a Unit for Playing Board Games, Card and Puzzle-Type Games, Animated Three Dimensional Toy Paper Figures, Inflatable Bop Bags, Rubber Balls, Balloons, Squeeze Toys, Water Guns, Periscopes, Launcher Guns, Motorized Flying Airplanes, Helicopters, Action Dashboards, Magnetic Build-Up Sets, Toy Grenades, Bubble Pipes, Scooters, Balancing Boards, String Tops, Toy Watches; Movable Toys—Namely, Spring Mounted Popout Eyes; and Toy Playing Cards (Int. Cl. 28).
First use February 1966.

SN 278,416. Professional Tape Co., Inc., d.b.a. Time Products Company, Riverside, Ill. Filed Aug. 16, 1967.

TIME

Owner of Reg. No. 642,176.
For Self-Sticking Target Patches (Int. Cl. 28).
First use on or about May 22, 1966.

SN 287,322. Shakespeare Company, Kalamazoo, Mich. Filed Dec. 20, 1967.

noris Shakespeare

The name "Noris Shakespeare" is a coined fictitious name.
Owner of Reg. Nos. 359,879, 832,861, and others.
For Sporting Goods—Namely, Fishing Reels (Int. Cl. 28).
First use August 1964.

SN 288,702. Learning Research Corporation, Inc., Oak Lawn, Ill. Filed Jan. 12, 1968.

COLOR AND CLEAR

For Drawing Board for Educational and Amusement Purposes (Int. Cl. 28).
First use November 1967.

SN 289,499. Gentex Corporation, New York, N.Y. Filed Jan. 24, 1968.

COMFORT-KING

For Life Jackets (Int. Cl. 9).
First use Nov. 23, 1965.

SN 289,500. Gentex Corporation, New York, N.Y. Filed Jan. 24, 1968.

AQUA-SKEE

For Life Jackets (Int. Cl. 9).
First use Apr. 9, 1964.

SN 290,336. Selchow & Righter Company, Bayshore, N.Y. Filed Feb. 5, 1968.

WHAT SHALL I BE?

For Equipment and Accessories for Playing a Board Game (Int. Cl. 28).
First use Feb. 28, 1966.

SN 290,576. British Aircraft Corporation (Operating) Limited, Bristol, England. Filed Feb. 8, 1968.

CONCORDE

For Kits for Making Model Airplanes (Int. Cl. 28).
First use Nov. 26, 1966; in commerce Sept. 28, 1967.

SN 290,665. Transogram Company, Inc., New York, N.Y. Filed Feb. 8, 1968.

TAK-A-PEG

For Console and Seat With Letters and Numbers, Blackboard, and Peg and Mallet (Int. Cl. 28).
First use about July 27, 1933.

SN 290,840. Alfred M. George, Jr., d.b.a. AMH Industries, Santa Ana, Calif. Filed Feb. 12, 1968.

HOOKSETTER

For Fish Rod Holders (Int. Cl. 28).
First use Jan. 6, 1968.

SN 290,841. Funway Inc., Kansas City, Mo. Filed Feb. 12, 1968.

WHIRL-A-WHEEL

For Child's Riding Toy (Int. Cl. 28).
First use Dec. 15, 1967.

SN 291,331. Mattel, Inc., Hawthorne, Calif. Filed Feb. 19, 1968.

STRANGE CHANGE

For Toy Kit Comprising Plastic Materials for Making Toy Figures, a Mold-Type Heating Element To Form Toy Figures, and a Device for Compressing the Toy Figures Into the Original Shape of the Plastic Material (Int. Cl. 28).
First use Nov. 2, 1967.

SN 291,489. Boone Bait Company, Inc., Winter Park, Fla. Filed Feb. 20, 1968.

ARROW-LOCK

For Fish Hooks (Int. Cl. 28).
First use Jan. 8, 1968.

SN 297,006. Donco Products Corp., Lakeview, Oreg. Filed May 1, 1968.

For Exercise Board (Int. Cl. 28).
First use Feb. 26, 1968.

Class 23—Cutlery, Machinery, and Tools, and Parts Thereof

SN 247,231. Industrial Specialties Corporation, Fort Worth, Tex. Filed June 3, 1966.

SAFE-T-GRIP

For Double Faced Industrial Hammers of the Type Having Soft Detachable Striking Faces, and Parts Therefor (Int. Cl. 8).
First use Jan. 1, 1956.

SN 259,869. A. C. Weber Co., Inc., Chicago, Ill. Filed Dec. 1, 1966.

DIAL-A-STITCH

For Variable Pattern Controls on Household Sewing Machines (Int. Cl. 7).
First use June 1, 1951.

SN 260,688. United Aircraft Corporation, East Hartford, Conn. Filed Dec. 13, 1966.

THERMAL SKIN

For Internal Combustion Engines and Engine Parts Cooled by a Heat Exchanging Means (Int. Cl. 7).
First use Oct. 3, 1966.

SN 262,414. Elpo Industries Inc., Fair Lawn, N.J. Filed Jan. 12, 1967.

For Spaghetti Tongs, Beaters, Ice Cream Scoops, Cheese Cutters, Ice Cube Crushers, Nut Crackers, Knives of Base Metal, Spoons of Base Metal, Can Openers, Hamburger Presses, Egg Slicers, Egg Separators, Spatulas, Meat Tenderizers, Kitchen Shears, Basters, Kitchen Tongs, Carving Aids, Pastry Blenders, Vegetable Peelers, and Jar Wrenches (Int. Cl. 8).
First use Oct. 8, 1965.

SN 263,698. Royal Industries, Inc., Pasadena, Calif. Filed Jan. 31, 1967.

MOBILCRETE

For Concrete Pumps, and in Particular, Concrete Pumps Mounted on Motor Vehicles (Int. Cl. 7).
First use at least as early as Jan. 13, 1967.

SN 263,918. Imperial Knife Associated Companies, Inc., Providence, R.I. Filed Feb. 3, 1967.

MADRAS

For Stainless Steel Knives, Forks, and Spoons (Int. Cl. 8).
First use Jan. 3, 1967.

SN 264,311. Eaton Yale & Towne Inc., Cleveland, Ohio. Filed Feb. 9, 1967.

FC1

For Electric Hoists and Parts and Controls Therefor (Int. Cl. 7).
First use Oct. 19, 1966.

SN 264,396. Dyna-Jet Products, Inc., Shawnee Mission, Kans. Filed Feb. 10, 1967.

DYNA-JET

For High Pressure Cleaning Equipment (Int. Cl. 7).
First use Dec. 15, 1966.

SN 264,877. Jamesway Co. Limited, Preston, Ontario, Canada. Filed Jan. 11, 1967.

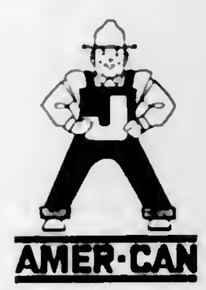

The lining on the drawing is for shading and does not represent color.
For Barn and Farm Equipment—Namely, Silo Unloaders, Milking Machines, and Mechanical Barn Cleaners (Int. Cl. 7).
First use August 1966; in commerce August 1966.

SN 265,397. Bryce Berger Limited, Hucclecote, Gloucester, England. Filed Feb. 24, 1967.

BRYCE

Owner of British Reg. No. 765,539, dated May 14, 1957.
For Fuel Injection Pumps and Parts for Said Pumps (Int. Cl. 7).

SN 267,448. Schenck Corporation, York, Pa. Filed Mar. 23, 1967.

REBAR-MATIC

For Apparatus Incorporating Racks, Conveyors, and Transfer Means for Handling and Conveying Bar Stock to a Shear and/or Conveying Bar Stock From the Shear and Handling the Sheared Bars (Int. Cl. 7).
First use June 1966.

SN 268,260. Winslow Manufacturing Corporation, Hialeah, Fla. Filed Apr. 3, 1967.

PRINCESS

For Spray Systems—Namely, Compressors, and Spray Applicators, Nozzles, and Guns, for Use With Hair Cosmetics and Other Spray Materials (Int. Cl. 7).
First use Jan. 1, 1964.

SN 269,391. The Air-Drolics Company, Middlesex, N.J. Filed Apr. 18, 1967.

Air-Drolics

For Air Tools and Compressors—Namely, Paving Breakers, Clay Spades, Rock Drillers, Tampers, Backfillers, Digging Apparatus, Grinders, Reamers, Impact Wrenches, Nut Setters, Chipping Guns, Rivet Squeezers, Rammers, Core Busters, Drills, of the Air Actuated Design; and Parts Thereof (Int. Cl. 7).
First use Aug. 25, 1966.

SN 272,069. Kelley Company, Inc., Milwaukee, Wis. Filed May 22, 1967.

PANIC STOPS

For Automatic Ramp Locking Mechanism for a Dockboard (Int. Cl. 6).
First use Apr. 15, 1966.

SN 273,512. Mason Edward Morgan, Denver, Colo. Filed June 9, 1967.

DRI-FLO

For Pulverulent Material Conveyors and Pumps (Int. Cl. 7).
First use on or about Oct. 20, 1966.

SN 273,889. Textron, Inc., Providence, R.I., assignee of Gorham Corporation, Providence, R.I. Filed June 14, 1967.

SANDALWOOD

For Stainless Steel Flatware (Int. Cl. 8).
First use May 18, 1967.

SN 274,273. Josef Wagner, d.b.a. Ing. Josef Wagner, Friedrichshafen-Fischbach, Germany. Filed June 19, 1967.

WAGNER

The word "Wagner" is disclaimed except as used with the remainder of the mark.
For Spray Guns (Int. Cl. 7).
First use Oct. 12, 1965; in commerce Oct. 31, 1965.

SN 274,398. Clarence T. Bickner, d.b.a. Kitten Kraft, El Sobrante, Calif. Filed June 21, 1967.

DIAL MASTER

Applicant disclaims the word "Dial" apart from the mark as a whole. Owner of Reg. No. 819,451.
For Apparatus for Use in Making Ornamental Bows, and Component Parts Thereof, Including Bow Pins (Int. Cl. 7).
First use Feb. 10, 1966.

SN 274,654. Powers & Eaton Industries, Inc., Hawthorne, N.J. Filed June 23, 1967.

WHIRLWIND

For Tag Stringing Machines—Namely, Machines for Affixing Wire, String and the Like to Merchandising and Identification Tags (Int. Cl. 7).
First use about June 1958.

SN 274,731. Flinchbaugh Products, Inc., Redco, Pa. Filed June 26, 1967.

Fpi

For Hydraulic Accumulators, Profile Grinding Machines, Power Operated Granulating Machines for Scrap Materials, Injection Molding Machines, and Label Applicators (Int. Cl. 7).
First use Feb. 3, 1966, on injection molding machines.

SN 275,263. Harvey Harvesters, Inc., Grand Haven, Mich. Filed July 3, 1967.

HARVEY HARVESTER

The word "Harvester" is disclaimed apart from the mark as shown.
For Harvesting Machines (Int. Cl. 7).
First use July 1966.

SN 275,292. Parks-Cramer (Great Britain) Ltd., Oldham, England. Filed July 3, 1967.

MAGNAVAC

For Pneumatic Systems for Conveying Material in Textile Mills (Int. Cl. 7).
First use September 1962; in commerce June 19, 1965.

SN 275,966. Tanaka Bussan Company Limited, Cooksville, Ontario, Canada. Filed July 13, 1967.

GAS-O-MISER

Priority claimed under Sec. 44(d) on Canadian application filed May 13, 1967; Reg. No. 155,450, dated Feb. 9, 1968.
For Vacuum Control Valve for Carburetors of Internal Combustion Engines (Int. Cl. 7).
First use Oct. 20, 1966; in commerce Oct. 20, 1966.

SN 279,958. Safeguard Precision Products, Inc., Aberdeen, S. Dak. Filed Sept. 8, 1967.

HUB CITY

For Power Transmission Products—Namely, Gear Boxes, Couplings, Drive Shafts, Adaptors, Cylinder Assemblies, Cylinder Sleeves, Valve Guides, Valve Seats, Small Engine Parts, and Mechanics' Hand Tools in Connection Therewith (Int. Cls. 7 and 8).
First use Apr. 16, 1954.

SN 280,080. Morris-Young-Owens Co., Houston, Tex. Filed Sept. 11, 1967.

PORTA LATHE

Applicant disclaims the word "Lathe" apart from the mark as shown.
For Pipe Beveling Machines (Int. Cl. 7).
First use about Apr. 14, 1967.

SN 280,982. John Strange Paper Company, Menasha, Wis. Filed Sept. 22, 1967.

ULEX

For Papermaking Machine Parts—Namely, Suction Box Covers, Forming Boards, Deflector Strips and Doctor Blades; Ore Chutes for the Mining Industry; and Clicker Pads for the Shoe Industry (Int. Cl. 7).
First use Mar. 18, 1965.

SN 284,257. Werkzeugmaschinenfabrik Oerlikon Bührle & Co., Zurich, Switzerland. Filed Nov. 6, 1967.

FOTOMAT

Owner of Swiss Reg. No. 214,275, dated Nov. 24, 1965.
For Machine Tools—Namely, Turning Lathes, Boring Mills and Cutters, Grinding Machines, and Planing Machines (Int. Cl. 7).

SN 285,558. Kutz-Kwik, Inc., La Grange, Ill. Filed Nov. 24, 1967.

FACE-A-MATIC

For Roller Conveyors and Conveyor Sections (Int. Cl. 7).
First use on or about Sept. 13, 1967.

SN 287,203. K-Line Corporation, Geneva, Ill. Filed Nov. 20, 1967.

For Machine Tools—Namely, Power Saws (Int. Cl. 7).
First use October 1965.

SN 287,398. Conchemco Incorporated, d.b.a. Western Control Company, Kansas City, Mo. Filed Dec. 22, 1967.

WESCON

For Mechanical Control Assemblies and Devices—Namely, Push-Pull Cables and Flexible Conduits for Transmission of Motion, and Parts and Components Thereof (Int. Cl. 7).
First use July 28, 1967.

Class 24 — Laundry Appliances and Machines

SN 297,338. Ametek, Inc., East Moline, Ill. Filed May 6, 1968.

EKON-O-FEEDER

For Laundry Feeding Machine for Smoothing Laundry Articles (Int. Cl. 7).
First use Feb. 7, 1968.

Class 25 — Locks and Safes

SN 279,169. C. W. Cheney & Son Limited, Hockley, Birmingham, England. Filed Aug. 28, 1967.

CHENEY

Owner of Reg. No. 842,722.
For Locks for Suitcases, Traveling Bags, Attaché Cases, Trunks, and Like Articles (Int. Cl. 6).
First use 1911; in commerce 1951.

Class 26 — Measuring and Scientific Appliances

SN 245,939. Miligo Electronic Corporation, Miami, Fla. Filed May 18, 1966.

MATE

For Punch Units for Producing Code-Punched Record Media, and Reader Units for Reading Media (Int. Cl. 9).
First use at least as early as Oct. 8, 1965.

SN 248,047. Mitutoyo Mfg. Co., Ltd., Minato-ku, Tokyo, Japan. Filed June 14, 1966.

For Vernier Calipers, Micrometers, Cylinder Gauges, Dial Indicators, Gauge Blocks, Optical Parallels, Calibration Testers, Electronic Microcomparators, Optical Comparators, Cathetometers, Surface Roughness Testers, Mirror Micrometers, and Height Gauges (Int. Cl. 9).
First use March 1953 on micrometers and vernier calipers; in commerce May 1955.

SN 260,267. Medivance (Instruments) Limited, London, England, by change of name from N. & J. Motors Limited, London, England. Filed Dec. 7, 1966.

VELOPEX

Owner of British Reg. No. 866,927, dated July 17, 1964.
For X-Ray Film Developing Machines (Int. Cl. 9).

SN 266,089. Products Engineering Corp., Los Angeles, Calif. Filed Mar. 6, 1967.

For Gages and Measuring Tools—Namely, Wire, Thread and Thickness Gages, Calipers, Scales, Dividers, and Telescope Gages (Int. Cl. 9).
First use during 1942.

SN 266,941. Spectra-Physics, Inc., Mountain View, Calif. Filed Mar. 16, 1967.

TRANSIT-LITE

For Laser Transits (Int. Cl. 9).
First use Dec. 12, 1966.

SN 267,193. Swiss Industrial Company, Neuhausen-Rhinefalls, Schaffhouse, Switzerland. Filed Mar. 20, 1967.

SIGOMATIC

Priority claimed under Sec. 44(d) on Swiss Reg. No. 221,374, dated Oct. 27, 1966.
For Weight Checking Apparatus for Packaging Machines (Int. Cl. 9).

SN 267,510. Durrum Instrument Corporation, Palo Alto, Calif. Filed Mar. 24, 1967.

DIAL-A-PUMP

For Variable Volume Displacement Tubing Pumps for Laboratory Use (Int. Cl. 9).
First use Aug. 8, 1963.

SN 268,382. Chadwick-Miller, Inc., Boston, Mass., assignee of Chadwick-Miller Importers, South Boston, Mass. Filed Apr. 5, 1967.

WALK-A-MATIC

For Pedometers (Int. Cl. 9).
First use September 1964.

SN 273,212. Stewart-Warner Corporation, Chicago, Ill. Filed June 6, 1967.

UNIVOLT

For Electrically Operated Clock-Type Meter for Indicating the Number of Hours of Operation of a Device (Int. Cl. 9).
First use Jan. 31, 1967.

SN 276,456. Lewis Engineering Company, Naugatuck, Conn. Filed July 20, 1967.

For Pyrometers (Int. Cl. 9).
First use November 1964.

SN 278,288. De Jur-Amsco Corporation, Long Island City, N.Y. Filed Aug. 15, 1967.

AUTOCRITIC

Owner of Reg. No. 430,021.
For Photographic Apparatus—Namely, Slide Projectors (Int. Cl. 9).
First use Mar. 12, 1967.

SN 278,745. Tasco Sales, Inc., Miami, Fla. Filed Aug. 21, 1967.

TASCO

Owner of Reg. No. 705,965.
For Educational Dissecting Kit Consisting Essentially of a Scissors, Scalpel, Probe, Pincer, and Magnifying Glass (Int. Cl. 9).
First use July 1, 1952.

SN 286,114. The Firestone Tire & Rubber Company, Akron, Ohio. Filed Dec. 4, 1967.

PORT-O-WEIGH

For Portable Truck Scales (Int. Cl. 9).
First use Nov. 17, 1967.

SN 287,018. Impulsphysik G.m.b.H., Hamburg-Rissen, Germany. Filed Dec. 15, 1967.

SKOPOGRAPH

For Transmissometers (Int. Cl. 9).
First use Aug. 15, 1958; in commerce Aug. 15, 1958.

SN 287,019. Impulsphysik G.m.b.H., Hamburg-Rissen, Germany. Filed Dec. 15, 1967.

VIDEOGRAPH

For Transmissometers (Int. Cl. 9).
First use Aug. 15, 1964; in commerce Aug. 15, 1964.

SN 287,130. American Chain & Cable Company, Inc., New York, N.Y. Filed Dec. 18, 1967.

TUKON

For Machines for Determining the Hardness of Materials, and Test Blocks Used for Reference Standards in the Measurement of the Hardness of Materials (Int. Cl. 9).
First use Apr. 7, 1943.

SN 287,305. Lusteroid Container Company, Inc., Maplewood, N.J. Filed Dec. 20, 1967.

BUTYREX

For Test Tubes and Centrifuge Tubes, Made of Plastic (Int. Cl. 9).
First use July 17, 1966.

SN 288,675. Cabometer, Inc., Anniston, Ala. Filed Jan. 12, 1968.

CABOMETER

Owner of Reg. No. 438,133.
For Taxi-Meters (Int. Cl. 9).
First use Jan. 1, 1946.

SN 288,861. Rotolite Corporation, Stirling, N.J. Filed Jan. 15, 1968.

VACU-FLO

For Diazo Developer (Int. Cl. 9).
First use Oct. 27, 1967.

SN 296,779. Testron, Inc., Chicago, Ill. Filed Apr. 29, 1968.

ZIP-CLIP

For Electrical Connectors for Test Equipment (Int. Cl. 9).
First use Feb. 14, 1968.

Class 27 — Horological Instruments

SN 230,098. Sunbeam Corporation, Chicago, Ill. Filed Oct. 13, 1965.

BELL TIME

Applicant disclaims the exclusive right to the word "Time," except as included in the mark shown.
For Clocks (Int. Cl. 14).
First use June 22, 1965.

SN 240,978. Sunbeam Corporation, Chicago, Ill. Filed Mar. 14, 1966.

TOUCH ALARM

For Clocks (Int. Cl. 14).
First use June 23, 1965.

Class 28 — Jewelry and Precious-Metal Ware

SN 283,684. A. L. Meadows, d.b.a. Nugget Jewelry Manufacturing, Colorado Springs, Colo. Filed Oct. 30, 1967.

A

The mark consists of a representation of the letters "AL."
For Tie Tacs, Charm Bracelets and Charms Therefor, Earrings, Cuff Links, Pins, Watch Bands, Rings, and Jewelry (Int. Cl. 14).
First use June 1963.

SN 286,043. Melvin Taubman, d.b.a. Melson Jewelry Co., New York, N.Y. Filed Dec. 1, 1967.

INITIALLY YOURS

For Men's, Women's and Children's Rings, Cuff Links and Tie Tacks, Made of Precious Metal (Int. Cl. 14).
First use Apr. 1, 1967.

SN 286,776. The Richelieu Corp., Holbrook, N.Y. Filed Dec. 12, 1967.

SAVOY

For Necklaces, Bracelets, Finger Rings, Jewelry Clips, Brooches, and Earrings (Int. Cl. 14).
First use January 1945.

Class 29 — Brooms, Brushes, and Dusters

SN 285,137. The Kendall Company, Walpole, Mass. Filed Nov. 17, 1967.

SYSTON

For Nonwoven Wiping Cloths for Use in the Graphic Arts (Int. Cl. 16).
First use Oct. 3, 1967.

Class 31 — Filters and Refrigerators

SN 277,691. National Automotive Parts Association, Chicago, Ill. Filed Aug. 7, 1967. COLLECTIVE MARK.

NAPA

For Automotive Fluid Filters (Int. Cl. 12).
First use May 9, 1966.

SN 286,051. Walker Manufacturing Company, Racine, Wis. Filed Dec. 1, 1967.

For Oil, Air, and Fuel Filters for Internal Combustion Engines (Int. Cl. 7).
First use June 29, 1967.

SN 286,264. Golden Gem Growers Inc., Umatilla, Fla. Filed Dec. 5, 1967.

GOLDEN GEM

For Beverage Dispensers, Electrically Operated and Including a refrigeration system (Int. Cl. 11).
First use June 13, 1967.

SN 296,616. Olin Mathieson Chemical Corporation, New York, N.Y. Filed Apr. 26, 1968.

PORET

For Spherical Shot for Use in Filtering (Int. Cl. 1).
First use Mar. 1, 1968.

Class 32 — Furniture and Upholstery

SN 276,760. Norbert Miotke, Detroit, Mich. Filed July 25, 1967.

EASY READER

For Combination Reading Stand and Utility Table (Int. Cl. 20).
First use June 14, 1967.

SN 281,925. Seven Seas Incorporated, Westport, Conn. Filed Oct. 5, 1967.

SEVEN SEAS

For Chairs, Sofas, Stools, Benches, Ottomans, and Tables (Int. Cl. 20).
First use June 16, 1966.

SN 286,141. Heckethorn Manufacturing Company, Dyersburg, Tenn. Filed Dec. 4, 1967.

BREEZ-ILATED

Owner of Reg. No. 656,818.
For Ventilated Seat Cushions (Int. Cl. 20).
First use Sept. 20, 1967.

SN 291,289. C. E. Robinson Company, Joliet, Ill. Filed Feb. 16, 1968.

STAK·PAL

For Steel Storage Racks (Int. Cl. 20).
First use on or at least by Oct. 1, 1958.

Class 34 — Heating, Lighting, and Ventilating Apparatus

SN 251,086. CRS Industries, Inc., Dresher, Pa. Filed July 5, 1966.

For Air Conditioning and Air Cleaning Distribution Apparatus Fabricated of Thin Flexible Impervious Sheet Material With Delivery Openings Which Provide Uniform Air Discharge to a Desired Space (Int. Cl. 11).
First use June 7, 1966.

SN 264,766. F. L. Smidth & Co., New York, N.Y. Filed Feb. 15, 1967.

FOLAX

For Cement-Making Kilns, Clinker-Grate Coolers Therefor, and Repair Parts Therefor (Int. Cl. 11).
First use in 1960.

SN 270,294. Solar Light Manufacturing Co., Melrose Park, Ill. Filed Apr. 28, 1967.

AIRLUME

For Combination Fluorescent Lighting Fixtures and Air Diffusing Housings for Use With Air Ventilation Systems (Int. Cl. 11).
First use Dec. 15, 1959.

SN 272,231. Ida Weinman, Rego Park, N.Y. Filed May 23, 1967.

IDEAS BY ADELWINE

Applicant disclaims the words "Ideas by" apart from the mark as shown.
For Kitchen and Household Appliances—Namely, Coffee and Tea Heaters and Hot Plates, Fueled With Small Kerosene Lamps or Solidified Liquid Fuel (Int. Cl. 11).
First use Mar. 15, 1967.

SN 285,374. The Majestic Company, Inc., Huntington, Ind. Filed Nov. 22, 1967.

GASILATOR

For Pre-Fabricated Gas Fireplaces for Domestic Use. (Int. Cl. 11).
First use Nov. 6, 1967.

SN 285,435. The Majestic Company, Inc., Huntington, Ind. Filed Nov. 22, 1967.

CAPRICE

For Pre-Fabricated Electric Fireplaces for Domestic Use (Int. Cl. 11).
First use Nov. 6, 1967.

SN 286,756. Daryl Industries, Inc., Miami, Fla. Filed Dec. 12, 1967.

Jolo LIGHTING

No claim is made to the word "Lighting" apart from the mark as shown.
For Plastic Globes for Light Fixtures (Int. Cl. 11).
First use on or about Oct. 1, 1966.

SN 296,504. Baldwin-Ehret-Hill, Incorporated, Trenton, N.J. Filed Apr. 25, 1968.

SOUNDPLENUM

For Steel Casing Panels for Air Conditioning System Plenums (Int. Cl. 6).
First use Nov. 15, 1967.

Class 35 — Belting, Hose, Machinery Packing, and Nonmetallic Tires

SN 279,819. The Gates Rubber Company, Denver, Colo. Filed Sept. 7, 1967.

Steam Ace

The word "Steam" is disclaimed apart from the mark as a whole.
For Hose for Material Conveyance (Int. Cl. 17).
First use May 4, 1967.

SN 290,508. McCreary Tire & Rubber Company, Indiana, Pa. Filed Feb. 7, 1968.

SCOT HAWK

For Vehicle Tires (Int. Cl. 12).
First use Dec. 27, 1967.

SN 290,511. McCreary Tire & Rubber Company, Indiana, Pa. Filed Feb. 7, 1968.

SCOT HUGGER

For Vehicle Tires (Int. Cl. 12).
First use Dec. 27, 1967.

SN 291,417. N.V. Rubberfabriek Vredestein, Loosduinen, The Hague, Netherlands. Filed Feb. 19, 1968.

BUFFALO

Owner of Dutch Reg. No. 116,691, dated Oct. 10, 1953.
For Tires and Inner Tubes for Automobiles (Int. Cl. 12).

SN 291,576. The Armstrong Rubber Company, West Haven, Conn. Filed Feb. 21, 1968.

DYNAGLASS

For Pneumatic Tires (Int. Cl. 12).
First use on or about Feb. 16, 1968.

Class 36 — Musical Instruments and Suppiies

SN 251,553. Martel Electronics Sales Incorporated, Los Angeles, Calif. Filed Aug. 2, 1966.

UHER 4000 REPORT-L

Owner of Reg. No. 821,631.
For Tape Recorders (Int. Cl. 9).
First use Sept. 15, 1964.

SN 266,083. Penco Record Company, New Bedford, Mass. Filed Mar. 6, 1967.

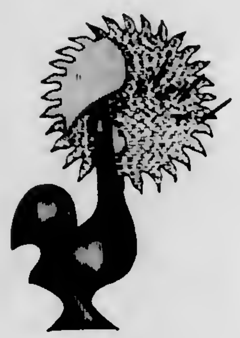

The drawing is lined for the colors red and yellow.
For Phonograph Records (Int. Cl. 9).
First use Sept. 22, 1966.

SN 266,493. Ambassador Record Corporation, Newark, N.J. Filed Mar. 13, 1967.

AMBASSADOR

For Phonograph Records of the Circular Disc Type (Int. Cl. 9).
First use Apr. 1, 1965.

SN 270,955. Rheem Manufacturing Company, New York, N.Y. Filed May 8, 1967.

KEE-BASS

For Electronic Organs and Electronic Organ Keyboards (Int. Cl. 15).
First use Mar. 9, 1967.

SN 277,686. Motown Record Corporation, Detroit, Mich. Filed Aug. 7, 1967.

THE MOTOWN SOUND

No claim is made to the exclusive use of the word "Sound" separately and apart from the mark. Owner of Reg. No. 800,977.
For Phonograph Records and Tape Cartridges (Int. Cl. 9).
First use Aug. 25, 1966.

SN 283,111. D'Merle Guitars, Inc., Huntington Station, N.Y. Filed Oct. 23, 1967.

D'Angelico NEW YORK

Applicant disclaims the words "New York" apart from the mark as shown.
For Guitars, and Packaged Strings for Guitars, Banjos, Ukuleles, Mandolins, and Electric Bass Instruments (Int. Cl. 15).
First use April 1947.

SN 289,971. Columbia Broadcasting Systems, Inc., New York, N.Y. Filed Jan. 31, 1968.

LEGACY

Owner of Reg. No. 712,861.
For Grooved Phonograph Records (Int. Cl. 9).
First use Dec. 14, 1967.

Class 37 — Paper and Stationery

SN 254,109. Aud-It-Quik Systems Company, Inc., Brentwood, Md. Filed Sept. 9, 1966.

AUD-IT-QUIK

For Partially Printed Loose Leaf Forms Which Constitute Journals and Ledgers, To Be Used as an Accounting System, and Binders Therefor (Int. Cl. 16).
First use Jan. 28, 1965.

SN 261,252. Jas. (Jim) Milton Sherrill, d.b.a. E-Z-Way Business and Tax Record, Memphis, Tenn. Filed Dec. 21, 1966.

EZway

For Bookkeeping Record Books (Int. Cl. 16).
First use January 1946.

SN 296,383. Johnson & Johnson, New Brunswick, N.J. Filed Apr. 24, 1968.

SCRIPTAPE

For Label Tapes (Int. Cl. 16).
First use Feb. 14, 1968.

Class 38 — Prints and Publications

SN 249,578. O. O. Ressel, d.b.a. Woodrow Wilson Co., Newport Beach, Calif. Filed July 5, 1966.

COMPLETE-A-PLATE

For Printed Envelopes To Be Used by Others in Promoting the Sale of Their Goods Through a Customer Participation Game (Int. Cl. 16).
First use June 30, 1966.

SN 271,420. Clio Press, Santa Barbara, Calif. Filed May 15, 1967.

A B C - CLIO

For Books and Periodical Publications Such as Bibliographies, Indexes, Bulletins, Abstracts, Monographs, and Occasional Papers in the Field of History, Political Science, Library Science and the Social Sciences (Int. Cl. 16).
First use Mar. 3, 1967.

SN 273,386. The Family Circle, Inc., New York, N.Y. Filed June 8, 1967.

Family Circle

Owner of Reg. Nos. 617,878 and 676,725.
For Monthly Magazine (Int. Cl. 16).
First use Mar. 2, 1966; June 3, 1932, in another form.

SN 276,240. Loeffler & Co., Inc., d.b.a. Viewpoint Books, San Diego, Calif. Filed July 18, 1967.

VIEWPOINT BOOKS

Applicant disclaims the word "Books."
For Books (Int. Cl. 16).
First use Mar. 9, 1967.

SN 280,535. The American Soybean Association, Hudson, Iowa. Filed Sept. 18, 1967.

THE Soybean Digest

BLUE BOOK ISSUE

Owner of Reg. Nos. 722,603 and 794,468.
For Yearbook (Int. Cl. 16).
First use March 1965.

SN 284,200. Morris A. Hertzon, Miami Beach, Fla. Filed Nov. 6, 1967.

"QUOTO FOTO"

For Sales Quota Illustrative Charts and Graphs Designed for Sales Contests (Int. Cl. 16).
First use Dec. 26, 1961.

SN 284,624. Creative Educational Society, Inc., Mankato, Minn. Filed Nov. 13, 1967.

PUBLISHERS OF BOOKS FOR YOUNG PEOPLE

No claim is made to the words "Publishers of Books for Young People," apart from the emblem, except in the form shown.
For Educational Books (Int. Cl. 16).
First use Aug. 17, 1967.

Class 39 — Clothing

SN 244,626. Steinmetz Bros., Inc., New York, N.Y. Filed Apr. 29, 1966.

STYLE WISE

For Shirts, Sport Shirts, Polo Shirts, Pants, and Pajamas (Int. Cl. 25).
First use July 1, 1958.

SN 255,963. Cities Service Oil Company, Tulsa, Okla. Filed Oct. 7, 1966.

CITGO

The drawing is lined for orange and red. Owner of Reg. Nos. 764,543, 811,941, and others.
For Men's Shirts, Trousers, Jackets, Coats, Coveralls, Caps, and Rain Suits (Int. Cl. 25).
First use at least as early as May 17, 1965.

SN 267,899. Anwelt Corporation, Fitchburg, Mass. Filed Mar. 30, 1967.

Applicant disclaims the rectangular shaped outline apart from the mark as shown.
For Shoes (Int. Cl. 25).
First use Apr. 7, 1966.

SN 270,481. Endicott Johnson Corporation, Endicott, N.Y. Filed May 2, 1967.

STORM MASTER

For Boots and Shoes (Int. Cl. 25).
First use Mar. 11, 1967.

SN 271,775. Dhobi Weatherlux Limited, Oldham, England. Filed May 18, 1967.

DHOBI

Owner of British Reg. No. 771,929, dated Dec. 5, 1957.
For Raincoats, Showerproof Topcoats, Waterproof Coats, and Trousers (Int. Cl. 25).

SN 274,576. Aileen, Inc., New York, N.Y. Filed June 23, 1967.

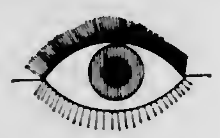

The red eye

The drawing is lined for red, but no claim is made to color.
For Misses', Junior Misses', Girls' and Infants' Sportswear—Namely, Shorts, Pants, Shirts, Dresses, Blouse Tops, Jackets, Sweaters, Slacks, Blouses, and Beach Wear (Int. Cl. 25).
First use May 22, 1967.

SN 275,381. Martin's, d.b.a. Martins, Inc. and Martin's, Inc., Brooklyn, N.Y. Filed July 5, 1967.

miss marleigh jr.

Owner of Reg. No. 235,881.
For Misses' Dresses, Coats, Lingerie, Bras, Corsets, and Hosiery (Int. Cl. 25).
First use June 1956.

SN 276,866. Rapid-American Corporation, New York, N.Y. Filed July 26, 1967.

FRANK MERRIWELL

"Frank Merriwell" is the name of a fictitious person and is not the name of any particular living individual.
For Men's and Boys' Outer Garments—Namely, Coats, Suits, Sport Coats, Jackets, Top Coats, Overcoats, Slacks, Trousers, and Vests (Int. Cl. 25).
First use June 19, 1967.

SN 278,796. Hansen Glove Corporation, Milwaukee, Wis. Filed Aug. 22, 1967.

AIRLOOM BY HANSEN

Owner of Reg. Nos. 362,259 and 579,175.
For Ladies' Fabric Gloves (Int. Cl. 25).
First use Aug. 10, 1967.

SN 279,379. Danchin, Societe Anonyme, Madeleine, France. Filed Aug. 30, 1967.

linflor

Owner of French Reg. No. 21,899, dated Dec. 30, 1957 (Lille); Natl. Inst. No. 103,170.
For Lingerie, Tailored Suits, Overcoats, Blazers, Dresses, and Skirts (Int. Cl. 25).

SN 279,508. Wayne-Gossard Corporation, Humboldt, Tenn. Filed Aug. 31, 1967.

WAIST-AWAYS

For Ladies' Hosiery (Int. Cl. 25).
First use on or about Aug. 4, 1967.

SN 280,181. Silver Knit Hosiery Mills, Inc., High Point, N.C. Filed Sept. 12, 1967.

London Legs

Applicant makes no claim to the word "London" apart from the mark as shown.
For Hosiery (Int. Cl. 25).
First use Aug. 25, 1967.

SN 280,360. Milton Julian, Chapel Hill, N.C. Filed Sept. 11, 1967.

Milton's
Clothing Cupboard

For Suits, Sport Jackets, Trousers, Shirts, Neckwear, and Shoes (Int. Cl. 25).
First use on or about Aug. 1, 1948.

SN 280,608. Levy Bros. Frocks, Inc., New York, N.Y. Filed Sept. 18, 1967.

TINA LEE

The mark "Tina Lee" is fanciful and not the name of any living individual. Owner of Reg. No. 693,546.
For Women's and Misses' Dresses, Smocks, Pinafores, and Sundresses; Brunch Coats, Wrap-Around Dresses, and Dusters (Int. Cl. 25).
First use Feb. 13, 1959.

SN 290,927. Youthcraft Creations Inc., New York, N.Y. Filed Feb. 12, 1968.

TEEN MATES

Owner of Reg. No. 501,122.
For Foundation Garments—Namely, Corsets, Girdles, and Brassieres (Int. Cl. 25).
First use October 1946.

SN 291,557. Maidenform, Inc., New York, N.Y. Filed Feb. 21, 1968.

TAFF-SMOOTH

For Foundation Garments and Lingerie (Int. Cl. 25).
First use Feb. 2, 1968.

SN 291,807. Alamo Manufacturing Co., Inc., New York, N.Y. Filed Feb. 26, 1968.

the NOW generation

For Ladies' Dresses, Slacks, Blouses, Skirts, and Jackets (Int. Cl. 25).
First use early January 1968.

SN 293,889. Active Editions, Ltd., New York, N.Y. Filed Mar. 22, 1968.

ACTIVE EDITIONS

For Girls' and Boys' Wearing Apparel—Namely, Dresses, Blouses, Shorts, Slacks, Skirts, Sweaters, Overalls, Hats, Coats, and Jackets (Int. Cl. 25).
First use Feb. 13, 1968.

Class 40—Fancy Goods, Furnishings, and Notions

SN 287,711. All-American Brush Mfg. Corp., Newark, N.J. Filed Dec. 28, 1967.

LOVELEE LIFT

Applicant disclaims the word "Lift" apart from the mark as shown.
For Hair Styling Tool in the Nature of Multi-Purpose Comb (Int. Cl. 21).
First use Aug. 4, 1967.

Class 42—Knitted, Netted, and Textile Fabrics, and Substitutes Therefor

SN 266,601. Toby Textiles, Inc., Long Island City, N.Y. Filed Mar. 13, 1967.

THE LOOK

For Fabrics for Use in Making All Types of Men's, Women's, and Children's Clothing (Int. Cl. 24).
First use Jan. 16, 1967.

SN 288,202. Ely & Walker, Inc., Wilmington, Del. Filed Jan. 5, 1968.

AMERICAN HOME

For Sheets, Pillowcases, Bedspreads, and Woven and Knitted Fabrics in the Piece of Cotton, Silk, or Wool, and Combinations Thereof (Int. Cl. 24).
First use Jan. 1, 1906.

SN 288,595. Burlington Industries, Inc., New York, N.Y. Filed Jan. 11, 1968.

Mooresville

Owner of Reg. No. 437,364.
For Cotton Piece Goods (Int. Cl. 24).
First use Apr. 10, 1947.

SN 288,882. J. P. Stevens & Co., Inc., New York, N.Y. Filed Jan. 15, 1968.

FILTERTEMP

Owner of Reg. Nos. 727,764 and 728,361.
For Fabrics of Glass Fibers for Industrial Purposes (Int. Cl. 24).
First use Dec. 21, 1967.

Class 44—Dental, Medical, and Surgical Appliances

SN 264,238. Popper & Sons, Inc., New York, N.Y. Filed Feb. 8, 1967.

RED VUE

The word "Red" is disclaimed apart from the mark as shown.
For Fever Thermometers (Int. Cl. 9).
First use February 1957.

SN 288,055. Hydro Manufacturing, Inc., Los Angeles, Calif. Filed Jan. 4, 1968.

For Portable Apparatus for Cleaning Teeth and Massaging Gums by Means of a Water Jet (Int. Cl. 21).
First use Oct. 12, 1967.

SN 289,256. American Hospital Supply Corporation, Evanston, Ill. Filed Jan. 22, 1968.

TRU-TORC

For Dental Handpiece (Int. Cl. 10).
First use in or before November 1965.

SN 289,464. Air Reduction Company, Incorporated, New York, N.Y. Filed Jan. 24, 1968.

CARE-ETTE

For Baby Incubators (Int. Cl. 10).
First use May 22, 1967.

Class 45—Soft Drinks and Carbonated Waters

SN 274,433. Jack Levine, d.b.a. Cocktail Mate Products Co., Royal Oak, Mich. Filed June 21, 1967.

COCKTAIL MATE

The word "Cocktail" is disclaimed apart from the mark as shown.
For Non-Alcoholic Cocktail Mix (Int. Cl. 32).
First use June 10, 1967.
Subj. to Intf. with SN 277,925.

SN 277,925. Paul Masson, Inc., d.b.a. Paul Masson and Paul Masson Vineyards, San Francisco, Calif. Filed Aug. 9, 1967.

BRANDY MATE

Applicant disclaims the word "Brandy" apart from the mark as shown.
For Non-Alcoholic Mixes (Int. Cl. 32).
First use June 5, 1967.
Subj. to Intf. with SN 274,433.

SN 280,145. Canada Dry Corporation, New York, N.Y. Filed Sept. 12, 1967.

Flavor-Stripe

No claim is made to the word "Flavor" apart from the mark as shown.
For Carbonated Beverages Used as Soft Drinks and as Mixers (Int. Cl. 32).
First use on or before July 31, 1967.

SN 280,146. Canada Dry Corporation, New York, N.Y. Filed Sept. 12, 1967.

Stripe-Top

For Carbonated Beverages Used as Soft Drinks and as Mixers (Int. Cl. 32).
First use on or before July 31, 1967.

SN 289,941. The Coca-Cola Company, Atlanta, Ga. Filed Jan. 31, 1968.

SACI

For Protein Based Chocolate Flavored Soft Drink (Int. Cl. 32).
First use Jan. 29, 1968.

SN 292,834. Arden-Mayfair, Inc., d.b.a. Low Cost Mkts., Los Angeles, Calif. Filed Mar. 11, 1968.

CAL FRESH

Owner of Reg. No. 837,623.
For Regular and Low Calorie Soft Drinks (Int. Cl. 32).
First use Nov. 15, 1967.

Class 46—Foods and Ingredients of Foods

SN 143,935. Colonial Stores Incorporated, Norfolk, Va. Filed May 7, 1962.

SUGAR & SPICE

For Bakery Products—Namely, Cakes, Cookies, Breads, Rolls, Doughnuts, Pastries, and Crackers (Int. Cl. 30).
First use Jan. 5, 1962.

SN 248,152. Mohr Orchards, Inc., Fogelsville, Pa. Filed June 15, 1966.

MOHRS

Owner of Reg. No. 796,490.
For Fresh Fruit, Apple Cider, and Honey Apple Butter (Int. Cls. 29, 31, and 33).
First use on or about Apr. 4, 1966.

SN 267,559. T.F.H. Publications, Inc., Jersey City, N.J. Filed Mar. 24, 1967.

SPLIT

For Fish Food (Int. Cl. 31).
First use Dec. 29, 1966.

SN 269,349. Rich Products Corporation, Buffalo, N.Y. Filed Apr. 17, 1967.

SPOON N' SERVE

For Edible Oleaginous Emulsion in a Whipped or Aerated Condition for Use as a Topping on Desserts, Salads, and the Like (Int. Cl. 29).
First use Mar. 2, 1967.

SN 269,905. Malaga Co-Ops, Inc., Malaga, Wash. Filed Apr. 24, 1967.

THREE LAKES

For Fresh Deciduous Fruits—Namely, Apples (Int. Cl. 31).
First use November 1965.

SN 269,949. World Foods Corporation, Boulder, Colo. Filed Apr. 24, 1967.

GO-GO BURGERS

The word "Burgers" is disclaimed apart from the mark as shown.
For Frozen Stuffed Hamburger Patties (Int. Cl. 29).
First use Oct. 10, 1966.

SN 270,280. Max Russer Inc., Rochester, N.Y. Filed Apr. 28, 1967.

SMOOTHIE

For Prepared Meat Products—Namely, Liverwurst (Int. Cl. 29).
First use Dec. 1, 1966.

SN 270,394. John Kraft Sesame Corporation, Paris, Tex. Filed May 1, 1967.

SCHNITZEL BUDS

For Snack Foods in the Form of Chips Containing Wheat Flour and Sesame Seed as the Principal Ingredients (Int. Cl. 30).
First use Feb. 8, 1967.

SN 270,675. Anthony Guerriero, Fresno, Calif. Filed May 4, 1967.

CRY BABY

For Fresh Grapes (Int. Cl. 31).
First use 1957.

SN 271,249. Hillside Dairy Company, d.b.a. Flavor-Ful Foods Co., Cleveland Heights, Ohio. Filed May 11, 1967.

CREMELO

For Non-Dairy Vegetable Liquid Coffee Whitener (Int. Cl. 29).
First use October 1966.

SN 272,884. Chocoladefabriken Lindt & Sprungli AG, Kilchberg, Switzerland. Filed June 2, 1967.

LINDT CHOCOLETTI

Without prejudice to its common law rights and for the purpose of this registration only, applicant makes no claim to the notation "Chocoletti" apart from the mark as shown.
Owner of U.S. Reg. Nos. 87,306, 556,669, and 844,220.
For Chocolate Candy (Int. Cl. 30).
First use Sept. 14, 1964; in commerce about June 17, 1966.

SN 273,782. Kern County Land Company (Delaware corporation), San Francisco, Calif., assignee of Kern County Land Company (California corporation), San Francisco, Calif. Filed June 13, 1967.

KERN LAND

Owner of Reg. Nos. 703,633, 704,052, and 750,665.
For Almonds (Int. Cl. 29).
First use Dec. 12, 1966.

SN 273,783. Kern County Land Company (Delaware corporation), San Francisco, Calif., assignee of Kern County Land Company (California corporation), San Francisco, Calif. Filed June 13, 1967.

KERN LAND

Owner of Reg. Nos. 703,633, 704,052, and 750,665.
For Almonds (Int. Cl. 29).
First use Dec. 12, 1966.

SN 274,821. Mister Donut of America, Inc., Westwood, Mass. Filed June 26, 1967.

Owner of Reg. Nos. 427,509 and 673,298.
For Coffee, Flour, Cream and Fruit Fillings, and Jellies for Doughnuts, Vegetable Shortening, Ice Cream, Sandwiches, and Doughnuts (Int. Cls. 29 and 30).
First use at least as early as about November 1966.

SN 275,257. SCM Corporation, New York, N.Y., assignee of The Glidden Company, d.b.a. Durkee Famous Foods, Cleveland, Ohio. Filed July 3, 1967.

WHITE CREST

For Vegetable Oil Shortening (Int. Cl. 29).
First use Sept. 5, 1962.

SN 275,536. Land O'Lakes Creameries, Inc., d.b.a. Dairy Maid Products, Minneapolis, Minn. Filed July 7, 1967.

FLASH

Owner of Reg. No. 709,728.
For Instant Nonfat Dry Milk and Instant Chocolate Flavored Preparation for Use in Making a Chocolate Flavored Drink by Adding It to Water, Canned Ice Cream Mix, and Milk Concentrate, Non-Dairy Product as a Substitute for Coffee Cream and Liquid Milk (Int. Cls. 29 and 30).
First use 1956.

SN 276,814. Brooke Bond Foods, Inc., New York, N.Y., by change of name from Brooke Bond Tea Co., Inc., New York, N.Y. Filed July 26, 1967.

TRIMITS

For Edible Sugar Decorations To Be Used on Cakes and the Like (Int. Cl. 30).
First use as early as August 1958.

SN 276,942. National Oats Company, Inc., Cedar Rapids, Iowa, assignee of National Oats Company, Cedar Rapids, Iowa. Filed July 27, 1967.

3 MINUTE

The drawing is lined for red and blue. Owner of Reg. No. 237,301.
For Cereal Food Products and Ingredients of Foods—Namely, Oats, Corn Grits, Corn Meal, and Unpopped Popcorn (Int. Cl. 30).
First use on or before Apr. 12, 1923.

SN 279,522. Bauer & Loewy Trading Corp., New York, N.Y. Filed Sept. 1, 1967.

CERES

For Cocoa Powder (Int. Cl. 30).
First use March 1957.

SN 279,650. Hunt-Wesson Foods, Inc., Fullerton, Calif. Filed Sept. 5, 1967.

KETTLE-BLEND

For Canned Spaghetti Sauce (Int. Cl. 30).
First use June 28, 1967.

SN 280,116. The Veterinary Research Co., Inc., Oceanside, N.Y. Filed Sept. 11, 1967.

VETERINARY VR RESEARCH
BRAND

Applicant disclaims the words "Veterinary Research" and "Brand" apart from the mark as shown.
For Dog Food and Cat Food (Int. Cl. 31).
First use Aug. 4, 1967.

SN 282,521. Ajinomoto Kabushiki Kaisha, d.b.a. Ajinomoto Co., Inc., Chuo-ku, Tokyo, Japan. Filed Oct. 16, 1967.

AJI-NO-MOTO

"Aji-No-Moto" means "element of taste" in the English language. Owner of U.S. Reg. No. 580,656.
For Food Flavoring Agent of a Chemical Nature (Int. Cl. 30).
First use Apr. 18, 1967; in commerce Apr. 18, 1967; 1909 as to "Aji-No-Moto."

SN 283,448. Walter M. Lowney Company Limited, Sherbrooke, Quebec, Canada. Filed Oct. 26, 1967.

MILK NUT LOAF
L

Applicant disclaims the right, for the purpose of this application and any resulting registration, to the exclusive use of the words "Milk Nut Loaf" apart from the trademark. Owner of Canadian Reg. No. 148,689, dated Dec. 30, 1966.
For Chocolate Bars (Int. Cl. 30).

SN 283,644. Easy Eggs Corporation, Whitesboro, N.Y. Filed Oct. 30, 1967.

FROZEN
easy
eggs

All the words except "Easy" are disclaimed apart from the mark as shown.
For Frozen Eggs (Int. Cl. 29).
First use Sept. 20, 1967.

SN 284,053. Earl C. Smith, d.b.a. Cherrystone Co., Amityville, N.Y. Filed Nov. 2, 1967.

CHERRYSTONE

For Baked Party Appetizers—Namely, Cheese Flavored Sticks and Straws (Int. Cl. 30).
First use Aug. 30, 1967.

SN 284,267. Click'n Chick'n, Inc., South Elgin, Ill. Filed Oct. 23, 1967.

CLICK'N
CHICK'N

Applicant disclaims the word "Chick'n" apart from the mark as shown.
For Cooked, Carry Out Chicken (Int. Cl. 29).
First use Nov. 10, 1965.

SN 285,260. Louis Sherry, Inc., New Hyde Park, N.Y., assignee of Slenderella, Inc., New Hyde Park, N.Y. Filed Nov. 20, 1967.

SLENDERELLA

Owner of Reg. Nos. 386,714 and 750,249.
For Low Calorie Sweetener (Int. Cl. 1).
First use Jan. 22, 1965.

SN 285,887. African Explosives and Chemical Industries Limited, Johannesburg, Transvaal, Republic of South Africa. Filed Oct. 23, 1967.

PROSUP

Owner of South African Reg. No. 65/0587, dated Feb. 15, 1965.
For Animal Food Supplement (Int. Cl. 31).

SN 286,163. McCormick & Company, Incorporated, Baltimore, Md. Filed Dec. 4, 1967.

GOLDEN WEST

Owner of Reg. Nos. 65,822, 801,431, and others.
For Tea (Int. Cl. 30).
First use Nov. 16, 1967.

SN 286,165. Mohawk Grocery Company, d.b.a. Hometown Products Company, Dothan, Ala. Filed Dec. 4, 1967.

HOMETOWN

For Canned Peas, Canned Corn, Mayonnaise, Peanut Butter, Flake Coconut, Raw Shelled Peanuts, and Tea (Int. Cls. 29 and 30).
First use September 1953.

SN 286,228. Antony Worham Limited, London, England. Filed Dec. 4, 1967.

TUDOR QUEEN

Owner of British Reg. No. 720,528, dated Aug. 4, 1953.
For Canned Meats, Canned Fish, Canned Fruit, and Canned Vegetables (Int. Cl. 29).

SN 286,711. Oroweat Baking Company, Los Angeles, Calif. Filed Dec. 11, 1967.

FRANCISCO

For Bread (Int. Cl. 30).
First use Feb. 19, 1966.

SN 286,957. The Pillsbury Company, Minneapolis, Minn. Filed Dec. 14, 1967.

BUTTERBURST

For Refrigerated Dough Products—Namely, Dinner Rolls (Int. Cl. 30).
First use Nov. 2, 1967.

SN 287,133. American Sugar Company, New York, N.Y. Filed Dec. 18, 1967.

AMERFOND

For Sugar (Int. Cl. 30).
First use Oct. 27, 1967.

SN 288,969. National Biscuit Company, New York, N.Y. Filed Jan. 16, 1968.

TWIGS

For Snack Crackers (Int. Cl. 30).
First use Nov. 3, 1967.

SN 290,545. A. E. Staley Manufacturing Company, Decatur, Ill. Filed Feb. 7, 1968.

Staley

DAY-ONE

Owner of Reg. Nos. 670,988 and 786,115.
For Iron, Antibiotic and Vitamin Supplement for Baby Pigs (Int. Cl. 5).
First use June 19, 1967.

SN 290,989. American Home Products Corporation, New York, N.Y. Filed Feb. 14, 1968.

BEEFOGETTI

Owner of Reg. Nos. 771,565 and 836,389.
For Canned Combination of Pasta, Beef and Sauce (Int. Cl. 29).
First use Dec. 29, 1967.

SN 292,744. National Dairy Products Corporation, New York, N.Y. Filed Mar. 8, 1968.

VALLEY FARMS

For Baked Dough Products, to wit, Bread (Int. Cl. 30).
First use Sept. 25, 1967.

SN 292,746. Ocoma Foods Company, d.b.a. Hayden House Foods Co., Omaha, Nebr. Filed Mar. 8, 1968.

VALLEY RANCH

For Fresh Dressed Turkeys (Int. Cl. 29).
First use Jan. 1, 1957.

SN 292,821. Sternco Industries, Inc., Harrison, N.J. Filed Mar. 8, 1968.

DOG CHOP

The word "Dog" is disclaimed apart from the mark as shown.
For Dog Food (Int. Cl. 31).
First use Nov. 20, 1967.

SN 292,826. Swift & Company, Chicago, Ill. Filed Mar. 8, 1968.

TRU TENDR

For Beef Liver (Int. Cl. 29).
First use on or about May 1, 1964.

SN 293,880. Artie's Food Products, Inc., Indianapolis, Ind. Filed Mar. 22, 1968.

TATER TOWN

The term "Tater" is disclaimed apart from the mark as shown.
For Potato Chips (Int. Cl. 29).
First use Dec. 12, 1967.

SN 294,554. Thomas J. Lipton, Inc., Englewood Cliffs, N.J. Filed Apr. 1, 1968.

HAM CHEDDARTON

The word "Ham" is disclaimed.
For Dehydrated Prepared Dinner Product, the Principal Components of Which Are Ham, Noodles, Sauce, and Lesser Ingredients (Int. Cl. 29).
First use Mar. 4, 1968.

SN 297,138. General Mills, Inc., Minneapolis, Minn. Filed May 2, 1968.

FLATS

For Cereal Derived Ready To Eat Snack (Int. Cl. 30).
First use on or prior to Dec. 5, 1967.

SN 297,253. General Mills, Inc., Minneapolis, Minn. Filed May 3, 1968.

OPEN RANGE

For Ready To Eat Breakfast Cereal (Int. Cl. 30).
First use on or prior to July 3, 1967.

SN 297,255. General Mills, Inc., Minneapolis, Minn. Filed May 3, 1968.

SHUCKS

For Ready To Eat Breakfast Cereal (Int. Cl. 30).
First use on or prior to July 3, 1967.

SN 297,256. General Mills, Inc., Minneapolis, Minn. Filed May 3, 1968.

CREMAGIC

For Non-Dairy Cream Substitute for Use in Coffee, on Breakfast Cereals, and in or on Related Goods (Int. Cl. 29).
First use on or prior to Feb. 16, 1968.

Class 48 — Malt Beverages and Liquors

SN 273,537. Standard Rochester Brewing Co., Inc., Rochester, N.Y. Filed June 9, 1967.

Steinbräu

For Beer (Int. Cl. 32).
First use May 25, 1961.
Subj. to Int. with SN 255,477.

SN 288,706. Miller Brewing Company, Milwaukee, Wis. Filed Jan. 12, 1968.

Owner of Reg. Nos. 305,854, 614,062, and others.
For Beer (Int. Cl. 32).
First use Oct. 9, 1967.

Class 49 — Distilled Alcoholic Liquors

SN 282,936. Standard Brands Incorporated, New York, N.Y. Filed Oct. 19, 1967.

ROAD RUNNER

For Whiskey (Int. Cl. 33).
First use Sept. 28, 1967.

SN 292,999. Continental Distilling Corporation, Philadelphia, Pa. Filed Mar. 12, 1968.

HOPSCOTCH

For Scotch Whisky (Int. Cl. 33).
First use at least as early as Mar. 6, 1968.

SN 295,282. Angostura Bitters (Dr. J. G. B. Siegert & Sons) Limited, Port-of-Spain, Trinidad, West Indies. Filed Apr. 10, 1968.

OLD OAK RUM

Applicant disclaims the word "Rum" apart from the mark as shown. Owner of Trinidadian Reg. No. 603, dated Apr. 12, 1959.
For Rum (Int. Cl. 33).

Class 50 — Merchandise Not Otherwise Classified

SN 265,972. The Borden Company, New York, N.Y. Filed Mar. 6, 1967.

CLING-FOIL

Owner of Reg. No. 692,535.
For Tempered Aluminum Decorative or Non-Decorative Film With Pressure-Sensitive Backing (Int. Cl. 2).
First use Oct. 12, 1966.

Class 51 — Cosmetics and Toilet Preparations

SN 272,157. Lucille Bouchard Salon, Inc., New York, N.Y. Filed May 23, 1967.

Lucille Bouchard

"Lucille Bouchard" is the name of the president of applicant corporation.
For Perfumes, Lipstick, Bath Oils Used for the Body, Skin Creams, Face Oils, Body and Face Waxes, Personal and Body Liquid Cleansers, Skin Fresheners, Astringents, Body or Personal Deodorants, Colognes, Makeup Powder, Eye Cream, Hair Spray, Hand and Body Lotions, Skin and Face Powder, Lip Liner With Lip Brush, Rouge, Brush-On Eyebrows With Eyebrow Brushes, Eyebrow Pencils, Eyeliner, Eye Shadow, Mascara, and Liquid for Hiding Skin Blemishes (Int. Cls. 3 and 5).
First use 1961.

SN 276,115. Farah Manufacturing Company, Inc., d.b.a. Farah Industries, El Paso, Tex. Filed July 17, 1967.

FREND

For Non-Caloric Wafer for Sweetening the Breath (Int. Cl. 3).
First use June 5, 1967.

SN 290,928. Ana Maria, Inc., Beverly Hills, Calif. Filed Feb. 13, 1968.

Ana Maria

The name "Ana Maria" does not identify a living person.
For Facial Cleaning, Toning and Moisturizing Creams (Int. Cl. 3).
First use on or about Apr. 27, 1967.

SN 295,878. Carter-Wallace, Inc., New York, N.Y. Filed Apr. 18, 1968.

CHEMHOT

For Shave Preparation (Int. Cl. 3).
First use Mar. 21, 1968.

SN 295,879. Carter-Wallace, Inc., New York, N.Y. Filed Apr. 18, 1968.

WHITE HEAT

For Shave Preparation (Int. Cl. 3).
First use Mar. 21, 1968.

Class 52 — Detergents and Soaps

SN 252,092. General Five Star Products, Inc., Maitland, Fla. Filed Aug. 10, 1966.

The mark is lined for the colors red and blue. The words "Products, Inc." and "General Offices—Winter Park, Fla." are disclaimed apart from the mark as shown.
For Drainpipe Cleaner and Degreaser (Int. Cl. 3).
First use June 3, 1966.

SN 264,321. Hydrometals, Inc., d.b.a. G.C. Electronics Company, Rockford, Ill. Filed Feb. 9, 1967.

audioTex

For Tape Head Cleaning Liquid for Auto Tape Cartridge Players; Anti-Static Cleaning Fluid for Use on Phonograph Records; Anti-Static Silicone Liquid Compound for Cleaning, Lubricating and Destaticizing Phonograph Records; Liquid Cleaner and Lubricant for Tape Recorder Heads; and Tape Recorder Head Cleaning Compound (Int. Cl. 3).
First use July 19, 1959.

SN 270,231. Clayton Manufacturing Company, El Monte, Calif. Filed Apr. 28, 1967.

Clayton

Owner of Reg. Nos. 525,535, 526,153, and 825,698.
For Steam Cleaning Compounds (Int. Cl. 1).
First use January 1953.

SN 271,667. Winters Chemical Laboratories, Inc., Reading, Pa. Filed May 16, 1967.

KLEER-O-FOG

For Cleaning Solution for Eyeglasses (Int. Cl. 3).
First use February 1941.

SN 271,743. Woodland Chemical & Paper Corporation, Mineola, N.Y. Filed May 17, 1967.

FORMULA "OOTW"

The word "Formula" is disclaimed apart from the mark as shown, without disclaiming any common law rights therein.
For Industrial Cleaner and Degreaser (Int. Cl. 1).
First use Feb. 17, 1967.

SN 279,717. Colgate-Palmolive Company, New York, N.Y. Filed Sept. 6, 1967.

RESPOND

Owner of Reg. Nos. 800,504, 834,422, and others.
For Toilet Soap (Int. Cl. 3).
First use July 11, 1967.

SN 281,670. Avon Products, Inc., New York, N.Y. Filed Oct. 3, 1967.

BANGALORE

For Toilet Soap (Int. Cl. 3).
First use Sept. 18, 1967.

SN 281,673. Avon Products, Inc., New York, N.Y. Filed Oct. 3, 1967.

STEEPLECHASE

For Toilet Soap (Int. Cl. 3).
First use Sept. 18, 1967.

SN 281,675. Avon Products, Inc., New York, N.Y. Filed Oct. 3, 1967.

ON VIEW

For Toilet Soap (Int. Cl. 3).
First use Sept. 18, 1967.

SN 284,358. Geigy Chemical Corporation, Ardsley, N.Y. Filed Nov. 8, 1967.

OMNOSOL

Owner of Reg. Nos. 523,825 and 530,804.
For Fat-Dispersing Detergents Used in the Textile, Leather, and Paper Industries (Int. Cl. 1).
First use Oct. 26, 1967.

SN 286,092. Chemfil Miles Chemical and Filter Company, Inc., Troy, Mich. Filed Dec. 4, 1967.

CHEMSHEEN

For Car Washing and Cleaning Composition (Int. Cl. 3).
First use Oct. 4, 1967.

SN 286,095. Chromex Chemical Corp., Brooklyn, N.Y. Filed Dec. 4, 1967.

PROPALON

For Hand Cleaner (Int. Cl. 3).
First use Nov. 17, 1967.

SERVICE MARKS

Class 100 — Miscellaneous

SN 234,630. Der Wienerschnitzel International, Inc., Long Beach, Calif. Filed Dec. 15, 1965.

DER WIENERSCHNITZEL

For Restaurant Services and Consulting and Advisory Services to Restaurant Operators (Int. Cl. 42).
First use in or about June 1961.

SN 250,537. Thrift Drug Company of Pennsylvania, Pittsburgh, Pa. Filed July 18, 1966.

THRIFT DRUG

Applicant claims no exclusive rights in the word "Drug" or the representation of the mortar and pestle, apart from the mark as shown.
For Pharmaceutical Prescription Services (Int. Cl. 42).
First use on or prior to Aug. 25, 1961.
Subj. to Intf. with SN 251,825.

SN 275,803. Wed Enterprises, Inc., Glendale, Calif. Filed July 11, 1967.

IMAGINEERING

For Design, Architectural, and Engineering Services Rendered in Preparing Entertainment Exhibits and Displays (Int. Cl. 42).
First use about Apr. 1, 1962.

SN 276,798. American Professional Salesmen's Association, Incorporated, Dallas, Tex. Filed July 26, 1967.

PROFESSIONALYSIS

For Service Wherein Applicant Tests, Analyzes, and Evaluates Professional Salesmen, Executives, and Management Personnel, Then Places Them in Positions With Companies for Which They Have Shown To Be Qualified (Int. Cl. 42).
First use May 1, 1967.

SN 279,539. Edward S. Corey, d.b.a. Fuzzy's Hobo Cafe and Drive-In, Alexandria, La. Filed Sept. 1, 1967.

FUZZY'S HOBO CAFE

No claim is made to the word "Cafe" apart from the mark as shown.
For Restaurant Services (Int. Cl. 42).
First use in 1952.

SN 283,459. Restaurant Voisin, Inc., New York, N.Y. Filed Oct. 26, 1967.

VOISIN

The word "Voisin" is French and may be translated into English as "neighbor."
For Restaurant Services (Int. Cl. 42).
First use Jan. 10, 1935.

SN 284,236. Pioneer Girls, Wheaton, Ill. Filed Nov. 6, 1967.

PIONEER GIRLS

The word "Girls" is disclaimed apart from the mark as shown.
For Organizing Subordinate Groups in an International Christian Scouting Organization for Girls, Maintaining Membership Therein and Providing Personal Assistance, Literature and Materials Required To Carry on the Program Thereof (Int. Cl. 42).
First use 1942.

Class 101 — Advertising and Business

SN 255,981. Hipodromo de Tijuana, Tijuana, Baja California, Mexico. Filed Oct. 7, 1966.

5-10

For Providing Information Regarding Race Track Wagering, Hotel and Motel Recommendation and Clubhouse Reservations for Horse Racing Fans Traveling Between the United States and Mexico for Accommodations in the Latter Country (Int. Cl. 35).
First use Apr. 15, 1956; in commerce Apr. 15, 1956.

SN 268,402. Gittelman's Sons, Inc., Philadelphia, Pa. Filed Apr. 5, 1967.

MINKO

For Promotional Services for Increasing Retail Sales by the Use of Game Cards and Awards (Int. Cl. 35).
First use Mar. 7, 1967.

SN 270,841. V. T. Mancusi, Inc., Jamaica, N.Y. Filed May 8, 1967.

"TIME IS AN ELEMENT OF PROFIT"

For Customs House Brokerage Consisting of Acting as Agent for Payment of Customs Duties on Goods Shipped or Received by Foreign or Domestic Shippers and Receivers (Int. Cl. 35).
First use May 1, 1955.

SN 272,798. Beau-Mondé Ltd., Overland Park, Kans. Filed June 1, 1967.

Beau-Mondé

The words "Beau-Mondé" mean "beautiful world" in English.
For Arranging for Discounts on Purchases Made by Members at Participating Stores, Said Discounts Being Deposited in the Appropriate Bank by the Store to the Credit of the Members' Savings Account (Int. Cl. 35).
First use Mar. 25, 1967.

SN 281,867. Computer Time Share, Inc., Dallas, Tex. Filed Oct. 5, 1967.

CTS

For Furnishing Time on Computers, and Writing Computer Programs for Customers (Int. Cl. 35).
First use on or about June 1, 1967.

SN 281,952. Austin Auctions, Inc., Fort Collins, Colo. Filed Oct. 6, 1967.

AAA

Without waiving applicant's common-law rights with respect to color, the drawing is in part lined for red, but color is not claimed herein as a feature of the mark.
For Auctioneering (Int. Cl. 35).
First use Sept. 23, 1967.

SN 282,757. Agricultural Insight, Inc., Des Moines, Iowa. Filed Oct. 18, 1967.

AGRICULTURAL INSIGHT

Without waiving its common law rights, and for purposes of registration only, applicant disclaims exclusive rights to the word "Agricultural."
For Conducting Market, Opinion, and Readership Studies in Agriculture for Business and Industry (Int. Cl. 35).
First use May 26, 1967.

SN 297,331. Automated Systems International, Ltd., Detroit, Mich. Filed May 8, 1968.

ASI

Owner of Reg. No. 703,979.
For Accounting and Inventory Data Processing Services Rendered by Use of Computers (Int. Cl. 35).
First use 1959.

Class 102 — Insurance and Financial

SN 261,714. California Bankcard Association, San Francisco, Calif. Filed Dec. 30, 1966.

MASTER CHARGE

For Operation of System Involving the Extension of Credit by Subscribing Banks to Customers of Those Banks Who Purchase at Subscribing Establishments, Performance of a Clearing House Operation, Providing to the Subscribing Establishments and Banks Credit Information Concerning the Customers of These Banks, and Advertising Services Relative Thereto (Int. Cl. 36).
First use Dec. 27, 1966.
Subj. to Intf. with SN 267,050.

SN 264,437. The National Bank of Commerce in New Orleans, New Orleans, La. Filed Feb. 10, 1967.

PAY-YOURSELF-FIRST

For Savings Account Services (Int. Cl. 36).
First use Jan. 3, 1967.
Subj. to Intf. with SN 263,203.

SN 267,050. First National Bank of Louisville, Louisville, Ky., by assignment and change of name from Master Charge System, Inc., Louisville, Ky. Filed Mar. 17, 1967.

MASTER CHARGE

For Extending Credit to Applicant-Certified Customers, Who Purchase From Participating Business Establishments, and for Making Collections From Such Customers Through a Central Billing System (Int. Cl. 36).
First use Dec. 9, 1964.
Subj. to Intf. with SN 261,714 and SN 262,020.

SN 272,290. The Marquette National Bank of Minneapolis, d.b.a. Marquette National Bank, Minneapolis, Minn. Filed May 24, 1967.

For Complete Banking Services (Int. Cl. 36).
First use Mar. 1, 1966.

SN 285,534. Exchange National Bank of Chicago, Chicago, Ill. Filed Nov. 24, 1967.

For Banking Services (Int. Cl. 36).
First use on or about Sept. 25, 1967.

SN 285,535. Exchange National Bank of Chicago, Chicago, Ill. Filed Nov. 24, 1967.

The drawing is lined to represent the mark as it is actually used and not for the purpose of indicating color.
For Banking Services (Int. Cl. 36).
First use on or about Sept. 25, 1967.

SN 293,075. Berkshire Life Insurance Company, Pittsfield, Mass. Filed Mar. 13, 1968.

Berkshire Life

The word "Life" is disclaimed apart from the mark as shown.
For Providing Life, Disability, Medical, and Hospital Insurance (Int. Cl. 36).
First use May 3, 1855.

SN 293,076. Berkshire Life Insurance Company, Pittsfield, Mass. Filed Mar. 13, 1968.

Berkshire Life

The word "Life" is disclaimed apart from the mark as shown.
For Providing Life, Disability, Medical, and Hospital Insurance (Int. Cl. 36).
First use Dec. 18, 1967.

SN 293,087. Insurance Company of North America, Philadelphia, Pa. Filed Mar. 13, 1968.

INA Life

No exclusive claim is made to the word "Life" apart from the mark as shown. Owner of Reg. Nos. 713,296, 810,270, and others.
For Underwriting of Insurance—Namely, Life, Accident, and Health Insurance (Int. Cl. 36).
First use October 1963.

Class 103 — Construction and Repair

SN 229,707. Interstate Engineering Corporation, Anaheim, Calif. Filed Oct. 11, 1965.

iec

For Installation, Operation and Maintenance of Vacuum Cleaning Apparatus, Electrical and Sound Equipment, Vehicle Trailers and Parts, and Custom Die Casting (Int. Cl. 37).
First use Jan. 1, 1960.

SN 273,968. MacClean Service Co. Inc., Bellerose, N.Y. Filed June 15, 1967.

For Building Maintenance Services (Int. Cl. 37).
First use Apr. 15, 1965.

SN 273,969. MacClean Service Co. Inc., Bellerose, N.Y. Filed June 15, 1967.

For Building Maintenance Services (Int. Cl. 37).
First use Jan. 1, 1967.

Class 104 — Communication

SN 282,843. United Utilities, Incorporated, Westwood, Kans. Filed Oct. 18, 1967.

UNITED TELEPHONE SYSTEM

The words "Telephone System" are disclaimed apart from the mark as a whole. Owner of Reg. No. 621,463.
For Providing Telephone Communication Services (Int. Cl. 38).
First use on or about Jan. 12, 1964.

Class 105 — Transportation and Storage

SN 272,230. Universal Carloading and Distributing Co., New York, N.Y. Filed May 23, 1967.

THRUTAINER

For Freight Forwarding Services (Int. Cl. 39).
First use in or about March 1967.

SN 272,807. Carop-Verenigde Europese Autoverhuurbedrijven N.V., Amsterdam, Netherlands. Filed June 1, 1967.

CAROP

For Rental Car Service (Int. Cl. 39).
First use Oct. 18, 1966; in commerce Mar. 28, 1967.

SN 279,462. Dixie Ohio Express, Inc., Akron, Ohio. Filed Aug. 31, 1967.

DOX

For Motor Freight Services (Int. Cl. 39).
First use July 15, 1936.

SN 280,188. Universal Carloading and Distributing Company, New York, N.Y. Filed Sept. 12, 1967.

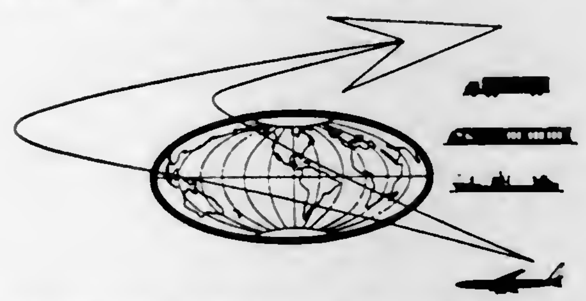

For Transportation of the Goods of Others by Air Carrier, Motor Vehicle, Railroad, and Water Carrier (Int. Cl. 39).
First use April 1959.

SN 281,191. Hall Drive-It-Yourself Company, St. Louis, Mo. Filed Sept. 26, 1967.

HAUL WITH HALL

For Rental and Leasing of Automobiles, Trucks, and Trailers (Int. Cl. 39).
First use Aug. 7, 1961.

Class 106 — Material Treatment

SN 258,557. L'Aluminium Francais, Paris, France. Filed Nov. 14, 1966.

EUROCOLOR

Owner of French Reg. No. 704,910, dated Oct. 21, 1965.
For Treatment of Materials, More Particularly, Treatment of the Surface of Aluminum and Aluminum Alloys by Anodization and/or Coloring Done to the Specification of Others and the Process for Carrying Out Said Treatment (Int. Cl. 40).

SN 279,426. Union Carbide Corporation, New York, N.Y. Filed Aug. 30, 1967.

UNION CARBIDE

Owner of Reg. Nos. 665,250, 837,135, and others.
For Applying Metal and Ceramic Coating to Various Substrates (Int. Cl. 40).
First use on or about May 31, 1964.

Class 107 — Education and Entertainment

SN 276,638. Lloyd Burke Bronston, d.b.a. Personalysis, Overland Park, Kans. Filed July 24, 1967.

For Guidance in Self-Improvement and Personality Enrichment (Int. Cl. 41).
First use July 19, 1967.

SN 280,461. Puget Sound Enterprises, Inc., Seattle, Wash. Filed Sept. 15, 1967.

RANGERS

For Entertainment Services Involving Football Exhibitions (Int. Cl. 41).
First use Aug. 26, 1967.

SN 285,688. Harold Warp, d.b.a. Pioneer Village, Minden, Nebr. Filed Nov. 27, 1967.

PIONEER VILLAGE

Owner of Reg. Nos. 632,173, 651,775, and others.
For Collecting, Perserving and Displaying of Buildings, Objects and Documents of Historical Interest, and Disseminating Knowledge Relative Thereto and Relative to Historical Facts and Events (Int. Cl. 41).
First use September 1950.

COLLECTIVE MEMBERSHIP MARKS

Class 200

SN 262,815. Subud International Services, Inc., New York, N.Y. Filed Jan. 18, 1967.

For Indicating Membership in Applicant.
First use August 1963.

TRADEMARK REGISTRATIONS ISSUED

PRINCIPAL REGISTER

Class 1 — Raw or Partly Prepared Materials

853,891. FIBERFLAKE. Hume Corporation. SN 244,947. Pub. 5-21-68. Filed 5-5-66.

853,892. BUDD AND DESIGN. The Budd Company. SN 245,382. Pub. 5-21-68. Filed 5-11-66.

853,893. BACK YARD. Better Turf Seed Company, Inc. SN 258,775. Pub. 5-21-68. Filed 11-16-66.

853,894. THERM-L. Shell Oil Company. SN 264,976. Pub. 5-21-68. Filed 2-17-67.

853,895. SEIBERLING. The Firestone Tire & Rubber Company. SN 266,214. Pub. 5-21-68. Filed 3-8-67.

853,896. J & P. Jackson & Perkins Company. MULTIPLE CLASS (Classes 1, 6, and 10). SN 268,840. Pub. 5-21-68. Filed 4-11-67.

853,897. JACKSON & PERKINS. Jackson & Perkins Company. MULTIPLE CLASS (Classes 1, 6, and 10). SN 268,841. Pub. 5-21-68. Filed 4-11-67.

853,898. VULTAFOAM. General Latex and Chemical Corporation. SN 270,125. Pub. 5-21-68. Filed 4-27-67.

853,899. STABS. Rexall Drug and Chemical Company, d.b.a. Rexall Chemical Company. SN 273,793. Pub. 5-21-68. Filed 6-13-67.

853,900. CASTOCURE. Isocyanate Products, Inc. SN 274,524. Pub. 5-21-68. Filed 6-22-67.

853,901. PADLOC. Reichhold Chemicals, Inc. SN 274,543. Pub. 5-21-68. Filed 6-22-67.

853,902. PHOENIX. Bates Manufacturing Company, Incorporated. SN 274,582. Pub. 5-21-68. Filed 6-23-67.

853,903. MISCELLANEOUS DESIGN. Bates Manufacturing Company, Incorporated. SN 274,583. Pub. 5-21-68. Filed 6-23-67.

853,904. TROLITAN. Dynamit Nobel Aktiengesellschaft. SN 274,597. Pub. 5-21-68. Filed 6-23-67.

Class 2 — Receptacles

853,905. PLAST-I-LINER. The Greif Bros. Cooperage Corporation. SN 251,537. Pub. 5-21-68. Filed 8-2-66.

853,906. REYNOLDS. Reynolds Metals Company. SN 253,052. Pub. 5-21-68. Filed 8-24-66.

853,907. PACK KING AND DESIGN. Packing Materials Corporation. MULTIPLE CLASS (Classes 2 and 37). SN 256,371. Pub. 5-21-68. Filed 10-13-66.

853,908. RJ AND DESIGN. Reed-Joseph Company. MULTIPLE CLASS (Classes 2, 100, and 103). SN 258,722. Pub. 5-21-68. Filed 11-15-66.

853,909. CANGARD. Mobil Oil Corporation. SN 261,667. Pub. 5-21-68. Filed 12-29-66.

853,910. GUILD FOAM. Sweetheart Plastics, Inc. SN 272,757. Pub. 5-21-68. Filed 5-31-67.

853,911. QUANTI-PAK AND DESIGN. Masury-Columbia Company. SN 276,332. Pub. 5-21-68. Filed 7-19-67.

853,912. NORCO. The Greif Bros. Cooperage Corporation. SN 279,190. Pub. 5-21-68. Filed 8-28-67.

853,913. MARTIN MARIETTA. Martin Marietta Corporation. SN 280,320. Pub. 5-21-68. Filed 9-14-67.

853,914. MARIETTA. Martin Marietta Corporation. SN 280,322. Pub. 5-21-68. Filed 9-14-67.

853,915. HYGEIA-PAKS. Maryland Cup Corporation. SN 281,092. Pub. 5-21-68. Filed 9-25-67.

853,916. FIXIT. G. B. Lewis Company. SN 283,016. Pub. 5-21-68. Filed 10-20-67.

853,917. PLANS-A-PARTY. Hallmark Cards, Incorporated. SN 283,125. Pub. 5-21-68. Filed 10-23-67.

853,918. PERMACLEAN. Brookpark-Royalon, Inc. SN 283,618. Pub. 5-21-68. Filed 10-30-67.

853,919. E-Z IN E-Z OUT. Gulf States Paper Corporation. SN 284,192. Pub. 5-21-68. Filed 11-6-67.

853,920. MENU WARE. American Can Company. SN 284,566. Pub. 5-21-68. Filed 11-13-67.

853,921. V-GRID. Nutter Engineering Company. SN 289,457. Pub. 5-21-68. Filed 1-24-68.

Class 3 — Baggage, Animal Equipments, Portfolios, and Pocketbooks

853,922. DANBURY. Gem-Dandy, Inc. SN 214,258. Pub. 5-21-68. Filed 3-16-65.

853,923. VOGUE OF CALIFORNIA. Continental-Vogue Luggage Co. SN 273,043. Pub. 5-21-68. Filed 6-5-67.

853,924. FRAME-A-RAMA. Sirco Products Company, Inc. SN 277,937. Pub. 5-21-68. Filed 8-9-67.

Class 4 — Abrasives and Polishing Materials

853,925. METACLAD. United States Diamond Wheel Co. SN 271,739. Pub. 5-21-68. Filed 5-17-67.

853,926. WAXIE SPRA-SHINE AND DESIGN. Strobel Products Company, Incorporated. SN 281,403. Pub. 5-21-68. Filed 9-28-67.

853,927. BRIGHT IDEA. Armour and Company. SN 288,585. Pub. 5-21-68. Filed 1-11-68.

Class 5 — Adhesives

853,928. STEVENS S CHEMICALS AND DESIGN. J. P. Stevens & Co., Inc. MULTIPLE CLASS (Classes 5 and 6). SN 238,124. Pub. 5-21-68. Filed 2-4-66.

853,929. TIXO RAPID. Tiox-Tinten- und Klebstoffwerk Gesellschaft m.b.H. SN 247,749. Pub. 5-21-68. Filed 5-17-66.

853,930. TPC (DESIGN). Thermoplastics Corporation. MULTIPLE CLASS (Classes 5 and 13). SN 276,059. Pub. 5-21-68. Filed 7-17-67.

853,931. NOPCOBOND. Diamond Shamrock Corporation, d.b.a. Nopco Chemical Company. SN 291,662. Pub. 5-21-68. Filed 2-23-68.

853,932. FAREA. The Quaker Oats Company. SN 291,953. Pub. 5-21-68. Filed 2-27-68.

Class 6 — Chemicals and Chemical Compositions

853,896. (See Class 1 for this trademark.)

853,897. (See Class 1 for this trademark.)

853,928. (See Class 5 for this trademark.)

853,933. FIX-PAK. United States Avlex Company. MULTIPLE CLASS (Classes 6, 15 and 52). SN 252,140. Pub. 5-21-68. Filed 8-10-66.

853,934. BISON CORPORATION AND DESIGN. Bison Corporation. SN 253,625. Pub. 5-21-68. Filed 9-1-66.

853,935. CAPTIFF. International Flavors & Fragrances Inc. MULTIPLE CLASS (Classes 6, 46, and 51). SN 258,272. Pub. 5-21-68. Filed 11-9-66.

853,936. BEACON. Texize Chemicals, Inc. SN 259,188. Pub. 5-21-68. Filed 11-21-66.

853,937. OMNI TECH. Omni Tech, Inc. SN 262,964. Pub. 5-21-68. Filed 1-20-67.

853,938. COP-R-GUARD. Calgon Corporation (Delaware corporation), assignee of Calgon Corporation (Pennsylvania corporation). SN 265,790. Pub. 5-21-68. Filed 3-2-67.

853,939. SAVED. Calgon Corporation (Delaware corporation), assignee of Calgon Corporation (Pennsylvania corporation). SN 267,607. Pub. 5-21-68. Filed 3-27-67.

853,940. CEMENTROL. Allied Compositions Co., Inc. SN 270,865. Pub. 5-21-68. Filed 5-8-67.

853,941. MISCELLANEOUS DESIGN. Ralston Purina Company. SN 272,307. Pub. 5-21-68. Filed 5-24-67.

853,942. KONIFIRAN. Universal Oil Products Company. SN 273,340. Pub. 5-21-68. Filed 6-8-67.

853,943. KETOFIROL. Universal Oil Products Company. SN 273,341. Pub. 5-21-68. Filed 6-8-67.

853,944. F E R R U X. Foseco International Limited. SN 275,015. Pub. 5-21-68. Filed 6-29-67.

853,945. BRAMINE. Calgon Corporation (Delaware corporation), assignee of Calgon Corporation (Pennsylvania corporation). SN 277,016. Pub. 5-21-68. Filed 7-28-67.

853,946. FL-20. Calgon Corporation (Delaware corporation), assignee of Calgon Corporation (Pennsylvania corporation). SN 277,017. Pub. 5-21-68. Filed 7-28-67.

853,947. FL-125. Calgon Corporation (Delaware corporation), assignee of Calgon Corporation (Pennsylvania corporation). SN 277,018. Pub. 5-21-68. Filed 7-28-67.

853,948. NL-100. Calgon Corporation (Delaware corporation), assignee of Calgon Corporation (Pennsylvania corporation). SN 277,019. Pub. 5-21-68. Filed 7-28-67.

853,949. NIBODUR. Farbenfabriken Bayer Aktiengesellschaft. SN 277,274. Pub. 5-21-68. Filed 8-1-67.

853,950. DEGELL. Sterwin Chemicals Inc. SN 277,310. Pub. 5-21-68. Filed 8-1-67.

853,951. CASSULFON. Son-Tex Chemical Company Incorporated. SN 277,482. Pub. 5-21-68. Filed 8-3-67.

853,952. MISCELLANEOUS DESIGN. Statikil, Inc. SN 277,941. Pub. 5-21-68. Filed 8-9-67.

853,953. TOSS AND DESIGN. Purex Corporation, Ltd. SN 288,262. Pub. 5-21-68. Filed 1-8-68.

Class 8 — Smokers' Articles, Not Including Tobacco Products

853,954. TITAN. Jack De Guingand (Agencies) Limited. SN 253,853. Pub. 5-21-68. Filed 9-6-66.

853,955. AMWAY. Amway Corporation. SN 277,760. Pub. 5-21-68. Filed 8-8-67.

853,956. AMWAY AND DESIGN. Amway Corporation. SN 277,761. Pub. 5-21-68. Filed 8-8-67.

Class 9 — Explosives, Firearms, Equipments, and Projectiles

853,957. TELEJET. MB Associates. SN 275,770. Pub. 5-21-68. Filed 7-11-67.

853,958. TECTO. Technical Tooling, Inc. SN 277,604. Pub. 5-21-68. Filed 8-7-67.

853,959. WEATHERCORD. Canadian Safety Fuse Company Limited. SN 278,948. Pub. 5-21-68. Filed 8-24-67.

853,960. GUN-HO. Carl Pedro and Sons, Inc. SN 279,676. Pub. 5-21-68. Filed 9-5-67.

853,961. GUN-HO AND DESIGN. Carl Pedro and Sons, Inc. SN 279,677. Pub. 5-21-68. Filed 9-5-67.

853,962. "BRONCO." Firearms International Corporation. SN 283,118. Pub. 5-21-68. Filed 10-23-67.

853,963. THIOLITE. Thiokol Chemical Corporation. SN 284,758. Pub. 5-21-68. Filed 11-13-67.

853,964. HORSE AND RIDER (DESIGN). Olin Mathieson Chemical Corporation. SN 291,122. Pub. 5-21-68. Filed 2-15-68.

Class 10 — Fertilizers

853,896. (See Class 1 for this trademark.)

853,897. (See Class 1 for this trademark.)

853,965. GOOD LAWNS MAKE GOOD NEIGHBORS. The Borden Company. SN 276,528. Pub. 5-21-68. Filed 7-21-67.

Class 12 — Construction Materials

853,966. BR AND DESIGN. Burke Rubber Company, Inc. SN 249,944. Pub. 5-21-68. Filed 7-11-66.

853,967. ANOBRONZE. Spring Hill Fuel Co., d.b.a. Aluminum Detail Products. SN 254,564. Pub. 5-21-68. Filed 9-15-66.

853,968. DURAPOX. Palmer Products Incorporated. SN 265,326. Pub. 5-21-68. Filed 2-23-67.

853,969. MASCO. California Products Corporation. SN 271,127. Pub. 5-21-68. Filed 5-10-67.

853,970. FLYLITE AND DESIGN. Nello L. Teer Company. SN 272,315. Pub. 5-21-68. Filed 5-24-67.

853,971. MASS AND DESIGN. Mason Appelt Space Structures. SN 272,330. Pub. 5-21-68. Filed 5-25-67.

853,972. NATURE UNDER GLASS. William R. Howell, d.b.a. The Cragsmoor Craftsmen. MULTIPLE CLASS (Classes 12, 34, 37, and 42). SN 274,162. Pub. 5-21-68. Filed 6-19-67.

853,973. SILVER METAL PRODUCTS CO. AND DESIGN. Douglas T. Silver, d.b.a. Silver Metal Products Co. SN 274,249. Pub. 5-21-68. Filed 6-19-67.

853,974. HANDY MART. Lochhead Distributing Co. SN 279,659. Pub. 5-21-68. Filed 9-5-67.

853,975. DIBOND. General Refractories Company. SN 279,787. Pub. 5-21-68. Filed 9-7-67.

853,976. P O R T E L O. Georgia-Pacific Corporation. SN 280,583. Pub. 5-21-68. Filed 9-18-67.

853,977. B R A S I L I A. Georgia-Pacific Corporation. SN 280,585. Pub. 5-21-68. Filed 9-18-67.

853,978. VETTE SHOP. The Vette Shop, Inc. SN 289,735. Pub. 5-21-68. Filed 1-26-68.

Class 13 — Hardware and Plumbing and Steam-Fitting Supplies

853,930. (See Class 5 for this trademark.)

853,979. AIR PRODUCTS AND DESIGN. Air Products and Chemicals, Inc. SN 246,846. Pub. 5-21-68. Filed 5-31-66.

853,980. TAKARA. Takara Company, New York, Inc. MULTIPLE CLASS (Classes 13, 32, and 44). SN 260,095. Pub. 5-21-68. Filed 12-5-66.

853,981. COLORWARE. Standard International Corporation, assignee of Club Aluminum Products Company. SN 262,401. Pub. 5-21-68. Filed 1-12-67.

853,982. ZIP IN. R. D. Werner Co., Inc. SN 263,302. Pub. 5-21-68. Filed 1-25-67.

853,983. L9. The Lamson & Sessions Co. SN 263,585. Pub. 5-21-68. Filed 1-30-67.

853,984. LS. The Lamson & Sessions Co. SN 263,586. Pub. 5-21-68. Filed 1-30-67.

853,985. ASHTON. The Ashton Valve Company. SN 264,383. Pub. 5-21-68. Filed 2-10-67.

853,986. VALVATIC. Virax. SN 265,451. Pub. 5-21-68. Filed 2-24-67.

853,987. SQUNCH JOINT. Ventura Tool Company. SN 268,803. Pub. 5-21-68. Filed 4-10-67.

853,988. REDI-KEY. Allen Electric and Equipment Company. SN 272,056. Pub. 5-21-68. Filed 5-22-67.

853,989. PET KEY. Robert P. Burleigh. SN 274,586. Pub. 5-21-68. Filed 6-23-67.

853,990. GOULD AND DESIGN. The Gould-Mersereau Company, Inc. SN 274,617. Pub. 5-21-68. Filed 6-23-67.

853,991. BENEKE. Beneke Corporation. MULTIPLE CLASS (Classes 13 and 32). SN 276,057. Pub. 5-21-68. Filed 7-17-67.

853,992. ATCOA AND DESIGN. Air Tool Corporation of America. MULTIPLE CLASS (Classes 13, 23, and 29). SN 280,743. Pub. 5-21-68. Filed 9-20-67.

853,993. RED ROCKER. Economy Engineering Company. SN 291,666. Pub. 5-21-68. Filed 2-23-68.

Class 14 — Metals and Metal Castings and Forgings

853,994. LEONITE. Nippon Kokan Kabushiki Kaisha. SN 244,516. Pub. 5-21-68. Filed 4-28-66.

853,995. EATON. Eaton Yale & Towne Inc. MULTIPLE CLASS (Classes 14, 19, 23, 31, and 34). SN 252,508. Pub. 5-21-68. Filed 8-17-66.

853,996. GLOVER. American Smelting and Refining Company. SN 264,788. Pub. 5-21-68. Filed 2-16-67.

853,997. CASANET. Trefileries Leon Bekaert, PVBA. SN 265,223. Pub. 5-21-68. Filed 2-21-67.

853,998. PANTANET. Trefileries Leon Bekaert, PVBA. SN 265,224. Pub. 5-21-68. Filed 2-21-67.

853,999. JG. Jeffrey Galion Manufacturing Company. SN 273,645. Pub. 5-21-68. Filed 6-12-67.

854,000. AE AND DESIGN. Andes Copper Mining Company. SN 275,822. Pub. 5-21-68. Filed 7-12-67.

854,001. SEMALLOY AND DESIGN. Semi-Alloys Incorporated. SN 279,104. Pub. 5-21-68. Filed 8-25-67.

854,002. LC. Clark Equipment Company, assignee of Chicago Malleable Castings Company. SN 282,544. Pub. 5-21-68. Filed 10-16-67.

Class 15 — Oils and Greases

853,933. (See Class 6 for this trademark.)

854,003. INTERNATIONAL. International Lubricant Corporation. SN 247,604. Pub. 5-21-68. Filed 6-8-66.

854,004. "TOUGH NUT." Special Oils Manufacturing Co. SN 275,311. Pub. 5-21-68. Filed 7-3-67.

Class 16 — Protective and Decorative Coatings

854,005. PARIS. Enterprise Paint Manufacturing Company. MULTIPLE CLASS (Classes 16 and 52). SN 250,258. CONCURRENT USE. Pub. 5-30-67. Filed 7-14-66.

854,006. PUREX AND DESIGN. Purex Corporation, Ltd. SN 284,554. Pub. 5-21-68. Filed 11-13-67.

Class 17 — Tobacco Products

854,007. MARLBORO AND DESIGN. Philip Morris Incorporated. SN 241,508. Pub. 5-21-68. Filed 3-21-66.

854,008. EL PIRATA. Zelick Gimelstein. SN 260,047. Pub. 5-21-68. Filed 12-5-66.

854,009. DON CRISTO TABACO SELECTO HAND MADE AND DESIGN. Montecrispi Cigar Co., Inc. SN 267,838. Pub. 5-21-68. Filed 3-29-67.

854,010. RANCHEROS. Bayuk Cigars Incorporated. SN 270,747. Pub. 5-21-68. Filed 5-5-67.

854,011. LA FLORENA. Simon Cigar Company Ltd. SN 279,108. Pub. 5-21-68. Filed 8-25-67.

854,012. TUEROS. Simon Cigar Company Ltd. SN 279,109. Pub. 5-21-68. Filed 8-25-67.

854,013. MR. B AND DESIGN. United States Tobacco Company. SN 286,217. Pub. 5-21-68. Filed 12-4-67.

854,014. DINO. General Cigar Co., Inc. SN 286,519. Pub. 5-21-68. Filed 12-8-67.

854,015. OLD DELFT AND DESIGN. Philip Morris Incorporated. SN 286,840. Pub. 5-21-68. Filed 12-13-67.

854,016. CASA LEON ETC. AND DESIGN. Casa Leon Cigar Company Inc. SN 287,145. Pub. 5-21-68. Filed 12-18-67.

854,017. OLD MILL AND DESIGN. Liggett & Myers Tobacco Company. SN 290,863. Pub. 5-21-68. Filed 2-12-68.

Class 18 — Medicines and Pharmaceutical Preparations

854,018. SIMIL-S. Carnation Company. SN 236,717. Pub, 5-21-68. Filed 1-18-66.

854,019. MISCELLANEOUS DESIGN. Schering Corporation. SN 260,966. Pub. 5-21-68. Filed 12-16-66.

854,020. TRESCILLIN. Beecham Group Limited, d.b.a. Beecham Research Laboratories. SN 261,622. Pub. 5-21-68. Filed 12-29-66.

854,021. MULTICYM. Luitpold-Werk. SN 262,595. Pub. 5-21-68. Filed 1-16-67.

854,022. ELECTROGEN-CS. Richardson-Merrell Inc. SN 273,984. Pub. 5-21-68. Filed 6-15-67.

854,023. ELECTROGEN-CSP. Richardson-Merrell Inc. SN 273,985. Pub. 5-21-68. Filed 6-15-67.

854,024. ELECTROGEN-CSN. Richardson-Merrell Inc. SN 273,986. Pub. 5-21-68. Filed 6-15-67.

854,025. JUVELON. Eisai Co., Ltd. SN 282,554. Pub. 5-21-68. Filed 10-16-67.

854,026. TRANSACT. Foster-Milburn Company. SN 291,935. Pub. 5-21-68. Filed 2-27-68.

Class 19 — Vehicles

853,995. (See Class 14 for this trademark.)

854,027. TOMOS AND DESIGN. Tomos Tovarna Motornih Vozil. MULTIPLE CLASS (Classes 19 and 23). SN 259,487. Pub. 5-21-68. Filed 11-25-66.

854,028. SPORTMASTER. Liberty Distributors. MULTIPLE CLASS (Classes 19 and 22). SN 268,744. Pub. 5-21-68. Filed 4-10-67.

854,029. ROADWAY. Riviera Manufacturing Co., Inc. SN 271,070. Pub. 5-21-68. Filed 5-9-67.

854,030. DERBY. Derby Campers Limited, Inc. SN 273,612. Pub. 5-21-68. Filed 6-12-67.

854,031. SAFE-SPEED. Autopower Corporation. SN 274,169. Pub. 5-21-68. Filed 6-19-67.

854,032. BOOMERANG (DESIGN). Rolly Tasker Sails, Inc. SN 291,687. Pub. 5-21-68. Filed 2-23-68.

Class 20 — Linoleum and Oiled Cloth

854,033. THE WONDERFUL WORLD OF CONGOLEUM-NAIRN AND DESIGN. Congoleum-Nairn Inc. SN 277,447. Pub. 5-21-68. Filed 8-3-67.

854,034. DECORENE. Storey Brothers and Company Limited. SN 278,927. Pub. 5-21-68. Filed 8-23-67.

Class 21 — Electrical Apparatus, Machines, and Supplies

854,035. NANOAMP. Chronetics, Inc. SN 187,558. Pub. 5-21-68. Filed 2-27-64.

854,036. NANOLOGIC. Chronetics, Inc. SN 187,560. Pub. 5-21-68. Filed 2-27-64.

854,037. SAV-REE-PAK. A.E.I. Corporation, assignee of Allen Electronics, Inc. MULTIPLE CLASS (Classes 21, 23, 45, 46, and 50). SN 246,014. Pub. 5-21-68. Filed 5-19-66.

854,038. PFC AND DESIGN. Henry P. Erwin, Jr., d.b.a. Precision Field Coil Co. SN 246,058. Pub. 1-2-68. Filed 5-19-66.

854,039. TAYLOR ELECTRIC AND DESIGN. Taylor Electric Mfg. Co., Limited. SN 248,374. Pub. 5-21-68. Filed 6-17-66.

854,040. ELECTROBUG. Challenger Electronics Ltd. SN 263,016. Pub. 5-21-68. Filed 1-23-67.

854,041. SCC AND DESIGN. Scientific Control Corporation. MULTIPLE CLASS (Classes 21 and 26). SN 263,294. Pub. 5-21-68. Filed 1-25-67.

854,042. SCC. Scientific Control Corporation. MULTIPLE CLASS (Classes 21 and 26). SN 264,761. Pub. 5-21-68. Filed 2-15-67.

854,043. HULDRA. Tandbergs Radiofabrikk A/S. MULTIPLE CLASS (Classes 21, 26, and 36). SN 265,662. Pub. 5-21-68. Filed 2-28-67.

854,044. THERM A SHAVE. Knapp Monarch Company. SN 265,903. Pub. 5-21-68. Filed 3-3-67.

854,045. MONOSCAN. Scientific-Atlanta, Inc. SN 276,476. Pub. 5-21-68. Filed 7-20-67.

854,046. SKEETER EATER AND DESIGN. National Chemical Company. SN 276,571. Pub. 5-21-68. Filed 7-21-67.

854,047. THE WHITE NIGHT PORTABLE CONSTRUCTION LIGHT AND DESIGN. White Night Co. SN 277,234. Pub. 5-21-68. Filed 7-31-67.

854,048. INSULTEK. International Electronic Research Corporation. SN 277,668. Pub. 5-21-68. Filed 8-7-67.

854,049. GO-GRILL. Beverly E. Williams. SN 277,815. Pub. 5-21-68. Filed 8-8-67.

854,050. MAINTENANCE MINDER. Hicklin GM Diesel, Inc. MULTIPLE CLASS (Classes 21 and 103). SN 280,909. Pub. 5-21-68. Filed 9-22-67.

854,051. ASSISTENT. Aktiebolaget Electrolux. SN 282,969. Pub. 5-21-68. Filed 10-20-67.

854,052. SEABREEZE. United Air Specialists, Inc. SN 284,974. Pub. 5-21-68. Filed 11-16-67.

854,053. ELECTRIC FLAME. Kyp-Go, Inc. SN 286,689. Pub. 5-21-68. Filed 12-11-67.

854,054. VIKAL. Vikoa, Incorporated. SN 291,566. Pub. 5-14-68. Filed 2-21-68.

Class 22 — Games, Toys, and Sporting Goods

854,028. (See Class 19 for this trademark.)

854,055. DODI. Ideal Toy Corporation. SN 223,233. Pub. 6-7-66. Filed 7-13-65.

854,056. CODE-A-COIN. Rexall Drug and Chemical Company, d.b.a. Tupperware. SN 260,081. Pub. 5-21-68. Filed 12-5-66.

854,057. TITLEHOLDER. Edwin R. Kabat, Ltd. SN 269,664. Pub. 5-21-68. Filed 4-20-67.

854,058. PARAMOUNT. Nippon Gakki Co., Ltd. SN 274,018. Pub. 5-21-68. Filed 6-2-67.

854,059. YAMAHA HI-FLEX. Nippon Gakki Co., Ltd. SN 274,020. Pub. 5-21-68. Filed 6-2-67.

854,060. S AND DESIGN. Sport-Obermeyer, Ltd. SN 276,183. Pub. 5-21-68. Filed 7-17-67.

854,061. WAGON MASTERS. Craft Master Corporation (Delaware corporation), assignee of Craft Master Corporation (Ohio corporation). SN 277,152. Pub. 5-21-68. Filed 7-31-67.

854,062. CARD'ARGENT. G & K. SN 277,920. Pub. 5-21-68. Filed 8-9-67.

854,063. CHEEP SKEET AND DESIGN. Edward J. Rahberger. SN 278,127. Pub. 5-21-68. Filed 8-11-67.

854,064. LIQUID THREAD. Lisbeth Whiting Company, Inc. SN 278,391. Pub. 5-21-68. Filed 8-16-67.

854,065. VIXEN. Fred Arbogast Company, Inc. SN 279,520. Pub. 5-21-68. Filed 9-1-67.

854,066. MUG-WUMP. Jamison, Inc. SN 280,166. Pub. 5-21-68. Filed 9-12-67.

854,067. SCHNOZZ-WUMP. Jamison, Inc. SN 280,167. Pub. 5-21-68. Filed 9-12-67.

854,068. W H I T E F A N G. Brunswick Corporation. SN 280,547. Pub. 5-21-68. Filed 9-15-67.

854,069. POTTY PEOPLE. Tanda Toys Limited. SN 281,327. Pub. 5-21-68. Filed 9-27-67.

854,070. THE DOUGHGIRL. Hazel E. Harvey. SN 284,910. Pub. 5-21-68. Filed 11-15-67.

854,071. BOUNCY BLOCKS. Kenner Products Company. SN 286,270. Pub. 5-21-68. Filed 12-5-67.

854,072. TRACY TRIKEDIDDLE. Mattel, Inc. SN 287,862. Pub. 5-21-68. Filed 1-2-68.

854,073. "THE GRIP STAYS IN 'TIL THE GLOVE WEARS OUT." Star-Grip Glove Company, Inc. SN 288,921. Pub. 5-21-68. Filed 1-16-68.

854,074. CANNON. Cannon Products, Inc. SN 291,311. Pub. 5-21-68. Filed 2-19-68.

854,075. HONEYBALL. Ideal Toy Corporation. SN 291,319. Pub. 5-21-68. Filed 2-19-68.

854,076. SUPER CITY. Ideal Toy Corporation. SN 291,320. Pub. 5-21-68. Filed 2-19-68.

854,077. SNAKE'S ALIVE! Ideal Toy Corporation. SN 291,321. Pub. 5-21-68. Filed 2-19-68.

854,078. KABOOM. Ideal Toy Corporation. SN 291,322. Pub. 5-21-68. Filed 2-19-68.

854,079. CAREFUL. Ideal Toy Corporation. SN 291,323. Pub. 5-21-68. Filed 2-19-68.

854,080. CHOP SUEY. Ideal Toy Corporation. SN 291,324. Pub. 5-21-68. Filed 2-19-68.

854,081. BABY WHISPER. Mattel, Inc. SN 291,328. Pub. 5-21-68. Filed 2-19-68.

854,082. COLD FEET. Ideal Toy Corporation. SN 291,468. Pub. 5-21-68. Filed 2-20-68.

Class 23 — Cutlery, Machinery, and Tools, and Parts Thereof

853,992. (See Class 13 for this trademark.)

853,995. (See Class 14 for this trademark.)

854,027. (See Class 19 for this trademark.)

854,037. (See Class 21 for this trademark.)

854,083. POLYGRAPH DL LEIPZIG. VEB Druckmaschinenwerke Leipzig. MULTIPLE CLASS (Classes 23 and 26). SN 230,725. Pub. 9-19-67. Filed 10-20-65.

854,084. KELGRAF. Vitramon, Incorporated. SN 240,683. Pub. 5-21-68. Filed 3-10-66.

854,085. AIR POLLUTION CONTROL, INC. AND DESIGN. Air Pollution Control, Inc. SN 245,549. Pub. 5-21-68. Filed 5-13-66.

854,086. DAYTON. Dayton Perforators Inc. SN 249,510. Pub. 5-21-68. Filed 7-5-66.

854,087. WELDUN. Weldun Tool & Engineering Company. SN 255,748. Pub. 5-21-68. Filed 9-30-66.

854,088. KING PROFILE (DESIGN). Speed King Manufacturing Company, Inc. SN 256,380. Pub. 5-21-68. Filed 10-13-66.

854,089. FAB-CON. Fab-Con Machinery Development Corp. SN 261,821. Pub. 5-21-68. Filed 1-3-67.

854,090. DISCO TWIN AND DESIGN. Morden Machines Company. SN 263,681. Pub. 5-21-68. Filed 1-31-67.

854,091. VENTURI-VAC. Murray Corporation. SN 264,436. Pub. 5-21-68. Filed 2-10-67.

854,092. IAC THE STANDARD OF SILENCE AND DESIGN. Industrial Acoustics Company, Inc. SN 264,466. Pub. 5-21-68. Filed 12-27-66.

854,093. ROTA-FLEX. The B. F. Goodrich Company. SN 265,512. Pub. 5-21-68. Filed 2-27-67.

854,094. TOLEDO AND DESIGN. Reltool Corporation. SN 267,691. Pub. 5-21-68. Filed 3-27-67.

854,095. MANSION PARK. Oneida Ltd. SN 271,277. Pub. 5-21-68. Filed 5-11-67.

854,096. DELI-CUT. E.T.M. Corporation. SN 271,456. Pub. 5-21-68. Filed 5-15-67.

854,097. MAROLF. Marolf Hygienic Equipment, Inc. SN 272,079. Pub. 5-21-68. Filed 5-22-67.

854,098. S W O R D G R I P. Wilkinson Sword Limited. SN 272,529. Pub. 5-21-68. Filed 5-26-67.

854,099. TYRONE-BERRY AND DESIGN. Tyrone Hydraulics, Inc. SN 272,645. Pub. 5-21-68. Filed 5-29-67.

854,100. RED LINE AND DESIGN. Big Bear, Inc. SN 273,594. Pub. 5-21-68. Filed 6-12-67.

854,101. METROMATIC. Rudolph N. Price. SN 273,974. Pub. 5-21-68. Filed 6-15-67.

854,102. TONDICATOR. The Cincinnati Shaper Company. SN 276,102. Pub. 5-21-68. Filed 7-17-67.

854,103. WATER SPADE. Basial B. Weir. SN 276,199. Pub. 5-21-68. Filed 7-17-67.

854,104. CARB-O-GRIP AND DESIGN. Throw-Away Grips, Inc. SN 276,782. Pub. 5-21-68. Filed 7-3-67.

854,105. THE GROOMER. Madson Manufacturing Co., Inc. SN 277,190. Pub. 5-21-68. Filed 7-31-67.

854,106. AT AND DESIGN. Lathan Manufacturing Co. SN 279,079. Pub. 5-21-68. Filed 8-25-67.

854,107. PHA AND DESIGN. Wayne J. Wilson and Leigh B. Wilson (joint owners), d.b.a. Wilson Parts Mfg. SN 280,123. Pub. 5-21-68. Filed 9-11-67.

854,108. PHC AND DESIGN. Wayne J. Wilson and Leigh B. Wilson (joint owners), d.b.a. Wilson Parts. Mfg. SN 280,124. Pub. 5-21-68. Filed 9-11-67.

854,109. FALTEX. Hagop S. Touloukian, d.b.a. Cornhill Commercial Company. SN 282,966. Pub. 5-21-68. Filed 10-20-67.

854,110. FABRIC MASTER. Western Sewing Machine Distributors, Inc. SN 284,283. Pub. 2-27-68. Filed 11-7-67.

854,111. EXACTORATE. Irl Daffin Associates, Incorporated, d.b.a. National Concrete Machinery Company. SN 288,621. Pub. 5-21-68. Filed 1-11-68.

854,112. FIFERATOR. Fifer Industries, Inc. SN 290,954. Pub. 5-21-68. Filed 2-13-68.

Class 24 — Laundry Appliances and Machines

854,113. THERM-O-COOL. W. M. Cissell Manufacturing Company, d.b.a. W. M. Cissell Manufacturing Company, Inc. SN 272,352. Pub. 5-21-68. Filed 5-25-67.

854,114. GLIDE-TEX. David Traum, Inc. SN 278,832. Pub. 5-21-68. Filed 8-22-67.

854,115. MINI-WASH. General Electric Company. SN 280,582. Pub. 5-21-68. Filed 9-18-67.

Class 25 — Locks and Safes

854,116. DIEBOLD TV AUTO TELLER II. Diebold, Incorporated. SN 249,144. Pub. 5-21-68. Filed 6-28-66.

854,117. DIEBOLD TV AUTO TELLER. Diebold, Incorporated. SN 249,145. Pub. 5-21-68. Filed 6-28-66.

Class 26 — Measuring and Scientific Appliances

854,041. (See Class 21 for this trademark.)

854,042. (See Class 21 for this trademark.)

854,043. (See Class 21 for this trademark.)

854,083. (See Class 23 for this trademark.)

854,118. NANOTIMER. Chronetics, Inc. SN 193,536. Pub. 5-21-68. Filed 5-15-64.

854,119. NANOSCANNER. Chronetics, Inc. SN 194,135. Pub. 5-21-68. Filed 5-25-64.

854,120. ARTISTIC DESIGN. N. P. Benson Optical Company, assignee of Benson Opticians, Inc. MULTIPLE CLASS (Classes 26 and 100). SN 242,529. Pub. 5-21-68. Filed 4-4-66.

854,121. CIRCLE AND TRAPEZOID (DESIGN). General Time Corporation. SN 253,307. Pub. 5-14-68. Filed 8-29-66.

854,122. CHEM/METER. Crane Co. SN 262,687. Pub. 5-21-68. Filed 1-17-67.

854,123. LAB MATE. Robert Friedman Associates, Inc. SN 265,712. Pub. 2-27-68. Filed 3-1-67.

854,124. TONOPAPER. Biotronics, Inc. SN 269,281. Pub. 5-21-68. Filed 4-17-67.

854,125. DATA DOT. Automata Corporation. MULTIPLE CLASS (Classes 26 and 38). SN 270,181. Pub. 5-21-68. Filed 4-28-67.

854,126. A U T O C O M P U T E R. Kal-Equip Company. SN 274,430. Pub. 5-21-68. Filed 6-21-67.

854,127. MAG-JET. Will Scientific, Inc. SN 276,406. Pub. 5-21-68. Filed 7-20-67.

854,128. ROCAL. Societe des Lunetiers, Temkine & Cie. SN 277,306. Pub. 5-21-68. Filed 8-1-67.

854,129. AUTOTRAY. Astec, Incorporated. SN 277,338. Pub. 5-21-68. Filed 8-2-67.

854,130. BRILLIANT. Brilliant Screen & Tripod, Inc. SN 278,270. Pub. 5-21-68. Filed 8-15-67.

854,131. INSTA-FOCUS. David P. Bushnell. SN 278,282. Pub. 5-21-68. Filed 8-15-67.

854,132. FOWLER VERDICT. A. Capp & Son Limited. SN 278,783. Pub. 5-21-68. Filed 8-22-67.

854,133. "209." Minnesota Mining and Manufacturing Company. SN 280,841. Pub. 5-21-68. Filed 9-21-67.

854,134. KUROVALITE. Textron Inc. SN 280,985. Pub. 5-21-68. Filed 9-22-67.

854,135. METAMIC. The Morgan Crucible Company Limited. SN 281,608. Pub. 5-21-68. Filed 10-2-67.

854,136. FLEXOMATIC. Pennsalt Chemicals Corporation, assignee of S. S. White Company. SN 282,845. Pub. 5-21-68. Filed 10-18-67.

854,137. TECHNIGUIDE. Pennsalt Chemicals Corporation, assignee of S. S. White Company. SN 282,846. Pub. 5-21-68. Filed 10-18-67.

854,138. TECHNIDIAL. Pennsalt Chemicals Corporation, assignee of S. S. White Company. SN 282,847. Pub. 5-21-68. Filed 10-18-67.

Class 27 — Horological Instruments

854,139. DYNAMIC. Omega Louis Brandt et Frere S.A. SN 289,059. Pub. 5-21-68. Filed 1-18-68.

Class 28 — Jewelry and Precious-Metal Ware

854,140. E AND DESIGN. Star Engraving Company. SN 267,073. Pub. 5-21-68. Filed 3-17-67.

854,141. IMAGE WEAR. Paper Impressions Incorporated. MULTIPLE CLASS (Classes 28, 39, and 50). SN 276,058. Pub. 5-21-68. Filed 7-17-67.

854,142. AMESBURY. Hamilton Watch Company. SN 281,289. Pub. 5-21-68. Filed 9-27-67.

Class 29 — Brooms, Brushes, and Dusters

853,992. (See Class 13 for this trademark.)

854,143. RONSON. Ronson Corporation. SN 271,387. Pub. 5-21-68. Filed 5-12-67.

854,144. TRAV-L-WISK. Textron, Inc., assignee of Gorham Corporation. SN 277,910. Pub. 5-21-68. Filed 8-9-67.

854,145. SPEED-DEMON. Red Devil Inc. SN 278,418. Pub. 5-21-68. Filed 8-16-67.

854,146. MIN-NI MOP. Flip-Mop, Inc. SN 278,793. Pub. 5-21-68. Filed 8-22-67.

854,147. OPTAMATIC. Sears, Roebuck and Co. SN 279,103. Pub. 5-21-68. Filed 8-25-67.

854,148. NYLFOAM. Robert I. Janssen, d.b.a. Product Development & Mfg. Co. SN 279,560. Pub. 5-21-68. Filed 9-1-67.

854,149. SHINING BEAUTY. Clairol Incorporated. SN 280,558. Pub. 5-21-68. Filed 9-18-67.

Class 31 — Filters and Refrigerators

853,995. (See Class 14 for this trademark.)

854,150. BLUE RIBBON. Tractor Supply Company. SN 264,115. Pub. 5-21-68. Filed 2-6-67.

854,151. ACIDOX. Keating of Chicago, Inc. SN 267,046. Pub. 5-21-68. Filed 3-17-67.

854,152. WORTH ITS WEIGHT IN COLD. King Refrigerator Corporation. MULTIPLE CLASS (Classes 31 and 34). SN 276,495. Pub. 5-21-68. Filed 7-21-67.

854,153. MAREMONT WINSLOW. Maremont Corporation, d.b.a. Maremont Marketing, Inc. SN 288,995. Pub. 5-21-68. Filed 1-17-68.

Class 32 — Furniture and Upholstery

853,980. (See Class 13 for this trademark.)

853,991. (See Class 13 for this trademark.)

854,154. MISTER MINIT AND DESIGN. Merchandising International S.A. SN 228,732. Pub. 5-21-68. Filed 10-16-65.

854,155. MISTER MINIT SERVICES AND DESIGN. Merchandising International S.A. MULTIPLE CLASS (Classes 32 and 50). SN 228,733. Pub. 5-21-68. Filed 10-16-65.

854,156. AMERICAN HOSPITAL SUPPLY A AND DESIGN. American Hospital Supply Corporation. SN 260,387. Pub. 5-21-68. Filed 12-9-66.

854,157. ASTRAL. National Furniture Manufacturing Co., Inc. SN 269,087. Pub. 5-21-68. Filed 4-13-67.

854,158. POLORON. Poloron Products, Inc. SN 276,863. Pub. 5-21-68. Filed 7-26-67.

854,159. COMFORT ZONE. The Gasser Chair Company, Inc. SN 280,155. Pub. 5-21-68. Filed 9-12-67.

854,160. HOSPILLOW. Dayco Corporation. SN 289,977. Pub. 5-21-68. Filed 1-31-68.

Class 34 — Heating, Lighting, and Ventilating Apparatus

853,972. (See Class 12 for this trademark.)

853,995. (See Class 14 for this trademark.)

854,152. (See Class 31 for this trademark.)

854,161. VISTA-FLAME. H. Frost & Company Limited. SN 254,997. Pub. 5-21-68. Filed 9-23-66.

854,162. TORCH AND OVAL DESIGN. The American Oil Company. SN 261,024. Pub. 5-21-68. Filed 12-19-66.

854,163. AIR BAR AND DESIGN. Sunbeam Lighting Company. SN 272,114. Pub. 5-21-68. Filed 5-22-67.

854,164. VENTURE. The Wiremold Company. SN 274,555. Pub. 5-21-68. Filed 6-22-67.

854,165. SOLAR KING AND DESIGN. The Coleman Company, Inc. SN 276,536. Pub. 5-21-68. Filed 7-21-67.

854,166. SULTANA. Troqueles y Esmaltes, S.A. SN 276,590. Pub. 5-21-68. Filed 7-21-67.

854,167. POLORON. Poloron Products, Inc. SN 276,861. Pub. 5-21-68. Filed 7-26-67.

854,168. AIR-BAR AND DESIGN. Sunbeam Lighting Company. SN 277,719. Pub. 5-21-68. Filed 8-7-67.

854,169. GREEN COLONIAL. Green Colonial, Inc. SN 292,156. Pub. 5-21-68. Filed 2-29-68.

Class 35 — Belting, Hose, Machinery Packing, and Nonmetallic Tires

854,170. LOBO. The General Tire & Rubber Company. SN 263,048. Pub. 5-21-68. Filed 1-23-67.

854,171. 790. Agway, Inc. SN 275,992. Pub. 5-21-68. Filed 7-14-67.

854,172. 890. Agway, Inc. SN 275,993. Pub. 5-21-68. Filed 7-14-67.

854,173. TRUC TRAC. The Kelly-Springfield Tire Company. SN 278,701. Pub. 5-21-68. Filed 8-21-67.

854,174. GRIP TRAC. The Kelly-Springfield Tire Company. SN 278,702. Pub. 5-21-68. Filed 8-21-67.

854,175. 1090. Agway, Inc. SN 279,158. Pub. 5-21-68. Filed 8-28-67.

854,176. SECURITY FAST FREIGHT. Security Tire and Rubber Company, Inc. SN 279,334. Pub. 5-21-68. Filed 8-29-67.

854,177. CORDOVAN WIDE '600.' Cordovan Associates, Incorporated. SN 279,376. Pub. 5-21-68. Filed 8-30-67.

854,178. MULTI-MILE WIDE '600.' Cordovan Associates, Incorporated. SN 279,377. Pub. 5-21-68. Filed 8-30-67.

854,179. JET-RIB. The General Tire & Rubber Company. SN 279,470. Pub. 5-21-68. Filed 8-31-67.

854,180. STEELFLEX. A & A Manufacturing Company, Inc. SN 279,606. Pub. 5-21-68. Filed 9-5-67.

Class 36 — Musical Instruments and Supplies

854,043. (See Class 21 for this trademark.)

854,181. POLLY AND DESIGN. J. A. Balthrop, d.b.a. Bobe Wes Music Co. SN 239,111. Pub. 5-21-68. Filed 2-18-66.

854,182. REVERENCE. Reverence Records, Inc. SN 263,608. Pub. 5-21-68. Filed 1-30-67.

854,183. PAGE ONE. Page One Records Limited. SN 264,463. Pub. 5-21-68. Filed 2-3-67.

854,184. CLINICIAN SERIES. Golden Crest Records, Inc. SN 266,224. Pub. 5-21-68. Filed 3-8-67.

854,185. SOUL CITY AND DESIGN. Liberty Records, Inc. SN 271,490. Pub. 5-21-68. Filed 5-15-67.

Class 37 — Paper and Stationery

853,907. (See Class 2 for this trademark.)

853,972. (See Class 12 for this trademark.)

854,186. SENSI COPY AND DESIGN. The Service Recorder Company. SN 272,110. Pub. 5-21-68. Filed 5-22-67.

854,187. DUPLI-MEMO. Grayarc Company, Inc. SN 273,394. Pub. 5-21-68. Filed 6-8-67.

854,188. SCHOOLTIME. Roaring Spring Blank Book Co., Inc. SN 279,095. Pub. 5-21-68. Filed 8-25-67.

854,189. COLDSTREAM. Brown Company. SN 279,267. Pub. 5-21-68. Filed 8-29-67.

854,190. EUROPHAN. Folienfabrik Forchheim G.m.b.H. SN 281,660. Pub. 5-21-68. Filed 10-2-67.

854,191. MISCELLANEOUS DESIGN. Synanon Foundation. Inc. SN 283,402. Pub. 5-21-68. Filed 10-26-67.

854,192. SYNANON. Synanon Foundation, Inc. SN 283,403. Pub. 5-21-68. Filed 10-26-67.

854,193. MAFCO AND DESIGN. MacAndrews & Forbes Company. SN 291,464. Pub. 5-21-68. Filed 2-19-68.

Class 38 — Prints and Publications

854,125. (See Class 26 for this trademark.)

854,194. GENIE GEMS AND DESIGN. Alliance Manufacturing Company, Inc., assignee of Dexter Press Inc. SN 259,816. Pub. 10-3-67. Filed 12-1-66.

854,195. TAXPOCKETS. Wiechers Enterprises, Inc. SN 265,365. Pub. 5-21-68. Filed 2-23-67.

854,196. KS AND DESIGN. Kennedy Sinclaire, Inc. SN 268,501. Pub. 5-21-68. Filed 4-6-67.

854,197. HALLMARK EDITIONS. Hallmark Cards, Incorporated. SN 268,730. Pub. 5-21-68. Filed 4-10-67.

854,198. VI. Visual Impact, Inc. SN 269,364. Pub. 5-21-68. Filed 4-17-67.

854,199. CHART-O-MATIC. Fedtro, Inc. SN 270,053. Pub. 5-21-68. Filed 4-26-67.

854,200. PRESIDENTS FORUM. The Presidents Association, Inc. SN 270,952. Pub. 5-21-68. Filed 5-8-67.

854,201. SNOW SCENES. Sherburne Corporation. SN 270,961. Pub. 5-21-68. Filed 5-8-67.

854,202. SEXTANT. Alp Publications, Inc. SN 273,243. Pub. 5-21-68. Filed 6-7-67.

854,203. ROAD & TRACK. Bond Publishing Company. SN 274,118. Pub. 5-21-68. Filed 6-16-67.

854,204. DESIGN OF A FIGURE. Magazine Management Company, d.b.a. Marvel Comics Group. SN 278,308. Pub. 5-21-68. Filed 8-15-67.

854,205. HUMANESE. Humanese Communication Council. SN 290,932. Pub. 5-21-68. Filed 2-13-68.

854,206. CHRISTMAS GALLERIES. H. S. Crocker Co., Inc., d.b.a. California Artists. SN 292,321. Pub. 5-21-68. Filed 3-4-68.

854,207. CHRISTMAS GRANDEES. H. S. Crocker Co., Inc., d.b.a. California Artists. SN 292,322. Pub. 5-21-68. Filed 3-4-68.

Class 39 — Clothing

854,141. (See Class 28 for this trademark.)

854,208. SAUCY'S BY EASY WALKER. Ideal Shoe Company, assignee of Easy Walker Shoe Company. SN 240,084. Pub. 5-21-68. Filed 3-3-66.

854,209. GLASS GRIPPER. Advance Glove Manufacturing Co. SN 249,929. Pub. 5-21-68. Filed 7-11-66.

854,210. FRED RICHARDS. Diana Stores Corporation. SN 256,830. Pub. 8-1-67. Filed 10-20-66.

854,211. BONANZA AND DESIGN. Northern Cap Company. SN 256,855. Pub. 5-21-68. Filed 10-20-66.

854,212. SQUIRREL HILL. Royal Mist Ltd. SN 262,197. Pub. 5-21-68. Filed 1-9-67.

854,213. PILLOKINS. Endicott Johnson Corporation. SN 264,204. Pub. 5-21-68. Filed 2-8-67.

854,214. SIZE-PRUF. Kayser-Roth Corporation. SN 264,833. Pub. 5-21-68. Filed 2-16-67.

854,215. JIFFY ROLL-UP. Plainfield Headwear, Inc. SN 266,357. Pub. 5-21-68. Filed 3-9-67.

854,216. CORTEFIEL AND DESIGN. Manufacturas Del Vestido S.A., assignee of Tri Sportswear, Inc. SN 267,785. Pub. 7-25-67. Filed 3-29-67.

854,217. AFFILIATED CLOTHIERS. Affiliated Clothiers, Inc. SN 268,665. Pub. 5-21-68. Filed 4-10-67.

854,218. RIEKER AND DESIGN. Rieker & Co. SN 269,137. Pub. 5-21-68. Filed 9-14-66.

854,219. BANANA BOATS. Principle Business Enterprises, Inc. SN 270,001. Pub. 5-21-68. Filed 4-25-67.

854,220. SNOW CLOTH. The Londontown Manufacturing Company. SN 272,933. Pub. 5-21-68. Filed 6-2-67.

854,221. MARK III. Superba Cravats, Inc. SN 273,125. Pub. 5-21-68. Filed 6-5-67.

854,222. BLACKER. Stanley Blacker, Inc. SN 285,635. Pub. 5-21-68. Filed 11-27-67.

854,223. SPOZADIAPER. Foremost-McKesson, Inc., d.b.a. Genetec Hospital Supply Company. SN 286,518. Pub. 5-21-68. Filed 12-8-67.

854,224. EVAN-PICONE. Evan-Picone, Inc. SN 289,017. Pub. 5-21-68. Filed 1-17-68.

854,225. CHIP 'N PUTT. Chips 'n Twigs, Inc. SN 291,547. Pub. 5-21-68. Filed 2-21-68.

854,226. TAFF-STAY. Maidenform, Inc. SN 291,552. Pub. 5-21-68. Filed 2-21-68.

854,227. PRIZE POSSESSIONS. Maidenform, Inc. SN 291,554. Pub. 5-21-68. Filed 2-21-68.

Class 40 — Fancy Goods, Furnishings, and Notions

854,228. FLENTS. Flents Products Co., Inc. SN 270,667. Pub. 5-21-68. Filed 5-4-67.

854,229. BPB. American Stay Company. SN 281,431. Pub. 5-21-68. Filed 9-29-67.

854,230. KWIK-DATE. Accro Products Co., Inc. SN 281,948. Pub. 5-21-68. Filed 10-6-67.

Class 42 — Knitted, Netted, and Textile Fabrics, and Substitutes Therefor

853,972. (See Class 12 for this trademark.)

854,231. HOME WAS NEVER LIKE THIS. Charles Bloom, Inc. SN 272,012. Pub. 5-21-68. Filed 5-22-67.

854,232. K MART AND DESIGN. S. S. Kresge Company. SN 282,102. Pub. 5-21-68. Filed 10-9-67.

854,233. SSK AND DESIGN. S. S. Kresge Company. SN 282,103. Pub. 5-21-68. Filed 10-9-67.

Class 43 — Thread and Yarn

854,234. POLKA. Filatures Prouvost Masurel & Cie, La Lainiere de Roubaix, by change of name from Filatures Prouvost & Cie, La Lainiere de Roubaix. SN 263,041. Pub. 5-21-68. Filed 1-23-67.

Class 44 — Dental, Medical, and Surgical Appliances

853,980. (See Class 13 for this trademark.)

854,235. TASSAWAY BY TASSETTE. Tassette, Inc. SN 252,038. Pub. 5-21-68. Filed 8-9-66.

854,236. COLOR-DATE. Professional Tape Co., Inc. SN 270,003. Pub. 5-21-68. Filed 4-25-67.

854,237. HI-TEMP. Professional Tape Co., Inc. SN 270,004. Pub. 5-21-68. Filed 4-25-67.

854,238. SERENE. Sheffield Laboratories, Inc. SN 271,186. Pub. 5-21-68. Filed 5-10-67.

854,239. GYRO. Union Broach Company, Inc. SN 274,103. Pub. 5-21-68. Filed 6-16-67.

854,240. TRI-POISE. Guardian Products Company, Inc. SN 274,969. Pub. 5-21-68. Filed 6-28-67.

854,241. SPIROTEL. Computer Instruments Corporation. SN 278,669. Pub. 5-21-68. Filed 8-21-67.

854,242. ECTOCOR. Cordis Corporation. SN 279,053. Pub. 5-21-68. Filed 8-25-67.

854,243. INFUSAL. Le Voy's Inc. SN 279,658. Pub. 5-21-68. Filed 9-5-67.

854,244. AFTER-PREP. Opotow Dental Manufacturing Corp. SN 281,612. Pub. 5-21-68. Filed 10-2-67.

854,245. EVAC-SAC. C. R. Bard, Inc. SN 281,678. Pub. 5-21-68. Filed 10-3-67.

854,246. CHOLANGIOCATH. Deseret Pharmaceutical Company, Inc. SN 281,779. Pub. 5-21-68. Filed 10-4-67.

854,247. 3M. Minnesota Mining and Manufacturing Company. SN 291,678. Pub. 5-21-68. Filed 2-23-68.

854,248. COBAN. Minnesota Mining and Manufacturing Company. SN 291,679. Pub. 5-21-68. Filed 2-23-68.

Class 45 — Soft Drinks and Carbonated Waters

854,037. (See Class 21 for this trademark.)

854,249. SCOTCH ROCKS. Oag Porteous & Co. Limited. SN 278,817. Pub. 5-21-68. Filed 8-22-67.

854,250. FRUICE. Castle & Cooke, Inc., d.b.a. Dole Company. SN 289,234. Pub. 5-21-68. Filed 1-22-68.

Class 46 — Foods and Ingredients of Foods

853,935. (See Class 6 for this trademark.)

854,037. (See Class 21 for this trademark.)

854,251. TREAT. East Coast Food Corp. SN 170,389. Pub. 5-21-68. Filed 6-5-63.

854,252. KING SOUR. American Whipped Products, Inc. SN 226,707. Pub. 5-21-68. Filed 8-30-65.

854,253. LETIZIA. Minetti & Cia. Ltda. Sociedad Anonima Industrial y Comercial. SN 231,695. Pub. 5-21-68. Filed 10-27-65.

854,254. VAHLSING. Vahlsing, Inc. SN 243,046. Pub. 5-21-68. Filed 4-8-66.

854,255. COOKIN' BAG. F. M. Stamper Company, d.b.a. Banquet Canning Co. SN 244,265. Pub. 5-21-68. Filed 4-25-66.

854,256. RAM. Pita Hermanos S.A. SN 252,490. Pub. 5-21-68. Filed 8-16-66.

854,257. LA AVISPA. R & S Distributors, Inc. SN 255,230. Pub. 5-21-68. Filed 9-27-66.

854,258. H QUALITY SERVED QUICKLY AND DESIGN. Huntleys of Lancaster, Inc. SN 255,982. Pub. 5-21-68. Filed 10-7-66.

854,259. MONGO MONGO. Huki Lau Corporation. SN 256,095. Pub. 5-21-68. Filed 10-10-66.

854,260. SWEET'NER AND DESIGN. Grocery Foods Corp. SN 256,548. Pub. 5-21-68. Filed 10-17-66.

854,261. CAL-MAG FORTIFIER. Horner Sales Corporation. SN 260,157. Pub. 5-21-68. Filed 12-6-66.

854,262. HAPPY TIZERS. National Dairy Products Corporation. SN 260,443. Pub. 2-27-68. Filed 12-9-66.

854,263. DONDE AND DESIGN. Productos de Harina, S.A. SN 264,240. Pub. 5-21-68. Filed 2-8-67.

854,264. CRUMPY SET. All-Crump. SN 265,478. Pub. 5-21-68. Filed 2-27-67.

854,265. MISCELLANEOUS DESIGN. Popped-Right Corn Company. SN 265,652. Pub. 5-21-68. Filed 2-28-67.

854,266. THE SWINGERS. Pierce Pre-Cooked Foods, Inc. SN 271,828. Pub. 5-21-68. Filed 5-18-67.

854,267. THE WESTERNER. Pierce Pre-Cooked Foods, Inc. SN 271,829. Pub. 5-21-68. Filed 5-18-67.

854,268. BIKINI STEAK. Pierce Pre-Cooked Foods, Inc. SN 271,832. Pub. 5-21-68. Filed 5-18-67.

854,269. HAWAIIAN EYE. Pierce Pre-Cooked Foods, Inc. SN 271,833. Pub. 5-21-68. Filed 5-18-67.

854,270. RUBY BEE AND DESIGN. Beatrice Foods Co. SN 272,565. Pub. 5-21-68. Filed 5-29-67.

854,271. SPORBAN. Food Industries Corporation. SN 273,273. Pub. 5-21-68. Filed 6-7-67.

854,272. CSM MIX. American Corn Millers' Federation. SN 275,214. COLLECTIVE MARK. Pub. 5-21-68. Filed 7-3-67.

854,273. BERTINE. Bertine Imports, Inc. SN 277,508. Pub. 5-21-68. Filed 8-4-67.

854,274. FIGURE CONTROL. Duffy-Mott Company, Inc. SN 277,640. Pub. 5-21-68. Filed 8-7-67.

854,275. ELECTRA MATIC. General Foods Corporation. SN 277,908. Pub. 5-21-68. Filed 8-9-67.

854,276. FLAVOR-CRISP. Ballantyne Instruments & Electronics, Inc. SN 278,185. Pub. 5-21-68. Filed 8-14-67.

854,277. A & P AND DESIGN. The Great Atlantic & Pacific Tea Company, Inc. SN 279,643. Pub. 5-21-68. Filed 9-5-67.

854,278. DINKY TWINKIES. Continental Baking Company. SN 280,855. Pub. 5-21-68. Filed 9-21-67.

854,279. GREEN BEAUTY. Whitfield Pickle Company. SN 280,903. Pub. 5-21-68. Filed 9-21-67.

854,280. MEDITERRANEAN. Continental Coffee Company. SN 281,970. Pub. 5-21-68. Filed 10-6-67.

854,281. COSTA. Costa Ice Cream Company. SN 282,271. Pub. 5-21-68. Filed 10-11-67.

854,282. RICHMOND. Hygrade Food Products Corporation. SN 282,373. Pub. 5-21-68. Filed 10-12-67.

854,283. . . . FROM THE FOLKS WHO CARE! Tobin Packing Co., Inc. SN 284,062. Pub. 5-21-68. Filed 11-2-67.

854,284. DOLCEFREDDO. P. Ferrero & C.S.P.A. SN 285,372. Pub. 5-21-68. Filed 11-22-67.

854,285. REVIVE. Philip Morris Incorporated, d.b.a. Flavor Tree Foods Co. SN 291,681. Pub. 5-21-68. Filed 2-23-68.

854,286. SNAP-TU. Philip Morris Incorporated, d.b.a. Flavor Tree Foods Co. SN 291,682. Pub. 5-21-68. Filed 2-23-68.

Class 47 — Wines

854,287. DAS GUTTEN. Gibson Wine Company. SN 271,932. Pub. 5-21-68. Filed 5-19-67.

854,288. SENOR. Western Grape Products. SN 277,948. Pub. 5-21-68. Filed 8-9-67.

854,289. BARRY. The Barry Wine Company, Inc. SN 288,739. Pub. 5-21-68. Filed 1-15-68.

Class 48 — Malt Beverages and Liquors

854,290. PRINZ BRAU. Prinz Bräu Carlsio S.p.A. SN 278,076. Pub. 5-21-68. Filed 8-11-67.

854,291. BECKER'S AND DESIGN. Duke Molner Wholesale Liquor Co., Inc. SN 279,176. Pub. 5-21-68. Filed 8-28-67.

Class 49 — Distilled Alcoholic Liquors

854,292. HERBSAINT. Sazerac Company, Inc., d.b.a. Legendre Co. SN 279,961. Pub. 5-21-68. Filed 9-8-67.

854,293. ENSIGN. Canadian Schenley Distilleries, Ltd. SN 282,174. Pub. 5-21-68. Filed 10-10-67.

Class 50 — Merchandise Not Otherwise Classified

854,037. (See Class 21 for this trademark.)

854,141. (See Class 28 for this trademark.)

854,155. (See Class 32 for this trademark.)

854,294. CUBED ART AND DESIGN. Foto-Cube, Inc., assignee of Ebnersons Associates. SN 245,816. Pub. 5-21-68. Filed 5-17-66.

854,295. MAGNETICS INC. AND DESIGN. Magnetics, Inc. SN 246,222. Pub. 5-21-68. Filed 5-9-66.

854,296. JET SYSTEM AND DESIGN. American Jet Spray Industries, Inc. SN 251,175. Pub. 5-21-68. Filed 7-28-66.

854,297. JETSYSTEM. American Jet Spray Industries, Inc. SN 251,176. Pub. 5-21-68. Filed 7-28-66.

854,298. LASZLO ISPANKY AND DESIGN. Utley Porcelains, Ltd. SN 276,774. Pub. 5-21-68. Filed 7-25-67.

854,299. LASZLO ISPANKY. Utley Porcelains, Ltd. SN 276,775. Pub. 5-21-68. Filed 7-25-67.

854,300. NUMB JOHN. Guido J. Tanzini, d.b.a. G-J Custom. SN 276,881. Pub. 5-21-68. Filed 7-26-67.

854,301. JEWELART. General Crafts Corporation. SN 278,962. Pub. 5-21-68. Filed 8-24-67.

854,302. GOOFLES. Mattel, Inc. SN 286,477. Pub. 5-21-68. Filed 12-8-67.

Class 51 — Cosmetics and Toilet Preparations

853,935. (See Class 6 for this trademark.)

854,303. INSTANT FACE. Yardley of London, Inc., d.b.a. Yardley. SN 244,165. Pub. 5-21-68. Filed 4-22-66.

854,304. BRAGGI. Charles Revson, Inc. SN 254,469. Pub. 5-21-68. Filed 9-14-66.

854,305. LLL ENGLISH VELVET AND DESIGN. Louis Lambert Laboratories. SN 262,043. Pub. 5-21-68. Filed 1-6-67.

854,306. THE HOUSE OF JOURDAN. Candygram, Inc. SN 265,158. Pub. 5-21-68. Filed 2-21-67.

854,307. GOLDEN ESSENCE. Clairol Incorporated. SN 265,698. Pub. 5-21-68. Filed 3-1-67.

854,308. IMPERIAL GOLD AND DESIGN. Helene Curtis Industries, Inc., d.b.a. Kings Men. SN 267,252. Pub. 5-21-68. Filed 3-21-67.

854,309. MISTY SPRAY. Yardley of London, Inc. SN 269,369. Pub. 5-21-68. Filed 4-17-67.

854,310. SOOPA STRAIGHT. Clairol Incorporated. SN 271,347. Pub. 5-21-68. Filed 5-12-67.

854,311. MAKE OVER. Clairol Incorporated. SN 271,350. Pub. 5-21-68. Filed 5-12-67.

854,312. MAKE OVER MAGIC. Clairol Incorporated. SN 271,353. Pub. 5-21-68. Filed 5-12-67.

854,313. LIP TEASER. I. Posner, Inc. SN 271,639. Pub. 5-21-68. Filed 5-16-67.

854,314. SNOW CAP. John H. Breck, Inc. SN 274,947. Pub. 5-21-68. Filed 6-28-67.

854,315. SECOND SPRING. John H. Breck, Inc. SN 274,949. Pub. 5-21-68. Filed 6-28-67.

854,316. DISPOS-A-PAD. Leon Products, Inc. SN 276,504. Pub. 5-21-68. Filed 7-21-67.

854,317. SOFT 'N LOVELY. Curley Company, Incorporated. SN 282,741. Pub. 5-21-68. Filed 10-17-67.

854,318. STING. Alberto-Culver Company. SN 287,209. Pub. 5-21-68. Filed 12-19-67.

854,319. THUMBS UP. E. R. Squibb & Sons, Inc. SN 288,036. Pub. 5-21-68. Filed 1-3-68.

854,320. PERMA BROW. Perma Brow, Inc. SN 288,472. Pub. 5-21-68. Filed 1-10-68.

854,321. BABYLON. Glenn A. Eaton, d.b.a. Parfums Duvelle. SN 289,284. Pub. 5-21-68. Filed 1-22-68.

854,322. KEEN. The Gillette Company. SN 292,051. Pub. 5-21-68. Filed 2-28-68.

Class 52 — Detergents and Soaps

853,933. (See Class 6 for this trademark.)

854,005. (See Class 16 for this trademark.)

854,323. RAMADA INN. Ramada Inns, Inc. SN 258,148. Pub. 5-21-68. Filed 11-7-66.

854,324. BUGLER (DESIGN). Ramada Inns, Inc. SN 258,150. Pub. 5-21-68. Filed 11-7-66.

854,325. VANA-TROL. Process Solvent Company, Inc., d.b.a. The Process Solvent Co., Inc. SN 265,333. Pub. 5-21-68. Filed 2-23-67.

854,326. QUATEX. Texize Chemicals, Inc. SN 266,807. Pub. 5-21-68. Filed 3-15-67.

854,327. SKON. Douglas Hogarth Limited. SN 273,195. Pub. 5-21-68. Filed 6-6-67.

854,328. BLOTZIT! AND DESIGN. International Medical Supply, Inc. SN 275,670. Pub. 5-21-68. Filed 7-10-67.

854,329. ZEP CARPET-GLO. National Service Industries, Inc. SN 278,401. Pub. 5-21-68. Filed 8-16-67.

854,330. LEMON TOUCH. John H. Breck, Inc. SN 281,355. Pub. 5-21-68. Filed 9-28-67.

854,331. SUNSHOWER. John H. Breck, Inc. SN 281,356. Pub. 5-21-68. Filed 9-28-67.

854,332. PUREX AND DESIGN. Purex Corporation, Ltd. SN 284,555. Pub. 5-21-68. Filed 11-13-67.

Service Marks

Class 100 — Miscellaneous

853,908. (See Class 2 for this trademark.)

854,120. (See Class 26 for this trademark.)

854,333. RICE COUNCIL FOR MARKET DEVELOPMENT AND DESIGN. Rice Council for Market Development. SN 238,563. Pub. 5-21-68. Filed 2-10-66.

854,334. LINSEED OIL NATURALLY GOOD FOR WOOD AND DESIGN. National Flaxseed Processors Association. SN 247,144. Pub. 5-21-68. Filed 6-2-66.

854,335. COLORTHEK. Badische Anilin- & Soda-Fabrik Aktiengesellschaft. SN 249,389. Pub. 5-21-68. Filed 7-1-66.

854,336. MISCELLANEOUS DESIGN. Brown Engineering Company, Inc. (California corporation), assignee of Brown Engineering Company, Inc. (Alabama corporation). SN 251,047. Pub. 5-21-68. Filed 7-26-66.

854,337. PERSON TO PERSON. Person-To-Person Inc. SN 256,857. Pub. 5-21-68. Filed 10-20-66.

854,338. BEEF RANCH. The Beef Ranch, Inc. SN 263,523. Pub. 5-21-68. Filed 1-30-67.

854,339. MISCELLANEOUS DESIGN. Aspen Corporation. SN 264,183. Pub. 5-21-68. Filed 2-8-67.

854,340. EL BURRITO AND DESIGN. El Burrito, Inc. SN 273,351. Pub. 5-21-68. Filed 6-8-67.

854,341. CHRISTIAN SERVICE BRIGADE. Christian Service Brigade. SN 283,622. Pub. 5-21-68. Filed 10-30-67.

854,342. THE TURFLAND ROOM. Mercantile Stores Company, Inc. SN 291,559. Pub. 5-21-68. Filed 2-21-68.

854,343. MISCELLANEOUS DESIGN. Mercantile Stores Company, Inc. SN 291,677. Pub. 5-21-68. Filed 2-23-68.

854,344. PTA. Plastic Tooling Aids Laboratory, Inc. SN 291,685. Pub. 5-21-68. Filed 2-23-68.

Class 101 — Advertising and Business

854,345. CAPITOL TITLE & ESCROW AND DESIGN. Capitol Title & Escrow Corporation. SN 243,836. Pub. 5-21-68. Filed 4-20-66.

854,346. SOWESCO. Southwest Grease & Oil Co., Inc. SN 257,522. Pub. 5-21-68. Filed 10-28-66.

854,347. INSTY PRINTS. Manette, Inc. SN 259,946. Pub. 5-21-68. Filed 12-2-66.

854,348. PX. The Army and Air Force Exchange Service. SN 261,703. Pub. 5-21-68. Filed 12-30-66.

854,349. POST EXCHANGE. The Army and Air Force Exchange Service. SN 261,704. Pub. 5-21-68. Filed 12-30-66.

854,350. DIAL-A-GIFT AND DESIGN. Dial-A-Gift Inc. SN 261,976. Pub. 5-21-68. Filed 1-5-67.

854,351. D. BERMAN & SON DB AND DESIGN. D. Berman & Son Sales Co., Inc. SN 266,500. Pub. 5-21-68. Filed 3-13-67.

854,352. CHAR'S. Char's, Inc., assignee of Cepco Development Corporation. SN 267,611. Pub. 5-21-68. Filed 3-27-67.

854,353. SAV-A-FUND. Sav-A-Fund Corporation. SN 271,644. Pub. 5-21-68. Filed 5-16-67.

854,354. MISCELLANEOUS DESIGN. Max the Printer, Inc. SN 272,452. Pub. 5-21-68. Filed 5-26-67.

854,355. BURD FLETCHER AND DESIGN. Burd & Fletcher Company. SN 272,915. Pub. 5-21-68. Filed 6-2-67.

854,356. IDEA CENTER I.A.S.I. SHOW AND DESIGN. International Automotive Service Industries Show (joint venture). SN 273,289. Pub. 5-21-68. Filed 6-7-67.

854,357. AGRIFAX. Federal Intermediate Credit Bank of St. Paul. SN 283,601. Pub. 5-21-68. Filed 10-30-67.

854,358. PATHMARK. Louket Markets Inc. SN 285,701. Pub. 5-21-68. Filed 11-28-67.

854,359. PLASTICS 100. The Society of the Plastics Industry, Inc. SN 290,454. Pub. 5-21-68. Filed 2-7-68.

Class 102 — Insurance and Financial

854,360. COMMONWEALTH AND DESIGN. Fund American Investment Management Company, by change of name from North American Securities Company. SN 244,727. Pub. 5-21-68. Filed 5-2-66.

854,361. P PRESIDENTIAL EXCHANGE FUND AND DESIGN. Federated Research Corp. SN 247,591. Pub. 5-21-68. Filed 6-8-66.

854,362. BLOCK "S" (DESIGN). The Sun Finance & Loan Company. SN 275,396. Pub. 5-21-68. Filed 7-5-67.

Class 103 — Construction and Repair

853,908. (See Class 2 for this trademark.)

854,050. (See Class 21 for this trademark.)

854,363. QUEENS-WAY AND DESIGN. American Queens-Way, Inc. SN 245,664. Pub. 5-21-68. Filed 5-16-66.

Class 105 — Transportation and Storage

854,364. THE NORTHERN LIGHTS TOUR. Sandberg Travel Bureau, Inc., d.b.a. Sandberg Travel Tours. SN 261,521. Pub. 5-21-68. Filed 12-27-66.

854,365. THE SAGA TOURS. Sandberg Travel Bureau, Inc., d.b.a. Sandberg Travel Tours. SN 261,522. Pub. 5-21-68. Filed 12-27-66.

Class 106 — Material Treatment

854,366. KOSMO KOTE. Duffens Optical Company, d.b.a. Precision Coating Service. SN 248,791. Pub. 5-21-68. Filed 6-23-66.

854,367. Z AND DESIGN. Ziebart Process Corp. SN 270,021. Pub. 5-21-68. Filed 4-25-67.

Class 107 — Education and Entertainment

854,368. MISCELLANEOUS DESIGN. Suffolk County Organization for the Promotion of Education. SN 241,386. Pub. 7-11-67. Filed 3-18-66.

854,369. SIECUS AND DESIGN. Sex Information and Education Council of the United States, Inc. SN 271,648. Pub. 5-21-68. Filed 5-16-67.

854,370. THE BOS-TONES. Marybeth Hansen. SN 272,233. Pub. 5-21-68. Filed 5-22-67.

854,371. FANS IN THE STANDS. Cassano Enterprises, Inc. SN 277,144. Pub. 5-21-68. Filed 7-31-67.

854,372. THE SECRET SOUND. Charles W. Balthrope. SN 278,574. Pub. 5-21-68. Filed 8-18-67.

Collective Membership Marks

Class 200

854,373. NATIONAL PERSONNEL CONSULTANTS. National Personnel Consultants. SN 271,952. Pub. 5-21-68. Filed 5-19-67.

854,374. NPC ETC. AND DESIGN. National Personnel Consultants. SN 271,954. Pub. 5-21-68. Filed 5-19-67.

SUPPLEMENTAL REGISTER

These registrations are not subject to opposition.

Class 12 — Construction Materials

854,375. Inland Steel Products Company, Milwaukee, Wis. SN 254,878. Filed P.R. 9-21-66; Am. S.R. 5-29-68.

STEELCOR

For Hollow Core Panels Having Metal Lath Surfaces Spaced Apart by Lightweight Trusses and Adapted To Be Covered With an Exterior and/or Interior Finish for Use as Load Bearing Units in a Construction System and Lath and Truss Components Therefor (Int. Cl. 6).

First use on or about December 1965.

Class 19 — Vehides

854,376. C-Mor Company, Rochester, N.Y. SN 260,137. Filed P.R. 12-6-66; Am. S.R. 6-3-68.

C-MOR

For Auxiliary Rear View Mirrors for Automotive Vehicles (Int. Cl. 12).

First use Nov. 1, 1966.

Class 23 — Cutlery, Machinery, and Tools, and Parts Thereof

854,377. Carbitron Development Ltd., Burnaby, British Columbia, Canada. SN 258,491. Filed P.R. 11-14-66; Am. S.R. 5-27-68.

KOPYKUTTER

Owner of Canadian Reg. No. 148,508, dated Dec. 9, 1966.
For Milling Machines (Int. Cl. 7).
First use Feb. 2, 1966; in commerce May 21, 1966.

854,378. Forbes Labeltape Company, Grand Rapids, Mich. SN 258,640. Filed P.R. 10-6-66; Am. S.R. 6-5-68.

TAKE-a-label

For Label-Dispensing Machines (Int. Cl. 7).
First use Oct. 28, 1965.

854,379. Kentmaster Mfg. Co., Inc., Los Angeles, Calif. SN 263,836. Filed P.R. 2-2-67; Am. S.R. 5-8-68.

cleaver action

For Carcass-Splitting Saws for the Meat Industry, Same Being Provided With an Elongated, Oscillating Saw Blade (Int. Cl. 7).
First use in or about November 1965.

854,380. Aero-Motive Manufacturing Company, Kalamazoo, Mich. SN 268,563. Filed P.R. 4-7-67; Am. S.R. 6-7-68.

POW-R-CARRIAGE

For Unidirectionally Urged Mechanism for Applying Tension to Flexible Elements Such as Conductors, Conduits and Cables (Int. Cl. 7).
First use Aug. 24, 1966.

854,381. Dodgen Industries, Inc., Humboldt, Iowa. SN 269,299. Filed P.R. 4-17-67; Am. S.R. 5-22-68.

Hydra-Pump

For Hydraulically Operated High Pressure Pumps Useful for Washing, Descaling, and Disinfecting Machinery, Buildings, Farm Animals, and the Like (Int. Cl. 7).
First use Jan. 4, 1966.

854,382. Sarlo Power Mowers, Inc., Fort Myers, Fla. SN 276,043. Filed P.R. 7-14-67; Am. S.R. 4-23-68.

Sarlo

For Power Lawn Mowers (Int. Cl. 7).
First use on or about Sept. 1, 1965.

Class 26 — Measuring and Scientific Appliances

854,383. The Bin-Dicator Company, Detroit, Mich. SN 239,712. Filed P.R. 2-28-66; Am. S.R. 5-23-68.

PROBE LEVEL

For Devices for Detecting, Indicating and/or Controlling the Level of Material in a Container and Parts Thereof Including Level Sensing Electrodes, Electrode Extensions and Connector Cables (Int. Cl. 9).
First use Nov. 26, 1965.

854,384. Renauld International, Ltd., Fitchburg, Mass., assignee of Sea & Ski Corporation, d.b.a. Renauld International, Reno, Nev. SN 245,022. Filed P.R. 5-5-66; Am. S.R. 6-6-68.

SUPER-VISORS

For Sunshades (Int. Cl. 9).
First use Mar. 30, 1966.

854,385. Shield Mfg., Inc., Buffalo, N.Y., by change of name from Roberts Dental Manufacturing Co., Inc., Buffalo, N.Y. SN 270,511. Filed P.R. 5-2-67; Am. S.R. 6-12-68.

GRIPPER

For Retaining Bands for Holding Eyeglasses in Place on the Wearer (Int. Cl. 9).
First use Apr. 5, 1967.

Class 29 — Brooms, Brushes, and Dusters

854,386. Flip-Mop, Inc., Rosedale, N.Y. SN 267,139. Filed P.R. 3-20-67; Am. S.R. 6-11-68.

FLIP-MOP

For Mops for Cleaning or Waxing (Int. Cl. 21).
First use Jan. 2, 1957.

Class 46 — Foods and Ingredients of Foods

854,387. Clyde A. Harbin, Whitehaven, Tenn. SN 259,113. Filed P.R. 11-21-66; Am. S.R. 4-1-68.

SHAKEMIX-R

For Milk Substitute for Admixture With Ice Cream and the Like in Making Milkshakes (Int. Cl. 29).
First use Sept. 26, 1966.

854,388. Max Russer Inc., Rochester, N.Y. SN 270,281. Filed P.R. 4-28-67; Am. S.R. 6-4-68.

WUNDERBAR

"Wunderbar" is a German word meaning "wonderful" or "marvelous."
For Meat Products and More Particularly, Weiners or Frankfurters (Int. Cl. 29).
First use September 1965.

854,389. Max Russer Inc., Rochester, N.Y. SN 270,282. Filed P.R. 4-28-67; Am. S.R. 6-4-68.

RUSSER

For Prepared Meat Products—Namely, Frankfurters, Pork Sausage, Liverwurst, Salami, Head Cheese, and Other Cold Cuts (Int. Cl. 29).
First use May 1963.

854,390. Watkins Products, Inc., d.b.a. King Laboratories, Winona, Minn. SN 273,435. Filed P.R. 6-8-67; Am. S.R. 5-31-68.

FORAGE FRESH

For Additive To Improve the Palatability of Livestock Feed (Int. Cl. 1).
First use Apr. 25, 1967.

Class 51 — Cosmetics and Toilet Preparations

854,391. Wolff Freres, Inc., New York, N.Y. SN 286,402. Filed P.R. 12-7-67; Am. S.R. 5-8-68.

WIND PROOF

For Protective Skin Lotion (Int. Cl. 3).
First use Feb. 26, 1964.

Service Marks

Class 100 — Miscellaneous

854,392. Service Systems Corporation, Buffalo, N.Y. SN 224,560. Filed P.R. 7-29-65; Am. S.R. 4-17-68.

SERVICE SYSTEMS

For Cafeteria and Vending Machine Services (Int. Cl. 42).
First use on or about July 1, 1958.

854,393. Bratwurst House, Inc., St. Cloud, Minn. SN 283,206. Filed P.R. 10-24-67; Am. S.R. 5-29-68.
"Bratwursthaus" is literally translated as "fried sausage house" in English.

BRATWURSTHAUS

For Restaurant Services (Int. Cl. 42).
First use Sept. 4, 1962.

Class 103 — Construction and Repair

854,394. Service Systems Corporation, Buffalo, N.Y. SN 224,559. Filed P.R. 7-29-65; Am. S.R. 4-17-68.

SERVICE SYSTEMS

For Janitorial Services (Int. Cl. 37).
First use on or about July 1, 1958.

TRADEMARK REGISTRATIONS RENEWED

69,714. "SNOWDRIFT" AND DESIGN. Cl. 46 (Int. Cl. 29). 6-30-08.
70,084. REPRESENTATION OF HEAD OF CUTTING TOOL. Cl. 23 (Int. Cl. 8). 7-28-08.
70,180. REPRESENTATION OF HEAD OF CUTTING TOOL. Cl. 4 (Int. Cl. 3). 8-11-08.
70,324. HAND AND TOOL (DESIGN). Cl. 40 (Int. Cl. 26). 8-25-08.
71,138. SQUARE DEAL. Cl. 37 (Int. Cl. 16). 11-3-08.
71,363. TRICOFERO DE BARRY. Cl. 18 (Int. Cl. 5). 11-17-08.
241,991. AMIJEL. Cl. 5 (Int. Cl. 1). 5-8-28.
242,201. NINONESE. Cl. 42 (Int. Cl. 24). 5-15-28.
242,945. SAMSONBAK. Cl. 39 (Int. Cl. 25). 6-5-28.
243,032. POWER-PLUS. Cl. 21 (Int. Cl. 9). 6-12-28.
243,215. TUF-FIR. Cl. 37 (Int. Cl. 16). 6-12-28.
243,298. EATMOR. Cl. 46 (Int. Cl. 29). 6-19-28.
243,509. TUF-FIR. Cl. 2 (Int. Cl. 16). 6-26-28.
243,826. OKEH. Cl. 36 (Int. Cl. 9). 7-3-28.
244,302. GRIFFINET. Cl. 32 (Int. Cl. 20). 7-17-28.
244,459. "AICO" ENCLOSED BY RECTANGULAR DESIGN. Cl. 37 (Int. Cl. 16). 7-17-28.
245,427. "KINGSFORD'S" ETC. AND LABEL DESIGN. Cl. 46 (Int. Cl. 30). 8-14-28.
246,040. "F & F" AND DESIGN. Cl. 18 (Int. Cl. 5). 8-28-28.
246,129. MI 31. Cl. 18 (Int. Cl. 5). 9-4-28.
247,157. CELOWAX. Cl. 37 (Int. Cl. 16). 9-18-28.
248,268. 999. Cl. 46 (Int. Cl. 30). 10-16-28.
248,980. CHROMALOID. Cl. 14 (Int. Cl. 6). 11-6-28.
249,354. PYRAMID. Cl. 23 (Int. Cl. 7). 11-13-28.
249,358. PRATT-LOW. Cl. 46 (Int. Cl. 29). 11-13-28.
249,359. PRATT-LOW AND DESIGN. Cl. 46 (Int. Cl. 29). 11-13-28.
249,570. ABRONIA. Cl. 46 (Int. Cl. 31). 11-20-28.
249,588. EXOTIQUE. Cl. 39 (Int. Cl. 25). 11-20-28.
249,763. CREMO-CARBONATES. Cl. 18 (Int. Cl. 5). 11-20-28.
249,777. "PAN-TONE" AND DESIGN. Cl. 18 (Int. Cl. 5). 11-20-28.
249,805. ARCADIAN. Cl. 6 (Int. Cl. 1). 11-20-28.
249,815. AMERICAN AND DESIGN. Cl. 23 (Int. Cl. 8). 11-20-28.
249,957. BOSCO. Cl. 46 (Int. Cl. 30). 11-27-28.
250,007. "DIAMOLITE." Cl. 22 (Int. Cl. 28). 11-27-28.
434,870. OLIVER GOLDSMITH. Cl. 6 (Int. Cl. 5). 12-9-47.
434,902. HANDORMON. Cl. 51 (Int. Cl. 3). 12-9-47.
435,245. ARK. Cl. 14 (Int. Cl. 6). 12-16-47.
436,133. WRITE INC. AND DESIGN. Cl. 11 (Int. Cl. 16). 1-27-48.
437,994. HOLMEGAARD'S GLASS. Cl. 33 (Int. Cl. 21). 4-6-48.
438,458. ROYAL. Cl. 34 (Int. Cl. 8). 4-20-48.
438,560. MALCOMIZED. Cl. 13 (Int. Cl. 6). 5-4-48.
438,894. ELEKEM ETC. AND DESIGN. Cl. 34 (Int. Cl. 11). 5-18-48.
438,974. TOKAY AND DESIGN. Cl. 46 (Int. Cl. 30). 5-25-48.
438,994. VERITAS. Cl. 15 (Int. Cl. 4). 6-1-48.
439,041. LONGVIEW. Cl. 26 (Int. Cl. 9). 6-1-48.
439,089. SPRINT. Cl. 45 (Int. Cl. 32). 6-1-48.
439,972. QUEEN OF DIAMONDS. Cl. 28 (Int. Cl. 14). 8-3-48.
439,975. GAMTONE. Cl. 6 (Int. Cl. 5). 8-3-48.
440,655. DESIGN OF CLAW. Cl. 22 (Int. Cl. 28). 9-14-48.
440,721. STRIPER ATOM.. Cl. 22 (Int. Cl. 28). 9-21-48.
440,745. POPULAR. Cl. 37 (Int. Cl. 16). 9-21-48.
440,747. RED HAT. Cl. 37 (Int. Cl. 16). 9-21-48.
440,944. CONSOLTEX. Cl. 37 (Int. Cl. 16). 10-12-48.
440,977. BUTTERFLY (DESIGN). Cl. 39 (Int. Cl. 25). 10-12-48.
441,044. HEAT FORM. Cl. 34 (Int. Cl. 11). 10-19-48.
441,141. 10-A-C. Cl. 46 (Int. Cl. 29). 10-26-48.
441,401. BURNBRAE. Cl. 39 (Int. Cl. 25). 11-23-48.
441,429. DI-CHLOR MULSION. Cl. 6 (Int. Cl. 5). 11-23-48.
500,069. WILDMERE. Cl. 46 (Int. Cl. 29). 4-13-48.
500,137. CRESTMONT. Cl. 46 (Int. Cl. 30). 4-27-48.
500,470. REZGARD. Cl. 6 (Int. Cl. 1). 6-1-48.

500,557. LUTRON. Cl. 6 (Int. Cl. 1). 6-1-48.
500,609. RED CIRCLE COFFEE AND DESIGN. Cl. 46 (Int. Cl. 30). 6-8-48.
500,610. EIGHT O'CLOCK COFFEE. Cl. 46 (Int. Cl. 30). 6-8-48.
500,614. BOKAR COFFEE. Cl. 46 (Int. Cl. 30). 6-8-48.
500,722. MUD-FLO. Cl. 35 (Int. Cl. 17). 6-22-48.
501,099. TIP-TOP. Cl. 40 (Int. Cl. 26). 7-20-48.
501,101. NEWCOMER. Cl. 17 (Int. Cl. 34). 7-20-48.
501,251. OLD ENGLISH. Cl. 29 (Int. Cl. 21). 7-27-48.
501,262. SS-C. Cl. 6 (Int. Cl. 1). 7-27-48.
501,307. PENN SPRING. Cl. 49 (Int. Cl. 33). 8-3-48.
501,891. ADONIS. Cl. 34 (Int. Cl. 34). 8-31-48.
502,965. DORSEY AND DESIGN. Cl. 19 (Int. Cl. 12). 10-12-48.
502,975. ARDENA AND DESIGN. Cl. 51 (Int. Cl. 3). 10-12-48.
503,115. KEWANEE. Cl. 34 (Int. Cl. 11). 10-19-48.
503,133. KWELL. Cl. 18 (Int. Cl. 5). 10-19-48.
503,158. VACHER-BALM. Cl. 18 (Int. Cl. 5). 10-19-48.
503,191. MARACELL. Cl. 6 (Int. Cl. 1). 10-19-48.
503,202. AGUA DE FLORIDA. Cl. 51 (Int. Cls. 3 and 5). 10-19-48.
503,216. SLIPKNOT AND DESIGN. Cl. 5 (Int. Cl. 17). 10-19-48.
503,221. WINMORE. Cl. 7(Int. Cl. 22). 10-19-48.
503,222. SYCAMORE. Cl. 7 (Int. Cl. 22). 10-19-48.
503,330. ONE HAND BOOK STRIP TICKETS. Cl. 38 (Int. Cl. 16). 10-19-48.
503,359. MATCHLESS AND DESIGN. Cl. 4 (Int. Cl. 3). 10-26-48.
503,430. ARDEN. Cl. 51 (Int. Cls. 3 and 5). 10-26-48.
503,462. ASTOR PIANO CO. Cl. 36 (Int. Cl. 15). 10-26-48.
503,628. BOB SMART. Cl. 39 (Int. Cl. 25). 11-2-48.
503,688. ALL'S RIGHT WITH THE WORLD DEPARTMENT. Cl. 38 (Int. Cl. 16). 11-2-48.
503,798. CALOTABS. Cl. 18 (Int. Cl. 5). 11-9-48.
503,852. BERKELEY CLUB. Cl. 8 (Int. Cl. 34). 11-16-48.
503,860. SLUDGOUT. Cl. 6 (Int. Cl. 1). 11-16-48.
503,868. LE BLOND AND FLEUR DESIGN. Cl. 23 (Int. Cl. 7). 11-16-48.
503,902. FRESH'ND-AIRE. Cl. 34 (Int. Cl. 11). 11-16-48.
503,928. CANTON. Cl. 42 (Int. Cl. 24). 11-16-48.
503,955. WERNET'S PLATE BRUSH. Cl. 29 (Int. Cl. 21). 11-16-48.
504,003. THIS CHANGING WORLD. Cl. 38 (Int. Cl. 16). 11-16-48.
504,071. MILLERS RELIEF. Cl. 6 (Int. Cl. 5). 11-23-48.
504,099. PORTIS. Cl. 39 (Int. Cl. 25). 11-23-48.
504,122. HAMMONTON PARK. Cl. 39 (Int. Cl. 25). 11-23-48.
504,166. CHI CHI. Cl. 22 (Int. Cl. 28). 11-23-48.

TRADEMARK REGISTRATIONS CANCELED

Section 7(d)

765,367. JOY 2 AND DESIGN. Cl. 18. 2-25-64.
795,945. ENDURA. Cl. 22. 9-14-65.
832,088. REDI-FLO. Cl. 15. 7-18-67.
839,290. DEPEND. Cl. 52. 11-21-67.

Section 8

718,539. DMI AND DESIGN. Cl. 23. 7-18-61.
718,608. UPERISATION. Cl. 46. 7-18-61.
720,125. VIC TANNY. Cl. 100. 8-15-61.
720,809. CATALINA. Cl. 2. 9-5-61.
721,033. REPRESENTATION OF PART OF HEAD OF CAT. Cl. 38. 9-5-61.
721,034. MIKE THE MAGICAT. Cl. 38. 9-5-61.
721,035. MIKE THE MAGICAT. Cl. 38. 9-5-61.
721,256. DURACLAD. Cl. 21. 9-12-61.
721,302. TEMP-O-LARM. Cl. 26. 9-12-61.
722,976. CONETIC NETIC ALLOYS ETC. AND DESIGN. Cl. 14. 10-24-61.
724,848. THE WELCOME WAGON VISITOR-NEWS. Cl. 38. 12-5-61.
725,336. PHOTOPLAX. Cl. 26. 12-19-61.
726,477. EYE-FIDELITY EYE-FI AND DESIGN. Cl. 26. 1-16-62.

The following registrations issued June 19, 1962

732,887. MILK-MATE. Cl. 2.
732,888. FROSTWOOD. Cl. 2.
732,901. ZEECON KR. Cl. 6.
732,913. ARTISAN. Cl. 12.
732,914. McCORD. Cl. 12.
732,915. LIQUI-KAULK. Cl. 12.
732,916. WILLSTRES. Cl. 12.
732,919. TS AND DESIGN. Cl. 12.
732,921. VIRO GLAS. Cl. 12.
732,922. SILVER STAR AND DESIGN OF STAR. Cl. 12.
732,923. VOSS AND DESIGN. Cl. 12.
732,924. CLIMATITE. Cl. 12.
732,927. CANFORITE. Cl. 12.
732,931. RUTHCO AND DESIGN. Cl. 12.
732,933. BON-SEAL. Cl. 12.
732,934. PAVAJUSTER. Cl. 12.
732,942. MOOREHOLD. Cl. 13.
732,944. WARNUTS. Cl. 13.
732,956. FELITAL. Cl. 14.
732,963. PURASIL. Cl. 14.
732,967. HYDRASEAL. Cl. 15.
732,971. BI-KOTE. Cl. 16.
732,972. DUROWEAR. Cl. 16.
732,973. LINOTEX. Cl. 16.
732,974. METAL-O. Cl. 16.
732,979. THRIFT CRAFT. Cl. 16.
732,981. PINCO. Cl. 16.
732,984. HEL/MET. Cl. 16.
732,987. CHESTNUT HILL. Cl. 17.
732,988. LOUVRE. Cl. 17.
732,992. WEB. Cl. 17.
732,996. SBD. Cl. 19.
732,997. SELFGARD. Cl. 19.
732,998. SIDE KICK AND DESIGN. Cl. 19.
733,005. RIO GRANDE AND STAR DESIGN. Cl. 20.
733,007. PHYSIKIT. Cl. 21.
733,008. ITT KELLOGG AND DESIGN. Cl. 21.
733,013. PANFAX. Cl. 21.
733,014. WIL-SHO. Cl. 21.
733,016. FONE-A-MILE. Cl. 21.
733,017. BL BURNDEPT AND DESIGN. Cl. 21.
733,023. TRIPLE-TESTED TRANSMISSION AND DESIGN. Cl. 23.
733,024. PALMINI ENG. Cl. 23.
733,025. PUSEY & JONES. Cl. 23.
733,027. SEA-JET. Cl. 23.
733,029. TERMACO. Cl. 23.
733,032. SIDINGMASTER. Cl. 23.
733,033. WELSBACH. Cl. 23.
733,034. WELSBACH AND DESIGN. Cl. 23.
733,035. UNI-TEN. Cl. 23.
733,036. GIG AND DESIGN. Cl. 23.
733,043. PUNCHATRON. Cl. 23.
733,045. FANCIFUL DESIGN. Cl. 23.
733,055. CANOGA. Cl. 23.
733,056. SPACE-AIR. Cl. 23.
733,060. MR. V.I.P. Cl. 23.
733,062. DURKORD. Cl. 23.
733,069. SARATOGA. Cl. 24.
733,071. AGOLUX. Cl. 26.
733,075. DRI MATE. Cl. 26.
733,085. TRU STAR. Cl. 28.
733,088. B•K. Cl. 29.
733,089. BOAR-LON. Cl. 29.
733,090. FLORAL DESIGN. Cl. 30.
733,092. LAS VEGAS ROYAL. Cl. 32.
733,093. LEADER. Cl. 32.
733,094. LADY CASHMERE. Cl. 32.
733,095. NOVO. Cl. 32.
733,110. TWIST. Cl. 36.
733,112. LE MARC. Cl. 36.
733,114. CRESTWOOD. Cl. 37.
733,117. TUB-SHEER. Cl. 39.
733,119. ESSENTIALS BY SHUKO AND DESIGN. Cl. 39.
733,121. CHECKMATES. Cl. 39.
733,123. MARIO MARANO. Cl. 39.
733,126. MORFAB. Cl. 39.
733,134. SEMPER-SET. Cl. 39.
733,135. WONDER-CREASE. Cl. 39.

733,142. SEN-SATION. Cl. 42.
733,144. FORT LUSTRE. Cl. 42.
733,145. SEESAW. Cl. 43.
733,155. HAVANA CLUB. Cl. 46.
733,157. CENTENNIAL. Cl. 46.
733,158. KING KONG. Cl. 49.
733,160. TANKS FOR THE WORLD AND DESIGN. Cl. 50.
733,161. HEMCOLYTE. Cl. 50.
733,167. KWIK KOOKER. Cl. 21.
733,168. SUPER POP. Cl. 22.
733,170. SUPER DUTY. Cl. 25.
733,172. REMINGTON. Cl. 26.
733,173. BOYNTON ASSOCIATES ETC. AND DESIGN. Cl. 26.
733,175. THE HONOR ROLL OF CATHOLIC GRADUATES. Cl. 38.
733,176. PROTECTIVE PACKAGING & PACKAGING TECHNIQUES. Cl. 38.
733,177. GREATEST HEADLINES OF THE CENTURY. Cl. 38.
733,178. FAMILY CAMPING. Cl. 38.
733,181. WHANG-LEATHER. Cl. 39.
733,183. PULL & SQUEEZE PUTTY. Cl. 44.
733,184. LIO-LATTE ETC. AND DESIGN. Cl. 46.
733,202. LUSTER FIXED. Cl. 106.

TRADEMARK REGISTRATIONS AMENDED, DISCLAIMED, CORRECTED, ETC.

266,136. MANETO AND DESIGN. Cl. 20. 1-14-30. Mannington Mills Inc., Salem, N.J. Corrected: In the certificate, lines 3 and 17, in the heading, signature and in the statement, column 1, line 1, ", Incorporated" should be deleted and *Inc.* should be inserted.

500,532. SHAVINE. Cl. 51. 6-1-48. Morehouse Manufacturing Company, doing business as The Shaving Powder Co. Carson Chemical Company, Savannah, Ga. Amended to appear:

Shavine

555,445. MANOLEUM. Cl. 20. 2-26-52. Mannington Mills Inc., Salem, N.J. Corrected: In the certificate, lines 4 and 15, in the heading, signature and in the statement, column 1, line 1, ", Incorporated" should be deleted and *Inc.* should be inserted.

564,090. MAN-O-PLASTIC. Cl. 20. 9-16-52. Mannington Mills Inc., Salem, N.J. Corrected: In the certificate, lines 4, 5 and 16, in the heading, signature and in the statement, column 1, line 1, ", Incorporated" should be deleted and *Inc.* should be inserted.

571,278. MAN-O-TILE. Cl. 20. 3-3-53. Mannington Mills Inc., Salem, N.J. Corrected: In the certificate, lines 4 and 15, in the heading, signature and in the statement, column 1, line 1, ", Incorporated" should be deleted and *Inc.* should be inserted.

599,853. LUSTRE-TILE. Cl. 12. 12-28-54. Mannington Mills Inc., Salem, N.J. Corrected: In the certificate, lines 4 and 15, and in the statement, column 1, line 1, ", Incorporated" should be deleted and *Inc.* should be inserted.

657,684. VINYL-TEX. Cl. 20. 1-28-58. Mannington Mills Inc., Salem, N.J. Corrected: In the statement, column 1, line 1, ", Incorporated" should be deleted and *Inc.* should be inserted.

738,784. ACME WINCREST AND DESIGN. Cl. 46. 10-2-62. American Stores Company. Acme Markets, Inc., Philadelphia, Pa. Amended to appear:

Wincrest

850,720. THE JUDGE'S SECRET. Cl. 47. 6-11-68. Llords & Elwood Winery, Los Angeles, Calif. Corrected: In the statement, column 1, line 2, before "Beverly" *South* should be inserted.

REGISTRATIONS PUBLISHED UNDER SEC. 12(c)

The following marks registered under the act of 1905, or the act of 1881, are published under the provisions of section 12(c) of the Trademark Act of 1946. These registrations are not subject to opposition but are subject to cancellation under section 14 of the act of 1946.

Class 6 — Chemicals and Chemical Compositions

246,347. Sept. 4, 1928. The Naugatuck Chemical Company, New York, N.Y. Pub. by Uniroyal, Inc., New York, N.Y.

SAFEX

For Dinitrophenyl Dimethyl Dithiocarbamate, a Chemical for Use in Compounding Rubber (Int. Cl. 1).

246,413. Sept. 4, 1928. The Naugatuck Chemical Company, New York, N.Y. Pub. by Uniroyal, Inc., New York, N.Y.

SUNPROOF

For Chemical Preparation for Use in Compounding Rubber (Int. Cl. 1).

Class 12 — Construction Materials

281,625. Mar. 24, 1931. General Refractories Company, Philadelphia, Pa. Pub. by registrant.

RITEX

For Refractory Brick.

440,153. Aug. 17, 1948. The Lehon Company, Chicago, Ill. Pub. by Philip Carey Corporation, Cincinnati, Ohio.

NU-TOP

For Plastic Asphaltic Roof Covering (Int. Cl. 19).

Class 14 — Metals and Metal Castings and Forgings

399,190. Dec. 22, 1942. Electro Manganese Corporation, Knoxville, Tenn. Pub. by Foote Mineral Company, Exton, Pa.

ZMNZ

For Metallic Manganese—Namely, Manganese Produced by The Electrowinning Thereof From Manganese Ores.

Class 16 — Protective and Decorative Coatings

403,959. Oct. 26, 1943. Devoe & Raynolds Company, Inc., New York, N.Y. Pub. by Celanese Coatings Company, New York, N.Y.

SOUTH SEAS

For Marine Paint.

Class 18 — Medicines and Pharmaceutical Preparations

327,959. Sept. 10, 1935. Ernest E. Johnson, d.b.a. Ernest E. Johnson Co., Minneapolis, Minn. Pub. by Ernest E. Johnson Co., Inc., Davenport, Iowa.

Kongen af Danmark

For Medicated Candy, Commonly Known as Cough Drops.

Class 21 — Electrical Apparatus, Machines, and Supplies

327,994. Sept. 10, 1935. Dictograph Products Company, Inc., New York, N.Y. Pub. by Dictograph Products, Inc., Danbury, Conn.

TELEMATIC

For Interior Telephone Systems.

Class 22 — Games, Toys, and Sporting Goods

246,613. Sept. 11, 1928. United States Rubber Company, New York, N.Y. Pub. by Uniroyal, Inc., New York, N.Y.

TIGER

For Golf Balls (Int. Cl. 28).

Class 23 — Cutlery, Machinery, and Tools, and Parts Thereof

237,653. Jan. 17, 1928. Owatonna Tool Company, Owatonna, Minn. Pub. by registrant.

OTC

For Automobile Tools—Namely, Gear Pullers, Bushing Sets, and Other Named Cutlery, Machinery, and Tools, and Parts Thereof (Int. Cls. 7 and 8).

Class 26 — Measuring and Scientific Appliances

234,920. Nov. 8, 1927. Clay-Adams Company, Inc., New York, N.Y. Pub. by Clay-Adams, Inc., New York, N.Y.

GOLD SEAL NON-CORROSIVE ADAMS

For Microscopic Cover Glasses and Microscopic Slides (Int. Cl. 9).

440,471. Sept. 7, 1948. Shuron Optical Company, Inc., Geneva, N.Y. Pub. by Textron Inc., Rochester, N.Y.

TONETEX

For Ophthalmic Lenses and Lens Blanks (Int. Cl. 9).

Class 28 — Jewelry and Precious-Metal Ware

400,508. Mar. 16, 1943. Joseph H. Meyer Bros., Brooklyn, N.Y. Pub. by The Richelieu Corp., Holbrook, N.Y.

Richelieu

For Necklaces, Bracelets, Jewelry Clips, Broaches, Earrings, and Other Articles of Men's and Women's Costume Jewelry, Not Including Watches.

Class 35 — Belting, Hose, Machinery Packing, and Nonmetallic Tires

245,262. Aug. 7, 1928. United States Rubber Company, New York, N.Y. Pub. by Uniroyal, Inc., New York, N.Y.

CON-TRAK-TOR

For Rubber Tires for Vehicles (Int. Cl. 12).

Class 39 — Clothing

148,913. Nov. 29, 1921. F. A. Patrick & Co., Duluth, Minn. Pub. by North Shore Manufacturing Company, Duluth, Minn.

Northland

For Aprons, Bath Robes, etc.

215,422. July 20, 1926. J. Schoeneman, Inc., Owings Mills, Md. Pub. by registrant.

TRI-PLY

For Coats, Vests, Trousers, Knickerbockers, and Overcoats for Men, Youths, and Boys.

219,983. Oct. 26, 1926. J. Schoeneman, Inc., Owings Mills, Md. Pub. by registrant.

AERTEX

For Coats, Vests, Trousers, and Overcoats Made Only of Wool or Worsted Material for Men, Youths, and Boys.

221,667. Dec. 7, 1926. J. Schoeneman, Inc., Owings Mills, Md. Pub. by registrant.

UNITRIM

For Coats, Vests, Trousers, Knickerbockers, and Overcoats for Men, Youths, and Boys.

224,602. Mar. 1, 1927. J. Schoeneman, Inc., Owings Mills, Md. Pub. by registrant.

SULGRAVE

For Coats, Vests, and Trousers for Men.

229,284. June 21, 1927. J. Schoeneman, Inc., Owings Mills, Md. Pub. by registrant.

Erinile

For Coats, Vests, and Trousers for Men.

229,285. June 21, 1927. J. Schoeneman, Inc., Owings Mills, Md. Pub. by registrant.

RIVIERA

For Coats, Vests, and Trousers for Men.

235,579. Nov. 22, 1927. J. Schoeneman, Inc., Owings Mills, Md. Pub. by registrant.

Coronado

For Coats, Vests, and Trousers for Men, Youths, and Boys.

247,541. Oct. 2, 1928. Gem-Dandy Garter Co., Madison, N.C. Pub. by Gem-Dandy, Inc., Madison, N.C.

"GEMCO"

For Garters and Suspenders (Int. Cl. 25).

417,204. Oct. 16, 1945. The William Carter Company, Needham Heights, Mass. Pub. by registrant.

TRIGS

For Garments—Namely, Men's Shorts.

437,755. Mar. 30, 1948. Eye-Ful Lingerie Inc., New York, N.Y. Pub. by Sam & Ruth Enterprises, Inc., Westport, Conn.

EYE-FUL

For Slips, Brassieres, Girdles, etc. (Int. Cl. 25).

Class 42 — Knitted, Netted, and Textile Fabrics, and Substitutes Therefor

337,522. Aug. 11, 1936. Terhune, Yereance & Wolff, Inc., New York, N.Y. Pub. by J. Schoeneman, Inc., Owings Mills, Md.

KOOLAIRE

For Woolen Fabrics in the Piece.

Class 46 — Foods and Ingredients of Foods

436,621. Feb. 17, 1948. A. E. Illes Company, Dallas, Tex. Pub. by registrant.

VAN-ILLES

For Vanilla and Vanillin Concentrates for Food Flavoring Purposes (Int. Cl. 30).

Class 49 — Distilled Alcoholic Liquors

313,402. May 29, 1934. Ets. C. Berger & Cie, S.A., Marseille, France. Pub. by C. Berger & Cie, S.A., Marseille, France.

BERGER

For Anisettes.

Class 50 — Merchandise Not Otherwise Classified

248,035. Oct. 16, 1928. United States Rubber Company, New York, N.Y. Pub. by Uniroyal, Inc., New York, N.Y.

LEXIDE

For Sheet Material Made of Fibre and Rubber for Manufacture Directly or With Further Treatment Into a Wide Variety of Articles (Int. Cl. 17).

Class 51 — Cosmetics and Toilet Preparations

243,206. June 12, 1928. Chesebrough Manufacturing Company, Consolidated, New York, N.Y. Pub. by Chesebrough-Pond's Inc., New York, N.Y.

BLUE SEAL

For Pomade (Int. Cl. 3).

341,170. Dec. 1, 1936. Ferdinand T. Hopkins, d.b.a. Ferd. T. Hopkins & Son, New York, N.Y. Pub. by registrant.

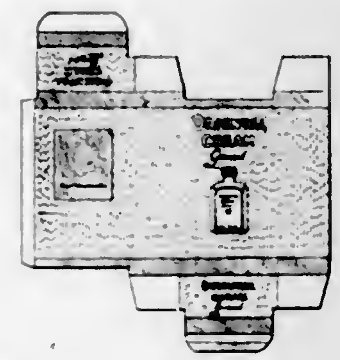

For Skin Lotion.

434,418. Nov. 18, 1947. Schering Corporation, Bloomfield, N.J. Pub. by Pharmaco, Inc., Kenilworth, N.J.

ARTRA

For Cosmetic Lotion (Int. Cl. 3).

INDEX OF REGISTRANTS

AUGUST 6, 1968

(Registered ; Renewed ; Canceled ; Amended, Disclaimed, Corrected, etc. ; New Certificates ; 12c Publications.)

Bourbon Industries, Inc., Bourbon, Ind. 732,933, canc. Cl. 12.
Boyle-Midway Inc., Jersey City, N.J., to American Home Products Corp., New York, N.Y. 501,251, ren. 8-6-68. Cl. 29.
Boynton Associates: *See*—
Boynton, William W.
Boynton, William W., d.b.a. Boynton Associates, La Canada, Calif. 733,173, canc. Cl. 26.
Bradford Electronics, Inc., Bradford, Pa. 733,016, canc. Cl. 21.
Bratwurst House, Inc., St. Cloud, Minn. 854,393. Cl. 100.
Breck, John H., Inc., Wayne, N.J. 854,314-15, pub. 5-21-68. Cl. 51.
Breck, John H., Inc., Wayne, N.J. 854,330-1, pub. 5-21-68. Cl. 52.
Brilliant Screen & Tripod, Inc., Jersey City, N.J. 854,130, pub. 5-21-68. Cl. 26.
Brinkmann, Martin, Bremen, Germany. 732,987-8, canc. Cl. 17.
Brookpark-Royalon, Inc., Sebring, Ohio. 853,918, pub. 5-21-68. Cl. 2.
Brown Co., Holyoke, Mass. 854,189, pub. 5-21-68. Cl. 37.
Brown Engineering Co., Inc., from Brown Engineering Co., Inc., Huntsville, Ala. 854,336, pub. 5-21-68. Cl. 100.
Brown & Williamson Tobacco Corp., Louisville, Ky. 732,992, canc. Cl. 17.
Bruder Wuster, Vienna, Austria. 733,062, canc. Cl. 23.
Bruel Co., Los Angeles, Calif. 720,809, canc. Cl. 2.
Brunswick Corp., Chicago, Ill. 854,068, pub. 5-21-68. Cl. 22.
Bud Type Cleaner Co.: *See*—
Hornoe, Thomas H.
Budd Co., The, Philadelphia, Pa. 853,892 pub. 5-21-68. Cl. 1.
Burd & Fletcher Co., Kansas City, Mo. 854,355, pub. 5-21-68. Cl. 101.
Burke Rubber Co., Inc., San Jose, Calif. 853,966, pub. 5-21-68. Cl. 12.
Burleigh, Robert P., Collegeville, Pa. 853,989, pub. 5-21-68. Cl. 13.
Burndept Ltd., Kent, England. 733,017, canc. Cl. 21.
Bushnell, David P., Altadena, Calif. 854,131, pub. 5-21-68. Cl. 26.
C & W Mfg. Corp., New York, N.Y. 732,997, canc. Cl. 19.
Cage, Darcy L., Fullerton, Calif. 441,044, ren. 8-6-68. Cl. 34.
Calgon Corp., from Calgon Corp., Pittsburgh, Pa. 853,938-9, pub. 5-21-68. Cl. 6.
Calgon Corp., from Calgon Corp., Pittsburgh, Pa. 853,945-8, pub. 5-21-68. Cl. 6.
California Artists: *See*—
Crocker, H. S., Co., Inc.
California Fruit Exchange: *See*—
Coachella Valley Grape Growers Assn.
California Products Corp., Cambridge, Mass. 853,969, pub. 5-21-68. Cl. 12.
California Spray-Chemical Corp., Wilmington, Del., and Richmond, Calif. to Chevron Chemical Co., San Francisco, Calif. 439,975, ren. 8-6-68. Cl. 6.
Calotabs Co., Daytona Beach, Fla. 503,798, ren. 8-6-68. Cl. 18.
Canadian Forest Products Ltd., British Columbia, Canada. 732,927, canc. Cl. 12.
Canadian Safety Fuse Co. Ltd., Quebec, Canada. 853,959, pub. 5-21-68. Cl. 9.
Canadian Schenley Distilleries, Ltd., Quebec, Canada. 854,293, pub. 5-21-68. Cl. 49.
Candygram, Inc., Beverly Hills, Calif. 854,306, pub. 5-21-68. Cl. 51.
Cannon Products, Inc., Faribault, Minn. 854,074, pub. 5-21-68. Cl. 22.
Canoga Mfg.: *See*—
Franklin, Thomas.
Canton Cotton Mills, to Canton Textile Mills, Inc., Canton, Ga. 503,928, ren. 8-6-68. Cl. 42.
Canton Textile Mills, Inc.: *See*—
Canton Cotton Mills.
Capitol Title & Escrow Corp., Washington, D.C. 854,345, pub. 5-21-68. Cl. 101.
Capp, A., & Son Ltd., Crayford, Kent, England. 854,132, pub. 5-21-68. Cl. 26.
Carbitron Development Ltd., British Columbia, Canada. 854,377. Cl. 23.
Carey, Philip, Corp.: *See*—
Lehon Co., The.
Carnation Co., Los Angeles, Calif. 854,018, pub. 5-21-68. Cl. 18.
Carter, William, Co., The, Needham Heights, Mass. 417,204, 12(c) pub. 8-6-68. Cl. 39.
Casa Leon Cigar Co. Inc., Tampa, Fla. 854,016, pub. 5-21-68. Cl. 17.
Cassano Enterprises, Inc., Dayton, Ohio. 854,371, pub. 5-21-68. Cl. 107.
Castle & Cooke, Inc., d.b.a. Dole Co., Honolulu, Hawaii. 854,250, pub. 5-21-68. Cl. 45.
Celanese Coatings Co.: *See*—
Devoe & Raynolds Co., Inc.
Celanese Corp.: *See*—
Celanese Corp. of America.
Celanese Corp. of America, to Celanese Corp., New York, N.Y. 242,201, ren. 8-6-68. Cl. 42.
Cepco Development Corp.: *See*—
Char's, Inc.
Challenger Electronics Ltd., British Columbia, Canada. 854,040, pub. 5-21-68. Cl. 21.
Chapman Valve Mfg. Co., The, Indian Orchard, Mass., to Crane Co., New York, N.Y. 438,560, ren. 8-6-68. Cl. 13.
Char's, Inc., from Cepco Development Corp., Winston-Salem, N.C. 854,352, pub. 5-21-68. Cl. 101.
Chattanooga Implement & Mfg. Co., Chattanooga, Tenn., to De Soto, Inc., Des Plaines, Ill. 438,458, ren. 8-6-68. Cl. 34.
Chesebrough Mfg. Co., Consolidated, by Chesebrough-Pond's Inc., New York, N.Y. 243,206, 12(c) pub. 8-6-68. Cl. 51.
Chesebrough-Pond's Inc.: *See*—
Chesebrough Mfg. Co., Consolidated.
Chevron Chemical Co.: *See*—
California Spray-Chemical Corp.
Chicago Malleable Castings Co.: *See*—
Clark Equipment Co.
Chips'n Twigs, Inc., Philadelphia, Pa. 854,225, pub. 5-21-68. Cl. 39.
Christian Service Brigade, Wheaton, Ill. 854,341, pub. 5-21-68. Cl. 100.
Chronetics, Inc., Yonkers, N.Y. 854,035-6, pub. 5-21-68. Cl. 21.
Chronetics, Inc., Yonkers, N.Y. 854,118-19, pub. 5-21-68. Cl. 26.
Cincinnati Shaper Co., The, Cincinnati, Ohio. 854,102, pub. 5-21-68. Cl. 23.
Cissell, W. M., Mfg. Co., d.b.a. W. M. Cissel Mfg. Co., Inc., Louisville, Ky. 854,113, pub. 5-21-68. Cl. 24.
Cissell, W. M., Mfg. Co., Inc.: *See*—
Cissell, W. M., Mfg. Co.
Clairol Inc., New York, N.Y. 854,149, pub. 5-21-68. Cl. 29.
Clairol Inc., New York, N.Y. 854,307, pub. 5-21-68. Cl. 51.
Clairol Inc., New York, N.Y. 854,310-12, pub. 5-21-68. Cl. 51.
Clark Equipment Co., Buchanan, Mich., from Chicago Malleable Castings Co., Chicago, Ill. 854,002, pub. 5-21-68. Cl. 14.
Clay-Adams Co., Inc., by Clay-Adams, Inc., New York, N.Y. 234,920, 12(c) pub. 8-6-68. Cl. 26.
Clay-Adams, Inc.: *See*—
Clay-Adams Co., Inc.
Club Aluminum Products Co.: *See*—
Standard International Corp.
C-Mor Co., Rochester, N.Y. 854,376. Cl. 19.
Coachella Valley Grape Growers Association, Coachella, to California Fruit Exchange, Sacramento, Calif. 249,570, ren. 8-6-68. Cl. 46.
Cohen, Lawrence M., Greensboro, N.C. 733,112, canc. Cl. 36.
Coleman Co., Inc., The, Wichita, Kans. 854,165, pub. 5-21-68. Cl. 34.
Columbia Broadcasting System, Inc.: *See*—
General Phonograph Corp.
Columbian Steel Tank Co., Kansas City, Mo. 733,160, canc. Cl. 50.
Commercial Solvents Corp., New York, N.Y., to Reed & Carnrick, Kenilworth, N.J. 503,133, ren. 8-6-68. Cl. 18.
Compagnie Graver, Societe Anonyme, Brabant, Belgium. 732,916, canc. Cl. 12.
Computer Instruments Corp., Hempstead, N.Y. 854,241, pub. 5-21-68. Cl. 44.
Congoleum-Nairn Inc., Kearny, N.J. 854,033, pub. 5-21-68. Cl. 20.
Consolidated Packaging Corp.: *See*—
Consolidated Paper Co.
Consolidated Paper Co., Monroe, Mich., and Aurora, Ill., to Consolidated Packaging Corp., Detroit, Mich. 440,944, ren. 8-6-68. Cl. 37.
Continental Baking Co., Rye, N.Y. 854,278, pub. 5-21-68. Cl. 46.
Continental Coffee Co., Chicago, Ill. 854,280, pub. 5-21-68. Cl. 46.
Continental Distilling Corp.: *See*—
Penn Spring Distilled Products, Inc.
Continental Distilling Corp., d.b.a. Cornwell Distillers Co., Philadelphia, Pa. 733,158, canc. Cl. 49.
Continental-Vogue Luggage Co., San Francisco, Calif. 853,923, pub. 5-21-68. Cl. 3.
Cordis Corp., Miami, Fla. 854,242, pub. 5-21-68. Cl. 44.
Cordovan Associates, Inc., Dayton, Ohio. 854,177-8, pub. 5-21-68. Cl. 35.
Corn Products Co.: *See*—
Corn Products Refining Co.
Scull, Wm. S., Co.
Corn Products Refining Co., to Corn Products Co., New York, N.Y. 241,991, ren. 8-6-68. Cl. 5.
Corn Products Refining Co., to Corn Products Co., New York, N.Y. 245,427, ren. 8-6-68. Cl. 46.
Cornhill Commercial Co.: *See*—
Touloukian, Hagop S.
Cornwell Distillers Co.: *See*—
Continental Distilling Corp.
Cory Corp., Chicago, Ill. 503,902, ren. 8-6-68. Cl. 34.
Costa Ice Cream Co., Woodbridge, N.J. 854,281, pub. 5-21-68. Cl. 46.
Craddock-Terry Shoe Corp., Lynchburg, Va. 503,628, ren. 8-6-68. Cl. 39.
Craft Master Corp., from Craft Master Corp., Toledo, Ohio. 854,061, pub. 5-21-68. Cl. 22.
Cragsmoor Craftsmen, The: *See*—
Howell, William R.
Crane Co.: *See*—
Chapman Valve Mfg. Co., The.
Crane Co., New York, N.Y. 854,122, pub. 5-21-68. Cl. 26.
Crocker, H. S., Co., Inc., d.b.a. California Artists, San Bruno, Calif. 854,206-7, pub. 5-21-68. Cl. 38.
Crown Zellerbach Corp., San Francisco, Calif. 732,901, canc. Cl. 6.
Curley Co., Inc., Camden, N.J. 854,317, pub. 5-21-68. Cl. 51.
Curtis, Helene, Industries, Inc., d.b.a. Kings Men, Chicago, Ill. 854,308, pub. 5-21-68. Cl. 51.

Daffin, Irl, Associates, Inc., d.b.a. National Concrete Machinery Co., Lancaster, Pa. 854,111, pub. 5-21-68. Cl. 23.
Dayco Corp., Dayton, Ohio. 854,160, pub. 5-21-68. Cl. 32.
Dayton Perforators Inc., Dayton, Ohio. 854,086, pub. 5-21-68. Cl. 23.
De Guingand, Jack, (Agencies) Ltd., Middlesex, England. 853,954, pub. 5-21-68. Cl. 8.
Dejur-Amsco Corp., Long Island City, N.Y. 726,477, canc. Cl. 26.
Derby Campers Ltd., Inc., Elkhart, Ind. 854,030, pub. 5-21-68. Cl. 19.
Deseret Pharmaceutical Co., Inc., Sandy, Utah. 854,246, pub. 5-21-68. Cl. 44.
Des. & Mfr., Inc., Philadelphia, Pa. 718,539, canc. Cl. 23.
De Soto, Inc.: *See*—
Chattanooga Implement & Mfg. Co.
Det Norske Aktieselskab for Elektrokemisk Industri, to Elektrokemisk A/S, Oslo, Norway. 438,894, ren. 8-6-68. Cl. 34.
Devoe & Raynolds Co., Inc., by Celanese Coatings Co., New York, N.Y. 403,959, 12(c) pub. 8-6-68. Cl. 16.
Dexter Press Inc.: *See*—
Alliance Mfg. Co., Inc.
Dial Shoe Co., Inc., Philadelphia, Pa. 733,123, canc. Cl. 39.
Dial-A-Gift Inc., Newport Beach, Calif. 854,350, pub. 5-21-68. Cl. 101.
Diamond Shamrock Corp., d.b.a. Nopco Chemical Co., Cleveland, Ohio. 853,931, pub. 5-21-68. Cl. 5.
Diana Stores Corp., North Bergen, N.J. 854,210, pub. 5-21-68. Cl. 39.
Dick, A. B., Co., Niles, Ill. 725,336, canc. Cl. 26.
Dictograph Products Co., Inc., New York, N.Y., by Dictograph Products, Inc., Danbury, Conn. 327,994, 12(c) pub. 8-6-68. Cl. 21.
Dictograph Products, Inc.: *See*—
Dictograph Products Co., Inc.
Diebold, Inc., Canton, Ohio. 854,116-17, pub. 5-21-68. Cl. 25.
Di Gaeta Ottavio E Poggioli Aliero, Salerno, Italy. 733,184, canc. Cl. 46.
Dixon, Jeane L., Washington, D.C. 721,033-5, canc. Cl. 38.
Dodgen Industries, Inc., Humboldt, Iowa. 854,381. Cl. 23.
Dole Co.: *See*—
Castle & Cooke, Inc.
Dorsey Trailer, Inc.: *See*—
Dorsey Trailers.
Dorsey Trailers, to Dorsey Trailer, Inc., Elba, Ala. 502,965, ren. 8-6-68. Cl. 19.
Dow Chemical Co., The, Midland, Mich. 732,888, canc. Cl. 2.
Duffens Optical Co., d.b.a. Precision Coating Service, Topeka, Kans. 854,366, pub. 5-21-68. Cl. 106.
Duffy-Mott Co., Inc.: *See*—
Pratt-Low Preserving Co.
Duffy-Mott Co., Inc., New York, N.Y. 854,274, pub. 5-21-68. Cl. 46.
Dunlop Tire & Rubber Corp., Buffalo, N.Y. 795,945, canc. Cl. 22.
Duralith Publishing Co., Philadelphia, Pa. 733,178, canc. Cl. 38.
Dynamit Nobel Aktiengesellschaft, Troisdorf, Germany. 853,904, pub. 5-21-68. Cl. 1.
E.T.M. Corp., Monrovia, Calif. 854,096, pub. 5-21-68. Cl. 23.
East Coast Food Corp., Riverhead, N.Y. 854,251, pub. 5-21-68. Cl. 46.
Easy Walker Shoe Co.: *See*—
Ideal Shoe Co.
Eaton, Glenn A., d.b.a. Parfums Duvelle, Portland, Ore. 854,321, pub. 5-21-68. Cl. 51.
Eaton Yale & Towne Inc., Cleveland, Ohio. 853,995, pub. 5-21-68. Multiple Class (Classes 14, 19, 23, 31, and 34).
Ebnersons Associates: *See*—
Foto-Cube, Inc.
Economy Engineering Co., Chicago, Ill. 853,993, pub. 5-21-68. Cl. 13.
Edroy Products Co., Inc.: *See*—
Herbert, Edward J.
Eisai Co., Ltd., Tokyo, Japan. 854,025, pub. 5-21-68. Cl. 18.
El Burrito, Inc., Birmingham, Ala. 854,340, pub. 5-21-68. Cl. 100.
Electric Machinery Mfg. Co., Minneapolis, Minn. 721,256, canc. Cl. 21.
Electro Manganese Corp., Knoxville, Tenn., by Foote Mineral Co., Exton, Pa. 399,190, 12(c) pub. 8-6-68. Cl. 14.
Elektrokemisk A/S: *See*—
Det Norske Atieselskab for Elektrokemisk Industri.
El Morro Food Distributors Inc., New York, N.Y. 733,155, canc. Cl. 46.
Elysee Cosmetic Mfg. Co., San Francisco, Calif. 434,902, ren. 8-6-68. Cl. 51.
Empire Coatings & Chemical Co., Denver, Colo. 732,984, canc. Cl. 16.
Endicott Johnson Corp., Endicott, N.Y. 854,213, pub. 5-21-68. Cl. 39.
Enterprise Mfg. Co., The, to Pflueger Corp., Akron, Ohio. 250,007, ren. 8-6-68. Cl. 22.
Enterprise Paint Mfg. Co., Chicago, Ill. 854,005, pub. 5-30-67. Multiple Class (Classes 16 and 52).
Erwin, Henry P., Jr., d.b.a. Precision Field Coil Co., Culver City, Calif. 854,038, pub. 5-21-68. Cl. 21.
Ets. C. Berger & Cie. S.A., by C. Berger & Cie, S.A., Marseille, France. 313,402, 12(c) pub. 8-6-68. Cl. 49.
Evan-Picone, Inc., N. Bergen, N.J. 854,224, pub. 5-21-68. Cl. 39.
Eye-Ful Lingerie Inc., New York, N.Y., by Sam & Ruth Enterprises, Inc., Westport, Conn. 437,755, 12(c) pub. 8-6-68. Cl. 39.
F & F Laboratories, Inc.: *See*—
Organ-Iron Laboratories.
Fab-Con Machinery Development Corp., Paterson, N.J. 854,089, pub. 5-21-68. Cl. 23.
Falcon Lock Co., S. Gate, Calif. 733,170, canc. Cl. 25.
Farbenfabriken Bayer Aktiengesellschaft, Leverkusen, Germany. 853,949, pub. 5-21-68. Cl. 6.
Farmers Tool & Supply Corp., Denver, Colo. 732,998, canc. Cl. 19.
Federal Container Co., Philadelphia, Pa., to Fibreboard Corp., San Francisco, Calif. 243,215, ren. 8-6-68. Cl. 37.
Federal Container Co., Philadelphia, Pa., to Fibreboard Corp., San Francisco, Calif. 243,509, ren. 8-6-68. Cl. 2.
Federal Intermediate Credit Bank of St. Paul, St. Paul, Minn. 854,357, pub. 5-21-68. Cl. 101.
Federated Research Corp., Pittsburgh, Pa. 854,361, pub. 5-21-68. Cl. 102.
Fedtro, Inc., Rockville Centre, N.Y. 854,199, pub. 5-21-68. Cl. 38.
Ferrero, P., & C. S.p.A., Alba, Cuneo, Italy. 854,284, pub. 5-21-68. Cl. 46.
Fibreboard Corp.: *See*—
Federal Container Co.
Fifer Industries, Inc., Louisville, Ky. 854,112, pub. 5-21-68. Cl. 23.
Filatures Prouvost Masurel & Cie, La Lainiere De Roubaix, from Filatures Prouvost & Cie, La Lainiere De Roubaix, Roubaix (Nord), France. 854,234, pub. 5-21-68. Cl. 43.
Firearms International Corp., Washington, D.C. 853,962, pub. 5-21-68. Cl. 9.
Firestone Tire & Rubber Co., The, Akron, Ohio. 732,924, canc. Cl. 12.
Firestone Tire & Rubber Co., The, Akron, Ohio. 853,895, pub. 5-21-68. Cl. 1.
Flavor Tree Foods Co.: *See*—
Philip Morris Inc.
Flents Products Co., Inc., New York, N.Y. 854,228, pub. 5-21-68. Cl. 40.
Flip-Mop, Inc., Northvale, N.J. 854,146, pub. 5-21-68. Cl. 29.
Flip-Mop, Inc., Rosedale, N.Y. 854,386. Cl. 29.
Folienfabrik Forchheim, G.m.b.H., Zweibruckenstrasse, Germany. 854,190, pub. 5-21-68. Cl. 37.
Food Industries Corp., Dallas, Tex. 854,271, pub. 5-21-68. Cl. 46.
Foote Mineral Co.: *See*—
Electro Manganese Corp.
Forbes Labeltape Co., Grand Rapids, Mich. 854,378. Cl. 23.
Foremost-McKesson, Inc., d.b.a. Genetec Hospital Supply Co., New York, N.Y. 854,223, pub. 5-21-68. Cl. 39.
Foseco International Ltd., Birmingham, England. 853,944, pub. 5-21-68. Cl. 6.
Foster-Milburn Co., Buffalo, N.Y. 854,026, pub. 5-21-68. Cl. 18.
Foto-Cube, Inc., from Ebnersons Associates, Chelmsford, Mass. 854,294, pub. 5-21-68. Cl. 50.
Fownes Bros. & Co., London, England, to Fownes Bros. & Co., Inc., New York, N.Y. 70,324, ren. 8-6-68. Cl. 40.
Fownes Bros. & Co., Inc.: *See*—
Fownes Bros. & Co.
Frankell Mfg. Co., Inc., Jersey City, N.J. 733,093, canc. Cl. 32.
Franklin, Thomas, d.b.a. Canoga Mfg., Los Angeles, Calif. 733,055, canc. Cl. 23.
Friedman, Robert, Associates, Inc., Cleveland, Ohio. 854,123, pub. 5-21-68. Cl. 26.
Frost, H., & Co. Ltd., Walsall, England. 854,161, pub. 5-21-68. Cl. 34.
Fund American Investment Management Co., from North American Securities Co., San Francisco, Calif. 854,360, pub. 5-21-68. Cl. 102.
G-J Custom: *See*—
Tanzini, Guido J.
G & K, New York, N.Y. 854,062, pub. 5-21-68. Cl. 22.
Gasser Chair Co., The, Youngstown, Ohio. 854,159, pub. 5-21-68. Cl. 32.
Gem-Dandy Garter Co., by Gem-Dandy, Inc., Madison, N.C. 247,541, 12(c) pub. 8-6-68. Cl. 39.
Gem-Dandy, Inc.: *See*—
Gem-Dandy Garter Co.
Gem-Dandy, Inc., Madison, N.C. 853,922, pub. 5-21-68. Cl. 3.
General Cigar Co., Inc., New York, N.Y. 854,014, pub. 5-21-68. Cl. 17.
General Crafts Corp., Baltimore, Md. 854,301, pub. 5-21-68. Cl. 50.
General Electric Co., Louisville, Ky. 854,115, pub. 5-21-68. Cl. 24.
General Foods Corp., New York, N.Y. 854,275, pub. 5-21-68. Cl. 46.
General Latex & Chemical Corp., Cambridge, Mass. 853,898, pub. 5-21-68. Cl. 1.
General Phonograph Corp., to Okeh Phonograph Corp., to Columbia Broadcasting System, Inc., New York, N.Y. 243,826, ren. 8-6-68. Cl. 36.
General Refractories Co., Philadelphia, Pa. 281,625, 12(c) pub. 8-6-68. Cl. 12.
General Refractories Co., Philadelphia, Pa. 853,975, pub. 5-21-68. Cl. 12.
General Time Corp., Stamford, Conn. 854,121, pub. 5-14-68. Cl. 26.
General Tire & Rubber Co., The, Akron, Ohio. 854,170, pub. 5-21-68. Cl. 35.
General Tire & Rubber Co., The, Akron, Ohio. 854,179, pub. 5-21-68. Cl. 35.
Genetec Hospital Supply Co.: *See*—
Foremost-McKesson, Inc.
Georgia-Pacific Corp., Portland, Oreg. 853,976-7, pub. 5-21-68. Cl. 12.
Gibson Wine Co., Covington, Ky. 854,287, pub. 5-21-68. Cl. 47.
Gillette Co., The, Boston, Mass. 854,322, pub. 5-21-68. Cl. 51.

Gilmore Industrial Grinders, Inc., Houston, Tex. 733,036, canc. Cl. 23.

Gimelstein, Zelick, Miami Beach, Fla. 854,008, pub. 5–21–68. Cl. 17.

Golden, A. J., Inc.: *See*—
Golden, Augustus J.

Golden, Augustus J., Baltimore, Md., to A. J. Golden, Inc., York, Pa. 501,101, ren. 8–6–68. Cl. 17.

Golden Crest Records, Inc., Huntington Station, N.Y. 854,184, pub. 5–21–68. Cl. 36.

Goldsmith, Oliver, d.b.a. Oliver Goldsmith Exterminating Co., to Oliver Goldsmith Co., Inc., Waco, Tex. 434,870, ren. 8–6–68. Cl. 6.

Goldsmith, Oliver, Co., Inc.: *See*—
Goldsmith, Oliver.

Goldsmith, Oliver, Exterminating Co.: *See*—
Goldsmith, Oliver.

Goodrich, B. F., Co., The, Akron, Ohio. 854,093, pub. 5–21–68. Cl. 23.

Gorham Corp.: *See*—
Textron, Inc.

Gould-Mersereau Co., Inc., The, New York, N.Y. 853,990, pub. 5–21–68. Cl. 13.

Grayarc Co., Inc., Brooklyn, N.Y. 854,187, pub. 5–21–68. Cl. 37.

Great Atlantic & Pacific Tea Co., Inc., The: *See*—
Great Atlantic & Pacific Tea Co.

Great Atlantic & Pacific Tea Co., The, to The Great Atlantic & Pacific Tea Co., Inc., New York, N.Y. 500,069, ren. 8–6–68. Cl. 46.

Great Atlantic & Pacific Tea Co., The, to The Great Atlantic & Pacific Tea Co., Inc., New York, N.Y. 500,137, ren. 8–6–68. Cl. 46.

Great Atlantic & Pacific Tea Co., The, to The Great Atlantic & Pacific Tea Co., Inc., New York, N.Y. 500,609–10, ren. 8–6–68. Cl. 46.

Great Atlantic & Pacific Tea Co., The, to The Great Atlantic & Pacific Tea Co., Inc., New York, N.Y. 500,614, ren. 8–6–68. Cl. 46.

Great Atlantic & Pacific Tea Co., Inc., The, New York, N.Y. 854,277, pub. 5–21–68. Cl. 46.

Great Lakes Paint & Varnish Co., Chicago, Ill. 732,971–4, canc. Cl. 16.

Green Colonial, Inc., Des Moines, Iowa. 854,169, pub. 5–21–68. Cl. 34.

Green Hammer Metal Products Co., Newark, N.J. 733,032, canc. Cl. 23.

Greif Bros. Cooperage Corp., The, Delaware, Ohio. 853,905, pub. 5–21–68. Cl. 2.

Greif Bros. Cooperage Corp., The, Delaware, Ohio. 853,912, pub. 5–21–68. Cl. 2.

Griffin Mfg. Co., Inc., to American Home Products Corp., New York, N.Y. 244,302, ren. 8–6–68. Cl. 32.

Grocery Foods Corp., Glendale, N.Y. 854,260, pub. 5–21–68. Cl. 46.

Guardian Products Co., Inc., North Hollywood, Calif. 854,240, pub. 5–21–68. Cl. 44.

Gulf Oil Corp.: *See*—
Olsen, Afred, & Co. A/S.

Gulf States Paper Corp., Tuscaloosa, Ala. 853,919, pub. 5–21–68. Cl. 2.

Hallmark Cards, Inc., Kansas City, Mo. 853,917, pub. 5–21–68. Cl. 2.

Hallmark Cards, Inc., Kansas City, Mo. 854,197, pub. 5–21–68. Cl. 38.

Hamilton Watch Co., Lancaster, Pa. 854,142, pub. 5–21–68. Cl. 28.

Hanes Corp.: *See*—
Hanes, P. H., Knitting Co.

Hanes, P. H., Knitting Co., to Hanes Corp., Winston-Salem, N.C. 242,945, ren. 8–6–68. Cl. 39.

Hansen, Marybeth, Westboro, Mass. 854,370, pub. 5–21–68. Cl. 107.

Harbin, Clyde A., Whitehaven, Tenn. 854,387. Cl. 46.

Harries, John O., d.b.a. Harries Microphysics Ltd., Warwick, Bermuda. 733,007, canc. Cl. 21.

Harries Microphysics Ltd.: *See*—
Harries, John O.

Harrold, W. L., Co.: *See*—
Harrold, Willis L.

Harrold, Willis L., d.b.a. W. L. Harrold Co., Mishawaka, Ind. 733,014, canc. Cl. 21.

Harvey, Hazel E., Appomattox, Va. 854,070, pub. 5–21–68. Cl. 22.

Herbert, Edward J., d.b.a. Edroy Products Co., to Edroy Products Co., Inc., New York, N.Y. 439,041, ren. 8–6–68. Cl. 26.

Hess Oil & Chemical Corp., Perth Amboy, N.J. 832,088, canc. Cl. 15.

Hicklin GM Diesel, Inc., Des Moines, Iowa. 854,050, pub. 5–21–68. Multiple Class (Classes 21 and 103).

Highland Engineering & Molding Co., Milnesville, Pa. 733,161, canc. Cl. 50.

Hogarth, Douglas, Ltd., Ontario, Canada. 854,327, pub. 5–21–68. Cl. 52.

Hopkins, Ferdinand T., d.b.a. Ferd. T. Hopkins & Son, New York, N.Y. 341,170, 12(c) pub. 8–6–68. Cl. 51.

Hopkins, Ferd. T., & Son: *See*—
Hopkins, Ferdinand T.

Horner Sales Corp., Pittsburgh, Pa. 854,261, pub. 5–21–68. Cl. 46.

Hornor, Thomas H., d.b.a. Bud Type Cleaner Co., Timonium, Md. 733,183, canc. Cl. 44.

Howell, William R., d.b.a. The Cragsmoor Craftsmen, Cragsmoor, N.Y. 853,972, pub. 5–21–68. Multiple Class (Classes 12, 34, 37, and 42).

Hubley Mfg. Co., The, Lancaster, Pa. 733,168, canc. Cl. 22.

Huki Lau Corp., Holly, Mich. 854,259, pub. 5–21–68. Cl. 46.

Humanese Communication Council, New York, N.Y. 854,205, pub. 5–21–68. Cl. 38.

Hume Corp., Columbus, Ohio. 853,891, pub. 5–21–68. Cl. 1.

Huntington Laboratories, Inc., Huntington, Ind. 504,071, ren. 8–6–68. Cl. 6.

Huntleys of Lancaster, Inc., Lancaster, Pa. 854,258, pub. 5–21–68. Cl. 46.

Hunt-Wesson Foods, Inc.: *See*—
Southern Cotton Oil Co., The.

Hygrade Food Products Corp., Detroit, Mich. 854,282, pub. 5–21–68. Cl. 46.

Ideal Toy Corp., Hollis, N.Y. 854,055, pub. 5–21–68. Cl. 22.

Ideal Toy Corp., Hollis, N.Y. 854,075–80, pub. 5–21–68. Cl. 22.

Ideal Toy Corp., Hollis, N.Y. 854,082, pub. 5–21–68. Cl. 22.

Illes, A. E., Co., Dallas, Tex. 436,621, 12(c) pub. 8–6–68. Cl. 46.

Industrial Acoutics Co., Inc., Bronx, N.Y. 854,092, pub. 5–21–68. Cl. 23.

Inglis, John, Co. Ltd., Ontario, Canada. 733,025, canc. Cl. 23.

Inland Steel Products Co., Milwaukee, Wis. 854,375. Cl. 12.

International Automotive Service Industries Show, Chicago, Ill. 854,356, pub. 5–21–68. Cl. 101.

International Electronic Research Corp., Burbank, Calif. 854,048, pub. 5–21–68. Cl. 21.

International Flavors & Fragrances Inc., New York, N.Y. 853,935, pub. 5–21–68. Multiple Class (Classes 6, 46, and 51).

International Lubricant Corp., New Orleans, La. 854,003, pub. 5–21–68. Cl. 15.

International Medical Supply, Inc., Waltham, Mass. 854,328, 5–21–68. Cl. 52.

International Shoe Co., St. Louis, Mo. 733,181, canc. Cl. 39.

Ideal Shoe Co., from Easy Walker Shoe Co., Philadelphia, Pa. 854,208, pub. 5–21–68. Cl. 39.

International Telephone & Telegraph Corp., Chicago, Ill. 733,008, canc. Cl. 21.

Isocyanate Products, Inc., New Castle, Del. 853,900, pub. 5–21–68. Cl. 1.

Jackson & Perkins Co., Medford, Ore. 853,896–7, pub. 5–21–68. Multiple Class (Classes 1, 6, and 10).

Jamison, Inc., Torrance, Calif. 854,066–7, pub. 5–21–68. Cl. 22.

Janssen, Robert L., d.b.a. Product Development & Mfg. Co., Mendota, Minn. 854,148, pub. 5–21–68. Cl. 29.

Jeffrey Gallon Mfg. Co., Columbus, Ohio. 853,999, pub. 5–21–68. Cl. 14.

Jessop, William, & Sons Ltd., to Jessop-Saville Ltd., Sheffield, England. 435,245, ren. 8–6–68. Cl. 14.

Jessop-Sarville Ltd.: *See*—
Jessop, William, & Sons Ltd.

Johnson, Ernest E., d.b.a. Ernest E. Johnson Co., Minneapolis, Minn., by Ernest E. Johnson Co., Inc., Davenport, Iowa. 327,959, 12(c) pub. 8–6–68. Cl. 18.

Johnson, Ernest E., Co.: *See*—
Johnson, Ernest E.

Kabat, Edwin R., Ltd., New York, N.Y. 854,057, pub. 5–21–68. Cl. 22.

Kal-Equip Co., Otsego, Mich. 854,126, pub. 5–21–68. Cl. 26.

Kastrup og Holmegaards Glasvaerker A/S: *See*—
Akts. Holmegaards Glasvaerk.

Kayser-Roth Corp., New York, N.Y. 854,214, pub. 5–21–68. Cl. 39.

Keating of Chicago, Inc., Chicago, Ill. 854,151, pub. 5–21–68. Cl. 31.

Kebow, Dudley, Inc., Los Angeles, Calif. 733,060, canc. Cl. 23.

Kelly-Springfield Tire Co., The, Cumberland, Md. 854,173–4, pub. 5–21–68. Cl. 35.

Kennedy Sinclaire, Inc., Montclair, N.J. 854,196, pub. 5–21–68. Cl. 38.

Kenner Products Co., Cincinnati, Ohio. 854,071, pub. 5–21–68. Cl. 22.

Kentmaster Mfg. Co., Inc., Los Angeles, Calif. 854,379. Cl. 23.

Kessler, William B., Inc., Hammonton, N.J. 504,122, ren. 8–6–68. Cl. 39.

Kewanee Boiler Corp., Kewanee, Ill., to American Standard Inc., New York, N.Y. 503,115, ren. 8–6–68. Cl. 34.

Kidde, Walter, & Co., Inc., Belleville, from Kidde Ultrasonic & Detection Alarms, Inc., Clifton, N.J. 721,302, canc. Cl. 26.

Kidde Ultrasonic & Detection Alarms, Inc.: *See*—
Kidde, Walter, & Co., Inc.

King Laboratories: *See*—
Watkins Products, Inc.

King Refrigerator Corp., Glendale, N.Y. 854,152, pub. 5–21–68. Multiple Class (Classes 31 and 34).

Kings Men: *See*—
Curtis, Helene, Industries, Inc.

Knapp Monarch Co., St. Louis, Mo. 854,044, pub. 5–21–68. Cl. 21.

Kohler & Campbell, Inc., Granite Falls, N.C. 503,462, ren. 8–6–68. Cl. 36.

Kolmar Mfg. Co., Chicago, Ill. 733,092, canc. Cl. 32.

Kresge, S. S., Co., Detroit, Mich. 854,232–3, pub. 5–21–68. Cl. 42.

Kyp-Go, Inc., West Chicago, Ill. 854,053, pub. 5–21–68. Cl. 21.

Lambert, Louis, Laboratories, El Paso, Tex. 854,305, pub. 5–21–68. Cl. 51.

Lamson & Sessions Co., The, Cleveland, Ohio. 853,983–4, pub. 5–21–68. Cl. 13.

Lanman & Kemp-Barclay & Co. Inc.: *See*—
Barclay & Barclay.

Lanman & Kemp-Barclay & Co., Inc., Palisades Park, N.J. 503,202, ren. 8–6–68. Cl. 51.

Lathan Mfg. Co., Redwood City, Calif. 854,106, pub. 5–21–68. Cl. 23.

Leblond, R. K., Machine Tool Co., The, Cincinnati, Ohio. 503,868, ren. 8–6–68. Cl. 23.

Legendre Co.: *See*—
Sazerac Co., Inc.

Lehon Co., The, Chicago, Ill., by Philip Carey Corp., Cincinnati, Ohio. 440,153, 12(c) pub. 8–6–68. Cl. 12.

Leon Products, Inc., Jacksonville, Fla. 854,316, pub. 5–21–68. Cl. 51.

Le Voy's Inc., Salt Lake City, Utah. 854,243, pub. 5–21–68. Cl. 44.

Lewis, G. B., Co., Watertown, Wis. 853,916, pub. 5–21–68. Cl. 2.

Liberty Distributors, Des Plaines, Ill. 854,028, pub. 5–21–68. Multiple Class (Classes 19 and 22).

Liberty Records, Inc., Los Angeles, Calif. 854,185, pub. 5–21–68. Cl. 36.

Liggett & Myers Tobacco Co., New York, N.Y. 854,017, pub. 5–21–68. Cl. 17.

Lisbeth Whiting Co., Inc., Jamaica, N.Y. 854,064, pub. 5–21–68. Cl. 22.

Llords & Elwood Winery, Los Angeles, Calif. 850,720, cor. Cl. 47.

Lochhead Distributing Co., Overland, Mo. 853,974, pub. 5–21–68. Cl. 12.

Londontown Mfg. Co., The, Baltimore, Md. 854,220, pub. 5–21–68. Cl. 39.

Louket Markets Inc., Jersey City, N.J. 854,358, pub. 5–21–68. Cl. 101.

Luitpold-Werk, Munchen, Germany. 854,021, pub. 5–21–68. Cl. 18.

MB Associates, San Ramon, Calif. 853,957, pub. 5–21–58. Cl. 9.

MacAndrews & Forbes Co., Camden, N.J. 854,193, pub. 5–21–68. Cl. 37.

Madson Mfg. Co., Inc., Rhinelander, Wis. 854,105, pub. 5–21–68. Cl. 23.

Magazine Management Co., d.b.a. Marvel Comics Group, New York, N.Y. 854,204, pub. 5–21–68. Cl. 38.

Magnetics, Inc., East Butler, Pa. 854,295, pub. 5–21–68. Cl. 50.

Maidenform, Inc., New York, N.Y. 854,226–7, pub. 5–21–68. Cl. 39.

Manette, Inc., Minneapolis, Minn. 854,347, pub. 5–21–68. Cl. 101.

Manholes, Inc., Fort Wayne, Ind. 732,934, canc. Cl. 12.

Mannington Mills Inc., Salem, N.J. 266,136, cor. Cl. 20.

Mannington Mills Inc., Salem, N.J. 555,445, cor. Cl. 20.

Mannington Mills Inc., Salem, N.J. 564,090, cor. Cl. 20.

Mannington Mills Inc., Salem, N.J. 571,278, cor. Cl. 20.

Mannington Mills Inc., Salem, N.J. 599,853, cor. Cl. 12.

Mannington Mills Inc., Salem, N.J. 657,684, cor. Cl. 20.

Mansfield Industries, Inc., Chicago, Ill. 733,172, canc. Cl. 26.

Manufacturas Del Vestido S.A., Madrid, Spain, from Tri Sportswear, Inc., New York, N.Y. 854,216, pub. 7–25–67. Cl. 39.

Marathon Corp., Rothschild, Wis., to American Can Co., New York, N.Y. 503,191, ren. 8–6–68. Cl. 6.

Maremont Marketing, Inc.: *See*—
Maremont Corp.

Maremont Corp., d.b.a. Maremont Marketing, Inc., Chicago, Ill. 854,153, pub. 5–21–68. Cl. 31.

Marolf Hygienic Equipment, Inc., Toledo, Ohio. 854,097, pub. 5–21–68. Cl. 23.

Martin-Marietta Corp., New York, N.Y. 853,913, pub. 5–21–68. Cl. 2.

Martin-Marietta Corp., New York, N.Y. 853,914, pub. 5–21–68. Cl. 2.

Marubeni-Iida (America), Inc., New York, N.Y. 733,145, canc. Cl. 43.

Marvel Comics Group: *See*—
Magazine Management Co.

Maryland Cup Corp., Owings Mills, Md. 853,915, pub. 5–21–68. Cl. 2.

Mason Appelt Space Structures, Houston, Tex. 853,971, pub. 5–21–68. Cl. 12.

Masury-Columbia Co., Melrose Park, Ill. 853,911, pub. 5–21–68. Cl. 2.

Matchless Metal Polish Co., The, Chicago, Ill. 503,359, ren. 8–6–68. Cl. 4.

Mattel, Inc., Hawthorne, Calif. 854,072, pub. 5–21–68. Cl. 22.

Mattel, Inc., Hawthorne, Calif. 854,081, pub. 5–21–68. Cl. 22.

Mattel, Inc., Hawthorne, Calif. 854,302, pub. 5–21–68. Cl. 50.

Max the Printer, Inc., Indianapolis, Ind. 854,354, pub. 5–21–68. Cl. 101.

McCord Corp., Detroit, Mich. 732,914, canc. Cl. 12.

McGraw-Edison Co., Elgin, Ill. 733,069, canc. Cl. 24.

Merchandising International S.A., Geneva, Switzerland. 854,154–5, pub. 5–21–68. Cl. 32.

Mercantile Stores Co., Inc., Wilmington, Del. 854,342–3, pub. 5–21–68. Cl. 100.

Merck & Co., Inc.: *See*—
Mulford, H. K., Co.

Metallurgica Feltrina S.p.A., Milan, Italy. 732,956, canc. Cl. 14.

Metropolitan Refining Co., Inc., Long Island City, N.Y. 503,860, ren. 8–6–68. Cl. 6.

Meyer, Joseph H., Bros., by The Richelieu Corp., New York, N.Y. 400,508, 12(c) pub. 8–6–68. Cl. 28.

Meyer, Louis J., Inc., Philadelphia, Pa. 733,202, canc. Cl. 106.

Minetti & Cia. Ltda. Sociedad Anonima Industrial y Comercial, Santa Fe, Argentina. 854,253, pub. 5–21–68. Cl. 46.

Minnesota Mining & Mfg. Co., St. Paul, Minn. 854,133, pub. 5–21–68. Cl. 26.

Minnesota Mining & Mfg. Co., St. Paul, Minn. 854,247–8, pub. 5–21–68. Cl. 44.

Mobil Oil Corp., New York, N.Y. 853,909, pub. 5–21–68. Cl. 2.

Modernair Corp., Bryan, Ohio, from Modernair Corp., San Leandro, Calif. 733,056, canc. Cl. 23.

Molner, Duke, Wholesale Liquor Co., Inc., Los Angeles, Calif. 854,291, pub. 5–21–68. Cl. 48.

Monsanto Chemical Co., to PPG Industries, Inc., Pittsburgh, Pa. 500,470, ren. 8–6–68. Cl. 6.

Montecrispi Cigar Co., Inc., Miami Beach, Fla. 854,009, pub. 5–21–68. Cl. 17.

More, George W., Inc., Waltham, Mass. 732,942, canc. Cl. 13.

Moore, John H., Inc., New York, N.Y., to Sasieni Ltd., London, England. 503,852, ren. 8–6–68. Cl. 8.

Morden Machines Co., Portland, Ore. 854,090, pub. 5–21–68. Cl. 23.

Morehouse Mfg. Co., d.b.a. The Shaving Powder Co., to Carson Chemical Co., Savannah, Ga. 500,532. Am. 7(d). Cl. 51.

Morgan Crucible Co. Ltd., The, London, England. 854,135, pub. 5–21–68. Cl. 26.

Morris, Philip, Inc., New York, N.Y. 854,007, pub. 5–21–68. Cl. 17.

Morris, Philip, Inc., New York, N.Y. 854,015, pub. 5–21–68. Cl. 17.

Morris, Philip, Inc., d.b.a. Flavor Tree Foods Co., New York, N.Y. 854,285–6, pub. 5–21–68. Cl. 46.

Morton International, Inc.: *See*—
Ohio Salt Co., The.

Mulford, H. K., Co., Philadelphia, Pa., to Merck & Co., Inc., Rahway, N.J. 249,763, ren. 8–6–68. Cl. 18.

Murray Co. of Texas, Inc.: *See*—
Boston Gear Works, Inc.

Murray Corp., Cockeysville, Md. 854,091, pub. 5–21–68. Cl. 23.

National Chemical Co., Odessa, Tex. 854,046, pub. 5–21–68. Cl. 21.

National Concrete Machinery Co.: *See*—
Daffin, Irl, Associates, Inc.

National Dairy Products Corp., Chicago, Ill. 854,262, pub. 2–27–68. Cl. 46.

National Flaxseed Processors Association, Washington, D.C. 854,334, pub. 5–21–68. Cl. 100.

National Furniture Mfg. Co., Inc., Evansville, Ind. 854,157, pub. 5–21–68. Cl. 32.

National Medical Products Corp.: *See*—
Altone Chemical Co., Inc.

National Personnel Consultants, Detroit, Mich. 854,373–4, pub. 5–21–68. Cl. 200.

National Service Industries, Inc., Atlanta, Ga. 854,329, pub. 5–21–68. Cl. 52.

Naugatuck Chemical Co., The, by Uniroyal, Inc., New York, N.Y. 246,347, 12(c) pub. 8–6–68. Cl. 6.

Naugatuck Chemical Co., The, by Uniroyal, Inc., New York, N.Y. 246,413, 12(c) pub. 8–6–68. Cl. 6.

Nedlog Co., The, Chicago, Ill. 439,089, ren. 8–6–68. Cl. 45.

New England Fish Co.: *See*—
Stanley, Wm. H., Inc.

New Machine Products Inc., Yonkers, N.Y. 733,043, canc. Cl. 23.

New Orleans Import Co., Ltd., to New Orleans Import Co., Ltd., New Orleans, La. 438,974, ren. 8–6–68. Cl. 46.

New Yorker Magazine, Inc., The, New York, N.Y. 503,688, ren. 8–6–68. Cl. 38.

New Yorker Magazine, Inc., The, New York, N.Y. 504,003, ren. 8–6–68. Cl. 38.

Nicholson File Co., Providence, R.I. 249,815, ren. 8–6–68. Cl. 23.

Nippon Gakki Co., Ltd., Shizuoka Prefecture, Japan. 854,058–9, pub. 5–21–68. Cl. 22.

Nippon Kokan Kabushiki Kaisha, Tokyo, Japan. 853,994, pub. 5–21–68. Cl. 14.

Nopco Chemical Co.: *See*—
Diamond Shamrock Corp.

North American Securities Co.: *See*—
Fund American Investment Management Co.

North Shore Mfg. Co.: *See*—
Patrick, F. A., & Co.

Northern Cap Co., Minneapolis, Minn. 854,211, pub. 5–21–68. Cl. 39.

Novo Industrial Corp., New York, N.Y. 733,095, canc. Cl. 32.

Nutter Engineering Co., Tulsa, Okla. 853,921, pub. 5–21–68. Cl. 2.

Official Films, Inc., New York, N.Y. 733,177, canc. Cl. 38.

Ohio Salt Co., The, Wadsworth, Ohio, to Morton International, Inc., Chicago, Ill. 248,268, ren. 8–6–68. Cl. 46.

Olin Mathieson Chemical Corp., New York, N.Y. 853,964, pub. 5–21–68. Cl. 9.

Olsen, Alfred, & Co. A/S, Copenhagen, Denmark, to Gulf Oil Corp., Pittsburgh, Pa. 438,994, ren. 8–6–68. Cl. 15.

Olsen, Philip T., Royal Oak, Mich. 732,887, canc. Cl. 2.

Omega Louis Brandt et Frere S.A., Bienne, Switzerland. 854,139, pub. 5–21–68. Cl. 27.

Omni Tech, Inc., Santa Monica, Calif. 853,937, pub. 5–21–68. Cl. 6.

Oneida Ltd., Oneida, N.Y. 854,095, pub. 5–21–68. Cl. 23.

Opotow Dental Mfg. Corp., Brooklyn, N.Y. 854,244, pub. 5–21–68. Cl. 44.

Organ-Iron Laboratories, Omaha, Nebr., to F & F Laboratories, Inc., Chicago, Ill. 246,040, ren. 8-6-68. Cl. 18.
Owatonna Tool Co., Owatonna, Minn. 237,653, 12(c) pub. 8-6-68. Cl. 23.
PPG Industries, Inc.: *See*—
  Monsanto Chemical Co.
Pacific Dry Goods Co., The: *See*—
  Yukichi Sakai.
Pacifico: *See*—
  Yukichi Sakai.
Packing Materials Corp., Chicago, Ill. 853,907, pub. 5-21-68. Multiple Class (Classes 2 and 37).
Page One Records Ltd., London, England. 854,183, pub. 5-21-68. Cl. 36.
Palmer Products Inc., Worcester, Pa. 853,968, pub. 5-21-68. Cl. 12.
Palmini Engineering Corp., South San Gabriel, Calif. 733,024, canc. Cl. 23.
Pan-American Drug Co., Inc., to Pan-Tone Drug Co., Jacksonville, Fla. 249,777, ren. 8-6-68. Cl. 18.
Pan-Tone Drug Co.: *See*—
  Pan-American Drug Co., Inc.
Paper Impressions Inc., Des Moines, Iowa. 854,141, pub. 5-21-68. Multiple Class (Classes 28, 39, and 50).
Parfums Duvelle: *See*—
  Eaton, Glenn A.
Paris Precision Products, Los Angeles, Calif. 733,035, canc. Cl. 23.
Patrick, F. A., & Co., by North Shore Mfg. Co., Duluth, Minn. 148,913, 12(c) pub. 8-6-68. Cl. 39.
Payne Mfg. Co., Alta Loma, Tex. 732,981, canc. Cl. 16.
Pedro, Carl, & Sons, Inc., St. Paul, Minn. 853,960-1, pub. 5-21-68. Cl. 9.
Penn Spring Distilled Products, Inc., to Continental Distilling Corp., Philadelphia, Pa. 501,307, ren. 8-6-68. Cl. 49.
Pennsalt Chemicals Corp., from S. S. White Co., Philadelphia, Pa. 854,136-8, pub. 5-21-68. Cl. 26.
Penobscot Shoe Co., Bangor, Maine. 733,121, canc. Cl. 39.
Perfection Mica Co., Chicago, Ill. 722,976, canc. Cl. 14.
Perma Brow, Inc., Los Angeles, Calif. 854,320, pub. 5-21-68. Cl. 51.
Person-To-Person Inc., New York, N.Y. 854,337, pub. 5-21-68. Cl. 100.
Pflueger Corp.: *See*—
  Enterprise Mfg. Co., The.
Pharmaco, Inc.: *See*—
  Schering Corp.
Philadelphia Quartz Co., Philadelphia, Pa. 501,262, ren. 8-6-68. Cl. 6.
Phillips Brush Corp., Cleveland, Ohio. 733,089, canc. Cl. 29.
Piedmont Shirt Co., Greenville, S.C. 733,126, canc. Cl. 39.
Pierce Pre-Cooked Foods, Inc., Moorefield, W. Va. 854,266-9, pub. 5-21-68. Cl. 46.
Pita Hermanos S.A., Pontevedra, Spain. 854,256, pub. 5-21-68. Cl. 46.
Plainfield Headwear, Inc., Plainfield, N.J. 854,215, pub. 5-21-68. Cl. 39.
Plastic Tooling Aids Laboratory, Inc., Bridgeport, Conn. 854,344, pub. 5-21-68. Cl. 100.
Plymouth Rubber Co., Inc., Canton, Mass. 503,216, ren. 8-6-68. Cl. 5.
Poloron Products, Inc., New Rochelle, N.Y. 854,158, pub. 5-21-68. Cl. 32.
Poloron Products, Inc., New Rochelle, N.Y. 854,167, pub. 5-21-68. Cl. 34.
Pond, Robert B., d.b.a. Atom Mfg. Co., to Atom Mfg. Co., Attleboro, to Atom Mfg. Co. Inc., South Attleboro, Mass. 440,721, ren. 8-6-68. Cl. 22.
Popped-Right Corn Co., Marion, Ohio. 854,265, pub. 5-21-68. Cl. 46.
Porteous, Oag, & Co. Ltd., Kent, England. 854,249, pub. 5-21-68. Cl. 45.
Porter, H. K., Co., Inc.: *See*—
  Thermold Co.
Portis Hat Corp.: *See*—
  Portis Style Industries, Inc.
Portis Style Industries, Inc., Chicago, Ill., to Portis Hat Corp., St. Joseph, Mo. 504,099, ren. 8-6-68. Cl. 39.
Posner, I., Inc., Corona, N.Y. 854,313, pub. 5-21-68. Cl. 51.
Power-Plus Battery Co., to Acme Battery Mfg. Co., St. Louis, Mo. 243,032, ren. 8-6-68. Cl. 21.
Pratt-Low Preserving Co., Santa Clara, Calif., to Duffy-Mott Co., Inc., New York, N.Y. 249,358-9, ren. 8-6-68. Cl. 46.
Precision Coating Service: *See*—
  Duffens Optical Co.
Precision Field Coil Co.: *See*—
  Erwin, Henry P., Jr.
Presidents Association, Inc., The, New York, N.Y. 854,200, pub. 5-21-68. Cl. 38.
Price, Rudolph N., Manhasset, N.Y. 854,101, pub. 5-21-68. Cl. 23.
Principle Business Enterprises, Inc., Waterville, Ohio. 854,219, pub. 5-21-68. Cl. 39.
Prinz Brau Carisio S.p.A., Carisio, Vercelli, Italy. 854,290, pub. 5-21-68. Cl. 48.
Process Solvent Co., Inc., d.b.a. The Process Solvent Co., Inc., Kansas City, Kans. 854,325, pub. 5-21-68. Cl. 52.
Product Development & Mfg. Co.: *See*—
  Janssen, Robert I.
Productos de Harina, S.A., Yucatan, Mexico. 854,263, pub. 5-21-68. Cl. 46.
Professional Tape Co., Inc., Riverside, Ill. 854,236-7, pub. 5-21-68. Cl. 44.
Purex Corp., Ltd., Lakewood, Calif. 853,953, pub. 5-21-68. Cl. 6.
Purex Corp., Ltd., Lakewood, Calif. 854,006, pub. 5-21-68. Cl. 16.
Purex Corp., Ltd., Lakewood, Calif. 854,332, pub. 5-21-68. Cl. 52.
Quaker Oats Co., The, Chicago, Ill. 853,932, pub. 5-21-68. Cl. 5.
R & S Distributors, Inc., Miami, Fla. 854,257, pub. 5-21-68. Cl. 46.
Racal Electronics Ltd., from Racal Engineering Ltd., Bracknell, England. 733,013, canc. Cl. 21.
Racal Engineering Ltd.: *See*—
  Racal Electronics Ltd.
Rahberger, Edward J., Dayton, Wash. 854,063, pub. 5-21-68. Cl. 22.
Ralston Purina Co., St. Louis, Mo. 853,941, pub. 5-21-68. Cl. 6.
Ramada Inns, Inc., Phoenix, Ariz. 854,323-4, pub. 5-21-68. Cl. 52.
Red Devil Inc., Union, N.J. 854,145, pub. 5-21-68. Cl. 29.
Reed & Carnrick: *See*—
  Commercial Solvents Corp.
Reed-Joseph Co., Greenville, Miss. 853,908, pub. 5-21-68. Multiple Class (Classes 2, 100, and 103).
Reichhold Chemicals, Inc., White Plains, N.Y. 853,901, pub. 5-21-68. Cl. 1.
Reltool Corp., Toledo, Ohio. 854,094, pub. 5-21-68. Cl. 23.
Renauld International: *See*—
  Renauld International, Ltd.
Renauld International, Ltd., Fitchburg, Mass., from Sea & Ski Corp., d.b.a. Renauld International, Reno, Nev. 854,384. Cl. 26.
Reverence Records, Inc., Baltimore, Md. 854,182, pub. 5-21-68. Cl. 36.
Revson, Charles, Inc., New York, N.Y. 854,304, pub. 55-21-68. Cl. 51.
Rexall Chemical Co.: *See*—
  Rexall Drug & Chemical Co.
Rexall Drug & Chemical Co.: *See*—
  United Drug Co.
Rexall Drug & Chemical Co., d.b.a. Rexall Chemical Co., Los Angeles, Calif. 853,899, pub. 5-21-68. Cl. 1.
Rexall Drug and Chemical Co., d.b.a. Tupperware, Los Angeles, Calif. 854,056, pub. 5-21-68. Cl. 22.
Rexall Drug Co.: *See*—
  United Drug Co.
Reynolds Metals Co., Richmond, Va. 853,906, pub. 5-21-68. Cl. 2.
Reynolds, Wm. A., & Co., Inc., Cleveland, Ohio. 732,944, canc. Cl. 13.
Rice Council for Market Development, Houston, Tex. 854,333, pub. 5-21-68. Cl. 100.
Richardson-Merrell Inc., New York, N.Y. 854,022-4, pub. 5-21-68. Cl. 18.
Richelieu Corp., The: *See*—
  Meyer, Joseph H., Bros.
Ridge Plastics Co., Elyria, Ohio. 732,921, canc. Cl. 12.
Riegel Paper Corp.: *See*—
  Warren Mfg. Co., The.
Rieker & Co., Tuttlingen/Wurttemberg, Germany. 854,218, pub. 5-21-68. Cl. 39.
Riviera Mfg. Co., Inc., Commerce City, Colo. 854,029, pub. 5-21-68. Cl. 19.
Roaring Spring Blank Book Co., Inc., Roaring Spring, Pa. 854,188, pub. 5-21-68. Cl. 37.
Roberts Dental Mfg. Co., Inc.: *See*—
  Shield Mfg., Inc.
Rogers, Charles P., & Co., Inc., Yonkers, N.Y. 733,094, canc. Cl. 32.
Rohm & Haas Co., Philadelphia, Pa. 500,557, ren. 8-6-68. Cl. 6.
Ronson Art Metal Works, Inc., to Ronson Corp., Woodbridge, N.J. 501,891, ren. 8-6-68. Cl. 34.
Ronson Corp.: *See*—
  Ronson Art Metal Works, Inc.
Ronson Corp., Woodbridge, N.J. 854,143, pub. 5-21-68. Cl. 29.
Rosenberg, Morris, d.b.a. St. James Tool Co., St. James, N.Y. 733,045, canc. Cl. 23.
Rosenblatt, D. B., Inc., Minneapolis, Minn. 441,401, ren. 8-6-68. Cl. 39.
Royal Mist Ltd., New York, N.Y. 854,212, pub. 5-21-68. Cl. 39.
Rudd-Melikian, Inc., Hatboro, Pa. 733,167, canc. Cl. 21.
Russell-Thomas Construction Co., Inc., Crane, Tex. 732,931, canc. Cl. 12.
Russer, Max, Inc., Rochester, N.Y. 854,388-9. Cl. 46.
S & S Mfg. Co., to Textron Inc., Providence, R.I. 439,972, ren. 8-6-68. Cl. 28.
St. James Tool Co.: *See*—
  Rosenberg, Morris.
Sakai, Yukichi, d.b.a. The Pacific Dry Goods Co., to Pacifico, San Francisco, Calif. 504,166, ren. 8-6-68. Cl. 22.
Sam & Ruth Enterprises, Inc.: *See*—
  Eye-Ful Lingerie Inc.
Sandberg Travel Bureau, Inc., d.b.a. Sandberg Travel Tours, Los Angeles, Calif. 854,364-5, pub. 5-21-68. Cl. 105.
Sandberg Travel Tours: *See*—
  Sandberg Travel Bureau, Inc.
Sarlo Power Mowers, Inc., Fort Myers, Fla. 854,382. Cl. 23.
Sasieni Ltd.: *See*—
  Moore, John H., Inc.
Sav-A-Fund Corp., Oak Park, Mich. 854,353, pub. 5-21-68. Cl. 101.
Sazerac Co., Inc., d.b.a. Legendre Co., New Orleans, La. 854,292, pub. 5-21-68. Cl. 49.
Schering Corp., Bloomfield by Pharmaco, Inc., Kenilworth, N.J. 434,418, 12(c) pub. 8-6-68. Cl. 51.
Schering Corp., Bloomfield, N.J. 854,019, pub. 5-21-68. Cl. 18.

Schoeneman, J., Inc., Baltimore, by J. Schoeneman, Inc., Owings Mills, Md. 215,422, 12(c) pub. 8-6-68. Cl. 39.
Schoeneman, J., Inc., Baltimore, by J. Schoeneman, Inc., Owings Mills, Md. 219,983, 12(c) pub. 8-6-68. Cl. 39.
Schoeneman, J., Inc., Baltimore, by J. Schoeneman, Inc., Owings Mills, Md. 221,667, 12(c) pub. 8-6-68. Cl. 39.
Schoeneman, J., Inc., Baltimore, by J. Schoeneman, Inc., Owings Mills, Md. 224,602, 12(c) pub. 8-6-68. Cl. 39.
Schoeneman, J., Inc., Baltimore, by J. Schoeneman, Inc., Owings Mills, Md. 229,284-5, 12(c) pub. 8-6-68. Cl. 39.
Schoeneman, J., Inc., Baltimore, by J. Schoeneman, Inc., Owings Mills, Md. 235,579, 12(c) pub. 8-6-68. Cl. 39.
Schoeneman, J., Inc.: *See*—
  Terhune, Yerance & Wolff, Inc.
Scientific Control Corp., Dallas, Tex. 854,041-2, pub. 5-21-68. Multiple Class (Classes 21 and 26).
Scientific, Inc., Rochester, N.Y. 854,127, pub. 5-21-68. Cl. 26.
Scientific-Atlanta, Inc., Doraville, Ga. 854,045, pub. 5-21-68. Cl. 21.
Scull, Wm. S., Camden, N.J., to Corn Products Co., New York, N.Y. 249,957, ren. 8-6-68. Cl. 46.
Sea & Ski Corp.: *See*—
  Renauld International, Ltd.
Sears, Roebuck & Co., Chicago, Ill. 732,979, canc. Cl. 16.
Sears, Roebuck & Co., Chicago, Ill. 854,147, pub. 5-21-68. Cl. 29.
Security Tire & Rubber Co., Inc., Richmond, Va. 854,176, pub. 5-21-68. Cl. 35.
Semi-Alloys Inc., Mount Vernon, N.Y. 854,001, pub. 5-21-68. Cl. 14.
Service Recorder Co., The, Cleveland, Ohio. 854,186, pub. 5-21-68. Cl. 37.
Service Systems Corp., Buffalo, N.Y. 854,392. Cl. 100.
Service Systems Corp., Buffalo, N.Y. 854,394. Cl. 103.
Sex Information and Education Council of the United States, Inc., New York, N.Y. 854,369, pub. 5-21-68. Cl. 107.
Sheffield Laboratories, Inc., Boston, Mass. 854,238, pub. 5-21-68. Cl. 44.
Shell Oil Co., New York, N.Y. 853,894, pub. 5-21-68. Cl. 1.
Sherburne Corp., Killington, Vt. 854,201, pub. 5-21-68. Cl. 38.
Shield Mfg., Inc., from Roberts Dental Mfg. Co., Inc., Buffalo, N.Y. 854,385. Cl. 26.
Shuko Shoe Corp., Meadville, Pa. 733,119, canc. Cl. 39.
Shuron Optical Co., Inc., Geneva, by Textron Inc., Rochester, N.Y. 440,471, 12(c) pub. 8-6-68. Cl. 26.
Silver, Douglas T., d.b.a. Silver Metal Products, Hayward, Calif. 853,973, pub. 5-21-68. Cl. 12.
Silver Metal Products: *See*—
  Silver, Douglas T.
Silver Star Putty Products Co., Los Angeles, Calif. 732,922, canc. Cl. 12.
Simmons Hardware Co., St. Louis, Mo., to Val-Test Distributors, Inc., Chicago, Ill. 70,084, ren. 8-6-68. Cl. 23.
Simmons Hardware Co., St. Louis, Mo., to Val-Test Distributors, Inc., Chicago, Ill. 70,180, ren. 8-6-68. Cl. 4.
Simon Cigar Co. Ltd., Montreal, Quebec, Canada. 854,011-12, pub. 5-21-68. Cl. 17.
Singer, Artie, Enterprises, Inc., Philadelphia, Pa. 733,110, canc. Cl. 36.
Sirco Products Co., Inc., Mount Vernon, N.Y. 853,924, pub. 5-21-68. Cl. 3.
Skalet Mfg. Co., Inc., New York, N.Y. 733,085, canc. Cl. 28.
Societe des Lunetiers, Paris (Seine), France. 854,128, pub. 5-21-68. Cl. 26.
Society of the Plastics Industry, Inc., The, New York, N.Y. 854,359, pub. 5-21-68. Cl. 101.
Sohn, Ernest, Creations, Inc., New York, N.Y. 733,090, canc. Cl. 30.
Sou-Tex Chemical Co. Inc., Mount Holly, N.C. 853,951, pub. 5-21-68. Cl. 6.
Southern Cotton Oil Co., The, Jersey City, N.J., to Hunt-Wesson Foods, Inc., Fullerton, Calif. 69,714, ren. 8-6-68. Cl. 46.
Southwest Grease & Oil Co., Inc., Wichita, Kans. 854,346, pub. 5-21-68. Cl. 101.
Special Oils Mfg. Co., West New York, N.J. 854,004, pub. 5-21-68. Cl. 15.
Speed King Mfg. Co., Inc., Dodge City, Kans. 854,088, pub. 5-21-68. Cl. 23.
Sport-Obermeyer, Ltd., Aspen, Colo. 854,060, pub. 5-21-68. Cl. 22.
Spring Hill Fuel Co., d.b.a. Aluminum Detail Products, Seattle, Wash. 853,967, pub. 5-21-68. Cl. 12.
Squibb, E. R., & Sons, Inc., New York, N.Y. 854,319, pub. 5-21-68. Cl. 51.
Stamper, F. M., Co., d.b.a. Banquet Canning Co., St. Louis, Mo. 854,255, pub. 5-21-68. Cl. 46.
Standard International Corp., Andover, Mass., from Club Aluminum Products Co., La Grange Park, Ill. 853,981, pub. 5-21-68. Cl. 13.
Stanley Blacker, Inc., Philadelphia, Pa. 854,222, pub. 5-21-68. Cl. 39.
Stanley, Wm. H., Inc., New York, N.Y., to New England Fish Co., Seattle, Wash. 243,298, ren. 8-6-68. Cl. 46.
Star Engraving Co., Houston, Tex. 854,140, pub. 5-21-68. Cl. 28.
Star-Grip Glove Co., Inc., Timonium, Md. 854,073, pub. 5-21-68. Cl. 22.
Statikil, Inc., Cleveland, Ohio. 853,952, pub. 5-21-68. Cl. 6.
Sterwin Chemicals Inc., New York, N.Y. 853,950, pub. 5-21-68. Cl. 6.
Stevens, J. P., & Co., Inc., New York, N.Y. 853,928, pub. 5-21-68. Multiple Class (Classes 5 and 6).
Storey Bros. & Co. Ltd., Lancaster, England. 854,034, pub. 5-21-68. Cl. 20.
Strobel Products Co., Inc., Louisville, Ky. 853,926, pub. 5-21-68. Cl. 4.
Suffolk County Organization for the Promotion of Education, Oakdale, N.Y. 854,368, pub. 5-21-68. Cl. 107.
Sun Finance & Loan Co., The, Cleveland, Ohio. 854,362, pub. 5-21-68. Cl. 102.
Sunbeam Lighting Co., Los Angeles, Calif. 854,163, pub. 5-21-68. Cl. 34.
Sunbeam Lighting Co., Los Angeles, Calif. 854,168, pub. 5-21-68. Cl. 34.
Superba Cravats, Inc., Rochester, N.Y. 854,221, pub. 5-21-68. Cl. 39.
Sweetheart Plastics, Inc., Wilmington, Mass. 853,910, pub. 5-21-68. Cl. 2.
Synanon Foundation, Inc., Santa Monica, Calif. 854,191-2, pub. 5-21-68. Cl. 37.
Takara Co., Brooklyn, N.Y. 853,980, pub. 5-21-68. Multiple Class (Classes 13, 32, and 44).
Tanda Toys Ltd., Enfield, Middlesex, England. 854,069, pub. 5-21-68. Cl. 22.
Tandbergs Radiofabrikk A/S, Oslo, Norway. 854,043, pub. 5-21-68. Multiple Class (Classes 21, 26, and 36).
Tanny, Victor A., Beverley Hills, Calif. 720,125, canc. Cl. 100.
Tanzini, Guido J., d.b.a. G-J Custom, Whittier, Calif. 854,300, pub. 5-21-68. Cl. 50.
Tasker, Rolly, Sails, Inc., Cary, Ill. 854,032, pub. 5-21-68. Cl. 19.
Tassette, Inc., Stamford, Conn. 854,235, pub. 5-21-68. Cl. 44.
Taylor Electric Mfg. Co., Ltd., London, Canada. 854,039, pub. 5-21-68. Cl. 21.
Technical Tooling, Inc., Minneapolis, Minn. 853,958, pub. 5-21-68. Cl. 9.
Teer, Nello L., Co., Durham, N.C. 853,970, pub. 5-21-68. Cl. 12.
Tennessee Foods, Inc.: *See*—
  Tennessee Fresh Frozen Foods, Inc.
Tennessee Fresh Frozen Foods, Inc., Portland, to Tennessee Foods, Inc., Jackson, Tenn. 441,141, ren. 8-6-68. Cl. 46.
Terhune, Yerance & Wolff, Inc., New York, N.Y., by J. Schoeneman, Inc., Owings Mills, Md. 337,522, 12(c) pub. 8-6-68. Cl. 42.
Terrell Machine Co., The, Charlotte, N.C. 733,029, canc. Cl. 23.
Texize Chemicals, Inc., Greenville, S.C. 853,936, pub. 5-21-68. Cl. 6.
Texize Chemicals, Inc., Greenville, S.C. 854,326, pub. 5-21-68. Cl. 52.
Textron Inc.: *See*—
  S & S Mfg. Co.
  Shuron Optical Co., Inc.
Textron Inc., Rochester, N.Y. 854,134, pub. 5-21-68. Cl. 26.
Textron, Inc., from Gorham Corp., Providence, R.I. 854,144, pub. 5-21-68. Cl. 29.
Thermold Co., Trenton, N.J., to H. K. Porter Co., Inc., Pittsburgh, Pa. 500,722, ren. 8-6-68. Cl. 35.
Thermoplastics Corp., Charlotte, N.C. 853,930, pub. 5-21-68. Multiple Class (Classes 5 and 13).
Thermwell Products Co., Inc., New York, N.Y. 732,915, canc. Cl. 12.
Thiokol Chemical Corp., Bristol, Pa. 853,963, pub. 5-21-68. Cl. 9.
Thomas, Susan, New York, N.Y. 733,117, canc. Cl. 39.
Throw-Away Grips, Inc., Detroit, Mich. 854,104, pub. 5-21-68. Cl. 23.
Tiox-Tinten- und Klebstoffwerk Gesellschaft m.b.H., Vienna, Austria. 853,929, pub. 5-21-68. Cl. 5.
Tip Top Products Co., Omaha, Nebr. 501,099, ren. 8-6-68. Cl. 40.
Tobin Packing Co., Inc., Rochester, N.Y. 854,283, pub. 5-21-68. Cl. 46.
Tomos Tovarna Motornih Vozil, Koper, Yugoslavia. 854,027, pub. 5-21-68. Multiple Class (Classes 19 and 23).
Toulouklan, Hagop S., d.b.a. Cornhill Commercial Co., New York, N.Y. 854,109, pub. 5-21-68. Cl. 23.
Tractor Supply Co., Chicago, Ill. 854,150, pub. 5-21-68. Cl. 31.
Transa Structures, Inc., Fullerton, Calif. 732,919, canc. Cl. 12.
Traum, David, Inc., New York, N.Y. 854,114, pub. 5-21-68. Cl. 24.
Trav-Air Research & Development Co., Indianapolis, Ind. 732,967, canc. Cl. 15.
Trefileries Leon Bekaert, Zwevegem, Belgium. 853,997-8, pub. 5-21-68. Cl. 14.
Tri Sportswear, Inc.: *See*—
  Manufacturas Del Vestido S.A.
Triangle Business Machines, Inc., Los Angeles, Calif. 733,075, canc. Cl. 26.
Troqueles y Esmaltes, S.A., Monterrey, Mexico. 854,166, pub. 5-21-68. Cl. 34.
Tupperware: *See*—
  Rexall Drug and Chemical Co.
Tyrone Hydraulics, Inc., Corinth, Miss. 854,099, pub. 5-21-68. Cl. 23.
Union Broach Co., Inc., Long Island City, N.Y. 854,239, pub. 5-21-68. Cl. 44.
Union Carbide Corp., New York, N.Y. 732,963, canc. Cl. 14.
Uniroyal, Inc.: *See*—
  Naugatuck Chemical Co., The.
  U.S. Rubber Co.
United Air Specialists, Inc., Cleveland, Ohio. 854,052, pub. 5-21-68. Cl. 21.
United Drug Co., Boston, Mass., to Rexall Drug & Chemical Co., d.b.a. Rexall Drug Co., Los Angeles, Calif. 246,129, ren. 8-6-68. Cl. 18.

United Merchants & Manufacturers, Inc., New York, N.Y. 733,142, canc. Cl. 42.
United Merchants & Manufacturers, Inc., New York, N.Y. 733,144, canc. Cl. 42.
United States Aviex Co., Niles, Mich. 853,933, pub. 5–21–68. Multiple Class (Classes 6, 15, and 52).
United States Diamond Wheel Co., Aurora, Ill. 853,925, pub. 5–21–68. Cl. 4.
U.S. Rubber Co., by Uniroyal, Inc., New York, N.Y. 245,262, 12(c) pub. 8–6–68. Cl. 35.
U.S. Rubber Co., by Uniroyal, Inc., New York, N.Y. 246,613, 12(c) pub. 8–6–68. Cl. 22.
U.S. Rubber Co., by Uniroyal, Inc., New York, N.Y. 248,035, 12(c) pub. 8–6–68. Cl. 50.
U.S. Tobacco Co., New York, N.Y. 854,013, pub. 5–21–68. Cl. 17.
Universal Oil Products Co., Des Plains, Ill. 853,942–3, pub. 5–21–68. Cl. 6.
Utley Porcelains, Ltd., Trenton, N.J. 854,298–9, pub. 5–21–68. Cl. 50.
VEB Druckmanschinenwerke Leipzig, Leipzig, Germany. 854,083, pub. 9–19–67. Multiple Class (Classes 23 and 26).
Vahlsing, Inc., Robbinsville, N.J. 854,254, pub. 5–21–68. Cl. 46.
Val-Test Distributors, Inc.: *See*—
  Simmons Hardware Co.
Vanguard Industries, Inc., Cincinnati, Ohio. 733,027, canc. Cl. 23.
Vanity Fair Mills, Inc.: *See*—
  Vanity Fair Silk Mills.
Vanity Fair Silk Mills, Reading, to Vanity Fair Mills, Inc., Wyomissing, Pa. 249,588, ren. 8–6–68. Cl. 39.
Vette Shop, Inc., The, Detroit, Mich. 853,978, pub. 5–21–68. Cl. 12.
Ventura Tool Co., Ventura, Calif. 853,987, pub. 5–21–68. Cl. 13.
Vikoa, Inc., Hoboken, N.J. 854,054, pub. 5–21–68. Cl. 21.
Virax, Paris, France. 853,986, pub. 5–21–68. Cl. 13.
Visual Impact, Inc., Gardner, Kans. 854,198, pub. 5–21–68. Cl. 38.
Vitramon, Inc., Monroe, Conn. 854,084, pub. 5–21–68. Cl. 23.
Voss, Arthur H., Los Angeles, Calif. 732,923, canc. Cl. 12.
Warren Mfg. Co., The, to Riegel Paper Corp., New York, N.Y. 247,157, ren. 8–6–68. Cl. 37.
Watkins Products, Inc., d.b.a. King Laboratories, Winona, Minn. 854,390. Cl. 46.
Weir, Basial B., Alvin, Tex. 854,103, pub. 5–21–68. Cl. 23.
Welcome Wagon International, Inc., Memphis, Tenn. 724,848, canc. Cl. 38.
Weldon, Williams & Lick, Inc., Fort Smith, Ark. 503,330, ren. 8–6–68. Cl. 38.
Weldun Tool & Engineering Co., Three Oaks, Mich. 854,087, pub. 5–21–68. Cl. 23.
Welsbach Corp., The, Philadelphia, Pa. 733,033–4, canc. Cl. 23.
Wembley, Inc., New Orleans, La. 440,977, ren. 8–6–68. Cl. 39.
Werner, R. D., Co., Inc., Greenville, Pa. 853,982, pub. 5–21–68. Cl. 13.
Wernet Dental Mfg. Co., Inc., to Block Drug Co., Inc., Jersey City, N.J. 503,955, ren. 8–6–68. Cl. 29.
Westab, Inc.: *See*—
  Blair, J. C., Co.
  Western Tablet & Stationery Corp.
Western Grape Products, Kingsburg, Calif. 854,288, pub. 5–21–68. Cl. 47.
Western Sewing Machine Distributors, Inc., St. Louis, Mo. 854,110, pub. 2–27–68. Cl. 23.
Western Tablet & Stationery Corp., to Westab, Inc., Dayton, Ohio. 440,745, ren. 8–6–68. Cl. 37.
Western Tablet & Stationery Corp., to Westab, Inc., Dayton, Ohio. 440,747, ren. 8–6–68. Cl. 37.
Western Tablet & Stationery Corp., Dayton, Ohio, from White & Wyckoff Mfg. Co., Holyoke, Mass. 733,114, canc. Cl. 37.
White Night Co., Leawood, Kans. 854,047, pub. 5–21–68. Cl. 21.
White, S. S., Co.: *See*—
  Pennsalt Chemicals Corp.
White & Wyckoff Mfg. Co.: *See*—
  Western Tablet & Stationery Corp.
Whitfield Pickle Co., Montgomery, Ala. 854,279, pub. 5–21–68. Cl. 46.
Wiechers Enterprises, Inc., South Miami, Fla. 854,195, pub. 5–21–68. Cl. 38.
Wilkinson Sword Ltd., London, England. 854,098, pub. 5–21–68. Cl. 23.
Williams, Beverly E., La Grange Park, Ill. 854,049, pub. 5–21–68. Cl. 21.
Wilson Parts Mfg.: *See*—
  Wilson, Wayne J. and Leigh B. Wilson.
Wilson, Wayne J. and Leigh B. Wilson, d.b.a. Wilson Parts Mfg., Centerlaine, Mich. 854,107–8, pub. 5–21–68. Cl. 23.
Winne, Frank W., & Son, Inc., Philadelphia, Pa. 503,221–2, ren. 8–6–68. Cl. 7.
Wiremold Co., The, Hartford, Conn. 854,164, pub. 5–21–68. Cl. 34.
Wolff Freres, Inc., New York, N.Y. 854,391. Cl. 51.
Woolfolk Chemical Works, Ltd., Fort Valley, Ga. 441,429, ren. 8–6–68. Cl. 6.
Wright & McGill Co., Denver, Colo. 440,655, ren. 8–6–68. Cl. 22.
Write Inc., New York, N.Y. 436,133, ren. 8–6–68. Cl. 11.
Yardley: *See*—
  Yardley of London, Inc.
Yardley of London, Inc., d.b.a. Yardley, Totowa, N.J. 854,303, pub. 5–21–68. Cl. 51.
Yardley of London, Inc., Totowa, N.J. 854,309, pub. 5–21–68. Cl. 51.
Ziebart Process Corp., Detroit, Mich. 854,367, pub. 5–21–68. Cl. 106.

U.S. GOVERNMENT PRINTING OFFICE: O—1968

U.S. DEPARTMENT OF COMMERCE

OFFICIAL GAZETTE of the UNITED STATES PATENT OFFICE

August 13, 1968 Volume 853 Number 2

PATENTS

NOTICES

Board of Appeals Decisions Rendered in the Month of June 1968

Examiner affirmed	121
Examiner affirmed in part	14
Examiner reversed	30
Total	165

Official Mailing Address

The official mailing address for all communications sent to the Patent Office remains:

Commissioner of Patents
Washington, D.C. 20231

The physical location of the Office is 2021 Jefferson Davis Highway, Arlington, Va. This address should not be used on mail sent to the Patent Office.

C. A. KALK,
Director of Administration.

June 25, 1968.

Dedication

3,265,556.—*Albert O. Hungerford*, Kansas City, Mo., and *Dale E. Jackson*, Prairie Village, Kans., FIBER REINFORCED PLASTIC PANEL AND METHOD OF MAKING SAME. Patent dated Aug. 9, 1966. Dedication filed Apr. 24, 1968, by the assignee, *E. I. du Pont de Nemours and Company.*

Hereby dedicates to the Public the remaining term of said patent.

Disclaimers

3,193,200.—*James R. Willson*, Greensburg, Pa. THERMOSTATIC CONTROL AND TIMER CLEARING SYSTEM. Patent dated July 6, 1965. Disclaimer filed Apr. 1, 1968, by the assignee, *Robertshaw Controls Company.*

Hereby enters this disclaimer to all the claims of said patent.

3,245,211.—*Raymond M. Weygandt* and *Raymond A. Weygandt*, Canby, Oreg. APPARATUS FOR AND METHOD OF HARVESTING BERRIES AND SIMILAR PRODUCE FROM BUSHES. Patent dated Apr. 12, 1966. Disclaimer filed Mar. 7, 1968, by the inventors.

Hereby enter this disclaimer to claim 2 of said patent.

3,361,486.—*Arthur W. Simmons, Jack Washbourn,* and *David J. Wickham,* London, England. DISTRIBUTORS FOR BRAKING APPARATUS. Patent dated Jan. 2, 1968. Disclaimer filed Apr. 22, 1968, by the assignee, *Westinghouse Brake and Signal Company Limited.*

Hereby enters this disclaimer to claim 10 of said patent.

Plan for a Patent Cooperation Treaty (PCT)

The United International Bureaux for the Protection of Intellectual Property (BIRPI) released on May 31, 1967 in Geneva, Switzerland, a draft of a proposed Patent Cooperation Treaty designed to increase greatly international cooperation in the protection of inventions. This draft was reproduced in the OFFICIAL GAZETTE of the U. S. Patent Office on June 13, 1967.

A meeting of a Committee of Experts was held in Geneva from October 2–10, 1967 to consider the proposed treaty. A report of this meeting was released by BIRPI as PCT/II/2 dated October 20, 1967. A copy of this report was reproduced in the OFFICIAL GAZETTE of January 2, 1968.

A meeting of a Working Group was held in Geneva from March 25–29, 1968 to consider the subject of searching under the Patent Cooperation Treaty. A report of this meeting was released by BIRPI as PCT/II/7 dated April 3, 1968. A copy of this report was reproduced in the OFFICIAL GAZETTE of April 30, 1968. Meetings previously scheduled for July 1–5, 1968 and November 4–12, 1968 have been canceled. Instead, the Director of BIRPI has scheduled a single meeting of a Committee of Experts in Geneva from December 2–10, 1968. All member states of the Paris Union have been invited to this meeting as well as those inter-governmental and international non-governmental organizations which have participated in previous meetings.

Since considerable interest has been expressed in the developments in the treaty proposal, there has been reproduced in this issue of the OFFICIAL GAZETTE copies of the following BIRPI Notices dated July 15, 1968:

PCT/III/3: Evolution of the Plan
PCT/III/4: Summary of the Proposed Treaty
PCT/III/5: Draft Treaty
PCT/III/6: Draft Regulations.

PCT/III/1 (Agenda) and PCT/III/2 (List of Preparatory Documents) were also released by BIRPI on July 15, 1968. These documents are not reproduced since they contain no substantive matter relating to the new draft of the treaty and regulations. Copies of these two documents are, however, available on request.

EDWARD J. BRENNER,
Commissioner.

Approved: July 25, 1968.

Disclaimers and Dedications

3,198,447.—*August J. Hambach,* Richmond, Va. PRECISION WINDER. Patent dated Aug. 3, 1965. Disclaimer and dedication filed Apr. 15, 1968, by the assignee, *Maremont Corporation.*

Hereby disclaims and dedicates to the Public the entire term of said patent.

New Applications Received During May 1968

Patents	8117
Designs	453
Plant Patents	11
Reissues	33
Total	8614

Issue—August 13, 1968

Patents	1000	—No. 3,396,406 to No. 3,397,405, incl.
Designs	50	—No. 211,925 to No. 211,974, incl.
Reissues	5	—No. 26,438 to No. 26,442, incl.
Total	1055	

3,381,728.—*Milton Goldstein*, Long Beach, N.Y. ROUTING TOOL. Patent dated May 7, 1968. Disclaimer and dedication filed Apr. 24, 1968, by the assignees, *John Barsho, A. Abba Orlinger*, and *Milton Goldstein, as trustees.*

Hereby disclaim and dedicate to the Public the terminal portion of the term of the patent subsequent to Mar. 8, 1983.

3,386,238.—*Richard L. Voit*, Northbrook, Ill. CONTROL MECHANISM FOR ALARM CLOCK. Patent dated June 4, 1968. Disclaimer and dedication filed July 11, 1968, by the assignee, *General Time Corporation.*

Hereby disclaims and dedicates to the Public the terminal portion of the term of the patent subsequent to Nov. 14, 1984.

PATENT EXAMINING CORPS

R. A. WAHL, Assistant Commissioner

CONDITION OF PATENT APPLICATIONS AS OF JULY 29, 1968

PATENT EXAMINING OPERATIONS AND GROUPS	Actual Filing Date of Oldest Case Awaiting Action	
* Denotes date of oldest application for each Operation.	New	Amended
CHEMICAL EXAMINING OPERATION		
GENERAL CHEMISTRY AND PETROLEUM CHEMISTRY, GROUP 110—M. STERMAN, Director Inorganic Compounds; Inorganic Compositions; Organo-Metal and Organo-Metalloid Chemistry; Metallurgy; Metal Stock; Electro Chemistry; Batteries; Hydrocarbons; Mineral Oil Technology; Lubricating Compositions; Gaseous Compositions; Fuel and Igniting Devices.	5- 2-66	1-8 -64
GENERAL ORGANIC CHEMISTRY, GROUP 120—I. MARCUS, Director Heterocyclic; Amides; Alkaloids; Azo; Sulfur; Misc. Esters; Carbohydrates; Herbicides; Poisons; Medicines; Cosmetics; Steroids; Oxo and Oxy; Quinones; Acids; Carboxylic Acid Esters; Acid Anhydrides; Acid Halides.	5- 2-66	5-24-63
HIGH POLYMER CHEMISTRY, PLASTICS AND MOLDING; GROUP 140—L. J. BERCOVITZ, Director Synthetic Resins; Rubber; Proteins; Macromolecular Carbohydrates; Mixed Synthetic Resin Compositions; Synthetic Resins With Natural Polymers and Resins; Natural Resins; Reclaiming; Pore-Forming; Compositions (Part) e.g.: Coating; Molding; Ink; Adhesive and Abrading Compositions; Molding, Shaping, and Treating Processes.	5-16-66	1-27-64
COATING AND LAMINATING, BLEACHING, DYEING AND PHOTOGRAPHY, GROUP 160—J. R. LIBERMAN, Director Coating; Processes and Misc. Products; Laminating Methods and Apparatus; Stock Materials; Adhesive Bonding; Special Chemical Manufactures; Special Utility Compositions; Bleaching; Dyeing and Photography.	*10-12-65	5-27-63
SPECIALIZED CHEMICAL INDUSTRIES AND CHEMICAL ENGINEERING, GROUP 170—W. B. KNIGHT, Director Fertilizers; Foods; Fermentation; Analytical Chemistry; Reactors; Sugar and Starch; Paper Making; Glass Manufacture; Gas; Heating and Illuminating; Cleaning Processes; Liquid Purification; Distillation; Preserving; Liquid and Solid Separation; Gas and Liquid Contact Apparatus; Refrigeration; Concentrative Evaporators; Mineral Oils Apparatus; Misc. Physical Processes.	3-17-66	2-21-64
ELECTRICAL EXAMINING OPERATION		
INDUSTRIAL ELECTRONICS AND RELATED ELEMENTS, GROUP 210—W. S. COLE, Director Generation and Utilization; General Applications; Conversion and Distribution; Heating and Related Art Conductors; Switches; Miscellaneous.	3- 9-66	3- 4-64
SECURITY, GROUP 220—S. BOYD, Director Ordnance, Firearms and Ammunition; Radar, Underwater Signalling, Directional Radio, Torpedoes, Seismic Exploring, Radio-Active Batteries; Nuclear Reactors, Powder Metallurgy, Rocket Fuels; Radio-Active Material.	4- 4-67	2- 5-65
INFORMATION TRANSMISSION, STORAGE AND RETRIEVAL, GROUP 230—M. L. LEVY, Director Communications; Multiplexing Techniques; Facsimile; Data Processing, Computation and Conversion; Storage Devices and Related Arts.	*8- 9-65	*10-10-62
ELECTRONIC COMPONENT SYSTEMS AND DEVICES, GROUP 250—W. L. CARLSON, Director Semi-Conductor and Space Discharge Systems and Devices; Electronic Component Circuits; Wave Transmission Lines and Networks; Optics; Radiant Energy; Measuring.	9-10-65	*10-10-62
PHYSICS, GROUP 280—R. L. EVANS, Director Photography; Sound and Lighting; Indicators and Optics; Measuring and Testing; Geometrical Instruments.	6- 6-66	4- 1-65
DESIGNS, GROUP 290—S. BOYD, Director Industrial Arts; Household, Personal and Fine Arts.	10-30-67	10-21-66
MECHANICAL EXAMINING OPERATION		
HANDLING AND TRANSPORTING MEDIA, GROUP 310—A. BERLIN, Director Conveyors; Hoists; Elevators; Article Handling Implements; Store Service; Sheet and Web Feeding; Dispensing; Fluid Sprinkling; Fire Extinguishers; Coin Handling; Check Controlled Apparatus; Classifying and Assorting Solids; Boats; Ships; Aeronautics; Motor and Land Vehicles and Appurtenances; Railways and Railway Equipment; Brakes; Rigid Flexible and Special Receptacles and Packages.	3- 2-67	8-13-65
MATERIAL SHAPING, ARTICLE MANUFACTURING, TOOLS, GROUP 320—N. BERGER, Director Manufacturing Processes, Assembling, Combined Machines, Special Article Making; Metal Deforming; Sheet Metal and Wire Working; Metal Fusion—Bonding, Metal Founding; Metallurgical Apparatus; Plastics Working Apparatus; Plastic Block and Earthenware Apparatus; Machine Tools for Shaping or Dividing; Work and Tool Holders Woodworking; Tools; Cutlery; Jacks.	10- 3-66	1- 4-65
AMUSEMENT, HUSBANDRY, PERSONAL TREATMENT, INFORMATION, GROUP 330—A. RUEGG, Director Amusement and Exercising Devices; Projectors; Animal and Plant Husbandry; Butchering; Earth Working and Excavating; Fishing, etc.; Tobacco; Artificial Body Members; Dentistry; Jewelry; Surgery; Toiletry; Printing; Typewriters; Stationery; Information Dissemination.	8-16-66	5-25-64
HEAT AND POWER ENGINEERING, GROUP 340—C. F. GAREAU, Director Power Plants; Combustion Engines; Fluid Motors; Pumps; Turbines; Heat Generation and Exchange; Refrigeration; Ventilation; Drying; Vaporizing; Temperature and Humidity Regulation; Machine Elements; Power Transmission.	6-14-67	6-17-66
FIXED CONSTRUCTIONS, SUPPORTS, AND HARDWARE, GROUP 350—T. J. HICKEY, Director Joints; Fasteners; Rod, Pipe and Electrical Connectors; Miscellaneous Hardware; Locks; Building Structures; Closure Operators; Bridges; Closures; Earth Engineering; Drilling; Mining; Furniture; Receptacles; Supports; Cabinet Structures.	2- 9-67	12- 8-64
TEXTILES, CLEANING AND FLUID HANDLING, GROUP 360—F. H. BRONAUGH, Director Fluid Handling, including Valves; Conduits; Filling Receptacles; Lubrication; Joint Packing; Bathroom Fixtures; Centrifugal Separators; Cleaning; Coating; Pressing; Agitating; Foods; Textiles; Apparel and Shoes and their Manufacture; Sewing Machines; Winding and Reeling.	*5-31-66	*5-29-63

Total number of pending applications (excluding Designs) 189,821
Total number of Design applications pending 3,192

Expiration of patents: The patents within the range of numbers indicated below expire during August 1968, except those which may have expired earlier due to shortened terms under the provisions of Public Law 690, 79th Congress, approved August 8, 1946 (60 Stat. 940) and Public Law 619, 83rd Congress, approved August 23, 1954 (68 Stat. 764), or which may have had their term curtailed by disclaimer under the provisions of 35 U.S.C. 253.

Patents .... Numbers 2,562,875 to 2,566,294, inclusive
Plant Patents .... Numbers 1,024 to 1,034, inclusive

ADDRESS OF COMMISSIONER EDWARD J. BRENNER

Prepared for Delivery Before the Patent, Trademark and Copyright Section of the American Bar Association, Civic Center, Philadelphia, Pennsylvania, Tuesday, August 6, 1968.

It is always a pleasure to meet with the Patent, Trademark and Copyright Section of the American Bar Association at your Annual Meeting to report to you our activities during the past fiscal year, and to inform you about our plans for the present fiscal year. Initially, I would like to outline for you the highlights of our activities during fiscal year 1968. Incidentally, I would like to mention that the figures I will quote this morning are approximate figures, rounded out to the nearest significant figure.

Patent Examining Operations

During fiscal year 1968, more than 90,000 patent applications were filed, as compared with 89,000 patent applications in the previous year. Disposals during fiscal 1968 amounted to nearly 102,000 cases, as compared with 97,000 cases in fiscal 1967. Thus, for the first four years of our Streamlined Examining Program, we have averaged 98,000 disposals per year. The so-called backlog of pending patent applications at the end of fiscal 1968 stood at 189,500, the lowest point since 1954, as compared with 200,700 at the end of the previous fiscal year. Thus, we reduced our backlog by more than 11,000 cases during the past fiscal year.

Incidentally, we are revising somewhat our accounting system with respect to our inventory of pending applications. More particularly, it is our plan in the future to use the term "backlog" to mean strictly the number of patent applications, above a normal working inventory, which are awaiting first action by our patent examiners. Thus, the total inventory of pending patent applications (excluding those in post examination) at the end of fiscal 1968 was as follows:

Application Status	Number of Applications	
	Patents (including Plants and Reissues)	Designs
Normal working inventory of new cases	[1] 60,000	[2] 1,200
Backlog of new cases	63,500	600
Under examination	66,000	2,000
Total	189,500	3,800

[1] Eight months inventory of new cases.
[2] Three months inventory of new cases.

It will be noted in the case of our patent applications, other than designs, that a normal working inventory of new cases is considered to represent an average of about eight months receipts. Generally speaking, then, our goal is to reach a situation where first actions are issued between 6 to 9 months after filing, the average being about 8 months, and to issue patents in an average of about 18 months. This timing fits in effectively with that required for various purposes such as security clearance, a reasonable inventory of new cases for each examiner, time to place foreign prior art in our search files, planned timing under the proposed Patent Cooperation Treaty, etc. Incidentally, it is our goal to completely eliminate the above-mentioned backlog within the next three years, and to then divert the additional time available to substantially increase our career development program and to increase our searching capability, particularly of foreign patent art and non-patent literature which will become increasingly more voluminous in the future and more important not only for U.S. purposes but also for operations under the proposed Patent Cooperation Treaty. It is now our plan within the next several years to change our operations to the extent required to provide a PCT type search for all of our U.S. applications, as well as all international applications filed with the U.S. Patent Office under the Patent Cooperation Treaty. In the case of designs, it is felt that a three month inventory of new cases is about the practical optimum working inventory, with first actions issued in the range of about 1 to 4 months of filing.

During the past fiscal year, more than 108,000 first actions were issued, as compared with 95,000 the previous year. The mean time to first action was reduced during the year from 20 months to 17.5 months. Thus, during the course of the past year we have made considerable progress, particularly in several areas, in reducing the time to first action, and the period of pendency of patent applications from filing to issue. For example, our Design Examining Operations are now issuing first actions on an average of about four months after filing. Also several of our examining groups, namely Groups 220, 310 and 350 are now issuing first actions on an average of approximately ten months after filing.

We issued 62,000 patents during the past year, as compared with the all-time record of 70,000 patents issued during fiscal 1967. In part, the lower number of patent issuances was due to a shortage of funds available for printing patents.

During the past year we instituted a number of changes in our patent examining procedures. One of these involved a change in our rules relating to the method for making amendments to claims, to require that, generally speaking, amendments to claims be made by the use of underlining and brackets, except in the case of minor additions of five words or less. This change as anticipated has reduced considerably the effort required in the Office in connection with the entry of amendments, and has thus helped to reduce the workload of our clerical groups. Another major new program in fiscal 1968 was the new defensive publication program which became effective May 1, 1968. Under this program an applicant interested in patenting for defensive purposes can save the time and expense of patent prosecution and issuance. Likewise the Office is spared the time and expense required to search and examine such applications. In addition, during the year, we commenced the use of abstracts in the OFFICIAL GAZETTE in lieu of claims, and initiated a new publication entitled "Patent Abstracts Section of the Official Gazette." Also, during the year we published guidelines for disclosures of utility in drug or pharmaceutical cases.

Our quality audit program, which was initiated about a year ago, has continued in full operation. The amount of data obtained to date now permits evaluation of quality at the art unit level. We also added this past year to our quality audit program an audit of patent abstracts. We are hopeful that through the cooperation of the patent bar and the careful review and editing of abstracts by our patent examiners, we can improve the quality of our patent abstracts. It is our goal to publish abstracts of sufficient quality to meet the needs of all those interested in patents, including the patent bar, businessmen, scientists, and engineers.

During the year we also initiated a new program which increased the opportunity for our patent examiners to obtain partial or full signatory authority at a rate commensurate with their ability to handle increased responsibility and authority. One of the key purposes of the program is to attract, retain, and motivate the good examiners that we need now and in the future by making it possible for good examiners to obtain full signatory authority within about six years of entering the Office.

Also, during the year we merged the positions of Operation Director and Group Manager to establish a new position of Group Director at Grade 16, and appointed sixteen Group Directors to direct the operations of our sixteen patent examining groups.

I am pleased to report that the total separations of patent professionals during the past year was the lowest it has been in nearly a decade. More particularly, we lost only 138 patent professionals during the year, as compared with an average of 180 losses per year over the past decade, and as compared with 178 losses last year.

Board of Appeals

During the past fiscal year 7,400 appeals were filed, as compared with 10,400 appeals filed in the previous year. The number of appeals filed was down significantly due to the change of procedure initiated during the year in which applicants were allowed one month after the response date set in the final rejection to file a notice of appeal. This change in procedure was initiated to reduce the number of appeals filed by permitting more time after final rejection for discussion between the examiners and applicants, and to save applicants the time and expense of filing notices of appeal in cases in which differences could be settled. Appeals disposed of in fiscal 1968 amounted to 8,500, as compared to 11,600 the previous year. The inventory of pending appeals stood at 3,200 at the end of fiscal 1968, as compared with 4,300 at the end of the previous year. The number of pending appeals is the lowest it has been for more than a decade. Generally speaking, at the present time, an appeal is disposed of in most cases within about six months.

Board of Patent Interferences

The number of interferences declared for fiscal 1968 amounted to 482, as compared with 477 the previous year. There were 615 interferences terminated during the year, as compared with 652 during the previous year. The number of pending interferences at the end of the year stood at about 900 (including an inventory adjustment) as compared with 1,100 at the end of the previous year. Thus for the first time in more than a decade, the number of pending interferences stands below 1,000. Also, during the year, a number of members of the Board of Appeals were designated as acting members of the Board of Patent Interferences. This was done in order to assist the Board of Patent Interferences to reduce their backlog of pending interferences and, also, to gain experience in connection with the planned merger of the Board of Appeals and Board of Patent Interferences in accordance with the proposed changes in U.S. patent laws.

Patent Documentation Operations

Our Documentation Groups reclassified 81,000 original patents in fiscal 1968, as compared with 43,000 the previous year. Included in our fiscal 1968 activities were four major projects covering the fields of (1) coating implements with material supply, (2) combustion, (3) electricity, electrothermally or thermally actuated switches and (4) drugs, bio-affecting and body treating compositions.

During the year we reorganized somewhat our Patent Documentation operations to establish three documentation groups, namely, the Chemical Documentation Group, the Electrical Documentation Group, and the Mechanical Documentation Group. These groups are responsible in their respective fields of technology for classification activties and regular ICIREPAT mechanized search projects, as well as decentralized library activties in the Patent Examining Corps.

During the year the Ad Hoc Committee on Patent Documentation, appointed by the Secretary of Commerce upon the recommendation of the President's Commission on the Patent System, completed its studies and issued a final report. The Committee recommended that increased efforts be made to provide better funding, long range planning, continuity of management, and the development of sophisticated management tools in the Patent Office. Further, the Committee recommended improvement in the format of the patent document and close review and control of the quality of the patent search and documentation operations. The Committee also recommended closer collaboration in the field of patent documentation between the Patent Office and outside groups, including other government agencies and private enterprise, both in the United States and internationally.

Patent Legislation

During fiscal 1968, additional hearings on patent reform were held before the House and Senate Subcommittees on Patents. The Patent Office, speaking for the Administration, indicated a number of changes it now proposed relative to the position presented to the Congress the previous year. Several of the changes of position related directly to the continued success of our patent examining operations. More particularly, it was indicated to the Congress that, in view of our past accomplishments and future plans for backlog reduction, it is considered no longer necessary to propose adopting a deferred examination system, or to require mandatory publication of pending patent applications, since it is expected that within the next few years patents generally will be issued on an average of about 18 months from filing as mentioned previously.

International Patent Activities

During the past year the first draft of the proposed Patent Cooperation Treaty, which was prepared by BIRPI, the international secretariat of the Paris Union, was reviewed and discussed widely in the United States and other countries. This first draft of the proposed treaty was considered at a meeting in Geneva, Switzerland, in October 1967, by representatives of 23 countries, as well as various international intergovernmental and non-governmental organizations. A series of additional meetings was held in Geneva during the past year preparatory to the planned publication of a second draft of the proposed Patent Cooperation Treaty. Representatives of the United States Patent Office attended these various meetings called by BIRPI on the proposed Patent Cooperation Treaty.

During the past year we also initiated a foreign professional examiner exchange program with the patent offices of six other countries and the International Patent Institute at The Hague. More specifically, examiners from the United States Patent Office visited for two months in the patent offices of Canada, England, Sweden, West Germany, Japan and the Netherlands, as well as the International Patent Institute at The Hague. Similarly, representatives of the patent offices of Canada, England, Japan and the Netherlands visited the United States Patent Office.

During the past year we also terminated, for the time being, the Patent Liaison post which we had established the previous year in Geneva, Switzerland. It was necessary to take this step in view of the overall Government-wide program directed toward reducing expenditures in foreign countries.

We also proposed that ICIREPAT be formalized and established as a Committee of Experts under the direction of BIRPI and offered to supply the Executive Secretariat for a period of up to two years. This proposal was subsequently unanimously approved by the Executive Committee of the Paris Union.

We continued our program of bilateral studies with other countries during the year. More specifically, we initiated search exchange programs with Japan, Austria, Czechoslovakia, and France. We also initiated a program with the Philippines in which patent applicants could elect to have the examination in the second country of filing deferred until examination was concluded in the initial country of filing. We also initiated a joint study program with the Swedish Patent Office, conducted a joint analysis of the search results exchange program which we carried out with the Swiss Patent Office, and agreed to conduct a program of exchanging search results on a continuing basis with the West German Patent Office.

Trademark Operations

During the past year 28,500 trademark applications were filed, as compared with 27,600 the previous year. Disposals of trademark applications amounted to 27,300 as compared with 28,300 the previous year. The inventory of pending trademark applications stood at 38,700 at the end of fiscal 1968, as compared with 37,500 the previous year.

As in the case of our Patent Examining Operations, we are changing somewhat the accounting approach of expressing our inventory of pending applications. Thus, it is our plan in the future to use the term "backlog" to mean strictly the number of trademark applications, above a normal working inventory, which are awaiting first action by our trademark examiners. The total inventory of pending trademark applications (excluding those in post examination) at the end of fiscal 1968 was as follows:

Application Status:	Number of applications
Normal working inventory of new cases	[1] 7,000
Backlog of new cases	10,000
Under examination	14,000
Total	31,000

[1] Three months inventory of new cases.

It will be noted that a normal working inventory of new cases is considered to represent an average of three months receipts. Generally speaking then, our goal is to reach a situation where first actions are issued in one to four months after filing, the average being about three months.

There were 31,000 first actions issued by our trademark examiners during the past year, as compared with 28,000 in the previous fiscal year. The time from filing to first action by the examiner averaged approximately seven months in fiscal year 1968, as compared with eight months the previous fiscal year. There were 20,400 registrations of trademarks for fiscal 1968, as compared with 22,000 the previous year.

As has been the case in recent years, the Trademark Trial and Appeal Board continued its excellent performance in maintaining its work on a current basis.

During the year we also started placing the international trademark classification on new trademark registrations. We also continued our studies of international trademark affairs and the possibilty of greater United States participation in international trademark activities.

General

During the past year we continued the relocation of our operations from the Commerce Department building in Washington, and other Washington locations, to our new quarters in Crystal Plaza, Arlington, Virginia. The moving of our Patent Examining Operations and the Patent Office Search Center was completed during the year. Further, a series of moves was initiated late in fiscal 1968, which now have resulted in the movement of all our operations, except primarily our Patent Copy Sales Branch and our reproduction operations, to our Crystal Plaza location.

During the year costs of the Patent Office amounted to $39,000,000, as compared to $35,500,000 the previous year. Income amounted to $24,000,000 the past fiscal year, as compared with $23,700,000 during the previous year. During the past fiscal year income amounted to 62% of our costs.

During the past year we also installed a computer which was purchased by the General Services Administration, and which the Patent Office now leases from GSA. Also a Speakers' Bureau was established to present talks on the United States Patent System and Patent Office, particularly at universities and colleges. Also we held a briefing conference for students and faculty of universities and colleges throughout the United States, at which we had representatives from approximately 55 colleges and universities. Due to the success of our initial efforts, we plan to continue this on a regular basis in the future.

In summary, I believe it is apparent that fiscal year 1968 was, generally speaking, a very good year and

that considerable progress was made in all of our operations. In addition to our operations referred to specifically above, full credit must be given to the Office of Administration, Office of Research, Development and Analysis, Office of Patent Services, Office of the Solicitor, and Office of Planning and Programming for their significant contributions to the overall success of the Office's efforts in fiscal year 1968.

Now, I would like to turn to a review of the outlook for fiscal 1969.

Patent Examining Operations

We estimate that there will be 92,000 patent applications filed during fiscal 1969. We also estimate that we will dispose of 109,000 patent applications during the year, so that the inventory of pending applications will be reduced by 17,000 cases during the year. Thus, at the end of fiscal 1969, the inventory of pending patent applications (other than designs and those in post examination) will have been reduced to about 173,000—the lowest level since 1947. We also estimate that we will issue 111,000 first actions during fiscal 1969. Thus the "backlog" of cases awaiting first action by the examiner will be reduced by 19,000 cases during the year. The estimate of somewhat higher productivity in fiscal 1969, as compared with fiscal 1968, is based upon a somewhat larger and definitely more experienced corps of examiners anticipated for fiscal year 1969, as compared with fiscal 1968. Also, we hope to get a significant assist in productivity as a result of our newly initiated defensive publication program as well as several other procedural changes planned for the year. As mentioned previously, we expect to be able to eliminate our backlog within the next three years. It is interesting to note, however, that if we made an all-out effort by exceeding our goals by 10%, we could eliminate our backlog within two years.

Normally we would anticipate issuing about 72,000 patents during the year but, due to budget restrictions, a lesser amount may be issued. This will mean, of course, that there could be a buildup of patents to be printed in a subsequent year. However, we do plan to make special the issuance of any particular patent upon the specific request of the patent applicant or a patent examiner, and such cases would be given priority of issuance.

As recently announced, we are planning to conduct a six-month trial program authorizing an applicant to submit, under certain conditions, claims involving multiple dependency. If this experiment proves successful, we plan to continue it on a regular basis in the future.

We have recently adopted or plan to adopt in the near future a number of changes relating to examining formalities. For example, we are further liberalizing our position to permit greater use of negative limitations and alternative expressions in claims. We are also studying the possibility of liberalizing our requirements for Rule 312 amendments. Also, we are tightening our requirements for division or restriction. Combination claims (other than genus claims linking species claims), whether allowable, allowed, or not, will no longer automatically be permitted to serve as a basis for joining claimed inventions which otherwise would be properly the subject of a restriction requirement. In other words, applicant will be required to elect one of the claimed inventions which are the subject of a proper restriction requirement. Combination claims, formerly considered linking claims, will be grouped as a separate invention. Rejoinder of the divided inventions, should any combination claim be allowed, however, also will no longer automatically be permitted. The statutory criteria for distinctness will be satisfied if the sub-combinations and/or combinations involved are shown to be separately classified, or to have acquired a separate status in the art, or to involve different fields of search. In addition, in the case of genus claims linking species claims (including Markush claims), we plan in the future to authorize examiners to require the applicant to elect his preferred species prior to commencing a search of the case. We hope that we will be able to obtain the full cooperation of the patent bar in this program by agreeing to make elections in most cases in examiner-initiated telephone interviews.

We also plan to publish in the near future a number of proposed rule changes relating to physical requirements for patent specifications and drawings. These changes are intended to accomplish a number of important purposes, namely, (1) to permit the utilization by applicants and the Office of advanced technology relating to drawings, (2) to permit the possibility of the Office printing patents in the future by offset printing to reduce printing costs, and (3) to harmonize on an international basis the formalities relating to the physical requirements of patent specifications and drawings. Also, we plan to publish in the near future a proposed rule change relating to certificates of correction, which is designed to streamline our procedures for issuing such certificates in the future. We also plan to issue in the near future official formal guidelines for the examination of patent applications relating to computer programs.

During fiscal 1969 we plan to continue vigorous efforts to bring into better balance the workload and staffing between our various groups, art units, and dockets. Basically, we hope to accomplish this shift primarily through normal recruiting and turnover activities. Due to the current budget situation and our present staffing situation, our recruitment for new examiners will be more limited than in prior years. Generally speaking, the bulk of our recruiting effort will be for chemical engineers, electrical engineers and physicists.

During fiscal 1969 we also plan to extend our quality audit program to include a re-search of a 100 case sample of recently issued patents. This will fill a significant void in our present knowledge of patent quality. More particularly, it is planned to carry out the research in-house (as recommended recently by the Patent Advisory Committee) and to have the new search carried out by senior classifiers. It is further planned that any questions raised as to the patentability of claims as a result of the re-search will be reviewed by a three member panel from the Board of Appeals. It should be pointed out that this trial program will be limited to an evaluation of a Corps-wide sample and will not be directed to the Group, Art unit or individual examiner level.

We are also presently considering the possibility of permitting examiners at their option to present an oral argument before the Board of Appeals in those cases where the applicant has appealed from a final rejection given by such examiner. Such a program now becomes more feasible in view of the fact that the Board of Appeals is now essentially current in their work and also because both the Examining Corps and the Board of Appeals are now located at Crystal Plaza. We are presently considering initiating this proposed new program on a trial basis in the near future.

Fiscal year 1969 will be a most important year for our Patent Examining operations and a year in which we will be seeking to achieve a significant reduction in our backlog, to get more current in our various operations, to maintain high quality and improve service to the public wherever possible, and to accomplish this basically by operating in the most efficient manner possible, utilizing to the fullest extent all of the improved procedures and techniques we have developed to provide the higher productivity and quality of work.

Patent Appeals and Interferences

During fiscal 1969 we plan to continue reducing the number of pending appeals and interferences to reach a completely current status in each area by the end of the year. More particularly, we hope to reduce the number of pending appeals to 2500 and the number of pending interferences to 700. In the case of appeals, we believe our goal can be attained if we achieve our goal of having Examiner Answers submitted on an average within one month of the time appeal briefs are filed by the applicant.

We also are presently reconsidering the question of changing interference practice to provide for the submission of affidavits in lieu of taking testimony as is now presently provided in the case of interferences.

Patent Documentation

We expect the Patent Copy Fulfillment System to be completed and in full operation this fall. This is the microform system which will enable us to produce paper copies of patents on demand from microform. This system will reduce the cost of supplying patent copies and significantly improve our service to the public by more promptly supplying patent copies of high quality on request.

With respect to our long-range plans involving conversion of the search files in the Patent Examining Corps and/or the Public Search Room to microform aperture cards, we now expect delivery of four pilot microform viewers within about a year from now, rather than late this calendar year as previously contemplated due to a delay resulting from certain technical problems. We now estimate that any operational systems in the Patent Examining Corps or Public Search Room could not be installed until fiscal 1971 or later.

We also expect to commence shortly the placing of International Patent Classification symbols on newly issuing U.S. patents. We have recently completed the development of a concordance between the U.S. patent classification and the IPC, which we will utilize in connection with this program, as well as a second (IPC to U.S. classification) concordance for expediting the routing of incoming foreign patents received by the United States Patent Office, to our examiner search files. Copies of the IPC in detail will be available within the next several months, and once these are received we expect to begin placing IPC symbols on U.S. patents.

We have initiated a series of studies directed to the development of an overall, comprehensive long range patent documentation plan for the Office. These studies will be directed to the future requirements for patent format, examiner search systems, satellite search centers, international patent cooperation, and data collection, based on the anticipated situation in 1975 and 1985.

We have also initiated a pilot program designed to evaluate the operation of patent documentation units attached to three of our examining groups, namely, one each in the chemical, electrical, and mechanical fields. The experiment is directed to obtaining first hand information as to possible operational and organizational changes that would provide a closer and more efficient working relationship between our patent documentation people and our patent examiners.

Patent Legislation

In view of the planned early adjournment of Congress this year, it now appears unlikely that any Patent Reform Bill will be passed this year or by this Congress. It is hoped, however, that action on patent reform can be resumed again early next year in order to obtain the passage at an early date of a good sound patent bill which will be needed for the future.

It is encouraging, nevertheless, to note that as a result of the considerable discussion and debate over the course of the past two years, it has now been possible to move close to a consensus on the provisions which would be desirable to have in a new patent bill. The bill recently introduced by Senator McClellan appears to come very close to such a consensus.

International Patent Activities

BIRPI has recently published a second draft of the proposed Patent Cooperation Treaty. This draft includes not only a draft of the treaty itself, but also a draft of the proposed regulations and an explanatory memorandum of contemplated operations. This draft will be considered in Geneva this December at a meeting of all member countries of the Paris Union, plus representatives of various international intergovernmental and nongovernmental organizations. If all goes well at the December meeting, BIRPI is planning to hold a Diplomatic Conference to negotiate the treaty in late 1969 or early 1970.

We also plan to continue and possibly expand our bilateral studies and search exchange programs with patent offices of various other countries.

Trademark Operations

We estimate that there will be 28,000 trademark applications filed during fiscal 1969. We also estimate that our Trademark Examining Corps will dispose of 32,000 applications during the year, and issue first actions in approximately 33,000 applications. Thus, we estimate that the inventory of pending trademark applications will be reduced by 4,000 cases during the year and the backlog of cases awaiting first action will be reduced by 5,000 cases during the year. We now expect to reach our goal of issuing first actions within three months of filing by the end of fiscal 1970.

During the past year we operated on a trial basis with four trademark examining divisions, as compared with the two division organization we have had for several years in the past. The new four division organization has proven to work quite satisfactorily and we are now establishing this on a regular operating basis.

We plan this year to continue our studies of the international trademark situation, as well as possibilities for further international cooperation in the trademark field.

General

In fiscal 1969 we plan to continue placing emphasis on our overall program of providing better service to the public in all of our operations. More specifically, we hope to be able to get all of our operations on a more current basis of operation, as well as to improve the quality of our work. This will represent a real challenge to all of us, particularly in view of the contemplated tight budget situation under which we must operate during this fiscal year. There is no doubt that fiscal 1969 will be a most critical year for both our patent and trademark operations, but I am confident that we will demonstrate that we can continue our upward progress and thereby make fiscal 1969 the most successful year ever in the history of the United States Patent Office.

In closing, I wish to add that such progress would not be possible without the support of the members of the patent bar.

On April 6, 1964, in my first address to the Patent Office professional staff, I noted the then critical situation facing the Patent Office and Patent System. Our backlog was approaching the 220,000 mark with a constantly increasing number of applications, and other disquieting problems. A plan was outlined and a course of action was charted for our Examining Corps. The results are evident today. We are now no longer looking for a new Patent System but a better and improved system. The patent bar has been patient, diligent, and cooperative. Because of your effort and that of the personnel of the Patent Office, we are experiencing a level of operations for which we can all be justly proud.

My deep appreciation to each of you and to the bar collectively.

PATENT COOPERATION TREATY

BUREAUX INTERNATIONAUX RÉUNIS POUR LA PROTECTION DE LA PROPRIÉTÉ INTELLECTUELLE GENÈVE, SUISSE

BIRPI

UNITED INTERNATIONAL BUREAUX FOR THE PROTECTION OF INTELLECTUAL PROPERTY GENEVA, SWITZERLAND

COMMITTEE OF EXPERTS ON THE BIRPI PLAN FOR FACILITATING THE FILING AND EXAMINATION OF APPLICATIONS FOR THE PROTECTION OF THE SAME INVENTION IN A NUMBER OF COUNTRIES

Plan for a Patent Cooperation Treaty (PCT)

(Geneva, December 2 to 10, 1968)

PCT/III/3—Original: English— July 15, 1968

EVOLUTION OF THE PLAN

CONTENTS

HISTORY OF THE PLAN

Origin and First Consultations

1. On a proposal presented by the Delegation of the United States of America, the Executive Committee of the International (Paris) Union for the Protection of Industrial Property adopted, on September 29, 1966, the following recommendation (see BIRPI document CEP/II/12, paragraph 46):

> "The Executive Committee of the International (Paris) Union for the Protection of Industrial Property (Second Session, Geneva, September 29, 1966),
>
> "*Having noted:*
>
> "that all countries issuing patents, and particularly the countries having a preliminary novelty examination system, have to deal with very substantial and constantly growing volumes of applications of increasing complexity,
>
> "that in any one country a considerable number of applications duplicate or substantially duplicate applications concerning the same inventions in other countries thereby increasing further the same volume of applications to be processed, and
>
> "that a resolution of the difficulties attendant upon duplications in filings and examination would result in more economical, quicker, and more effective protection for inventions throughout the world thus benefiting inventors, the general public and Governments,
>
> "*Recommends:*
>
> "that the Director of BIRPI undertake urgently a study on solutions tending to reduce the duplication of effort both for applicants and national patent offices in consultation with outside experts to be invited by him and giving due regard to the efforts of other international organizations and groups of States to solve similar problems, with a view to making specific recommendations for further action, including the conclusion of special agreements within the framework of the Paris Union."

2. In accordance with the above recommendation, the Director of BIRPI consulted with experts from the six States which have the highest number of applications and from the International Patent Institute. The six States were the following: France, Germany (Federal Republic), Japan, Soviet Union, United Kingdom, United States of America. The consultations took place during the months of January to April, 1967.

First Draft Treaty (1967)

3. On the basis of these consultations, a draft Treaty was prepared by BIRPI under the tentative title "Patent Cooperation Treaty." This draft (PCT/I/3), together with related documents (PCT/I/1, 2, 4, 5), all dated May 31, 1967, served as a basis for the discussions of a Committee of Experts, organized and convened by BIRPI at Geneva in October 1967.

4. In the present document, this draft and this Committee will be designated as "the 1967 Draft," and "the 1967 Committee of Experts" or "the Committee of Experts of 1967," respectively.

Committee of Experts of 1967

5. The Committee of Experts of 1967 "on the PCT Plan" sat from October 2 to 10, 1967. Those 23 countries in which, according to the latest available yearly statistics, more than 5000 applications are filed were invited to

participate as members of the Committee. They all accepted and attended. They were the following: Argentina, Australia, Austria, Belgium, Brazil, Canada, Czechoslovakia, Denmark, France, Germany (Federal Republic), Italy, Japan, Mexico, Netherlands, Norway, Poland, South Africa, Soviet Union, Spain, Sweden, Switzerland, United Kingdom, United States of America. Two countries, Hungary and India, were represented by observers.

6. The following seven intergovernmental organizations were represented: United Nations, International Patent Institute, Organization of American States, Council of Europe, European Communities, European Free Trade Association, African and Malagasy Industrial Property Office.

7. Ten non-governmental organizations, representing inventors, industrialists, patent lawyers, and patent agents, were invited and were represented. They were the following: Committee of National Institutes of Patent Agents, Council of European Industrial Federations, European Industrial Research Management Association, Inter-American Association of Industrial Property, International Association for the Protection of Industrial Property, International Chamber of Commerce, International Federation of Patent Agents, National Association of Manufacturers (USA), Union of European Patent Agents, Union of Industries of the European Economic Community.

8. Representatives of Governments, intergovernmental organizations, and non-governmental organizations, had equal opportunities to participate in the discussions.

9. The report of the Committee of Experts is published in document PCT/I/11. The following passage is quoted from paragraph 13 of that report:

> "(a) With the exception of the experts from Mexico, all the experts expressed the view that the PCT draft was highly worthwhile examining further and, after appropriate changes, completing within the shortest possible time.
>
> (b) However, some participants expressed the view that consideration of the provisions relating to international certificates (Chapter II) should wait until international filing and search were tested. Others were in doubt as to the usefulness of putting Chapter I into effect without at the same time putting Chapter II into effect.
>
> (c) Several experts emphasized that a satisfactory solution of the language question was of paramount importance to them."

Conference of Representatives of the Paris Union (1967)

10. The program of BIRPI concerning the Patent Cooperation Treaty, including the plan to hold a diplomatic conference in 1969 for the establishment of the Treaty, was considered by the Conference of Representatives of the Paris Union in its session of December 1967.

11. The Conference of Representatives is the principal organ of the Paris Union. All States members of the Union are members of the Conference.

12. The Conference expressed the view that preparatory work for the Treaty should be vigorously pursued and approved the program and budget proposals presented in relation to this preparatory work, including plans for a diplomatic conference.

Meetings During the First Half of 1968

13. In the first six months of 1968, numerous consultations took place with a view to preparing the new—second—draft of the Patent Cooperation Treaty.

14. First, the question of *international search* was considered in meetings, held on January 18 and 20, 1968, with the ten non-governmental organizations enumerated in paragraph 7, above; on January 23 to 25, with the six countries referred to in paragraph 2, above, and the International Patent Institute; and in a Working Group from March 25 to 29, 1968, to which the same 25 countries and the same intergovernmental and non-governmental organizations were invited as had been invited to the 1967 Committee of Experts (see paragraphs 5, 6, 7, above). The Japan Patent Association was also invited but was not represented. The documents of this Working Group comprise the PCT/II series (1 to 7).

15. Then, the questions of *international application and international preliminary examination* were considered in meetings, held on April 22 and 23, and April 25 and 26, 1968, with the ten non-governmental organizations referred to above; and on April 29 to May 3, 1968, with the six countries referred to above and the International Patent Institute.

16. On the basis of the advice of the 1967 Committee of Experts and the advice received in the above-mentioned seven meetings, BIRPI prepared the new, *second draft of the PCT* and the first full draft of the PCT Regulations. After having submitted these drafts to a meeting, held from June 25 to 27, 1968, of the six countries referred to above and the International Patent Institute, and after making a few amendments to the drafts on the basis of this meeting and holding a brief discussion in an information meeting on July 1, 1968, to which the rest of the 25 countries referred to in paragraph 14 and the International Patent Institute were invited, the drafts are now published as working documents PCT/III/5 and 6, intended for the Committee of Experts which is to meet from December 2 to 10, 1968.

17. In the present document, the new draft will be referred to as "the 1968 Draft."

MAIN DIFFERENCES BETWEEN THE 1967 DRAFT AND THE 1968 DRAFT

Introduction

18. For those familiar with the 1967 Draft, it might be interesting to note the following *main* differences between the 1967 Draft and the 1968 Draft:

As to "Phase I"

19. *Who May File?*—It is no longer proposed that any national of a Paris Union country should be entitled to file international applications. According to the 1968 Draft, only residents and nationals of a State party to the PCT can file international applications.

20. *Where to File?*—It is no longer proposed that the international application be filed with the International Bureau. According to the 1968 Draft, the international application will be filed with the national Patent Office of the State of which the applicant is a resident.

21. *Loss of Filing Date.*—Under the 1968 Draft, the filing date could be lost through the fault of the Receiving Office (that is, the national Office with which the international application was filed), only if the applicant chooses not to forward the authentic copy of the international application himself.

22. *Checking.*—It is no longer proposed that the checking of the minimum requirements of the international application be entrusted to the International Bureau. Under the 1968 Draft, this task is entrusted to the Receiving Office.

23. *Languages.*—It is no longer proposed that the Treaty specify the languages in which international applications can be written. The notion of official or working languages is abandoned. Under the 1968 Draft, any language can be used which the competent Searching Authority is able to handle.

24. *Who Will Establish the Search Report?*—It is no longer proposed that the international search report be established by the International Bureau after preparation by the Searching Authority. Under the 1968 Draft, the search report is established direct by the Searching Authority.

25. *Immediate Effect of Filing.*—It is no longer proposed that the international application have the effect, albeit retroactive, of a national application in each designated State only after it has been communicated with the search report. Under the 1968 Draft, the said effect starts immediately upon the filing of the international application. Such effect may only be lost later, for specific reasons.

26. *"Belgian Proposal."*—The 1967 Draft did not provide for the possibility of asking for an international-type search on a national application. Under the present proposals, this possibility is provided for.

27. *National Route.*—Under the 1968 Draft, if an international application ceases to be processed internationally because of some defect in it or omission by the applicant, it will, on request, be submitted to the national Offices of the designated States, which are obliged to form an independent judgment on the question whether the application has failed to comply with the requirements of the PCT. No such guarantee of review in each designated State was provided for in the 1967 Draft.

28. *National Fees.*—The 1967 Draft provided that national filing fees would have been replaced by "designation fees" which would have been of the same amount for each designated State and which would have been collected centrally. The 1968 Draft does not provide for such designation fees. The national filing fees are not replaced. They will remain as they are when filing is done direct (nationally) and they will not be collected centrally.

29. *Publication. When?*—It is no longer proposed that the international application be automatically published between the 18th month and the 24th month from the priority date. Under the 1968 Draft, the international application will be published promptly after the expiration of the 18th month only if, among the designated States, there is at least one which provides for publication after 18 months. Otherwise, the international application will be published only at the time when, according to the law of the designated State whose law provides for the earliest publication, publication becomes due, or, if none of the designated States provides for the publication of applications, only when the first national patent has issued. It follows from the above that, under the 1968 Draft, the applicant will never see his application published earlier than is inevitable under the laws of the States which he has designated.

30. *No Publication when Application is Withdrawn.*—Unlike the 1967 Draft, the 1968 Draft expressly provides that an international application which is withdrawn before the technical preparations for the publication are completed will not be be published.

31. *"Conditional Protection" Upon Publication.*—Unlike the 1967 Draft, the 1968 Draft is not silent on the question of the "conditional" or "provisional" protection flowing from the publication of the international application. It expressly provides for such conditional protection.

32. *Faster Procedure.*—Since, under the 1968 Draft, the checking of the international application is effected by the Receiving Office (rather than the International Bureau), since also the Receiving Office will communicate a copy of the application to the Searching Authority direct (rather than through the International Bureau), and there will be only one (rather than one plus a supplementary) search, procedure will be simpler and faster than it would have been under the 1967 Draft.

33. *Delaying of Translations and National Fees.*—Under the 1968 Draft, the applicant would have the guarantee that no State may require him to furnish a copy of his application and a translation of the same, or to pay the national fees, prior to 20 months after the priority date if the State is a designated State, and 25 months after the priority date if the State is an elected State. This guarantee did not exist in the 1967 Draft.

34. *Delaying of National Procedure.*—Under the 1968 Draft, the applicant has the guarantee that the examination and other processing of his application will not be started in the national Office of the designated or elected States prior to the expiration of the said 20-month or 25-month periods. No such guarantee existed in the 1967 Draft.

35. *One Versus Several Searching Authorities.*—Although according to present plans there would be several Searching Authorities, there is *nothing* in the 1968 Draft which would require the existence of more than one Searching Authority. The 1967 Draft was based on the premise that there will always be several Searching Authorities. Under the 1968 Draft, the Treaty could be operated with a single Seaching Authority and no change in the Treaty would be required for the switching from a system with several Searching Authorities to a system with only one Searching Authority.

36. *Amendment of Claims.*—Under the 1968 Draft, the applicant will be guaranteed the right to amend the claims not only in the international phase but also before the national Office of each designated State, even if that State has a "registration system." No such guarantee was provided for in the 1967 Draft.

37. *No Automatic Effects.*—It is no longer proposed that inaction by the national Office of a designated State could lead to the maturing of the international application into a national patent in that State. Under the 1968 Draft, such a patent will always have to be issued, that is, it will have to be the result of an act (and not of an omission or of inactivity).

38. *Confidential Handling.*—Unlike the 1967 Draft, the 1968 Draft provides for detailed guarantees for the confidential handling of the international application: (i)

the International Bureau and the Searching Authorities may not allow access to it prior to international publication; (ii) no national Office may allow access to it until international publication or receipt of the communication of the application with the search report, or prior to the expiration of the 20th month from the priority date, whichever is the earliest.

As to "Phase II"

39. *Limited Scope of Examination.*—It is no longer proposed that international examination go into alomst all questions of patentabilty. Under the 1968 Draft, such examination would mainly go into the questions of novelty, inventive step (non-obviousness), and industrial applicability.

40. *No Automatic Effect.*—It is no longer proposed that inaction by the national Office of an elected State could lead to the maturing of the international application into a national patent in that State. Under the 1968 Draft, such a patent will always have to be issued, that is, it will have to be the result of an act (and not of an omission or inactivity).

41. *No "Certificates of Patentability."*—Because of the changes outlined in the preceding two paragraphs, the expression "international certificate of patentability" has been abandoned. The document issuing after the international examination—which is called "preliminary" to recall that it is not the final one (the final being the national examination)—is called in the 1968 Draft "the international preliminary examination report."

42. *Where to File Demand?*—It is no longer proposed that the demand for international preliminary examination be presented to the International Bureau. Under the 1968 Draft, the demand will have to be presented direct to the competent Preliminary Examining Authority.

43. *No International Review.*—It is no longer proposed that the opinion of the Preliminary Examining Authority be subject to a kind of appeal to an International Review Board. The very institution of such a Review Board is no longer proposed. Instead, a guarantee similar to that described in paragraph 27, above, is provided for the applicant.

44. *Faster Procedure.*—Since, under the 1968 Draft, the demand for preliminary examination will be presented direct to the Preliminary Examining Authority (rather than through the International Bureau), since also the examination will go into less detail, and there will be no review instance, procedure, in Phase II, will also be simpler and faster than it would have been under the 1967 Draft.

45. *No Limits for Substantive Law.*—It is no longer proposed that the Treaty contain an enumeration of the grounds on which a State may may deny the grant of a national patent. Under the 1968 Draft, any State can deny the grant of a national patent on any grounds. Consequently, any substantive rules of the patent law of any country are and will be compatible with the Treaty.

46. *No Limits for Procedural Law.*—The 1968 Draft does not contain any provisions on national procedures except that the applicant will be guaranteed an opportunity to amend the claims and the description before the national Office of any elected State. Otherwise, any procedural rules of the patent law of any country are and will be compatible with the Treaty. As to the guarantee that the national procedure will be delayed for a minimum time, see paragraph 34, above.

47. *Confidential Procedure.*—It is no longer proposed that the results of the international examination be published. Under the 1968 Draft, no information will be given to third parties, other than the elected Offices, on the demand for preliminary examination, the withdrawal of a demand, the election of a State, the withdrawal of an election, or the issuance, contents, or non-issuance, of a preliminary examination report.

PCT/III/4—Original: English—July 15, 1968

SUMMARY OF THE PROPOSED TREATY

CONTENTS

THE PRESENT DOCUMENT

1. The present document is an explanatory memorandum concerning the system of international patent[1] cooperation which would result from the proposed Treaty, that is, the Patent Cooperation Treaty ("PCT").

[1] Unless otherwise shown by the context, whenever the expression "patents" is used in this document, "inventors' certificates" should also be understood for the purposes of those countries (mainly the Soviet Union) where inventions may be protected through patents or through inventors' certificates.

2. It states the aims of the proposed Treaty, briefly describes it, calls attention to some of its special features, describes the instruments which—in addition to the Treaty itself—would have to be drawn up, enumerates its main advantages, and examines its relation to other existing or planned systems of international cooperation in the patent field.

AIMS OF THE PROPOSED TREATY

3. The proposed Treaty has two principal aims.

4. One is to save effort—time, work, money—both for the applicant and the national Offices[2] in cases where patents are sought for the same invention in a number of countries.

[2] "National Office," throughout this document, means the government authority of each Contracting State which is entrusted with the issuance of patents.

5. The other is to increase the likelihood of issuing strong patents in countries not having all the facilities necessary for a thorough search and examination. By "strong" patents are meant patents likely to withstand challenge in the courts.

6. The saving of effort for the applicant would primarily consist in allowing him to file one application (in one place, in one language, for one set of fees), having—subject to certain conditions—the effect of a national application in each and all of the Contracting States in which he desires to obtain protection.

7. The saving of effort for the national Offices would primarily consist in receiving search reports and possibly also preliminary examination reports, both of which would considerably reduce the work of examination.

8. The likelihood of issuing stronger patents would follow from the fact that the international search reports and the preliminary examination reports would be issued by authorities which are among those best known for their great expertise in the matter of searching and examining patent applications.

BRIEF SUMMARY OF THE PROPOSED TREATY

Three Main Features and Two Phases

9. The proposed Treaty consists of three main features: international application, international search, and international preliminary examination. The first two are inseparable in the sense that the only way to international search is through the filing of an international application[3] and that all international applications are subject to international search. These two features are mandatory: every State becoming party to the PCT would apply them and no applicant choosing to use the PCT could avoid them. These two features, together, are usually referred to as "the First Phase" of the PCT, or, because the provisions relating to them are contained in the first Chapter of the Draft, as the procedure "under Chapter I."

[3] If an applicant obtains from a Searching Authority a search conforming to the criteria provided for in the PCT but carried out on his *national* application ("international-type search"), the said Searching Authority would have to consider, when it receives the *International* application, whether the search already effected could contribute, wholly or partly, towards the international search and whether, accordingly, some refund of the international search fee could be made.

10. The third feature—international preliminary examination—is optional. Any contracting State could decide not to adhere to those provisions of the Treaty which concern international preliminary examination, and each applicant could decide for himself whether he wanted to take advantage of international preliminary examination. This feature is usually referred to as "the Second Phase" of the PCT, or, because the provisions relating to it are contained in the second Chapter of the Draft, as the procedure "under Chapter II." Naturally, for States or applicants choosing not to use Phase II, Phase I is not the first but the only international phase.

Steps Constituting the First Phase

11. The FIRST PHASE would consist of the *following steps:* the applicant would file an international application with his national Office ("the Receiving Office"); this Office would check the application to see whether it was in order as to form, particularly whether it complied with those minimum requirements which would enable it to acquire a filing date; the same Office would send one copy of the application to the International Bureau (for the purposes of the record) and one copy to the Searching Authority (it should be noted tht the Receiving Office and the Searching Authority may be one and the same); the Searching Authority would search the application, that is, would try to discover any relevant prior art, and would establish a report ("the search report") which would consist of bare citations of documents believed to be relevant for the purposes of examination; the search report would first be communicated to the applicant, who could maintain the application as it is, withdraw it, or amend the claims; the application, together with the search report, would then[4] be communicated to the national Office of each Contracting State designated by the applicant. It is only then[4]—and only if the application does not go on to Phase II—that the national fees (if any) and the translations (if there is a language difference) would become due, and processing and examination by the said national Office ("the national phase") could start.

[4] Any designated State could, however, require that a copy of the application be given to its Office even if the search report is not yet completed, and that the national fees be paid and the translations be furnished to such Office before the regular communication of the application, but *none* of this could be required prior to the expiration of *20 months* after the priority date. Since, in all typical cases, the international search will have been completed by that time, this possibility would rarely arise and merely serves the purpose of assuring designated Offices that they would not have to wait indefinitely.

12. The international application would be published by the International Bureau, but never earlier than it would have to be published in any case under the domestic law of a designated State and never before the expiration of 18 months after the priority date.

13. The Treaty would make no provision for the national phase except that it would guarantee that it could not start until at least the expiration of the 20th month after the priority date, and that the applicant will be given an opportunity, in each designated State, to amend the claims. This would be true even in respect of States having a "registration" system. Otherwise, each State could maintain its present patent law, or could change it as it pleases in the future, subject only to the restriction that it would not be allowed to prescribe different, stricter, formal requirements for the application than the PCT prescribes.

14. Any international search would have to conform to the same standards, irrespective of the identity of the Searching Authority (see also paragraphs 25 to 27, below).

Effects of the First Phase

15. The filing of an international application would have two legal effects:

(i) the international application would have the effect of a national application in each and all of the designated States;

(ii) the processing of the application before the national Offices would be delayed—that is, would not start—(except at the express request of the applicant) at least until the expiration of 20 months after the priority date and, normally, until the international search report has become available.

16. Each of these legal effects has important practical consequences.

17. The first, that the applicant could cause the existence of applications in *many* countries by filing *one* application in *one* language, and paying *one* set of fees.

18. The second, that national processing will start under far more advantageous conditions both for the applicant and for the national Offices than without the PCT: for the applicant, because he will have a more informed opinion on the value of his invention; for the national Offices, because a substantial part of the examination task—namely, the searching for priort art—will already have been completed. Furthermore, that the furnishing of translations (where there is a language difference) and the payment of national fees (if any) would become due much later—at least 8 months later—than without the PCT.

Steps Constituting the Second Phase

19. The SECOND PHASE would consist of the following steps: the applicant would demand international preliminary examination; the demand would be addressed to the Preliminary Examining Authority; that Authority would conduct the preliminary examination, which would essentially be directed to the questions whether the claimed invention was new, represented an inventive step (was non-obvious), and was industrially applicable; the applicant and the Authority would communicate with each other during the preliminary examination and the applicant would be given at least one opportunity to amend, in response to a written opinion, the claims and the description; then the preliminary examination report would be established; this report would not contain any statement on the question whether the claimed invention is or seems to be patentable or unpatentable according to the law of any country; it would state—by a simple "Yes" or "No"—in relation to each claim whether such claim seems to satisfy the said three criteria; the statement would be accompanied by citations and any necessary, brief explanations; finally, the report would be transmitted to the national Offices of the elected States. It is only then [5] that the national fees (if any) and the translations (if there is a language difference) would become due, and processing and examination in the said national Offices ("the national phase") could start.

[5] Any elected State could, however, require that a copy of the application be given to its national Office even if the preliminary examination report is not yet completed, and that the national fees be paid and the translations be furnished to such Office before the communication of the preliminary examination report, but *none* of this could be required prior to the expiration of *25 months* after the priority date. Since, in all typical cases, the international preliminary examination will have been completed by that time, this possibility would rarely arise and merely serves the purpose of assuring elected Offices that they would not have to wait indefinitely.

20. The preliminary examination report would not be published. The very fact that preliminary examination was requested would remain confidential. Possible withdrawal of the demand and the results of the preliminary examination would be equally confidential.

21. Any preliminary examination report would have to conform to the same standards, irrespective of the identity of the Preliminary Examining Authority (see also paragraphs 25 to 27, below).

22. The Treaty would make no provision for the national phase except that it would guarantee that it could not start until at least the expiration of the 25th month after the priority date, and that the applicant will be given an opportunity, in each elected State, to amend the claims. Otherwise, each State could maintain its present law, whether on the substance of patentability or on the procedure, as the Treaty would contain no other requirements to which the national law would have to conform.

Effects of the Second Phase

23. The only legal effect of using the Second Phase would—as already indicated—be that the processing of the application before the national Offices would be delayed—that is, it would not start—at least until the expiration of the 25th month after the priority date and, normally, until the international preliminary examination report has become available.

24. The practical effect of using the Second Phase would be of the same kind—but to a greatly enhanced degree—as that of the First Phase: national processing will start under very much more advantageous conditions both for the applicant and the national Offices than without the PCT or with Phase I only of the PCT. The applicant will have, thanks to the preliminary examination report, a strong indication of his chances of obtaining patents. The elected national Offices will save most, if not practically all, of the effort of examination. All that would remain for them to do, under normal circumstances, would be to draw conclusions from the report on the question of patentability in the light of their domestic laws.

SOME SPECIAL FEATURES OF THE PROPOSED TREATY

Searching and Preliminary Examining Authorities

25. It is expected that the International Patent Institute will be one of the Searching and Preliminary Examining Authorities, that is, that it will establish both international search reports and international preliminary examination reports.

26. Furthermore, it is expected that some of the national Offices will be Searching and/or Examining Authorities. The Treaty would prescribe criteria: minimum documentation, minimum staff, minimum language capacity. To date, the national Offices of four countries have indicated, unofficially, that they would probably wish to become Searching and Examining Authorities. They are: Germany (Federal Republic), Japan, Soviet Union, United States. The United Kingdom Patent Office indicated, unofficially, that it probably would wish to become a Preliminary Examining Authority but not a Searching Authority. The Nordic countries are considering pooling their resources for such purpose.

27. In the course of the various meetings held so far, the representatives of most of the non-governmental organizations have urged that search be conducted by one authority only, namely, the International Patent Institute, because they see no other way to ensure that the search reports will be of a uniform kind and quality, irrespective of the origin of the application. The Draft allows for both this—the so-called "centralized search"—solution and for a solution providing for several Searching Authorities. But it must be stated that the present intention is to have several Searching Authorities, as indicated above. The main reasons are of a practical nature: it is cheaper and easier to use the existing facilities than to boost those of the International Patent Institute; it is more convenient—at least to German, Japanese, Soviet and U.S. applicants—to be nearer to the Searching Authority and to turn to Services they are used to; international applications could probably not be filed either in the Japanese language or in the Russian language if they were to be searched in the International Patent Institute. Furthermore, uniformly high quality of search is not out of the question even if there are several Searching Authorities. Strong and practical measures are all that is needed to enforce such uniformity. The building of a common data bank, and uniform mechanized retrieval, would seem to be the most effective of such measures. Steps would have to be taken to start to work towards achieving this goal as soon as the PCT enters into force. The matter is mainly one of money. The PCT itself could provide for it. Other measures are already provided for in the Draft; among them, identical minimum documentation in each Searching Authority, obligation to use such documentation, and the establishment of mechanisms for mutual consultations.

28. In any case, as already indicated, the Draft is so constructed that centralized search could be instituted without having to change the Treaty, should experience show that decentralized search is not entirely satisfactory and should those national Offices which are now unofficial candidates for the role of Searching Authorities be ready to renounce such a role.

Length of the Procedure

29. The following paragraphs deal with the typical case—the case which may be expected to be the normal case. The procedure may, in non-typical cases, take a shorter or a longer time than is indicated below.

30. All time limits relate to the priority date.

31. *Phase I.*—The international application is filed at the end of the 12th month. It is transmitted to the Searching Authority and the International Bureau at the end of the 13th month.[6] The search is carried out during the next three months (the 14th, 15th and 16th) but in time for the search report to be sent to the applicant in the course of the 16th month. The applicant has two months (the 17th and the 18th) to amend the claims, and the following two months (the 19th and the 20th) to prepare the required translations. (He will have to pay the national fees and furnish the translations at the earliest by the end of the 20th month.)

[6] The one month after international filing (the 13th month) should be enough for a security check since the national application whose priority is invoked in the international application has been known for a year to the Receiving Office. But, if the one-month period is not sufficient, the Receiving Office may require that international applications be filed a few weeks earlier—as is the case today when a security clearance must be obtained before the priority year expires.

32. *Phase II.*—The applicant, having received the search report by the end of the 16th month,[7] uses the 17th and 18th months not only to amend the claims but also to make up his mind whether to demand international preliminary examination. He files this demand by the end of the 18th month. The first written opinion issues two months later, by the end of the 20th month. The applicant has two months (the 21st and the 22nd) to reply to the opinion. The Preliminary Examining Authority issues the report one month later, that is, by the end of the 23rd month. The applicant has the following two months (the 24th and the 25th) to prepare the required translations. (He will have to pay the national fees and furnish the translations at the earliest by the end of the 25th month.)

[7] If preliminary examination is demanded before the search is started, and if it is the same Authority which would perform the search and the preliminary examination, the two procedures could be "telescoped" in part. The first opinion could issue at the same time as the search report, that is, by the end of the 16th rather than the 20th month. The four months so gained could be used to allow for a second written opinion and a second reply in the preliminary examination phase.

Languages

33. *International applications* would have to be drawn up in a language which the competent Searching Authority can handle. The national Offices of Moscow, Munich, Tokyo and Washington would thus accept international applications drawn up in Russian, German, Japanese, and English, respectively. The International Patent Institute could handle applications in Dutch, English, French, and German. If Italy and a few Spanish-speaking countries become party to the PCT, the International Patent Institute could probably undertake to handle applications in Italian or Spanish, respectively.

34. *Search reports* and *preliminary examination reports* would be drawn up in the language in which the application to which they relate is published.

35. *Translations* of the international applications, when translations are required for the purposes of the national procedure, would be prepared by the applicant. The search reports and the preliminary examination reports would be translated into five languages (English, French, German, Japanese, Russian) and the translations would be prepared under the responsibility of the International Bureau.

36. The *publication*, in pamphlet form, of the international application would be effected in the language in which it was filed, if filed in English, French, German, Japanese, or Russian. If it was filed in another language, it would be published in English. If the application is published in French, German, Japanese, or Russian, the abstract and the search report would appear in the pamphlet in two languages: the language of the application and English. The first page of the pamphlet would contain bibliographical data, a typical drawing (possibly reduced), and the abstract, to facilitate a quick appraisal and to make this frequently possible even when the language of the application is unknown to the reader.

37. The *Gazette entry* in respect of each application would consist of these same three elements. The Gazette would be published at least in English and French and also in additional languages for which the necessary subscriptions or subventions would be assured. German, Japanese and Russian would almost certainly, and Spanish probably, be among such languages.

38. *Availability of full translations to third parties.*—When the applicant furnishes for the first time in any given language a translation of the international application to the national Office of any designated or elected State, he will furnish a copy of such translation to the International Bureau. The latter will make such translation available to third parties once the international application has been published in its original language.

Fees

39. *First Phase.*—The filing of an international application would be subject to the payment of one fee in any case, and possibly one or two additional fees.

40. The fee which would be due in any case is called the *"international fee."* It would be destined to cover the expenses of the International Bureau, including the cost of preparing copies for the designated Offices, the cost of publication, and the cost of translating the search report. It would be a flat sum except that the fee would increase if the application document contained more than 50 sheets.

41. Each Receiving Office could, if it wishes, charge a *"transmittal fee,"* destined to cover the expenses of formality checking and transmittal of copies to the International Bureau and the Searching Authority.

42. Each Searching Authority could, if it wishes, charge a *"searching fee"* for the work of performing the international search. Some national Offices may decide not to charge a searching fee at all. The International Patent Institute would doubtless have to charge a fee but whether all of it will be covered by the applicant or whether part of it may be covered by the subventions granted by the State of the applicant is a question to which the answer will probably vary from State to State.[8]

[8] All the fees referred to in paragraphs 40 to 42 would be independent of the number of States designated by the applicant. But the national Office of each designated State may, when the international application reaches it, require the payment of the usual *national* filing fee.

43. The question frequently asked is what is the minimum number of countries that ought to be designated to make the use of the PCT route "worthwhile." It is believed that choosing or not choosing the PCT route does not generally depend on the designation of a particular minimum number of countries. It will be worthwhile choosing the PCT route if the applicant wishes to have more time for reflection, if he wishes to postpone the moment when he has to pay the cost of preparing translations and the national fees, and if he wishes to reduce or eliminate the number of national proceedings in which he would otherwise have to engage only to abandon them later if he lost interest in his application or lost hope in its success. The essential question is how much investment such advantages are worth. But if one insists on a mathematical comparison of the costs and fees of an international application with the costs and fees of national applications filed outside the PCT, it is believed that, generally, the preparation and filing of two national applications will cost at least the same as, if not more than, the international application, provided they are not in the same language. In fact, the cost of translating, redrafting and redrawing in respect of an application, even if done once only, would probably generally cost as much as the preparation and fees of an international application.

44. *Second Phase.*—The demand for a preliminary examination would be subject to the payment of one fee in any case, and possibly one additional fee.

45. The fee which would be due in any case is called the *"handling fee."* It would be destined to cover the expenses of the International Bureau, including the cost of preparing copies and translations of the preliminary examination report for the national Offices of the various elected States.

46. Each Preliminary Examining Authority could, if it wishes, charge a *"preliminary examination fee."* The situation would be similar to that described in connection with the searching fee (see paragraph 42, above).

47. *Amounts.* The amounts of the international fee and of the handling fee would be fixed in the Regulations. Further study is required to be able to indicate these amounts. In any case, they will be modest as a substantial part of the expenses is expected to be covered by income derived from the sale of publications.

48. The amounts of the other fees will be fixed by the competent Authority, except that the maximum amounts of the fees chargeable by the International Patent Institute to applicants who are nationals of countries not members of that Institute would be fixed in the agreement between the said Institute and the International Bureau. Such an agreement would require the approval of the Assembly of the States party to the PCT.

Formalities

49. One of the most outstanding features of the PCT is that the formalities of application would be set down by the PCT and would be binding on all Contracting States. This would reduce the cost to the applicant. Drawings would not have to be redrawn. The applicant would know that an application, which is good as far as form and content are concerned in his home country, is also good in any of the other Contracting States. Form and content mean not only the physical requirements and the identification data but also the form and method of claiming and describing.

50. It has been said that this very uniformity is dangerous as far as the form and method of describing and claiming are concerned. The form and method prescribed by the PCT—say the same critics—may be contrary to the traditions, the judicial practice, and the idiosyncrasies of a country. (Of course, the form and method will not be contrary to the *laws* and *regulations* of any country, as every Contracting State would accept the prescribed forms and methods.) It is believed that this view is unduly pessimistic since, once the laws and regulations of a country accept the international forms and methods, it does not seem to be unrealistic to presume that the traditions, judicial practice, or idiosyncrasies, will adjust to these new forms and methods. Moreover, the Treaty provides its own solution as far as the claims are concerned: the applicant will have a right to rewrite his claims before each national Office, and he may rewrite them before each such Office differently. As far as the description is concerned, the possibility of changing it before the national Office of each country will depend on the law of that country. Where such a possibility does not

exist, or is very restricted, and when the description in the international application cannot be drawn up in such a way as to enable the applicant to derive the maximum benefit from it in that country, the best thing would be not to choose the PCT route for that country; it is believed, however, that such a situation is more theoretical than real, and that the contemplated cases, should they exist, will not substantially affect the usefulness of the PCT.

TREATY, REGULATIONS, AND OTHER INSTRUMENTS

51. It is proposed that the provisions establishing the system and governing its application be embodied, depending on their nature and their importance, in the following instruments: a Treaty, Regulations, Administrative Instructions, and agreements that the International Bureau would conclude with each Searching and Preliminary Examining Authority.

52. *The Treaty* would contain the most important matters: the limits of the obligations of the Contracting States; guarantees of their basic rights; basic obligations and guarantees of the basic rights of the applicants; the main duties of the International Bureau, the Receiving Offices, the Searching and Preliminary Examining Authorities. Most of the provisions of the Treaty could be amended only in the classical way: the amendments would have to be adopted by a special conference and would come into effect only if a certain number of countries ratified them. Since ratifications are by nature slow (because, in many States, they have to be processed through legislative bodies), one should, ideally, write only such provisions into the Treaty itself as are unlikely to change for decades. The Draft provides, however, for two sets of provisions, so that they may be changed by a less cumbersome and less slow procedure. One is that all time limits fixed in the Treaty could be modified by a unanimous decision of the Contracting States. The other is that some of the purely administrative provisions, mainly those relating to the Secretariat and the finances of the PCT Union, could be amended by the Assembly of the PCT Union. As to the latter, the same solution was written into the Paris Convention and the Special Agreements under that Convention at the Stockholm Conference of 1967.

53. *The Regulations,* as proposed, would be several times longer than the Treaty as they embrace all the details which are believed to have any possible effect on, or be of any possible interest to, the applicant, the Contracting States, and the Searching and Preliminary Examining Authorities. It is expected that, originally, they would be adopted by the same diplomatic conference as will adopt the Treaty. Once the Treaty comes into force, they could be amended by the Assembly. Amendment would require unanimity for certain specified provisions, and a two-thirds majority for the others.

54. *The Administrative Instructions* would pick up those minutiae which have no effect on the rights and obligations of anybody but which are useful because they introduce order and uniformity into official procedures. Where to place a stamp, how to draft forms transmitting documents, how to route papers—these would be typical subjects which the Administrative Instructions would deal with. They would be drawn up by the International Bureau under various safeguards, including the right of the Assembly of the Contracting States to impose the introduction of modifications.

55. *Agreements with Searching and Preliminary Examining Authorities.*—These agreements would see to it that the search and the preliminary examination will be carried out in strict conformity with the Treaty and the Regulations. Furthermore, they would provide for other procedural and administrative details required to ensure smooth cooperation among the Authorities whose joint efforts are necessary to make the system work. The agreements, as far as the International Bureau is concerned, would require approval by the Assembly of the Contracting States. As far as the other party to each agreement is concerned, the question of approval is a matter for such party. For example, the International Patent Institute would probably have to obtain the approval of its Administrative Council before it could become bound by any such agreement.

MAIN ADVANTAGES OF THE PROPOSED TREATY

For Examining Offices

56. National examining Offices would be able to make substantial economies since the proposed system would render superfluous all or most of the work of searching, and also—when an international preliminary examination report issues—most of the work of examination, for most applications filed by foreigners. In the overwhelming majority of countries, such applications exceed in number applications filed by nationals. Germany (Federal Republic), Japan, and the United States, are among the rare exceptions but, in these countries, the absolute number of foreign applications is in itself impressive (31,000, 23,000, and 22,000, respectively, in 1966) and has been approached or exceeded in only three countries (33,000 in the United Kingdom, 32,000 in France, and 28,000 in Canada). Some of the Socialist countries are also among the exceptions but, owing presumably to the recent intensification of East-West trade and expanding scientific and technical cooperation, the number of foreign applications filed in these countries is constantly and rapidly growing. In the Soviet Union, for example, the number doubled from 1965 to 1966.

57. Even national Offices which were distrustful—and in the beginning, they might well be—as to the quality of the international search reports and preliminary examination reports, and which subjected each of them to a complete or partial verification, would have a "flying start" in their work, since such work would be in the nature of completing, checking, criticizing, rather than starting from scratch in complete isolation, as national Offices do at present.

For Non-Examining and Examining Offices

58. Both kinds of national Offices would make economies in the cost of handling applications, since their work of verification as to compliance with prescriptions of form would become practically superfluous.

59. Both kinds of Offices could save part of the cost of publishing. If the international publication is in their national language, they could forgo republication altogether, or they could decide to publish only the abstracts

in their national gazettes. This solution could be chosen even by countries which have a different language: they might find it sufficient to publish, in their national language, abstracts only, and to keep the complete translations in their files, copies of which could be ordered by anyone who, on the basis of the abstracts or the full foreign texts, become interested.

60. The proposed system would not diminish the revenues of Patent Offices unless they voluntarily decided to give a rebate on national fees in consideration of the savings they would make through the PCT and in order to make the PCT route more attractive to the applicant. Such rebates would be more than offset by savings in expenditure thanks to the PCT. In any case, the most "profitable" source of revenue of most national Offices is the renewal fees. The system would not touch these fees either, unless, again, voluntary rebates are accorded.

For the Inventor or Applicant

61. Applicants—that is, inventors or their employers or assignees—would have more time to make up their minds as to the foreign countries in which they want to seek protection, and they would have to spend much less money in the pre-grant (or pre-denial) stage than at present.

62. Today, an applicant must start preparations for filing abroad three to nine months before the expiration of the priority period. He must prepare translations of his application and must have them put in a more or less different form for each country. Under the proposed system, the applicant, within the priority year, would make only one application (the international application), which may be identical both as to language and form with his own national application, or which involves one—and only one—translation and redrafting. True, the cost of further translations will eventually have to be met, but only eight or more months latter than under the present conditions, and only if, having seen the international search report, the applicant is still interested in the countries concerned. Moreover, the—even greater—cost of redrafting (recasting as to form and expression) for each and every country will, even later, either not arise at all or only to a limited extent (when the claims are amended or the description is changed).

63. The international search report would help the applicant to make up his mind whether it is worthwhile continuing his efforts. If he decides that it is not, he will save all subsequent costs, including the feed for a demand for an international preliminary examination report.

64. The international preliminary examination report would further help the applicant to make up his mind whether to press for national patents. And if the report is unfavorable, he will think twice before pressing for national patents.

65. All the applicants residing in a country whose national Office is a Preliminary Examining Authority would be able to conduct their dialogue concerning the issuance of the international preliminary examination report with the Office with which they are most *familiar* and which is geographically *near*, and in their own *language*.

66. Even those applicants not residing in such a country would frequently be able to use an Authority in which they have special confidence (for example, the International Patent Institute), which may be nearer than most of the countries in which they seek protection, and in a language which may be their own but, in any case, is a world language, generally known in scientific and technological circles.

67. It is true that, where complications arise, the applicant might have to operate, as he does today, in unfamiliar and distant Offices and in languages with which he is totally unfamiliar. But by that time he would have in his arsenal an international search report and possibly an international preliminary examination report, both of international standing. He, too, would have a "flying start."

For Developed Countries

68. Developed countries have relatively great numbers of inventors. They would constitute the majority of applicants. The savings achieved for the applicant, described above, would thus save an outflow of money from their countries.

69. By allowing stronger patents to be obtained (particularly in non-examining, developing countries) with less effort and cost, the proposed system would probably induce inventors to seek protection in more countries, and for more inventions than at the present time. This would expand the export and investment potential of the developed countries to which these inventors belong.

For Developing Countries

70. Most developing countries have a non-examining system. Whereas in developed countries the chances of granting worthless patents are diminished by the expertise both of the patent attorneys or agents assisting the applicant and of the courts, in many developing countries, these safeguards are to a large extent missing. The need for examination is thus greater in developing countries but, because of the scarcity of technically trained persons and adequate documentation, and because of the high cost of examination, such countries are even less in a position to introduce an examining system—even if they joined efforts on a regional basis—than developed countries.

71. The proposed system offers a clear and simple solution to this problem which a notable report of the United Nations Secretariat called the "dilemma [of Governments of most developing countries] between the dangers of a distorted patent system and the practical difficulty if not impossibility, of marshalling the broad range of highly qualified technicians and scientific source materials which would be needed to permit an adequate novelty search" (UN document E/4319 of March 27, 1967, page 24).

72. The solution resides in the fact that, under the proposed system, the developing countries would not need the persons and materials to make a novelty search because that search—and, even more, the preliminary examination—would be effected by the International Searching and Preliminary Examining Authorities; the solution further resides in the fact that their patent systems would not be "distorted" because applications accompanied by international preliminary examination reports would give a high degree of reliability to their patent grants. In fact, their patents would generally be just as reliable, justified, and strong, as those of the most developed countries with the most sophisticated corps of patent examiners.

73. Naturally, the proposed system would not only protect developing countries against granting patents to foreign applicants who do not deserve them and who could thus have imposed "unjustified monopoly restrictions" (*ibidem*) on their national economy, but it would also ensure that their own inventors and industrialists receive patents on which they can rely and which will not crumble when foreign competitors attack them or enter the market.

74. Developing countries, by being able to offer meaningful protection to foreign entrepreneurs owning patented technology, would find such foreign entrepreneurs more willing to transfer (sell or license) the said technology and would, in general, attract more foreign investment. The industrialization of such countries would thereby be accelerated.

75. Developing countries would derive a special benefit from the proposed system as far as technical documentation is concerned. Assembling, and using, the world's patent literature—a source *par excellence* of recent and valuable technological information—are costly, unwieldy, and present practically insuperable language problems. The proposed system would make available, in the form of applications accompanied by search reports and possibly also preliminary examination reports and easy-to-handle technical abstracts, the cream of the inventions, classified according to branches of technology, and in world languages.

For Technological Information in General

76. For developed countries, the problems referred to in the preceding paragraph are perhaps not insuperable. But even for them, the proposed system would, as a kind of by-product, make access to most of the patent literature very much easier and cheaper than under existing conditions.

For the Public

77. The proposed system would give substance to the much-quoted principle according to which applicants are granted patents in exchange for disclosure. Such disclosure, in the present system, frequently occurs only many years after the date of the application, that is, at a time when the disclosure no longer reveals anything new. In the proposed system, this could happen only under the most unusual circumstances, that is, when none of the designated States provides for the publication of applications. In most cases, at least one of the designated countries will provide for publication after the expiration of 18 months from the priority date and, in all such cases, disclosure would take place then in the form of the international publication of the application in one of the world languages, with abstracts at least in English and French, and probably other languages as well.

For the Patent System in General

78. The patent system, as it exists today, is much criticized. It is said to be wasteful of human talent, expensive, slow, and to yield in the different countries patents of such different value that they do not even deserve to be called by the same name.

79. No attempt is made here to form a judgement on these accusations. But it is beyond doubt that the proposed system, by eliminating considerable duplication in work, would avoid useless operations and diminish the cost of prosecuting patent applications. It is also certain that the proposed system would generally shorten the time required for examination and the issuance of patents and would thus also shorten the period during which the applicant, would-be licensees, and competitors, live in uncertainty, not knowing whether patents will issue or not. It is also to be anticipated that the proposed cooperation would make the value of patents more uniform.

80. Should one therefore succeed in making the seeking and granting of patents simpler and cheaper, and in making the value of patents issued by different countries more similar and, generally, stronger, one would not only have answered the criticisms levelled against the existing situation, but one would have made the patent system more useful. It would then be accepted in countries which are skeptical about its general usefulness, and it would be put to better use in countries where it exists. All this should contribute to the development of technological progress, which is so urgently needed to improve the living conditions of most of mankind.

OTHER EFFORTS FOR INTERNATIONAL CO-OPERATION IN THE PATENT FIELD

81. The drafters of the plan found much inspiration in the plans and achievements of the last two decades in the field of international patent cooperation.

82. The International Patent Institute and the International Patent Classification are, in themselves, elements without which it would be much more difficult to imagine the proposed system.

83. Work on the "European Patent" plan and the Nordic Patent System, as well as the work of the Council of Europe, were constantly kept in mind when working on the present proposals. Much is due, in these proposals, to the years of study which have been carried out in these circles.

84. It should be emphasized, however, that the proposed system is fundamenally different from the plan of the six member States of the European Economic Community. Whereas the draft Convention of the "Six" establishes an international patent, an international court procedure for judging the validity of the patent, and other provisions *after* the patent is granted (rules on duration, nullity, compulsory and other licenses, rules on infringement and its repression), the PCT draft deals with none of these subjects. It establishes no international patent; it establishes no international court; it contains no rules whatsoever on matters arising after the grant. The grant itself would remain under the exclusive sovereignty of each Contracting State.

85. Thus, the scope of the PCT proposal is much narrower. The proposed Treaty deals only with the phases of application and examination. For its implementation, it relies mainly on existing facilities. The work of searching and examination would, at least initially, be decentralized.

86. Notwithstanding the differences between the PCT proposal and the plans of the European "Six" and the Nordic countries, the former is not in conflict with either of the latter, both of which could be put into effect before or after the PCT as proposed.

PCT/III/5—Original: English—July 15, 1968

DRAFT TREATY

TABLE OF ARTICLES OF THE DRAFT PATENT COOPERATION TREATY

NOTES ON THE STRUCTURE OF THE TREATY [1]

The Draft Treaty consists of 65 Articles subdivided into "Introductory Provisions" (Articles 1 and 2), and five Chapters, dealing respectively with the following matters:

I: International application and international search
II: International preliminary examination
III: Provisions common to the matters dealt with in Chapters I and II
IV: Administrative provisions
V: Final provisions.

[1] The Notes, appearing on each page with the text of the Draft Treaty, are intended to serve two main purposes. One is to facilitate the reading of the text of the Draft Treaty by providing, where a provision refers to other provisions of the Treaty, brief information on those other provisions, so that the reader should be able to avoid, as far as possible, turning to the page on which the provisions referred to appear. The other is to enable the reader to find rapidly in the Regulations the Rules which pertain to any given provision of the Draft Treaty. To this end, the pertinent Rules are referred to by their number and in most cases also by their title. The Draft Regulations are contained in document PCT/III/6.

The Notes are not intended as a commentary.

Patent Cooperation Treaty

(DRAFT)

INTRODUCTORY PROVISIONS

NOTES TO THE INTRODUCTORY PROVISIONS

The "Introductory Provisions" consist of two Articles, one dealing with the establishment of the "International Patent Cooperation Union" (Article 1), the other with definitions (Article 2).

ARTICLE 1

Establishment of a Union

The States party to this Treaty (hereinafter called "the Contracting States") constitute a Union for cooperation in the filing, searching, and examination, of patent applications, to be known as the International Patent Cooperation Union.

NOTES TO ARTICLE 1

"Contracting States" are the States which are bound by the treaty: see Articles 57 (Becoming party to the Treaty), 58 (Entry into force of the Treaty), and Article 59 (Effective date of the Treaty for States not covered by Article 58). Only States members of the Paris Union may become Contracting States (see Article 57).

A State may be a Contracting State without being bound by the provisions of Chapter II (International Preliminary Examination): see Article 60(1).

ARTICLE 2

Definitions

(1) The definitions given in paragraph (2) shall apply for the purposes of this Treaty and the Regulations.

(2)(a) *National Office* means the government authority of a Contracting State entrusted with the task of granting patents; where several States have entrusted an international authority with the task of granting patents and the Contracting State is one of these States, "national Office" means also such international authority.

(b) *Designated Office* means the national Office of the State designated by the applicant under Chapter I of this Treaty.

(c) *Elected Office* means the national Office of the State elected by the applicant under Chapter II of this Treaty.

(d) *Receiving Office* means the national Office or the international administration with which the national application has been filed.

(e) *Priority date*, for the purposes of computing terms fixed in this Treaty and the Regulations, means:

(i) where the international application claims the priority of an earlier national application, the filing date of such national application;

(ii) where the international application claims the priorities of more than one earlier national application, the filing date of the earliest among such national applications;

(iii) where the international application does not claim the priority of any earlier national application, the filing date of the international application.

(f) *Organization* means the World Intellectual Property Organization.

(g) *International Bureau* means the International Bureau of the Organization and, as long as it subsists, the United International Bureaux for the Protection of Intellectual Property (BIRPI).

(h) *Director General* means the Director General of the Organization and, as long as BIRPI subsists, the Director of BIRPI.

(i) *Union* means the International Patent Cooperation Union.

(j) *Assembly* means the Assembly of the Union.

(k) *Record copy* means the copy of the international application destined for the International Bureau.

(l) *Search copy* means the copy of the international application destined for the Searching Authority.

NOTES TO ARTICLE 2

Paragraph (1): ——.

Paragraph (2)(a): See Articles 2(2)(b)(c)(d), 10(1), (2), (3), 22[1], [1*bis*], 30(2), 37(4)(b), 40(1), (2), 49, 51(6).

The African and Malagasy Industrial Property Office and, once it is established, the European Patent Office, would be international authorities of the kind referred to in this definition.

Paragraph (2)(b): See Articles 13(1), 20, 23(1), (2), (3), 25(1), (2), 26(1), 28.

Paragraph (2)(c): See Articles 31(7), 36(3)(a)(b), 38(1), 40(3), 41, 42.

Paragraph (2)(d): See Articles 10(4), 11(1), 11(1)(i), 12(1)(a), (2), 14(1)(a)(b), (3), (4), (5), 16(2).

Paragraph (2)(e): See Articles 4(2), 12(3), 13(2), 21(2)(a), (b), (i), 22[1], [1*bis*], 23(1), 39, 40(1), (2).

Paragraph (2)(f): See Articles 50(2)(b), (9)(a)(b), 53(1)(b)(c), (2), (7)(c), (8)(a)(b).

Paragraph (2)(g): See Articles 12(1)(a), (2), (3), 13(1), (2), 16(3)(b), 17(1), (2)(a), 18(2), (3), 19, 20, 21(1), (5), 25(1), 30(1)(a), 31(6)(b), 34(1), 36(1), (2)(b), (3)(a), 37(3)(a)(b), 38(1), (2), 49, 50(2)(a)(iii), 51(1), (2), (5), (6), (8)(a)(b), (9), 53(3)(i)(ii), (4).

Paragraph (2)(h): See Articles 50(2)(iv), (9)(a)(b)(c)(d), 51(3), (4), (7), (8)(c), 52(2)(b), 53(7)(c), 54(3), 56(1)(a)(b), (3)(a), 57(2), 60(1)(b)(c), 62(1), (2), 63(1)(b), 64(1), (2), (3), 65.

Paragraph (2)(i): See Articles 1, 50(2)(a)(i)(iv)(v)(vi)(vii)(ix)(xii), (8), 51(1), (2), (3), (4), 53(1)(a)(b)(c), (2), (3), (3)(i)(ii), (5)(d)(e), (7)(a), (9), 56(3)(b).

Paragraph (2)(j): See Articles 9(3)(a), 16(3)(a)(b), (4)(a)(b), 47(2)(b), 50(1)(a), (2)(a), (4), (5)(a)(b), (6)(a), (8), (9)(a)(b)(c), 51(4), (5), (7), (8)(a), 52(1), (2)(a), (4), 53(5)(b)(c)(d), (7)(a)(b)(c), (8)(a), (9), 54(3), 55(2), 56(1)(a)(b), (2)(a), (3)(a)(b), 61, 63(1)(b).

Paragraph (2)(k): See Articles 12(1)(a)(b), (2), (3).

Paragraph (2)(l): See Article 12(1)(a).

CHAPTER I: INTERNATIONAL APPLICATION AND INTERNATIONAL SEARCH

NOTES TO CHAPTER I

This Chapter, entitled "International Application and International Search," contains 28 Articles (Articles 3 to 30).

The Articles are arranged in a sequence which generally follows the chronology of events in the procedure: Articles 3 to 21 deal with what could be called "the international phase," whereas Articles 22 to 29 deal with what could be called "the national phase." Article 30 relates to both phases.

The international phase consists of two main features, the application (Articles 3 to 14) and the international search (Articles 15 to 18), and one necessarily subsequent event (amendment of claims before the International Bureau, Article 19) and two usually subsequent events (the communication to the designated Offices, Article 20, and the international publication, Article 21).

The national phase concerns what happens in the designated State in connection with the international application, except that the main effect of the international application—namely, that it has the effect of a national application in each designated State—is already mentioned in Article 11 (more precisely, in Article 11(2)) in connection with the filing date in order to underline the fact that the said effect is simultaneous with the international filing.

ARTICLE 3

The International Application

(1) Applications for the protection of inventions in any of the Contracting States may be filed as international applications under this Treaty.

(2) An international application shall contain, as specified in this Treaty and the Regulations, a request, a description, a claim or claims, one or more drawings (where required), and an abstract.

(3) The international application shall:

(i) be in a prescribed language;

(ii) comply with the prescribed physical requirements;

(iii) comply with the prescribed requirement of unity of invention;

(iv) be subject to the payment of the prescribed fees.

NOTES TO ARTICLE 3

Paragraph (1): As to the meaning of "inventions," see Rule 3 (Subject to the international application).

Paragraph (2): As to "request," "description," "claims," and "drawings," see Articles 4, 5, 6, and 7, respectively. As to "abstract," see Rules 9 (The abstract), 10 (Terminology and signs), and 11 (Physical requirements of application). As to the lack of abstract or incorrect abstracts, see Rules 36.1, 36.3, and 40.2.

Paragraph (3) (in general): "Prescribed" means as provided in the Regulations (see Article 54(1)(i)).

Paragraph (3)(i): See Rule 12 (Language of the application).

Paragraph (3)(ii): See Rule 11 (Physical requirements of the application).

Paragraph (3)(iii): See Rule 13 (Unity of invention).

Paragraph (3)(iv): See Rules 14 (Transmittal fee), 15 (International fee), 16 (Searching fee).

ARTICLE 4

The Request

(1) The request shall contain:

(i) a petition to the effect that the international application be processed according to this Treaty;

(ii) the designation of the Contracting State or States in which protection for the invention is desired on the basis of the international application ("designated States");

(iii) the name of and other prescribed data concerning the applicant, the inventor, and the agent (if any);

(iv) the title of the invention.

(2) Any Contracting State not designated in the request may be designated later but not after the expiration of one year from the priority date.

(3) Unless the applicant asks for another kind of protection under Article 45, designation shall mean that the desired protection consists of the grant of a national patent in the designated State.

NOTES TO ARTICLE 4

Paragraph (1) in general: As to the form of the request, see Rule 4; as to its contents, see Rule 5.

Paragraph (1)(i): See Rule 5.2 (Petition).

Paragraph (1)(ii): As to the kind of protection, see paragraph (3). As to the manner of designating States, see Rule 5.9.

Paragraph (1)(iii): See Rules 5.4 (Names and addresses), 5.5 (The applicant), 5.6 (The inventor), 5.7 (The agent), 5.8 (Representation of several applicants not having a common agent), and 82 (Representation).

As to who may be an applicant, see Article 9.

As to who has the right to practice before International Authorities, see Article 49.

Paragraph (1)(iv): As to the characteristics of the title, see Rule 5.3. As to the lack of title or incorrect titles, see Rules 36.1, 36.2, and 40.2.

Paragraph (2): See Rule 29 (Later designations).

As to the meaning of "priority date," see Article 2(2)(e).

Paragraph (3): Article 45 permits, where possible, asking for the grant of an inventors' certificate, a utility certificate, a utility model, or a patent of addition—rather than a patent. See Rules 5.12 and 29.4 (Choice of certain kinds of protection in the request or in the later designation, respectively).

ARTICLE 5

The Description

The description shall disclose the invention in a manner sufficiently clear and complete for the invention to be carried out by a person skilled in the art.

NOTES TO ARTICLE 5

See Rules 6 (The description), 10 (Terminology and signs), 11 (Physical requirements).

ARTICLE 6

The Claims

The claim or claims shall define the protection applied for. They shall be clear and concise. They shall be fully supported by the description.

NOTES TO ARTICLE 6

See Rules 7 (The claims), 10 (Terminology and signs), 11 (Physical requirements).

ARTICLE 7

The Drawings

Alternative A: Drawings shall be required when they are necessary for the understanding of the invention and may be included when, without being necessary for the understanding of the invention, the nature of the invention admits of illustration by drawings.

Alternative B: Drawings shall be required when they are necessary for the understanding of the invention and, even when they are not necessary for such purpose, the nature of the invention admits of illustration by drawings.

NOTES TO ARTICLE 7

Alternative A prescribes a more lenient requirement than Alternative B: the first asks for drawings when they are *necessary* for the understanding of the invention; the latter asks for drawings when the nature of the invention *admits* of illustration by drawings.

Alternative A corresponds to the European practice; Alternative B corresponds to the US practice.

As to the physical requirements of drawings, see Rule 11, particularly Rule 11.15. See also Rules 8 (The drawings) and 10 (Terminology and signs).

ARTICLE 8

Claiming Priority

The priority of a first national application, as defined in the Paris Convention for the Protection of Industrial Property, filed in a country of the Paris Union, may, in the prescribed manner, be invoked in an international application subsequently filed, with the same consequences as are provided for in that Convention.

NOTES TO ARTICLE 8

As to the meaning of "first national application," see Paris Convention, Article 4, particularly C(2) and C(4). As to the consequences provided in the Paris Convention, see Article 4—particularly B—of that Convention.

As to the manner of invoking the priority of a national application in the international application, see Rule 5.10 (Priority claim). The priority document must be submitted to the International Bureau by the expiration of the 16th month from the priority date (see Rule 17.1). As to the furnishing of copies by the International Bureau, see Rule 17.2.

ARTICLE 9

The Applicant

(1)(a) The applicant may be a natural person or a legal entity.

(b) The applicant must be the inventor or the successor in title of the inventor.

(2)(a) The applicant must be a resident or, if not a resident, a national of a Contracting State.

(b) The concepts of residence and nationality, and the application of these concepts in cases where there are several applicants or where the applicants are not the same for all the designated States, are defined in the Regulations.

(3)(a) The Assembly may, by unanimous decision, allow residents or nationals of specified States other than Contracting States to file international applications.

(b) The first such decision shall not be made earlier than five years after the entry into force of this Treaty.

NOTES TO ARTICLE 9

Paragraph (1)(a): The question of who is a natural person or a legal entity is not resolved in the Treaty. It is left to national laws.

Paragraph (1)(b): The request must contain the applicable statements: see Rule 5.6 (The request (contents): The inventor).

Paragraph (2)(a): The request must contain the applicable statements: see Rule 5.5 (The request (contents); The applicant).

Paragraph (2)(b): See Rules 18.1 (Residence), 18.2 (Nationality), 18.3 (Several applicants), 18.4 (Different applicants for different designated States).

Paragraph (3)(a): "Specified" could, for example, mean countries of the Paris Union not party to the Patent Cooperation Treaty.

Paragraph (3)(b): "Entry into force" is defined in Article 58.

ARTICLE 10

The Receiving Office

(1) Subject to the provisions of paragraphs (2) and (3), the international application shall be filed with the national Office of the Contracting State of which the applicant is a resident; if the application is not a resident of any of the Contracting States, the international application shall be filed with the national Office of the Contracting State of which the applicant is a national.

(2) Any Contracting State may permit international applications which, according to paragraph (1), would have to be filed with its own national Office to be filed with the national Office of another Contracting State, provided that the latter agrees and that the same Searching Authority is competent for the searching of international applications filed with either Office.

(3) Any decision made under Article 9(3) shall specify the national Office or international administration which will act as the Receiving Office for applications of residents or nationals not entitled to file under Article 9(2). Such decision shall require the previous consent of the said national Office or international administration.

(4) The Receiving Office shall check and process the ternational application as provided for in this Treaty and the Regulations.

NOTES TO ARTICLE 10

Paragraph (1): "National Office" is defined in Article 2(2)(a).

Where there are several applicants, the competence of the receiving national Office is determined according to Rule 19.1.

Paragraph (2): For the competence of the Searching Authorities, see Article 16(2).

Paragraph (3): Article 9(3) contemplates the possibility of allowing residents or nationals of countries not party to the Patent Cooperation Treaty to file international applications.

Paragraph (4): The checking will be, first, for the purposes of deciding whether an international filing date may be accorded (see Article 11(1)). Once that date is accorded, certain other checks will be carried out (see Article 14), but no defect discovered during this later check may result in revoking the filing date. The filing date, once accorded, remains accorded. See Notes to Article 11(2).

The processing consists in according a filing date (Article 11(1)), transmitting the international application to the International Bureau and the Searching Authority (Article 12), and carrying out checks for certain defects in the international application, issuing of invitations to correct certain defects, receiving the corrections, deciding whether they comply with the requirements, and, accordingly, either correcting the application or declaring it to be considered withdrawn (Article 14).

ARTICLE 11

Filing Date and Effects of the International Application

(1) The Receiving Office shall accord as the international filing date the date of receipt of the international application, provided that, at the time of receipt, that Office has found that:

(i) the applicant does not obviously lack, for reasons of residence or nationality, the right to file an international application with the Receiving Office,

(ii) the application is in the prescribed language,

(iii) the subject of the application is not obviously outside the purview of this Treaty as defined in the Regulations, and,

(iv) at the time of receipt, the application contained at least the following elements:

(a) an indication that the application is intended as an international application,

(b) the name of the applicant,

(c) a part which on the face of it appears to be a description,

(d) a part which on the face of it appears to be a claim or claims.

(2) Any international application fulfilling the requirements of paragraph (1) shall have the effect of a regular national application in each designated State as of the international filing date.

(3) Any international application fulfilling the requirements listed in items (i) to (iv) of paragraph (1) shall be equivalent to a regular national filing within the meaning of the Paris Convention for the Protection of Industrial Property [in the London, Lisbon, and Stockholm Acts: Article 4A(2)].

NOTES TO ARTICLE 11

Paragraph (1) (in general): See Rule 20 (Receipt of application) which provides, inter alia, that the applicant will be promptly notified of whether or not an international filing date was accorded to his application.

Paragraph (1)(i): As to nationality and residence, see Article 9(2); as to the competence of the Receiving Office, see Article 10(1) to (3).

Paragraph (1)(ii): As to the language, see Article 3(3)(i) and Rule 12 (Language of the application).

Paragraph (1)(iii): As to the purview of the Treaty, see Rule 3.4 (Subject of the international application; Purview of the Treaty).

Paragraph (1)(iv): International filing date will be accorded even if the elements enumerated in this provision do not comply with all the requirements of form and content provided for in Rules 5.2 (The petition) and 5.4 (Names and addresses), as long as the intent to ask for processing according to the Patent Cooperation Treaty is clear and the applicant is identifiable. The Receiving Office will not go into the question whether the description and the claims comply with the requirements of the Treaty and the Regulations. It will merely check whether the application contains passages which, on the face of it, appear to be a description and claims.

Paragraph (2): The said effect is acquired if the international filing date has been accorded under paragraph (1). This effect cannot be taken back but it can later cease.

It will cease in all designated States if the application is withdrawn by the applicant. It will cease in any designated State whose designation is withdrawn by the applicant. See Article 24(1)(i).

Furthermore, it will cease if the application must be considered withdrawn (see the next paragraph) or if the Searching Authority declares that no search report will be established (see the paragraph after the next); in either case, however, the applicant may turn for review to any designated Office and, if he is successful, his application will, as far as the State of that Office is concerned, be considered not to have ceased to be effective (see Article 25).

An international application will be considered withdrawn if the *International Bureau* finds that the record copy was received after the expiration of 13 months from the priority date (see Article 12(3)), or if the *Receiving Office* finds certain defects, namely: finds defects which should have prevented the according of an international filing date (see Article 14(5)); finds that the fees were not paid in time (see Article 14(4)); or finds that, notwithstanding an invitation to correct them, the following defects were not corrected (Article 14(1)(b)): lack of signature, defects in the indications concerning the applicant and the inventor, lack of title of the invention, lack of abstract, certain defects in the physical presentation, presence of excluded matter (Article 14(1)(a)).

The Searching Authority will declare that it will establish no search report when it finds that the application is "unsearchable" because it is outside the purview of the Treaty, or because the description, the claims or the drawings fail to comply with the prescribed requirements to such an extent that no meaningful search can be carried out (see Article 17(2)(a)).

Paragraph (3): Article 4A(2) of the Paris Convention provides that "Any filing that is equivalent to a regular national filing under . . . multilateral treaties concluded between Countries of the Union shall be recognized as giving rise to the right of priority." The Patent Cooperation Treaty would be a multilateral treaty covered by the quoted provision.

Thus the significance of paragraph (3) is that an international application could be the basis of a priority claim in: (i) any Paris Union country not party to the Patent Cooperation Treaty, and, (ii) any country party to that Treaty which the applicant did not designate.

ARTICLE 12

Transmittal of the International Application to the International Bureau and the Searching Authority

(1)(a) Subject to the provisions of paragraph (2), the Receiving Office shall transmit, as provided in the Regulations, the record copy of the international application to the International Bureau, and the search copy of the said application to the competent Searching Authority.

(b) The record copy shall be the authentic copy of the international application.

(2) If the applicant so requests, the Receiving Office shall give to the applicant the record copy, which then shall be forwarded by him to the International Bureau. The details of the procedure are specified by the Regulations.

(3) If the record copy has not been received by the International Bureau by the expiration of the 13th month from the priority date, the international application shall be considered withdrawn.

NOTES TO ARTICLE 12

Paragraph (1)(a): See Rules 21 (Preparation of copies) and 22 (Transmittal of the record copy and the search copy). "Record copy" is defined in Article 2(2)(k). See also Rules 23 (Receipt of record copy by International Bureau) and 24 (Receipt of search copy by the Searching Authority).

Paragraph (1)(b): ——.

Paragraph (2): See Rules 22.2 (Transmittal of the record copy through the applicant) and 22.3 (Loss or delay in mail to International Bureau). Loss or delay in the mail from the Receiving Office to the applicant is not provided for since the applicant has a right to collect the record copy from the Receiving Office. If he chose that the record copy be sent to him by mail, and if he does not receive it in time, he should collect it or solicit prompt mailing.

Paragraph (3): See Rule 23 (Receipt of record copy by International Bureau).

ARTICLE 13

Availability of Copy of the International Application to Designated Offices

(1) Any designated Office may ask the International Bureau to transmit to it a copy of the international application prior to the communication provided for in Article 20.

(2) Such copy shall be transmitted by the International Bureau as soon as possible after the expiration of one year from the priority date.

NOTES TO ARTICLE 13

Paragraph (1): Since the international application has the effect of a national application in the designated State (see Article 11(2)), it seems to be justified that a copy thereof be made available to the designated Office as soon as possible. Although the designated Office will be obliged to delay the processing of the application in question, it may need a copy for processing *other* applications. It is to be noted that this Article gives right to a copy, and *not* to a translation, of the international application.

Paragraph (2): See Rule 28 (Copies required under Article 13).

ARTICLE 14

Certain Defects in the International Application

(1)(a) The Receiving Office shall check whether the international application contains any of the following defects, that is to say:

(i) it is not signed, as provided in the Regulations;

(ii) it does not contain the prescribed indications concerning the applicant and the inventor;

(iii) it does not contain a title for the invention;

(iv) it does not contain an abstract;

(v) it obviously does not comply with the prescribed physical requirements;

(vi) it obviously contains matter excluded under the Regulations.

(b) If the Receiving Office finds any of the said defects, it shall invite the applicant to correct the international application within the prescribed time limit, failing which the application shall be considered withdrawn.

(2) If no Contracting State is designated in the international application, all Contracting States shall be considered designated.

(3) If the international application refers to drawings which, in fact, are not included in that application, the Receiving Office shall so indicate in the said application and shall notify the applicant accordingly. The reference to such drawings shall be considered non-existent.

(4) If the Receiving Office finds that the required fees are not paid within the prescribed time limits, the international application shall be considered withdrawn.

(5) If, after having accorded an international filing date to the international application, the Receiving Office finds that any of the requirements listed in items (i) to (iv) of Article 11(1) were not complied with at the time of receipt of that application, the said application shall be considered withdrawn.

NOTES TO ARTICLE 14

Article 14 (in general): Not all the defects in the international application are checked by the Receiving Office but only those referred to in paragraphs (1), (3), (4), and (5).

Not all the defects to be checked call for an invitation to be corrected but only those listed in paragraph (1)(a). The defect of not designating any Contracting State has as sole consequence that all Contracting States are considered designated (paragraph (2)). The defect of not including drawings referred to as included has the consequence of ignoring the reference (paragraph (3)). These two defects, it should be noted, do not have as a consequence that the application is considered withdrawn.

Paragraph (1)(a): The checking under this provision may commence before or after the transmittal of the record copy and the search copy under Article 12.

Paragraph (1)(a)(i): See Rules 5.14 (Signature) and Rules 2.3 (Signature and seal) and 2.1 (Applicant).

Paragraph (1)(a)(ii): See Rules 5.4 (Names and addresses), 5.5 (The applicant), 5.6 (The inventor).

Paragraph (1)(a)(iii): See Rule 5.3 (Title of the invention).

Paragraph (1)(a)(iv): See Rule 9 (Abstract).

Paragraph (1)(a)(v): See Rule 11 (Physical requirements of application).

Paragraph (1)(a)(vi): See Rule 6.2 (Matter excluded).

Paragraph (1)(b): See Rule 25 (Checking and correcting certain elements of the application). Certain defects may be noted by the Searching Authority or the International Bureau but all they can do is to call them to the attention of the Receiving Office which is sovereign in deciding whether to ask for correction and whether to accept the correction offered (see Rule 26 (Defects noted by the International Bureau or the Searching Authority)). As to the procedure where the correction is not made or not accepted, see Rule 27.1 (Procedure).

Paragraph (2): See the observations under the first two paragraphs of these Notes.

Paragraph (3): See the observations under the first two paragraphs of these Notes.

Paragraph (4): See Rule 27.1 (Procedure).

Paragraph (5): See Rule 27.1 (Procedure).

General Observations: As to errors in transcription, see Rule 83.1 (Obvious errors of transcription; Rectifications).

As to written communications, see Rules 84.1 (Correspondence; Need for letter and for signature), 84.2 (Correspondence; Languages), 84.3 (Correspondence; Mailings by Administrations).

ARTICLE 15

The International Search

(1) Each international application shall be the subject of international search by the competent Searching Authority referred to in Article 16.

(2) The objective of the international search is to discover relevant prior art.

(3) International search shall be made on the basis of the claims, with due regard to the description and the drawings (if any).

(4) The Searching Authority shall endeavor to discover as much of the relevant prior art as its facilities permit, and shall, in any case, consult the documentation specified in the Regulations.

NOTES TO ARTICLE 15

Paragraph (1): As to the question which Searching Authority is competent, see Article 16(2).

Paragraph (2): See Rule 31 (Relevant prior art for international search).

Paragraph (3): See Rule 31.3 (Orientation of search).

Paragraph (4): See Rule 32 (Minimum documentation).

ARTICLE 16

The Searching Authority

(1) International search shall be carried out by the Searching Authority.

(2) If there are several Searching Authorities, each Receiving Office shall, in accordance with the provisions of the applicable agreement referred to in paragraph (3)(b), specify the searching Authority or Authorities competent for the searching of international applications filed with such Office.

(3)(a) Searching Authorities shall be appointed by the Assembly.

(b) Appointment shall be conditional on the consent of the national or international administration to be appointed and the conclusion of an agreement, subject to approval by the Assembly, between such administration and the International Bureau. The agreement shall specify the rights and obligations of the parties, in particular, the formal undertaking by the said administration to apply and observe all the common rules of international search.

(c) The Regulations prescribe the minimum requirements, particularly as to manpower and documentation, which any national or international administration must satisfy before it can be appointed and must continue to satisfy while it remains appointed.

(d) Appointment shall be for a fixed period of time and may be extended for further periods.

(4)(a) Before the Assembly makes a decision on the appointment of any administration or the extension of its appointment, or before it allows any such appointment to lapse, a preparatory committee, as prescribed, shall be set up, which shall hear the interested administration and submit a report to the Assembly.

(b) When the said report is discussed in the Assembly, the Assembly shall hear the interested administration.

NOTES TO ARTICLE 16

Paragraph (1): As to the question whether there should be one Searching Authority or several Searching Authorities, see document PCT/III/4, paragraphs 25 to 28.

Paragraph (2): See Rule 33 (Competent Searching Authority).

Paragraph (3)(a): See paragraph (4) and Article 50(2)(a)(ii).

Paragraph (3)(b): See Article 50(2)(a)(ii).

Paragraph (3)(c): See Rule 34 (Minimum requirements for Searching Authorities).

Paragraph (3)(d): See paragraph (4).

Paragraph (4)(a): See Rule 35 (Preparatory Committee under Article 16(4)(a)).

Paragraph (4)(b): ——

ARTICLE 17

Procedure Before the Searching Authority

(1) Procedure before the Searching Authority shall be governed by the provisions of this Treaty, the Regulations, and the agreement which the International Bureau shall conclude, subject to this Treaty and the Regulations, with the said Authority.

(2) (a) If, in the opinion of the Searching Authority,

(i) the international application relates to a subject outside the purview of this Treaty as defined in the Regulations, or

(ii) the description, the claims, or the drawings, fail to comply with the prescribed requirements to such an extent that a meaningful search could not be carried out,

the said Authority shall so declare and shall notify the applicant and the International Bureau that no international search report will be established.

(b) If any of the situations referred to in subparagraph (a) is found to exist in connection with certain claims only, the international search report shall so indicate in respect of such claims, whereas, for the other claims, the said report shall be established as provided in Article 18.

(3)(a) If, in the opinion of the Searching Authority, the international application does not comply with the requirement of unity of invention as set forth in the Regulations, it shall invite the applicant, at his option:

(i) to restrict the claims, or

(ii) depending on the invitation of the Searching Authority, to pay additional fees, or divide the application, or both.

(b) If the applicant does not comply with the invitation within the prescribed time limit, the Searching Authority shall establish an international search report on what appears to be the main invention and shall mention the relevant facts in the said search report.

NOTES TO ARTICLE 17

Paragraph (1): See, in particular, paragraphs (2) and (3), and Article 18 (The international search report) and Rules 36 (Defects in certain elements of the application), 37 (Lack of unity of invention), 38 (Time limit for search), 39 (International search report), and 40 (Transmittal of search report).

Paragraph (2)(a): "Purview of the Treaty" is defined in Rule 3.4. As to the requirements for the description, claims, and drawings, see Articles 5, 6, 7, and the Rules cited thereunder. The consequence of a declaration that no international search report will be established is that the effect stated in Article 11(2) (the international application has the effect of a national application) ceases (see Article 24(1)), subject to the provisions of Article 25 (review by designated Offices).

Paragraph (2)(b): Article 18 deals with the search report.

Paragraph (3)(a): See Rule 37 (Lack of unity of invention (search)).

It may be considered whether the applicant should be allowed to pay additional search fees under protest, in which case the well-foundedness of the opinion would be subject to review by a higher organ of the Searching Authority itself. Such higher organ could order the reimbursement of all or part of the additional search fees.

Paragraph (3)(b): See Rule 37.6 (Main invention).

General Comment: The Regulations provide for the possibility of voluntary division (see Rule 37.7).

ARTICLE 18

The International Search Report

(1) The international search report shall be established within the prescribed time limit and in the prescribed form.

(2) It shall be transmitted by the Searching Authority to the applicant and the International Bureau.

(3) The search report shall be translated (as required) into the prescribed languages. The translations shall be prepared by or under the responsibility of the International Bureau.

NOTES TO ARTICLE 18

Paragraph (1): See Rules 38 (Time limit for search) and 39 (International search report).
Paragraph (2): See Rule 40 (Transmittal of search report).
Paragraph (3): See Rule 41 (Translation of search report).

ARTICLE 19

Amendment of the Claims Before the International Bureau

The applicant may, after having received the international search report, amend the claims of the international application by filing such amendments with the International Bureau within the prescribed time limit.

NOTES TO ARTICLE 19

See Rule 42 (Amendment of claims before International Bureau).

ARTICLE 20

Communication to Designated Offices

The International Bureau shall communicate the international application, including the original and any amended claims, together with the international search report and its translation (as required), to each designated Office.

NOTES TO ARTICLE 20

See Rule 43 (Communication to designated Offices).

ARTICLE 21

Publication of the International Application and the International Search Report

(1) The International Bureau shall publish international applications.

(2)(a) International publication of each international application shall be effected promptly after the expiration of 18 months from the priority date of that application if, among the designated States, there is at least one which provides for the publication of national applications promptly after the expiration of 18 months from the priority date or earlier.

(b) Otherwise, international publication of the international application shall be effected on the earlier of the following dates, that is to say:

(i) at the time fixed by the law of the designated State whose law provides for the earliest publication date for national applications after the expiration of 18 months from the priority date,
(ii) promptly after a national application or patent based on the said international application has been published in any of the designated States.

(3) The international search report shall be published together with the international application.

(4) The language and form of the publication and other details are governed by the Regulations.

(5) Neither the international application nor the international search report shall be published by the International Bureau if the application is withdrawn before the technical preparations for publication have been completed.

NOTES TO ARTICLE 21

Paragraphs (1) to (3): ——.
Paragraph (4): See Rule 44 (Publication of the international application and the search report).
Paragraph (5): See Rule 30 (Withdrawal of application or of designations).

ARTICLE 22

Copy, Translation, and Fee, to Designated Offices

[1] The domestic law of any Contracting State may require that, where that State is designated, the applicant furnish a copy of the international application (unless it has already been communicated under Article 20) and a translation thereof (as required), and pay the national fee (if any), to its national Office, within a fixed time limit; this time limit, however, must be fixed in such a way that it will not expire earlier than 20 months after the priority date.[1]

[1] The question should be considered whether the following provision should be added:
[1*bis*] Notwithstanding the provisions of paragraph [1], any Contracting State may provide in its domestic law that the applicant must transmit, for the sole purpose of publication by the national Office of such State, a translation (as required) to that national Office, by the expiration of the 18th month from the priority date. Article 23 shall not be affected by this provision.

NOTES TO ARTICLE 22

Paragraph [1]: See Rule 45 (Faculty under Article 22 in respect of copies, translations, fees). "Priority date" is defined in Article 2(2)(e).
Paragraph [1*bis*]: Some of the countries the domestic laws of which provide for the publication of applications promptly after the 18th month from the priority date may urge the adoption of this provision. Naturally, if such a country is a designated State, the application would be internationally published promptly after the 18th month, that is, within the same time limit which would be applicable for national publication. However, the international publication may be in a different language. If the faculty under paragraph [1*bis*] is not used, national publication in the national language could be effected only 2 months later (that is, after the 20th month). Use of the said faculty would shorten by two months the period which is guaranteed to the applicant under paragraph [1] as a period during which he is not required to furnish any translations.

ARTICLE 23

Delaying of National Procedure

(1) Subject to the provisions of paragraphs (2) and (3), a designated Office shall not process or examine the international application until it has received the communication provided for under Article 20, and in no case before the expiration of 20 months from the priority date.

(2) Where the communication provided for under Article 20 has not reached the designated Office within the time limit (if any applicable under Article 22[1], that Office may start processing and examining the international application any time after the expiration of that time limit.

(3) After receipt of the communication provided for under Article 20, any designated Office may, if the applicant expressly so requests, process and examine the international application.

NOTES TO ARTICLE 23

Paragraph (1): "Priority date" is defined in Article 2(2)(e).
Paragraph (2): As to the time limit under Article 22, see Rule 45.1(a) and (c).
Paragraph (3): The applicant would address such a request direct to the designated Office.

ARTICLE 24

Possible Loss of Effect in Designated States

(1) Subject to the provisions of Article 25, the effect of the international application provided for in Article 11(2) shall cease in the designated State if, and as of the date on which:

(i) the applicant withdraws his international application or the designation of that State;
(ii) the international application is to be considered withdrawn by virtue of Articles 12(3), 14(1)(b), 14(4), or 14(5);
(iii) the Searching Authority declares, under Article 17(2), that it will not establish an international search report.

(2) Where, by virtue of Article 17(3)(b), only the main invention has been searched, the effect provided for in Article 11(2) shall, subject to the provisions of Article 25, cease as far as the other inventions are concerned.

(3) Any Contracting State may provide in its domestic law that the effect provided for in Article 11(2) shall cease in that State if the applicant has not complied with any requirement provided for under Article 22.

NOTES TO ARTICLE 24

Paragraph (1): Article 25 deals with the review by the designated Office. Article 11(2) provides in effect that the international application has the effect of a national application in the designated State.
Paragraph (1)(i): See Rule 30 (Withdrawal of application or of designations).
Paragraph (1)(ii): Article 12(3) deals with the case where the record copy reaches the International Bureau after the expiration of the 13th month from the priority date. Article 14(1)(b) deals with the case where the applicant fails to correct certain defects. Article 14(4) deals with the case where the fees are not paid in time. Article 14(5) deals with the case where the Receiving Office finds defects which should have prevented it from according an international filing date.
Paragraph (1)(iii): Article 17(2) deals with the cases where the international application is "unsearchable."
Paragraph (2): Article 17(3)(b) deals with the case where the applicant does not comply with the Searching Authority's invitation in connection with lack of unity of invention. Article 25 deals with the review by the designated Office. Article 11(2) provides in effect that the international application has the effect of a national application in the designated State.
Paragraph (3): Article 22 allows, in effect, any designated State to require the furnishing of a copy and a translation of the application, and the payment of the national fee, by the expiration of the 20th month from the priority date or later. Article 11(2) provides in effect that the international application has the effect of a national application in the designated State. If paragraph [1*bis*] of Article 22 would be adopted, the reference to Article 22 would also mean a ceasing of the effect of the international application in case of non-compliance with the requirement of the said paragraph.

ARTICLE 25

Review By Designated Offices

(1) Where the effect provided for in Article 11(2) ceases under Article 24 other than by reason of withdrawal by the applicant of the international application or the designation, the International Bureau shall promptly send, at the request of the applicant, copies of the file to any of the designated Offices named by the applicant. The request shall be presented within the prescribed time limit.

(2) Each designated Office shall, provided that the national fee has been paid and the appropriate translation (as required) has been furnished within the prescribed time limit, decide whether the findings which caused the ceasing of the effect referred to in paragraph (1) were justified under the provisions of this Treaty and the Regulations, or, in the case of Article 12(3), whether it wishes to excuse the delay on account of *vis major*, and shall, as far as the State of that Office is concerned, proceed accordingly.

NOTES TO ARTICLE 25

Paragraph (1): See Rule 46.1 (Review by the designated Offices; Time limit for International Bureau).
Paragraph (2): See Rule 46.2 (Review by the designated Offices; Time limit for designated Offices).

ARTICLE 26

Rejection in Designated Offices

(1) Any designated Office may, according to its own procedure, reject the international application if it does not comply with the requirements of this Treaty and the Regulations.

(2) The effect of such rejection shall be limited to the territory of the State of the said Office.

NOTES TO ARTICLE 26

Paragraph (1): National procedure may start only after certain events defined in Article 23 (Delaying of national procedure) have occurred.
Paragraph (2): It may be considered that this provision is superfluous since it goes without saying.

ARTICLE 27

National Requirements

(1) No designated State shall require compliance with requirements relating to the form or content of the international application different from or additional to those which are provided for in this Treaty and the Regulations.

(2) It is understood that the provisions of paragraph (1) do not preclude any designated State from requiring the furnishing of documents not part of the international application but which constitute proof of allegations or statements made in that application.

NOTES TO ARTICLE 27

Paragraph (1): The requirements as to form and content are principally provided for in Articles 3 (The international application), 4 (The request), 5 (The description), 6 (The claims), 7 (The drawings), and 8 (Claiming priority), and the Rules pertaining to these Articles (mainly all or part of Rules 3 to 13, 17, and 29).
Paragraph (2): For example, the allegation that the applicant is the inventor (affidavit), or that he is a successor in title of the inventor (affidavit of applicant, or signed statement or assignment by inventor), or that the invention is usable or operational for certain purposes (laboratory notes and affidavits).
Naturally, any requirement as to the substantive law of patentability in the domestic law also remains fully applicable; for example, certain kinds of inventions, although within the purview of the Treaty, may be excluded from patentability under the domestic law, or, the criteria of novelty under the domestic law may be different from the criteria of relevant prior art in the Treaty (Rule 31), since the latter are established for the sole purpose of international search. The same is true in respect of international preliminary examination. See Article 33(5).

ARTICLE 28

Amendment of the Claims Before Designated Offices

The applicant shall be given the opportunity to amend the claims before each designated Office within the prescribed time limit.

NOTES TO ARTICLE 28

See Rule 47 (Amendment of the claims before the designated Offices; Time limit).
Naturally, the amendments made before the different Offices may differ from each other.

ARTICLE 29

Effects of the International Publication

(1) Subject to the provisions of paragraph (2), the effects, in a designated State, of the international publication of an international application shall be the same as those which the domestic law of the designated State provides for the earliest compulsory domestic publication of national applications as such.

(2) If the language in which the international publication has been effected is different from the language in which domestic publications are effected in the designated State, the domestic law of such State may provide that the effects provided for in paragraph (1) shall be applicable only from such time as:

(i) a translation into the latter language has been made available to the public, for example by publication, or
(ii) a translation into the latter language has effectively been transmitted to and received by the actual or prospective unauthorized user of the invention claimed in the international application, or
(iii) both the acts described in (i) and (ii) have taken place.

NOTES TO ARTICLE 29

Paragraph (1): The word "compulsory" is primarily intended to exclude the kind of publication which is effected, for example in the United States, on request of the applicant, as a "defensive publication," under the Rules of Practice of the US Patent Office since May 1, 1968.

Paragraph (2): It is believed that this provision covers the typical conditions known in the law of such countries which provide for the so-called "provisional protection."

ARTICLE 30

Confidential Nature of the International Application

(1)(a) Subject to the provisions of subparagraph (b), the International Bureau and the Searching Authorities shall not allow access by any person or authority to the international application before the international publication of that application, unless requested or authorized by the applicant.

(b) The provisions of subparagraph (a) shall not apply to transmittals provided for in Article 13 and communications under Article 20.

(2) No national Office shall allow access to the international application by third parties, unless requested or authorized by the applicant, before the earliest of the following dates:

(i) date of the international publication,
(ii) date of the receipt of a copy under Article 20,
(iii) date of the receipt of a copy under Article 22.

NOTES TO ARTICLE 30

Article 30 (in general): Paragraph (1) deals with the restrictions imposed on the International Bureau and the Searching Authorities, whereas paragraph (2) deals with the restrictions imposed on national Offices.

Paragraph (1)(a): International publication is the publication provided for under Article 21.

Paragraph (1)(b): Article 13 deals with the availability of copies of the international application to the designated Offices after the expiration of the priority year and receipt of the record copy by the International Bureau. Article 20 provides for the communication of the international application and the search report after the search report has issued and the time for amending the claims before the International Bureau has expired.

Paragraph (2): As to Article 20, see the observations in the preceding paragraph. Article 22 deals with the furnishing of a copy to the designated Office under the "20 months-rule."

General Observations: As to the keeping of records and files, see Rule 85.

As to the furnishing of copies of documents contained in the files, see Rule 86.

As to the availability of translations, see Rule 87.

CHAPTER II: INTERNATIONAL PRELIMINARY EXAMINATION

NOTES TO CHAPTER II

This Chapter, entitled "International Preliminary Examination," contains 12 Articles (Articles 31 to 42).

The Articles are arranged in a sequence which follows, more or less accurately, the chronology of the events in the procedure: Articles 31 to 38 deal with what could be called "the international phase," whereas Articles 39 to 42 deal with what could be called "the national phase."

The international phase consists of the presentation of the demand for international preliminary examination (Article 31), the Preliminary Examining Authority (Article 32), and the procedure before that Authority (Articles 33, 34, 35). Articles 36 to 38 deal with miscellaneous matters in the international phase.

The national phase concerns what happens in the elected State in connection with the international application accompanied by a preliminary examination report.

International preliminary examination is optional for the applicant: it will be carried out only if he so requests (see Article 31(1)). If he chooses to request preliminary examination, then, of course, the provisions of the international phase belong, chronologically, *after* the provisions on the international phase in Chapter I and *before* the provisions on the national phase in Chapter I.

The reason for which the Draft does not follow this chronological order is that Chapter II is optional also for the Contracting States. Any such State may avoid being bound by that Chapter if it makes the corresponding reservation (Article 60(1)). The separation of the provisions on preliminary examination serves the sole purpose that it permits easy identification of the provisions which would not bind any State making the reservation in question.

ARTICLE 31

Demand for International Preliminary Examination

(1) On the demand of the applicant, his international application shall be the subject of an international preliminary examination as provided in the following provisions and the Regulations.

(2) Only an applicant who is the resident or national, as defined in the Regulations, of a Contracting State bound by Chapter II may make a demand for international preliminary examination.

(3) The demand for international preliminary examination shall be made separately from the international application. The demand shall contain the prescribed particulars and shall be in the prescribed language and form.

(4) The demand shall indicate the States in which the applicant intends to use the results of the international preliminary examination ("elected States"). Additional States may be elected later. Election may relate only to States already designated under Article 4. Only Contracting States bound by Chapter II of this Treaty may be elected.

(5) The demand shall be subject to the payment of the prescribed fees within the prescribed time limit.

(6)(a) The demand shall be submitted to the competent Preliminary Examining Authority referred to in Article 32.

(b) Any later election shall be submitted to the International Bureau.

(7) Each elected Office shall be notified of its election.

NOTES TO ARTICLE 31

Paragraph (1): The term "demand" has been chosen to distinguish the petition for preliminary examination from the petition made under Chapter I and included in the "request" part of the "application."

The main applicable provisions of the Treaty are Articles 31 to 42, and the Rules issued thereunder (mainly Rules 48 to 73).

See Rule 48 as to the demand.

Paragraph (2): See Rule 49 (The applicant entitled to make a demand). Contracting States having made the reservation under Article 60(1) are not bound by Chapter II.

Paragraph (3): See Rules 48 (The demand), 50 (Languages), and 55.1 (Defects in the demand).

Paragraph (4): See Rule 48.7 (Election of States).

As to the designation of States under Chapter I, see Article 4(1)(ii) and (2), and the Rules thereunder (Rules 5.9 and 29).

For later elections, see Rule 51 (Later elections) and Rule 55.2 (Defects in the later election).

As to the election of non-designated States, see Rule 55.3(a) to (c) (Attempted elections).

Contracting States which have made the reservation under Article 60(1) are not bound by Chapter II. As to the election of a State not bound by Chapter II, see Rule 55.3(d) (Attempted elections).

Paragraph (5): See Rules 52 (Handling fee), 53 (Preliminary examination fee), and 55.1 (Defects in the demand).

Paragraph (6)(a): See Rule 54 (Competence of Preliminary Examining Authority).

Paragraph (6)(b): See Rules 51 (Later elections) and 55.2 (Defects in the later election).

Paragraph (7): See Rule 56 (Notification of demand and elections).

ARTICLE 32

The Preliminary Examining Authority

(1) International preliminary examination shall be carried out by the Preliminary Examining Authority.

(2) The provisions of Article 16(2) to (4) shall apply, *mutatis mutandis*, in respect of Preliminary Examining Authorities.

NOTES TO ARTICLE 32

Paragraph (1): As to the question of which authorities might become International Preliminary Examining Authorities, see document PCT/III/4, paragraphs 25 and 26.

Paragraph (2): Article 16(2) deals with the case of several Searching Authorities, and Article 16(4) with the case of decisions in the Assembly concerning Searching Authorities. See Rule 58 (Minimum requirements for Preliminary Examining Authorities).

ARTICLE 33

The International Preliminary Examination

(1) The objective of the international preliminary examination is to formulate a preliminary and non-binding opinion on the questions whether the claimed invention appears to be novel, to involve an inventive step (to be non-obvious), and to be industrially applicable.

(2) For the purposes of the international preliminary examination, a claimed invention shall be considered novel if it is not anticipated by the prior art as defined in the Regulations.

(3) For the purposes of the international preliminary examination, a claimed invention shall be considered to involve an inventive step if, having regard to the prior art as defined in the Regulations, it is not obvious to a person skilled in the art.

(4) For the purposes of the international preliminary examination, a claimed invention shall be considered industrially applicable if, according to its nature, it can be made or used (in the technological sense) in any kind of industry. "Industry" shall be understood in its broadest sense and shall include agriculture.

(5) It is understood that the criteria described above merely serve the purposes of international preliminary examination and that any Contracting State may adopt additional or different criteria for the purposes of deciding whether, in that State, the claimed invention is patentable or not.

(6) The international preliminary examination shall take into consideration all the documents cited in the international search report. It may take into consideration any additional documents considered to be relevant in the particular case.

NOTES TO ARTICLE 33

Paragraph (1): The three criteria are defined in the following paragraphs: novelty, in paragraph (2); inventive step (non-obviousness), in paragraph (3); industrial applicability, in paragraph (4).

Paragraph (2): See Rule 59 (Prior art for preliminary examination).

Paragraph (3): See Rules 59 (Prior art for preliminary examination) and 60 (Inventive step or non-obviousness).

Paragraph (4): ——.

Paragraph (5): This provision appears to state something which goes without saying.

Paragraph (6): As to the documents cited in the international search report, see Rule 39.5(a): "The search report shall contain the citations of the documents considered to be relevant."

ARTICLE 34

Procedure Before the Preliminary Examining Authority

(1) Procedure before the Preliminary Examining Authority shall be governed by the provision of this Treaty, the Regulations, and the agreement which the International Bureau shall conclude, subject to this Treaty and the Regulations, with the said Authority.

(2)(a) The applicant shall have a right to communicate orally and in writing with the Preliminary Examining Authority.

(b) He shall receive at least one written opinion from the said Authority unless, in the opinion of the Preliminary Examining Authority, the invention satisfies the criteria set forth in Article 33(1) and the application complies with the requirements of this Treaty and the Regulations in so far as checked by that Authority.

(c) The applicant may respond to the written opinion. In particular, if any written opinion calls for amendment of the claims, the applicant shall be given an opportunity to amend the claims within the prescribed time limit before the preliminary examination report is issued.

(3) If, in the opinion of the Preliminary Examining Authority, the international application does not comply with the requirement of unity of invention as set forth in the Regulations, the said Authority may invite the applicant, at the latter's option, either to restrict the claims or to divide the application so as to comply with the requirement.

(4)(a) If, in the opinion of the Preliminary Examining Authority,

(i) the subject of the international application is outside the purview of this Treaty as specified by the Regulations, or
(ii) the description, the claims, or the drawings, are so unclear, or the claims are so inadequately supported by the description, that no meaningful opinion can be formed on the novelty, inventive step (non-obviousness), or industrial applicability, of the claimed invention,

the said Authority shall not go into the questions referred to in Article 33(1) and shall inform the applicant of this opinion and its reasons.

(b) If any of the situations referred to in subparagraph (a) is found to exist in, or in connection with, certain claims only, the provisions of that subparagraph shall apply only to the said claims.

NOTES TO ARTICLE 34

Paragraph (1): The main relevant provisions of the Treaty and the Regulations are contained in Articles 34, 35, and 36, and Rules 61 to 69, respectively.

Paragraph (2)(a): See Rule 61 (Procedure before the Preliminary Examining Authority).

Paragraph (2)(b): See Rule 61.2 (Written opinion of the Preliminary Examining Authority).

The criteria set forth in Article 33(1) are novelty, inventive step (non-obviousness), and industrial applicability.

The requirements referred to and which the Preliminary Examining Authority may notice if not complied with are any of the following: the subject of the application is outside the purview of the Treaty (see Article 34(4)(a)(i)); the description, the claims, or the drawings, are "unexaminable" (see Article 34(4)(a)(ii)); the request has some defect (see Rule 61.2(a)(ii)); some part of the application does

not comply with any physical requirement (see Rule 61.2(a)(ii)).

Paragraph (2)(c): See Rules 61.3 (Formal response to the Preliminary Examining Authority) and 61.4 (Amendments).

Paragraph (3): See Rule 62 (Lack of unity of invention (preliminary examination)).

Paragraph (4)(a): As to the purview of the Treaty, see Rule 63 (Purview of the Treaty) which refers to Rules 3.1 (Subject admitted), 3.2 (Subject excluded), and 3.3 (Form of protection).

The questions referred to in Article 33(1) are the questions of novelty, inventive step (non-obviousness), and industrial applicability.

Paragraph (4)(b): The two situations referred to are: (i) being outside the purview of the Treaty, and, (ii) "unexaminability."

ARTICLE 35

The International Preliminary Examination Report

(1) The international preliminary examination report shall be established within the prescribed time limit and in the prescribed form.

(2) The international preliminary examination report shall not contain any statement on the question whether the claimed invention is or seems to be patentable or unpatentable according to the law of any country. It shall state, subject to the provisions of paragraphs (3) and (4), in relation to each claim, whether the claim appears to satisfy the criteria of novelty, inventive step (non-obviosuness), and industrial applicability, as defined for the purposes of the international preliminary examination in Article 33(1) to (4). The statement shall be accompanied by the citation of the documents believed to support the stated conclusion and such very brief explanations as the circumstances of the case may require and the Regulations allow; it may also be accompanied by observations on the clarity of the claims and on the question whether they are fully supported by the description.

(3) If the applicant does not comply with the invitation referred to in Article 34(3) within the prescribed time limit, the international preliminary examination report shall state this fact. It shall not contain any statement as described in paragraph (2).

(4)(a) If, at the time of establishing the international preliminary examination report, in the opinion of the Preliminary Examining Authority, any of the situations referred to in Article 34(4)(a) exists, that report shall state this opinion and the reasons therefor. It shall not contain any statement as described in paragraph (2).

(b) If a situation under Article 34(4)(b) is found to exist, the international preliminary examination report shall, in relation to the claims in question, contain the statement as provided in subparagraph (a), whereas, in relation to the other claims, it shall contain the statement as provided in paragraph (2).

NOTES TO ARTICLE 35

Paragraph (1): See Rules 64 (Time limit for preliminary examination) and 65 (The preliminary examination report).

Paragraph (2): See Rule 65 (The preliminary examination report), particularly Rules 65.6, 65.7, 65.8.

Paragraph (3): That is, if the applicant does not comply with the invitation to restrict the claims or to divide the application so as to comply with the requirement of unity of invention (Article 34(3)), the report will not go into the questions of novelty, inventive step (non-obviousness), and industrial applicability (cf. Article 35(2)).

Paragraph (4)(a): That is, if the application is outside the purview of the Treaty or is "unexaminable" (Article 34(4)(a)), the report will not go into the questions of novelty, inventive step (non-obviousness), and industrial applicability (cf. Article 35(2)).

Paragraph (4)(b): That is, if the application is outside the purview of the Treaty or is "unexaminable" only in, or in connection with, some (less than all) of the claims, the report will, for such claims, merely consist of a statement that it was not possible to go into the examination of the three criteria in question, whereas for the *other* claims, the report will go into the examination of the said criteria.

ARTICLE 36

Transmittal, Translation, and Communication of the International Preliminary Examination Report

(1) The international preliminary examination report, together with the prescribed annexes, shall be transmitted to the applicant and to the International Bureau.

(2)(a) The international preliminary examination report and its annexes shall be translated (as required) into the prescribed languages.

(b) Any translation of the said report shall be prepared by or under the responsibility of the International Bureau, whereas any translation of the said annexes shall be prepared by the applicant.

(3)(a) The international preliminary examination report, together with its translation (as required), and its annexes (in the original language), shall be communicated by the International Bureau to each elected Office.

(b) The required translation of the annexes shall be transmitted within the prescribed time limit by the applicant to the elected Offices.

NOTES TO ARTICLE 36

Paragraph (1): See Rule 66 (Transmittal of the preliminary examination report).

Paragraph (2)(a): See Rule 67 (Translation of the preliminary examination report). As to the annexes, see Rule 65.15 (Annexes to the report). The annexes will consist of replacement sheets, that is, sheets replacing such sheets in the original application which have undergone some modification for any of the following reasons: amendment of the claims, amendment of the description, corrections in any part of the application, compliance with physical requirements. Furthermore, the annexes will include, where the description was amended, a statement by the Preliminary Examining Authority specifying whether or not the amendment contains new matter.

Paragraph (2)(b): As to the annexes, see Rule 65.15 (Annexes to the report).

Paragraph (3)(a): See Rule 68 (Communication of preliminary examination report). As to translation, see Rule 67 (Translation of the report). As to annexes, see Rule 65.15 (Annexes to the report).

Paragraph (3)(b): The time limit is defined in Rule 69.1 (Translation of annexes of preliminary examination report; Time limit).

ARTICLE 37

Withdrawal of Demand or Election

(1) The applicant may withdraw any or all elections.

(2) If the elections of all elected States are withdrawn, the demand shall be considered withdrawn.

(3)(a) Any withdrawal shall be notified to the International Bureau.

(b) The administrations concerned shall be notified accordingly by the International Bureau.

(4)(a) Subject to the provisions of subparagraph (b), any elected State may consider the withdrawal of the demand or of its election to be withdrawal of the international application as far as that State is concerned.

(b) The withdrawal of the demand or of the election shall not be considered to be withdrawal of the international application if the withdrawal is effected prior to the expiration of the time limit provided under Article 22; however, any Contracting State may provide in its domestic law that the aforesaid shall apply only if its national Office has received, within the said time limit, a copy of the international application, together with a translation (as required), and the national fee.

NOTES TO ARTICLE 37

Paragraphs (1) to (3)(a): ——.

Paragraph (3)(b): See Rule 70 (Withdrawal of demand or elections).

Paragraph (4)(a): ——.

Paragraph (4)(b): Article 22 is the provision under which a designated State may require the furnishing of a copy and a translation of the international application and the payment of the national fee by the end of the 20th month from the priority date or later. Article 37(4) means that if the election is withdrawn inside the time limit applicable under Article 22, then the application itself is not considered withdrawn since the withdrawal of election would occur inside the period during which the national Office would not process the application. Thus it is in no different position than if the election had never been made.

ARTICLE 38

Confidential Nature of the International Preliminary Examination

(1) Neither the International Bureau nor the Preliminary Examining Authority shall, unless requested or authorized by the applicant, allow access to the file of the international preliminary examination by any person or authority at any time, except by the elected Offices once the international preliminary examination report has been established.

(2) Subject to the provisions of paragraph (1) and Articles 36(3) and 37(3)(b), neither the International Bureau nor the Preliminary Examining Authority shall give information on the issuance or non-issuance of an international preliminary examination report and on the withdrawal or non-withdrawal of the demand or of any election.

NOTES TO ARTICLE 38

Paragraph (1): See note in next paragraph.

Paragraph (2): The combined effect of the two paragraphs is that information concerning preliminary examination will be given *only to an elected office* and that such information will consist of the following and will occur at the following moments:

—the fact of election will be notified (Article 31(7)),

—the fact of withdrawal will be notified (Article 37(3)(b)) and if there is withdrawal of election of a given State such State will not be given any further information even if (later) the preliminary examination report issues (since such report is communicated only to the elected Offices; see Article 38(1)),

—the preliminary examination report will be communicated (Article 36(3)(a)),

—the file will be accessible to the elected Office but only *after* the preliminary examination report is established, that is, after the dialogue between the applicant and the Preliminary Examining Authority has been concluded (Article 38(1)).

It is to be noted that neither the Preliminary Examining Authority nor the International Bureau will give any information to anyone other than the elected Offices at any time and that no information will be published either.

ARTICLE 39

Copy, Translation, and Fee to Elected Offices

The provisions of Article 22 shall apply where the Contracting State has been elected and the national examination and other processing are delayed under Article 40, with this difference that the time limit referred to in Article 22[1] must be fixed in such a way that it will not expire earlier than 25 months from the priority date.

NOTES TO ARTICLE 39

See Rule 71 (Faculty under Article 39 in respect of copies, translations, fees).

Article 22 provides, in essence, that a copy and a translation of the application may be required to be furnished, and the fee may be required to be paid, to a national Office by the expiration of the 20th month from the priority date. The present Article (39) extends this minimum waiting period by five further months because the preliminary examination report will normally not be available earlier. However, the present Article would not affect Article 22 [1*bis*]—should that provision be accepted—which permits the requirement for a translation to be furnished by the end of the 18th month from the priority date.

Article 40 deals with the delaying of national proceedings. It is referred to here since the "25-month rule" would not apply where the election is made after the 19th month from the priority date (Article 40(1)) or if the applicant requests early processing (Article 40(3)) since, in those cases, there is no delaying of the national processing, and thus the copy, translation, and national fee may be needed earlier than by the end of the 25th month.

"Priority date" is defined in Article 2(2)(e).

ARTICLE 40

Delaying of National Examination and Other Processing

(1) If the election of any Contracting State has been effected prior to the expiration of the 19th month from the priority date, the national Office of that State shall not proceed, subject to the provisions of paragraphs (2) and (3), to the examination and other processing of the international application until the communication of the international preliminary examination report to such Office, and in no case before the expiration of the 25th month from the priority date.

(2) Any Contracting State may provide in its domestic law that its national Office may proceed to the examination and other processing of the international application after the expiration of the 25th month from the priority date.

(3) After receipt of the international preliminary examination report, any elected Office may, if the applicant expressly so requests, proceed to the examination and other processing of the international application.

NOTES TO ARTICLE 40

Paragraph (1): "Priority date" is defined in Article 2(2)(e).

Paragraph (2): See Rule 72 (Faculty under Article 40(2) in respect of delaying of national processing). "Priority date" is defined in Article 2(2)(e).

Paragraph (3): The applicant would address such a request direct to the elected Office.

ARTICLE 41

Amendment of the Claims Before Elected Offices

The applicant shall be given the opportunity to amend the claims before each elected Office within the prescribed time limit.

NOTES TO ARTICLE 41

See Rule 73 (Amendment of claims before the elected Office).

Naturally, the amendments made before the different Offices may differ from each other.

ARTICLE 42

National Examination Results

No elected Office receiving the international preliminary examination report may require that the applicant furnish copies, or information on the contents, of any papers connected with the examination relating to the same international application in any other elected national Office.

NOTES TO ARTICLE 42

This provision is intended to lessen the burden of the applicant.

CHAPTER III: COMMON PROVISIONS

NOTES TO CHAPTER III

This Chapter, entitled "Common Provisions," contains 7 Articles (Articles 43 to 49).

They consist of provisions which concern both Chapters I and II.

ARTICLE 43

Inventors' Certificates

Subject to the provisions of Article 4(3), references in this Treaty to patents shall be construed as including references to inventors' certificates.

NOTES TO ARTICLE 43

Article 4(3) provides that unless the applicant asks for another kind of protection under Article 45, designation shall mean that he wishes to obtain a patent.

ARTICLE 44

Regional Patents and Regional Patent Treaties

(1) References in this Treaty to national applications or national patents shall be construed as including references to applications for patents, and to patents granted, with effect in more than one State.

(2) References in this Treaty to national laws shall be construed as including references to international treaties providing for the grant of patents with effect in more than one State.

NOTES TO ARTICLE 44

Paragraph (1): The European patent, if and when it will exist, would come under this provision.

Paragraph (2): The Convention on the European Patent would be an international Treaty contemplated under this provision.

ARTICLE 45

Seeking Protection Through Other Means Than the Grant of a Patent

In respect of any designated or elected State whose law provides for the grant of inventors' certificates, utility certificates, utility models, or patents of addition, the applicant may indicate, at the time of the designation, that his international application relates, as far as that State is concerned, to an inventor's certificate, a utility certificate, or a utility model, rather than a patent, or that it relates to a patent of addition, and the ensuing effect shall be governed by the applicant's choice.

NOTES TO ARTICLE 45

See Rules 5.12 (The request (contents); Choice of certain kinds of protection) and 29.4 (Later designations; Choice of certain kinds of protection).

Naturally, if the domestic law of the designated or elected State so permits, the applicant may substitute the request for one kind of protection by a request for another kind of protection presented directly to the designated or elected Office within the time limit and subject to the conditions specified in that law.

ARTICLE 46

Incorrect Translation of the International Application

(1) If, because of an unintentionally incorrect translation of the international application, the scope of any national patent granted exceeds the scope of the international application in its original language, the competent authorities of the Contracting State concerned may accordingly and retroactively limit the scope of the national patent and declare such national patent null and void to the extent that its scope has exceeded the scope of the international application.

(2) If the discrepancy in the translation was intentional on the part of the applicant or the person acting under his authority, the national patent may be declared retroactively null and void.

NOTES TO ARTICLE 46

Paragraph (1): ——.
Paragraph (2): ——.

ARTICLE 47

Time Limits

(1) The details for computing time limits referred to in this Treaty are governed by the Regulations.

(2)(a) All time limits fixed in Chapters I and II of this Treaty may be modified by unanimous decision of the Contracting States.

(b) Such decision shall be made in the Assembly or through consultation by correspondence.

(c) The details of the procedure are governed by the Regulations.

NOTES TO ARTICLE 47

Paragraph (1): See Rule 74 (Computation of time limits).

Paragraph (2)(a): The following provisions of the Treaty fix time limits (all time limits are counted from the priority date):

Article 4(2) (designation not later than one year);

Article 12(3) (transmittal of record copy not later than 13 months);

Article 13(2) (copy of application available to designated Office as soon as possible after one year);

Article 21(2) (international publication not sooner than 18 months);

Article 22[1] (copy, translation, and fee to designated Office not sooner than 20 months);

[Article 22[1*bis*] (Translation to designated Office for national publication not sooner than 18 months);]

Article 23 (delaying of national procedure in designated Office for not less than 20 months);

Article 39 (copy, translation, and fee to elected Office not sooner than 25 months);

Article 40(1) (two time limits: delaying of national procedure in elected Office for not less than 25 months, if election effected not later than 19 months).

Paragraph (2)(b): See Article 50(2)(a)(ii) and Rule 75 (Modification of time limits in Treaty).

Paragraph (2)(c): See Rule 75 (Modification of time limits in Treaty).

ARTICLE 48

Delay in Meeting Certain Time Limits

(1) Where any time limit fixed in this Treaty or the Regulations is not met because of interruption in the mail service or unavoidable loss or delay in the mail, the time limit shall be deemed to be met in the cases and subject to the proof and other conditions prescribed in the Regulations.

(2) Any Contracting State shall, as far as that State is concerned, excuse, for reasons admitted under its domestic law, any delay in meeting any time limit.

NOTES TO ARTICLE 48

Paragraph (1): See Rule 76 (Delay or loss in mail).

Paragraph (2): It may be considered that this provision is superfluous since it goes without saying.

ARTICLE 49

Right to Practice Before International Authorities

Any attorney, patent agent, or other person having the right to practice before the national Office or international administration with which the international application was filed shall be entitled to practice before the International Bureau and the competent Searching Authority and competent Preliminary Examining Authority in respect of that application.

NOTES TO ARTICLE 49

See Rule 77 (Right to practice before International Authorities).

CHAPTER IV: ADMINISTRATIVE PROVISIONS

NOTES TO CHAPTER IV

This Chapter, entitled "Administrative Provisions" consists of 7 Articles (Articles 50 to 56).

The first three deal with three organs: the Assembly (Article 50), the International Bureau (Article 51), and the Advisory Committee on International Searching and International Preliminary Examination (Article 52). The Article on the Assembly provides also for the later creation of a fourth organ, the Executive Committee (Article 50(8)).

Article 53 deals with finances, and Article 54 with the Regulations.

Articles 55 and 56 deal with modifications to the Treaty.

Most of the provisions of this Chapter follow closely the adminstrative provisions of the Paris Convention as revised at Stockholm in 1967.

ARTICLE 50

Assembly

(1)(a) The Assembly shall consist of the States members of the Union.

(b) The Government of each State shall be represented by one delegate, who may be assisted by alternate delegates, advisors, and experts.

(2)(a) The Assembly shall:

(i) deal with all matters concerning the maintenance and development of the Union and the implementation of this Treaty;

(ii) perform such tasks as are specifically assigned to it under other provisions of this Treaty;

(iii) give directions to the International Bureau concerning the preparation for revision conferences;

(iv) review and approve the reports and activities of the Director General concerning the Union, and give him all necessary instructions concerning matters within the competence of the Union;

(v) determine the program and adopt the budget of the Union, and approve its final accounts;

(vi) adopt the financial regulations of the Union;

(vii) establish such committees and working groups as it deems appropriate to achieve the objectives of the Union;

(viii) establish the preparatory committee referred to in Article 16(4)(a);

(ix) determine which States not members of the Union and which intergovernmental and international non-governmental organizations shall be admitted to its meetings as observers;

(x) adopt its own rules of procedure;

(xi) adopt amendments to the Regulations;

(xii) take any other appropriate action designed to further the objectives of the Union and perform such other functions as are appropriate under this Treaty.

(b) With respect to matters which are of interest also to other Unions administered by the Organization, the Assembly shall make its decisions after having heard the advice of the Coordination Committee of the Organization.

(3) A delegate may represent one State only.

(4) Each State member of the Assembly shall have one vote. However, on matters of exclusive interest to States bound by Chapter II, States not bound thereby shall not vote.

(5)(a) One-half of the States members of the Assembly shall constitute a quorum.

(b) In the absence of the said quorum, the Assembly shall make decisions subject to the condition that, with the exception of decisions concerning its own procedure, the quorum and the required majority shall be attained through consultation by correspondence as provided for in the Regulations.

(6)(a) Subject to the provisions of Articles 9(3)(a), 47(2), and 54(2), the decisions of the Assembly shall require two-thirds of the votes cast.

(b) Abstentions shall not be considered as votes.

(7) A delegate may vote in the name of one State only.

(8) When the number of States members of the Union exceeds forty, the Assembly shall set up an Executive Committee to which it may delegate, for the intervals between the sessions of the Assembly, any or all of the functions referred to in paragraph (2)(a)(iv), (v), (vii), and (xii).

(9)(a) Until the Executive Committee is established, the Assembly shall meet once in every calendar year in ordinary session upon convocation by the Director General and, in the absence of exceptional circumstances, during the same period and at the same place as the Coordination Committee of the Organization.

(b) Once the Executive Committee is established, the Assembly shall meet once only in every third calendar year in ordinary session upon convocation by the Director General and, in the absence of exceptional circumstances, during the same period and at the same place as the General Assembly of the Organization, while the Executive Committee shall meet once in every calendar year in ordinary session upon convocation by the Director General and, in the absence of exceptional circumstances, during the same period and at the same place as the Coordination Committee of the Organization.

(c) The Assembly shall meet in extraordinary session upon convocation by the Director General, at the request of the Executive Committee (once established) or at the request of one-fourth of the States members of the Assembly.

(d) The Executive Committee (once established) shall meet in extraordinary session upon convocation by the Director General, either on his own initiative, or at the request of the Chairman of the Executive Committee or of one-fourth of its members.

NOTES TO ARTICLE 50

Paragraph (1)(a): ——.
Paragraph (1)(b): ——.
Paragraph (2)(a)(i): ——.

Paragraph (2)(a)(ii): These tasks, apart from the tasks enumerated in paragraph 50(2)(a), are the following: allow residents or nationals of non-PCT countries to file (Article 9(3)); appoint Searching Authorities (Article 16(3)(a)); approve agreements between the International Bureau and the Searching Authority (Article 16(3)(b)), hear the report of the preparatory Committee and the (prospective) Searching Authority (Article 16(4)(a) and (b)); perform same tasks with respect to (prospective) Preliminary Examining Authorities (Article 32(2)); modify the time limits fixed in the Treaty (Article 47); set up the Executive Committee (Article 50(8)); create new publications by International Bureau (Article 51(5)); direct the preparation of revision conferences (Article 51(8)(a)); establish and direct the Advisory Committee under Article 52 (Article 52(1), (2)(a), (4)); make certain financial decisions (Article 53(5)(b), (c), (d), (e), (7)(a), (b), (c), (9)); exercise control over the Administrative Instructions (Article 54(3)); convene revision conferences (Article 55(2)); amend certain administrative provisions of the Treaty (Article 56(1), (2), (3)); adopt measures for the gradual application of the Treaty (Article 61); designate additional languages for official texts of the Treaty (Article 63(1)(b)).

Paragraph (2)(a)(iii): See Article 55 (Revision of the Treaty).

Paragraph (2)(a)(iv) to (vii): ——.

Paragraph (2)(a)(viii): The preparatory Committee referred to in Article 16(4)(a) is the committee which deals with the appointment, etc., of Searching Authorities and Preliminary Examining Authorities.

Paragraph (2)(a)(ix) and (x): ——.
Paragraph (2)(a)(xi): See Article 54 (Regulations).
Paragraph (2)(a)(xii): ——.
Paragraph (2)(b): ——.
Paragraph (3): ——.

Paragraph (4): Chapter II deals with international preliminary examination.

Paragraph (5)(a): ——.

Paragraph (5)(b): See Rule 78.1 (Lack of quorum in the Assembly; Consultation by correspondence).

Paragraph (6)(a): The provisions referred to call for unanimity: Article 9(3)(a) provides that the Assembly may allow residents or nationals of specified States other than Contracting States to file international applications; under Article 47(2)(a) and (b), the Assembly may change the time limits fixed in the Treaty (see notes to Article 47(2)(a)); according to Article 54, the Regulations specify the Rules which may be amended only by unanimous consent (see Rule 80).

Paragraph (6)(b): ——.
Paragraph (7): ——.
Paragraph (8): ——.
Paragraph (9): ——.

ARTICLE 51

International Bureau

(1) Administrative tasks concerning the Union shall be performed by the International Bureau.

(2) The International Bureau shall provide the secretariat of the various organs of the Union.

(3) The Director General shall be the chief executive of the Union and shall represent the Union.

(4) The draft program and budget of the Union, and the draft agenda of the Assembly, shall be prepared by the Director General.

(5) The International Bureau shall publish a Gazette and other publications provided for by the Assembly or under the Regulations.

(6) The Regulations shall specify the services that national Offices shall perform in order to assist the International Bureau and the Searching and Preliminary Examining Authorities in carrying out their tasks under this Treaty.

(7) The Director General and any staff member designated by him shall participate, without the right to vote, in all meetings of the Assembly, and any committee or working group established under this Treaty or the Regulations. The Director General, or a staff member designated by him, shall be ex officio secretary of these bodies.

(8)(a) The International Bureau shall, in accordance with the directions of the Assembly, make the preparations for the revision conferences.

(b) The International Bureau may consult with intergovernmental and international non-governmental organizations concerning preparations for revision conferences.

(c) The Director General and persons designated by him shall take part, without the right to vote, in the discussions at revision conferences.

(9) The International Bureau shall carry out any other tasks assigned to it.

NOTES TO ARTICLE 51

Paragraphs (1) to (4) : ——.
Paragraph (5) : See Rule 79 (Gazette).
Paragraph (6) : Such services would probably include the furnishing of copies of patents and patent applications published by each national Office and classifying them, at least subsidiarily, according to the International Patent Classification.
Paragraph (7) : ——.
Paragraph (8)(a) : As to the conferences of revision, see Article 55.
Paragraph (8)(b) and (c) : ——.
Paragraph (9) : ——.

ARTICLE 52

Advisory Committee on International Searching and International Preliminary Examination

(1) The Assembly shall establish an Advisory Committee on International Searching and International Preliminary Examination.

(2)(a) The Assembly shall determine the composition of the Advisory Committee and appoint its members.

(b) The Director General shall invite representatives of interested non-governmental organizations to participate in discussions of interest to them.

(3) The functions of the Advisory Committee shall be purely advisory, namely, to assist, by advice, the Assembly and the Executive Committee (once established), all national and international administrations responsible for the implementation of this Treaty, and the applicants:

(i) in deriving the maximum practical benefit from this Treaty,

(ii) in securing, where there are several Searching Authorities and several Preliminary Examining Authorities, the maximum degree of uniformity in their documentation and working methods and the maximum degree of uniformly high quality in their reports.

(4) The details of the composition and the procedure of the Advisory Committee shall be governed by the Regulations and the decisions of the Assembly.

NOTES TO ARTICLE 52

Paragraphs (1) to 4) : ——.

ARTICLE 53

Finances

(1)(a) The Union shall have a budget.

(b) The budget of the Union shall include the income and expenses proper to the Union and its contribution to the budget of expenses common to the Unions administered by the Organization.

(c) Expenses not attributable exclusively to the Union but also to one or more other Unions administered by the Organization shall be considered as expenses common to the Unions. The share of the Union in such common expenses shall be in proportion to the interest the Union has in them.

(2) The budget of the Union shall be established with due regard to the requirements of coordination with the budgets of the other Unions administered by the Organization.

(3) Subject to the provisions of paragraph (5), the budget of the Union shall be financed from the following sources:

(i) fees and charges due for services rendered by the International Bureau in relation to the Union;

(ii) sale of, or royalties on, the publications of the International Bureau concerning the Union;

(iii) gifts, bequests, and subventions;

(iv) rents, interests, and other miscellaneous income.

(4) The amounts of fees and charges due to the International Bureau and the prices of its publications shall be so fixed that they should, under normal circumstances, be sufficient to cover all the expenses of the International Bureau connected with the administration of this Treaty.

(5)(a) Should any financial year close with a deficit, the member States shall, subject to the provisions of subparagraphs (b) and (c), pay contributions to cover such deficit.

(b) The amount of the contribution of each State shall be decided by the Assembly with due regard to the number of international applications which has emanated from each of them in the relevant year and other pertinent factors.

(c) The Assembly may decide that any deficit or any part thereof be carried forward if other means of provisionally covering such deficit are secured.

(d) If the financial situation of the Union so permits, the Assembly may decide that any contributions paid under subparagraph (a) be reimbursed to the States which have paid them.

(e) A State which has not paid, within two years of the due date as established by the Assembly, its contribution under subparagraph (b) may not exercise its right to vote in any of the organs of the Union of which it is a member. However, any organ of the Union may allow such a State to continue to exercise its right to vote in that organ if, and as long as, it is satisfied that the delay in payment is due to exceptional and unavoidable circumstances.

(6) If the budget is not adopted before the beginning of a new financial period, it shall be at the same level as the budget of the previous year, as provided in the financial regulations.

(7)(a) The Union shall have a working capital fund which shall be constituted by a single payment made by each State member of the Union. If the fund becomes insufficient, the Assembly shall decide to increase it. If part of the fund is no longer needed, it shall be reimbursed.

(b) The amount of the initial payment of each State to the said fund or of its participation in the increase thereof shall be decided by the Assembly.

(c) The terms of payment shall be fixed by the Assembly on the proposal of the Director General and after it has heard the advice of the Coordination Committee of the Organization.

(d) Any reimbursement shall be proportionate to the amounts paid by each State, taking into account the dates at which they were paid.

(8)(a) In the headquarters agreement concluded with the State on the territory of which the Organization has its headquarters, it shall be provided that, whenever the working capital fund is insufficient, such State shall grant advances. The amount of these advances and the conditions on which they are granted shall be the subject of separate agreements, in each case, between such State and the Organization. As long as it remains under the obligation to grant advances, such State shall have an ex officio seat on the Assembly.

(b) The State referred to in subparagraph (a) and the Organization shall each have the right to denounce the obligation to grant advances, by written notification. Denunciation shall take effect three years after the end of the year in which it has been notified.

(9) The auditing of the accounts shall be effected by one or more of the States of the Union or by external auditors, as provided in the financial regulations. They shall be designated, with their agreement, by the Assembly.

NOTES TO ARTICLE 53

Paragraphs (1) to (4) : ——.
Paragraphs (5) and (6) : ——.
Paragraphs (7) and (8) : ——.
Paragraph (9) : ——.

ARTICLE 54

Regulations

(1) The Regulations provide Rules:

(i) concerning matters in respect of which this Treaty expressly refers to the Regulations or expressly provides that they are or shall be prescribed,

(ii) concerning any administrative requirements, matters, or procedures,

(iii) concerning any details useful in the implementation of the provisions of this Treaty.

(2)(a) The Regulations specify the Rules which may be amended only by unanimous consent.

(b) Exclusion, for the future, of any such Rules from the requirement of unanimity shall require unanimous consent.

(3) The Regulations provide for the establishment, under the control of the Assembly, of Administrative Instructions by the Director General.

NOTES TO ARTICLE 54

Paragraph (1)(i) : See the following Articles: 2(2)(e), 3(2), (3), 4(1)(iii), 8, 9(2)(b), 10(4), 11(1)(ii)(iii), 12(2), 14(1)(a)(i)(ii)(v), (vi)(b), (4), 15(4), 16(3)(c), (4)(a), 17(1), (2)(a)(i), (ii), (3)(a)(b), 18(1), (3), 19, 21(4), 25(1), (2), 26(1), 27(1), 28, 31(1), (2), (3), (5), 33(2), (3), 34(1), (2)(b)(c), (3), (4)(a)(i), 35(1), (2), (3), 36(1), (2)(a), (3)(b), 41, 47(1), (2)(c), 48(1), 50(5)(b), 51(5), (6), (7), 52(4).
Paragraph (1)(ii) and (iii) : ——.
Paragraph (2)(a) : See Rule 80 (Amendment of the Regulations; Requirement of unanimity).
Paragraph (2)(b) : ——.
Paragraph (3) : See Rule 81 (Administrative Instructions).

ARTICLE 55

Revision of the Treaty

(1) This Treaty may be revised from time to time by a special conference of the member States.

(2) The convocation of any revision conference shall be decided by the Assembly.

(3) Articles 50(5), (8) and (9), 51(4) to (9), 52, and 53, may be amended outside revision conferences, as provided in Article 56.

NOTES TO ARTICLE 55

Paragraphs (1) to (3) : ——.

ARTICLE 56

Amendment of Certain Provisions of the Treaty

(1)(a) Proposals for the amendment of Articles 50(5), (8) and (9), 51(4) to (9), 52, and 53, may be initiated by any State member of the Assembly, by the Executive Committee (once established), or by the Director General.

(b) Such proposals shall be communicated by the Director General to the member States at least six months in advance of their consideration by the Assembly.

(2)(a) Amendments to the Articles referred to in paragraph (1) shall be adopted by the Assembly.

(b) Adoption shall require three-fourths of the votes cast.

(3)(a) Any amendment to the Articles referred to in paragraph (1) shall enter into force one month after written notifications of acceptance, effected in accordance with their respective constitutional processes, have been received by the Director General from three-fourths of the States members of the Assembly at the time it adopted the amendment.

(b) Any amendment to the said Articles thus accepted shall bind all the States which are members of the Assembly at the time the amendment enters into force, or which become members thereof at a subsequent date, provided that any amendment increasing the financial obligations of the member States of the Union shall bind only those States which have notified their acceptance of such amendment.

NOTES TO ARTICLE 56

Paragraph (1)(a) : Article 50(5), (8) and (9) deals with the quorum of the Assembly, the Executive Committee, and the convocation of meetings. Article 51(4) to (9) deals with certain details of the tasks of the International Bureau. Article 52 deals with the Advisory Committee on International Searching and International Preliminary Examination.

Article 53 deals with finances (see, however, Article 56(3)(b) which provides that any amendment increasing the financial obligations of the Member States of the Union shall bind only those States which have (expressly and individually) notified their acceptance of such amendment).

Paragraph (1)(b): ——.

Paragraphs (2) and (3): ——.

CHAPTER V: FINAL PROVISIONS

NOTES TO CHAPTER V

This Chapter, entitled "Final Provisions" consists of 9 Articles (Articles 57 to 65).

The first five deal with the questions of becoming party to the Treaty and the entry into force of the Treaty. The matter of reservation concerning Chapter II is dealt with in Article 60(1).

Article 62 deals with denunciation.

Articles 63 to 65 deal with formal matters (signature and languages, depositary functions, notifications).

ARTICLE 57

Becoming Party to the Treaty

(1) Any State member of the International Union for the Protection of Industrial Property may become party to this Treaty by:

(i) signature without reservation as to ratification, or

(ii) signature subject to ratification followed by the deposit of an instrument of ratification, or

(iii) deposit of an instrument of accession.

(2) Instruments of ratification or accession shall be deposited with the Director General.

NOTES TO ARTICLE 57

Paragraphs (1) and (2): ——.

ARTICLE 58

Entry into Force of the Treaty

(1) Subject to the provisions of paragraph (2), this Treaty shall enter into force three months after both of the following conditions have been fulfilled:

(i) the number of States having taken action as provided in Article 57 is not less than five;

(ii) among the States having taken action as provided in Article 57, there are at least three in each of which, according to the latest available yearly statistics, the number of applications for patents or inventors' certificates has exceeded 40,000.

(2) If, at the time this Treaty enters into force by virtue of the provisions of paragraph (1), there are States which have declared, as provided in Article 60, that they are not bound by the provisions of Chapter II, the provisions of Chapter II shall become applicable only if the condition referred to in paragraph (1)(ii) is fulfilled by States not having made such a declaration. Should the said condition be fulfilled only by reason that one or more additional States have become party to this Treaty, the provisions of Chapter II shall become applicable when the last State required to fulfill the said condition becomes bound by this Treaty under Article 59.

NOTES TO ARTICLE 58

Paragraphs (1) and (2): ——.

ARTICLE 59

Effective Date of the Treaty for States not Covered by Article 58

Any State not covered by the provisions of Article 58 shall become bound by this Treaty three months after the date on which such State has taken action as provided in Article 57.

ARTICLE 60

Reservations

(1)(a) Any State may, at the time it signs this Treaty or deposits its instrument of ratification or accession, declare in writing that it shall not be bound by the provisions of Chapter II. States making such declaration shall not be bound by the provisions of the said Chapter.

(b) Any State not making a declaration under subparagraph (a) may later make such declaration by a notification addressed to the Director General. Such later declaration shall become effective six months after it has been deposited with the Director General. It shall not affect international applications filed prior to the expiration of the said six-month period.

(c) Any State having made a declaration under subparagraph (a) may later withdraw its declaration by a notification addressed to the Director General. Such withdrawal shall become effective three months after the notification has been received by the Director General.

(2) No reservation to this Treaty other than the reservation admitted under paragraph (1) is permitted.

NOTES TO ARTICLE 60

Paragraph (1)(a): Chapter II deals with international preliminary examination.

Paragraph (1)(b) and (c): ——.

Paragraph (2): ——.

ARTICLE 61

Gradual Application

If, for an initial period or in connection with any additional State which becomes bound by this Treaty or Chapter II thereof, the agreement with any Searching or Preliminary Examining Authority provides, transitionally, for limits on the number or kind of international applications that such Authority undertakes to process, the Assembly shall adopt the measures necessary for the gradual application of the Treaty in respect of given categories of international applications.

NOTES TO ARTICLE 61

Chapter II deals with international preliminary examination.

ARTICLE 62

Denunciation

(1) Any member State may denounce this Treaty by notification addressed to the Director General.

(2) Denunciation shall take effect six months after receipt of the said notification by the Director General. It shall not affect international applications filed prior to the expiration of the said six-month period, provided that the designation or election of the denouncing State has been effected prior to the expiration of the same time limit.

NOTES TO ARTICLE 62

Paragraphs (1) to (2): ——.

ARTICLE 63

Signature and Languages

(1)(a) This Treaty shall be signed in a single copy in the English and French languages.

(b) Official texts shall be established by the Director General, after consultation with the interested Governments, in the German, Japanese, Russian and Spanish languages, and such other languages as the Assembly may designate.

(2) This Treaty shall remain open for signature for six months.

NOTES TO ARTICLE 63

Paragraphs (1) and (2): ——.

ARTICLE 64

Depositary Functions

(1) The signed copy of this Treaty shall be deposited with the Director General.

(2) The Director General shall transmit two copies, certified by him, of this Treaty to the Governments of all States members of the International Union for the Protection of Industrial Property and, on request, to the Government of any other State.

(3) The Director General shall register this Treaty with the Secretariat of the United Nations.

NOTES TO ARTICLE 64

Paragraphs (1) to (3): ——.

ARTICLE 65

Notifications

The Director General shall notify the Governments of all States members of the International Union for the Protection of Industrial Property of signatures, deposits of instruments of ratifiction or accession, any declaration or notification made under Article 60, any denunciation, and the relevant dates under Articles 57 to 62.

NOTES TO ARTICLE 65

Article 60(1) deals with the possibility of reservation concerning Chapter II (International Preliminary Examination). Articles 57 to 62 are all among the "Final Provisions."

IN WITNESS WHEREOF, the undersigned, being duly authorized thereto, have signed this Treaty.

DONE at ----, on ----

[Follow names of States]

PCT/III/6—Original: English—July 15, 1968

DRAFT REGULATIONS

TABLE OF RULES OF THE DRAFT REGULATIONS UNDER THE DRAFT PATENT COOPERATION TREATY

PART A

Introductory Rules

PART B

Rules Concerning Chapter I of the Treaty

PART C

Rules Concerning Chapter II of the Treaty

Regulations Under the Draft Patent Cooperation Treaty

(DRAFT)

PART A.—INTRODUCTORY RULES

RULE 1

Abbreviated Expressions

1.1 *Meaning of Abbreviated Expessions*

(a) In these Regulations, the word "Treaty" means the Patent Cooperation Treaty.

(b) In these Regulations, the words "Chapter" and "Article" refer to the specified Chapter or Article of the Treaty.

(c) In these Regulations, the expressions "search report," "preliminary examination report," "Searching Authority" and "Preliminary Examining Authority" mean international search report, international preliminary examination report, International Searching Authority and International Preliminary Examining Authority, respectively.

RULE 2

Interpretation of Certain Words

2.1 *"Applicant"*

Whenever the word "applicant" is used, it shall be construed as meaning also the agent or other representative of the applicant, except where the contrary clearly follows from the wording or the nature of the provision, or the context in which the word is used, such as, in particular, where the provision refers to the residence or nationality of the applicant or his being the inventor or the inventor's successor in title.

2.2 *"Agent"*

Whenever the word "agent" is used, it shall be construed as meaning any person who has the right to practice before international authorities as defined in Article 49 and, unless the contrary clearly follows from the wording or the nature of the provision, or the context in which the word is used, also the common representative referred to in Rule 5.8.

2.3 *"Signature"*

Whenever the word "signature" is used, it shall be understood that, if the domestic law of the Receiving Office or the competent Searching or Preliminary Examining Authority requires the use of a seal instead of a signature,[1] the word, for the purposes of that Office or Authority, shall mean seal.

[1] *Observation:* Japan is the only country in which this provision would seem to be needed.

PART B.—RULES CONCERNING CHAPTER I OF THE TREATY

RULE 3

Subject of the International Application

3.1 *Subject Admitted*

The subject of international applications must be inventions.

3.2 *Subject Excluded*

For the purposes of the Treaty, applications for the

protection of the following shall in particular not be considered applications concerning inventions:

(i) scientific and mathematical discoveries and theories,
(ii) new plant and animal varieties, other than microbiological products,
(iii) schemes or methods of doing business or performing calculations,
(iv) rules or schemes for playing games,
(v) therapeutic methods,
(vi) computer programs,
(vii) ornamental (industrial) designs.

3.3 *Form of Protection*

Even if the domestic laws of the designated States provide for the grant of patents for a subject other than inventions, such as "design patents," "trademark patents," "plant patents," or "discovery patents," no international application may relate to such subject or such patents.

3.4 *Purview of the Treaty*

For the purposes of Articles 11(1)(iii) and 17(2)(a)(i), the provisions of Rules 3.1, 3.2, and 3.3 shall govern in determining what subject is outside the purview of the Treaty.

RULE 4

The Request (Form)

4.1 *Printed Form*

The request shall be written on a printed form.

4.2 *Availability of Forms*

Copies of the printed form shall be furnished free of charge by the Receiving Offices to the applicants.

4.3 *Particulars*

The particulars of the said form shall be prescribed by the Administrative Instructions.

RULE 5

The Request (Contents)

5.1 *Mandatory and Optional Contents; Signature*

(a) The request shall contain:

(i) a petition,
(ii) the title of the invention,
(iii) indications concerning the applicant, the inventor, and the agent, if there is an agent,
(iv) the designation of States.

(b) The request may contain:

(i) a priority claim,
(ii) a reference to any earlier international search,
(iii) choices of certain forms of protection,
(iv) a reference to any parent application.

(c) The request shall be signed.

5.2 *The Petition*

The petition shall be worded as follows: "The undersigned requests that the present international application be processed according to the Patent Cooperation Treaty."

5.3 *Title of Invention*

The title of the invention shall be short (preferably from 2 to 7 words) and precise.

5.4 *Names and Addresses*

(a) Names of natural persons shall be indicated by the person's given name(s) and family name.

(b) Names of legal entities shall be indicated by their full, official designations.

(c) Addresses shall be indicated in such a way as to satisfy the customary requirements for prompt postal delivery at the indicated address. It is recommended to indicate also any telegraphic address and telephone number.

5.5 *The Applicant*

(a) The request shall indicate the name, address, nationality and residence of the applicant or, if there are several applicants, of each of them.

(b) The applicant's nationality shall be indicated by the name of the State of which he is a national.

(c) The applicant's residence shall be indicated by the name of the State of which he is a resident.

5.6 *The Inventor*

(a) If the applicant is the inventor, the request shall contain a statement to that effect or shall repeat the applicant's name in the space reserved for indicating the inventor.

(b) If the applicant is not the inventor, the request shall:

(i) indicate who is the inventor by specifying his name and address, and
(ii) contain a statement to the effect that the applicant is a successor in title of the inventor at least for the purposes of filing the international application.

5.7 *The Agent*

(a) If an agent is designated, the request shall so indicate, and shall indicate the name and address of the agent.

(b) It is recommended to indicate also the telephone and telex numbers of the agent's office.

5.8 *Representation of Several Applicants Not Having a Common Agent*

(a) If there is more than one applicant and the request does not refer to an agent representing all the applicants ("a common agent"), the request shall designate one of the applicants as their common representative.

(b) If the request does not comply with the foregoing requirement, the applicant first named in the request shall be considered the common representative.

5.9 *Designation of States*

Contracting States shall be designated in the request by their names.

5.10 *Priority Claim*

(a) If the priority of a first national application, within the meaning of the Paris Convention, is claimed, the request shall contain a statement to that effect, and an indication of the State, date and number of the first national application, preferably in the following terms: "The priority of the following national application, which is the first application within the meaning of Article 4 of the Paris Convention, is claimed: . . . (country of filing) . . . (date of filing) . . . (number of filing)."

(b) If the request does not indicate the State and the date of the first national application, or if the application number of such first national application is not separately submitted prior to the expiration of the 16th month from the priority date, the priority claim shall, for

the purposes of the procedure under the Treaty, be considered as if it had not been presented.

(c) The priorities of several national applications may be claimed, the provisions of subparagraphs (a) and (b) applying to each of them.

5.11 *Reference to Earlier International Search*

If, before filing the international application, an international-type search has been requested on a national application (or its translation, as the case may be) which the applicant considers to relate to the same invention as claimed in the international application, and if the said search has been requested from the same administration as is competent for effecting the international search on the international application, the request may state that fact and identitfy the national application (or its translation, as the case may be) by date and number, and the request by date and, if available, number.

5.12 *Choice of Certain Kinds of Protection*

(a) If the applicant wishes that his international application be treated, in any designated State, as an application not for a patent but for the grant of an inventor's certificate, a utility certificate, a utility model, or a patent of addition, he may so specify in the request.

(b) Any such indication may immediately follow the name of the designated State.

(c) If the request asks for a patent of addition in any State, it shall indicate the patent, or the national or international application, to which the patent of addition, if granted, will relate.

5.13 *Reference to Parent Application*

If the international application is a divisional international application, the request shall contain a statement to that effect together with the filing date and filing number of the parent international application.

5.14 *Signature*

The request shall be signed by the applicant.

5.15 *No Additional Matter*

(a) The request shall contain no matter other than that specified in Rule 5.1 to 5.14.

(b) If the preceding provision is not complied with, the Receiving Office shall ex officio delete the additional matter.

RULE 6

The Description

6.1 *Manner of the Description*

(a) The description shall:

(i) indicate in general the technical field to which the invention relates;

(ii) indicate the relevant prior art as far as known to the applicant, and, preferably, cite the documents reflecting such art;

(iii) explain the invention, as claimed, in such terms that the technical problem and its solution can be understood;

(iv) briefly describe the figures in the drawings, if any;

(v) describe in detail at least one way of carrying out the invention claimed; this shall be done in terms of examples, where appropriate, and with reference to the drawings, if any;

(vi) indicate the way in which the invention can be made and used in industry, or, if it can only be made or only be used, the way in which it can be made or used.

(b) The manner and order specified in paragraph (a) shall be followed except when, because of the nature of the invention, a different manner or a different order would result in a better understanding and a more economic presentation.

(c) Subject to the provisions of paragraph (b), each of the parts referred to in paragraph (a) shall be preceded by an appropriate heading as suggested in the Administrative Instructions.

6.2 *Matter Excluded*

(a) The description shall not contain:

(i) expressions contrary to morality;

(ii) expressions contrary to *ordre public;*

(iii) statements disparaging the products or processes of any given person other than the applicant, or the merits or validity of applications or patents of any such person;

(iv) references to products, processes, or services, in terms of trademarks or service marks;

(v) fancy names or expressions coined by the applicant;

(vi) any matter obviously irrelevant under the circumstances.

(b) The provisions of paragraph (a) shall apply also to every other part of the international application.

RULE 7

The Claims

7.1 *Number and Numbering of Claims*

(a) The number of the claims shall be reasonable in consideration of the nature of the invention claimed.

(b) If there are several claims, they shall be numbered consecutively in Arabic numerals.

(c) The method of numbering in the case of the amendment of claims shall be governed by the Administrative Instructions.

7.2 *References to Other Parts of the Application*

(a) Claims shall not rely, in respect of the technical features of the invention, on references to the description or drawings. In particular, they shall not rely on such references as: "as described in part . . . of the description," or "as illustrated in figure . . . of the drawings."

(b) Where the international application contains drawings, the technical features mentioned in the claims shall be followed by illustrative references to the relevant figure of the drawings. The reference shall consist of identification—by the appropriate number, letters, or symbol—of the relevant figure or the relevant part of such figure. The reference shall be placed between parentheses. If reference to drawings does not particularly facilitate quicker understanding of the claim, it shall not be made. Such references may be removed by the designated Office for the purposes of publication by such Office.

7.3 *Manner of Claiming*

(a) The definition of the protection applied for shall be in terms of the technical features of the invention.

(b) Whenever practical, claims shall contain:

(i) a statement indicating those technical features of the invention which are necessary for the definition of the claimed subject matter but which, in combination, are part of the prior art,

(ii) a characterizing portion—preceded by the words "characterized in that," "characterized by," "wherein the improvement comprises," or any other words to the same effect—stating concisely the technical features which, in combination with the features stated under (i), it is desired to protect.

7.4 *Dependent Claims*

(a) Any claim which includes all the features of one or more other claims ("dependent claim") shall contain a reference, preferably at the beginning, to the other claim or claims and shall then state the additional features claimed.

(b) Any dependent claim shall be construed as including all the limitations contained in the claim or claims to which it refers.

(c) All dependent claims referring back to a single previous claim shall be grouped together, whereas all dependent claims referring back to several previous claims shall be grouped together to the extent and in the most practical way possible.

RULE 8

The Drawings

8.1 *Flow Sheets and Diagrams*

Flow sheets and diagrams are considered drawings.

RULE 9

The Abstract

9.1 *Contents and Form of Abstract*

(a) The abstract shall be clear and concise.

(b) The abstract shall consist of a brief statement of the contents of the disclosure as contained in the description, the claims, and any drawings.

(c) The statement shall be as brief as the subject permits and should normally consist of a single paragraph containing 50 to 150 words.

(d) The statement shall be in the nature of a condensation, rather than a description. It shall not contain statements on the alleged merits or value of the claimed invention or on its speculative applications.

(e) The abstract shall include an indication of the principal use of the subject matter of the disclosure.

9.2 *Indications for the Purposes of Publication*

(a) For the purposes of any publication of the abstract, the abstract shall contain or be accompanied by an indication of the drawing and/or, where relevant, the chemical formula which the applicant suggests should be included in such publication.

(b) The indication of the drawing shall be by reference to the number of the figure or figures of the drawings.

(c) The indication of the chemical formula shall be by repeating the relevant formula employed in the description or in the claims.

(d) The selected drawing and formula shall be the most illustrative, among all drawings and formulae contained in the application, of the disclosure as a whole.

9.3 *Guiding Principles in Drafting*

(a) The abstract shall be so drafted that it:

(i) enables the reader quickly to recognize the nature and gist of the disclosure,

(ii) can efficiently serve as a searching-scanning tool for the scientist, engineer or researcher in the particular art, especially in order to indicate whether there is a need for consulting the international application itself.

(b) The abstract shall be so drafted that it takes account of the fact that it serves the purposes of technical information and not legal purposes.

RULE 10

Terminology and Signs

10.1 *Teminology and Signs*

(a) Units of weights and measures shall be expressed in term of the metric system, or also expressed in such terms if first expressed in terms of a different system.

(b) Temperatures shall be expressed in degrees centigrade, or also expressed in degrees centigrade if first expressed in a different manner.

(c) Density shall be expressed in metric units.

(d) For mathematical formulae and electrical units, the rules agreed by international practice shall be observed; for chemical formulae, the symbols, atomic weights, and molecular formulae, in general use shall be employed.

(e) In general, only such technical terms, signs and symbols should be used as are generally accepted in the art.

10.2 *Consistency*

The terminology and the signs shall be consistent throughout the international application.

RULE 11

Physical Requirements of Application

11.1 *Number of Copies*

(a) Subject to the provisions of paragraph (b), the international application shall be filed in one copy.

(b) Any Receiving Office may require that the international application be filed in two or three copies. In that case, the Receiving Office shall be responsible for verifying the identity of the second and the third copies with the record copy.

11.2 *Fitness for Reproduction*

(a) All elements of the application (i.e., the request, the description, the claims, the drawings (if any), and the abstract), shall be so presented as to admit of direct reproduction by photography, xerography, photo offset, and microfilming, in any number of copies.

(b) All sheets shall be free from creases and cracks; they shall not be folded; they shall be reasonably free from erasures.

(c) Only one side of each sheet shall be used.

(d) Each sheet shall be used in an upright position (i.e., the short sides at the top and bottom).

11.3 *Material To Be Used*

(a) Subject to paragraph (b), all elements shall be on paper which shall be flexible, strong, white, smooth, nonshiny, and durable.

(b) Drawings shall be either on paper as described above or on flexible and transparent material which shall be strong, smooth, non-shiny, and durable.

11.4 *Separate Sheets, etc.*

(a) Each element of the application shall commence on a new sheet.

(b) All sheets of the application shall be so connected that they can be easily turned when consulted, and easily separated and joined again if they have been separated for reproduction purposes.

11.5 *Size of Sheets*

The size of the sheets shall be A4 (29.7 cm. x 21 cm.). However, any Receiving Office may accept international applications on sheets of other sizes provided the record copy, as transmitted to the International Bureau, and, if the competent Searching Authority so desires, the search copy, shall be of A4-size.

11.6 *Margins*

(a) The minimum margins of the sheets containing the request (if not on the official printed form), the description, the claims, and the abstracts shall be as follows:

—top of first sheet: 8 cm.
—top of other sheets: 2 cm.
—left side: 3 cm.
—right side: 2 cm.
—bottom: 2 cm.

(b) The recommended maximum, for the margins provided for in paragraph (a), is as follows:

—top of first sheet: 9 cm.
—top of other sheets: 4 cm.
—left side: 4 cm.
—right side: 3 cm.
—bottom: 3 cm.

(c) On sheets containing drawings, the surface usable shall not exceed 26.2 cm. x 18.0 cm. [*Alternative*: 26.2 cm. x 17.0 cm.]. The sheets shall not contain frames around the usable or used surface. The minimum margins shall be as follows:

—top: 2.5 cm.
—left side: 1.5 cm. [*Alternative*: 2.5 cm.]
—right side: 1.5 cm.
—bottom: 1.0 cm.

(d) The margins referred to in paragraphs (a) to (c) apply to A4-size sheets, so that, even if the Receiving Office accepts other sizes, the A4-size record copy and, when so required, the A4-size search copy shall leave the aforesaid margins.

(e) The margins, when the international application is submitted, must be completely blank.

11.7 *Numbering of Sheets of Description and Claims*

(a) If the description consists of more than one sheet, the sheets shall be numbered in consecutive arabic numerals.

(b) If the claims consist of more than one sheet, the sheets shall be numbered in consecutive arabic numerals.

(c) In either set of sheets, the first sheet shall be numbered "1," and the last line on the last sheet shall be followed by an indication that the description and the claims, respectively, end there (for example, by the use of the words "end" or "end of description," "end of claim").

(d) All numbers shall be placed at the bottom of the sheet, in the middle, above the margin.

11.8 *Numbering of Sheets of Drawings*

(a) Each sheet of the drawings shall show the total number of sheets of drawings in roman numerals, and the number of the particular sheet in arabic numerals.

(b) The numbers shall preferably be placed at the bottom of the sheet, in the middle. In any case, they shall be placed near, but not in, the margin.

11.9 *Numbering of Lines*

(a) It is strongly recommended to number every fifth line in the description and in the claims.

(b) The numbers should appear on the left side, to the right of the margin.

11.10 *Writing of Text Matter*

(a) The request, the description, the claims and the abstract shall be typed or printed.

(b) Only graphic symbols and characters, chemical or mathematical formulae, and certain characters in the Japanese language may, when necessary, be written by hand or drawn.

(c) The typing shall be single-spaced [*Alternative*: 1½-spaced].

(d) All text matter shall be in characters not less than 0.27 cm. high (the capital letters), and shall be in a dark indelible color, satisfying the requirements specified in Rule 11.2.

11.11 *Drawings in Text Matter*

(a) The request, the description, the claims and the abstract shall not contain drawings.

(b) The description, the claims and the abstract may contain chemical or mathematical formulae.

(c) The description and the abstract may contain charts and tables.

11.12 *Words in Drawings*

(a) The drawings shall not contain text matter, except single words, when absolutely indispensable, such as "water," "steam," "open," "closed," "section on AB," and, in the case of electric circuits and block schematic or flow sheet diagrams, a few short catch words indispensable for understanding.

(b) Any words used shall be so placed that, if translated, they may be pasted over without interfering with any lines of the drawings.

11.13 *Headings*

The first sheet of the description, the first sheet of the claims, and the sheet containing the abstract, shall reproduce the full name of the applicant and the full title of the invention ("heading"). This heading shall be written immediately below the top margin.

11.14 *Alterations, etc.*

Each sheet shall be free from alterations, overwritings, and interlineations. Non-compliance with this rule may be authorized, in exceptional cases, if the authenticity of the content is not in question and the requirements for good reproduction are not in jeopardy.

11.15 *Special Requirements for Drawings*

(a) Drawings shall be executed in durable, black or blue, sufficiently dense and dark, uniformly thick, and well-defined, lines and strokes without colors or color washes.

(b) Cross-sections shall be indicated by oblique hatching which should not impede the clear reading of the reference signs and leading lines.

(c) The scale of the drawings and the distinctness of their graphical execution shall be such that a photographic reproduction with a linear reduction in size to two-thirds would enable all details to be distinguished without difficulty.

(d) When, in exceptional cases, the scale is given on a drawing, it shall be represented graphically.

(e) All numbers, letters, and reference lines, appearing on the drawings, shall be simple and clear. Brackets, circles or inverted commas shall not be used in association with numbers and letters.

(f) All lines in the drawings shall, ordinarily, be drawn with the aid of drafting instruments.

(g) Each element of each figure shall be in proper proportion to each of the other elements in the figure.

(h) The height of the numbers and letters shall not be less than 0.32 cm. For the lettering of drawings, the Latin alphabet shall be used.

(i) The same sheet of drawings may contain several figures.

(j) The different figures shall be arranged on a sheet or sheets without wasting space, preferably in an upright position, clearly separated from one another.

(k) The different figures shall be numbered in arabic numerals consecutively and independently of the numbering of the sheets.

(l) Reference signs not mentioned in the description shall not appear in the drawings.

(m) The same features, when denoted by reference signs, shall, throughout the application, be denoted by the same signs.

11.16 *Later Documents*

Rules 10, and 11.1 to 11.15, also apply to any document—for example, corrected pages, amended claims—submitted subsequently to the filing of the application.

11.17 *Translations*

No designated Office shall require that the translation of an international application filed with it comply with requirements other than those prescribed in Rules 10, and 11.1 to 11.16.

RULE 12

Language of the International Application

12.1 *International Application*

Any international application shall be filed in the language, or one of the languages, specified in the agreement concluded between the International Bureau and the Searching Authority competent for the international searching of that application.

12.2 *Changes in the International Application*

Any changes in the international application, such as amended claims and corrections, shall be in the same language as the said application.

RULE 13

Unity of Invention

13.1 *Requirement*

The international application shall relate to one invention only or to a group of inventions so linked as to form a single general inventive concept ("requirement of unity of invention").

13.2 *Products, Processes, Etc.*

The requirement of unity of invention shall be considered fulfilled:

either, if, in addition to claims for a given *product*, claims for one process for the manufacture of the said product, and/or claims for one application or use of the said product, are presented, or

if, in addition to claims for a given *process*, claims for one apparatus or means specifically designed for carrying out the said process are presented.

13.3 *Guide Lines* [2]

(a) The fact that several independent claims, all relating to products, or to processes, or to apparatus, are presented—particularly in cases where the subject matter does not admit of ready definition in a single independent claim—does not, in itself, indicate failure to comply with the requirement of unity of invention.

(b) Generally, the requirement of unity of invention is fulfilled if the international application provides several solutions of a hitherto unsolved technical problem.

(c) The fact that any given international application would require the searching of fields generally regarded as unrelated to each other, or the fact that it relates to inventions generally considered to have separate status in the art, normally connotes that the inventions are not so linked as to form a single general inventive concept.

[2] *Observation:* Rule 13.3 might eventually be transferred to the Administrative Instructions.

RULE 14

Transmittal Fee

14.1 *Transmittal Fee*

(a) Any Receiving Office may require that the applicant pay a fee to it, for its own benefit, for receiving the international application, transmitting copies to the International Bureau and the competent Searching Authority, and performing all the other tasks which it must perform in connection with the international application in its capacity of Receiving Office ("transmittal fee").

(b) The amount and the due date of the trannsmittal fee, if any, shall be fixed by the Receiving Office.

RULE 15

International Fee

15.1 *Requirement to Pay*

Each international application shall be subject to the payment of a fee for the benefit of the International Bureau ("international fee").

15.2 *Amount*

(a) The amount of the international fee shall be . . . if the application contains not more than 50 sheets.

(b) The international fee shall be increased by . . . per sheet in excess of 50 sheets.

15.3 *Mode and Time of Payment*

(a) The international fee shall be collected by the Receiving Office.

(b) The international fee shall be due at the time when the international application is received. However, any Receiving Office may, at its discretion, permit applicants to pay later, provided that:

(i) permission shall not be given to pay later than one month after the date of receipt of the international application;
(ii) permission may not be subject to any extra charge.

(c) The international fee shall be payable in the currency prescribed by the Receiving Office, it being understood that, when transferred by the Receiving Office to the International Bureau, it shall be freely convertible into Swiss currency.

15.4 *Refund*

(a) The international fee shall be refunded to the applicant if the determination referred to in Rule 20.3 is negative.

(b) In no other case shall the international fee be refunded.

RULE 16

Search Fee

16.1 *Where the Searching Authority is the International Patent Institute*

(a) Where the competent Searching Authority is the International Patent Institute and the applicant is a national of a State which is a member of that Institute, the said Institute may require that the applicant pay a fee for its own benefit for carrying out the international search and for performing all other tasks entrusted to Searching Authorities by the Treaty and these Regulations.

(b) Where the competent Searching Authority is the International Patent Institute and the applicant is a national of a State which is not a member of the Institute, the international application shall be subject to the payment of a fee for the benefit of the Institute for carrying out the international search and for performing all other tasks entrusted to Searching Authorities by the Treaty and these Regulations. The amount of the fee shall be fixed in an agreement between the International Bureau and the Institute. The agreement shall also fix the conditions and extent of refund of part or all of the search fee where the determination under Rule 20.3 is negative, or where the international search was preceded by an international-type search on a national application concerning the same disclosure (see Rule 5.11), or where the international application is withdrawn before the international search has been completed, and possibly other cases. The relevant portions of the agreement referred to in this paragraph shall be promptly published by the International Bureau.

(c) The fee shall be collected by the Receiving Office and shall be due at the same time and under the same conditions as the international fee (see Rule 15), except that it shall be payable in a currency which is freely convertible into Netherlands currency.

16.2 *Where the Searching Authority is a National Office*

Where the competent Searching Authority is a national Office, such Office may require that the applicant pay a fee for its own benefit for carrying out the international search and for performing all other tasks entrusted to Searching Authorities by the Treaty and these Regulations.

RULE 17

The Priority Document

17.1 *Obligation to Submit*

(a) Where the priority of a first national application is claimed in the international application, a copy of the said national application, certified by the national Office in which it was filed ("the priority document"), shall be submitted by the applicant to the International Bureau not later than 16 months after the priority date.

(b) If the applicant fails to comply with the requirement under paragraph (a), any designated State may disregard the priority claim.

(c) The International Bureau shall record the date on which it received the priority document and shall notify the applicant accordingly.

17.2 *Availability of Copies*

(a) The International Bureau shall, at the specific request of the designated State and at the expense of the applicant, furnish a copy of the priority document to any designated Office. No such Office shall ask the applicant to furnish it with a copy.

(b) The International Bureau shall not make available to the public copies of the priority document prior to the international publication of the international application.

RULE 18

The Applicant

18.1 *Residence*

(a) Subject to the provisions of paragraph (b), the question whether an applicant is a resident of the Contracting State of which he claims to be a resident shall depend on the domestic law of that State and shall be decided by the Receiving Office.

(b) In any case, possession of a real and effective industrial or commercial establishment in a Contracting State shall be considered residence in that State.

18.2 *Nationality*

(a) Subject to the provisions of paragraph (b), the question whether an applicant is a national of the Contracting State of which he claims to be a national shall depend on the domestic law of that State and shall be decided by the Receiving Office.

(b) In any case, a legal entity constituted according to the law of a Contracting State shall be considered a national of that State.

18.3 *Several Applicants*

If all the applicants are applicants for the purposes of all designated States, the requirement provided for under Article 9(2)(a) shall be considered fulfilled if:

(i) where the request designates one of the applicants as the common representative of all applicants, such applicant fulfils the said requirement,
(ii) where the request does not designate one of the applicants as the common representative of all applicants, the applicant first named in the request fulfils the said requirement.

18.4 *Different Applicants for Different Designated States*

(a) The application may indicate different applicants for the purposes of different designated States, provided:

(i) that the requirement specified in item (i) or item (ii) of Rule 18.3 is fulfilled, and

(ii) that at least one of the applicants indicated for the purposes of any designated State fulfills the requirement provided for under Article 9(2)(a).

(b) If the requirement under paragraph (a)(ii) is not fulfilled in respect of any designated State, the designation of that State shall be considered not to have been made.

RULE 19

Competence of the Receiving Office

19.1 *Several Applicants*

If there are several applicants, only the applicant first named in the request shall, for the purposes of applying Article 10(1), be considered.

RULE 20

Receipt of the Application

20.1 *Date and Number*

(a) Upon receipt of papers purporting to be an international application, the Receiving Office shall indelibly mark the date of actual receipt on the first sheet (the request) and one of the numbers assigned by the International Bureau to that Office on each sheet.

(b) The place on each sheet where the date or number shall be marked, and other details, shall be specified in the Administrative Instructions.

20.2 *Receipt on Different Days*

In cases where all the sheets pertaining to the same purported application are not received on the same day by the Receiving Office, that Office may, at its discretion, either:

(i) send back the papers to the applicant, or
(ii) correct the date marked on the request so that it indicates the day on which the papers completing the application for the purposes of Article 11(1) were received.

20.3 *Determination Under Article 11(1)*

Promptly after receipt of the papers purporting to be an international application, the Receiving Office shall determine whether the papers comply with the requirements of Article 11(1), as further specified in Articles 3, 9, and 10, and Rules 3, 12, 18, and 19.

20.4 *Positive Determination*

(a) If the determination under Rule 20.3 is positive, the Receiving Office shall mark on the sheet containing the request a stamp containing the name of the Receiving Office and the words "International Application," or "Demande internationale." If the official language of the Receiving Office is neither English nor French, the words "International Application" or "Demande internationale" may be accompanied by a translation of these words in the official language of the Receiving Office.

(b) The copy whose request sheet has been so stamped shall be the authentic copy ("record copy") of the international application.

(c) The Receiving Office shall promptly notify the applicant of the international application number and the international filing date.

20.5 *Negative Determination*

If the determination under Rule 20.3 is negative, the Receiving Office shall:

(i) promptly notify the applicant that his application is not treated as an international application and shall indicate the reasons therefor, and
(ii) notify the International Bureau that the number it has marked on the papers shall not be used as an international application number.

20.6 *Home Copy*

The Receiving Office shall keep in its files a copy of the application as received, irrespective of whether the determination is positive or negative.

RULE 21

Preparation of Copies

21.1 *Responsibility of Receiving Office*

(a) If the international application was filed in one copy, the Receiving Office shall be responsible for preparing the search copy required under Article 12(1)(a).

(b) If the international application was filed in several copies, the Receiving Office shall be responsible for checking the identity of the search copy with the record copy.

(c) The Receiving Office shall be responsible for preparing the copy it keeps in its files ("home copy").

RULE 22

Transmittal of the Record Copy and the Search Copy

22.1 *Direct Transmittal of the Record Copy*

Unless the applicant avails himself of the possibility provided for in Article 12(2), the Receiving Office shall transmit the record copy to the International Bureau as soon as practicable.

22.2 *Transmittal of the Record Copy Through the Applicant*

(a) The request provided for in Article 12(2) shall be presented together with the application.

(b) The request shall specify whether the applicant wishes to collect the record copy at the Receiving Office or wishes the Receiving Office to mail the record copy to him.

(c) If the applicant expresses the wish to collect the record copy, the Receiving Office shall hold that copy at the disposal of the applicant not later than from the 15th day after the expiration of one year from the priority date.

(d) If the applicant expresses the wish that the Receiving Office mail the record copy to him, the said Office shall do so not later than the 15th day after the expiration of one year from the priority date. The consequences of delay or loss in the mail cannot, in such case, be avoided by invoking Rule 76.1 or 76.2, but can only, where applicable, be avoided under Article 25(2).

22.3 *Loss or Delay in Mail to International Bureau*

Where the record copy was sent by the Receiving Office by mail to the International Bureau and it arrived after the expiration of the 13th month from the priority date, such Office shall, for the purposes of Rule 76, be considered an interested party.

22.4 *Transmittal of the Search Copy*

(a) The search copy shall be transmitted by the Receiving Office to the Searching Authority promptly after

receipt of the international application or, if a check to preserve national defense interests must be performed, as soon as the necessary clearance has been obtained. Even in the latter case, the search copy shall be transmitted at the latest on the same day as the record copy.

(b) The Receiving Office shall promptly notify the applicant of the date of transmittal of the search copy.

(c) The Receiving Office shall notify the International Bureau of the date of transmittal of the search copy when it transmits the record copy to the latter.

Observation: It is understood that any Contracting State whose domestic law provides for a check to preserve national defense interests before an application may be filed abroad may—and, in fact, will have to—fix such time limits for filing a request for authorization to file an international application as will enable it to grant the authorization in time to enable its national Office to hold the application at the disposal of the applicant, or to mail the application to the applicant, or to mail the application to the International Bureau, at the latest 15 days after the expiration of one year from the priority date.

RULE 23

Receipt of Record Copy by the International Bureau

23.1 *Recording of Date of Receipt of Record Copy*

The International Bureau shall, upon receipt, mark on the request sheet of the record copy the date of receipt and on all sheets of the application the stamp of the International Bureau.

23.2 *Notification of Receipt of Record Copy*

(a) Subject to the provisions of paragraph (b), the International Bureau shall promptly notify the applicant, the Receiving Office, the Searching Authority, and all designated States, of the fact and the date of receipt of the record copy.

(b) If the record copy is received after the expiration of the 13th month from the priority date, the International Bureau shall promptly notify the applicant, the Receiving Office, and the Searching Authority, accordingly.

(c) The notification sent to the applicant shall also contain the list of the designated States which have been notified and shall, in respect of each designated State, indicate any applicable time limit under Article 22.

RULE 24

Receipt of Search Copy by the Searching Authority

24.1 *Notification of Receipt of Search Copy*

If the Searching Authority is other than the Receiving Office, it shall promptly notify the International Bureau, the applicant, and the Receiving Office, of the fact and the date of receipt of the search copy.

24.2 *Lack of Receipt*

If the Searching Authority is other than the Receiving Office and the International Bureau has not received the notification referred to in Rule 24.1 within 10 days of the receipt of the record copy, it shall invite the Receiving Office, if it has not already done so, to send forthwith the search copy to the Searching Authority. If, after the expiration of one month from the notification referred to in Rule 23.2, the Searching Authority is not in possession of the search copy, the International Bureau shall prepare and send such copy to the Searching Authority and shall charge the expense involved to the Receiving Office.

RULE 25

Checking and Correcting Certain Elements of the Application

25.1 *Time Limit for Check*

The Receiving Office shall issue the invitation to correct provided for in Article 14(1)(b) as soon as possible, preferably within one month from the receipt of the application.

25.2 *Time Limit for Correction*

The time limit referred to in Article 14(1)(b) shall be reasonable under the circumstances of the particular case and shall be fixed in each case by the Receiving Office. It shall not be less than one month and normally not more than two months from the date of the invitation to correct.

25.3 *Replacement Sheets*

(a) If the correction is of such a nature that it prevents clear direct reproduction, the applicant shall be required to submit replacement sheets.

(b) The identity—subject to the part corrected—of the contents of any replacement sheet with the sheet it replaces shall be checked by the Receiving Office. The Receiving Office shall mark on each replacement sheet the date of receipt, the international application number, and the stamp identifying the Office. It shall keep a copy of the replacement sheet in its files.

(c) The Receiving Office shall promptly transmit any replacement sheet to the International Bureau, where it shall become part of the record copy. The replaced sheet of the record copy shall be kept in the files of the International Bureau.

(d) The Receiving Office shall promptly transmit a copy of any replacement sheet to the Searching Authority.

(e) The provisions of Rules 10 and 11 shall apply also to the replacement sheets.

25.4 *Correction of Certain Elements*

(a) The Receiving Office shall decide whether the applicant has submitted proposed corrections within the prescribed time limit, whether they are acceptable, and whether the application consequently should or should not be considered withdrawn.

(b) The Receiving Office shall mark on any proposed correction the date on which it received such correction.

25.5 *Delegation of Duty to Check*

(a) Any Receiving Office may agree with the Searching Authority competent for searching applications received by that Office that the check referred to in Article 14(1)(a) shall be carried out by the Searching Authority.

(b) Any invitation and decision issued under such an agreement shall have the same effect as if it had been issued by the Receiving Office.

RULE 26

Defects Noted by the International Bureau or the Searching Authority

26.1 *Note on Certain Defects*

(a) If, in the opinion of the International Bureau or of the Searching Authority, the international application contains certain defects, particularly that it does not comply with the prescribed physical requirements necessary for

reasonably uniform publication, the International Bureau or the Searching Authority, respectively, shall bring such defects to the attention of the Receiving Office.

(b) The Receiving Office shall, unless it disagrees with the said opinion, proceed as provided in Article 14(1) and Rule 25.

26.2 *Defects in Indications Concerning the Applicant or the Inventor*

If the Searching Authority discovers that the application does not contain the prescribed indications concerning the applicant and the inventor, it shall promptly notify the Receiving Office. The latter shall proceed as provided in Article 14(1) and Rule 25, and the Searching Authority shall proceed with the search unless and until it receives notification that the application is to be considered withdrawn.

RULE 27

Applications Considered Withdrawn Under Article 14(1), (4) or (5)

27.1 *Procedure*

If the Receiving Office decides, under Article 14(1) and Rule 25.4 [failure to correct certain defects], or under Article 14(4) [failure to pay the required fees under Rules 14 to 16], or under Article 14(5) [later finding of non-compliance with the requirements listed in items (i) to (iv) of Article 11(1)], that the application is considered withdrawn:

(i) the Receiving Office shall notwithstanding transmit the record copy (unless already transmitted) as provided in Rule 22.1, and 22.2;

(ii) the Receiving Office shall promptly notify both the applicant and the International Bureau of the said decision;

(iii) the Receiving Office shall not transmit a copy to the Searching Authority, or, if one has already been transmitted, it shall notify the Searching Authority of the said decision;

(iv) the International Bureau shall not be required to notify the applicant of the receipt of the record copy.

RULE 28

Copies Required Under Article 13

The preparation of copies required under Article 13 shall be the responsibility of the International Bureau.

RULE 29

Later Designations

29.1 *Designations Submitted Later than the International Application*

The designation of States not named in the international application shall be effected by a signed notice from the applicant to the International Bureau. The notice shall identify the international application.

29.2 *Identification of the International Application*

The international application shall be identified by its international filing date and number, and by the name of the Receiving Office with which it was filed.

29.3 *Form of Later Designation*

The later designation shall preferably be written on a printed form furnished free of charge to applicants. If it is not written on such a form, it shall preferably be worded as follows: "In relation to the international application filed with . . . on . . . under No. . . . , the undersigned designates the following additional State(s) under Article 4(2) of the Patent Cooperation Treaty: . . . ."

29.4 *Choice of Certain Kinds of Protection*

The provisions of Rule 5.12 shall apply, *mutatis mutandis*, in the case of later designations.

29.5 *Procedure*

(a) If the notice referred to in Rule 29.1 is received by the International Bureau after the expiration of 12 months from the priority date, the International Bureau shall notify the applicant that the designation sought is not acceptable.

(b) If the notice is received by the International Bureau before the expiration of 12 months from the priority date, the International Bureau shall record it and notify the applicant of the receipt of the notice and the date of receipt, and the designated Office of the designation and the date of receipt of the said notice.

RULE 30

Withdrawal of the International Application or of Designations

30.1 *Procedure*

(a) The applicant may withdraw the international application or the designation of any designated State prior to the communication of that application under Article 20.

(b) Withdrawal of the designation of all designated States shall be treated as withdrawal of the international application.

(c) Withdrawal shall be effected by a signed notice from the applicant to the International Bureau.

(d) The fact of the withdrawal, together with the date of receipt of the notice effecting withdrawal, shall be recorded by the International Bureau and promptly notified by it to the Receiving Office, the applicant, the national Offices affected by the withdrawal, and, where the withdrawal concerns the international application and the search report has not yet issued, the Searching Authority.

RULE 31

Relevant Prior Art for International Search

31.1 *Relevant Prior Art for International Search*

(a) For the purposes of Article 15(2), relevant prior art shall consist of everything which has been made available to the public anywhere in the world by means of written disclosure (including drawings and other illustrations) and which is capable of being of assistance in determining that the claimed invention is or is not new and that it does or does not involve an inventive step (i.e., that it is or is not obvious),[3] provided that the making available to the public occurred prior to the international filing date and, as far as international applications, national applications, or patents, published after that date, are concerned, provided that the priority date of each is earlier than the international filing date.

[3] The combination of these two criteria may be designated as "essential novelty."

(b) When the written disclosure refers to an oral disclosure, use, exhibition, or other means whereby the invention was made available to the public, and such making available to the public occurred on a date prior to the international filing date, the international search report shall separately mention that fact and the date on which it occurred if the making available to the public of the written disclosure occurred on a date posterior to the international filing date.

31.2 *Fields To Be Covered by Search*

(a) The international search shall cover all those technical fields, and shall be carried out on the basis of all those search files, which may contain material pertinent to the invention.

(b) Consequently, not only shall the art in which the invention is classifiable be searched but also analogous arts regardless of where classified.

(c) The question what arts are, in any given case, to be regarded as analogous shall be considered in the light of what appears to be the necessary essential function or use of the invention and not only the specific functions expressly indicated in the international application.

(d) The international search shall embrace all subject matter that is generally recognized as equivalent to the subject matter of the claimed invention for all or certain of its features, even though, in its specifics, the invention as described in the international application is different.

31.3 *Orientation of Search*

(a) Within the limits of Article 15(3), the international search shall be directed to the invention, both as described and claimed, with particular emphasis on the inventive concept towards which the claims are directed.

(b) In so far as possible and reasonable, the international search shall cover the entire subject matter to which the claims are directed or to which they might reasonably be expected to be directed after they have been amended.

RULE 32

Minimum Documentation

32.1 *Definition*

(a) The documentation referred to in Article 15(4) ("minimum documentation") shall consist of:

(i) the patents, inventors' certificates, and published patent applications, of the following States from the dates indicated in each case:

1. France, from 1920
2. Federal Republic of Germany, from 1920
3. Japan, from . . .[4]
4. Soviet Union, from . . .[4]
5. Switzerland, in French or German languages only, from [5]
6. United Kingdom, from 1920
7. United States, from 1920;

[4] *Observation:* Date to be determined later in the light of the availability of English-language abstracts.

[5] *Observation:* Date to be determined later in the light of general availability of copies in the search files.

(ii) all published international applications;

(iii) such other published items of non-patent literature as the Searching Authorities shall agree upon and which shall be published in a list by the International Bureau when agreed upon for the first time and whenever changed.

(b) It is understood that, for the purposes of paragraph (a)(i), patent applications which have only been laid open for public inspection are not considered published applications.

RULE 33

Competent Searching Authority

33.1 *When Only One Searching Authority Is Competent*

Each Receiving Office shall inform the International Bureau which Searching Authority is competent for the searching of the international applications filed with it, and the International Bureau shall promptly publish such information.

33.2 *When Several Searching Authorities Are Competent*

(a) Any Receiving Office may specify several Searching Authorities:

(i) by declaring all of them competent for any application filed with it, and leaving the choice to the applicant, or

(ii) by declaring one or more competent for certain kinds of applications filed with it, and declaring one or more others competent for other kinds of applications filed with it, provided that, for those kinds of applications for which several Searching Authorities are declared to be competent, the choice shall be left to the applicant.

(b) Any Receiving Office availing itself of the faculty described in paragraph (a) shall promptly inform the International Bureau, and the International Bureau shall promptly publish such information.

RULE 34

Minimum Requirements for Searching Authorities

34.1 *Definition of Minimum Requirements*

The minimum requirements referred to in Article 16(3)(c) shall be the following:

(i) the administration must have at least 150 full-time employees with sufficient technical qualifications to carry out searches;

(ii) the administration must have in its possession at least the minimum documentation referred to in Rule 32, properly arranged for search purposes;

(iii) the administration must have a staff which is capable of searching in all technical fields and which has the language facilities to understand at least those languages in which the minimum documentation referred to in Rule 32 is written.

RULE 35

Preparatory Committee Under Article 16(4)(a)

35.1 *Composition of Preparatory Committee*

(a) During the first five years after the entry into force of the Treaty according to Article 58, the preparatory committee referred to in Article 16(4)(a) shall consist of representatives of Contracting States in whose national Offices, according to the latest available yearly statistics, the highest number of applications for patents or inventors' certificates were filed.

(b) Thereafter, the said committee shall consist of representatives of Contracting States in whose national Offices, according to the latest available yearly statistics, the highest number of international applications were filed.

35.2 *Procedure*

(a) The preparatory committee shall be convened by the Director General at least two months before the relevant session of the Assembly.

(b) The preparatory committee shall adopt its own rules of procedure.

RULE 36

Defects in Certain Elements of the Application

36.1 *Lack of Title or Abstract*

If the search copy does not contain a title or an abstract, the Searching Authority shall promptly notify the Receiving Office. The latter shall proceed as provided under Rule 25, and the Searching Authority shall proceed with the search unless and until it receives notification that the application is to be considered withdrawn.

36.2 *Incorrect Title*

(a) The Searching Authority shall check whether the title of the invention complies with Rule 5.3. If it finds that it does not, the Searching Authority shall invite the applicant to modify the title in a certain specified way.

(b) If, within one month from the date of the invitation referred to in paragraph (a), the applicant notifies his disagreement to the Searching Authority, both the title suggested by the latter and the title submitted by the applicant shall henceforth appear on the application, together with an indication of the source of each title.

36.3 *Incorrect Abstract*

(a) The Searching Authority shall check whether the abstract complies with Rule 9. If it finds that it does not, it shall correct the abstract and shall communicate the corrected version to the applicant, inviting him to comment within one month from the date of the invitation.

(b) The definitive contents of the abstracts shall be determined by the Searching Authority.

RULE 37

Lack of Unity of Invention (Search)

37.1 *Invitation To Restrict, Divide, or Pay*

(a) The invitation to restrict the claims or to divide the application provided for in Article 17(3)(a) shall specify at least one possibility of restriction or division which, in the opinion of the Searching Authority, would be in compliance with the applicable requirements.

(b) The invitation to pay additional search fees provided for in Article 17(3)(a) shall specify the amount to be paid and the reasons therefor.

37.2 *Additional Search Fees*

(a) The amount of the additional fee due for searching under Article 17(3)(a) shall be determined in the agreement between the International Bureau and the International Patent Institute in cases where the latter is the competent Searching Authority and where the applicant is a national of a State not member of the International Patent Institute; otherwise, the amount shall be determined, where applicable, by the national Office which is the Searching Authority or by the said Institute, as the case may be.

(b) Any additional fee due for searching under Article 17(3)(a) shall be payable direct to the Searching Authority.

37.3 *Time Limit*

The time limit provided for in Article 17(3)(b) shall be fixed, in each case, according to the circumstances of the case, by the Searching Authority; it shall not be shorter than one month, and it shall not be longer than two months, from the date of the invitation.

37.4 *Procedure in the Case of Restrictions of the Claims*

If the applicant restricts the claims but not sufficiently to comply with the requirement of unity of invention, the Searching Authority shall proceed as provided in Article 17(3)(b).

37.5 *Procedure in the Case of Dividing the Application*

(a) If the applicant chooses to divide the application, neither the description nor the drawings may be modified. They will remain the same for the parent application (that is, the international application as restricted) and the divisional applications.

(b) For the parent application, the applicant shall be required to specify the claims maintained or to file restricted claims, and to submit a new abstract when necessary.

(c) For each divisional application, the applicant shall be required to file a request, a claim or claims, and an abstract. The Receiving Office shall, itself, attach to those papers a copy of the application in its original form, and the description and drawings (if any) thereof shall also be the description and drawings of each divisional application. The request of each divisional application shall identify the original application by its international application number and, where less than the totality of the description is relevant for the divisional application, a separate statement, submitted at the same time as the request, shall identify those portions of the description which are relevant.

(d) Each divisional application shall be treated as a new, independent international application, except that:

(i) the date of actual receipt of any divisional application by the Receiving Office shall be certified by that Office on the record copy and on the search copy of such application;

(ii) the international filing date of the original application shall also be the international filing date of the divisional application, provided that the latter was filed with the Receiving Office within the time limit fixed in Rule 37.3, and to the extent that it contains no new matter.

(e) If the parent application or any divisional application does not comply with the requirement of unity of invention, the Searching Authority shall proceed as provided in Article 17(3)(b).

37.6 *Main Invention*

In case of doubt which invention is the main invention for the purposes of Article 17(3)(b), the invention first mentioned in the claims shall be considered the main invention.

37.7 *Voluntary Division*

(a) Subject to Rule 62.4, the applicant may divide the application on his own initiative any time before the expiration of the 16th month from the priority date. If the division takes place after the search report has been established, the communication of the search report and any publication thereof shall state that fact.

(b) The procedure provided for in Rule 37.5 shall apply also in the case of voluntary division.

RULE 38

Time Limit for Search

38.1 *Time Limit for Search*

All agreements concluded with Searching Authorities shall provide for the same time limit for the producing of the search report. Generally, this time limit shall not exceed three months from the receipt of the search copy by the Searching Authority.

RULE 39

The International Search Report

39.1 *Identifications*

The search report shall identify the Searching Authority which established it by indicating the name of such Authority, and the international application by indicating the international application number, the name of the applicant, and the international filing date.

39.2. *Dates*

The search report shall indicate the date on which the search was completed, and the date of the search report, which shall be the date on which the report was transmitted to the applicant and the International Bureau.

39.3. *Classification*

(a) The search report shall contain the classification of the subject matter a least according to the International Patent Classification.

(b) Such classification shall be effected by the Searching Authority.

39.4 *Language*

The search report shall be in the language in which the international application to which it relates is published.

39.5 *Citations*

(a) The search report shall contain the citations of the documents considered to be relevant.

(b) The method of identifying any cited document shall be regulated by the Administrative Instructions.

(c) Citations which are not relevant to all the claims shall be cited in relation to the claim or claims to which they are relevant.

(d) If only certain passages of the cited document are relevant, they shall be identified, for example, by indicating the page, the column, or the lines, where the passage appears.

39.6 *Fields Searched*

(a) The search report shall list the classification identification of the fields searched. If that identification is effected on the basis of a classification other than the International Patent Classification, the Searching Authority shall publish the classification used.

(b) If the search extended to patents, inventors' certificates or published patent applications of countries, periods, or languages, not included in the minimum documentation as defined in Rule 32, the search report shall identify such countries, periods, or languages.

39.7 *Remarks Concerning Unity of Invention*

If the applicant paid additional fees for the search, or if the application or the search was restricted under Article 17(3), the search report shall so indicate.

39.8 *Special Mention of Certain Citations*

The search report shall specially mention any published international or national application or national patent whose publication date is later but whose priority date is earlier than the international filing date and shall, again, specially mention any written disclosure published between the priority date and the international filing date.

39.9 *Signature*

The search report shall be signed by an authorized officer of the Searching Authority.

39.10 *No Other Matter*

The search report shall contain no matter other than that enumerated in Rule 39.1, 2, 3, 5, 6, 7, 8 and 9. In particular, it shall contain no expressions of opinion, reasoning, arguments, or explanations.

39.11 *Form*

The physical requirements as to the form of the search report shall be prescribed by the Administrative Instructions.

RULE 40

Transmittal of the Search Report

40.1 *Copies of Report*

(a) The Searching Authority shall, on the same day, transmit one copy of the search report to the International Bureau and one copy to the applicant.

(b) It shall annex to the search report any relevant information in connection with Rule 37.

40.2 *Title and Abstract*

(a) If, at the time the search is completed, the time limit allowed for the applicant to comment on any suggestion of the Searching Authority in respect of the title or the abstract has not expired, the search report shall indicate that it is incomplete as to one or both of these elements.

(b) As soon as the time limit referred to in paragraph (a) has expired, the Searching Authority shall notify the title or abstract approved or established by it to the International Bureau and to the applicant.

RULE 41

Translation of the Search Report

41.1 *Languages*

Any designated State may require that search reports established in any language other than the official language, or one of the official languages, of its national Office be translated into English, French, German, Japanese, or Russian.

RULE 42

Amendment of Claims Before the International Bureau

42.1 *Time Limit*

The time limit referred to in Article 19 shall be two months from the date of transmittal of the search report to the International Bureau and to the applicant by the Searching Authority.

RULE 43

Communication to Designated Offices

43.1 *Time Limit*

The communication provided for in Article 20, together with the translation of the search report (as required), shall be effected promptly after the International Bureau has received amended claims from the applicant, or a declaration that the applicant does not wish to amend the claims before the International Bureau, or, in any case, when the time limit provided for in Rule 42.1 has expired.

43.2 *Copies*

(a) The copies required for communication shall be prepared by the International Bureau.

(b) They shall be on sheets of A4 size.

(c) At the request of the designated Office, all copies communicated to it shall consist of sheets only one side of which is used, and shall be of a quality permitting further high-quality reproduction.

43.3 *Information of Applicant*

The International Bureau shall send a notice to the applicant indicating the national Offices to which the communication provided for in Article 20 has been effected and the date of such communication. Such notice shall be sent on the same day as the communication.

RULE 44

Publication of the International Application and the Search Report

44.1 *Form*

(a) The international application shall be published in the form of a pamphlet.

(b) Subject to paragraphs (c) and (d) and to Rule 44.3(b), the pamphlet shall be reproduced direct from the record copy.

(c) The front page shall be composed by the International Bureau.

(d) In exceptional circumstances, particularly if the amended claims are submitted just before the due date of the publication and in a form not complying with the prescribed physical requirements, sheets may be reproduced from sheets composed by the International Bureau.

(e) Other particulars regarding the form of the pamphlets and the method of reproduction shall be governed by the Administrative Instructions.

44.2 *Contents*

(a) The pamphlet shall contain:

(i) a front page,
(ii) the description,
(iii) the claims,
(iv) the drawings, if any,
(v) the search report.

(b) The front page shall include:

(i) data taken from the request sheet and such other data as are prescribed by the Administrative Instructions,
(ii) a drawing or formula,
(iii) the abstract.

(c) The drawing or formula referred to in paragraph (b)(ii) shall be selected from among those contained in the application, preferably following the suggestion made by the applicant under Rule 9.2(a). Its reproduction on the front page may be in a reduced form.

(d) The abstract referred to in paragraph (b)(iii) and, where applicable, its translation as provided for in Rule 44.3(c) may, if there is not enough room on the front page for the totality of the abstract (in one or two languages), appear in part on the back of the front page.

(e) If the claims have been amended under Article 19, both the amended and the original claims shall be included. The original claims shall be clearly separated and designated as such. The date of receipt of the amended claims by the International Bureau shall be indicated.

(f) If, at the time when publication is due, the search report is not yet available, the pamphlet shall, in the place of the search report, contain an indication to the effect that the search report was not available and that the pamphlet will be republished when it becomes available. As soon as the search report becomes available, the pamphlet shall be republished, including this time the search report and a reference to the fact and date of the earlier publication.

(g) If, at the time when publication is due, the time limit for amending the claims under Article 19 has not expired, the pamphlet shall, in relation to the claims, refer to that fact and indicate that should the claims be amended under Article 19 the pamphlet will be republished after the claims have been amended. As soon as the claims are amended under Article 19, the pamphlet shall be republished, including this time both the amended and the original claims and a reference to the fact and date of the earlier publication.

44.3 *Language*

(a) If the international application is filed in English, French, German, Japanese, or Russian, it shall be published in the language in which it was filed.

(b) If the international application is filed in a language other than English, French, German, Japanese, or Russian, it shall be published in English translation. The translation shall be prepared under the responsibility of the Searching Authority, which shall be obliged to prepare it in time to permit international publication by the due date.

(c) If the international application is published in a language other than English, the search report and the abstract shall be published both in that language and in English. The translations shall be prepared under the responsibility of the International Bureau.

RULE 45

Faculty Under Article 22 in Respect of Copies, Translations, and Fees

45.1 *Exercise of Faculty*

(a) Any Contracting State wishing to avail itself of

the faculty provided for in Article 22 shall, where applicable, notify the International Bureau of:

(i) the languages from which and the language into which it requires translation,
(ii) the amount of the national fee,
(iii) the time limit within which the copy of the international application must be furnished,
(iv) the time limit within which the translation must be furnished,
(v) the time limit within which the national fee must be paid.

(b) The language into which translation may be required must be an official language of the designated Office. If there are several of such languages, no translation may be required if the international application is in one of them. If there are several official languages and a translation must be furnished, the applicant may choose any of those languages.

(c) The time limit shall be computed from the priority date of the international application or from the date of the communication of the international application under Article 20. In the former case, the time limit shall not be shorter than 20 months. In the latter case, the time limit should be at least two months from the date of the said communication and if the time limit, in respect of any given international application, would expire prior to the expiration of the 20th month from the priority date, it shall expire upon the expiration of that month.

(d) Any of the requirements under paragraph (a) may later be changed—within the limits permitted under Article 22—or withdrawn by means of a notification addressed by the Contracting State to the International Bureau.

45.2 *Publication and Effect*

(a) Any notification received by the International Bureau under Rule 45.1(a) or (d) shall be promptly published by the International Bureau in the Gazette.

(b) Notifications under Rule 45.1(a), and notifications under Rule 45.1(d) shortening the previously fixed time limit, shall be effective in relation to international applications filed after the expiration of three months computed from the date on which the notification was published by the International Bureau, or, when the notification under Rule 45.1(a) is effected prior to the State's becoming party to the Treaty, that notification shall become effective on the same day as that on which the said State becomes party to the Treaty.

(c) Notifications under Rule 45.1(d) lengthening the previously fixed time limit, and notifications withdrawing any requirement, shall become effective upon publication by the International Bureau in the Gazette in respect of international applications pending at the time or filed after the date of such publication, or, if the Contracting State effecting the notification fixes some later date, as from the latter date.

RULE 46

Review by Designated Offices

46.1 *Time Limit for International Bureau*

The time limit referred to in Article 25(1) shall be two months computed from the date of the notification sent to the applicant under Article 17(2) that no search report will be established or from the date of the notifications sent to him under Rules 23.2(b) or 27.1 informing him that the international application is considered withdrawn, or, in the case of Article 17(3)(b), from the date of the transmittal under Article 18(2) of the search report of the applicant.

46.2 *Time Limit for Designated Offices*

The time limit referred to in Article 25(2) shall expire at the same time as the time limit prescribed in Rule 46.1.

RULE 47

Amendment of the Claims Before the Designated Offices [6]

47.1 *Time Limit*

(a) Subject to the provisions of paragraph (b), the right of amending claims before any designated Office (Article 28) may be exercised by the applicant within two months computed from the date of the communication of the application under Article 20 or at any later time if so permitted by the domestic law of the State of that Office.

(b) Any designated Office may, once it has started to process and examine the international application, offer to the applicant the possibility of amending claims. In such case, the time limit for responding to such offer shall be governed by the domestic law applicable before the said Office.

(c) No designated Office shall grant a patent or refuse the grant of a patent before the time limit applicable under paragraph (a) or (b) has expired.

[6] It appears that there is at least one country in which the domestic law requires that each invention be the subject of *one* claim. In other words, any given invention cannot be the subject of several claims. This does not mean that the application must relate to one invention only. It may relate to several inventions, provided the requirement of unity of invention is complied with. But it does mean that the number of inventions and the number of the claims in any given application must be the same. For example, in all those admittedly frequent cases where the application relates to one invention, the application may contain only one claim.

The difficulties which such a requirement could cause in connection with the proposed manner of claiming in the PCT draft are under study.

PART C.—RULES CONCERNING CHAPTER II OF THE TREATY

RULE 48

The Demand

48.1 *Form*

(a) The demand shall be written on a printed form.

(b) Copies of printed forms shall be furnished free of charge by the Receiving Offices to the applicants.

(c) The particulars of the forms shall be prescribed by the Administrative Instructions.

(d) The demand shall be submitted in two identical copies.

48.2 *Contents*

(a) The demand shall contain:

(i) a petition,
(ii) indications concerning the applicant and the agent if there is an agent,
(iii) indications concerning the international application to which it relates,
(iv) election of States.

(b) The demand shall be signed.

(c) The demand may designate an agent.

48.3 *Petition*

The petition shall be worded as follows: "Demand under Article 31 of the Patent Cooperation Treaty: The undersigned requests that the international application specified below be the subject of international preliminary examination according to the Patent Cooperation Treaty."

48.4 *Applicant*

As to the indications concerning the applicant, Rules 5.4 and 5.5 shall apply *mutatis mutandis.*

48.5 *Agent*

(a) Subject to the provisions of paragraph (b), if an agent is designated, Rules 5.4, 5.7, and 5.8 shall apply *mutatis mutandis.*

(b) If the agent is not the same as the agent designated in the international application, all papers sent to the former and all papers received from the former shall be considered as if they had been sent to or received from the latter also.

48.6 *International Application*

The international application shall be identified by the name of the Receiving Office with which the international application was filed, the date of the international filing, the name and address of the applicant, the title of the invention, and, where the international application number is known to the applicant, that number.

48.7 *Election of States*

(a) The demand shall name, among the designated States, at least one Contracting State bound by Chapter II of the Treaty as elected State.

(b) If the demand does not name any such State, the demand shall be treated as if all designated States bound by Chapter II of the Treaty had been named in the demand.

(c) If there is no State bound by Chapter II of the Treaty among the designated States, the demand shall be treated as if it had not been made.

48.8 *Signature*

The demand shall be signed by the applicant.

RULE 49

The Applicant Entitled to Make a Demand

49.1 *Reference*

The provisions of Rule 18 shall apply, *mutatis mutandis,* also in connection with the application of Article 31(2).

RULE 50

Languages (Preliminary Examining Authority)

50.1 *Demand*

The demand shall be in the language of the international application or, when a translation is required under Rule 50.2, in the language of that translation.

50.2 *International Application*

(a) If the Preliminary Examining Authority is not part of the same administration as the Searching Authority, and if the international application is in a language other than the language, or one of the languages, specified in the agreement concluded between the International Bureau and the Preliminary Examining Authority competent for the international preliminary examination, the latter may require that the applicant submit a translation of the application.

(b) The translation shall be submitted not later than the later of the following two dates:

(i) the date on which the time limit under Rule 42.1 expires,
(ii) the date on which the demand is submitted.

(c) The translation shall contain a statement that, to the best of the applicant's knowledge, it is complete and faithful. This statement shall be signed by the applicant.

RULE 51

Later Elections

51.1 *Elections Submitted Later Than the Demand*

The election of States not named in the demand shall be effected by a notice signed and submitted by the applicant, and shall identify the international application and the demand.

51.2 *Identification of the Application*

The international application shall be identified by its international filing date and number, and by the name of the Receiving Office with which it was filed.

51.3 *Identification of the Demand*

The demand shall be identified by the date on which it was submitted and by the name of the Preliminary Examining Authority to which it was submitted.

51.4 *Form of Later Elections*

The later election shall preferably be written on a printed form furnished free of charge to applicants. If it is not written on such a form, it shall preferably be worded as follows: "In relation to the international application filed with . . . on . . . under No. . . . (and the demand for international preliminary examination submitted on . . . to . . .), the undersigned elects the following additional States(s) under Article 31 of the Patent Cooperation Treaty: . . . ."

RULE 52

Handling Fee

52.1 *Requirement To Pay*

Each demand for international preliminary examination shall be subject to the payment of a fee for the benefit of the International Bureau ("handling fee").

52.2 *Amount*

The amount of the handling fee shall be . . . .

52.3 *Mode and Time of Payment*

(a) The handling fee shall be collected by the Preliminary Examining Authority to which the demand is submitted.

(b) The handling fee shall be due at the time the demand is submitted.

(c) The handling fee shall be payable in the currency prescribed by the Preliminary Examining Authority to

which the demand is submitted, it being understood that, when transferred by that administration to the International Bureau, it shall be freely convertible into Swiss currency.

52.4 *Failure To Pay*

(a) Where the handling fee is not paid as required by the present Rule, the Preliminary Examining Authority shall invite the applicant to pay the fee within one month from the date of the invitation.

(b) If the applicant complies with the invitation within the prescribed time limit, the demand shall be considered as if it had been received on the date on which the Preliminary Examining Authority receives the fee, unless, under Rule 55.1(b), a later date is applicable.

(c) If the applicant does not comply with the invitation within the prescribed time limit, the demand shall be considered as if it had not been submitted.

52.5 *Refund*

In no case shall the handling fee be refunded.

RULE 53

Preliminary Examination Fee

53.1 *Where the Preliminary Examining Authority Is the International Patent Institute*

(a) Where the competent Preliminary Examining Authority is the International Patent Institute and the applicant is a national of a State which is a member of that Institute, the said Institute may require that the applicant pay a fee for its own benefit for carrying out the international preliminary examination and for performing all other tasks entrusted to Preliminary Examining Authorities by the Treaty and these Regulations.

(b) Where the competent Preliminary Examining Authority is the International Patent Institute and the applicant is a national of a State which is not a member of the Institute, the demand shall be subject to the payment of a fee for the benefit of the Institute for carrying out the international preliminary examination and for performing all other tasks entrusted to Preliminary Examining Authorities by the Treaty and these Regulations. The amount of the fee shall be fixed in an agreement between the International Bureau and the Institute. The fee shall be collected by the Institute and shall be due at the same time and under the same conditions as the handling fee (see Rule 52), except that it shall be payable in a currency which is freely convertible into Netherlands currency. The agreement shall also fix the conditions and extent of refund in cases where the demand is withdrawn before the preliminary examination has been completed, and possibly in other cases. The relevant portions of the agreement referred to in this paragraph shall be promptly published by the International Bureau.

53.2 *Where the Preliminary Examining Authority Is a National Office*

Where the competent Preliminary Examining Authority is a national Office, such Office may require that the applicant pay a fee for its own benefit for carrying out the international preliminary examination and for performing all other tasks entrusted to Preliminary Examining Authorities by the Treaty and these Regulations.

RULE 54

Competent Preliminary Examining Authority

54.1 *Information*

Each Contracting State bound by the provisions of Chapter II shall inform the International Bureau which Preliminary Examining Authority is competent for the preliminary examination of international applications filed with its national Office, and the International Bureau shall promptly publish such information.

RULE 55

Certain Defects in the Demand or Elections

55.1 *Defects in the Demand*

(a) If the demand does not comply with the requirements specified in Rule 48 other than Rule 48.7, the Preliminary Examining Authority shall invite the applicant to correct the defects within one month from the date of the invitation.

(b) If the applicant complies with the invitation within the prescribed time limit, the demand shall be considered as if it had been received on the date on which the Preliminary Examining Authority receives the correction or, when the handling fee is received under Rule 52.4(b) at a later date, on that date.

(c) If the applicant does not comply with the invitation within the prescribed time limit, the demand shall be considered as if it had not been submitted.

(d) If the defect is noticed by the International Bureau, it shall bring the defect to the attention of the Preliminary Examining Authority, which shall then proceed as provided in paragraphs (a) to (c).

55.2 *Defects in Later Elections*

(a) If the later election does not comply with the requirements of Rule 51, the International Bureau shall invite the applicant to correct the defects within one month from the date of the invitation.

(b) If the applicant complies with the invitation within the prescribed time limit, the later election shall be considered as if it had been received on the date on which the International Bureau receives the correction.

(c) If the applicant does not comply with the invitation within the prescribed time limit, the later election shall be considered as if it had not been submitted.

55.3 *Attempted Elections*

(a) If the applicant has attempted to elect a State which is not a designated State, the International Bureau shall bring this fact to the attention of the applicant and, if the priority year has not yet expired, invite the applicant to designate that State.

(b) If the applicant complies with the invitation within the priority year, the election shall be considered as if it had been made on the date on which the notice provided for in Rule 29 is received by the International Bureau.

(c) If the attempt to elect was made after the expiration of the priority year, or if the attempted election is not validated as provided for in paragraph (b), the International Bureau shall notify the applicant that the attempted election is not acceptable.

(d) If the applicant has attempted to elect a designated State which is not bound by Chapter II, the attempted election shall be considered as if it had not been made, and the International Bureau shall notify the applicant accordingly.

RULE 56

Notification of Demand and Elections

56.1 *Notifications to the International Bureau, the Applicant, and the Preliminary Examining Authority*

(a) The Preliminary Examining Authority shall indicate on both copies of the demand the actual date of receipt or, where applicable, the date referred to in Rules 52.4(b) or 55.1(b). The Preliminary Examining Authority shall promptly send the original copy to the International Bureau. It shall keep the other copy in its files.

(b) The Preliminary Examining Authority shall promptly inform the applicant in writing of the date of receipt of the demand.

(c) The International Bureau shall promptly notify the Preliminary Examining Authority and the applicant of the receipt, and the date of receipt, of any later election. That date shall be the actual date of receipt by the International Bureau or, where applicable, the date referred to in Rule 55.2(b).

56.2 *Notifications to the Elected Offices*

(a) The notification provided for in Article 31(7) shall be effected by the International Bureau.

(b) The notification shall indicate the number and filing date of the international application, the name of the applicant, the date of the national application whose priority is claimed (where priority is claimed), the date of receipt by the Preliminary Examining Authority of the demand, and—in the case of later elections—the date of receipt by the International Bureau of the later election.

(c) The notification shall be sent to the elected Office promptly after the expiration of the 18th month from the priority date, or, if the preliminary examination report is communicated earlier, then, at the same time as the communication of that report. Elections effected after such notification shall be notified promptly after they have been effected.

56.3 *Information for Applicant*

The International Bureau shall inform the applicant in writing that it has effected the notification referred to in Rule 56.2. At the same time, it shall indicate to him, in respect of each elected State, any applicable time limit under Articles 39 and 40(2).

RULE 57

Copy For Preliminary Examining Authority

57.1 *International Application*

(a) Where the Preliminary Examining Authority is part of the same administration as the Searching Authority, the same file shall serve the purposes of international search and international preliminary examination.

(b) Where the international search was performed by an administration other than the competent Preliminary Examining Authority, the International Bureau shall, promptly upon receipt of the search report or, if the demand was received after the search report, promptly upon receipt of the demand, send a copy of the international application and the search report to the Preliminary Examining Authority.

57.2 *Amended Claims*

(a) Any amendment filed under Article 19 shall be promptly transmitted by the International Bureau to the Preliminary Examining Authority.

(b) If the time limit for filing amendments under Article 19 (see Rule 42.1) has expired without the applicant having filed amendments under that Article, the International Bureau shall notify the Preliminary Examining Authority accordingly.

RULE 58

Minimum Requirements For Preliminary Examining Authorities

58.1 *Definition of Minimum Requirements*

The minimum requirements referred to in Article 16(3)(c), as applied under Article 32(2), shall be the following:

(i) the administration must have at least 150 full-time employees with sufficient technical qualifications to carry out examinations;

(ii) the administration must have in its possession at least the minimum documentation referred to in Rule 32, properly arranged for examination purposes;

(iii) the administration must have a staff which is capable of examining in all technical fields and which has the language facilities to understand at least those languages in which the minimum documentation referred to in Rule 32 is written.

RULE 59

Prior Art for Preliminary Examination

59.1 *Prior Art*

(a) For the purposes of Article 33(2) and (3), everything made available to the public anywhere in the world by means of written disclosure (including drawings and other illustrations) prior to the validly claimed priority date of the international application shall, subject to the provisions of paragraph (b), be considered prior art.

(b) Any international application published as such by the International Bureau shall be considered prior art even if the making available to the public of that application occurred after the validly claimed priority date of the international application under preliminary examination, provided that the validly claimed priority date of the said published international application is earlier than the priority date of the international application under preliminary examination.

59.2 *Oral Disclosures*

In cases where the making available to the public occurred by means of an oral disclosure before the validly claimed priority date of the international application under preliminary examination and the date of that oral disclosure is indicated in a written disclosure which has been made available to the public after the said priority date, the oral disclosure shall not be considered part of the prior art for the purposes of Article 33(2) and (3). Nevertheless, the preliminary examination report shall call attention to such oral disclosure as provided for in Rule 65.10.

RULE 60

Inventive Step or Non-Obviousness

60.1 *Approach to Prior Art*

For the purposes of Article 33(3), the preliminary examination shall take into consideration the relation of

any particular claim to the prior art as a whole. Consequently, it shall take into consideration the claim's relation not only to individual documents or features taken separately but also its relation to combinations of individual documents or features where such combinations are obvious to a person skilled in the art.

RULE 61

Procedure Before the Preliminary Examining Authority

61.1 *Basis of the Preliminary Examination*

The preliminary examination shall initially be directed to the claims as contained in the international application at the time the preliminary examination starts or, if, for the purposes of the said examination, the applicant has submitted different claims to the Preliminary Examining Authority before the examination starts, to such claims.

61.2 *Written Opinion of the Preliminary Examining Authority*

(a) In any of the following cases, that is to say:

(i) if, in the opinion of the Preliminary Examining Authority, the application has any of the defects described in Article 34(4),

(ii) if, in the course of the preliminary examination, the Preliminary Examining Authority happens to notice anything that, in the opinion of the said Authority, is a defect in the request or a failure to comply with any of the prescribed physical requirements,

(iii) if, in the opinion of the Preliminary Examining Authority, the preliminary examination report should be negative in respect of any of the claims because the invention claimed therein does not appear to be novel, does not seem to involve an inventive step (does not appear to be non-obvious), or does not appear to be industrially applicable,

the said Authority shall notify the applicant accordingly in writing.

(b) The notification shall fully state the reasons for the opinion of the Preliminary Examining Authority.

(c) The notification shall invite the applicant to submit a written reply together, where appropriate, with amendments or corrections.

(d) The notification shall fix a time limit for the reply. The time limit shall be reasonable under the circumstances. It shall normally be two months after the date of notification. In no case shall it be shorter than one month after the said date. It shall be at least two months after the said date where the search report is communicated at the same time as the notification. In no case shall it be more than three months after the said date.

61.3 *Formal Response to the Preliminary Examining Authority*

(a) The applicant may respond to the invitation of the Preliminary Examining Authority by amending the claims and/or the description, by correcting the defect in the request, by complying with the prescribed physical requirements, and/or—if he disagrees with the opinion of that Authority—by submitting arguments, as the case may be.

(b) Any response shall be submitted directly to the Preliminary Examining Authority.

61.4 *Amendment*

(a) Any change in the claims or the description, including cancellation of claims or omission of passages in the description, shall be considered amendment.

(b) No new matter may be added through amendment.

(c) If, in the opinion of the Preliminary Examining Authority, the amendment would entail addition of new matter, the statement under Article 35(2) shall be made as if that part of the amendment which would entail addition of new matter had not been proposed by the applicant, and this circumstance shall be indicated in the report.

61.5 *Second Opportunity for Communications*

On special request of the applicant, the Preliminary Examining Authority may give him a second opportunity to amend the claims or the description before the said Authority, or to present counter-arguments, or to do both.

61.6 *Informal Communications With the Applicant*

The Preliminary Examining Authority may, at any time, communicate informally, over the telephone, in writing, or through personal interviews, with the applicant. The said Authority shall, at its discretion, decide whether it wishes to grant more than one personal interview if so requested by the applicant, or whether it wishes to reply to any informal written communication from the applicant.

61.7 *Priority Document*

(a) If the Preliminary Examining Authority needs a copy of the application whose priority is invoked in the international application, the International Bureau shall, on request, promptly furnish such copy.

(b) If the application is in a language other than the language or one of the languages of the Preliminary Examining Authority, the applicant shall furnish, on invitation, a translation in the said language or one of the said languages. Such translation shall be furnished not later than by the expiration of two months from the date of the invitation. If it is not furnished within this time limit, the preliminary examination report shall be established as if the priority had not been claimed.

61.8 *Replacement Sheets*

The provisions of Rule 25.3 shall apply, *mutatis mutandis,* also before the Preliminary Examining Authority.

RULE 62

Lack of Unity of Invention (Preliminary Examination)

62.1 *No Invitation To Restrict or Divide*

Where the Preliminary Examining Authority finds that the requirement of unity of invention is not complied with and chooses not to invite the applicant to restrict the claims or to divide the application, it shall establish the preliminary examination report, subject to Article 34(4)(b), in respect of the entire application, but shall indicate, in the said report, that, in its opinion, the requirement of unity of invention is not fulfilled and shall briefly indicate the reasons for this opinion.

62.2 *Invitation To Restrict or Divide*

Where the Preliminary Examining Authority finds that the requirement of unity of invention is not complied with and chooses to invite the applicant, at the latter's option, to restrict the claims or to divide the application, it shall specify at least one possibility of restriction or division which, in the opinion of the Preliminary Examining Authority, would be in compliance with the applicable requirement. It shall, at the same time, fix a time limit, with regard to the circumstances of the case, for complying with the invitation; such time limit shall not be shorter than one month, and it shall not be longer than two months, from the date of the invitation.

62.3 *Procedure in the Case of Division*

If the applicant chooses to divide the application, the procedure provided for in Rule 37.5 shall apply with the exception of paragraph (e) of that Rule.

62.4 *Voluntary Division*

(a) The applicant may divide the international application on his own initiative any time prior to the beginning of the preliminary examination but in no case after the expiration of the 16th month from the priority date.

(b) The procedure provided for in Rule 37.5, except paragraph (e) of that Rule, shall apply also in the case of voluntary division effected under paragraph (a).

RULE 63

Purview of the Treaty

63.1 *Reference*

For the purposes of Article 34(4)(a)(i), the provisions of Rules 3.1, 3.2, and 3.3 shall govern in determining what subject is outside the purview of the Treaty.

RULE 64

Time Limit for Preliminary Examination

64.1 *Time Limit for Preliminary Examination*

(a) All agreements concluded with Preliminary Examining Authorities shall provide for the same time limit for the establishment of the preliminary examination report. Generally, this time limit shall not exceed:

(i) 6 months after the starting of the preliminary examination,

(ii) in cases where the Preliminary Examining Authority issues an invitation to restrict the claims or divide the application (Article 34(3)), 8 months after the starting of the preliminary examination.

(b) Preliminary examination shall start upon receipt, by the Preliminary Examining Authority:

(i) under Rule 57.2(a), of the claims as amended under Article 19, or

(ii) under Rule 57.2(b), of a notice from the International Bureau that no amendments under Article 19 have been filed within the prescribed time limit, or

(iii) of a notice, after the search report is in the possession of the Preliminary Examining Authority, from the applicant expressing the wish that the preliminary examination should start and be directed to the claims as specified in such notice.

(c) If the Preliminary Examining Authority is part of the same administration as the Searching Authority, the preliminary examination may, if the Preliminary Examining Authority so wishes, start at the same time as the search. In such a case, the preliminary examination report shall be established, notwithstanding the provisions of paragraph (a), no later than six months after the expiration of the time limit allowed under Article 19 for amending the claims.

RULE 65

The Preliminary Examination Report

65.1 *Definition*

For the purposes of this Rule, "report" shall mean international preliminary examination report.

65.2 *Basis of Report*

(a) If the claims have been amended in the course of the preliminary examination procedure, the report shall issue, subject to Rule 61.4(c), on the claims as amended.

(b) If, pursuant to Rule 61.7, the report is established as if the priority had not been claimed, the report shall so indicate.

65.3 *Identifications*

(a) The report shall identify the Preliminary Examining Authority which established it by indicating the name of such Authority, and the international application by indicating the international application number, the name of the applicant, and the international filing date.

(b) If the claims or the description of the international application were amended or any other part of the international application was corrected before the Preliminary Examining Authority, a clean copy (including the required replacement sheets), bearing on each sheet the date of receipt, the international application number, and the stamp of the Preliminary Examining Authority, shall be attached to the report.

(c) The report may identify the person of the preliminary examiner by indicating his name.

65.4 *Dates*

The report shall indicate:

(i) the date on which the demand was submitted, and

(ii) the date of the report; that date shall be the date on which the report is sent to the applicant and the International Bureau.

65.5 *Classification*

(a) The report shall repeat the classification given under Rule 39.3 if the Preliminary Examining Authority agrees with such classification.

(b) Otherwise, the Preliminary Examining Authority shall indicate in the report the classification, at least according to the International Patent Classification, which it considers correct.

65.6 *Statement Under Article 35(2)*

(a) The statement referred to in Article 35(2) shall consist of the words "YES" or "NO," or their equivalent in the language of the report, or some appropriate sign provided for in the Administrative Instructions.

(b) If any of the three criteria referred to in Article 35(2) (that is, novelty, inventive step (non-obviousness), industrial applicability) is not satisfied, the statement shall be negative.

65.7 *Citations Under Article 35(2)*

(a) The report shall contain the citations of the documents considered to be relevant for supporting the statements made under Article 35(2).

(b) The provisions of Rule 39.5(b) and (d) shall apply also to the report.

65.8 *Explanations Under Article 35(2)*

The Administrative Instructions shall contain guidelines for cases in which the explanations referred to in

Article 35(2) should or should not be given and the form of such explanations. Such guidelines shall be based on the principles laid down in Article 35(2) and the following principles:

(i) explanations shall be given whenever the statement in relation to any claim is negative;
(ii) explanation shall be given whenever the statement is positive unless the reason for citing any document is easy to imagine on the basis of consultation of the cited document;
(iii) generally, explanation shall be given if the cited document is held to be relevant only in connection with the question of novelty or only in connection with the question of inventive step (non-obviousness) and not in connection with both questions;
(iv) although, generally, no reference may be made in the explanation to any claim deleted from the original international application or to any claim in the form it had prior to its final amendment, such reference shall exceptionally be allowed, particularly if it can be anticipated that the applicant may wish to reintroduce, before the elected Offices, in part or in whole, the deleted claim or any claim in any of the forms it had prior to its final amendment.

65.9 *Certain Contentions of Applicant in Connection With the Laws of Specific States*

At the specific request of the applicant, the report shall indicate, in relation to any citation appearing in the report, that, in the opinion of the applicant, the citation is not relevant for the purposes of any specific elected State and shall give a brief summary of the reasons for such contention. The contention may only be based on a specific provision of the law of the said State. The applicant must identify such provision. If he fails to do so or if, in the opinion of the Preliminary Examining Authority, the contention is not based on such provision, the report shall not contain the indication of the applicant's contention.

65.10 *Oral Disclosures*

Any oral disclosure referred to in the report by virtue of Rule 59.2 shall be mentioned by indicating the fact that it is in oral disclosure, as well as the date on which the written disclosure referring to the oral disclosure was made available to the public and the date on which the oral disclosure occurred in public.

65.11 *Mention of Corrections of Certain Defects*

If, before the Preliminary Examining Authority, the description has been amended or corrected, or the request has been corrected, or—in order to comply with the prescribed physical requirements—any of the sheets have been replaced, these facts shall be specified in the report.

65.12 *Mention of Certain Defects*

If the Preliminary Examining Authority is of the opinion that, at the time it prepares the report, the application contains any defects in the request or fails in any way to comply with the prescribed physical requirements, it shall include this opinion and the reasons therefor in the report.

65.13 *Signature*

The report shall be signed by an authorized officer of the Preliminary Examining Authority.

65.14 *Form*

The physical requirements as to the form of the report shall be prescribed by the Administrative Instructions.

65.15 *Annexes to the Report*

(a) The replacement sheets referred to in Rule 65.3(b) and, if the report issued on claims other than those contained in the application after amendment made under Article 19, a copy of the claims as amended under that Article shall be annexed to the report.

(b) If, during the preliminary examination, the description was amended, each replacement sheet shall be accompanied by a statement of the Preliminary Examining Authority specifying whether or not the amendments contain new matter.

65.16 *Languages of the Report and the Annexes*

The report and its annexes, if any, shall be in the language in which the international application to which they relate is published.

RULE 66

Transmittal of the Preliminary Examination Report

66.1 *Report*

The Preliminary Examining Authority shall, on the same day, transmit one copy of the preliminary examination report and its annexes, if any, to the International Bureau, and one copy to the applicant.

RULE 67

Translation of the Preliminary Examination Report

67.1 *Languages*

Any elected State may require that the preliminary examination report, established in any language other than the official language, or one of the official languages, of its national Office, be translated into English, French, German, Japanese, or Russian.

RULE 68

Communication of the Preliminary Examination Report

68.1 *Preparation of Copies*

The International Bureau shall prepare the copies of the documents to be communicated under Article 36(3)(a).

68.2 *Time Limit for Communication*

The communication provided for in Article 36(3)(a) shall be effected as promptly as possible.

RULE 69

Translation of Annexes of Preliminary Examination Report

69.1 *Time Limit*

(a) Subject to paragraph (b), the time limit referred to in Article 36(3)(b) shall be two months after the date of the transmittal of the annexes by the Preliminary Examining Authority to the applicant under Article 36(1).

(b) Any replacement sheet and any amendment referred to in Rule 65.15 and filed prior to the transmittal of the translation of the international application required under Article 39 shall be translated and transmitted together with the transmittal under Article 39 or, if filed less than one month before such transmittal, one month after they have been filed.

RULE 70

Withdrawal of Demand or Elections

70.1 *Notification of Elected Offices*

(a) The fact that the demand has been withdrawn shall be promptly notified by the International Bureau to the national Offices of all States which, up to the time of the withdrawal, were elected States and had been informed of their election.

(b) The fact that any election has been withdrawn and the date of receipt of the withdrawal shall be promptly notified by the International Bureau to the elected Office concerned.

70.2 *Notification of the Preliminary Examining Authority*

The fact that the demand or all elections have been withdrawn shall be promptly notified by the International Bureau to the Preliminary Examining Authority if the latter had, at the time of the withdrawal, information to the effect that it was expected to perform an international preliminary examination in respect of the international application to which the withdrawal relates.

70.3 *Informing the Applicant*

Any applicant may ask, in writing, the national Office of any elected State whether his international application is considered withdrawn in the case contemplated under Article 37(4)(a), and the national Office shall inform the applicant accordingly.

70.4 *Faculty Under Article 37(4)(b)*

(a) Any Contracting State wishing to take advantage of the faculty provided for in Article 37(4)(b) shall notify the International Bureau in writing.

(b) The notification under paragraph (a) shall be promptly published by the International Bureau in the Gazette, and shall have effect in respect of international applications filed more than one month after the publication date of the relevant issue of the Gazette.

RULE 71

Faculty Under Article 39 in Respect of Copies, Translations, and Fees

71.1 *Exercise of Faculty*

(a) Any Contracting State wishing to avail itself of the faculty provided for in Article 39 shall, where applicable, notify the International Bureau of:

(i) the languages from which and the language into which it requires translation,
(ii) the amount of the national fee,
(iii) the time limit within which the copy of the international application must be furnished,
(iv) the time limit within which the translation must be furnished,
(v) the time limit within which the national fee must be paid.

(b) The language into which translation may be required must be an official language of the elected Office. If there are several of such languages, no translation may be required if the international application is in one of them. If there are several official languages and a translation must be furnished, the applicant may choose any of those languages.

(c) The time limit shall be computed from the priority date of the international application or from the date of the communication of the preliminary examination report. In the former case, the time limit shall not be shorter than 25 months. In the latter case, the time limit should be at least two months from the date of the said communication and if the time limit, in respect of any given international application, would expire prior to the expiration of the 25th month from the priority date, it shall expire upon the expiration of that month.

(d) Any of the requirements under paragraph (a) may later be changed—within the limits permitted under Article 39—or withdrawn by means of a notification addressed by the Contracting State to the International Bureau.

71.2 *Publication and Effect*

(a) Any notification received under Rule 71.1(a) or (d) shall be promptly published by the International Bureau in the Gazette.

(b) Notifications under Rule 71.1(a), and notifications under Rule 71.1(d) shortening the previously fixed time limit, shall be effective in relation to demands submitted after the expiration of three months computed from the date on which the notification was published by the International Bureau, or, when the notification under Rule 71.1(a) is effected prior to the Contracting State's becoming bound by the provisions of Chapter II, that notification shall become effective on the same day as that on which the said State becomes bound by the provisions of Chapter II.

(c) Notifications under Rule 71.1(d) lengthening the previously fixed time limit, and notifications withdrawing any requirement, shall become effective upon publication by the International Bureau in the Gazette in respect of demands pending at the time or submitted after the date of such publication, or, if the Contracting State effecting the notification fixes some later date, as from the latter date.

RULE 72

Faculty Under Article 40(2) in Respect of Delaying of National Processing

72.1 *Exercise of Faculty*

(a) Any Contracting State having adopted a provision in its domestic law under Article 40(2) shall notify the International Bureau of that fact and shall indicate the time limit after the expiration of which its national Office may proceed to the examination and other processing of the international application.

(b) The time limit shall be expressed in months computed from the priority date of the international application or from the receipt of the preliminary examination report. In the former case, the time limit may not be less than 25 months. In the latter case, if the time limit, in respect of any given international application, would expire prior to the expiration of the 25-month period computed from the priority date, it shall expire upon the expiration of the 25th month from the priority date.

(c) Any Contracting State may—within the limit permitted under Article 40(2)—later change the time limit

fixed under paragraph (a). Such State shall send a corresponding notification to the International Bureau.

(d) Any notification under paragraphs (a) or (c) may be withdrawn by the Contracting State by means of a notification addressed to the International Bureau.

72.2 *Publication and Effect*

(a) Any notification received by the International Bureau under Rule 72.1(a), (c), or (d), shall be promptly published by the International Bureau in the Gazette.

(b) Notifications under Rule 72.1(a), and notifications under Rule 72.1(c) shortening the previously fixed time limit, shall be effective in relation to demands submitted after the expiration of 3 months computed from the date on which the notification was published by the International Bureau, or, when the notification under Rule 72.1(a) is effected prior to the Contracting State's becoming bound by the provisions of Chapter II, that notification shall become effective on the same day as the day on which the said State becomes bound by the provisions of Chapter II.

(c) Notifications under Rule 72.1(c) lengthening the previously fixed time limit, and notifications under Rule 72.1(d), shall become effective upon publication by the International Bureau in the Gazette in respect of demands pending at the time or submitted after the date of such publication, or, if the Contracting State effecting the notification fixes some later date, as from the latter date.

RULE 73

Amendment of Claims Before the Elected Office

73.1 *Time Limit Under Article 41*

The provisions of Rule 47.1 shall apply also before elected Offices, except that the two-month time limit referred to in Rule 47.1(a) shall be computed from the date of the transmittal of the preliminary examination report under Article 36(1).

PART D.—RULES CONCERNING CHAPTER III OF THE TREATY

RULE 74

Computation of Time Limits

74.1 *Periods Expressed in Years*

When a period is expressed as one year or a certain number of years, computation shall start on the day on which the relevant event occurred, and the period shall expire in the relevant subsequent year in the month having the same name and on the day having the same number as the month and the day on which the computation started, provided that if the relevant subsequent month has no day with the same number the period shall expire on the last day of that month.

74.2 *Periods Expressed in Months*

When a period is expressed as one month or a certain number of months, computation shall start on the day on which the relevant event occurred, and the period shall expire in the relevant subsequent month on the day which has the same number as the day on which the computation started, provided that if the relevant subsequent month has no day with the same number the period shall expire on the last day of that month.

74.3 *Periods Expressed in Days*

When a period is expressed as a certain number of days, computation shall start on the day following the day on which the relevant event occurred, and the period shall expire on the day on which the last day of the count has been reached.

74.4 *Local Dates*

(a) The date which is taken into consideration as the starting date of the computation of any period shall be the date which prevails in the locality at the time when the relevant event occurred.

(b) The date on which any period expires shall be the date which prevails in the locality in which the required document must be filed or the required fee must be paid.

74.5 *Expiration on a Non-Working Day*

If the expiration of any period during which any document or fee must reach a national or international administration falls on a day on which such administration is not open to the public for the purposes of the transaction of official business, or on which ordinary mail is not delivered in the locality in which such administration is situated, the period shall expire on the next subsequent day on which neither of the said two circumstances exists.

74.6 *Date of Documents*

Where a period starts on the day of the date of a document or letter emanating from a national or international administration, any interested party may prove that the said document or letter was mailed on a day later than the date it bears, in which case the date of actual mailing shall, for the purposes of computing the period, be considered to be the date on which the period starts.

74.7 *End of Working Day*

(a) A period expiring on a given day shall expire at the moment the national or international administration with which the document must be filed or to which the fee must be paid closes for business on that day.

(b) Any administration may depart from the provisions of paragraph (a) up to midnight on the relevant day.

(c) The International Bureau shall be open for business until 6 p.m. (18 hours).

RULE 75

Modification of Time Limits Fixed in the Treaty

75.1 *Proposal*

(a) Any Contracting State and the Director General may propose a modification under Article 47(2).

(b) Proposals made by a Contracting State shall be presented to the Director General.

75.2 *Decision by the Assembly*

(a) When the proposal is made to the Assembly, its text shall be sent by the Director General to all Contracting States at least two months in advance of that session of the Assembly whose agenda includes the proposal.

(b) During the discussion of the proposal in the Assembly, the proposal may be amended or consequential amendments proposed.

(c) The proposal shall be considered adopted if none of the Contracting States present at the time of voting votes against the proposal.

75.3 *Decision by Correspondence*

(a) When consultation by correspondence is chosen, the proposal shall be included in a written communication from the Director General to the Contracting States, inviting them to express their vote in writing.

(b) The invitation shall fix the time limit within which the reply containing the vote expressed in writing must reach the International Bureau. That time limit shall not be less than 3 months from the date of the invitation.

(c) Replies containing formal proposals for amending the proposal shall be considered negative votes. Replies merely containing statements as to preferences or other observations shall be considered positive votes.

(d) The proposal shall be considered adopted if none of the Contracting States opposes the amendment and if at least one-half of the Contracting States express either approval or indifference or abstention.

RULE 76

Delay or Loss in Mail

76.1 *Delay or Loss in Mail*

(a) Subject to the provisions of Rule 22.2(d), any interested party may offer evidence that he has mailed the document or letter five days prior to the expiration of the time limit. Except in cases where surface mail normally arrives at its destination within two days of mailing, or where no airmail service is available, such evidence may be offered only if the mailing was by airmail. In any case, evidence may be offered only if the mailing was by mail recorded or registered by the postal authorities.

(b) If such mailing is proven to the satisfaction of the national or international administration which is the addressee, delay in arrival shall be excused, or, if the document or letter is lost in the mail, substitution for it of a new copy shall be permitted, provided that the interested party proves to the satisfaction of the said administration that the document or letter offered in substitution is identical with the document or letter lost.

(c) In the cases provided for in paragraph (b), evidence of mailing within the prescribed time limit, and, where the document or letter was lost, the substitute document or letter as well, shall be submitted within one month after the date on which the interested party noticed—or with due diligence should have noticed—the delay or the loss, and in no case later than 6 months after the expiration of the time limit applicable in the given case.

76.2 *Interruption in the Mail Service*

(a) Subject to the provisions of Rule 22.2(d), any interested party may offer evidence that on any of the 10 days preceding the day of expiration of the time limit the postal service was interrupted on account of war, revolution, civil disorder, strike, natural calamity, or other like reasons, in the locality where the interested party resides or has his place of business or is staying.

(b) If such circumstances are proven to the satisfaction of the national or international administration which is the addressee, delay in arrival shall be excused, provided that the interested party proves to the satisfaction of the said administration that he effected the mailing within five days after the mail service was resumed. The provisions of Rule 76.1(c) shall apply *mutatis mutandis*.

RULE 77

Right to Practice Before International Authorities

77.1 *Proof of Right*

The International Bureau, the competent Searching Authority, and the competent Preliminary Examining Authority, may require the production of proof of the right to practice referred to in Article 49.

77.2 *Information*

(a) The national or the international administration before which it is alleged that the interested person has a right to practice shall, upon request, inform the International Bureau, the competent Searching Authority, or the competent Preliminary Examining Authority, whether such person has the right to practice before it.

(b) Such information shall be binding upon the International Bureau, the Searching Authority, or the Preliminary Examining Authority, as the case may be.

PART E.—RULES CONCERNING CHAPTER IV OF THE TREATY

RULE 78

Absence of Quorum in the Assembly

78.1 *Consultation by Correspondence*

In the case provided for in Article 50(5)(b), the International Bureau shall communicate the decisions of the Assembly (other than those concerning the Assembly's own procedure) to the States members of the Assembly which were not represented and shall invite them to express in writing their vote or abstention within a period of 3 months from the date of the communication. If, at the expiration of this period, the number of States having thus expressed their vote or abstention attains the number of States which was lacking for attaining the quorum in the session itself, such decisions shall take effect provided that at the same time the required majority still obtains.

RULE 79

Gazette

79.1 *Contents*

(a) The Gazette referred to in Article 51(5) shall contain:

(i) for each published international application, data specified by the Administrative Instructions taken from the front page of the pamphlet published under Rule 44, the drawing or formula appearing on the said front page, and the abstract,

(ii) notices whose publication is required under the Treaty or these Regulations,

(iii) any other useful information prescribed by the Administrative Instructions, provided access to such information is not prohibited under the Treaty or these Regulations.

79.2 *Languages*

(a) The Gazette shall be published in English-language editions and French-language editions. It shall also be published in editions in any other language, provided the cost of publication is assured through sales or subventions.

(b) The Assembly may order the publication of the Gazette in languages other than those referred to in paragraph (a).

79.3 *Frequency*

The Gazette shall be published once a week.

79.4 *Sale*

The subscription and other sale prices of the Gazette shall be fixed in the Administrative Instructions.

79.5 *Title*

The title of the Gazette shall be "Gazette of International Patent Applications," and "Gazette des Demandes internationales de Brevets," respectively.

79.6 *Further Details*

Further details concerning the Gazette may be provided for in the Administrative Instructions.

RULE 80

Amendment of the Regulations

80.1 *Requirement of Unanimity*

(a) Amendment of the following provisions of these Regulations shall require that no State member of the Assembly vote against the proposed amendment:

(i) Rule 3.2 (Subject Excluded)
(ii) Rule 63 (Purview of the Treaty) as far as it refers to Rule 3.2
(iii) Rule 14.1 (Transmittal Fee)
(iv) Rule 31 (Relevant Prior Art for International Search)
(v) Rule 32 (Minimum Documentation)
(vi) Rule 59 (Prior Art for Preliminary Examination)
(vii) the present Rule.

(b) Any proposal for amending a Rule referred to in paragraph (a), if the proposal is to be decided upon in the Assembly, shall be communicated to all Contracting States at least 2 months prior to the opening of that session of the Assembly which is called upon to make a decision on the proposal.

RULE 81

Administrative Instructions

81.1 *Scope*

(a) The Administrative Instructions shall contain provisions:

(i) concerning matters in respect of which these Regulations expressly refer to such Instructions,
(ii) concerning any details in respect of the application of these Regulations.

(b) The Administrative Instructions shall not be in conflict with the provisions of the Treaty, these Regulations, or any agreement concluded by the International Bureau with a Searching Authority, or a Preliminary Examining Authority.

81.2 *Source*

(a) The Administrative Instructions shall be drawn up and promulgated by the Director General after consultation with the Receiving Offices and the Searching and Preliminary Examining Authorities.

(b) They may be modified by the Director General after consultation with the Offices or Authorities which have a direct interest in the proposed modification.

(c) The Assembly may invite the Director General to modify the Administrative Instructions, and the Director General shall proceed accordingly.

81.3 *Publication and Entry Into Force*

(a) The Administrative Instructions and any modification thereof shall be published in the Gazette.

(b) Each publication shall specify the date on which the published provisions come into effect. The dates may be different for different provisions, provided that no provision may be declared effective prior to its publication in the Gazette.

PART F.—RULES CONCERNING SEVERAL CHAPTERS OF THE TREATY

RULE 82

Representation

82.1 *Definitions*

For the purposes of Rule 82.2 and 82.3:

(i) "agent" means any of the persons referred to in Article 49.
(ii) "common representative" means the applicant referred to in Rule 5.8.

82.2 *Effects*

(a) Any act by or in relation to an agent shall have the effect of an act by or in relation to the applicant or applicants having appointed the agent.

(b) Any act by or in relation to a common representative or his agent shall have the effect of an act by or in relation to all the applicants.

(c) If there are several agents appointed by the same applicant or applicants, any act by or in relation to any of the several agents shall have the effect of an act by or in relation to the said applicant or applicants.

(d) The effects described in paragraphs (a), (b), and (c), shall apply to the processing of the international application before the Receiving Office, the International Bureau, the Searching Authority, and the Preliminary Examining Authority.

82.3 *Appointment*

(a) Appointment of any agent or of any common representative within the meaning of Rule 5.8(a), if the said agent or common representative is not designated in the request signed by all applicants, shall be effected in a separate signed power of attorney.[7]

(b) The power of attorney [7] may be submitted to the Receiving Office or the International Bureau. Whichever of the two is the recipient of the power of attorney [7] submitted shall immediately notify the other and the interested Searching Authority and the interested Preliminary Examining Authority.

(c) If the separate power of attorney [7] is not signed as provided in paragraph (a), or if the required separate power of attorney [7] is missing, or if the indication of the name or address of the appointed person does not comply with Rule 5.4, the power of attorney [7] shall be considered non-existent until the defect is corrected.

[7] *Observation:* "Power of attorney" in English simply means an authorization given to a person for the purposes of representation. Such person is not required to be an attorney at law. He may be a lawyer, a patent agent or any other person appointed by the applicant to repreesnt him. The word "attorney," in the expression "power of attorney," means an agent (in the legal sense of the word). "Power of attorney" corresponds to "*pouvoir*" in French and to "*Vollmacht*" in German.

82.4 *Revocation*

(a) Any appointment may be revoked by the persons or their successors in title who have made the appointment.

(b) Rule 82.3 shall apply, *mutatis mutandis*, to the document containing the revocation.

RULE 83

Obvious Errors of Transcription

83.1 *Rectification*

(a) Subject to paragraphs (b) and (c), obvious errors of transcription in the international application or other papers submitted by the applicant may be rectified.

(b) Errors which are due to the fact that something other than what was obviously intended was written in the international application or other paper shall be regarded as obvious errors of transcription. Omissions of entire elements of the international application, even if clearly resulting from inattention at the stage of copying or assembling sheets, shall not be rectifiable. The rectification itself shall be obvious in the sense that anyone would immediately realize that nothing else could have been intended than what is offered as rectification.

(c) Rectification may be made on the request of the applicant. The authority having discovered what appears to be an obvious error of transcription may invite the applicant to present a request for rectification.

(d) Any rectification shall require the express authorization:

(i) of the Receiving Office if the error is in the request,
(ii) of the Searching Authority if the error is in any other part of the international application,
(iii) of the Preliminary Examining Authority if the error is in any paper submitted to that Authority, and
(iv) of the International Bureau if the error is in any paper, other than the international application or amendments or corrections to that application, submitted to the International Bureau.

The date of the authorization shall be recorded in the files of the international application.

(e) Any rectification authorized by authorities other than the International Bureau shall be promptly notified by the authorizing authority to the International Bureau.

RULE 84

Correspondence

84.1 *Need for Letter and for Signature*

(a) Any paper submitted by the applicant in the course of the international procedure provided for in the Treaty and these Regulations, other than the international application itself, shall be accompanied by a letter identifying the international application to which it relates. The letter shall be signed by the applicant.

(b) If the letter fails to comply with the requirements provided for in paragraph (a), the paper shall be considered as if it had not been submitted.

84.2 *Languages*

(a) Subject to the provisions of paragraphs (b) and (c), any letter or document sent or submitted by the applicant to the Searching Authority or the Preliminary Examining Authority shall be in the same language as the international application to which it relates.

(b) Any letter from the applicant to the Searching or the Preliminary Examining Authority may be in a language other than that of the international application, provided the said Authority authorizes the use of such language.

(c) When a translation is required under Rule 50.2, the Preliminary Examining Authority may require that any letter from the applicant to the said Authority be in the language of that translation.

(d) Any letter from the applicant to the International Bureau shall be in English or French.

(e) Any letter or notification from the International Bureau to the applicant or to any national Office shall be in English or French.

84.3 *Mailings by Administrations*

Any document or letter emanating from or transmitted by a national or international administration and constituting an event from the date of which any time limit under the Treaty or these Regulations commences to run shall be sent by recorded or registered airmail provided that surface mail may be used instead of airmail in cases where surface mail normally arrives at its destination within two days from mailing or where airmail service is not available.

RULE 85

Keeping of Records and Files

85.1 *Receiving Office*

Each Receiving Office shall keep the records relating to each international application or purported international application, including the home copy, for at least 10 years from the international filing date.

85.2 *International Bureau*

(a) The International Bureau shall keep the file, including the record copy, of any international application for at least 30 years from the date of receipt of the record copy.

(b) The basic records of the International Bureau shall be kept indefinitely.

85.3 *Searching and Preliminary Examining Authorities*

Each Searching Authority and each Preliminary Examining Authority shall keep the file of each international application it receives for at least 10 years from the date of receipt.

RULE 86

Furnishing of Copies by the International Bureau and the Preliminary Examining Authority

86.1 *Conditions of Furnishing*

At the request of the applicant or any person authorized by the applicant, the International Bureau and the Preliminary Examining Authority shall furnish, subject to reimbursement of the cost of the service, copies of any document contained in the file of the applicant's international application.

RULE 87

Availability of Translations

87.1 *Copy of Translation*

(a) When the applicant furnishes a translation of the

international application to any designated or elected Office, he shall, subject to the provisions of paragraph (b), simultaneously furnish a copy of the same translation to the International Bureau. When transmitting the translation to the national Office, the applicant shall indicate that he has complied with the said obligation. Failing such indication, the national Office shall, itself, prepare and transmit a copy of the translation to the International Bureau and may charge a fee to the applicant for such service.

(b) If translations into the same language are filed in several national Offices, paragraph (a) shall apply only to the translation first furnished, or, if several are furnished on the same day, to one of them only.

DECISIONS IN PATENT AND TRADEMARK CASES

United States Court of Appeals District of Columbia Circuit

ELI LILLY AND COMPANY
v.
EDWARD J. BRENNER, COMMISSIONER OF PATENTS

No. 20,083. Decided March 29, 1967

[126 U.S. App. D.C. 171; 375 F.2d 599; 153 USPQ 95]

1. PATENTABILITY—REFERENCE—FOREIGN FILING DATE NOT EFFECTIVE DATE OF PATENT AS A REFERENCE—35 U.S.C. 102(e) and 119.

On the question whether, considering the provisions of 35 U.S.C. 102(e) and 119, "material disclosed in a foreign application operate as a reference as of the date of the foreign filing or only as of the actual American filing" (which matured into a U.S. patent), and with reference to the opinion in *Application of Hilmer* by the Court of Customs and Patent Appeals which decided that question in favor of the American filing date, *Held* that "We are of course not bound to do more than accord to the holding of the Court of Customs and Patent Appeals the degree of deference due a coordinate court but we conclude that the holding of that court presents the better alternative notwithstanding the vigorous and cogent arguments to the contrary which are reflected in the opinions of Judge Worley and the District Court.

APPEAL from the United States District Court for the District of Columbia.

REVERSED AND REMANDED.

Mr. Dugald S. McDougall and *Mr. James H. Littlepage for appellant.*

Mr. Joseph Schimmel, Solicitor, for appellee.

Before BASTIAN, *Senior Circuit Judge*, BURGER and WRIGHT, *Circuit Judges*

BURGER, *Circuit Judge.*

Appellant brought suit under 35 U.S.C. § 145 (1964) claiming it was entitled to a patent denied by the Patent Office. This appeal challenges the District Court's grant of the Commissioner's motion for summary judgment and denial of appellant's motion.

Appellant is the assignee of Richard T. Rapala. The Patent Office and the District Court denied it a patent on the ground that Rapala's invention, which relates to modified steroids having medical utility, was unpatentable over disclosures in a patent granted to Feather, which was filed in Great Britain on September 24, 1959, and in the United States on September 19, 1960. Appellant submitted to the Patent Office the required inventor's affidavit that he believed he was the first inventor. 35 U.S.C. § 115. However, since the subject matter of the Rapala invention is disclosed in the Feather patent, appellant was required to prove that he made the invention prior to the filing date of the Feather application or be barred from receiving a patent on the ground that the invention was known, albeit not by him, at the time of his discovery. 35 U.S.C. § 102(e). Since appellant's evidence carried Rapala's date of invention back of September 19, 1960, the date of the Feather filing in this country, but not back of September 24, 1959, the date of the Feather filing in Great Britain, the question arose as to which date was the applicable one.

The Patent Office, affirmed by the District Court, held that by virtue of 35 U.S.C. § 119, the Feather patent was filed in the United States,

within the meaning of that term in 35 U.S.C. § 102(e), on September 24, 1959. Section 119 provides that an application for an American patent based on an earlier foreign filing in certain cases shall "have the same effect as the same application would have if filed in this country on the date on which the application" was filed in the foreign country.[1] The question presented on appeal is whether the Patent Office and the District Court correctly interpreted sections 102(e) and 119. Does material disclosed in a foreign application operate as a reference as of the date of the foreign filing or only as of the actual American filing?

In resolving this question, we are aided by the exhaustive treatment given it by the District Court in the instant case, 248 F.Supp. 402 (D.D.C. 1965), and also by the careful analysis of Judge Rich in *Application of Hilmer*, 359 F.2d 859 (C.C.P.A. 1966), in which the Court of Customs and Patent Appeals, over the dissent of Chief Judge Worley, reached the opposite result from the District Court. Not surprisingly the Commissioner rests his argument on the District Court opinion, and appellant champions the merits of the Court of Customs and Patent Appeals opinion.

We conclude that in light of the exhaustive and careful consideration of the issues in the District Court opinion now under review and in *Hilmer* further exposition would contribute little to the subject. **[1]** We are of course not bound to do more than accord to the holding of the Court of Customs and Patent Appeals the degree of deference due a coordinate court but we conclude that the holding of that court presents the better alternative notwithstanding the vigorous and cogent arguments to the contrary which are reflected in the opinions of Judge Worley and the District Court.

A final argument now urged by the Commissioner and which was not passed on by the court in *Hilmer* warrants comment. This argument is premised on a 1952 change in the Patent Act. Prior to that time, an application claiming a foreign priority date was not required to contain a copy of the foreign application upon which that claim was based, unless the application had been involved in an interference proceeding or the applicant had to file a copy to overcome a reference having an effective date between the applicant's foreign filing date and his actual United States filing date. In the 1952 revision of the Patent Act, a paragraph was added to § 119 requiring the filing of a certified copy of the foreign application on which the priority claim is based.

The Commissioner urges that even if before the 1952 amendment § 119 did not require the result reached by the Patent Office and the District Court in the instant case, it now does. His argument is that before the 1952 change the Patent Office did not use the foreign filing as the effective date of the reference because the applicant against whom the reference was invoked would have had no way of disproving the foreign patentee's right to that date without a certified copy of the foreign application attached to the dependent United States application because all foreign countries do not necessarily allow public inspection of their patent records. However, his argument continues, when the 1952 revision required a certified copy to be attached, the factual situation which motivated the prior practice was no longer applicable.

[1] In pertinent part § 119 reads:
An application for patent for an invention filed in this country by any person who has, or whose legal representatives or assigns have, previously regularly filed an application for a patent for the same invention in a foreign country which affords similar privileges in the case of applications filed in the United States or to citizens of the United States, shall have the same effect as the same application would have if filed in this country on the date on which the application for patent for the same invention was first filed in such foreign country, if the application in this country is filed within twelve months from the earliest date on which such foreign application was filed; but no patent shall be granted on any application for patent for an invention which had been patented or described in a printed publication in any country more than one year before the date of the actual filing of the application in this country, or which had been in public use or on sale in this country more than one year prior to such filing.

As we see it, this argument is essentially an advocate's position rather than an explication of the decision made by the Patent Office Board of Appeals. The statutory change was not adverted to in the opinion of the Board in the instant case; indeed, in discussing the history of § 119, the Board of Appeals said this about the 1952 revision:

> references to designs were removed for inclusion in another section and some changes in language and a slight modification were made, and a paragraph [requiring a certified copy] was added, but *the parts of the statute of concern here are the same as originally enacted.* [Emphasis added.]

Furthermore, the Patent Office points to nothing indicating that its former approach to § 119 was based on the lack of a certified copy. There is nothing to that effect in *Viviani* v. *Taylor* v. *Herzog*, 72 USPQ 448 (1935), which establish the Patent Office practice which lasted for almost thirty years. Interestingly, one authority cited to us by the Patent Office urged a change in the Office's policy even before the 1952 revision:

> The United States does not have this procedural requirement [of accompanying the American application with proof of the foreign filing], but that is a matter of adjective law which should not affect the substantive rule that a novelty-establishing event is also a novelty-negativing event. Glascock & Stringham, Patent Law: Substantive Aspects 138 (1943).

Finally, there is no indication that Congress intended the 1952 revision to have the effect the Patent Office would have us give it. The reviser's note to § 119 says, "The second paragraph is new, making an additional procedural requirement for obtaining the right of priority." If the change had the significance the Patent Office attributes to it and if the absence of this provision were the reason for the old rule, one would think that Congress would have indicated some awareness that it was making a substantive change.

We emphasize that we have been concerned only with a foreign application filed in this country on a priority basis and invoked as a reference. Different considerations may be involved in interference proceedings, but this we do not decide.

U.S. Court of Customs and Patent Appeals

FORT HOWARD PAPERS COMPANY
v.
GULF STATES PAPER CORPORATION

No. 7797. Decided May 18, 1967

[54 CCPA 1375; 376 F.2d 904; 153 USPQ 646]

1. TRADEMARK—CONFUSING SIMILARITY—"E-Z NAPS" AND "HANDINAPS" FOR PAPER NAPKINS.

"It is not necessary to discuss the marks beyond noting the facts that they have the syllable 'naps' in common, which is obviously derived from the word 'napkins,' and that the remainder is 'E-Z' in the case of applicant and 'HANDI' in the case of opposer. It becomes a matter of subjective opinion whether, considering sound, appearance and meaning of the marks as a whole and probable manner of use by vendors, distributors, users, and purchasers, concurrent use on the same goods is likely to result in confusion, mistake or deception. The Board did not think so and neither do we."

2. SAME—SAME—FAMILY OF MARKS.

"We have considered opposer's contentions with respect to its alleged possession of a family of 'nap' marks but, like the Board, we do not find that the record supports the existence of a publicly-recognized family of such marks linked with appellant-opposer as a source. Opposer has not relied on any registrations other than the two mentioned above."

AFFIRMED.

Arthur L. Morsell, Curtis B. Morsell, Arthur L. Morsell, Jr. for appellant.

Raphael Semmes (*G. Mallet Prevost*, of counsel) for appellee.

Before WORLEY, *Chief Judge*, RICH, SMITH, and ALMOND, *Associate Judges*, and Judge WILLIAM H. KIRKPATRICK *

RICH, *J.*, delivered the opinion of the court.

This appeal is from the decision of the Patent Office Trademark Trial and Appeal Board, 146 USPQ 593, dismissing appellant's opposition to appellee's application to register the trademark "E-Z NAPS," Serial No. 149,844, filed July 26, 1962, for facial tissue, toilet tissue, paper napkins, and paper towels.

The sole issue is likelihood of confusion, mistake, or deception within the meaning of section 2(d) of the Lanham Act, 15 U.S.C. 1052(d). Opposer is the prior user and owner of registrations of "handinap" and "HANDINAP," Reg. Nos. 616,224 and 616,225 of Nov. 15, 1955, for paper napkins. Applicant's earliest claimed date of use is July 5, 1962. The goods being in part the same, we proceed on the basis that there is no difference in the goods. The decision is therefore determined primarily by the differences and similarities in the marks.

Both parties produced trade witnesses who testified, for the opposer, that confusion would in their opinion be likely, and, for the applicant, that confusion would not be likely. We agree with the Board that this testimony is conflicting and subsequently equally balanced and therefore of no net probative force.

[1] It is not necessary to discuss the marks beyond noting the facts that they have the syllable "naps" in common, which is obviously derived from the word "napkins," and that the remainder is "E-Z" in the case of applicant and "HANDI" in the case of opposer. It becomes a matter of subjective opinion whether, considering sound, appearance and meaning of the marks as a whole and probable manner of use by vendors, distributors, users, and purchasers, concurrent use on the same goods is likely to result in confusion, mistake or deception. The Board did not think so and neither do we.

While, as we have often noted, prior decisions are not of much value in cases of this kind, we note appellant's reliance on our opinion in *Magnavox Co.* v. *Multivox Corp. of America*, 52 CCPA 1025, 341 F.2d 139, 144 USPQ 501 (1965). Several other decisions are cited but this one is stressed. A more pertinent case, in our view, is *E. L. Bruce Co.* v. *American Termicide Co.*, 48 CCPA 762, 285 F.2d 462, 128 USPQ 341 (1960), where we held that concurrent use of "TERMICIDE" and "TERMINIX" for insect exterminating services and insecticides, respectively, particularly in the termite control field, would not be reasonably likely to cause confusion. The parallel between the syllable "termi" in the termite control field and the syllable "nap" in the napkin field should be self-evident.

[2] We have considered opposer's contentions with respect to its alleged possession of a family of "nap" marks but, like the Board, we do not find that the record supports the existence of a publicly-recognized family of such marks linked with appellant-opposer as a source. Opposer has not relied on any registrations other than the two mentioned above.

The decision of the Board is affirmed.

AFFIRMED.

* Senior District Judge, Eastern District of Pennsylvania, sitting by designation.

U.S. Court of Customs and Patent Appeals

IN RE WILLIAM C. RAINER, EDWARD M. REDDING, JOSEPH J. HITOV, ARTHUR W. SLOAN, AND WILLIAM D. STEWART

No. 7668. Decided June 2, 1967

[54 CCPA —; 377 F.2d 1006; 153 USPQ 803]

1. RES JUDICATA—CONSIDERATION OF REARGUMENT PRECLUDED.

"We have recently restricted the application of res judicata in ex parte patent cases. *In re Herr* (Patent Appeal No. 7751, decided May 11, 1967), 54 CCPA —; — F.2d —; — USPQ —. We, therefore, apply that doctrine herein only to the extent of precluding consideration of reargument of the issue of the obviousness, in view of Lawton, of the preparation of the cross-linked polymers of the earlier case by the process there disclosed * * *."

2. PATENTABILITY—PROCESS—COMPOUND—CHARACTERIZATION OF PRODUCT—GRAFT POLYMERS.

"Appellants' essential challenge to this decision is based on their characterization of the compounds here involved as *graft* polymers. The Lawton reference makes no mention of graft polymerization. The question, of course, is whether this makes a difference. We think not."

3. SAME—SAME—SAME—SAME—SAME.

"Appellants seem to urge that their denomination as graft polymers somehow imparts unobviousness to both compounds and process. We think that this contention must fail because the obviousness of neither is properly controverted. Appellants do not contend that these are *different* compounds than those which would be within the contemplation of one of ordinary skill with the reference before him nor that the properties thereof would be unexpected. Characterization is not strong enough a peg to support patentability. Even were appellants to have *discovered* that the obvious compounds might properly be designated 'graft polymers,' they could not prevail. See *De Forest Radio Co.* v. *General Electric Co.*, 283 U.S. 664 (1931)."

4. PATENTABILITY—EVIDENCE—EFFECT OF PRIOR LITIGATION.

"Appellants assert that the Patent Office is bound by its tacit admission and the holding of the court in *Magat* v. *Ladd*, 143 USPQ 186 (D. D. C. 1964). There the court observed that the Patent Office had 'tacitly conceded' the distinction between graft polymers and cross-linked polymers. The court held that Lawton in no way suggests graft polymers nor is the process disclosed capable of producing them. The evidence in that case apparently showed that cross-linked and graft polymers are mutually exclusive entities. We are not here so impeded, having before us the contrary assertions of both appellants and Patent Office. We have recently emphasized the importance of the identity of the records when the preclusive effect of earlier litigation between the same parties is urged. *In re Herr*, supra. A fortiori, divergent records *and different parties* forbid the attribution of any preclusive effect. Appellants' 'additional' argument, for the patentability of claim 17, based on *Magat*, therefore fails."

5. SAME—CRITICALITY—SELECTION OF A TEMPERATURE.

"Criticality must be established before unobviousness can be predicated on the selection of a temperature within the range disclosed by the reference."

6. CLAIM—BROADER THAN DISCLOSURE—35 U.S.C. 112.

"The thrust of the inadequate disclosure rejection is that appellants have claimed more broadly than they have invented. It is maneuvered into the shadow, at least, of section 112 by the observation that the specification gives no indication whether these monomers for which there is no specific example will behave on irradiation like styrene, which forms a graft copolymer, or like ethylene glycol dimethacrylate, which does not."

7. SAME—SAME—REASONABLE DEFINITION OF INVENTION.

"The adequacy of the disclosure is a function of the nature of the disclosure. *In re Cavallito*, 48 CCPA 720, 282 F.2d 363, 127 USPQ 206 (1960). In chemical cases, important considerations include the type of reactions, the state of the art, the representative nature of the examples, and the breadth of the claims. The question which must be asked in every case is whether the claims are, in fact, reasonable definitions of the inventions disclosed."

8. SAME—SAME.

"The present case is unusual in that appellants' specification is the evidence of its own inadequacy. The Board properly relied upon it. We think the Board properly rejected claims 9–11 for inadequate disclosure [because of undue breadth]. Each of those claims includes several polyallyl esters. But the only polyallyl ester whose irradiation is reported did not form a graft copolymer. We, therefore, affirm the rejection of claims 9–11."

9. APPLICATION — DISCLOSURE — SUFFICIENCY OF DISCLOSURE — WORDS AND PHRASES — "SHAPED ARTICLE."

"Appellants point to the disclosure of the irradiation of polyethylene-monomer *blends* of a certain thickness and argue that the irradiation of a sheet is thus disclosed. And a sheet, in appellants' opinion, is a 'shaped article.' It seems to us that the essence of appellants' argument is that all polymer-monomer mixtures, since necessarily of *some* thickness, constitute shaped articles. We do not believe that 'shaped' has this minimal meaning in appellants' claims. We could not attribute any significance to the second step—'preparing a shaped article from said mixture'—if all mixtures were inherently shaped articles."

MODIFIED.

Alvin Guttag (*C. Edward Parker*, of counsel) for appellants.

Joseph Schimmel (*Jack E. Armore*, of counsel) for the Commissioner of Patents.

Before WORLEY, *Chief Judge*, and RICH, MARTIN, SMITH and ALMOND, *Associate Judges*

RICH, *J.*, delivered the opinion of the court.

The appeal is from decisions of the Board of Appeals,[1] affirming the Examiner's rejection of claims 2–6, 8–12, 17, 20, and 48–59 in application Serial No. 12,339, filed March 2, 1960, entitled "Polyethylene." Claims 18 and 63 have been allowed.

Introduction

The invention relates to graft copolymers of polyethylene and certain other compounds, their method of preparation, and articles made thereof. The following claims are typical of those rejected:

2. A process comprising irradiating normally solid polyethylene at a dosage of at least about 2×10^6 REP in contact with a material selected from the group consisting of a polymerizable ethylenically unsaturated hydrocarbon monomer other than ethylene, halogenated styrene, alkyl acrylates, alkyl methacrylates, dialkenyl oxalates, diallyl phthalate, diallylmaleate, diallyl fumarate, dialkyl maleates and dialkyl fumarates to form a graft polymer.

9. A bottle made of irradiated polyethylene, the irradiation being to an extent of at least 2×10^6 REP, having grafted thereto a polymer formed by polymerizing a member of the group consisting of a polymerizable ethylenically unsaturated hydrocarbon monomer other than ethylene, halogenated styrene, alkyl acrylates, alkyl methacrylates, N,N-methylene-bis-acrylamide, dialkenyl oxalates, diallyl phthalate, triallyl cyanurate, diallyl maleate, diallyl fumarate, triallyl melamine, dialkyl maleates and dialkyl fumarates on said polyethylene.

17. A graft polymer of irradiated polyethylene with a polymer of an ethylenically unsaturated hydrocarbon monomer, other than ethylene, said polymer of said monomer being formed in the presence of said polyethylene, said irradiation being to an extent of at least 2×10^6 REP.

[1] This case was twice before a board consisting of Asp and Lidoff, Examiners-in-Chief, and Behrens, Acting Examiner-in-Chief. The latter wrote both opinions.

49. The process of preparing a shaped article exhibiting dimensional and thermal stability and resistance to oxidative degradation at temperatures up to 250° C. which comprises (1) preparing an intimate mixture of from 60 to 95 parts by weight of (*a*) polyethylene, and a complementary proportion of from 40 to 5 parts by weight of (*b*) at least one organic compound selected from the group consisting of monomeric esters of methacrylic acid and monomeric esters of acrylic acid; (2) preparing a shaped article from said mixture, and (3) irradiating said shaped article with high energy, ionizing radiation for a time sufficient to provide a radiation dose of from 36×10^6 rads to 720×10^6 rads.

57. A bottle made of irradiated polyethylene, the irradiation being to an extent of at least 2×10^6 REP, having grafted thereto a polymer formed by polymerizing a material selected from the group consisting of a polymerizable ethylenically unsaturated hydrocarbon monomer other than ethylene, alkyl acrylates and alkyl methacrylates.

Claims 3–6, and 12, 20, and 48 are dependent upon claim 2 and recite additional limitations including the presence of a "free radical engendering compound," an inert atmosphere, a vacuum, an irradiation dosage of at least 6×10^6 REP[2] and a temperature of at least the transition point of polyethylene. Claim 8 restricts the material in contact with polyethylene in the process of claim 2 to a hydrocarbon monomer.

Claims 10 and 11 restrict the polymer coating of claim 9 to the exterior and interior of the bottle respectively.

Claims 50–54 and 56 are process claims which require the same three basic steps as claim 49. Claim 55 is directed to a shaped article made by the process of claim 49.

Claims 58 and 59 restrict the polymer coating of claim 57 to the exterior and interior of the bottle respectively.

The Board affirmed rejections of the appealed claims on the bases of res judicata, obviousness, inadequate disclosure, and indefiniteness (improper Markush group). It relied on *In re Rainer*, 49 CCPA 1243, 305 F.2d 505, 134 USPQ 343 (1962), Lawton et al., *Irradiation of Polymers by High-Energy Electrons*, 172 Nature 76–77 (1953) and the following patents:

Cole, 2,919,473, January 5, 1960.
Brophy, 2,670,483, March 2, 1954.

In *In re Rainer*, while reversing as to some claims, we affirmed rejections of several claims in an application of which the present application is a continuation-in-part. The former application was concerned with "condensation products of polyethylene with other polymers and ethylenically unsaturated monomers," characterized as "new cross-linked polymers of increased strength and rigidity * * *." These were prepared by the irradiation of polyethylene "in the presence of other non-polar or only slightly polar polymers or ethylenically unsaturated monomers." The following claims are typical of those whose rejection was affirmed:

31. A process comprising irradiating normally solid polyethylene at a dosage of at least about 2×10^6 REP admixed with a material selected from the group consisting of hydrocarbon polymers containing a plurality of isobutylene units, a liquid partially depolymerized rubber, a liquid butadiene styrene copolymer, a liquid butadiene acrylonitrile polymer, a polymerizable ethylenically unsaturated hydrocarbon monomer other than ethylene, halogenated styrene, alkyl acrylates, alkyl methacrylates, N,N-methylene-bis-acrylamide, dialkenyl oxalates, diallyl phthalate, ethylene glycol dimethacrylate, triallyl cyanurate, diallyl maleate, diallyl fumarate, triallyl melamine, dialkyl maleates and dialkyl fumarates to form a cross-linked polyethylene copolymer.

[2] A REP, as is recognized in the art, is defined as that amount of nuclear radiation which dissipates 93 ergs of energy per gram of tissue producing 1.61×10^{12} ion pairs in the process. It is approximately equal to the amount of energy that would be dissipated by a one roentgen X-ray beam in a gram of tissue.

39. A process comprising irradiating normally solid polyethylene at a dosage of between about 2×10^6 REP and 200×10^6 [REP] with high-energy radiation equivalent to at least about 750,000 electron volts admixed with a material selected from the group consisting of hydrocarbon polymers containing a plurality of isobutylene units, a liquid partially depolymerized rubber, a liquid butadiene styrene copolymer, a liquid butadiene acrylonitrile polymer, a polymerizable ethylenically unsaturated hydrocarbon monomer other than ethylene, halogenated styrene, alkyl acrylates, alkyl methacrylates, N,N-methylene-bis-acrylamide, dialkenyl oxalates, diallyl phthalate, ethylene glycol dimethacrylate, triallyl cyanurate, diallyl maleate, diallyl fumarate, triallyl melamine, dialkyl maleates and dialkyl fumarates to form a cross-linked polyethylene copolymer.

40. A process according to claim 39 in which said material is a polymerizable ethylenically unsaturated hydrocarbon monomer.

The Lawton et al. (hereafter Lawton) reference describes the irradiation of various polymers and lists those which became cross-linked and those which became degraded. The former include:

Polyacrylic esters	Natural rubber
Polystyrene	GRS
Polyesters	Butadiene-acrylonitrile copolymers
Nylon	Neoprene-W
Polyethylene	Neoprene-GN
Chlorinated polyethylene	Polydimethylsiloxanes
Chlorosulphonated polyethylene	Styrene-acrylonitrile copolymers

Lawton also teaches:

A number of other polymer mixtures, co-polymers, and polymer monomer mixtures have also been found to become cross-linked as a result of irradiation. Although the mechanism of the process is not well established in each of the above examples, some general statements covering possible mechanisms can be made. These, however, will be reserved for future publications.

Brophy discloses the use of a peroxy compound (benzoyl peroxide) in an irradiation polymerization of polyethylene monomer materials.

Cole teaches the desirability, in certain instances, of conducting the irradiation of polymeric materials in an inert atmosphere in order "to minimize oxidation by atmospheric oxygen."

Res judicata

The Board affirmed the rejection of claims 2–6, 8, 12, 17, 20, and 48 on the ground of res judicata, citing *In re Rainer*, supra. It reasoned that the reference to graft copolymers in the appealed claims was insufficient to impart the necessary "substantial or critical distinction" from the adjudicated claims. The Board noted, without much elaboration, that a changed characterization of the *product* would create no distinction in the process. "The process of claims 39 and 40 of the prior application * * * did not become a new process because appellants changed the label of the product which results from the irradiation * * *." Claims 5, 6, and 48, directed to irradiation in an atmosphere free of oxygen, were not, in the Board's opinion, different enough from the adjudicated claims to avoid res judicata, inasmuch as "the prior art well appreciated the desirability of excluding oxidizing gases during irradiation * * *."

[1] We have recently restricted the application of res judicata in ex parte patent cases. *In re Herr* (Patent Appeal No. 7751, decided May 11, 1967), 54 CCPA —, — F.2d —, — USPQ —. We, therefore, apply that doctrine herein only to the extent of precluding consideration of reargument of the issue of the obviousness, in view of Lawton, the preparation of the cross-linked polymers of the earlier case by the process there disclosed, as discussed in the next section of this opinion.

Obviousness

The Board affirmed the rejection of claims 2, 8, 12, 17, and 20, as obvious in view of Lawton.

[2] Appellants' essential challenge to this decision is based on their characterization of the compounds here involved as *graft* polymers. The Lawton reference makes no mention of graft polymerization. The question, of course, is whether this makes a difference. We think not.

The compounds under discussion in this case were involved in the earlier case. Their properties, of course, have not changed. [3] Appellants seem to urge that their denomination as graft polymers somehow imparts unobviousness to both compounds and process. We think that this contention must fail because the obviousness of neither is properly controverted. Appellants do not contend that these are *different* compounds than those which would be within the contemplation of one of ordinary skill with the reference before him nor that the properties thereof would be unexpected. Characterization is not strong enough a peg to support patentability. Even were appellants to have *discovered* that the obvious compounds might properly be designated "graft polymers," they could not prevail.[3] See *De Forest Radio Co.* v. *General Electric Co.*, 283 U.S. 664 (1931).

Appellants urge that claim 20 is patentable over Lawton for the additional reason that it is limited to irradiation "at a temperature of at least the transition point of the polyethylene." They argue:

The Examiner made no attempt to show that Lawton taught the use of such high temperatures but merely alleged that appellants did not show that the temperature was critical * * *. The issue is not whether the higher temperature is taught to be critical by appellants but whether the higher temperature would be obvious in view of Lawton. There is no suggestion in Lawton of using such high temperatures.

We cannot agree. [5] Criticality must be established before unobviousness can be predicated on the selection of a temperature within the range disclosed by the reference.

Claims 3 and 4, rejected as obvious in view of Lawton and Brophy, concededly stand or fall with claim 2. Accordingly, their rejection is affirmed.

We, therefore, affirm the rejection of claims 2, 8, 12, 17, and 20 for generally the same reasons that we gave in the earlier case.

Claims 5, 6, and 48 were rejected as obvious in view of Lawton and Cole. Appellants urge that the limitations in these claims, viz, a requirement for irradiation "in an inert fluid atmosphere," "in a vacuum," and "in an inert gas atmosphere," render them unobvious.

Appellants' specification teaches that ozone has an adverse effect on polyethylene and its graft copolymers and that it is therefore "frequently desirable" to conduct the irradiation in an inert gas atmosphere and "sometimes desirable" to conduct it in a vacuum. Cole teaches that "in certain instances" irradiation in an inert atmosphere is desirable to minimize oxidation by atmospheric oxygen. We believe

[4] [3] Appellants assert that the Patent Office is bound by its tacit admission and the holding of the court in *Magat* v. *Ladd*, 143 USPQ 186 (D.D.C. 1964). There the court observed that the Patent Office had "tacitly conceded" the distinction between graft polymers and cross-linked polymers. The court held that Lawton in no way suggests graft polymers nor is the process disclosed capable of producing them. The evidence in that case apparently showed that cross-linked and graft polymers are mutually exclusive entities. We are not here so impeded, having before us the contrary assertions of both appellants and Patent Office. We have recently emphasized the importance of the identity of the records when the preclusive effect of earlier litigation between the same parties is urged. *In re Herr*, supra. A fortiori, divergent records *and different parties* forbid the attribution of any preclusive effect. Appellants' "additional" argument, for the patentability of claim 17, based on *Magat*, therefore fails.

Cole's teaching would make obvious the utilization of either an inert atmosphere or a vacuum in a process for the irradiation of polyethylene. The relevancy of Cole's teaching here is in the disclosure of the desirability of irradiation *in the absence of oxygen.* We therefore attach little importance to Cole's failure to mention the use of a vacuum.

We also feel that the criticality of the use of a vacuum is questionable. The language of the specification as a whole certainly would not lead one to think that the nature of the ambient atmosphere constituted a critical part of appellants' invention. "Good ventilation," in fact, is mentioned as an alternative to the inert gas or vacuum. We affirm the rejection of claims 5, 6, and 48 for obviousness.

Inadequate disclosure

Claims 2–6, 8–12, 17, 20, 48, and 57–59 were rejected on the ground that the disclosure was inadequate to support them. Our affirmance of the obviousness rejection makes it necessary to discuss only claims 9–11 and 57–59.

The rejection on inadequate disclosure was made by the Board under Rule 196(b). The Board directed attention to the following portion of appellants' specification:

> Instead of mixing polyethylene with any of the above materials, it is also possible to employ grafted polymers, wherein ethylenically unsaturated monomers are grafted to polyethylene. Suitable monomers for grafting purposes include isoprene, cyclopentadiene, styrene, α-methyl styrene, alkyl substituted styrenes, such as O-vinyl toluene, p-vinyl toluene, m-vinyl toluene, and p-ethyl styrene, dialkenyl benzenes, e.g., para-divinyl benzene, ring halogenated styrenes, such as o-chlorostyrene, p-chlorostyrene, 2,4-dichlorostyrene and 2,6-dichlorostyrene, etc. The hydrocarbon monomers are preferred for grafting purposes.
>
> Also, there can be used monomers such as alkyl acrylates and methacrylates, e.g., methyl acrylate, ethyl acrylate, methyl methacrylate, butyl acrylate, octyl acrylate, butyl methacrylate, octyl methacrylate, N,N-methylene-bis-acrylamide, polyallyl esters, e.g., diallyl phthalate, diallyl oxalate, ethylene glycol dimethacrylate, triallyl cyanurate, bis-allyl carbonates, diallyl maleate, and diallyl fumarate, dialkenyl oxalates, e.g., diallyl oxalate, triallyl melamine, dialkyl maleates and fumarates, e.g., diethylmaleate and diethyl fumarates, etc.

Appellants' examples include descriptions of the irradiation of polyethylene bottles coated with various monomers. It is noted that, when ethylene glycol dimethacrylate was used, "The coating solidified but did not wet the polyethylene" and that "a readily peelable coating was formed." The parties agree that no graft copolymer was formed in this example. Other examples specifically refer to the product of irradiation of p-divinyl benzene and of styrene as graft copolymers. (A claim directed to the latter was allowed.) Examples are also given of the irradiation of about half a dozen other monomers without any reference to the formation of graft copolymers. The rationale of the rejection is stated in the Solicitor's brief:

> The rationale of the above noted rejection is adequately stated by the Board of Appeals * * *. Essentially, it is based on the fact that, although the present specification catalogs a large number of monomers * * * which can be irradiated with polyethylene to form graft cross-linked copolymers, that catalog of monomers includes ethylene glycol dimethacrylate which further on in the specification * * * is shown *not* to form a graft cross-linked copolymer * * *. Consequently, the Board properly concluded that the disclosure would be considered adequate as to those monomers actually shown by the examples (or otherwise in the original disclosure) to form graft cross-linked copolymers with the polyethylene * * * but inadequate as to any other monomers or the very broad category of "polymerizable ethylenically unsaturated hydrocarbon monomers," which include monomers such as vinyl acetylene not even mentioned in the appellants' catalog of monomers.

[6] The thrust of the inadequate disclosure rejection is that appellants have claimed more broadly than they have invented. It is maneuvered into the shadow, at least, of section 112 by the observation that the specification gives no indication whether these monomers for which there is no specific example will behave on irradiation like styrene, which forms a graft copolymer, or like ethylene glycol dimethacrylate, which does not.

[7] The adequacy of the disclosure is a function of the nature of the disclosure. *In re Cavallito*, 48 CCPA 720, 282 F.2d 363, 127 USPQ 206 (1960). In chemical cases, important considerations include the type of reactions, the state of the art, the representative nature of the examples, and the breadth of the claims. The question which must be asked in every case is whether the claims are, in fact, reasonable definitions of the inventions disclosed.

[8] The present case is unusual in that appellants' specification is the evidence of its own inadequacy. The Board properly relied upon it. We think the Board properly rejected claims 9–11 for inadequate disclosure. Each of those claims includes several polyallyl esters. But the only polyallyl ester whose irradiation is reported did not form a graft copolymer. We, therefore, affirm the rejection of claims 9–11.

We think the Board erred in its affirmance of the rejection of claims 57–59. (Claim 57 is quoted above.) These claims are said by appellants to be drawn to those classes of compounds for which working examples were provided. The Board did not agree that working examples had been provided. Apparently because of inconsistency in the specification, the Board refused to infer the production of graft copolymers in the examples of polyethylene-monomer irradiation. We feel that a fair reading of the specification as a whole demands such an inference. The specification states, as the introduction to its catalog of monomers, that "it is often possible to employ grafted polymers." It then gives examples of monomer irradiation, making clear in one example that a graft copolymer was not formed. It seems clear to us that the specification as a whole implies the production of graft copolymers in each example where there is no contrary indication. We therefore reverse the rejection of claims 57–59 on the ground of inadequate disclosure.

Claims 57–59 were also rejected for the presence therein of Markush groups of diminished scope in relation to the Markush group of claim 9. Since we have affirmed the rejection of claim 9 there is no longer a basis for this objection and we reverse this rejection.

Claims refused entry

Claims 49–56, which were presented after final rejection for the purpose of provoking an interference with a patent[4] from which they were copied with modifications, were refused entry by the Examiner for inadequate support. Appellants' brief delineates the issue:

> The only issue as to support is whether the application discloses the sequence of three method steps called for by claims 49–56 (R. 35). These three method steps in order are:
>
> (1) Preparing an intimate mixture of polyethylene with the monomer.
> (2) Preparing a shaped article from the mixture; and
> (3) Irradiating the shaped article.

[4] Patent No. 3,079,312 to Alsys, Feb. 26, 1963, to E. I. du Pont de Nemours and Company, assignee.

More precisely, the question is whether appellants' specification discloses the irradiation of a shaped intimate mixture of polyethylene and monomer.

[9] Appellants point to the disclosure of the irradiation of polyethylene-monomer *blends* of a certain thickness and argue that the irradiation of a sheet is thus disclosed. And a sheet, in appellants' opinion, is a "shaped article." It seems to us that the essence of appellants' argument is that all polymer-monomer mixtures, since necessarily of *some* thickness, constitute shaped articles. We do not believe that "shaped" has this minimal meaning in appellants' claims. We could not attribute any significance to the second step—"preparing a shaped article from said mixture"—if all mixtures were inherently shaped articles.

Appellants also urge us to consider the entire teaching of the specification, particularly certain examples allegedly disclosing the irradiation of polyethylene-*polymer* blends, and to imply in it a teaching of interchangeability of the polymers and monomers. In our reading of the specification we find no such implication. The rejection of claims 49–56 is affirmed.

Summary

The rejection of claims 2–6, 8–12, 20, 48–56 is affirmed. The rejection of claims 57–59 is reversed. The decision of the Board is modified.

MODIFIED.

WORLEY, *Chief Judge*, and ALMOND, *J.*, concur in the result.

MARTIN, *J.*, participated in the hearing of this case but died before a decision was reached.

PATENT SUITS

Notices under 35 U.S.C. 290; Patent Act of 1952

2,526,529, Arrighini and Sickle, PREFABRICATED WALL FORM; **3,150,430**, A. Arrighini, FORM STRUCTURE WITH TIE ROD, **filed** Mar. 10, 1967, D.C., E.D. Mich. (Detroit), Doc. 29677, *Rocform Corporation* v. *Kwik-Lock Form Company*. Consent judgment, Mar. 25, 1968.

2,571,435, A. L. Flamm, GAS FUELED CIGAR LIGHTER, **filed** Nov. 19, 1962, D.C., S.D.N.Y., Doc. 62–C–3806, *Ronson Corporation* v. *Butane Lighter Corporation et ano.* Judgment, Butane Lighter Corporation's counterclaim is dismissed with prejudice, claims of patent are valid and infringed by defendant and its officers, agents, servants, employees and attorneys be and hereby are enjoined from infringing the claims. Consent judgment, defendant American News enjoined, Mar. 29, 1968.

2,815,399, Harte, Jr., Bailey and Bailey, TRAY OR SUPPORT THEREFOR, **filed** Mar. 29, 1968, D.C., E.D. Mich. (Detroit), Doc. 31093, *Francis A. Harte, Jr., Thomas W. Bailey and William H. Bailey* v. *Speedway Ordering Systems, Inc. and Steve Khtaian.*

2,939,707, J. H. Lemelson, PLASTIC TOYS, **filed** Mar. 29, 1968, D.C., S.D.N.Y., Doc. 68–C–1286, *Jerome H. Lemelson* v. *Ideal Toy Corporation.*

2,980,982. (See 3,214,899.)

3,034,225, J. W. Hieronymus, SYPHON PIPE STRUCTURE, **filed** Mar. 22, 1968, D.C., S.D. Mich. (Detroit), Doc. 31055, *The Johnson Corporation* v. *Aeroquip Corporation.*

3,042,899, Kendall, Auer, Bolton and Frielinghaus, ULTRASONIC VEHICLE DETECTION SYSTEM, **filed** Apr. 2, 1968, D.C., N.D. Ill. (Chicago), Doc. 68c596, *General Signal Corporation* v. *Crouse-Hinds Company.*

3,055,988, B. B. Bauer, MAGNETIC PHONOGRAPH PICKUP; **3,077,521**, Ahrens, Kuhn, and Richter, STEREOPHONIC MOVING MAGNET PHONOGRAPH PICKUP; **3,077,522**, Gunter and Anderson, STEREOPHONIC PICKUP CARTRIDGE, **filed** July 22, 1963, D.C.,N.D. Ill. (Chicago), Doc. 63c1306, *Shure Brothers, Inc.* v. *Pickering & Co., Inc. et al.* Consent judgment against defendant Allied Radio Corporation granting injunction, Mar. 15, 1968.

3,064,460, S. J. Dziadulonis, MACHINE FOR REDUCING AND ROUGHENING THE MARGIN OF A SOLE, **filed** Mar. 26, 1968, Ct. of App., Mass. (Boston), Doc. 7102, *Accurate Shoe Machines, Inc.* v. *Industrial Show Machinery Corp.*

3,077,521. (See 3,055,988.)

3,077,522. (See 3,055,988.)

3,111,623, V. S. Thomander, FILAR SUSPENDED INSTRUMENT MOVEMENT, **filed** Dec. 17, 1965, D.C., N.D. Ill. (Chicago), Doc. 65c2144, *Westinghouse Electric Corporation* v. *American Gage and Machine Company.* Complaint and counterclaim dismissed without prejudice, Apr. 2, 1968.

3,119,691, Ludington, Schara and Mohlie, NOVEL FARINACEOUS ANIMAL FOOD, **filed** Apr. 2, 1968, D.C., N.D. Ill. (Chicago), Doc. 68c593, *General Foods Corp.* v. *Carnation Company.*

3,150,430. (See 2,526,529.)

3,154,166, Underwood and Cupolo, SAFETY DEVICE FOR AIRPLANE LOADING TRUCKS, **filed** Sept. 23, 1966. D.C.. E.D.N.Y. (Brooklyn), Doc. 66–C–911, *John Cupolo et ano.* v. *Sky Chefs, Inc.* Order on stipulation dismissing action with prejudice, Mar. 28, 1968.

3,201,548, C. S. Mertler, THERMOSTAT AND TIP-OVER SWITCH, **filed** Apr. 1, 1968, D.C., S.D.N.Y., Doc. 68–C–1314, *Essex Wire Corporation* v. *American Thermostat Corporation.*

3,205,863, N. K. Rhoades, WRITING INSTRUMENT, **filed** Apr. 2, 1968, D.C., N.D. Ill. (Chicago), Doc. 68c594, *The Parker Pen Company* v. *Fisher Pen Company.*

3,214,899, Wininger and Dyer, CORDAGE PRODUCT; **2,980,982**, Costa, Le Boeuf and Lefevre, FIBROUS ARTICLE, **filed** Mar. 27, 1968, D.C., W.D.N.C. (Charlotte), Doc. 2336, *Eastman Kodak Company* v. *Shuford Mills, Inc.*

3,221,616, G. J. Flegel, INTERLOCKING GRATING AND FRAMING SYSTEM FOR TRENCH DRAINS, **filed** Dec. 16, 1966, D.C.N.J. (Newark), Doc. 1245–66, *Josam Manufacturing Co.* v. *Jay R. Smith Mfg. Co.* Consent judgment for permanent injunction, Mar. 29, 1968.

3,243,625, Levine and Palilla, CATHODOLUMINESCENT SCREENS INCLUDING VANADATES OF YTTRIUM, GADOLINIUM OR LUTETIUM ACTIVATED WITH EUROPIUM OR SAMARIUM, **filed** Apr. 1, 1968, D.C., N.D. Ill. (Chicago), Doc. 68c587, *General Telephone & Electronics Laboratories Inc.* v. *National Video Corporation.*

3,251,484, V. de P. Hagan, PORTABLE CONCRETE BATCHING PLANT, **filed** Aug. 17, 1967, D.C., W.D. Tex. (San Antonio), Doc. C–67–79–SA, *Vincent de P. Hagan* v. *Aggregate Plant Products Co.* Consent decree, patent legally issued to plaintiff and defendant has infringed, Mar. 26, 1968.

3,256,857, C. Karras, PRODUCT AND METHOD FOR MAKING ANIMAL BEDDING, **filed** July 18, 1966, D.C.N.J. (Newark), Doc. 724–66, *Conrad Karras and Michael Wood Products, Inc.* v. *Fred O. Faehner et al.* Dismissed on stipulation, Mar. 26, 1968.

3,321,259, Fiterman and Paletz, MULTI-COMPARTMENT ROLL FILE, **filed** Apr. 1, 1968, D.C., S.D.N.Y., Doc. 68–C–1305, *Fidelity File Box, Inc.* v. *Ekon Mfg. Co. et al.*

REISSUES

AUGUST 13, 1968

Matter enclosed in heavy brackets [ ] appears in the original patent but forms no part of this reissue specification; matter printed in italics indicates additions made by reissue.

26,438
MOTOR DRIVEN PUMP
Howard T. White, Upper Moreland Township, Montgomery County, Pa., assignor, by mesne assignments, to Crane Co., New York, N.Y., a corporation of Illinois
Original No. 3,280,750, dated Oct. 25, 1966, Ser. No. 397,102, Sept. 17, 1964. Application for reissue Nov. 2, 1967, Ser. No. 682,697
3 Claims. (Cl. 103—87)

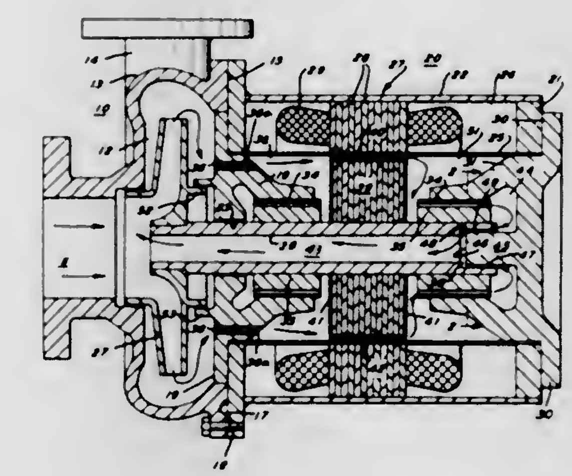

A motor driven pump has a flame trap means in the motor for passage of circulating pumped fluid. There are variable orifices between the rotor of the motor and a sleeve and between telescoped portions of an end enclosure extension and the shaft.

26,439
HYDRAULIC APPARATUS FOR LOCKING A SIDE SHIFTABLE EXCAVATOR
Elton B. Long, Burlington, Iowa, assignor to J. I. Case Company, Racine, Wis., a corporation of Wisconsin
Original No. 3,304,100, dated Feb. 14, 1967, Ser. No. 450,114, Apr. 22, 1965. Application for reissue Jan. 4, 1968, Ser. No. 698,068
3 Claims. (Cl. 280—456)

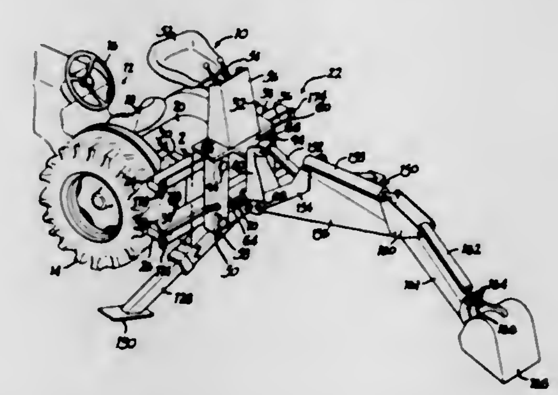

A side shiftable backhoe having a fixed frame defining vertically spaced rails each having opposed vertical bearing surfaces and a mobile frame supported by said rails. The mobile frame is supported on the upper surface of the upper rail and includes first and second groups of engaging means for respectively engaging the opposed vertical bearing surfaces of the respective rails. One group of engaging means is hydraulically movable to clamp the respective rails between cooperating engaging means.

26,440
AUTOMATIC CARTON CLOSING MACHINE
Winton Loveland, Freeport, and Saul Warshaw, New York, N.Y., assignors to The Loveshaw Corporation, Farmingdale, N.Y., a corporation of New York
Original No. 3,236,022, dated Feb. 22, 1966, Ser. No. 219,212, Aug. 24, 1962. Application for reissue Nov. 6, 1967, Ser. No. 682,702
25 Claims. (Cl. 53—75)

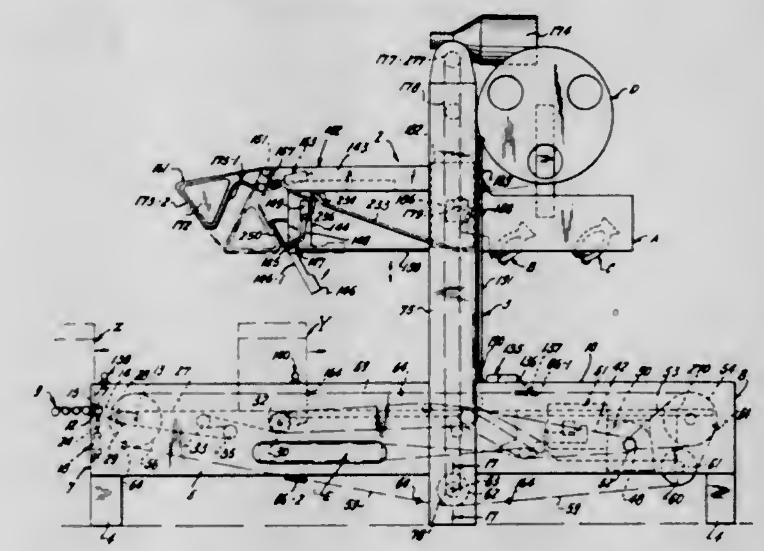

The present invention pertains to automatic carton closing machines. This machine folds down and inward the upwardly-extending front and rear flaps of a series of successive open-top cartons of random size to closed lateral positions so as to be lapped by downwardly and inwardly folded side flaps for securing the folded flaps together in carton closing positions. Such automatic machine embodies a lateral conveyor mechanism having an entrance end and a discharge end and defining therebetween a path of forward advance of carton travel along which the conveyor mechanism moves the cartons successively in spaced apart relation. Along this path is located a flap folding and sensing station where each carton is caused to pause for folding down and inwardly the upwardly extending front end flap. This flap folding operation is performed by an elevating head structure which is in an upper position as each carton is advanced to the station and which then descends to the top of the pausing carton to effect the front flap folding operation. This elevating head also carries rear flap folding mechanism to fold the upstanding rear flap downward and forward, and then it causes the side flaps to be folded over these folded end flaps for effecting the carton top closure which may be given by equipment of the machine a permanency, such as by applying adhesive tape thereover or other ways of securing the flaps together.

26,441
METHOD OF PRODUCING RIMMED STEEL
William D. Poole, Center Valley, Pa., assignor, by mesne assignments, to Bethlehem Steel Corporation, a corporation of Delaware
No Drawing. Original No. 3,219,438, dated Nov. 23, 1965, Ser. No. 226,735, Sept. 27, 1962. Application for reissue July 11, 1966, Ser. No. 569,768
8 Claims. (Cl. 75—56)

1. A method of manufacturing a rimming type steel comprising:

(a) melting a heat of steel and tapping the molten metal into a ladle,

(b) adding to the molten metal in the ladle a solid oxidizing agent,
(c) adding to the molten metal in the ladle aluminum in an amount no more than sufficient to combine with substantially all of the oxygen in said oxidizing agent,
(d) and teeming the treated metal into [ingot] molds.

26,442
HOISTING FORK
Glenn G. Dunbar, Toledo, Ohio, assignor to The D & M Equipment Company, Toledo, Ohio, a corporation of Ohio
Original No. 3,239,072, dated Mar. 8, 1966, Ser. No. 400,428, Sept. 30, 1964. Application for reissue Nov. 22, 1967, Ser. No. 689,740
4 Claims. (Cl. 294—67)

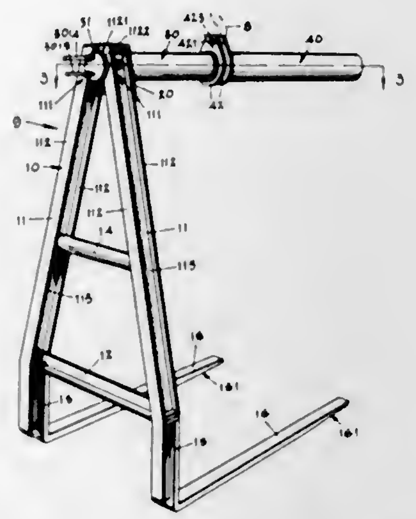

A hoisting fork adapted for manipulation by a hoisting machine and having a hoisting machine connecting means that may be power actuated and controllably operable to advantageously vary the point of connection of the fork and hoisting machine and thereby the relation of the line of lift effort exerted by the hoisting machine through the hoisting fork with respect to the center of load mass to produce tilting of the fork favorable to loading, load carrying and load discharging.

PATENTS

GRANTED AUGUST 13, 1968

GENERAL AND MECHANICAL

3,396,406
AQUATIC APPAREL
Calvin A. Gongwer, Glendora, Calif., assignor, by mesne assignments, to Innerspace Corporation, Glendora, Calif., a corporation of California
Filed Apr. 21, 1966, Ser. No. 544,134
9 Claims. (Cl. 2—2.1)

An apparatus, formed of a sheet like, flexible and stretchable material, to be wrapped around selected areas of the body preferably in an overlapping and tightly fitting fashion and secured without the use of mechanical fasteners to certain members of the body to provide an aquatic apparel having insulative qualities.

3,396,407
COAT COLLAR CONSTRUCTION
Davis Abramson, 111 Franklin Ave., New Rochelle, N.Y. 10805
Filed July 19, 1966, Ser. No. 566,424
6 Claims. (Cl. 2—98)

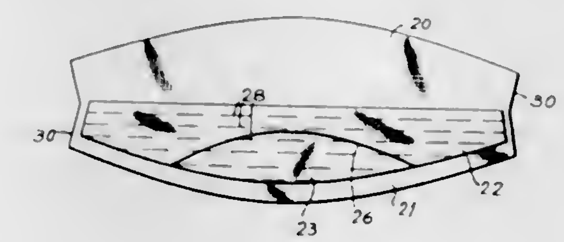

A coat has a coat collar comprising an undercollar, a top collar, and a stiffening canvas which is cut on the bias. The undercollar is made of the regular coat fabric instead of flannel, the top collar and the undercollar being a single piece of the coat fabric folded at the free edge of the collar between the top collar and undercollar, and thereby eliminating the relatively long hand-sewn seam usually required between the top collar and the usual flannel undercollar. The canvas is itself folded at the free edge of the coat collar where the coat fabric is folded in order to provide a double thickness of canvas. One of the two folds of canvas is nearly as large as the adjacent fold of coat fabric. The other is cut away at its free edge over an area corresponding to the stand portion of the collar, so that the collar when folded around the stand portion, is stiffened by a double thickness of canvas, whereas the stand portion itself is stiffened by only a single thickness of canvas. A preferred mode of stitching the parts is also described.

3,396,408
HAT
Roy E. Enger, Wheaton, Ill., assignor to Sears, Roebuck and Co., Chicago, Ill., a corporation of New York
Filed May 4, 1967, Ser. No. 636,200
7 Claims. (Cl. 2—183)

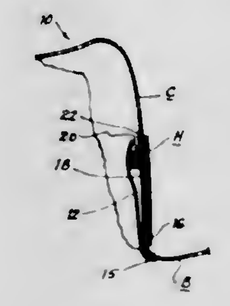

A hat construction providing ready convertibility from one size to a smaller size or from one head shape to another. This is accomplished by securing to the halo band within the hat (the moistureproof band interposed between the sweatband and the crown) adjacent its free edge a strip of resilient material such as foam rubber. To reduce the effective size, the halo band is turned over on itself, bringing the resilient strip down adjacent the brim level. As a modification, by securing the resilient strip only to the sides of the halo band, a hat may similarly be converted from a more round to a less round shape. As a further modification, the resilient strip may be discontinuous, so that selected portions may be turned down, to modify the size and/or shape in certain portions of the periphery.

3,396,409
ARTIFICIAL HEART VALVE
Denis Graham Melrose, London, England, assignor to National Research Development Corporation, London, England, a British company
Filed Dec. 9, 1965, Ser. No. 512,695
Claims priority, application Great Britain, Dec. 31, 1964, 53,104/64
12 Claims. (Cl. 3—1)

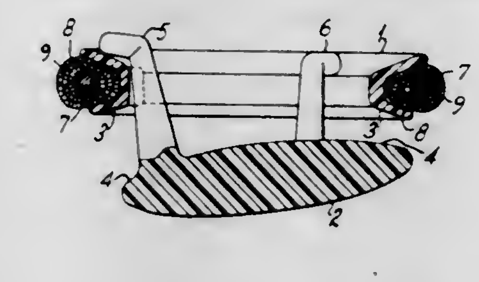

1. A one-way fluid control valve adapted for actuation by a reversal of fluid flow which comprises, a lenticular-shaped valve closure member having at least two well-tapering guide members projecting outwardly from one

of its faces, at least one guide member projecting further than another, and a ring-member which surrounds at least part of said guide members the surface of the ring-member adjacent said one face of the closure member being adapted for engagement with a seating portion of said face so as, in operation, to effect closure of the valve, said guide members being so shaped as to provide by abutment with said ring-member limitation of movement of said closure member away from said seating portion of said ring-member.

3,396,410
STERILIZER FOR USE WITH WATER CLOSETS
Lysle B. Gray, Baltimore, Md., assignor to Brunswick Corporation, a corporation of Delaware
Filed May 25, 1966, Ser. No. 552,925
10 Claims. (Cl. 4—40)

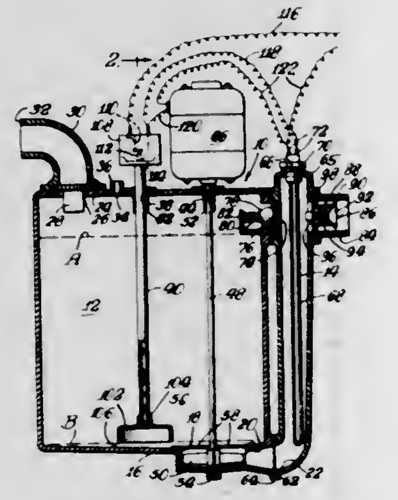

1. A controlled discharge sterilizer for use with water closets for sterilizing a liquid mixture having organic wastes therein comprising: a housing divided into a tank for receiving said liquid mixture and a sterilizing chamber for sterilizing said liquid mixture; means providing a continuous flow path for said liquid mixture and including said tank and said sterilizing chamber; pump means for circulating said liquid mixture in said continuous flow path; heating means associated with said sterilizing chamber for sterilizing said liquid mixture as it passes in said continuous flow path thru said sterilizing chamber by heating said liquid mixture to a sufficiently high temperature such that harmful bacteria contained in said liquid mixture are destroyed and/or neutralized; and means in said flow path normally maintaining said liquid mixture in said flow path and responsive to the attainment of said temperature for discharging said liquid mixture from said sterilizer.

3,396,411
AUTOMATIC STEAM BATH WASHER AND DRYER APPARATUS
Angelo Vieceli, 24429 Shadeland Drive, Newhall, Calif. 91321
Filed May 26, 1966, Ser. No. 553,196
6 Claims. (Cl. 4—164)

1. An automatic steam bath, washer, and dryer apparatus, comprising in combination: cabinet means in which a person may be seated; outlet manifold means in said cabinet for spraying liquid on a person within the cabinet; water inlet means coupled to said manifold means for conducting water under pressure to said manifold means during a first predetermined time period; steam generating means in said cabinet coupled to said water inlet means for introducing steam to said manifold means during a second predetermined time period; and electrical control means coupled to said inlet means and said steam generating means for sequentially operating said steam generating means and said inlet means on a pre-selected timed basis defining said first and second predetermined time periods, whereby said inlet means is operable to conduct water to said manifold means in response to completion of the operation of said steam generating means.

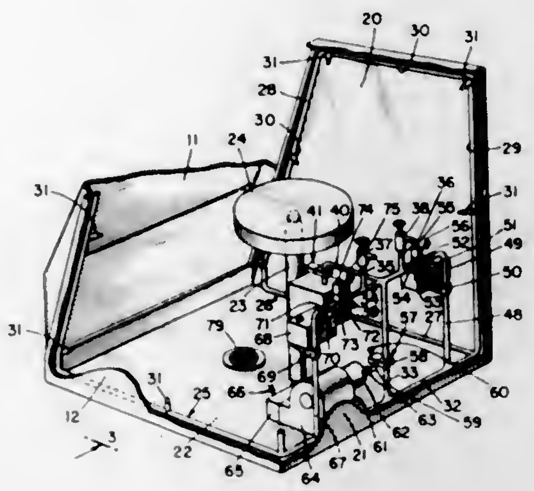

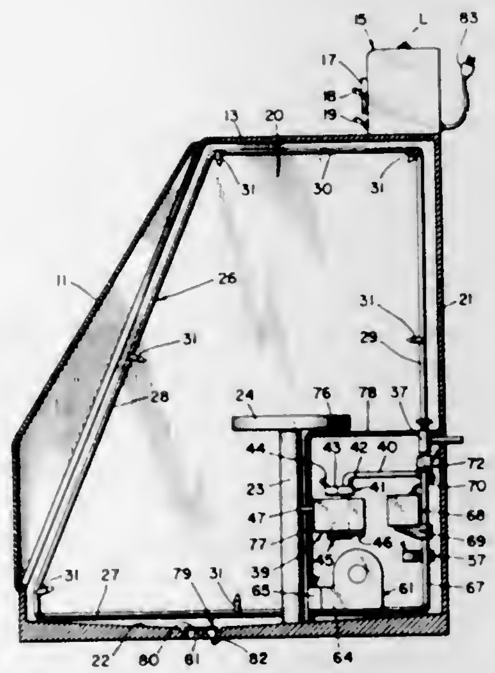

3,396,412
BATHTUB
Lawrence R. Francom, 15277 Sobey Road, Saratoga, Calif. 95070
Filed July 2, 1965, Ser. No. 469,079
9 Claims. (Cl. 4—173)

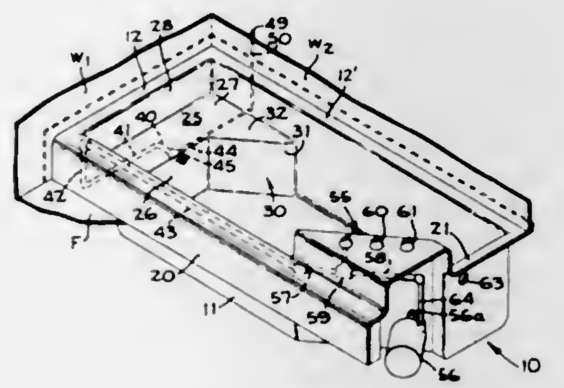

A sunken fiberglass bathtub having a bottom wall with rigidifying galvanized strips disposed in the wall. A pair of upright surfaces integrally formed with the bottom wall and a pair of horizontal surfaces integrally formed with the upright wall provide a head and arm rest. A pump chamber is formed in the interior wall of the tub with faucets being mounted on top of the chamber. A pump within the pump chamber receives water from the tub through a drain in the pump chamber wall and pumps this water through an adjustable valve into an imbedded conduit which leads to a nozzle recessed in the head rest. The pump water is mixed with air in the recessed nozzle through a remote air vent, and is sprayed over the neck and shoulders of the body.

3,396,413
FOOTREST
William Kaufman, 3 Adelphi Court, Edison, N.J.
Filed May 10, 1965, Ser. No. 454,484
1 Claim. (Cl. 4—185)

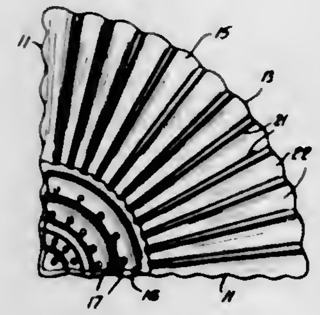

A footrest for use while showering made of rubber or other suitable material and having an angular shape so as to fit in a shower corner. The rest has a cover, a curved outer wall, and two slightly conical side walls, the side walls forming an angle of about ninety degrees with each other. The outer wall and the side walls have upwardly extending grooves and ridges while the top cover has radially extending grooves and ridges extending from an inner soap-carrying recess.

3,396,414
STRETCHER FOR PICKING UP AND TRANSPORT OF INJURED OR SICK PERSONS
Jean Niveau, 72 Rue Bauer, Forbach, France
Filed Sept. 22, 1966, Ser. No. 581,374
Claims priority, application France, Sept. 23, 1965, 32,448
6 Claims. (Cl. 5—81)

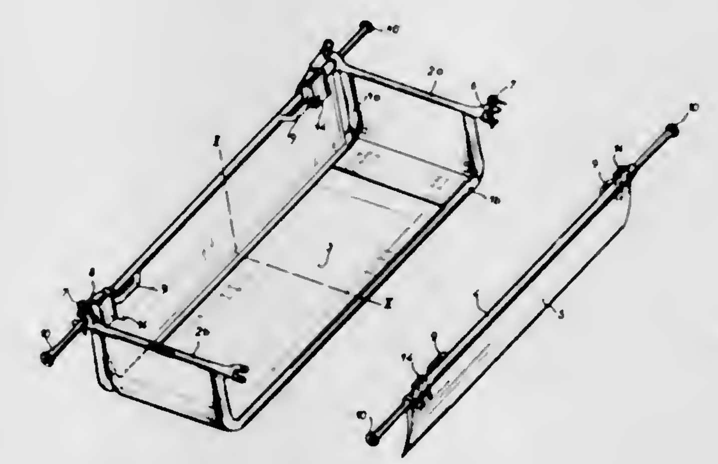

A stretcher comprising a frame and two removable sides is described. The removable sides each include a plate-like element which can be slid from opposite sides under an injured person and the two sides thereafter joined to permit lifting and transporting of the input person without excess movement.

3,396,415
PROCESS FOR THE CONTINUOUS HEAT TREATMENT OF LENGTHS OF TEXTILES AND THE LIKE
Christian August Meier-Windhorst, 2101 Lindhorst 100, Germany
Filed July 24, 1964, Ser. No. 385,089
Claims priority, application Germany, Oct. 14, 1963, A 44,302
9 Claims. (Cl. 8—149.3)

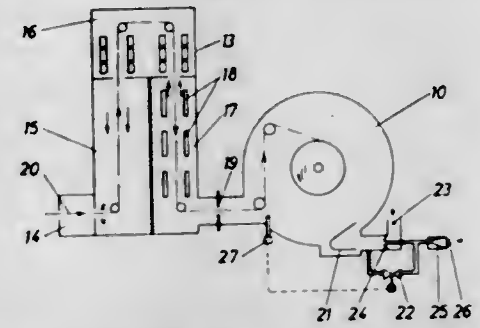

An already treated length of textile material is further treated by condensation pre-heating in a steam-air mixture or pure steam to the saturation temperature of the steam and also heating it by condensation-free heating with a limited steam-developing heat effect.

3,396,416
METHOD OF MAKING A SHOE CONSTRUCTION
Benjamin Sneider, 1750 Commonwealth Ave., Brighton, Mass. 02135
Filed Aug. 24, 1965, Ser. No. 482,162
1 Claim. (Cl. 12—146)

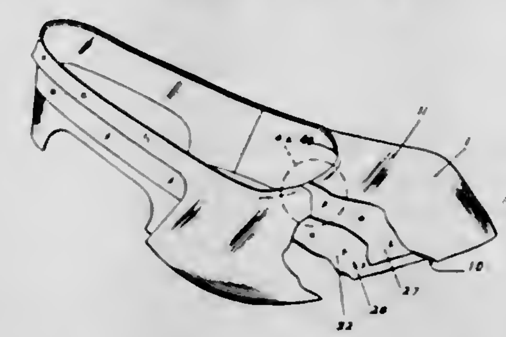

A method of making a ladies' roll-top shoe which has a conventional vamp and rear quarter assembly by forming a second assembly of a vamp lining and rear quarter lining with a doubler attached to the vamp lining. The vamp and rear quarter assembly is attached to the vamp lining along a common inner edge. The vamp and rear quarter assembly is then rolled over the vamp lining to position the doubler intermediate the vamp and vamp lining and the shoe is thereafter lasted in a conventional fashion.

3,396,417
WINDOW WASHER
Richard A. Starr, 7938 Mary Ellen Ave., North Hollywood, Calif. 91605
Filed Sept. 12, 1966, Ser. No. 578,773
6 Claims. (Cl. 15—29)

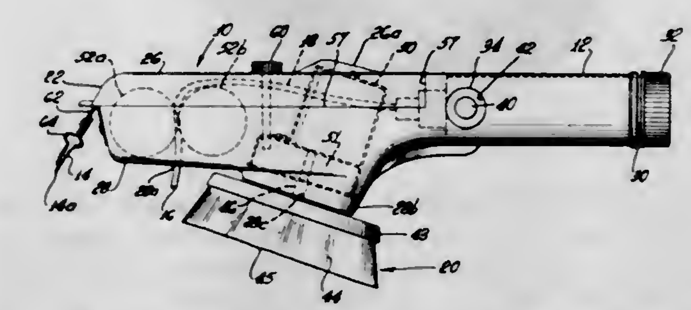

1. A window washing device comprising a housing provided with a handle, a refillable cleaning fluid reservoir

carried by said housing, a fluid outlet line terminating externally of said housing, a manually actuatable means for pumping fluid from said reservoir through said fluid line outlet, a brush rotatably mounted externally of said housing and adjacent to said fluid line outlet, an electric motor carried by said housing adapted to rotate said brush, a source of electrical energy for said motor carried by said housing and a squeegee extending from said housing adjacent to said fluid outlet, a circular brush having bristles with ends terminating in a generally common plane and defining an outer face, the outer face of said brush and the wiping surface of said squeegee lying in the same general plane on the same side of the housing, and said fluid line outlet being interposed between said brush and squeegee and inwardly toward said housing from a plane extending between the face of the brush and the wiping surface of the squeegee.

3,396,418
SHOESHINE MACHINES
William F. Kelly, Rte. 2, Cleburne, Tex. 76031
Filed Oct. 17, 1966, Ser. No. 587,064
8 Claims. (Cl. 15—31)

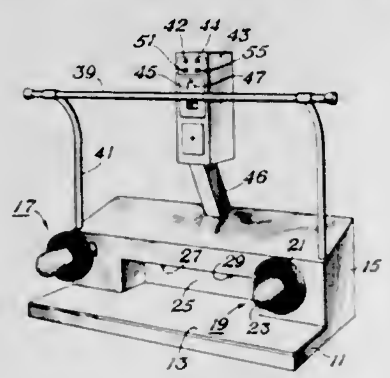

Following is disclosed a shoeshine machine employing two horizontal and rotatable brushes supported in cantilever fashion. Each brush has an inner, large diameter portion and an outer, small diameter portion for preliminary and then final brushing with effective speeds which avoid damage to shoe finishes. Spray nozzles apply selected polish to shoes and a control circuit prevents simultaneous brush and associated spray nozzle operation.

3,396,419
DISPOSABLE SURGICAL SCRUB SPONGE AND DISPENSER
Ferdinand Joseph Richter and Jack Marks Granowitz, Danbury, Conn., assignors to American Cyanamid Company, Stamford, Conn., a corporation of Maine
Filed June 2, 1966, Ser. No. 554,886
6 Claims. (Cl. 15—104.93)

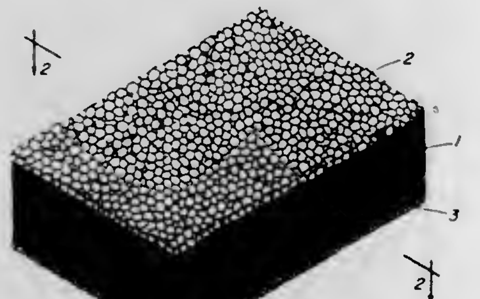

A surgical scrub sponge is described which has two or more zones, one fine pored polyurethane foam the pores being interconnecting and impregnated with a liquid detergent composition containing antibacterial agents. Another zone or preferably two zones on either side of the fine pored foam containing the detergent dispersion have coarser pores of polyurethane so that they exert a scrubbing action when a sponge is used for surgical scrubbing. The detergent dispersion is free from abrasive materials and is of low alkalinity and nonirritating to the human skin. The zone or layer having impregnated detergent dispersion contains sufficient detergent for a surgical scrubbing of five minutes or more.

3,396,420
LITHOGRAPHIC WIPING PAD
Philip A. Mitchell, East Walpole, Mass., assignor to The Kendall Company, Boston, Mass., a corporation of Massachusetts
Filed Jan. 27, 1966, Ser. No. 523,441
5 Claims. (Cl. 15—210)

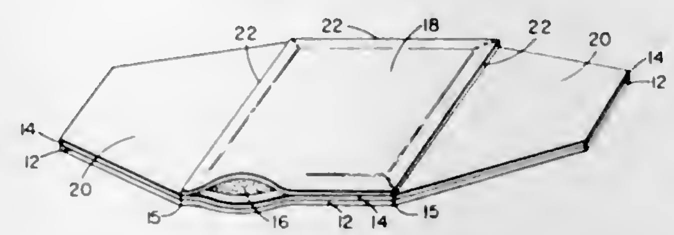

A multicomponent wiping pad suitable for lithographic work is produced by superimposing upon a fluid-spreading sheet of material a fluid-impervious barrier layer, an absorbent layer, and a relatively dense layer of absorbent fibers capable of exerting a mopping or cleaning function. Preferably the two surface layers are sealed to each other around their edges to form a unitary pad, which may have hingedly-connected portions of the bottom layer capable of being folded back on the body of the pad to form a handle. The result is a two-sided wiping pad, one face serving to distribute fluid evenly over a lithographic plate surface, the other face serving to remove excess fluid.

3,396,421
ADJUSTABLE SCRAPER IMPLEMENT
Theodore P. Rade, 3112 N. Rolling Road, Baltimore, Md. 21207
Filed May 5, 1967, Ser. No. 636,295
4 Claims. (Cl. 15—236)

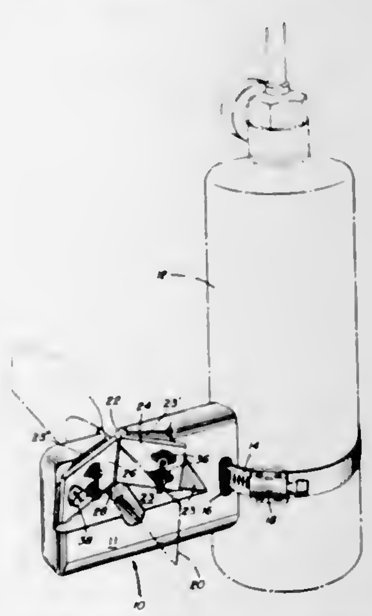

A scraper tool is disclosed for cleaning the blade of a putty knife of adherent burnt paint. Squared, hardened-edge blades are mounted in mutually sloping relationship. The assembly is arranged for strapping to a bottle torch which allows for two-handed action when the blade of the putty knife is drawn through the gap between the blades. An eccentric screw adjustment for setting the blades is provided.

3,396,422
CAR MAT WASHING MACHINE
Russell Haverberg, Minneapolis, Minn., assignor to Russ Haverberg Co., Minneapolis, Minn., a corporation of Minnesota
Filed June 28, 1966, Ser. No. 561,084
3 Claims. (Cl. 15—308)

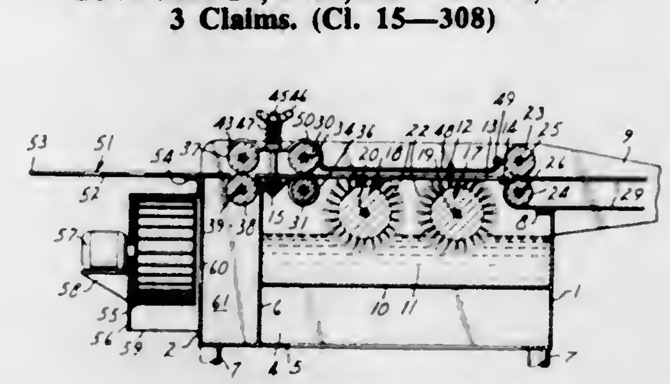

Apparatus for washing and drying automobile floor mats having a mat supporting grating, rotary brush means for conveying liquid to and scrubbingly engaging one side of a mat through the grating, superposed in feed rolls for feeding a mat to the brush means, a pressure plate pivotally mounted over the brush means for movements toward and away from the brush means and for yieldingly holding a mat in a flat condition against the brush means, primary and secondary pairs of superposed out-feed rolls, and a fan. The out-feed rolls impart squeezing action on a mat fed therebetween, the lowermost secondary out-feed roll being disposed in air inlet means to said fan and subject, with the adjacent damp surface of the mat, to drying action of air flowing through the inlet means to the fan.

3,396,423
DEVICE FOR TREATING LARGE AREA SURFACES
Leiv Hope, Kapermoen, Kongsberg, Norway
Filed Feb. 9, 1965, Ser. No. 431,426
10 Claims. (Cl. 15—312)

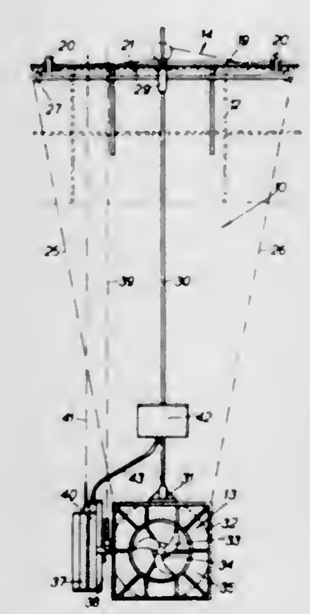

1. An apparatus for treating surfaces of large area which comprises suspension means adapted for mounting adjacent a surface to be treated, means for producing a current of air away from the surface and having an air intake adapted to be arranged in close proximity thereto, and means associated with said air current-producing means for treating the surface by making positive contact therewith, said suspension means supporting said air current-producing means and said surface-treating means and comprising horizontal rail means, yoke means movable on said rail means, movable suspension means connecting said yoke means with said air current producing means for relative vertical movement, tubular guide means pivotally mounted on said yoke means, an elongated member secured at its lower end to said air current producing means with an upper portion thereof slidably mounted in said guide means, whereby said air current producing means may be moved horizontally, vertically and toward and away from said surface; the arrangement being such that a force of reaction resulting from the current of air is supplemented by a suction force arising from the disposition of the intake whereby the combined forces are able jointly to urge the air current-producing means and the surface-treating means against the surface to be treated, while the suction force enables relatively loose matter to be removed from said surface.

3,396,424
DOOR CLOSER
Fred J. Russell, South Gate, and George B. Solovieff, San Clemente, Calif., assignors to Norris Industries, Inc., Los Angeles, Calif., a corporation of California
Filed June 19, 1967, Ser. No. 646,931
12 Claims. (Cl. 16—62)

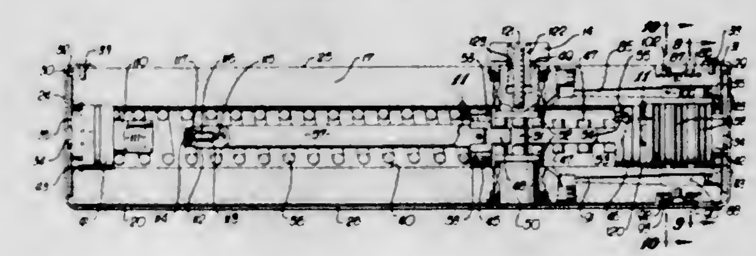

The disclosure concerns a spring-actuated, hydraulically controlled door closer which has two different closing speeds. There is an initial controlled closing speed and a final controlled latching speed. Also included is a backcheck which operates at the full open swing of the door to prevent damage to the mechanism and which releases immediately when the door starts to close.

3,396,425
SPECTACLE HINGE
Richard T. Metcalfe, Sturbridge, Mass., assignor, by mesne assignments, to American Optical Company, Southbridge, Mass., a corporation of Delaware
Filed Dec. 28, 1965, Ser. No. 605,444
10 Claims. (Cl. 16—128)

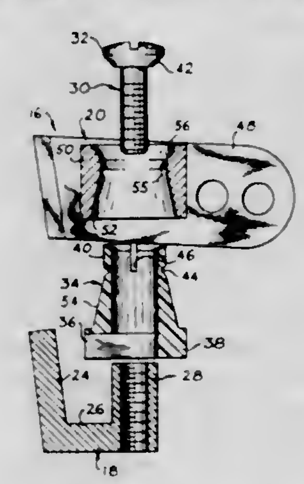

One of a pair of spectacle hinge leaves is provided with an internally threaded pivot post and the other with a hollow internally tapered barrel. Fitted over the pivot post is a resilient conical bushing permanently held there in place by a headed optical screw partially threaded into the post. Assembly of the leaves is effected simply by dropping the internally tapered barrel over the conical bushing and tightening the screw sufficiently to cause its head to flange or upset one end of the bushing partially into the barrel. Disassembly of the leaves requires only loosening of the screw without removal from the post and lifting of the barrel off the bushing.

3,396,426
APPARATUS FOR PRODUCING SAUSAGES
Francis J. Ziolko, Somerville, N.J., assignor to Johnson & Johnson, a corporation of New Jersey
Original application Nov. 26, 1965, Ser. No. 509,865, now Patent No. 3,317,950, dated May 9, 1967. Divided and this application Sept. 29, 1966, Ser. No. 583,033
10 Claims. (Cl. 17—35)

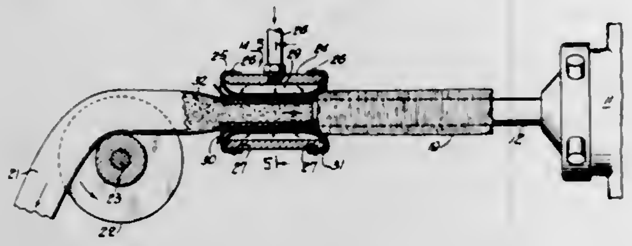

A sausage stuffing apparatus is provided with an improved breaking or friction-producing assembly that is movable to press a casing that is being stuffed against the exterior cylindrical surface of the stuffing horn permitting the application of fully controlled pressure to the casing during the stuffing operation.

3,396,427
BLOW-MOLDING APPARATUS
Antonino Raspante, New York, N.Y.
(157 Heathcote Road, Elmont, N.Y. 11003)
Filed Oct. 23, 1965, Ser. No. 502,978
8 Claims. (Cl. 18—5)

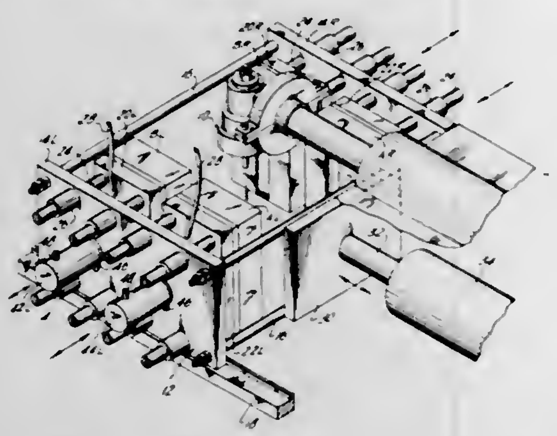

Blow-molding apparatus consisting of a carriage including spaced parallel members each reciprocably supporting a pair of spaced mold section mounting plates for movement toward and away from a registering plate in the other member. The carriage is mounted for reciprocable movement to move each pair of registering plates to and away from a parison head; each pair of plates remaining close on their movement away from the parison head and half-way of the return stroke; each pair of plates separating during the remainder of the return stroke and closing when opposite the parison head; the latter discharging a parison tube while the separated plates move towards it; each pair of plates closing as they reach the parison head; the carriage pausing at the end of each stroke and half-way thereof.

3,396,428
APPARATUS FOR BLOW MOLDING THERMOPLASTIC PLASTICS
Hideo Tahara, 9 Furuishiba 2-chome, Koto-ku, Tokyo, Japan
Filed Mar. 14, 1966, Ser. No. 534,040
5 Claims. (Cl. 18—5)

An apparatus for blow molding thermoplastic materials, comprising a rotating frame connected to two split blow mold halves, a pedestal having upper edges which are slanted symmetrically, the rotating frame being disposed on the pedestal freely movable for rotary and vertical movement, and means for moving one of the split mold halves, below the extruder head, and the other of the split mold halves moving so as to closely contact the former

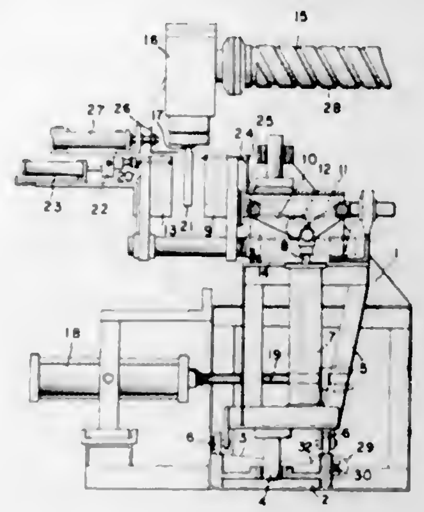

mold half, sealing the thermoplastic material extruded from the extruder within the mold cavity.

3,396,429
SELF-FEED RAM FOR EXTRUSION EQUIPMENT
Paul Geyer, Detroit, Mich., assignor to Uniroyal Inc., a corporation of New Jersey
Filed Aug. 1, 1966, Ser. No. 569,225
12 Claims. (Cl. 18—12)

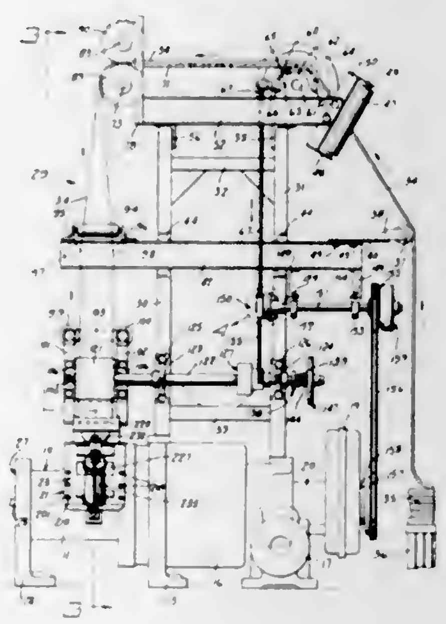

The invention is an apparatus for feeding stock to an extrusion machine wherein a ram operatively mounted on the extrusion machine not only feeds stock to the machine but controls the operation of the entire feeding system for the extruder.

3,396,430
METHOD AND APPARATUS FOR FORMING DOUBLE WALLED CONTAINERS
Robert F. Westcott, Findlay, Ohio, assignor to The Dow Chemical Company, Midland, Mich., a corporation of Delaware
Continuation-in-part of application Ser. No. 306,249, Sept. 3, 1963. This application May 15, 1967, Ser. No. 638,241
5 Claims. (Cl. 18—19)

A method and apparatus for forming double walled containers, such as meat trays and the like, wherein a plug and a mating cavity die engage a pair of preheated plastic sheets, the plug and die engaging a sheet from the opposite direction and progressing toward one another,

wherein vacuum and air pressure are employed to keep the sheets separate in the double walled area. Optionally

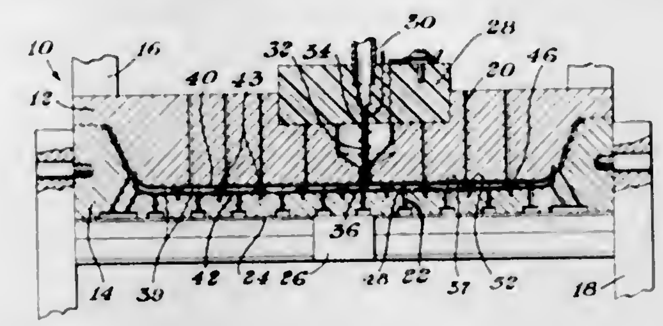

included are ribs for forming reinforcing indentations in one of the walls when this may be desired.

3,396,431
SCREW INJECTOR FOR PLASTIC MATERIAL
Leslie J. Kovach, Clifton, and Bruno V. Menegus, Wayne, N.J., assignors to Modern Plastic Machinery Corporation, Clifton, N.J., a corporation of Delaware
Filed Apr. 7, 1965, Ser. No. 446,268
9 Claims. (Cl. 18—30)

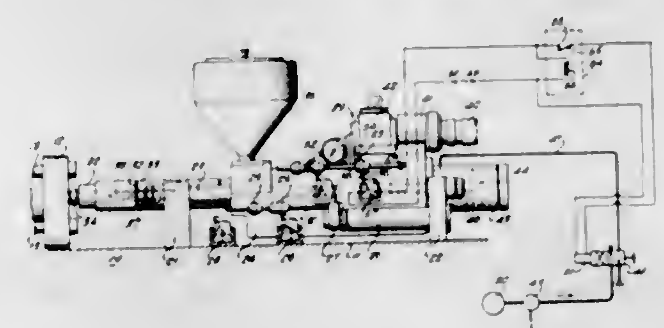

A screw injector includes a rotatable screw which is axially movable in an extruder barrel and is connected to the piston of a double acting hydraulic cylinder. A motor rotates the screw to effect the axial retraction thereof and actuates a switch at a predetermined retracted position which in turn actuates a valve for an adjustable time to introduce a hydraulic fluid into the cylinder to further axially retract the screw a predetermined distance without rotation thereof whereby to withdraw any of the plastic from the extruder nozzle.

3,396,432
CARDING MACHINE DRIVE HAVING ANTI-FRICTION GUIDE MEANS FOR SEPARATING THE OPPOSED REACHES OF CROSSED BELTS THEREIN
Elvin F. Robinson, 1533 S. Patricia St., Gastonia, N.C. 28052
Filed Apr. 8, 1966, Ser. No. 541,296
4 Claims. (Cl. 19—98)

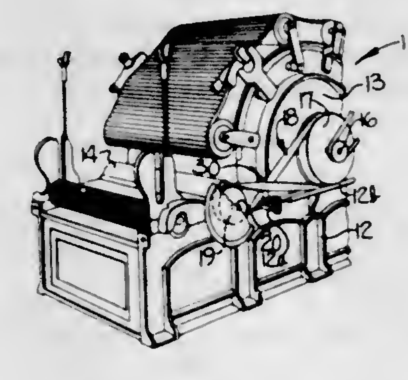

A carding machine having drive means including drive pulleys rotatably connected by an endless crossed belt, a guide disposed between and engaging the opposed reaches of the belt at their point of crossing, and means adjustably securing the guide to the carding machine for vertical and horizontal linear adjustment, and for angular adjustment about a substantially horizontal axis to space apart the reaches of the belt, reduce frictional wear of the belt, and guide the belt in proper tracking relation with the pulleys.

3,396,433
APPARATUS FOR MAKING NON-WOVEN WEBS
William D. Roxlo, Nashville, Tenn., assignor to E. I. du Pont de Nemours and Company, Wilmington, Del., a corporation of Delaware
Continuation-in-part of application Ser. No. 434,591, Feb. 23, 1965. This application June 28, 1965, Ser. No. 470,322
10 Claims. (Cl. 19—156.3)

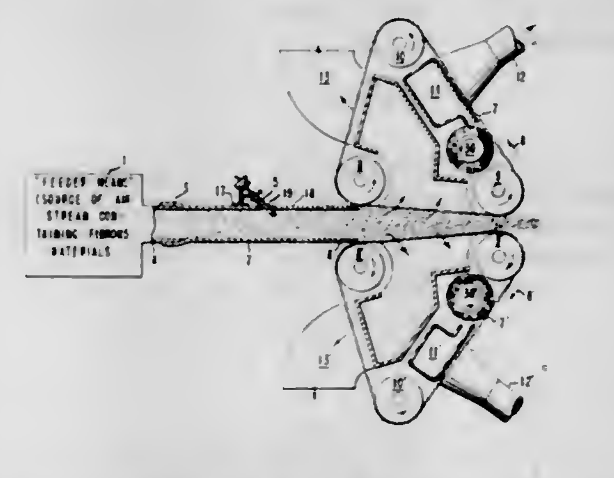

An apparatus adapted for use in manufacturing nonwoven webs of great uniformity and width wherein a connecting duct which carries the fiber-containing air stream from the feeder to the foraminous collector is equipped with baffle means to divert at least the top portion of the air stream so that it flows downward at an obtuse angle and so that one or more portions thereof are diverted further than others yet all portions thereof travel at the same angle at the point of diversion, the level of said baffle means being adjustable in numerous closely spaced areas.

3,396,434
MOLDING FASTENER
Heinrich Overhoff, Lorrach, Baden, Germany, assignor to A. Raymond, Boden, Germany
Filed Dec. 7, 1966, Ser. No. 599,944
Claims priority, application Germany, Dec. 21, 1965, R 42,271
1 Claim. (Cl. 24—73)

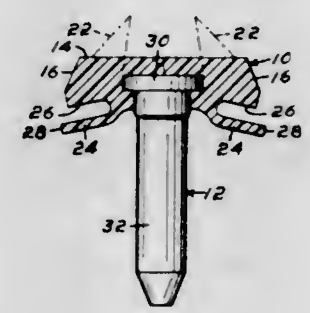

The molding fastener disclosed herein is of two-piece construction, metal and plastic, wherein the plastic head portion includes a means of engaging the metallic shank portion.

3,396,435
BUCKLE WITH AUTOMATICALLY OPERATING POSITIVE RELEASE ACTION
Frank L. Davis, Fort Salonga, N.Y.
Filed May 26, 1967, Ser. No. 644,757
13 Claims. (Cl. 24—78)

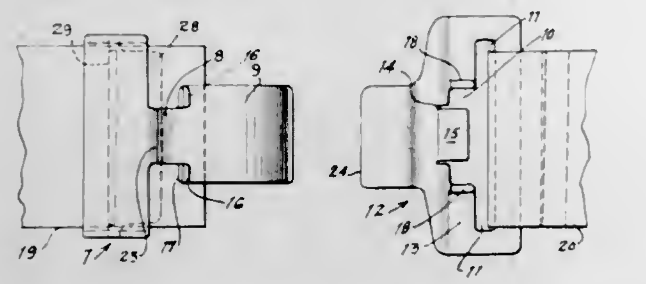

Separable companion plates, one being T-shaped and the other having a key-hole slot formation, interlocking to form the buckle structure, have leverage parts which with relative angular movement of the plates, cooperate to positively force the plates into disconnected relation.

3,396,436
SNAP FASTENER ASSEMBLY
Domenic J. Daddona, Jr., Waterbury, Conn., assignor to Scovill Manufacturing Company, Waterbury, Conn., a corporation of Connecticut
Filed Mar. 2, 1966, Ser. No. 531,257
3 Claims. (Cl. 24—208)

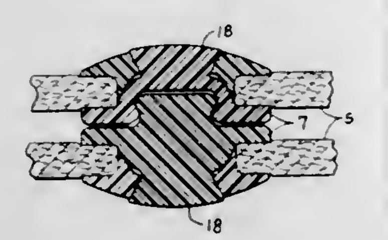

An all plastic snap fastener especially intended for articles of leather or the like has a post projecting away from each of the fastening means, through a ring-like attaching member. The post is riveted over a countersunk recess in the attaching member, and a skirt portion on the attaching member surrounds the post so that when the plastic material of the post expands in the upsetting operation, the leather material will not be wrinkled.

3,396,437
SLIMLINE SAFETY BELT BUCKLE
David William Burleigh, Yateley, England, assignor to Britax (London) Limited, Surrey, England, a corporation of the United Kingdom
Filed Aug. 11, 1967, Ser. No. 659,974
Claims priority, application Great Britain, Aug. 11, 1966, 36,851/66
7 Claims. (Cl. 24—230)

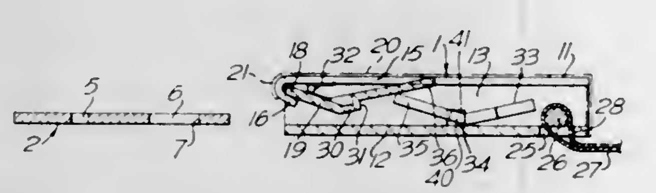

This invention relates to a safety belt buckle of slim outline which is push-button operated and has a housing part adapted to be connected to a length of webbing and a tongue adapted to be connected to another length of webbing, and which is insertable into the housing part, and housing part being a spring biassed latching plate of shallow V section and a release lever of similar section pivotally mounted therein, one edge of the latch plate being pivoted in a retaining lip spaced from the base of the housing part and the opposite edge co-operating with an edge of the release lever, the other opposite edge of which is presented at an opening to the housing.

3,396,438
CLAMP
Robert L. White, 1940 Marsa Drive, Springfield, Mo. 65804
Filed Oct. 22, 1965, Ser. No. 501,638
1 Claim. (Cl. 24—243)

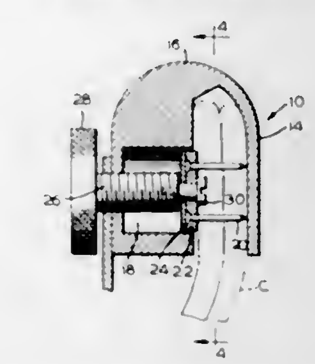

A clamp or pinning device adapted for engaging textile material, such as for fastening baby diapers, having a plurality of needles reciprocally supported in a recessed wall and engageable with an opposed wall to fasten the material. The needles are carried by a disc rotatably supported by a threaded follower.

3,396,439
CLAMP FOR HOSE OR THE LIKE
Erwin L. Schaub, Middle Village, N.Y., assignor to Ideal Corporation, Brooklyn, N.Y., a corporation of New York
Filed Apr. 18, 1966, Ser. No. 543,245
7 Claims. (Cl. 24—274)

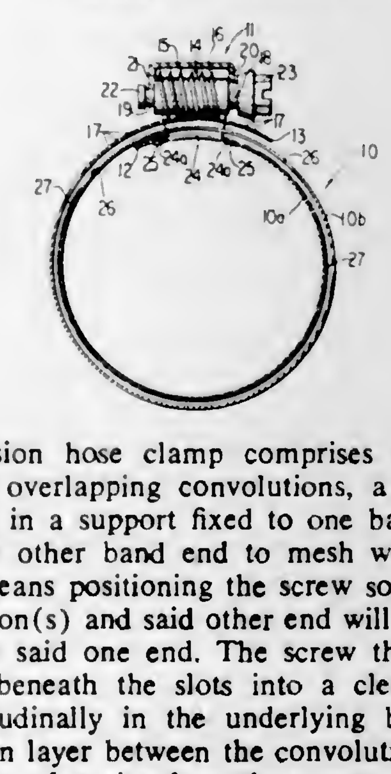

A high-tension hose clamp comprises a long band wrapped into overlapping convolutions, a worm screw held rotatably in a support fixed to one band end, slots formed in the other band end to mesh with the screw thread, and means positioning the screw so that the lapping convolution(s) and said other end will pass between the screw and said one end. The screw thread projects through and beneath the slots into a clearance recess formed longitudinally in the underlying band portion. An anti-friction layer between the convolutions enhances the transmission of tension from the screw.

3,396,440
CLAMPING BAND FOR HOSES
Johannes C. P. van Schendelen, Jac. Perklaan 7, Heemstede, Netherlands
Filed Feb. 6, 1967, Ser. No. 614,164
Claims priority, application Netherlands, Feb. 11, 1966, 6601797
6 Claims. (Cl. 24—279)

A clamping device e.g. for clamping for hoses comprising a band, one end thereof being pivotably con-

nected with a pin of a housing, the other end thereof being pivotally connected with a guide member which is movable in or on a guide path by means of a screw

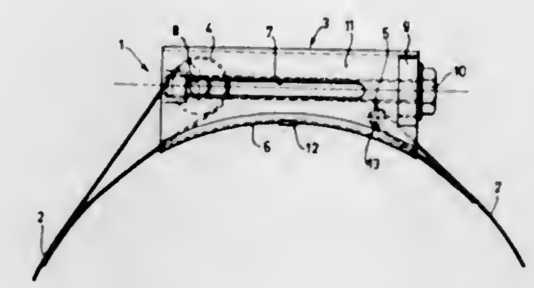

and a resistance plate; and said housing being provided with a bridge part, in order to obtain a uniform clamping round about of clamping band and bridge part.

3,396,441
PROTECTIVE APPARATUS FOR CONCRETE PIPE FORMING MACHINES
Harold G. Robinson, Austin, Tex., assignor to Austin Concrete Works, Inc., Austin, Tex., a corporation of Texas
Filed Oct. 4, 1965, Ser. No. 492,689
9 Claims. (Cl. 25—36)

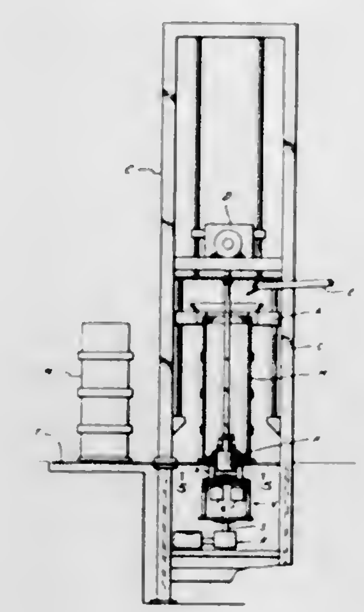

A protective apparatus for use on the vibrating table of a concrete pipe forming machine which includes a cover plate positioned on the vibrating table, a conical distributor plate positioned on the cover plate with its outer edge spaced inwardly from the outer edge of the cover plate and a wiper for wiping mud from the cover plate responsive to rotation of said vibrating table. This abstract is neither intended to define the invention of the application which, of course, is measured by the claims, nor is it intended to be limiting as to the scope of the invention in any way.

3,396,442
LACING GUIDE
Charles G. Gilmore, Meadville, Pa., assignor to FMC Corporation, Philadelphia, Pa., a corporation of Delaware
Filed Dec. 19, 1966, Ser. No. 602,793
6 Claims. (Cl. 28—1)

In a system wherein a running yarn strand is subjected to treatment in a tube-like passageway which has a lacing slot communicating therewith, guides are provided for assuring that the yarn is laced through the lacing slot and the passageway at the beginning of a run and

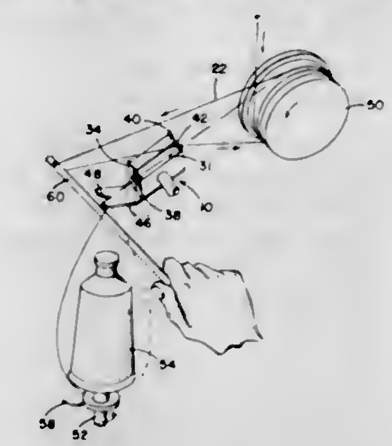

for causing the yarn to re-enter the passageway should it be accidently displaced therefrom during a run.

3,396,443
STRAND TREATMENT PROCESS AND APPARATUS
Robert K. Stanley, Media, Pa., assignor to Techniservice Corporation, Lester, Pa., a corporation of Pennsylvania
Filed Feb. 8, 1966, Ser. No. 525,933
14 Claims. (Cl. 28—1)

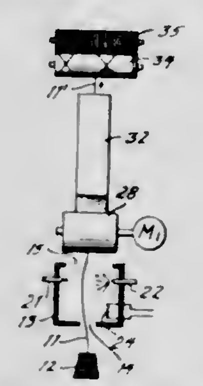

This invention relates to treatment of textile strands, concerning especially pretreatment thereof for crimping, particularly compressive or "stuffer" crimping, or as an initial step therein. Steam or other suitable vapor is applied to the strand from opposite sides, and the strand is conveniently traversed to and fro just ahead of a crimper entrance by increasing and decreasing the force of application thereof alternately from the respective sides.

3,396,444
SIZE BOX HAVING ADDITIONAL PRESSURE ROLLS
Ira L. Griffin, Sr., Charlotte, N.C., assignor to Ira L. Griffin & Sons, Inc., Charlotte, N.C., a corporation of North Carolina
Filed Aug. 26, 1966, Ser. No. 575,411
7 Claims. (Cl. 28—28)

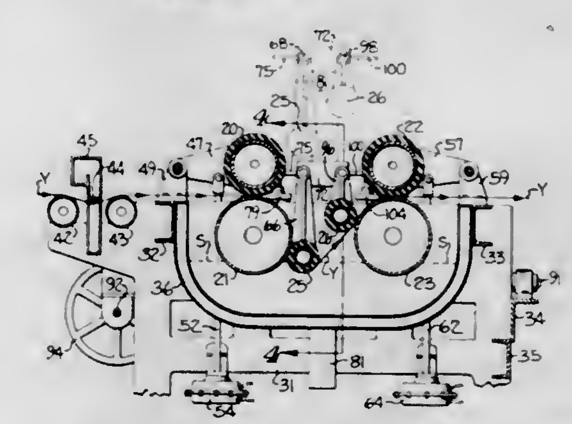

An additional pair of pressure rolls is positioned between the usual lower squeeze rolls of the size box. The

first additional roll acts as a combination immersion and squeeze roll and the second additional roll acts as a combination stripper regulator and squeeze roll.

3,396,445
METHOD FOR TEXTURIZING YARNS
John G. Hopkins, Boonton, and Gerard J. Glacken, Haskell, N.J., assignors to J. P. Stevens & Co., Inc., New York, N.Y., a corporation of Delaware
Filed June 1, 1967, Ser. No. 642,827
5 Claims. (Cl. 28—72)

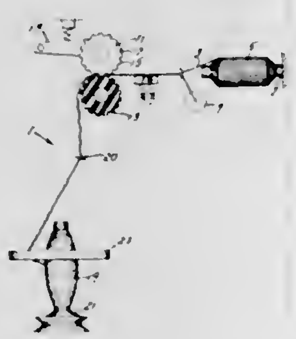

This invention relates to a process for texturizing a material comprising the steps of introducing textile material under controlled tension between a set of opposed surfaces each having alternately depressed and raised areas while said surfaces are in contact under an applied pressure, at least one of said surfaces being resilient; deforming said textile material between said surfaces, removing said textile material from between said surfaces under controlled tension and correlatively controlling the tension and temperature of the material during the deforming step whereby a stabilized coil crimped textile product is produced.

3,396,446
PROCESS FOR REDUCING PILLING IN TEXTILE ARTICLES
Philip W. Eggleston, William Glen, Kenneth W. Hillier, and Ian Marshall, Harrogate, England, assignors to Imperial Chemical Industries Limited, London, England, a corporation of Great Britain
No Drawing. Continuation-in-part of application Ser. No. 147,669, Oct. 19, 1961. This application Sept. 24, 1965, Ser. No. 490,123
Claims priority, application Great Britain, May 31, 1955, 15,545/55
8 Claims. (Cl. 28—76)

1. A process for improving spun yarns of polyethylene terephthalate to reduce the tendency to pilling which comprises treating a material selected from the group consisting of filaments and fibers of polyethylene terephthalate having an intrinsic viscosity of 0.56 to 0.63 to reduce the molecular weight thereof to an intrinsic viscosity between about 0.28 and 0.45 without substantially dissolving said polyethylene terephthalate.

3,396,447
METHOD OF DIFFUSION OF MOLYBDENUM INTO EXTRUDED FERROUS METAL SURFACES OF A PISTON
Erik Frede Christiansen, Sonderborg, Denmark, assignor to Danfoss A/S, Patent Department, Nordborg, Denmark
Filed Jan. 19, 1966, Ser. No. 521,688
Claims priority, application Germany, Jan. 30, 1965, D 46,396
7 Claims. (Cl. 29—156.5)

A method of diffusion of molybdenum into inter-atomic or inter-crystalline interstices of an extruded ferrous metal surface to decrease the coefficient of friction of the surface. Molybdenum or molybdenum-containing powder is kept in contact with the extruded ferrous surface and then the surface with the powder thereon is subjected to heat treatment. Because the extruded surface has been

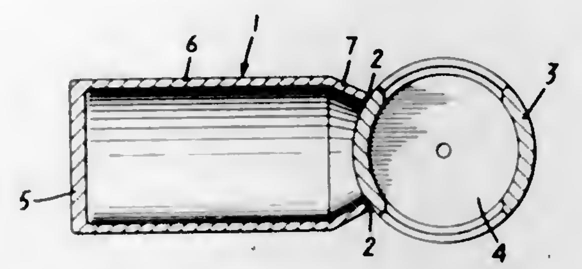

subjected to shear the surface is particularly susceptible to diffusion by molybdenum. The heat treatment may take place in an inert gas atmosphere or in the presence of a reducing gas.

3,396,448
METHODS FOR MANUFACTURE OF FLEXIBLE VALVE ELEMENTS
James W. Kisling III, Houston, Tex., assignor, by mesne assignments, to Schlumberger Technology Corporation, Houston, Tex., a corporation of Texas
Filed Sept. 29, 1965, Ser. No. 491,345
3 Claims. (Cl. 29—157.1)

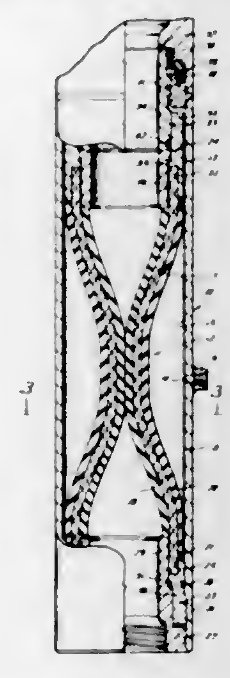

This invention relates to methods for manufacturing new and improved constrictible flexible sleeve members for sleeve-type valves and the like. More particularly, the methods disclosed herein include assembling a plurality of reinforcing strands into a tubular mesh. The central portion of the mesh is then collapsed to draw individual strands relative to one another and into a relaxed position. After securing the ends of the strands, a fluid-impervious flexible sleeve is formed around the tubular mesh to complete the assembly.

3,396,449
METHOD OF CALIBRATING VACUUM ADVANCE MECHANISMS FOR IGNITION DISTRIBUTORS
Andreas Brantner, Stuttgart-Feuerbach, Germany, assignor to Robert Bosch G.m.b.H., Stuttgart, Germany
Filed Jan. 4, 1966, Ser. No. 518,608
Claims priority, application Germany, Jan. 22, 1965, B 80,223
6 Claims. (Cl. 29—173)

A method of adjusting the bias of a return spring in the chamber of a vacuum advance mechanism for ignition distributors, wherein the spring is first placed in the vacuum chamber so that opposite ends of the spring engage respectively a housing and a diaphragm defining the chamber,

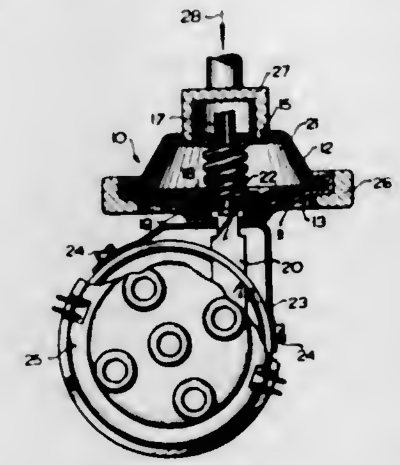

whereafter the housing is deformed to stress the spring in axial direction to thereby adjust the spring bias.

3,396,450
PROCESS FOR MAKING A UNIT CONSISTING OF A TIMEPIECE SPIRAL AND A COLLET
Gabriel Faehndrich, 2824 Vicques, Switzerland, and Marcel Dumont, 10 Chemin du Ble, 2500 Bienne, Switzerland
Filed Mar. 21, 1966, Ser. No. 536,026
Claims priority, application Switzerland, Mar. 19, 1965, 3,883/65; Mar. 23, 1965, 5,692/65
10 Claims. (Cl. 29—178)

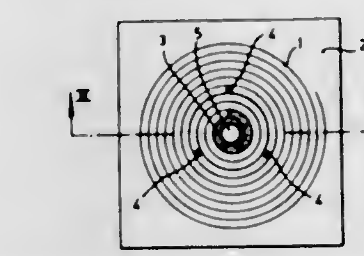

Process for making a balance spring-collet assembly by securing a coiled balance spring having a blade of a given height, filling the space comprised by about the first one and a half coils of the spring with a liquid metal adhering plastic material; allowing the resin to set so as to form a collet in the form of the coils, piercing an opening in the just formed plastic collet and securing the same on the balance staff by passing the staff through the opening which has been pierced.

3,396,451
PRODUCTION LINE FOR STEEL LANDING MATS
Nicholas A. DiMargio, Youngstown, and Isadore L. Silver, Warren, Ohio, assignors to Syro Steel Company, Girard, Ohio, a corporation of Ohio
Filed May 24, 1966, Ser. No. 552,456
2 Claims. (Cl. 29—200)

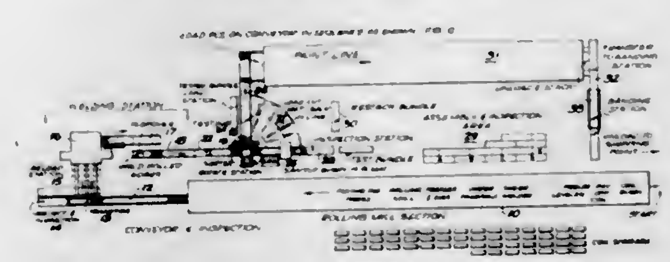

A production line for steel landing mats and the like incorporating a plurality of metal-working devices that progressively forms, shapes and separates the individual landing mats from initially fed coils of steel.

3,396,452
METHOD AND APPARATUS FOR BREAKING A SEMICONDUCTOR WAFER INTO ELEMENTARY PIECES
Katsuo Sato and Yoshiaki Nakamura, Tokyo, Japan, assignors to Nippon Electric Company, Limited, Tokyo, Japan, a corporation of Japan
Filed May 27, 1966, Ser. No. 553,329
Claims priority, application Japan, June 2, 1965, 40/32,600
7 Claims. (Cl. 29—413)

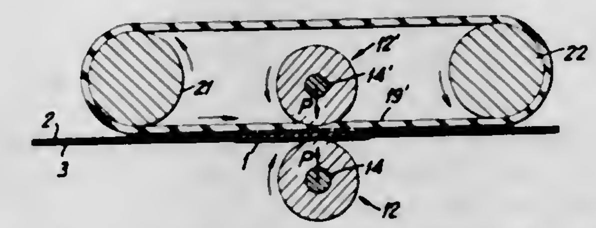

A preliminarily scribed semiconductor wafer is advanced and subjected to pressure between a pair of opposing rollers of differing resiliencies. The softer resiliency roller being contiguous the scribed face thereby causes the wafer to break at the scribe lines.

This invention relates to a method and apparatus for breaking wafers, particularly semiconductor wafers, into elementary pieces.

3,396,453
METHOD OF MAKING A REFRACTORY BRICK
Walter J. Thomas, Sr., Plymouth Meeting, Pa., assignor, by mesne assignments, to International Minerals & Chemical Corporation, Skokie, Ill., a corporation of New York
Continuation of application Ser. No. 478,515, Sept. 8, 1965, which is a division of application Ser. No. 430,865, Feb. 8, 1965, now Patent No. 3,242,889, which is a continuation-in-part of application Ser. No. 232,953, Oct. 25, 1962. This application Sept. 8, 1967, Ser. No. 666,523
1 Claim. (Cl. 29—421)

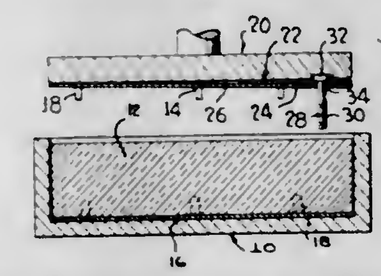

More particularly, the invention relates to method of applying a suspension tab and a headed pin to a refractory brick, and includes supporting the refractory material in a forming mold, inserting the pin through a hole in the tab, magnetically supporting the tab and head of the pin against the flat face of a ram wherein the tab is parallel to the face of the refractory material and then driving the tab and pin toward and against the refractory material and forcing the pin into the refractory material and pressing the tab against the surface thereof.

3,396,454
METHOD OF FORMING OHMIC CONTACTS IN SEMICONDUCTOR DEVICES
James P. Murdock, West Allis, and James E. Schroeder, Greendale, Wis., assignors to Allis-Chalmers Manufacturing Company, Milwaukee, Wis.
Filed Jan. 23, 1964, Ser. No. 339,686
6 Claims. (Cl. 29—494)

1. The method of soldering ohmic contacts in semiconductor devices with a solder alloy which comprises:

(a) plating at least one of the contact surfaces with alternate layers of the respective metals in elemental form and in such proportions as is desired in the

solder alloy, and such that there are from seven to ten total layers of the plated metals;

(b) placing the contact surfaces in intimate contact with the plated layers sandwiched therebetween;

(c) heating the plated layers in a nonoxidizing atmosphere to a temperature above the melting point of the desired alloy;

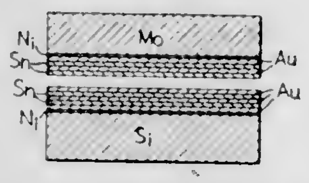

(d) maintaining said temperature until the alternate plated metal layers diffuse and fuse into one another forming the desired alloy in a molten state;

(e) cooling the alloy at a sufficiently slow rate as will cause the alloy to solidify and effect the soldered contact without cracking of solder or contact pieces.

3,396,455
METHOD OF RECOVERING HEAT RECOVERABLE ARTICLES
Hugh Paul Sherlock, Menlo Park, Calif., assignor to Raychem Corporation, Redwood City, Calif., a corporation of California
Filed Oct. 12, 1965, Ser. No. 495,119
17 Claims. (Cl. 29—498)

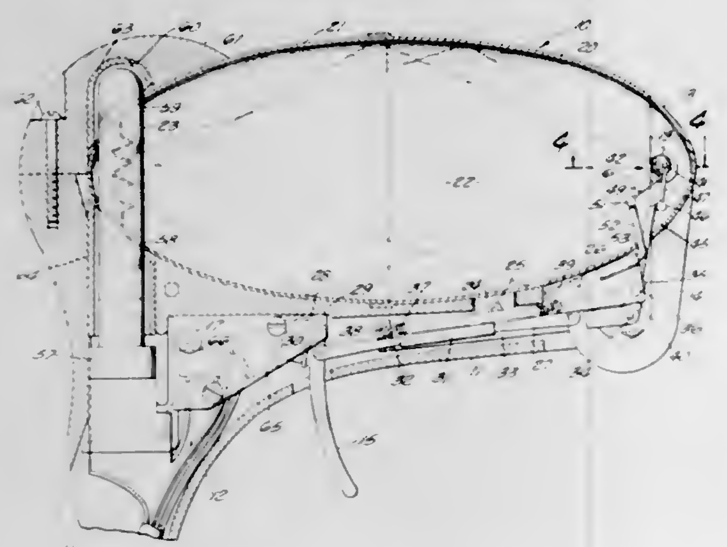

A method of installing a solder sleeve, that is, a tubular, heat shrinkable member having a solder insert therein, which comprises irradiating the solder sleeve with light energy, the wavelength band of the energy being selected so that the heat shrinkable material absorbs a sufficient fraction of the energy to cause it to shrink and transmits a sufficient portion of the energy to the solder insert to cause the latter to be raised to its fusing temperature.

3,396,456
PROCESS FOR DIFFUSION OF CONTOURED JUNCTION
Harold Weinstein, Van Nuys, Calif., assignor to International Rectifier Corporation, El Segundo, Calif., a corporation of California
Filed May 12, 1966, Ser. No. 549,723
4 Claims. (Cl. 29—580)

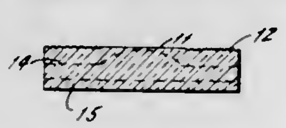

1. A process for the manufacture of a semiconductor device having diverse conductivity types exposed at one surface of a semiconductor wafer; said process comprising the steps of polishing selective regions of the upper surface of a semiconductor wafer such that regions other than said selected regions are rougher than said selected surface regions, and thereafter diffusing impurity elements associated with one of the conductivity types over the entire exposed area of said upper surface of said semiconductor wafer, whereupon said diffusing elements will diffuse to preselected depths depending upon the degree of roughness of said surface area of said upper surface of said semiconductor wafer to form a junction below said upper surface which has a predetermined contour.

3,396,457
METHOD OF MAKING AN ELECTRODE STRUCTURE
Robert W. Nordin, Skokie, Ill., assignor to Teletype Corporation, Skokie, Ill., a corporation of Delaware
Filed Dec. 2, 1965, Ser. No. 511,085
2 Claims. (Cl. 29—592)

An electrode structure is formed by etching a plate of the electrode material to form the desired electrode shapes but with the electrodes still connected to the outer edges of the plate to form a temporary support; making electrical strapping connections between selected electrodes; potting with epoxy the portions of the electrodes which are to be unexposed; and severing the electrodes from the temporary support.

3,396,458
ELECTRICAL HEATING ELEMENTS AND METHOD AND APPARATUS FOR MAKING THE SAME
Eberhard Meng, Cottage City, and Douglas K. Neeld, Silver Spring, Md., assignors to Electro-Therm, Incorporated, Laurel, Md., a corporation of Maryland
Filed Mar. 28, 1966, Ser. No. 537,826
3 Claims. (Cl. 29—615)

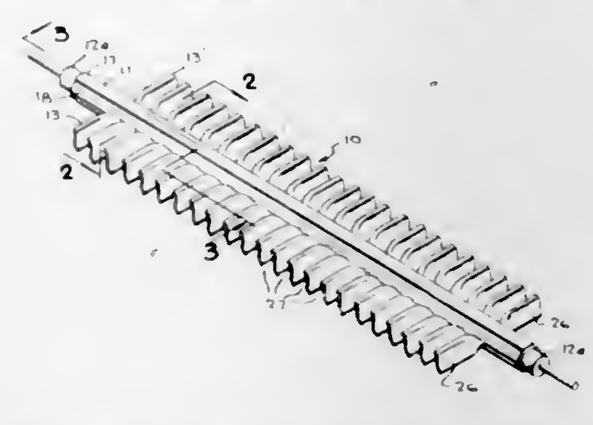

A method of forming finned electrical heating elements from extruded metal stock having a central tube portion of circular cross section and fins projecting radially outwardly therefrom in a diametric plane of the tube portion integral with the latter, by loading the bore of the tube portion with resistance wire and granular insulating material, closing the ends of the bore, passing the tube portion into rolling contact with confronting die surfaces to reshape the cross-sectional configuration of the tube portion to nonround cross-section having a straight side paralleling the longitudinal axis of the bore and providing at least about a 10% reduction in cross-sectional area, and cutting through and twisting the fins to provide plural fin segments arranged substantially in parallel planes inclined to the axis of the tube portion.

3,396,459
METHOD OF FABRICATING ELECTRICAL CONNECTORS
Eugene G. Freehauf, Ontario, and William P. Dugan, Monterey Park, Calif., assignors to General Dynamics Corporation, Pomona, Calif., a corporation of Delaware
Filed Nov. 25, 1964, Ser. No. 413,689
9 Claims. (Cl. 29—625)

A method of making integral conductor paths and through-hole tubes in multilayer positioner boards on which components are to be mounted. According to this method, a temporary backing material of aluminum is applied to the board having at least one internal circuit; holes are formed through the assembly in desired locations; the desired circuit path or paths is formed on the board; the holes are through-plated along with the desired circuit; and the backing material is removed from the assembly to leave through-hole tubes extending from the back of the multilayer positioner board.

3,396,460
METHOD OF MAKING A CONNECTION
Judson Douglas Wetmore, San Diego, Calif., assignor to Raychem Corporation, Redwood City, Calif., a corporation of California
Original application July 23, 1962, Ser. No. 211,747, now Patent No. 3,243,211, dated Mar. 29, 1966. Divided and this application Oct. 21, 1965, Ser. No. 499,922
26 Claims. (Cl. 29—629)

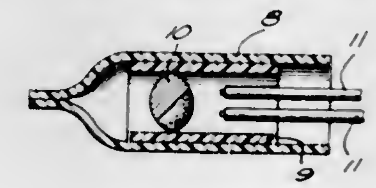

This is a method of making a composite article from two members. The first member comprises a fusible member and a recoverable member with the recoverable member being in abutting relation to the fusible member. The first member is positioned with the second member so that recovery of the recoverable member will urge the fusible member toward the second member and this preform is then heated to cause the fusible member to become fluid and to cause the recoverable member to urge the fusible member toward the second member.

3,396,461
PRINTED CIRCUIT BOARD AND METHOD OF MANUFACTURE THEREOF
Howard E. Spooner and Adolph G. Bergmann, Barrington, R.I., assignors to Engelhard Industries, Inc., Newark, N.J., a corporation of Delaware
Continuation of abandoned application Ser. No. 242,323, Dec. 4, 1962. This application Nov. 18, 1964, Ser. No. 412,161
1 Claim. (Cl. 29—630)

The present invention relates to the method of cladding the terminals of a printed circuit board of the type composed of a dielectric material and having bonded on a surface thereof a plurality of electrical circuit elements terminating in an aligned group of substantially parallel laterally spaced terminals on an end portion of the board, comprising positioning a comb-like strip of electrically conductive material onto the terminals, the comb-like strip comprising an elongated backing member having

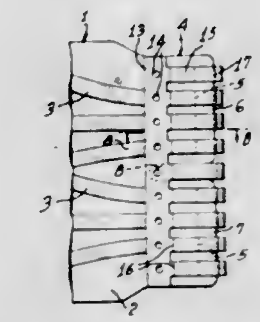

a plurality of substantially parallel blades laterally spaced to coincide with the spacing of the terminals and extending from a longitudinal edge of the backing, aligning the blades to register with the terminals, securing the blades to the terminals, and thereafter removing the backing member.

3,396,462
ELECTRIC RAZOR CLEANING SYSTEM
Edmund A. Dufresne, 403 E. Vickie, Santa Maria, Calif. 93454
Filed June 9, 1967, Ser. No. 644,935
3 Claims. (Cl. 30—41.5)

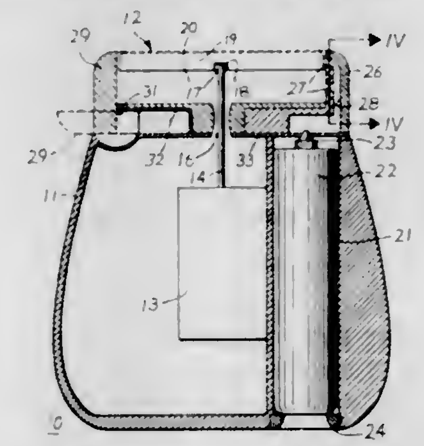

The body of an electric razor contains a capsule of fluid under pressure released by a manually operated valve. Conduits are constructed through the head of the razor to direct an intense blast of gas so that cut hairs and whiskers are blown out of the razor, thereby cleaning it.

3,396,463
DRY SHAVER HAVING A SINGLE SPRING MEANS AS A DRIVE ELEMENT AND TO RETAIN THE INNER CUTTER IN THE SHAVER HEAD WHEN SAID HEAD IS REMOVED
Roland Neumann, Rappelsdorf, Kries Suhl, Thuringia, Horst Wünschmann, Suhl, Thuringia, and Paul Ehrhardt, Schmiedefeld-Rennsteig, Thuringia, Germany, assignors to VEB Elektrogeratewerk Suhl, Suhl, Thuringia, Germany
Filed June 13, 1966, Ser. No. 557,294
6 Claims. (Cl. 30—43.92)

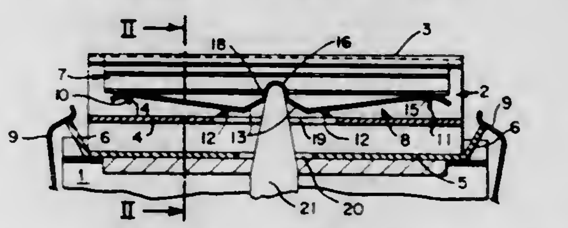

In a removable shaver head having a base plate, a stationary outer cutter, a movable inner cutter, a W-

shaped leaf spring as a drive element of the inner cutter, and a retaining plate fixed to the base plate, said spring being coupled to the inner cutter by means of slide joints on its ends, and being provided with downwardly directed lugs which due to the spring action are retained by the retaining plate when said head is removed.

3,396,464
DOUBLE EDGE INJECTOR RAZOR
George Treiss, 100 Westbrook Drive, Lancaster, Pa. 17600
Filed Mar. 2, 1966, Ser. No. 531,169
3 Claims. (Cl. 30—63)

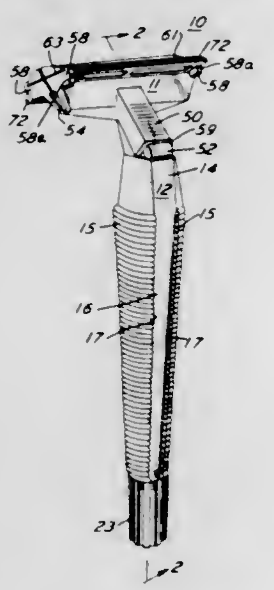

A double edge injector razor with provisions for varying the position of the head in which the blade is carried and for adjusting the cutting angle of the blade as desired, one edge of the blade being exposed for cutting and the other edge being protected until exposed for use.

3,396,465
SAFETY RAZOR GUARD
John V. Knight, 7924 Olson Memorial Highway 55427, and Fred E. Jones, 5905 Westbrook Road 55422, both of Minneapolis, Minn.
Filed Feb. 11, 1966, Ser. No. 526,736
1 Claim. (Cl. 30—90)

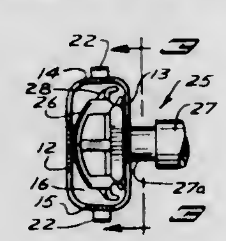

A guard for the head of a safety razor consisting of a tubular member to accommodate the head of a safety razor and a keyhole slot extending inwardly from an end of one wall of said member, said slot having an inwardly extending tapered width forming a restricted portion permitting the frictional passage of the handle of a safety razor therethrough, said restricted portion opening into the inner end portion of the slot wherein the handle of said safety razor is received.

3,396,466
PROTECTOR FOR SAFETY RAZOR
Tom J. Suzuki, 1013 W. Fairchild St., Danville, Ill. 61832
Filed Mar. 28, 1966, Ser. No. 537,857
3 Claims. (Cl. 30—90)

A protector for a safety razor wherein a removable protective cover is provided which is adapted to fit over the head of the razor. The cover has a pair of beaded flanges depending downwardly on the inside of the cover. The protector cover is placed on the razor head with the hinged cover plates of the razor head open and one of the flanges on each side of the razor centerpost. The hinged cover plates are then closed to bear on the

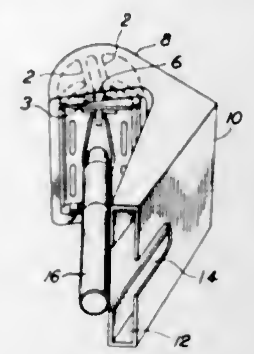

beaded portion of the flanges and lock the protector cover in place. The protective cover may include a housing extension for holding spare blades which is grooved to allow the razor handle to hold the spare blades in place. The protective cover may also include a brush for cleaning the razor.

3,396,467
CUTTER FOR PIECES OF PIPING
Fred J. Scocozza, 6—12 123rd St., College Point, N.Y. 11222
Filed Feb. 27, 1967, Ser. No. 618,943
2 Claims. (Cl. 30—95)

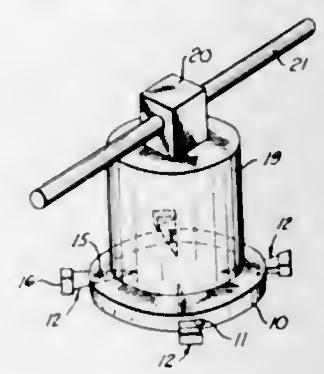

A cutter having inwardly projecting blades and adapted to be placed on the ground over a projecting pipe section so as to cut it off by a manually imparted rotary movement of the casing carrying the blades.

3,396,468
DENTAL APPLIANCE
Donald G. Dayhoff, 2042 Kessler Blvd., N. Drive, Indianapolis, Ind. 46222
Filed May 18, 1966, Ser. No. 551,008
9 Claims. (Cl. 32—33)

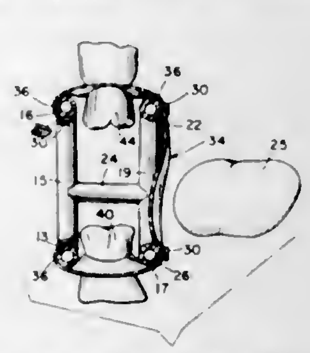

1. A dental appliance, comprising flexible first and second generally U-shaped tubular members adapted to lie, respectfully, buccally along a patient's mandibular and maxillary arches and lingually and palatally along said mandibular and maxillary arches, said first and second members having pluralities of openings formed therein, a third tubular member interconnecting said first and second members intermediate their lengths, means for connecting said first and second members to a vacuum source, pluralities of projections on said first and second members, and a flexible sheet having openings formed therein for reception over said projections whereby said sheet can extend over the teeth in the mandibular and maxillary arches and lingually and palatally bridge the space between said arches.

3,396,469
LETTERING SET GUIDE FOR FELT TIP MARKERS
Joseph W. Brott, Beatrice, Nebr., assignor of twenty-two and one-half percent to Hans J. Holtorf, Jr., twenty-two and one-half percent to La Verne H. Hansen, and five percent to Alfred J. Kortum, all of Gering, Nebr.
Filed July 7, 1967, Ser. No. 651,860
1 Claim. (Cl. 33—23)

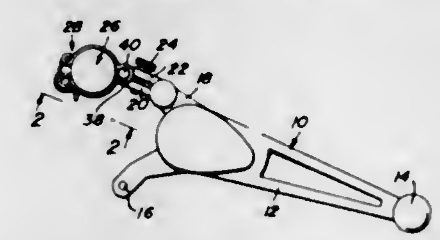

An adapter for a conventional scriber including a portion adapted to be removably supported from a scriber in lieu of a pencil or pen element of the scriber and to support a felt tip marker therefrom whereby the scriber may be utilized to guide the movement of the felt tip marker.

3,396,470
APPARATUS FOR MEASURING FREEBOARD IN CHOPPY WATER
Harold R. Wood, 537 Pala Ave., San Leandro, Calif. 94577
Continuation-in-part of application Ser. No. 492,678, Oct. 4, 1965. This application July 26, 1967, Ser. No. 659,838
3 Claims. (Cl. 33—126.5)

Freeboard measuring apparatus adapted for use in choppy seawater and including a rigid tube which is weighted at its bottom end, a cap attached to the bottom end of the tube and carrying a pipe for the passage of seawater into the tube, a bail connector secured to the top of the tube and provided with a bail which is removably coupled to a graduated flexible tape through the medium of a snap hook. A graduated dip stick is positioned in the tube and extends from the bottom of the tube to the flexible tape. The tube, cap, pipe, bail connector, bail and dip stick are all made of a suitable noncorrosive material, preferably copper or an appropriate copper alloy.

3,396,471
TAPE COMBINATION MEASURE
Gerald P. Taylor, R.R. 1, Gilbert, S.C. 29054
Filed Jan. 13, 1966, Ser. No. 520,436
1 Claim. (Cl. 33—127)

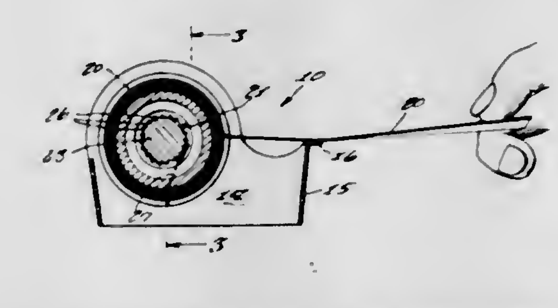

A tape dispenser including a supporting frame for a rotatable drum carrying tape wound around the same, and a rotatable measuring device which is engageable to rotate with the drum during tape dispensing operation, the measuring device including a circular disc with measurement graduations around the periphery thereof for alignment with an indicator arrow marked upon the supporting frame.

3,396,472
DEVICE TO MEASURE DIAMETER AND THREAD PITCH OF A SCREW
Wilfred Moss, P.O. Box 255, South Duxbury, Mass. 02374
Filed June 28, 1966, Ser. No. 561,285
9 Claims. (Cl. 33—199)

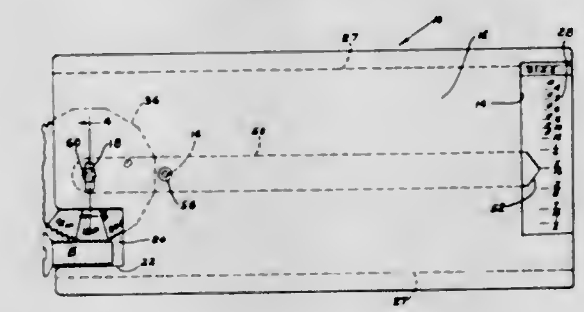

1. A device to determine diameter and thread pitch of a screw-threaded member comprising supporting means having an opening intermediate the top and bottom thereof and having a slot therethrough, a disc extending into said opening having a plurality of straight edges at the periphery thereof extending angularly to each other, and threads formed in said edges, an indicating arm, first means rotatably connecting said arm and said supporting means, second means extending through said slot, arm and disc rotatably connecting said disc to said arm and to said supporting means, said second means being slidable in said slot whereby said disc may be moved about said first means, said arm extending from and beyond said disc.

3,396,473
METHOD OF DESORBING VAPORIZABLE LIQUIDS FROM SORPTIVE MATERIAL
Robert B. Turner, Midland, Mich., assignor to The Dow Chemical Company, Midland, Mich., a corporation of Delaware
No Drawing. Filed Aug. 3, 1966, Ser. No. 569,838
4 Claims. (Cl. 34—1)

This invention relates to a method for removing vaporizable liquids, such as chlorinated hydrocarbons, from contaminated electrically conductive sorptive materials, such as porous carbon, by passing an electric current through a bed of such conductive materials to heat them by electrical resistance to a temperature above about 1.5 times the boiling point of the sorbed liquid.

3,396,474
CAPACITIVE HEATING APPARATUS FOR DRYING AN OBJECT HAVING A DIELECTRIC VALUE AND GEOMETRICAL DIMENSIONS WHICH VARY AS SUCH OBJECT IS DRIED
Emil Walther, Erlangen, Klaus Schmidt, Erlangen-Bruck, and Hans-Christian Grassman, Erlangen, Germany, assignors to Siemens Aktiengesellschaft, Berlin and Munich, Germany, a corporation of Germany
Filed Jan. 9, 1967, Ser. No. 608,077
12 Claims. (Cl. 34—1)

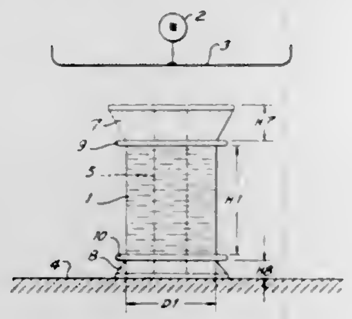

Capacitive heating apparatus for drying an object having a dielectric value and geometrical dimensions which vary as the object is dried includes a pair of spaced electrodes which provide a capacitive heating field. First and second spaced auxiliary electrodes of different dimensions are positioned in the capacitive field between the electrodes. Each of the auxiliary electrodes has an inner surface facing the other of the auxiliary electrodes. First and second heat insulating layers having poor dielectric loss characteristics are each affixed to the inner surface of a corresponding one of the auxiliary electrodes. The object is positioned between the first and second heat insulating layers.

3,396,475
FREEZE DRYING SYSTEM
Edward George Scheibel, 75 Harrison Ave., Montclair, N.J. 07042
Filed Jan. 10, 1966, Ser. No. 519,602
15 Claims. (Cl. 34—5)

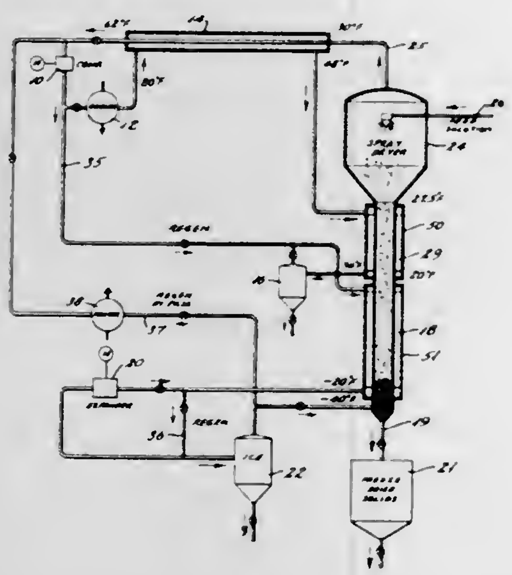

A freeze drying system characterized by direct freeze drying contact between liquid feed and a chilled carrier gas at sub-atmospheric pressure. The carrier gas recirculates through a cycle in which the carrier gas and the vapors evolved by the freeze drying are compressed, then progressively chilled to a sub-freezing temperature level. The evolved vapors condense during the course of chilling, either being removed as a liquid condensate or deposited in frozen state in the system. The chilled compressed carrier gas is expanded to further reduce the temperature level, then is employed to chill the compressed carrier gas by indirect heat exchange therewith and to freeze dry the liquid feed by direct contact therewith. Periodically, the feed is halted, and the system is regenerated by flowing relatively hot gas directly from the compresser through the ice laden portions of the system to melt frozen condensate.

3,396,476
MEANS AND METHOD OF CONTROLLING DEHYDRATORS
Raymond O. Eaves, Brawley, Calif., assignor to Batley-Janss Enterprises, Brawley, Calif., a corporation of California
Filed Mar. 13, 1967, Ser. No. 622,581
10 Claims. (Cl. 34—25)

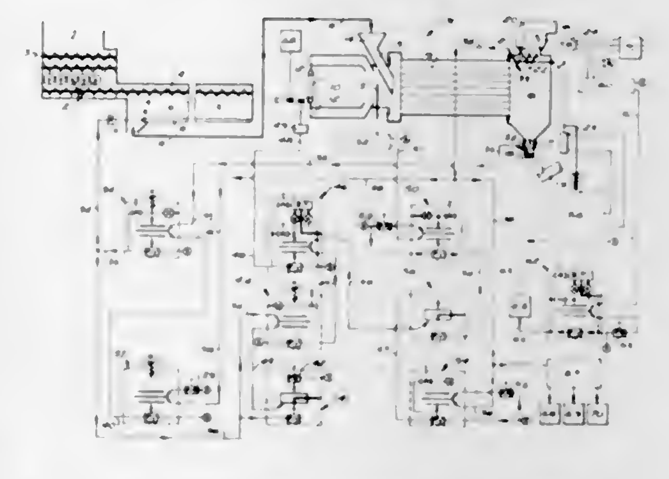

A control system for dehydrators by which the air discharge temperature and discharge temperature of the product being dehydrated are measured to control the feed rate of the material being dehydrated, while under normal conditions, the furnace temperature remains constant.

3,396,477
AGGLOMERATING APPARATUS
Harry C. Nora, Minneapolis, Minn., assignor to The Pillsbury Company, Minneapolis, Minn., a corporation of Delaware
Filed Nov. 7, 1966, Ser. No. 592,349
12 Claims. (Cl. 34—85)

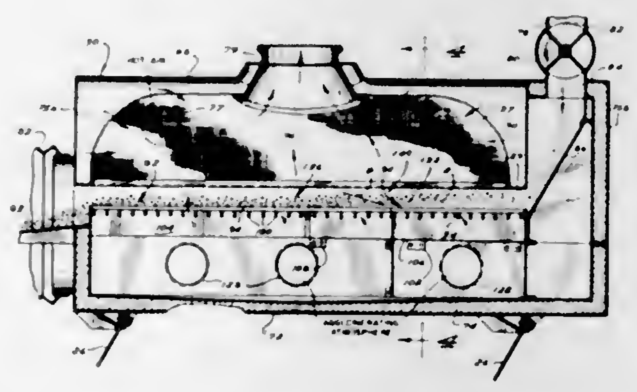

Apparatus for agglomerating particulate material to form porous clusters or agglomerates. The apparatus includes a first foraminous surface for supporting the bed of particles that is to be agglomerated with a duct communicating through the surface to force an agglomerating atmosphere such as heated moist air containing particles of water vapor upwardly through the bed and a second gas diffusion surface above the bed for introducing a protective gas into the upper portion of the agglomerating chamber to provide a gaseous boundary layer for preventing the undesired deposition and build-up of pulverulent material on the inside surface of the apparatus.

3,396,478
AUDIO-VISUAL INSTRUMENT
Robert Genin, Scarsdale, N.Y., assignor, by mesne assignments, to Amram et Fils S.A.R.L., a corporation of France
Continuation-in-part of application Ser. No. 601,645, Dec. 14, 1966. This application July 14, 1967, Ser. No. 653,519
8 Claims. (Cl. 35—35)

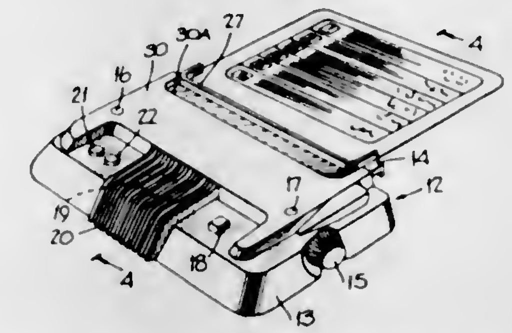

An audio-visual instrument wherein a card printed on its top face with a series of visual information bits and having on its rear face an equal number of pre-recorded parallel magnetic tracks containing verbal information related to the corresponding bits, is borne on a slide carrier which is selectively movable with respect to a playback head whereby the head may be aligned with a desired track and caused to scan across this track to reproduce the verbal information recorded therein.

3,396,479
SKI OVERBOOT
William Primak, 735 S. Quincy St., Hinsdale, Ill. 60521
Filed Oct. 14, 1965, Ser. No. 495,947
10 Claims. (Cl. 36—2.5)

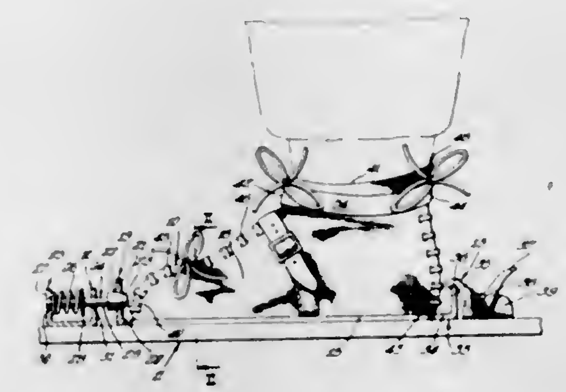

A ski overboot adapted to be held in a ski release binding and having a substantially rigid sole with a flexible upper extending from opposite sides of the sole. The flexible upper has a first set of adaptation flaps extending from the rear of the ankle opening to the heel portion and having a second set of adaptation flaps extending from the front of the ankle opening to the toe portion. The adaptation flaps are provided to be adjustably by means of a rear lacing and a front lacing which are secured to the respective flaps for adjustably controlling the degree of restraint of the overboot on the innerboot.

3,396,480
CHILD'S SHOE
Martin Sherman, 35 Claver Place, Brooklyn, N.Y. 11238
Filed Apr. 24, 1967, Ser. No. 632,958
1 Claim. (Cl. 36—2.5)

A child's shoe construction which when worn gives the illusion of an open top automobile, of the roadster or sports type. The shoe has an outer sole, and an inner sole, a toe portion and a heel portion. The upper is formed of a single piece of soft material such as leather, plastic or the like and is shaped in simulation of the body of an open top automobile or the roadster type. The toe portion is broad and stands out giving the illusion of a headlight and grill assembly. The outer sole is formed of thin leather

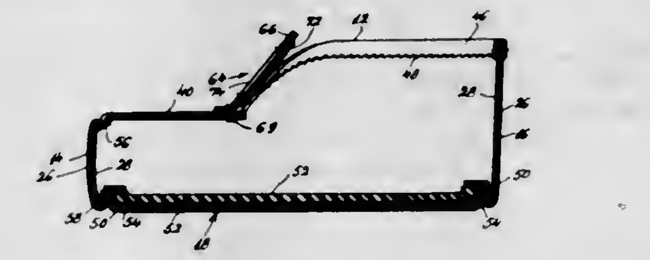

or vinyl and the inner sole of felt material. The outer surface of the upper and toe portion may be decorated with designs simulating automobile parts. The tongue of the shoe is positioned outside of the upper and simulates in shape a windshield of an automobile.

3,396,481
EARTHMOVING MACHINE
William P. Hovorak, 1023 W. 16th, Wellington, Kans. 67152
Filed Sept. 23, 1965, Ser. No. 489,518
11 Claims. (Cl. 37—108)

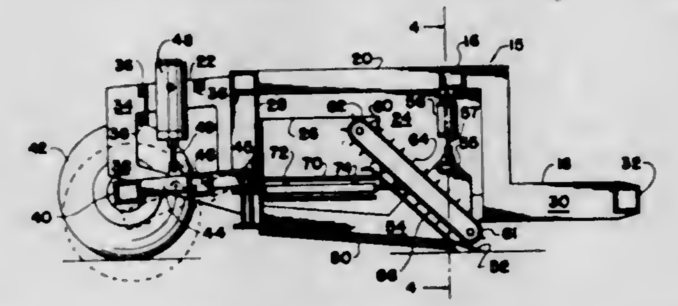

An earthmoving or terracing apparatus is provided with a frame, having horizontally spaced portions, which is supported by wheel means which can be raised or lowered to adjust the height of the frame. A blade is mounted on the frame and a means is provided for adjusting the height of the blade. An inclined elevator means is positioned by the spaced portions of the frame so that the lower end of the inclined elevator is positioned adjacent the blade. A transverse conveyor is positioned rearwardly of the inclined elevator and is adapted to receive material therefrom. At least one delivery conveyor is mounted on the frame and positioned so as to receive material from the transverse conveyor and transfer the material outwardly away from the apparatus.

3,396,482
FASTENING DEVICE
Fernando Pradenas, Daly City, Calif., assignor to Triad Enterprises, San Francisco, Calif., a corporation of California
Filed Sept. 6, 1966, Ser. No. 577,399
8 Claims. (Cl. 40—2.2)

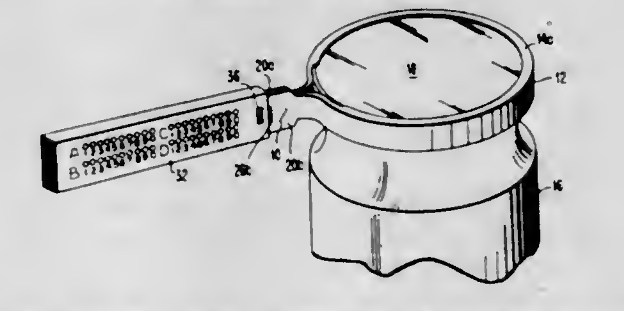

A band type closure retainer. The free ends of the band are held together by a coded seal whereby the container cannot be opened unless the seal is ruptured according to the said code.

The present invention relates to the releasable fastening devices of the type employed to secure lids to jars, bottles and like containers.

3,396,483
SIGN FRAME
Clinton L. Stein, 222 N. Lake Drive, Watertown, S. Dak. 57201, and Eugene L. Redlin, Watertown, S. Dak.; said Redlin assignor to said Stein
Filed Apr. 23, 1965, Ser. No. 450,280
5 Claims. (Cl. 40—125)

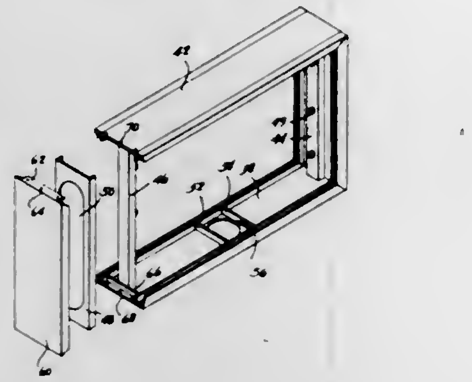

A sign frame constructed from a first structural member bent about spaced fold lines provided along its length. A second structural member is connected by removable fasteners or a hinged construction to the first structural member for completing the frame construction. The longitudinal edges of each structural member are provided with spaced retaining lips for clamping a placard therebetween; the outer lip being bent towards the inner to effect the clamping action. At the fold lines, the retaining lips are cut with V-shaped notches to facilitate bending. The outer retaining lip is smaller in height than the inner lip to effect moisture drainage to the exterior of the sign frame. Provision is also made for support-illumination means within the frame interior.

3,396,484
FISHING SINKER
Samuel Hess Clark, 8873 Kibbie Road, Marysville, Calif. 95901
Filed Dec. 5, 1966, Ser. No. 599,081
5 Claims. (Cl. 43—42.13)

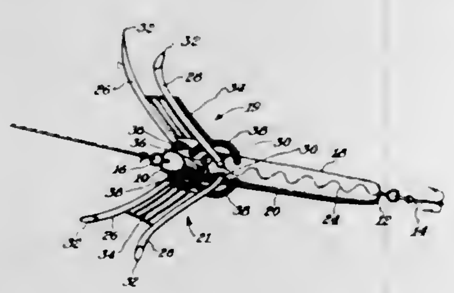

1. A fishing sinker comprising:
(a) an elongated body having a broad head end and a narrow tail end, said body having first and second substantially parallel spaced apart main surfaces interconnected by transversely extending substantially parallel oppositely disposed first and second side surfaces;
(b) a first prong member having first and second interconnected prongs having front and rear ends, the front ends being pivotally secured to corresponding side surfaces adjacent said head, said first member being disposed adjacent said first main surface and having alternative forward and rear positions with respect thereto, the rear ends of the first member prongs extending in front of said body head end when the first member is in its forward position and extending toward the body tail end when the first member is in its rear position; and
(c) a second prong member having first and second interconnected prongs having front and rear ends, the front ends being pivotally secured to corresponding side surfaces adjacent said head, said second member being disposed adjacent said second main surface and having alternative forward and rear positions with respect thereto, the rear ends of the second member prongs extending in front of said body head end when the second member is in its forward position and extending toward the body tail end when the second member is in its rear position.

3,396,485
FISHING FLY
William Donald Kuntz, 1830 Park Ave., Bridgeport, Conn. 06604
Filed Oct. 24, 1965, Ser. No. 504,547
3 Claims. (Cl. 43—44.8)

A fish hook having a compressible coil spring coiled around the hook shank and formed with outwardly extending ends. The spring ends are adapted to enter a live bait when compressed and when thereafter released and expanded will serve to retain the bait on the hook shank.

3,396,486
ANIMAL TRAP
Otto P. Dohms, R.F.D. 1, Harrietta, Mich. 49638, and Myron Updike, 117 Henry St., Mesick, Mich. 49668
Continuation-in-part of application Ser. No. 455,882, May 14, 1965. This application Nov. 5, 1965, Ser. No. 511,281
6 Claims. (Cl. 43—90)

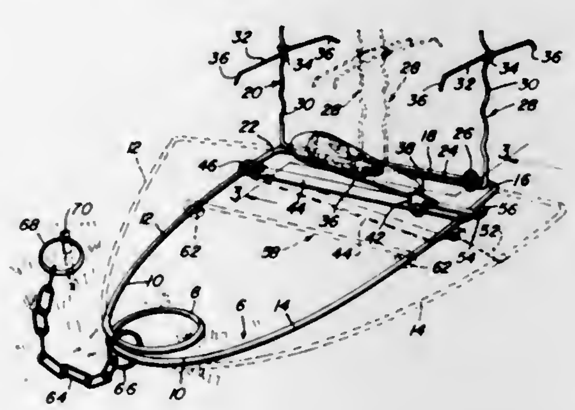

A spring steel rod is bent to provide a trap frame having expansible and contractable limbs joined at like ends by coil spring means. The other ends of these limbs are slidingly linked and have integrated upstanding jaws such that when tripped move together and squeeze the trapped animal. These jaws have opposed strikers to achieve the lethal blow desired. A latch-equipped bait pan serves to (1) set and (2) releasably trip the jaws.

3,396,487
TOY TRAVERSING HOIST AND GAME
J Marlin Risser, R.D. 2, Elizabethtown, Pa. 17022
Filed May 27, 1966, Ser. No. 553,350
10 Claims. (Cl. 46—244)

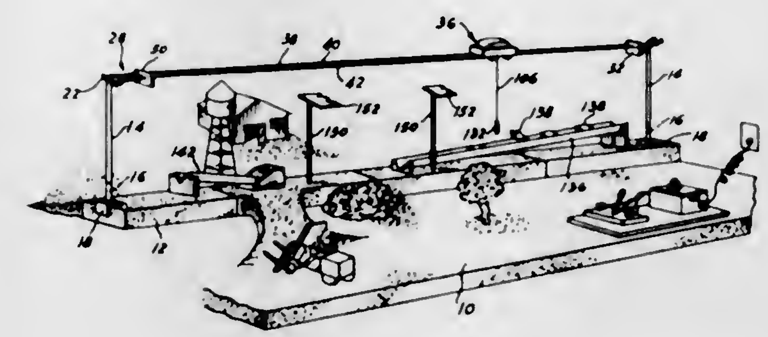

1. A toy traversing hoist comprising in combination three metallic cables, means to support said cables at opposite ends in parallel relationship substantially within a common horizontal plane and electrically insulated from each other, a carriage having a set of at least three grooved wheels rotatable thereon in transversely spaced relationship similar to the spacing of said cables and arranged respectively to engage said cables for support of said carriage thereby, reversible electric motor means carried by said carriage, means interconnecting said motor means and said wheels selectively to rotate them in desired opposite directions, and a double-throw electric polarized switch means connectable to a source of current and two of the contacts thereof being interconnected respectively to two of said cables and the other being connected to ground, whereby when said switch is closed to complete a circuit between said grounded cable and one of the other cables said carriage will move in one direction and when the switch establishes a circuit between ground and the other cable the carriage will move in an opposite direction.

3,396,488
UNITARY PLANTER WITH BOTTOM FLANGE
Raymond J. Ries, 720 4th Ave., Room 271, San Diego, Calif. 92101
Filed Aug. 22, 1966, Ser. No. 573,896
1 Claim. (Cl. 47—33)

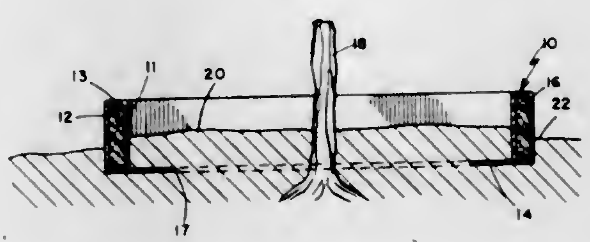

A planter of endless form, either multiple sided or circular, with spaced vertical inner and outer walls joined by flat top and bottom walls to define a hollow structure filled with static reinforcing material for rigidity. The planter is held in position by the soil placed therein in use and bearing on an inwardly extending anchoring flange unitary with and coextensive with the lower edge of the inner vertical wall and dimensioned to define a relatively larger opening in the bottom of the planter whereby roots of plantings can reach the soil beneath.

3,396,489
FIRE ESCAPE WINDOW
Joseph Cirone, 40 Vroom St., Jersey City, N.J. 07306
Filed Apr. 18, 1966, Ser. No. 543,147
4 Claims. (Cl. 49—276)

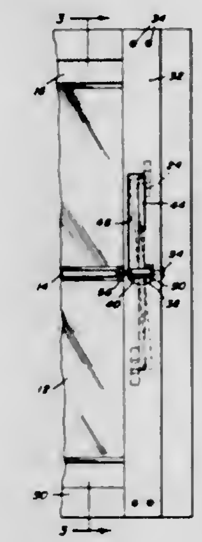

A fire escape window hingedly supported at one edge and provided with a combined latching and opening assembly at an opposite edge. The latching and opening assembly includes an elongated latching member pivotally supported intermediate its length and having latching projections at each end thereof for latching engagement with keeper brackets. The latching member can be moved about its pivot point and the pivot point itself can be tilted within limited degrees to enable latching and unlatching of the latching member with one end of the latching member also serving as a device for forcing the window to an open position.

3,396,490
DOOR AND FRAME CONSTRUCTIONS
John Dukas, 2065 Grand Ave., New York, N.Y. 10002
Filed Aug. 1, 1966, Ser. No. 569,452
6 Claims. (Cl. 49—382)

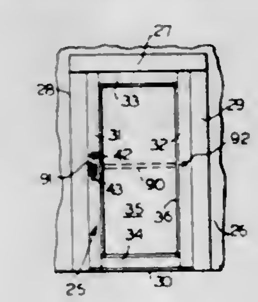

A kit offers the parts for making of installations of a door to operate in any selected manner chosen from a multiplicity of combinations. Neither the door or frame is handed, and the manner of opening may be in selected directions. The parts comprise two jamb members, a header member and a saddle member, for assembly as the frame for a door included as one of the parts of the kit. The door has end stiles of rectangular tubular stock; the open ends of which serve as sockets for blocks, and various blocks are also provided to be set into suitable openings in the header and saddle. Also provided are pintles for the hinge end of the door and locking means with slidable bolts in the stile at handle end of the door; the pintles and bolts being operative in proper assembly with certain of said blocks.

3,396,491
WINDOW ASSEMBLY
Peter Giesbrecht, 627 Roberta Ave., Winnipeg 15, Manitoba, Canada
Filed June 9, 1966, Ser. No. 556,324
1 Claim. (Cl. 49—413)

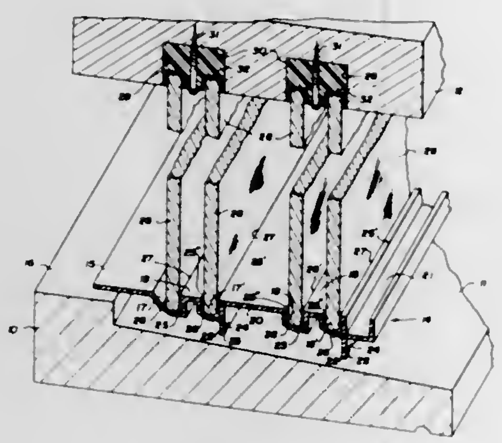

A window frame having a header strip, side jamb strips and a sill strip, all grooves for reception of slidable panes. The sill strip groove for each pane has an inner wall, an outer wall and a bottom wall sloping downwardly from the inner wall to the outer wall, and the outer wall is slanted upwardly and inwardly to a sharp edge at the top surface of the sill strip. The header strip resiliently urges the pane downwardly against the sloping bottom wall and the lower edge portion of the pane is thus wedgingly urged outwardly into sealing engagement with the sharp edge at the top surface of the sill strip.

3,396,492
GRIT BLASTING MACHINE
Robert A. M. Schenck, Wilrijk, near Antwerp, Belgium, assignor to Mercantile Marine Engineering & Graving Docks Co., Antwerp, Belgium
Filed Aug. 30, 1965, Ser. No. 483,713
Claims priority, application Belgium, June 15, 1965, 665,425
4 Claims. (Cl. 51—8)

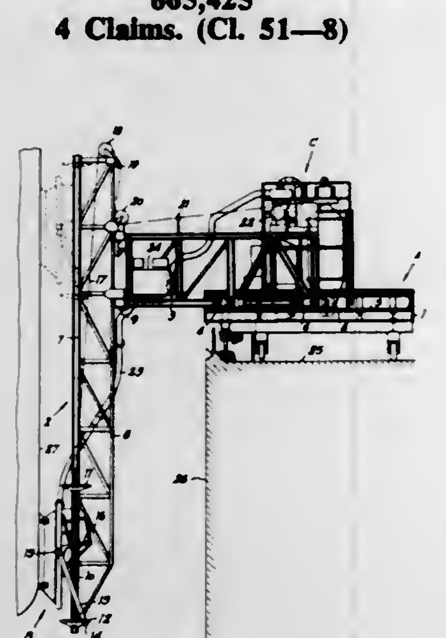

A grit blasting machine includes a vehicle, a displaceable L-shaped bracket resting with its horizontal arm on the rolling elements of the vehicle and having a vertical arm which extends downwardly with respect to the vehicle. A grit projection device is mounted on the vertical arm and is displaceable along this arm. Means are provided for bringing the projection device into contact with the surface to be grit-blasted.

3,396,493
WORK-SENSING FIXTURE AND CONTROL SYSTEM THEREFOR
Meral Calvin Irish, Richmond, Ind., assignor to National Automatic Tool Company, a corporation of Indiana
Filed Sept. 28, 1964, Ser. No. 399,584
14 Claims. (Cl. 51—53)

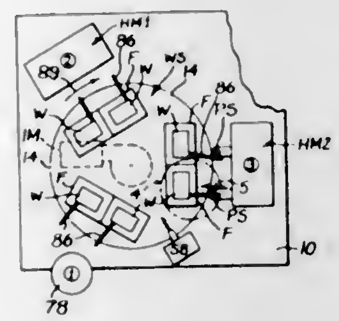

A work holding fixture may receive two different character work pieces to be worked on. A control system is operable to complete a work cycle including movement of an out-of-alignment work piece to aligned position with a tool, such movement being the result of operation of a sensing means for the out-of-alignment work piece. The sensing means does not operate if the work piece is in alignment with the tool.

3,396,494
REMOVAL OF PROTRUSIONS FORMED ON CARBON ANODES
Nolan Earle Richards, Florence, Ala., and James S. Berry, Jr., Savannah, Tenn., assignors to Reynolds Metals Company, Richmond, Va., a corporation of Delaware
No Drawing. Filed May 7, 1965, Ser. No. 454,160
4 Claims. (Cl. 51—319)

Protrusions formed on the working surfaces of electrolytic reductions, such as alumina reduction cells, are removed by applying to the surface of the protrusion a jet of high pressure oxygen gas and then applying an electric arc at a site adjacent to the point of impingement of the oxygen jet to volatilize solid electrolyte films and to initiate combustion of the protrusion; the oxygen jet may include a flow of suspended fine abrasive particles.

3,396,495
METHOD OF CLEANING A MOLDED PLASTIC ARTICLE
Allen M. Voss, Lisle, Ill., assignor to Western Electric Company, Incorporated, New York, N.Y., a corporation of New York
Filed Jan. 13, 1966, Ser. No. 520,502
1 Claim. (Cl. 51—320)

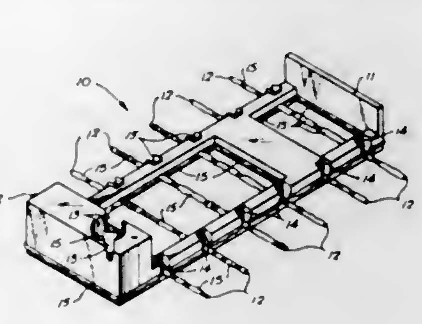

Flash is removed from a molded article made from a plastic not dissolvable with a selected solvent, by initially directing a stream of flash-removing particles of a type dissolvable in the selected solvent at the area of the article having flash thereon so as to remove the flash. The article is thereafter treated with the solvent which at least partially dissolves and thereby dislodges any flash-removing particles which may have become retained in particle confining areas of the article.

3,396,496
ADJUSTABLE AWNINGS
George B. Roberts, 453 Soudan Ave., Toronto, Ontario, Canada
Filed Sept. 2, 1966, Ser. No. 582,467
Claims priority, application Canada, Oct. 1, 1965, 941,899
3 Claims. (Cl. 52—75)

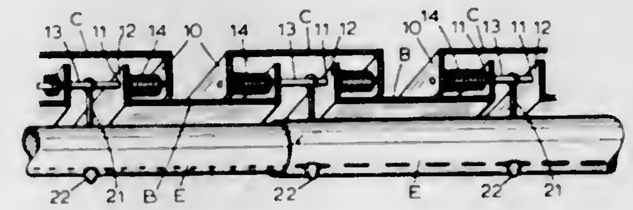

The invention essentially consists of an awning having two sets of channels with the side walls of the upper set of channels being received between the side walls of the lower, and carrying rods extending between the side walls of the upper set of channels and passing through orifices in the side walls of the lower set of channels. Springs are positioned between adjacent side walls from the upper and lower channels as to normally bias the side walls apart.

3,396,497
STRUCTURAL PANELING
Francis A. Murphy, Rocky River, Ohio, assignor to The Tyler Company, Cleveland, Ohio, a corporation of Ohio
Filed Oct. 19, 1964, Ser. No. 404,569
26 Claims. (Cl. 52—80)

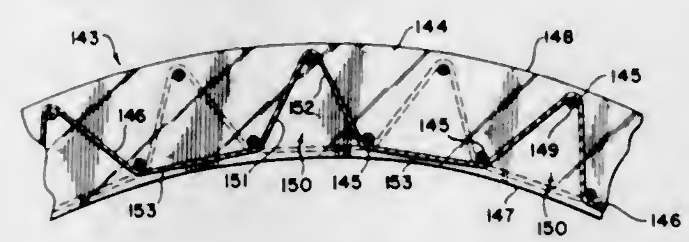

1. A decorative structural panel unit comprising a plurality of longitudinally extending members disposed in parallel planes and capable of transmitting light therethrough, means extending transversely of said members and serving to maintain said members in fixed spaced relation, and pre-formed longitudinal strip members mounted in the space defined by adjacent longitudinal extending members and coextensive therewith, adjacent strip members being relatively arranged so that portions of said longitudinally extending members are exposed on opposite sides of said panel unit thus providing for the transmission of light through said panel unit.

26. A decorative domed structural panel unit comprising a plurality of longitudinally extending arcuate members positioned adjacent one another with the plane surfaces of said arcuate members lying in parallel planes and with the top and bottom edges of said arcuate members defining parallel arcuate surfaces, said arcuate members capable of transmitting light therethrough, a plurality of arcuate rigid means extending transversely to and intersecting said members and serving to maintain said members in fixed spaced relation, and strip members woven throughout said transversely extending means and occupying the space between and extending substantially the full length of said members, portions of alternate strip members being arranged in alignment to provide light transmitting areas in said longitudinally extending members.

3,396,498
CATHEAD SUPPORTS
Frederic A. Davidson, Jr., New Rochelle, and Roger D. Schlage, Brooklyn, N.Y., assignors to Harsco Corporation, Wormleysburg, Pa.
Continuation-in-part of application Ser. No. 518,052, Jan. 3, 1966. This application Mar. 7, 1967, Ser. No. 621,302
4 Claims. (Cl. 52—123)

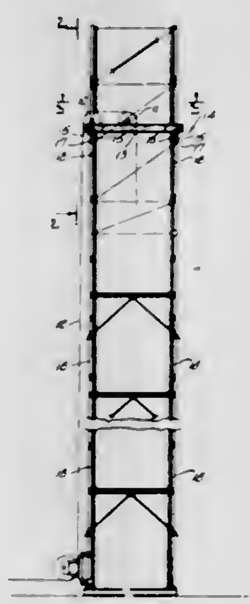

A cathead supporting structure for a skeleton panel type tower wherein a hoisting machinery carrier rests on beams which are releasably mounted between uprights or posts of constituent panels at opposite sides of a tower section. End portions of said beams rest on peripheral flanges of "sprockets" or connecting pins interposed between the panel posts of a lower tower section and those of the next higher section. Means are provided for releasably maintaining each beam against displacement in relation to the posts with which the end portions are operatively engaged.

3,396,499
STRUCTURAL MEMBERS FOR BUILDING CONSTRUCTION
Raffaele Biffani, Via Cineto Romano 45, Rome, Italy
Filed Oct. 5, 1965, Ser. No. 493,097
2 Claims. (Cl. 52—127)

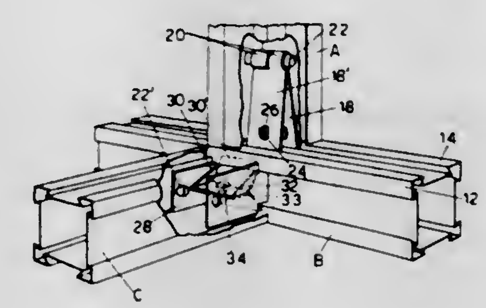

A beam of a building is substantially square in cross section and is provided at its corners with opposite inclined surfaces forming channels and ridges or triangularly shaped extensions. The butt joining of these

beams is effected by pairs of hinged arms having ends or fins which are forced by screws into firm engagement with the beams.

3,396,500
SWIMMING POOL CONSTRUCTION
Jay A. Lankheet, Holland, Mich., assignor to Glamour Pools, Inc., Holland, Mich., a corporation of Michigan
Filed Feb. 3, 1966, Ser. No. 524,947
17 Claims. (Cl. 52—169)

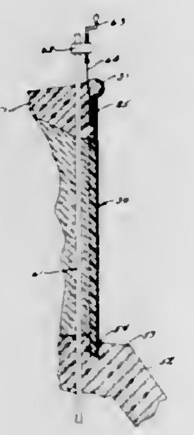

A prefabricated panel having a facial section formed from a plurality of suitably bonded glass fiber mats and being affixed to a reinforcing and insulating layer of rigid polymeric foam. The facial section includes an integrally formed coping and tile recess for use in swimming pool construction.

3,396,501
ELEVATED FLOOR SYSTEM OF GROUNDED METAL PANELS
Donald L. Tate, Severna Park, Md., assignor to Tate Architectural Products, Inc., Jessup, Md., a corporation of Maryland
Filed Feb. 21, 1966, Ser. No. 529,067
5 Claims. (Cl. 52—173)

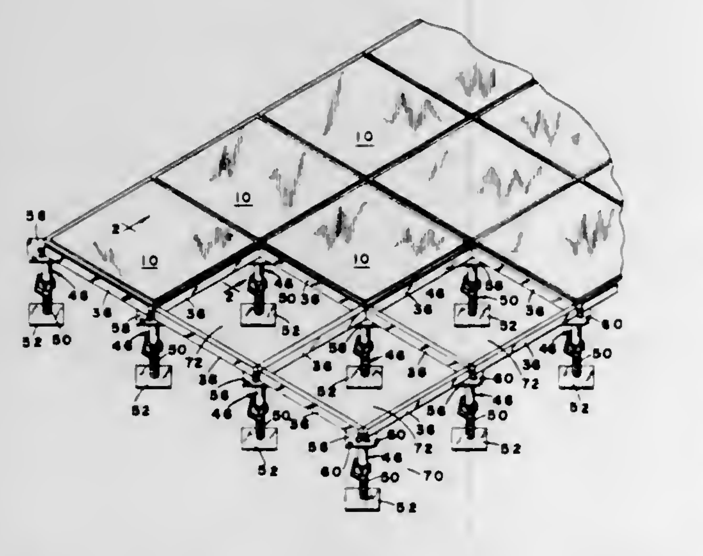

A floor system comprising rigid floor panels of uniform size supported in abutting relation upon metal stringers spaced above a subfloor surface by pedestals, the floor panels being formed from a pair of metal sheets of the same area and spaced vertically except at the edges which have flanges welded together in overlying relation, the flanges being received in yieldable channels of insulation material, and current conducting means extending around a flange of at least one of said channels to commonly engage the metal flange of the floor panel and a metal stringer which supports said flange to ground the same.

3,396,502
SUSPENSION SYSTEM FOR BUILDING CONSTRUCTION
John Contevita, La Mirada, Calif., assignor to International Environmental Dynamics, Palo Alto, Calif., a corporation of California
Filed Apr. 15, 1966, Ser. No. 542,880
2 Claims. (Cl. 52—236)

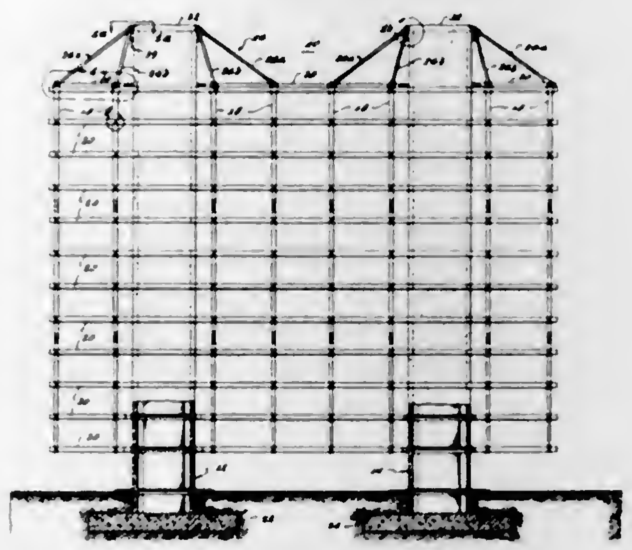

A suspension system for supporting a plurality of floors from a pair of building towers by means of tension members secured to the floors and to the towers, the elements of the suspension system being arranged to resist lateral swaying of the towers.

3,396,503
PANEL-HOLDING STRUCTURE
Paul E. Pemberton, Irving, Tex., assignor to Overhead Door Corporation, Dallas, Tex., a corporation of Indiana
Filed Sept. 16, 1966, Ser. No. 580,067
7 Claims. (Cl. 52—397)

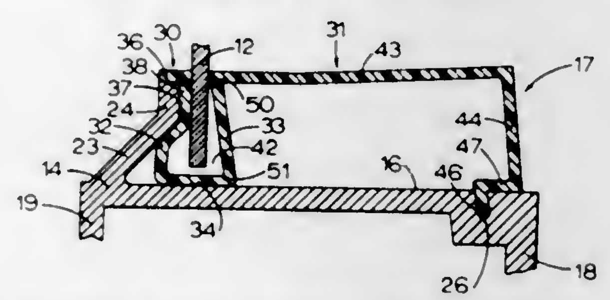

An elongated glazing element having a substantially S-shaped cross section and mountable upon a frame element between an upstanding rib and an elongated groove substantially parallel thereto. The glazing element has a channel-shaped portion into which one edge of a panel means is received and tightly held. The glazing element also has an L-shaped clamping portion for tightly holding the panel within the channel-shaped portion, the clamping portion having an offset edge receivable within the groove formed in the frame element.

3,396,504
ADJUSTABLE KEYSTONE ASSEMBLY OF MOLDED REFRACTORY MATERIAL FOR ARCHES, WALLS AND THE LIKE
Luiz Roberto De Oliveira, Belo Horizonte, Minas Gerais, Brazil, assignor to Magnesita S.A., Contagem, Minas Gerais, Brazil, a corporation of Brazil
Filed Apr. 11, 1966, Ser. No. 541,603
Claims priority, application Brazil, Sept. 29, 1965, 173,585
3 Claims. (Cl. 52—575)

A two piece adjustable keystone for closing the final opening in a course of blocks forming an arch. Each

of the pieces are of trapezoidal shape in cross section and have a wide end, a narrow end and a vertical side face. When the blocks are arranged with their vertical side faces abutting each other and the wide end of one block

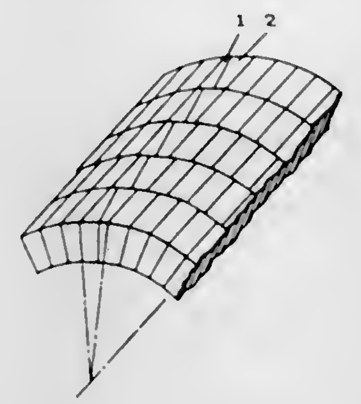

adjacent the narrow end of the other block, the blocks may be slid relative to each other to provide a keystone which can be adjustably fitted to openings of various widths.

3,396,505
CARTON PACKER
Edward McCrudden, Hannon, Ontario, Canada, assignor to Edson Machinery Limited, Hamilton, Ontario, Canada, a company of Canada
Filed Aug. 30, 1965, Ser. No. 483,630
Claims priority, application Canada, Dec. 11, 1964, 918,515
13 Claims. (Cl. 53—61)

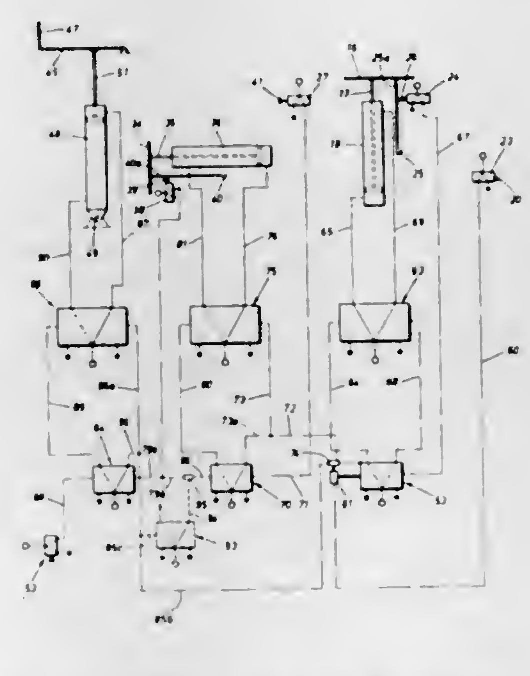

5. A carton packer apparatus comprising, in combination, primary package supporting means for receiving packages successively to form a unit layer, secondary package supporting means disposed vertically of said primary supporting means, lifting means operatively connected to said primary supporting means for laterally raising said primary supporting means and transferring said unit layer of packages onto said secondary supporting means, said lifting means being controlled by first valve means actuable by completion of said unit layer for activating said lifting means, and second valve means actuable by said lifting means for returning said lifting means to its normally at-rest position for successively collecting a complement of unit layers of packages, pusher means reciprocal horizontally for laterally transferring said full complement of unit layers of packages from the secondary supporting means to a carton, means for lowering the loaded carton, said pusher means being controlled by third valve means actuable by a complement of unit layers of packages for activating said pusher means, a first valve actuable by said pusher means for returning said pusher means to its at-rest position, and a second valve actuable by said pusher means for actuating said lowering means upon several extensions of said pusher means, said lifting means having detent means for preventing the entry of package units to the carton packer while said lowering means is in its actuated position.

3,396,506
ARTICLE-PACKING MACHINES
Herbert Geyer and Heinz Minar, Dresden, Germany, assignors to VEB Tabak- und Industriemaschinen Dresden, Dresden, Germany
Filed July 22, 1966, Ser. No. 567,139
14 Claims. (Cl. 53—112)

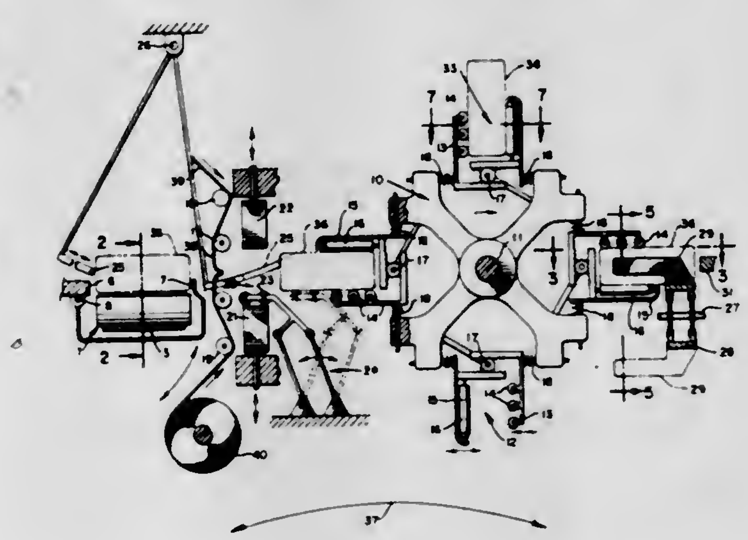

1. In a machine for packing, in a sealable sheet material, blocks, such as blocks of frozen fish, under conditions where the machine is moving in a given direction and changing its attitude, such as on board a moving ship at sea, comprising:

(a) feeding means for feeding the blocks one after the other along a linear substantially horizontal path which extends transversely with respect to the direction in which the machine tends primarily to move, said path being located in a predetermined horizontal feeding plane, an elongated stationary guide extending parallel to said path for engaging the blocks on one side thereof, opposed movable guide means extending parallel to said stationary guide on the other side of said path therefrom for engaging the other side of the blocks, said opposed guide means being displaceable to and from a position extending across said plane for guiding the blocks, and a stop situated in the path of movement of each block fed by said feeding means to terminate the movement thereof;

(b) elongated substantially horizontal discharge means extending parallel to and situated at the same elevation as but spaced laterally from said feeding means for discharging the packed articles along a second linear substantially horizontal path, stationary guide means situated beside said discharge means for guiding the packed articles during movement thereof by said discharge means;

(c) rotary transverse transporting means situated between said feeding means and discharge means and carrying a plurality of article-gripping means for successively gripping successive articles and trans-

porting them, during rotation of said rotary transporting means, from said feeding means to said discharge means, said rotary feeding means having an axis of rotation which extends parallel to said feeding and discharge paths and which is situated higher than said feeding plane by a distance approximately equal to one half the thickness of the blocks;

(d) sheet-material supply means and sealing means for sealing sheet material supplied by said sheet material supply means, said supply means and sealing means both being situated adjacent each other between said feeding means and said transverse transporting means;

(e) supporting roller means including at least one roller having an axis parallel to said axis of said transporting means, said roller means having an exterior surface extending at its uppermost part to the elevation of said feeding plane and being situated between said sheet material supply means and said transporting means for supporting an article for horizontal transverse movement from said feeding means toward said transporting means;

(f) shifting means acting between said feeding means and transporting means for transversely shifting an article from said feeding means, after engaging said stop, transversely to one of said article gripping means carried by said transporting means; and

(g) second sealing means situated over said axis of said transporting means above the latter between said feeding and discharge means for sealing sheet material in which a block is located.

3,396,507
CONTAINERIZATION OF TETRAHEDRON-SHAPED PACKAGES
James W. Morris, Framingham, and Harold T. Crossley, Foxboro, Mass., assignors to Packaging Frontiers, Inc., Waltham, Mass., a corporation of Delaware
Filed May 4, 1966, Ser. No. 547,649
10 Claims. (Cl. 53—142)

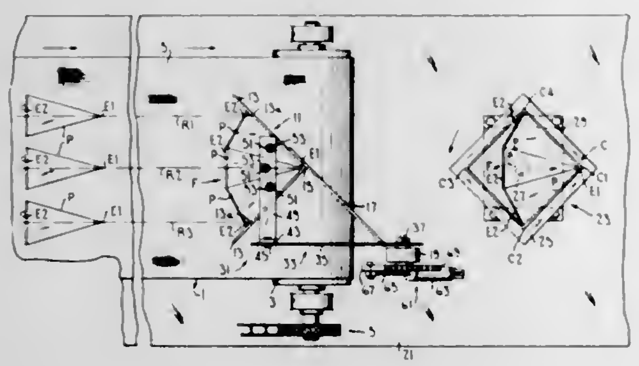

1. Apparatus for packing tetrahedron-shaped packages in multicornered containers with the packages arranged in each container in sets each shaped like a fan, each package comprising a tube having seals at its ends with these end seals at right angles to one another, each set consisting of a plurality of packages with one end seal of each package in the set at the apex of the fan and the other end seals of the packages in the fan constituting the outer edge of the fan, and with said fans positioned in the container overlying one another with their apexes at different corners of the container, said apparatus comprising means for feeding packages forward in a predetermined generally horizontal path with the packages lined up in rows extending longitudinally with respect to the direction of feed and with the end seals at the leading ends of the packages upright, means engageable by the packages as they are fed forward by said feeding means for arresting packages, one from each row, and forming the packages into a fan, and means for effecting transfer to a container of each fan after formation thereof by said arresting means.

3,396,508
CARTON ERECTING AND FILLING MACHINE
Oskar Dorfmann, North Bergen, N.J., assignor to Federal Carton Corporation, North Bergen, N.J., a corporation of New York
Filed Oct. 22, 1965, Ser. No. 500,670
6 Claims. (Cl. 53—186)

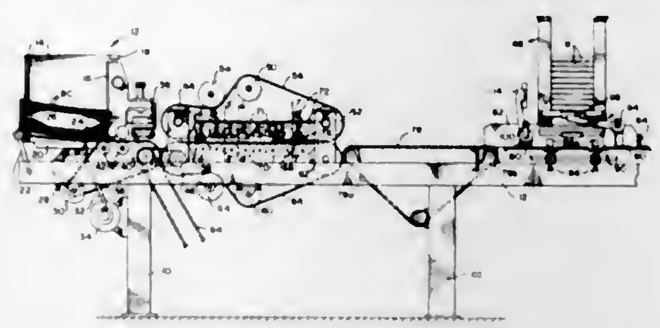

The following disclosure sets forth a machine for erecting box or carton blanks of the type having tubular end walls, filling the erected carton, and thereafter sealing the carton with the contents therein. Means are provided for taking blanks sequentially from a hopper and depositing them on a belt which moves the blanks between cooperating sets of rollers located at each side of the blank in the direction of travel, the rollers being of frusto-conical form and having sides inclined to the horizontal in the direction of feed of the blank, the rollers engaging the inner and outer sides of the tubular end walls of the carton to move these end walls from the flattened condition to an erect position, and in fact to a position beyond the vertical in order to assure that when the tubular end walls are free of the rollers, they will return to the vertical, owing to their inherent tendency to return toward the original flattened position. Means are also provided for taking articles to be loaded into the box blanks, in the particular instance, books, from a hopper and depositing them in the cartons, after which side flaps of the blank are folded upwardly and cover flaps folded over the book and glued together.

3,396,509
ROTARY TABLE PACKAGING APPARATUS
Karl Hotger, Bochum-Stiepel, Germany, assignor to Gebr. Eickhoff, Maschinenfabrik und Eisengiesserei m.b.H., Bochum, Germany, a corporation of Germany
Filed June 9, 1966, Ser. No. 556,413
Claims priority, application Germany, June 11, 1965, E 29,502
12 Claims. (Cl. 53—258)

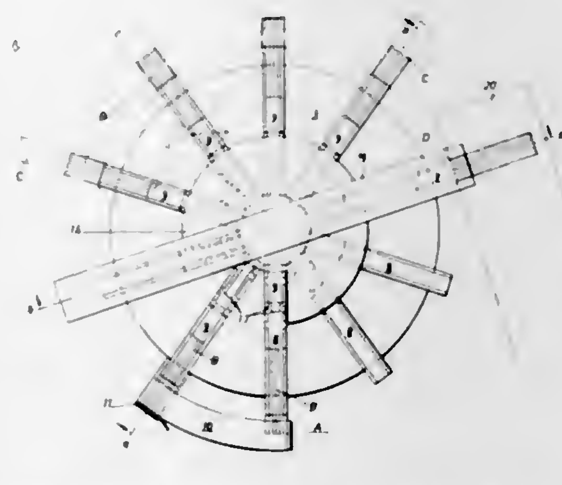

1. Apparatus for packaging rod-like articles, comprising a generally circular table rotatable about a central axis, a plurality of radially-extending article-receiving channels circumferentially spaced around said table, a piston member reciprocably carried within each channel, means to rotate the table step-by-step whereby each channel is stopped at a succession of stations while proceeding from a loading station to an unloading station, a stop member positioned beyond the periphery of the table at one of said stations and in alignment with a channel at that station, non-rotatable drive means at said one station for forcing a piston member in a channel and a rod-like article previously deposited in said channel radially outwardly until the rod-like article engages said stop member with a portion of the article projecting beyond the end of the channel, means positioned beyond said one station in the rotational path of travel of said table for preventing radial inward movement of a piston member and an article in a channel while a package is passed over the radially outermost end of said article, article-receiving means located beyond the periphery of said table at an unloading station which is beyond said loading station and said one station in the path of travel of said table, and second non-rotatable drive means at said unloading station for forcing a piston member in a channel at the unloading station radially outwardly whereby the article is pushed completely into said package and onto said receiving means.

3,396,510
LIQUID MEMBRANES FOR USE IN THE SEPARATION OF GASES
William J. Ward III, and Walter L. Robb, Scotia, N.Y., assignors to General Electric Company, a corporation of New York
No Drawing. Filed Aug. 15, 1966, Ser. No. 572,222
14 Claims. (Cl. 55—16)

The application of the phenomenon of facilitated transport to liquid membranes to more than double the separation factor for gases of such a modified liquid membrane is described. Facilitated transport is made possible by introducing into the immobilized liquid film a large concentration of at least one selected, non-volatile specie, which is soluble in the immobilized liquid and is reversibly reactive with the specific gaseous component to be separated from a mixture of gases, the reaction being productive of a soluble non-volatile specie in large concentration. Examples are given of non-volatile species useful for the facilitated transport separation of CO_2, SO_2 and O_2 gases.

3,396,511
VORTEX SEPARATOR FOR SOLID OR LIQUID AEROSOLS OR THE LIKE
Aribert Fracke, Heinrich Klein, and Rudolf Pieper, Erlangen, and Eduard Weber, Nurnberg, Germany, assignors to Siemens Aktiengesellschaft, Munich, Germany, a corporation of Germany
Filed Mar. 21, 1966, Ser. No. 535,799
Claims priority, application Germany, Mar. 20, 1965, S 96,072
9 Claims. (Cl. 55—83)

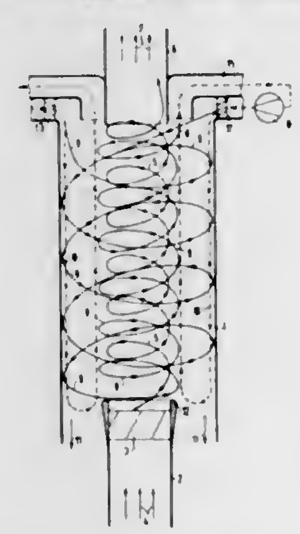

Method of increasing the separating action of a vortex separator for solid or liquid particles entrained in a gaseous carrier medium includes supplying particle-entrained gaseous carrier medium in an axial direction and in the form of a rotational flow through an inlet located at one end of a rotationally symmetrical vortex chamber; surrounding the rotational flow with a tubular-shaped vortex of a gaseous auxiliary medium coaxial with and rotating in the same rotary direction as the rotational flow; discharging the carrier medium through an outlet provided in the other end of the vortex chamber; transforming the tubular-shaped vortex at the outlet of the carrier medium into the circulatory potential flow traveling at a region adjacent the wall of the vortex chamber in a direction opposite to the axial flow direction of the carrier medium and back again at the level of the carrier medium inlet into the tubular-shaped vortex surrounding the rotation flow, so that the auxiliary medium travels in a closed circuit; removing by suction the auxiliary medium in the tubular-shaped vortex flowing in a direction coaxial with that of the carrier medium flow at the level of the outlet for the carrier medium, and resupplying auxiliary medium to the vortex chamber through an annular slot formed at the outlet end thereof.

Apparatus for carrying out the foregoing method includes a rotationally symmetrical vortex chamber having an inlet at one end for supplying particle-entrained gaseous carrier medium in an axial direction and having an outlet at the other end thereof for discharging the carrier medium; means in the inlet creating a rotational flow in the vortex chamber; inlet means extending transversely to the axial direction for supplying a gaseous auxiliary medium to the vortex chamber in the form of a tubular-shaped vortex surrounding the rotational flow, the tubular-shaped vortex being coaxial with and rotating in the same rotary direction as the rotational flow; outlet means extending transversely to the axial direction for discharging the auxiliary medium from the vortext chamber; blower means outside the vortex chamber having its negative pressure side in communication with the auxiliary medium outlet means for removing by suction from the vortex chamber, the auxiliary medium flowing in a direction coaxial to the carrier medium flow axis; the means for supplying auxiliary medium being in communication with the positive pressure side of the blower means for resupplying auxiliary medium to the vortex chamber, whereby the tubular-shaped vortex is transformed at the outlet into the circulatory potential flow traveling in a direction opposite to the axial flow direction of the carrier medium at a region adjacent the wall of the vortex chamber and is transformed back again into the tubular-shaped vortex surrounding the rotational flow at the level of the carrier medium inlet, so that the auxiliary medium travels in a closed circuit.

3,396,512
METHOD AND APPARATUS FOR THE TREATMENT OF LIQUIDS
Robert E. McMinn, Oklahoma City, Okla., and Clifford C. Dougherty, Jr., Kansas City, Mo., assignors to Black, Sivalls & Bryson, Inc., Kansas City, Mo., a corporation of Delaware
Filed Sept. 22, 1966, Ser. No. 581,367
7 Claims. (Cl. 55—170)

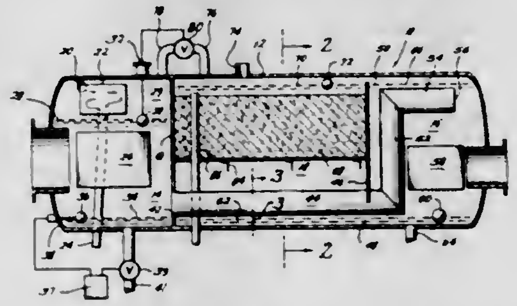

The present invention is directed to a method and apparatus for the treatment of liquids, and more particular-

ly, to method and apparatus used in the separation of liquids of differing densities and of gases also contained therein. The present invention utilizes a vessel having compartments containing heating means, filtration means, and conveying means, all designed to continue the coalescence and separation. To this end, conveying ducts having a large cross-sectional area are used, which ducts terminate below maintained liquid levels.

3,396,513
STEAM AND WATER SEPARATOR
John Humphreys, London, England, assignor to Babcock & Wilcox, Limited, London, England, a corporation of Great Britain
Filed Nov. 21, 1966, Ser. No. 595,766
4 Claims. (Cl. 55—201)

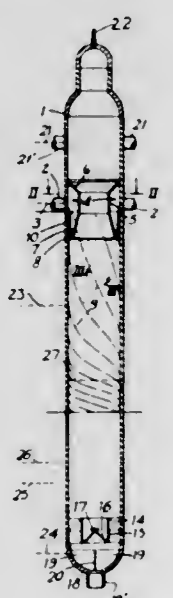

A gas-liquid separator having an annular centrifugal separating chamber positioned within an upright pressure vessel with the liquid discharged downwardly from the separator with the rotary component of liquid motion imparted by inclined vanes within the separating chamber and continued by a helical chute pitched to gradually increase the rotary component of liquid motion until its discharge below the liquid level maintained within the vessel.

3,396,514
GAS CLEANING SYSTEM
Thomas B. Hurst, Akron, and Roy G. Winklepleck, Hudson, Ohio, assignors to The Babcock & Wilcox Company, New York, N.Y., a corporation of New Jersey
Filed Nov. 7, 1966, Ser. No. 592,535
6 Claims. (Cl. 55—227)

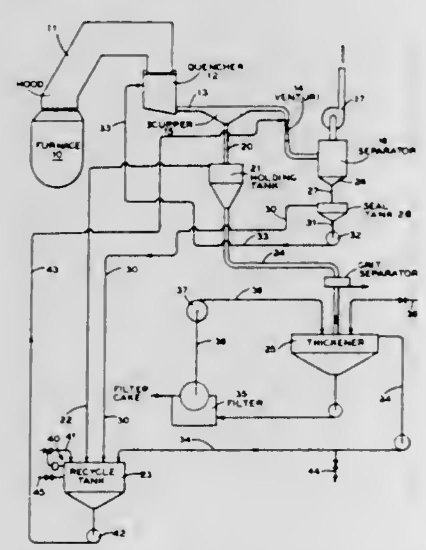

Apparatus for removing entrained solids from hot gases, and in particular wet scrubbing apparatus for removing solids from cyclically or intermittently produced hot gases where recirculated water is used for cooling the gases and removing the entrained solids from the gases.

3,396,515
AIR DRYER
Neal A. Wright, 1346 10th Ave., Columbus, Ga. 31901
Filed Mar. 23, 1967, Ser. No. 625,379
2 Claims. (Cl. 55—269)

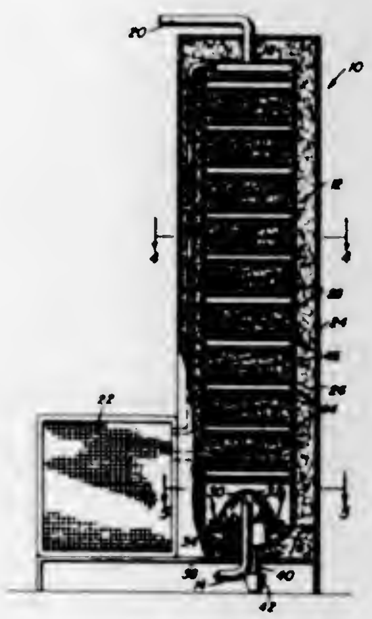

Apparatus for removing moisture, contaminants and the like from air wherein an elongated coil cooled tank is utilized in conjunction with a series of baffles, each of which incorporates cooperating baffle plates which selectively increase the air speed and direct the flow so as to in effect sling the moisture therefrom as the air progresses through the tank.

3,396,516
BAGHOUSE APPARATUS
Wade E. Ballard, Rolling Hills, Calif., assignor to Menardi & Company, Torrance, Calif., a corporation of California
Filed Aug. 2, 1966, Ser. No. 569,660
2 Claims. (Cl. 55—302)

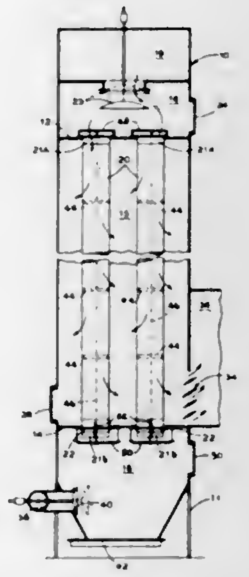

This invention involves the construction and mounting of anti-collapse metal rings positioned within but separate from a tubular filter bag of gas-pervious fibrous material through which a gas flow is periodically reversed to clean the bag of accumulated particulate matter.

3,396,517
FILTERS
Louis Schwab, Orlando, Fla. (% CRS Industries, Inc., 101 S. Front St., Philadelphia, Pa. 19106)
Filed Jan. 29, 1964, Ser. No. 340,923
3 Claims. (Cl. 55—368)

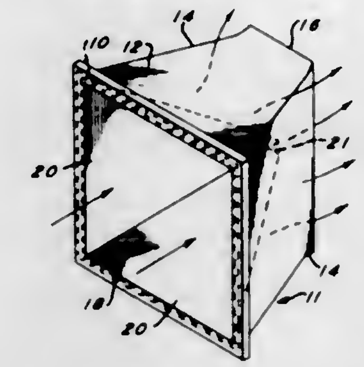

A filter for liberating solid particles suspended in an air flow in which an inner hollow member of rectangular cross section and truncated-pyramidical shape open at both ends is nested in a hollow outer member also of rectangular cross section and truncated-pyramidical shape but less tapered than the inner member to define an air space between the two members. The outer member is open at its wide end but closed at its narrow end by a flat end wall. The two nested members are secured at their wide ends to a rectangular frame and are substantially coextensive with the opening of the frame. Both members are made of air permeable fabric, the porosity of the outer member being less than that of the inner member. The open area of the narrow end of the inner end being small in comparison with the open area at the wide end of the outer member which, in turn, is small in comparison with the total air permeable area of the side walls and the end wall of the outer member.

3,396,518
ROTARY POWER LAWN MOWER
Earl B. Johnson, R.D. 4, Box 252, Freehold, N.J. 07728
Filed Apr. 21, 1965, Ser. No. 449,816
5 Claims. (Cl. 56—25.4)

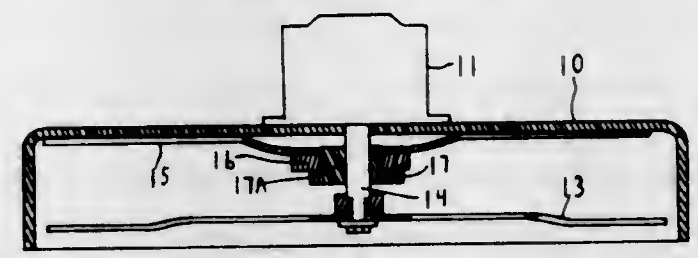

1. A rotary mower comprising a housing, a motor, motor shaft and a horizontal cutting blade secured to said shaft and within the housing and a resilient scraper carried by said shaft, said scraper having a ring bearing, the axis of which is offset from the axis of said shaft, and engageable by and actuated in an eccentric circular movement by a cam bearing secured to said shaft and including means for holding said scraper in yieldable and movable contact with said housing.

3,396,519
HEIGHT ADJUSTMENT MECHANISM FOR POWER MOWER VEHICLES
Robert E. Lehman, % Aircapital Manufacturers, Inc., P.O. Box 1070, Tupelo, Miss. 38801
Filed Oct. 23, 1965, Ser. No. 502,928
13 Claims. (Cl. 56—25.4)

1. In combination with a power mower having a wheeled vehicle frame and an engine drivingly connected to a cutter assembly disposed below said frame, means for adjusting the position of the cutter assembly above the ground comprising, a mounting base supporting the engine and the cutter assembly connected thereto, slide means operatively connected to the frame and the mounting base for vertical adjustment thereof, power operating means operatively connected to the slide means for move-

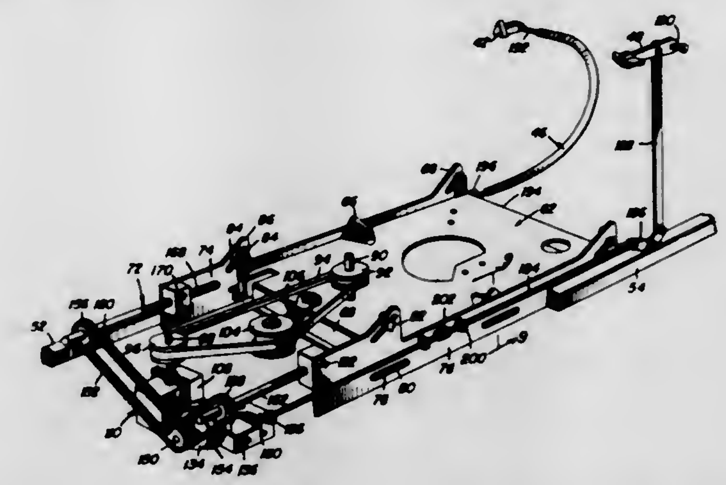

ment thereof in opposite directions between limit positions, power take-off means drivingly connecting the engine to the power operating means, and control means connected to the power take-off means for selectively controlling said movement of the slide means.

3,396,520
APPARATUS FOR THE HARVESTING OF TOBACCO
Clifford E. Vogel, R.F.D. 1, Winchester, Ohio 45697
Filed May 25, 1965, Ser. No. 458,697
5 Claims. (Cl. 56—27.5)

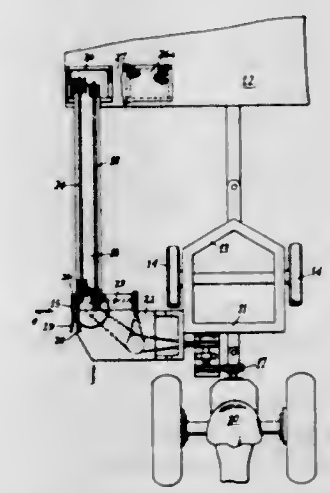

Tobacco harvester having a stalk cutter and a guide causing the cut stalks to fall uniformly and in succession into a horizontal position, and including a pair of counter rotating, horizontally displaced belts for conveying the cut stocks to a suitable receiving member.

3,396,521
HARVESTING MACHINE FOR ROW CROPS SUCH AS BLUEBERRIES
Horace E. McKibben, Grand Junction, and Paul F. Jones, Dowagiac, Mich., assignors to Blueberry Equipment, Inc., South Haven, Mich.
Filed Oct. 23, 1965, Ser. No. 503,041
9 Claims. (Cl. 56—330)

1. A harvesting machine for row crops such as blueberries having a driven and steerable carriage with upright side frames connected by raised cross members and adapted to straddle a crop row and having bush shaking means mounted in said side frames characterized by,

a series of upright carriers movably mounted in said side frames,

means connected to said carriers to move each series in a circuit path with the adjacent opposed inner reaches of each series moving from a forwardly convex path to rearwardly moving generally parallel reaches relative to said carriage,

a plurality of shaker arms mounted on each of said carriers in vertically spaced relation and in outwardly projecting relation relative to said circuit paths,

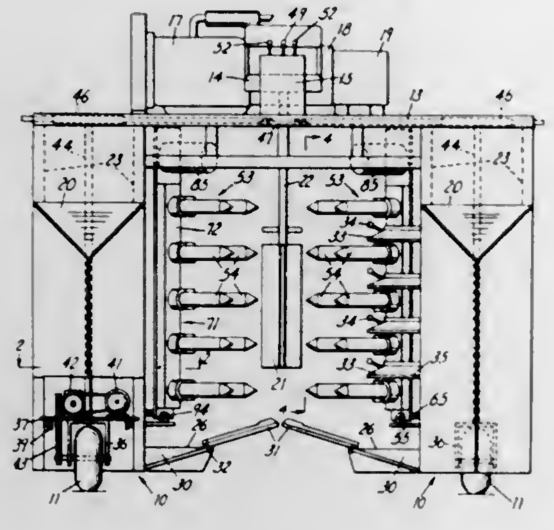

means mounted on said carriers and connected to said arms to move said arms bodily in eccentric orbital paths parallel to their individual longitudinal axes,

first drive means connected to actuate said means for moving said carriers,

second drive means connected to actuate said means for moving said arms,

baffle mans carried by said side frames in position to direct crop elements shaken from the crop rows downwardly along the insides of said side frames,

and conveyor means positioned to receive crop elements from said baffle means and driven to discharge the crop elements to a delivery point on said machine.

3,396,522
STRANDING MACHINE
Albert A. Biagini, 362 Naples St., San Francisco, Calif. 94112
Continuation-in-part of application Ser. No. 531,693, Mar. 4, 1966. This application Jan. 30, 1967, Ser. No. 612,722
21 Claims. (Cl. 57—15)

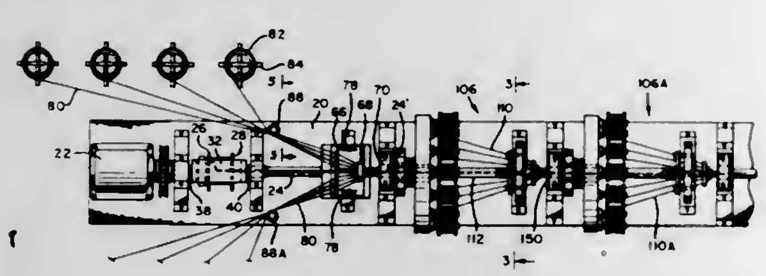

A stranding machine having at least first and second dies and at least first and second relatively rotatable wire supply means for supplying outer wires to the respective first and second dies, with the wires from the first and second wire supply means being applied with different lay distances. A strand setter and preformer having means for guiding a strand along curved paths in substantially quadrature space relation. A twist limiting means comprising one or more sheaves over which a wire or wires from a wire supply means are fed to a wire utilization means to limit twisting of wires by the wire utilization means to that portion between the wire utilization means and twist limiting means.

3,396,523
APPARATUS FOR TWISTING YARN
Frederick Scragg, Trinity, Jersey, Channel Islands, and Walter Parker, Wilmslow, England, assignors to Ernest Scragg & Sons Limited, Cheshire, England, a British company
Filed Feb. 25, 1966, Ser. No. 534,279
Claims priority, application Great Britain, Feb. 27, 1965, 8,542/65
37 Claims. (Cl. 57—34)

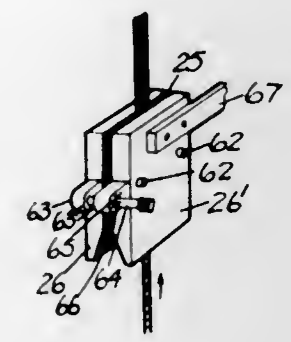

A yarn processing apparatus in which twist means located along a path along which a yarn is advanced in one direction twists the yarn, in which twist stopper means are provided upstream of the twist means for preventing a twist produced in the yarn to pass to the upstream side of the twist stopper means, and in which the twist stopper means includes a pair of opposed wall portions between which the yarn passes to the twisting means and which are spaced apart a distance such that yarn passing therebetween contacts the opposed wall portions and is thereby constrained against twisting.

3,396,524
YARN HEATING MEANS IN TEXTILE APPARATUS
Walter Parker, Wilmslow, England, assignor to Ernest Scragg & Sons Limited
Filed Feb. 28, 1967, Ser. No. 619,337
Claims priority, application Great Britain, Mar. 1, 1966, 9,040/66
16 Claims. (Cl. 57—34)

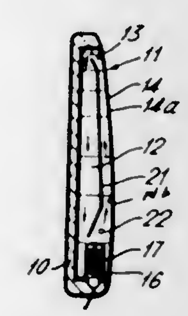

Yarn heating means for yarn processing machines including wall means defining a chamber containing heating fluid. These wall means include a heat conducting member over which a yarn to be heated is guided. Furthermore, a heating element is arranged at one end of the yarn path and the chamber is adapted to be mounted in a yarn processing machine. The chamber also includes means for assisting circulation of the fluid in the chamber.

3,396,525
ACCUMULATOR STRANDING MACHINE
Heinz Seeger, Langenhagen, Germany, assignor to Frisch Kabel- und Verseilmaschinenbau G.m.b.H., Ratingen, Germany, a corporation of Germany
Filed Oct. 6, 1966, Ser. No. 584,699
4 Claims. (Cl. 57—59)

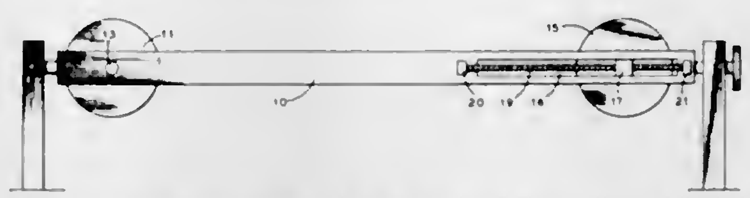

A stranding machine of the accumulator type having sets of pulley wheels mounted on opposite ends of an accumulator frame, the sets of wheels being displaceable to selected positions on the frame to facilitate the stranding operations.

3,396,526
ACCUMULATOR STRANDING MACHINE WITH TWO SETS OF WHEELS
Dietrich Haarmann, Bemerode, Germany, assignor to Frisch Kabel- und Verseilmaschinenbau G.m.b.H., a corporation of Germany
Filed Oct. 6, 1966, Ser. No. 584,856
Claims priority, application Germany, Oct. 8, 1965, F 47,381
7 Claims. (Cl. 57—66)

A strand twisting machine of the accumulator type, with two sets of wheels in displaced relation to each other and arranged for synchronized rotation.

3,396,527
RING TRAVELERS
Charles W. Joseph, Jr., Rock Hill, S.C., and Karl H. Backhaus, Charlotte, N.C., assignors to Celanese Corporation, New York, N.Y., a corporation of Delaware
Filed Oct. 22, 1965, Ser. No. 501,330
5 Claims. (Cl. 57—125)

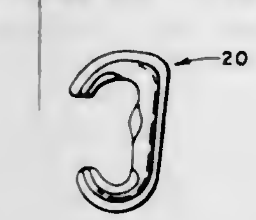

Travelers for use in ring spinning and twisting operations are made from a composition comprising a polyacetal resin containing a minor proportion of fluorocarbon resin.

3,396,528
PERMANENTLY CRIMPED, ELASTIC CHEMICALLY MODIFIED COTTON YARNS
Ernst Weiss, Wattwil, Switzerland, assignor to Heberlein Patent Corporation, New York, N.Y., a corporation of New York
No Drawing. Original application June 21, 1962, Ser. No. 204,079. Divided and this application Sept. 12, 1963, Ser. No. 311,934
11 Claims. (Cl. 57—139)

1. Permanently crimped, elastic chemically modified cotton yarn, said cotton yarn being etherified or esterified by acetylation, benzylation, or cyanoethylation.

3,396,529
ELASTIC YARN PROCESS AND PRODUCT
Otto T. Stutz, Wattwil, Switzerland, assignor to Heberlein Patent Corporation, New York, N.Y., a corporation of New York
No Drawing. Filed Dec. 29, 1965, Ser. No. 517,422
Claims priority, application Switzerland, Jan. 13, 1965, 421/65
24 Claims. (Cl. 57—140)

A process comprising temporarily high-twisting a synthetic multifilament yarn having at least one coarse filament with a titer greater than 6 denier and a plurality of finer individual filaments having a titer less than 6 denier, heat-setting the highly twisted yarn, and then releasing the twist; and synthetic multifilament yarns so produced.

3,396,530
METHOD FOR PRODUCING PERMANENTLY CRIMPED, ELASTIC CHEMICALLY MODIFIED COTTON YARNS
Ernst Weiss, Wattwil, Switzerland, assignor to Heberlein Patent Corporation, New York, N.Y., a corporation of New York
No Drawing. Filed June 21, 1962, Ser. No. 204,079
Claims priority, application Switzerland, Nov. 13, 1961, 13,129/61
8 Claims. (Cl. 57—156)

1. A method for producing a permanently crimped chemically modified cotton yarn, which comprises highly twisting a thermoplastic chemically modified cotton yarn, subjecting the yarn in high-twisted condition to temperatures between about 200 and 280° C. for a period sufficient to set the twist therein and subsequently untwisting the so heat-set yarn to substantially the extent of its high twisting, said yarn being esterified or etherified by acetylation, benzylation, or cyanoethylation.

3,396,531
DIAL TRAIN DRIVE
Heinz Meitinger and Josef Egger, Pforzheim, Germany, assignors to The United States Time Corporation, Waterbury, Conn., a corporation of Connecticut
Original application Aug. 24, 1964, Ser. No. 401,747, now Patent No. 3,298,170. Divided and this application May 12, 1966, Ser. No. 565,364
Claims priority, application Germany, Nov. 3, 1962, U 9,367
3 Claims. (Cl. 58—28)

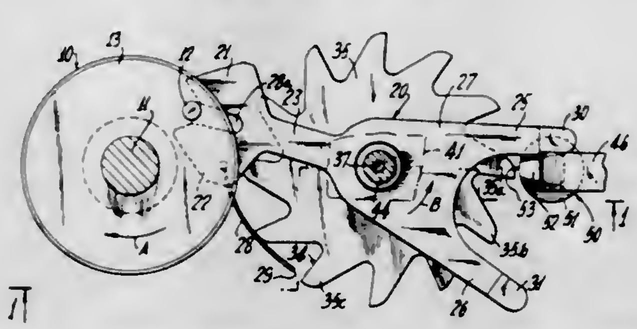

A timekeeping instrument, such as a watch, includes an oscillator, such as a balance wheel. The oscillator has a pin or other means to act on a lever. The lever acts on an index wheel to rotate the wheel. A single magnet is used to attract and temporarily lock the index wheel and the lever.

3,396,532
COMBUSTION AIR SYSTEM
Kurt Munk, Stuttgart-Unterturkheim, Germany, assignor to Geratebau Eberspacher OHG, Esslingen (Neckar), Germany
Filed June 6, 1966, Ser. No. 555,350
Claims priority, application Germany, June 4, 1965, G 43,795
6 Claims. (Cl. 60—13)

A combustion air system for a four stroke cycle internal

combustion engine includes a combustion air compressor having a high pressure discharge arranged centrally between four in-line cylinders. The central high pressure air discharge is connected through two divergent feed lines which are connected at their outer ends to short inlet passages connecting the inlet ports of the outer two cylinders on each side. A feature of the construction

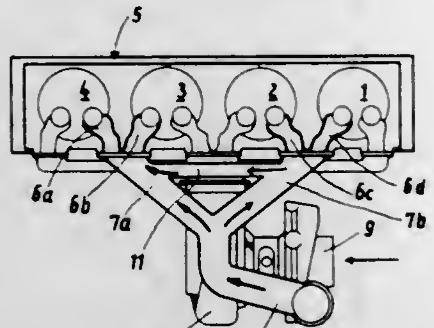

is the use of a short circuit line connected in the shortest straight path between the two feed lines. This short circuit line insures that each of the divergent feed lines will provide a fluid under pressure to whichever of the inlet ports is open and there will not be any sudden decrease of pressure in one of the lines which will cause an unbalance in the combustion system.

3,396,533
SPEED BOOST CONTROL FOR AN ENGINE EXHAUST DRIVEN TURBOCHARGER
Walther C. Fischer, Janesville, Wis., assignor to Fairbanks Morse Inc., New York, N.Y., a corporation of Delaware
Filed Aug. 17, 1966, Ser. No. 573,009
6 Claims. (Cl. 60—13)

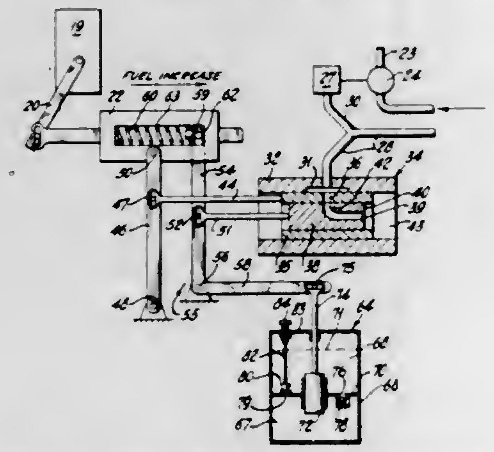

In an internal combustion engine including an engine driven fuel control governor and an exhaust driven turbocharger supplying scavenging and combustion air to the engine, the provision of a control system effective in response to rapid fuel increasing operation of the governor under conditions of engine starting and sudden or rapid increase in engine loading, to cause delivery of a pressure fluid (as compressed air) to the tubocharger for promoting rapid acceleration of the tubocharger to an operating speed assuring adequate air supply to the engine under said conditions.

3,396,534
AIR IMPINGEMENT NOZZLE ARRANGEMENT FOR A TURBOCHARGER COMPRESSOR AND AN IMPROVED METHOD OF EMPLOYING AIR IMPINGEMENT
Elmer R. Bernson, Washington, and Hans W. Engel, Peoria, Ill., assignors to Caterpillar Tractor Co., Peoria, Ill., a corporation of California
Filed Apr. 20, 1967, Ser. No. 632,353
9 Claims. (Cl. 60—13)

A turbocharger rotor housing having a generally cylindrical rotor chamber with a bladed rotor therein, the rotor housing having a plurality of air impingement nozzles about the periphery of the rotor chamber for directing air onto the blades of the rotor wherein each nozzle is in communication with the rotor chamber at a location along one of a preselected number of radii emanating normally from the axis of the rotor and dividing the rotor chamber

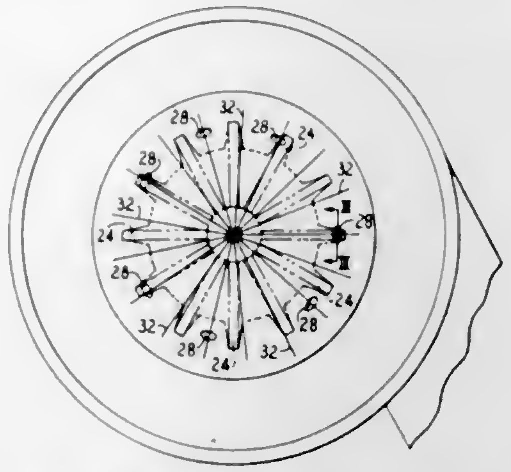

into equal sectors, the preselected number of radii being a prime number with respect to orders of vibration representative of the natural frequency of vibration of the rotor blades and a preselected rotational speed range of the rotor during which range air passes through the nozzles to impinge the rotor blades.

3,396,535
ENGINE EXHAUST SYSTEM
Louis W. Milos, 152 Mahar Ave., Clifton, N.J. 07011
Filed June 16, 1966, Ser. No. 558,063
7 Claims. (Cl. 60—30)

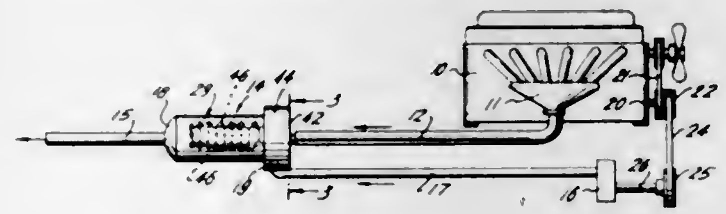

An exhaust system for an internal combustion engine, such system eliminating combustible gases from the exhaust gases by oxidizing and/or burning them, such system also substantially deadening or muffling the sound of the exhaust. The system includes an elongated shell or housing with an elongated sleeve disposed coaxially therewithin, the sleeve having a plurality of openings through its sidewall and within the chamber, outwardly expanding funnel-shaped extension tubes projecting outwardly and rearwardly from the sleeve around each opening. Air is introduced into the entrance end of the housing so as to flow longitudinally thereof and to mix with the exhaust gases which travel outwardly through said funnel-shaped extension tubes, the air being supplied in stoichiometric amounts so that the combustible gases and vapors in the exhaust are completely burned within the housing. Preferably such combustion air is supplied by a blower which is driven by and in timed relationship with the engine.

3,396,536
HYDRAULIC TRANSMISSION
Wendell E. Miller, Norman L. Walter, and Richard K. Tessmann, Hutchinson, Kans., assignors to The Cessna Aircraft Company, Wichita, Kans., a corporation of Kansas
Filed Aug. 8, 1966, Ser. No. 581,126
11 Claims. (Cl. 60—53)

Hydraulic system components for assuring adequate lubrication of the moving parts of housing enclosed

pumps and motors in the system by delivering hydraulic fluid directly into the interiors of the housings, and by

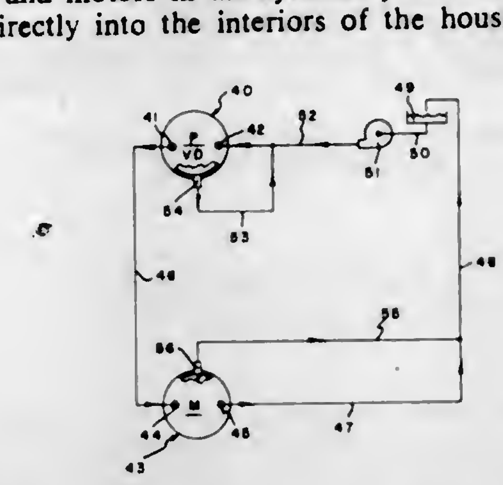

restricting outflow of fluid from the housings to maintain them full of fluid during system operation.

3,396,537
HYBRID FUEL II
Kenneth J. Lissant and Thomas J. Bellos, St. Louis, Mo., assignors to Petrolite Corporation, Wilmington, Del., a corporation of Delaware
No Drawing. Filed Aug. 14, 1963, Ser. No. 302,001
25 Claims. (Cl. 60—216)

1. A jet and rocket thixotropic emulsion fuel comprising (1) a hydrazine, (2) an emulsifiable oil phase material, and (3) an emulsifying agent, said fuel emulsion having the characteristics of a solid fuel when at rest and the characteristics of a liquid fuel when a force is exerted on it.

3. The jet and rocket thixotropic emulsion fuel of claim 1, also including finely divided aluminum particles, said fuel emulsion having the characteristics of a solid fuel when at rest and the characteristics of a liquid fuel when a force is exerted on it.

3,396,538
WATER INJECTION FOR THRUST AUGMENTATION
Arthur E. Wetherbee, Jr., Newington, Conn., assignor to United Aircraft Corporation, Hartford, Conn., a corporation of Delaware
Filed Oct. 3, 1966, Ser. No. 583,661
6 Claims. (Cl. 60—263)

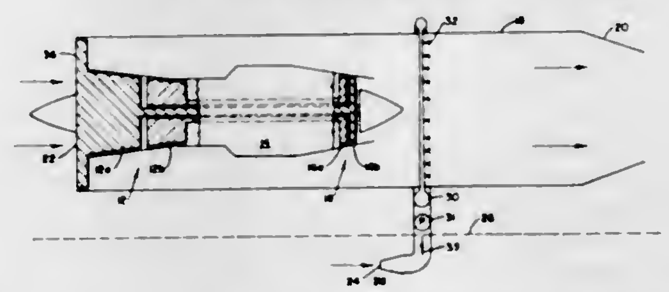

Gas turbine engine thrust augmentation for marine propulsion wherein large amounts of water are injected in a duct between the turbine discharge area and the jet nozzle.

3,396,539
VAPOR BARRIER MEANS FOR UNDERGROUND STORAGE SYSTEM
Amanullah R. Khan, Chicago, Bertram E. Eakin, Naperville, and Phillip J. Anderson, Deerfield, Ill., assignors to Institute of Gas Technology, a not-for-profit corporation of Illinois
Filed Feb. 14, 1966, Ser. No. 527,288
6 Claims. (Cl. 61—.5)

A vapor and liquid barrier structure mounted in an inclined adit between the atmosphere and an underground chamber used for storing liquefied gas at atmospheric pressure and cryogenic temperatures. A rigid outer frame is rigidly secured to the wall, ceiling, and floor of said adit. The outer frame includes a central aperture in which a second rigid frame is received. The second rigid frame, in turn, includes a central aperture therein which is enclosed by a removable plugging member. The joints between the inner and outer frames and between the in-

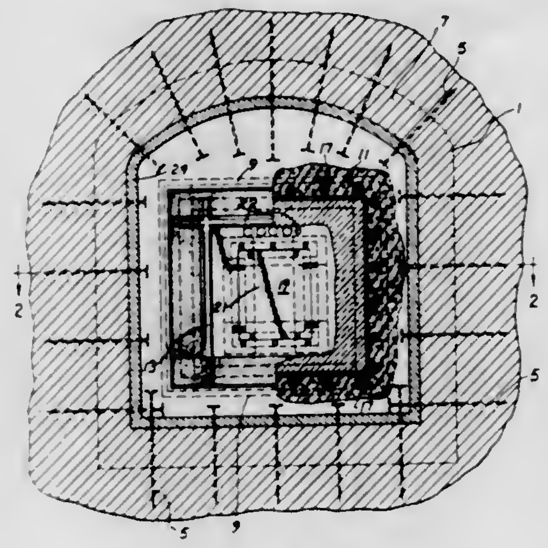

ner frame and the plugging member are sealed by means for preventing passage of liquid and vapor therethrough. Insulation is contiguous with the outer frame, the inner frame, and the plugging member to substantially reduce the transfer heat from the atmospheric side of the barrier to the cryogenic liquefied gas contained within said underground chamber.

3,396,540
MEANS FOR EFFECTING VESSEL MOVEMENT IN A CANAL AND LOCK
Jean Aubert, Paris, France, assignor to Société Anonyme dite: Societe Generale de Traction et d'Exploitations, Paris, France
Filed Mar. 12, 1965, Ser. No. 439,236
Claims priority, application France, Mar. 16, 1964, 967,530
4 Claims. (Cl. 61—8)

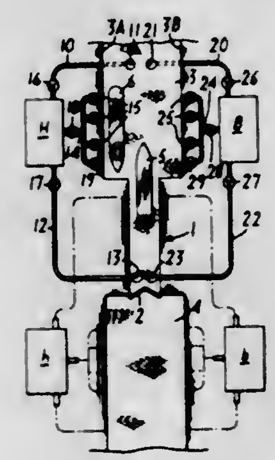

A canal and lock in which water inlet and outlets are disposed for effecting current flows in the lock and canal effective to move vessels in the lock laterally and more than longitudinally between the lock and canal. Water is supplied to the outlet from water-filled reservoirs, connected to said inlet and outlets, at least one of which is higher than the level of the water in the canal and lock and one is lower than this level. The water flow between reservoirs is controlled by controlling the flow at outlets and inlets such that the current flows in the canal and

lock are accomplished while still maintaining the general level of the lock and canal without substantial change.

3,396,541
MEANS AND METHOD FOR CONSTRUCTING SAND DRAINS IN THE EARTH'S SURFACE
Bruce Alexander Lamberton, Berea, Ohio (% Intrusion-Prepakt, Inc., 1705 Superior Bldg., Cleveland, Ohio 44114)
Filed Apr. 19, 1965, Ser. No. 448,974
9 Claims. (Cl. 61—11)

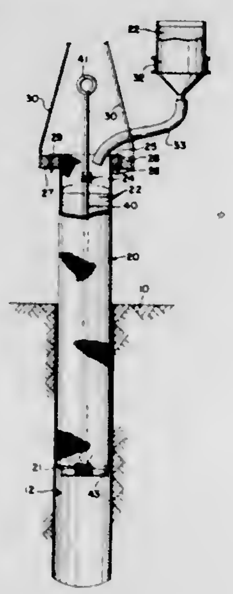

A sand drain comprising a flexible, porous tube of fabric material filled with sand inserted in a hole in the earth. A plurality of tubes may be arranged in side by side relationship around the perimeter of the hole with loose aggregate material in the core or concentric tubes of sand and aggregate may be used. The tube may be formed in a continuous strip, filled with sand and laid in a trench in the earth.

3,396,542
METHOD AND ARRANGEMENTS FOR PROTECTING SHORELINES
Bruce Alexander Lamberton, Berea, Ohio, assignor to Construction Techniques, Inc., Cleveland, Ohio, a corporation of Delaware
Filed Oct. 5, 1965, Ser. No. 493,144
8 Claims. (Cl. 61—38)

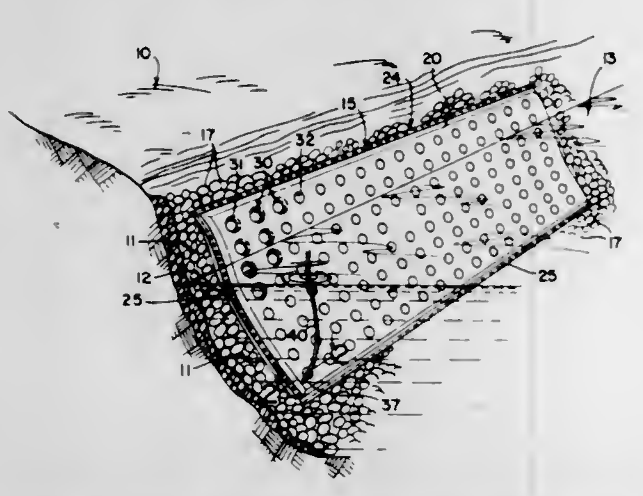

A pair of large sheets of flexible material at least in part porous are joined around their entire outer periphery. The sheets have a plurality of aligned openings therethrough and the two sheets are joined together around the periphery of the openings thereby to define a fully enclosed interior space. A cementitious slurry is injected into the space between the two sheets.

3,396,543
TUNNEL LINERS
Thomas L. White, Youngstown, Ohio, assignor to Commercial Shearing & Stamping Co., a corporation of Ohio
Filed Mar. 17, 1966, Ser. No. 535,093
4 Claims. (Cl. 61—45)

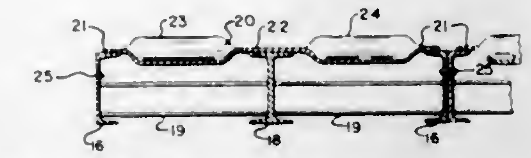

1. A tunnel liner comprising a plurality of generally rectangular skin plates curved longitudinally, each having inwardly extending side flanges and end flanges, an inwardly extending groove on the outer surface of each side flange and end flange, said flanges being fastened together to form with the curved skin plates a cylindrical liner, said grooves of adjacent plates mating to form a continuous passage between the liner plates, an opening in at least one side and end flange of each plate communicating through said flange to said passage, check valve means communicating with said passage and a resilient rubber-like mass filling said passage under pressure and having been pumped therein through said check valve.

3,396,544
STORAGE TANK FIXED ON THE OCEAN BOTTOM AND METHOD OF INSTALLATION
William F. Manning, Dallas, Tex., assignor to Mobil Oil Corporation, a corporation of New York
Filed Nov. 7, 1966, Ser. No. 592,412
26 Claims. (Cl. 61—46)

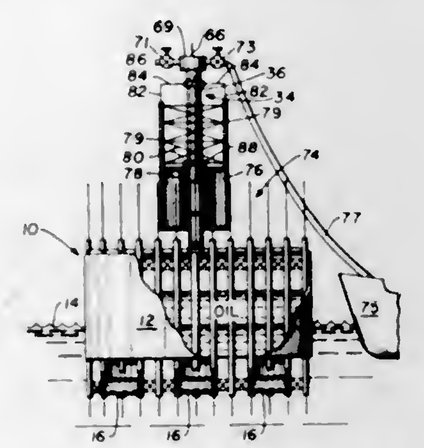

This specification and drawings disclose a storage tank structure to be installed on a marine bottom. Anchoring piles are preinstalled in jackets fixed to the structure, the piles being automatically released, for a later pile setting operation, as the structure comes into full contact with the marine bottom. Also disclosed is a method for lowering the main body of the storage tank structure to the marine bottom utilizing a flotation unit which becomes the buoyant base of a later installed surface terminal for servicing the bottom-anchored equipment. A rigid tether pipe provides mechanical and fluid connection between the surface terminal and the interior of the bottom storage tank structure.

3,396,545
METHOD OF FORMING CONCRETE BODIES
Bruce Alexander Lamberton, Berea, Ohio, assignor to Construction Techniques, Inc., Cleveland, Ohio, a corporation of Delaware
Filed Apr. 7, 1965, Ser. No. 446,346
22 Claims. (Cl. 61—47)

A method of forming concrete bodies wherein a porous fabric form is provided and a cementitious grout having a water cement ratio in excess of 0.45 is pumped into the form until the form is inflated. The pumping is continued until enough of the water of the grout has been expressed outwardly through the pores of the form that

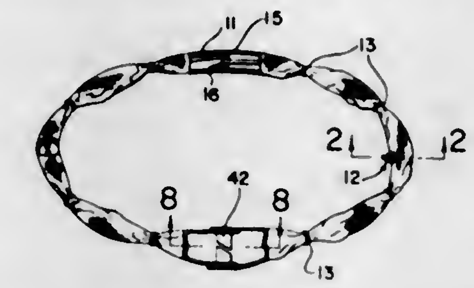

the water cement ratio is reduced to around 0.30 and the grout is no longer flowable and has set up. This set up grout is now allowed to harden into a concrete body.

3,396,546
METHOD OF PRODUCING CONCRETE PILES FOR FOUNDATIONS
Friedrich W. Pleuger, Juthornstrasse 80, Hamburg-Wandsbek, Germany
Filed Aug. 31, 1966, Ser. No. 576,411
Claims priority, application Germany, Sept. 8, 1965 P 36,977
1 Claim. (Cl. 61—53.66)

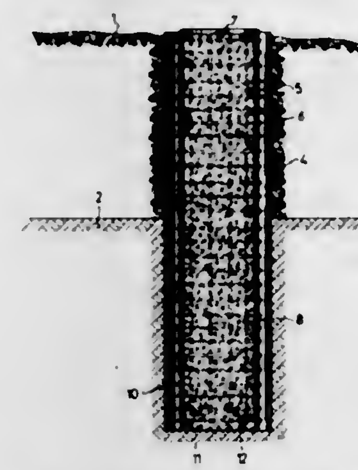

A concrete pile foundation is provided by inserting a drilling tube into the soil, inserting a pipe of soluble synthetic material consisting of a polyvinyl alcohol into a cylindrical cage consisting of welded steel, inserting the cage jointly with the pipe into the drilling tube with concrete, withdrawing the drilling tube and allowing the concrete to solidify and to dissolve the pipe.

3,396,547
COLD TRANSPORT TO A REMOTE LOCATION WITH SMALL TEMPERATURE DROP
Gijsbert Prast and Johan Adriaan Rietdijk, Emmasingel, Eindhoven, Netherlands, assignors to North American Philips Co., Inc., New York, N.Y., a corporation of Delaware
Filed Oct. 7, 1966, Ser. No. 585,055
Claims priority, application Netherlands, Oct. 9, 1965, 6513117
6 Claims. (Cl. 62—6)

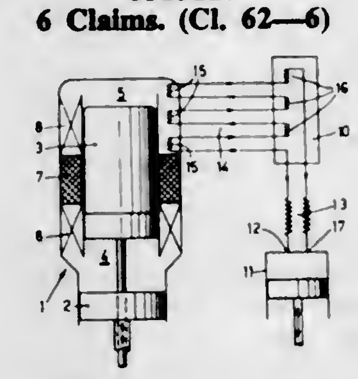

Cold transportation from a cold source to a remotely located place to be cooled having a number of series-connected heat exchangers which are alternately in thermal contact with the source and the remote location. Thus, only a small flow of medium is necessary, and a comparatively small pump is required.

3,396,548
VACUUM DEVICE
Andre Yves Mahe, Caen, Calvados, France, assignor to North American Philips Company, Inc., New York, N.Y., a corporation of Delaware
Filed Aug. 24, 1966, Ser. No. 574,744
Claims priority, application France, Sept. 8, 1965, 30,763
4 Claims. (Cl. 62—55.5)

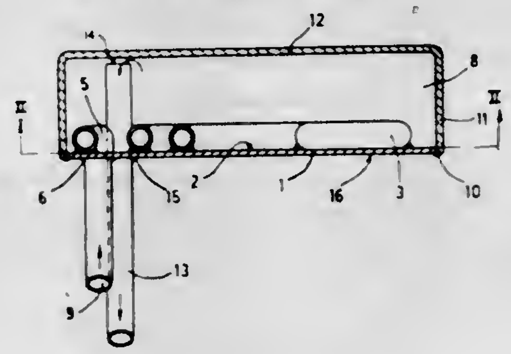

A vacuum device with a cooled wall having a helical flow channel with coolant therein in contact with the cooled wall and a receptacle wherein the coolant in said flow channel empties into the receptacle. A second duct communicating with the receptacle whereby the coolant leaves the device.

3,396,549
MULTIPLE-EFFECT ABSORPTION REFRIGERATION SYSTEMS
William L. McGrath, Syracuse, N.Y., assignor to Carrier Corporation, Syracuse, N.Y., a corporation of Delaware
Filed May 31, 1967, Ser. No. 642,367
7 Claims. (Cl. 62—101)

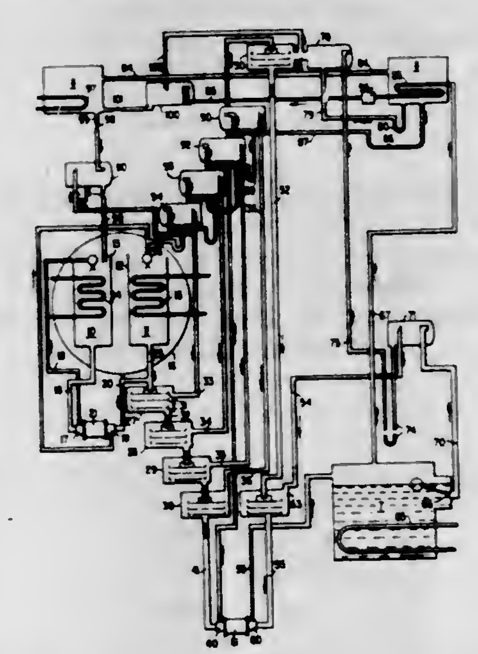

A double-effect absorption refrigeration system having a primary absorber, a primary evaporator, a high pressure generator, a low pressure generator, a high pressure condensing section, and a low pressure condenser, connected to provide refrigeration. A plurality of auxiliary absorber stages are connected in a weak solution line between the primary absorber and the high pressure generator. A plurality of auxiliary evaporator stages are connected in an intermediate solution line between the high pressure generator and the low pressure generator, and a plurality of auxiliary evaporator stages are connected

in a strong solution line between the low pressure generator and the primary absorber. Stages of the auxiliary evaporators are connected by refrigerant vapor passages with the auxiliary absorbers so as to simultaneously concentrate and cool absorbent solution leaving the generator while also simultaneously heating and diluting weak solution passing to the generators. A high pressure refrigerant economizer is employed to evaporate a portion of the refrigerant condensed in the high pressure condenser to cool the remaining refrigerant therein, and the refrigerant vapor is passed to one of the auxiliary absorbers to further dilute and cool solution therein. A low pressure refrigerant economizer is employed to evaporate a portion of the refrigerant condensed in the low pressure condenser to cool the remainder thereof, and the vapor formed therein is passed to another auxiliary absorber to cool and dilute weak solution.

3,396,550
ARRANGEMENT FOR REDUCING COMPRESSOR DISCHARGE GAS TEMPERATURE
Richard E. Cawley, Fort Worth, Tex., assignor to Lennox Industries, Inc., Marshalltown, Iowa, a corporation of Iowa
Filed Nov. 1, 1966, Ser. No. 591,227
10 Claims. (Cl. 62—117)

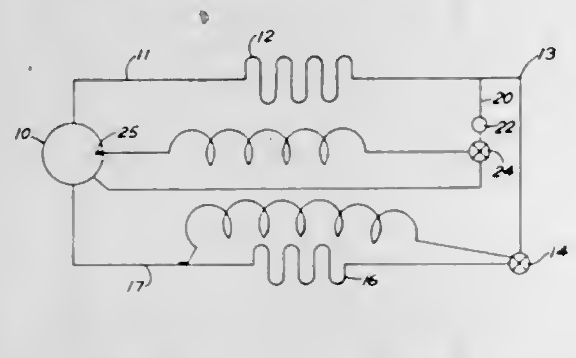

Secondary throttling means for effectively reducing discharge gas temperature by introducing refrigerant into the suction gas in response to increase in the suction gas temperature above a predetermined value in order to maintain a substantially constant predetermined super-heat of the suction gas entering the compression mechanism.

3,396,551
ELECTRICAL TRANSMISSION COOLING SYSTEM
Moses Dimentberg, 347 Cathedral Ave., Winnipeg, Manitoba, Canada
Filed Aug. 19, 1966, Ser. No. 573,658
2 Claims. (Cl. 62—185)

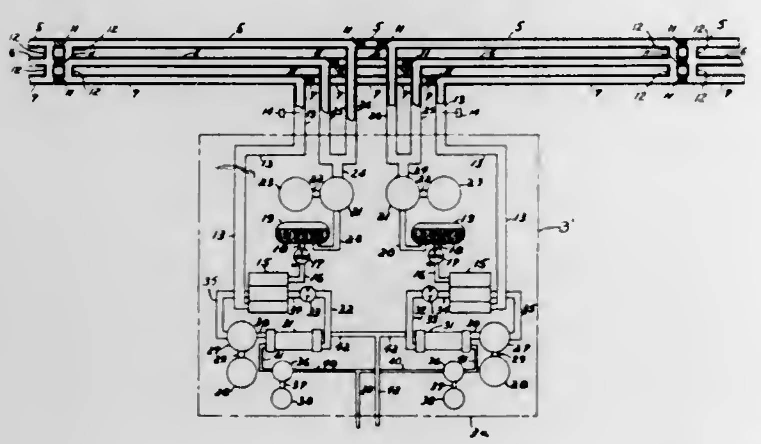

An underground installation of a plurality of tubular conductors for electric current, the conductors containing a fluid refrigerant for cooling the same. At least one refrigerating station is provided and includes a pump for circulating the refrigerant through the conductors.

3,396,552
ADJUSTABLE WATER LEVEL CONTROL FOR ICE MAKER
William J. Buchser, Evansville, Ind., assignor to Whirlpool Corporation, a corporation of Delaware
Filed Aug. 23, 1967, Ser. No. 662,777
14 Claims. (Cl. 62—233)

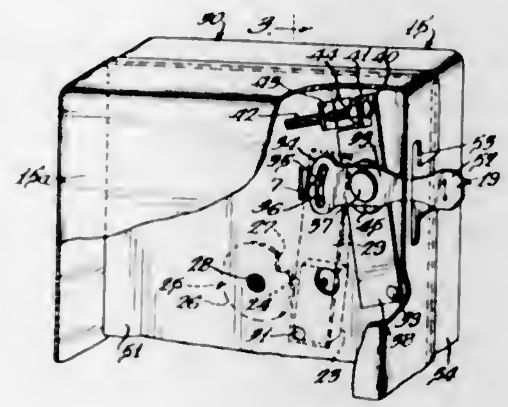

An adjustable water level control for domestic ice makers wherein water is delivered to the mold through a solenoid valve which is controlled by a switch to provide a desired quantity of water in the mold. The switch is mounted in adjustable relationship to a timing cam to provide adjustability of the amount of water delivered to the mold. A readjustment lever is provided which is accessible from exteriorly of the housing enclosing the control for permitting the user to readjust over a limited extent the amount of water delivered to the mold so as to vary the size of the ice bodies made in the mold or accommodate the apparatus to local abnormal conditions, such as high or low water pressure.

3,396,553
UNIVERSAL DRIVE UNIT
George A. Potter, Denver, Colo. (860 Orion St., Golden, Colo. 80401)
Filed May 12, 1966, Ser. No. 549,555
10 Claims. (Cl. 64—6)

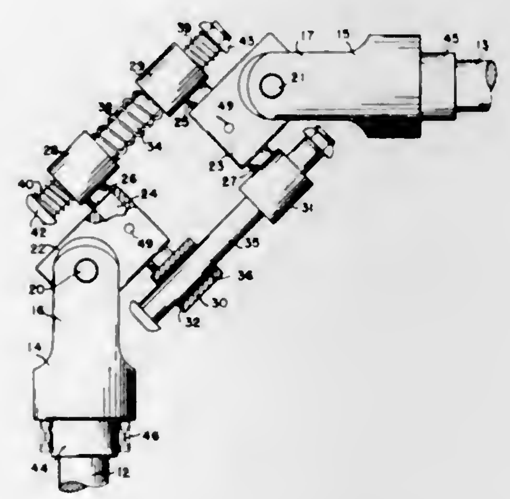

For power transmission between angularly disposed or non-aligned shafts, a universal joint unit in which straight axis guide rods interconnect separate yoke members and in which the guide rods are permitted to move reciprocally to accommodate changes in the effective distance between components of the universal drive unit as the components are rotated.

3,396,554
RETAINING RING FOR A UNIVERSAL JOINT MEMBER
Kenneth L. Westercamp, Saginaw, Mich., assignor to General Motors Corporation, Detroit, Mich., a corporation of Delaware
Filed Apr. 14, 1966, Ser. No. 542,615
5 Claims. (Cl. 64—7)

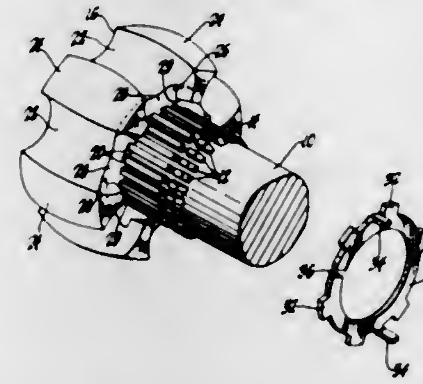

A universal joint inner race has a splined bore for receiving a splined shaft. The shaft includes an annular groove which receives a portion of a split retaining ring. The retaining ring includes a plurality of radial projections which are insertable into axially relieved slots formed in the inner race and are rotatable into a plurality of adjacent internal groove segments formed in the inner race to axially lock the inner race to the shaft. A locking tab on the ring is deformable into engagement with the splines to lock the ring against rotation.

3,396,555
TWIN-JOINT FOR RESILIENT TRANSMISSION OF TORQUE
Antonio Boschi and Giovanni Martorana, Milan, Italy, assignors to Società Applicazioni Gomma Antivibranti (SAGA) S.p.A.
Filed Feb. 3, 1967, Ser. No. 613,901
2 Claims. (Cl. 64—14)

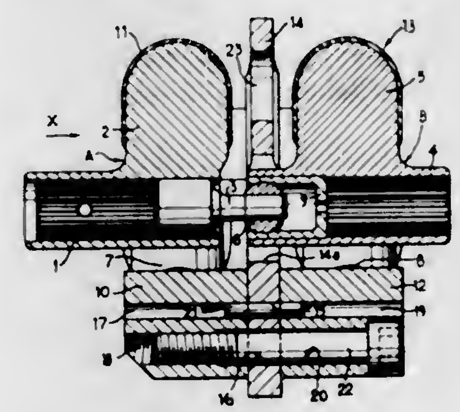

Alternate apexes of a pair of co-axially arranged polygonal resilient component joints are removably rigidly connected to the opposed faces of a rigid disc or plate interposed between said component joints; the connections are established while subjecting said apexes to predetermined radially inwardly directed displacements thereby to introduce pre-compression stresses into the component joints.

3,396,556
FLEXIBLE COUPLING
Raymond W. Giegerich, South Haven, Mich., assignor to Lovejoy Flexible Coupling Company, Chicago, Ill., a corporation of Illinois
Filed Sept. 6, 1966, Ser. No. 577,482
3 Claims. (Cl. 64—14)

A laterally and torsionally flexible coupling for connecting two shafts includes two coupling heads drivingly connected by an intermediate resiliently yieldable spider formed with lugs intermeshing with jaws on the respective heads. Compressible spacers projecting axially from the

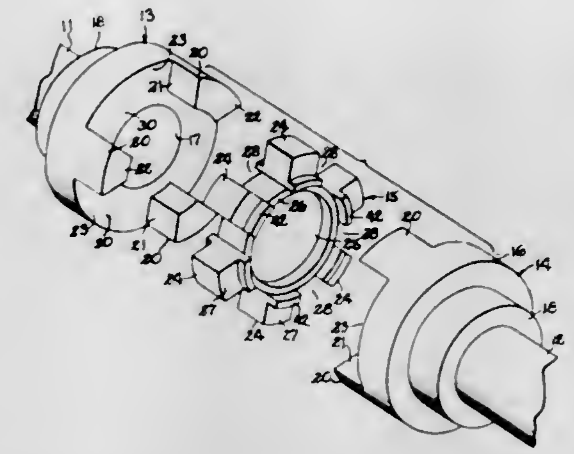

spider engage either one or both heads to establish gaps between the spider and the heads and to reduce and thrust applied to the coupling as a result of bulging of the spider.

3,396,557
ADJUSTABLE SLIP CLUTCH FOR ROTARY TOOLS
Robert G. Moores, Jr., Cockeysville, Md., assignor to The Black and Decker Manufacturing Company, Towson, Md., a corporation of Maryland
Filed Aug. 19, 1966, Ser. No. 573,554
12 Claims. (Cl. 64—30)

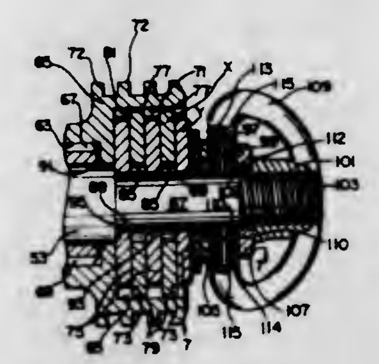

The device disclosed herein is a power operated tool including a rotary input and a rotary output interconnected by a transmission. The output is adapted to have a tool bit (e.g. a drill bit) interconnected therewith while the transmission includes a friction type clutch device adapted to slip when a predetermined resistance torque load is imposed on the tool bit. In addition, means is provided to afford a quick adjustment of the torque level at which the clutch will slip.

3,396,558
YARN FEEDING MECHANISMS FOR FLAT BED KNITTING MACHINES
Robert Cecil Taylor, Blaby, and Anthony S. Brittain, Borbage, England, assignors to Ratby Engineering Company Limited, Earl Shilton, Leicestershire, England
Filed Nov. 9, 1965, Ser. No. 507,071
Claims priority, application Great Britain, Nov. 12, 1964, 46,069/64
19 Claims. (Cl. 66—132)

Flat bed knitting machine having two pairs of nip rollers for positively feeding yarn to needles during to and fro traverses of the cam carriage in respectively opposite directions. An endless chain passed around sprockets and connected with the cam carriage, is provided for driving at least one nip roller of each pair through the medium of one of the chain sprockets and an associated gear train; the machine includes means for separating

the nip rollers of each pair at required times and permitting them to move into cooperative relationship at other

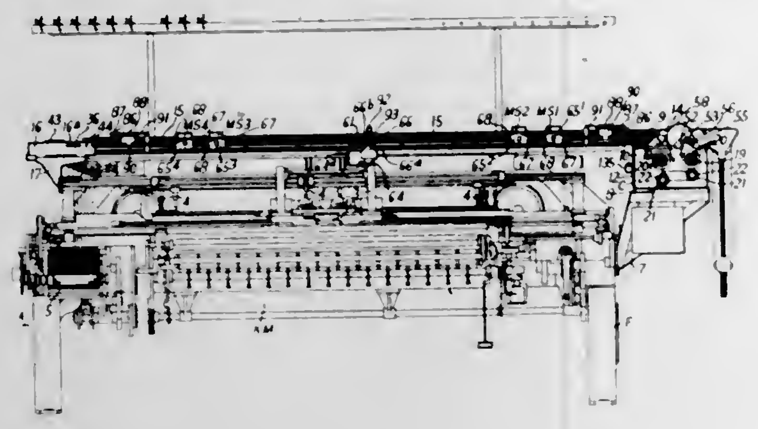

times. The gear train includes a change-gear for controlling stitch and course length.

3,396,559
YARN CUTTING DEVICE FOR CIRCULAR KNITTING MACHINES
Francesco Lonati, 28 Via Val Sorda, Brescia, Italy
Filed Oct. 18, 1965, Ser. No. 497,212
Claims priority, application Italy, Nov. 18, 1964, Patent 739,403
3 Claims. (Cl. 66—134)

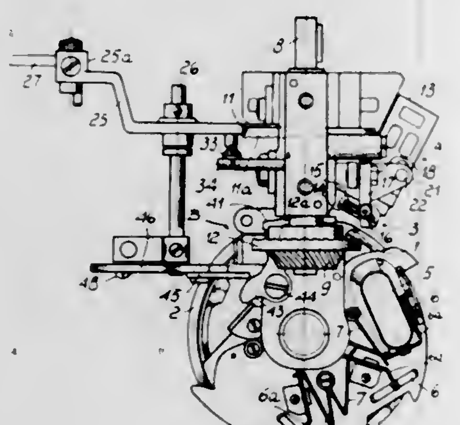

A yarn cutting mechanism for circular knitting machines with a dial assembly comprising means for retention and removal of yarns above the dial and two cutting units actuated by a transmission system cooperating with corresponding cams, said two cutting units being both mounted adjacent the dial assembly with cutting members inside the needle circle, one said unit being disposed with cutting means substantially horizontal and close to the dial and the other with cutting means vertically shiftable and arranged near the edge of the dial itself, and means being provided for giving the cutting blades an oscillatory motion during knitting.

3,396,560
LOCK
Alfred Casalis, 10 Rue de l'Est, Moutier, Switzerland
Filed Sept. 9, 1966, Ser. No. 578,337
1 Claim. (Cl. 70—134)

1. In a lock having a laterally displaceable lock bolt terminated with a locking end, the combination comprising:

(a) key operated means including an actuating pin cooperable with said lock bolt to move it laterally in both directions;

(b) a control member for said lock bolt, said member having a front edge and formed with an upward inclined, rearwardly directed slot opening at said front edge;

(c) means guiding said control member to allow vertical movement only;

(d) said control member having a lower edge disposed to be engaged by said actuating pin for vertical displacement of said control member, and

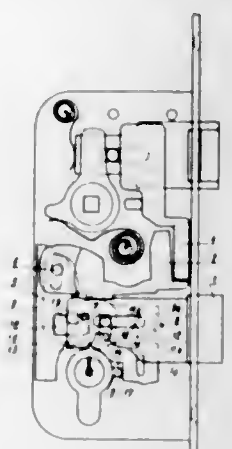

(e) a control pin on said lock bolt projecting therefrom in the direction of said control member, so constructed and arranged that said control pin stands to abut said control member front edge in one position of said lock bolt, engages into said slot upon lifting of said control member and displacement of said lock bolt by said actuating pin and lies at the inner end of said slot when said lock bolt reaches a second position.

3,396,561
HYDRAULIC DIE ASSEMBLY FOR THE FORMING OF SHEET MATERIAL
Lawrence E. Day, Huntington, W. Va., assignor to Houdaille Industries, Inc., Buffalo, N.Y., a corporation of Michigan
Filed May 19, 1965, Ser. No. 457,010
20 Claims. (Cl. 72—63)

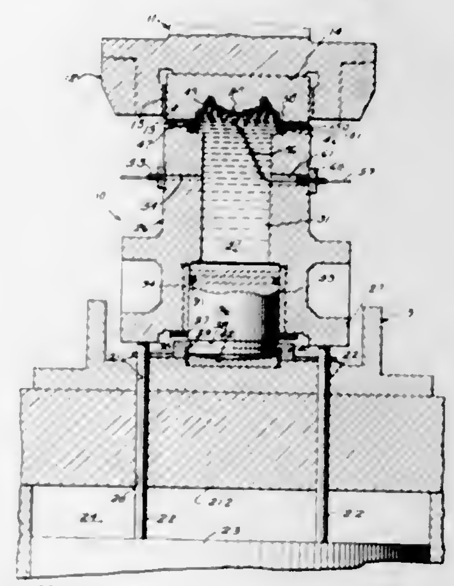

An hydraulic die assembly for installation in a conventional press for the hydraulic forming of sheet material, such as metal, in which the die assembly includes a distensible diaphragm through which hydraulic pressure is transmitted to stretch and form a work blank to the shape of a die cavity. The die assembly includes an upper die, forming a downwardly opening die cavity and having a marginal plane downwardly facing surface; a floating

draw ring having a cylindrical bore opening toward said die cavity and having a marginal upwardly facing plane surface confronting that of the die; a stationary piston in the bore; a flexible diaphragm secured to the top of the draw ring, extending over the bore opening and clamped between said confronting plane surfaces; and a pressure transmitting hydraulic fluid confined in said bore between said piston and said diaphragm and in contact with both thereof; whereby with sheet material clamped between said confronting plane surfaces between said diaphragm and said die cavity opening, fluid pressure is transmitted through said diaphragm to stretch and shape said sheet material to the form of said die cavity.

3,396,562
FLARING TOOLHOLDER
James B. Thigpen, 10471 Christopher St., Cypress, Calif. 90630
Filed Aug. 5, 1966, Ser. No. 570,507
2 Claims. (Cl. 72—71)

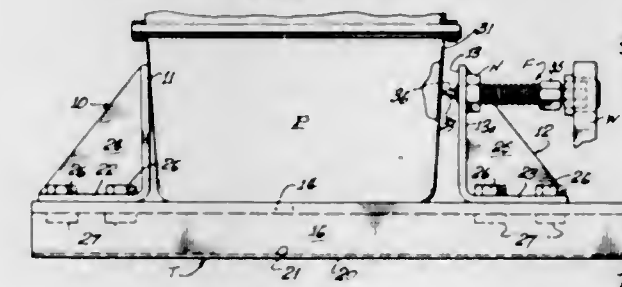

1. A device for the character described for forming a conduit-attachment-aperture in an oil pan which is mounted beneath an engine, said device comprising in combination:

a transverse member adapted to span said oil pan from beneath;

a pair of upstanding support members spaced apart along said transverse member and disposed jointly between them to engage opposite side walls of the oil pan so as temporarily to attach the device therebeneath;

means for adjustably positioning at least one of said support members along said transverse member so as to engage and disengage it from the adjacent side wall of the oil pan in mounting and demounting the device; and

a generally conically-ended wall-piercing member having limit means adapted to effect a predetermined length of penetration, being threadedly carried by one of said support members in position to flaringly penetrate the adjacent side wall of the oil pan upon rotational manipulation of the wall-piercing member after the device is thus mounted beneath the oil pan.

3,396,563
METHOD OF FORMING PROFILED OBJECTS
Erich Tlaker, Springfield, Vt., assignor to The Fellows Gear Shaper Company, Springfield, Vt., a corporation of Vermont
Filed Oct. 21, 1965, Ser. No. 499,176
7 Claims. (Cl. 72—118)

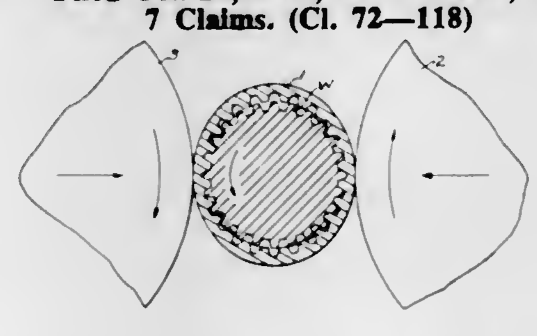

A method of forming profiled work pieces by displacing the work piece material by flow utilizing a flex-ring having a profile which is the complement of the profile to be formed. The flex-ring is elastically flexed inwardly in limited zones as the work piece is fed therethrough in timed relation to the flexing of the ring so that the work piece is progressively formed by material flow to the desired profile.

3,396,564
APPARATUS FOR CONTROLLED COOLING OF METAL STOCK
Charles W. Ritterhoff and Robert D. Romeril, Michigan City, Ind., assignors to Bethlehem Steel Corporation, a corporation of Delaware
Filed Nov. 29, 1965, Ser. No. 510,314
3 Claims. (Cl. 72—201)

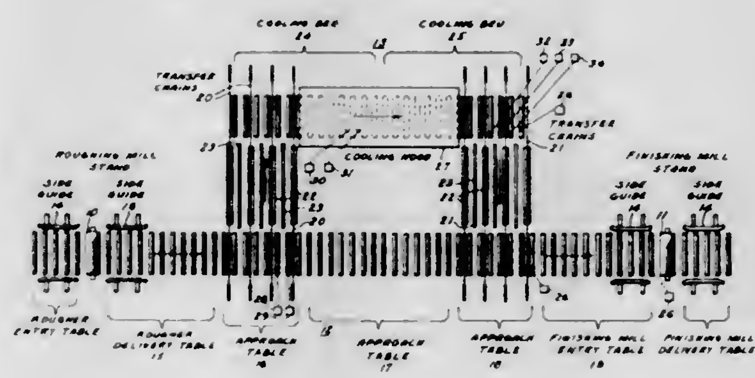

An apparatus for the controlled cooling of plate steel prior to finish rolling thereof comprising an offset roller table and automatic means for transferring the plates to and from said table.

3,396,565
APPARATUS FOR BENDING METAL TUBING
Leonidas C. Miller, % L. C. Miller Co., 717 Monterey Pass Road, Monterey Park, Calif. 91754
Filed Sept. 30, 1965, Ser. No. 491,621
3 Claims. (Cl. 72—216)

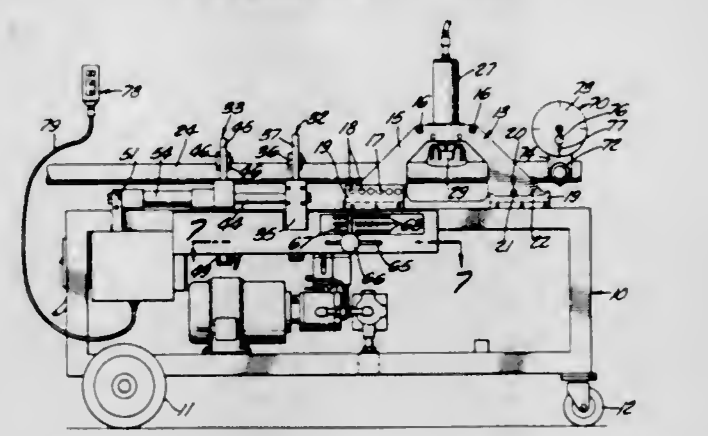

Clamp mechanism for intermittently advancing a tubing axially through a bending frame assembly includes a first clamp device fixed on a stationary frame and a second clamp device reciprocable on the frame, the second clamp device having jaws which float vertically for self-positioning with respect to the tubing.

3,396,566
ROLL CHANGING ARRANGEMENT FOR ROLLING MILLS
James Francis Alsop, Sheffield, and Jack Maltby, Todwick, Sheffield, England, assignors to Davy and United Engineering Company Limited, Sheffield, England
Filed Jan. 24, 1966, Ser. No. 522,740
Claims priority, application Great Britain, Jan. 26, 1965, 3,350/65
3 Claims. (Cl. 72—239)

The disclosure of this invention relates to a turntable for use in rapidly changing the work rolls of a 4-high mill. The disclosure provides a means on the same side of the

mill that the turntable is located for retracting the turntable with its drive means away from the mill so as to allow sufficient space to remove the backup rolls. The disclosure also provides two passages in the turntable; one

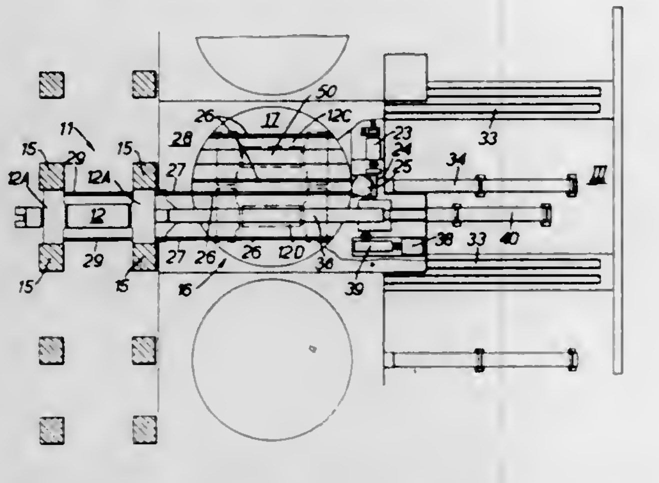

of which passages on the rotation of the turntable is adapted to align itself with a ram employed to withdraw the work rolls from the mill and which passages slidably guide the ram in its movement towards and away from the mill.

3,396,567
APPARATUS FOR THE HEADING OF CONDUCTIVE WORKPIECES
Horst Bachmann, Haan, Rhineland, Germany, assignor to Maschinenfabrik Hasenclever A.G., a corporation of Germany
Filed Dec. 6, 1965, Ser. No. 512,270
Claims priority, application Germany, Dec. 4, 1964, M 63,351
6 Claims. (Cl. 72—318)

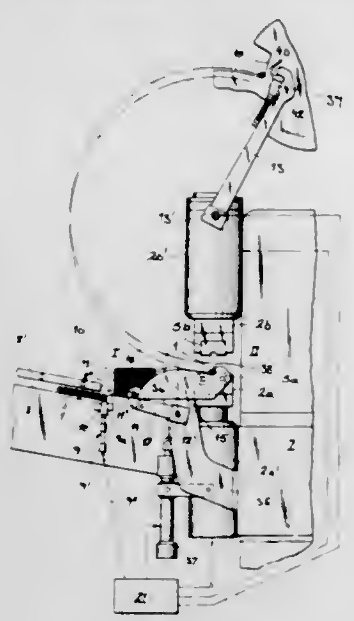

A heading press having an electrical heating system for raising the temperature of an end of the workpiece prior to the application of axial force to the latter and a preheating device adjacent the heading press for inductively heating the end of the workpiece, an automatic system substituting the headed rod for the preheated rod upon completion of the heading and preheating operation.

3,396,568
STOCK TRIMMING APPARATUS
Paul Turner Hahn, Harrisburg, Pa., assignor to AMP Incorporated, Harrisburg, Pa.
Filed Feb. 14, 1966, Ser. No. 527,297
4 Claims. (Cl. 72—335)

Apparatus for trimming and swaging the longitudinal edges of strip stock comprises means for feeding the stock along a predetermined path through a working zone. Two sets of trimming tools and two sets of swaging tools are provided in the working zone, one set of each being provided on each side of the strip stock. Trimming and swaging devices are adjustably mounted for movement relatively towards and away from the strip thereby to permit trimming of the strip to any desired width and

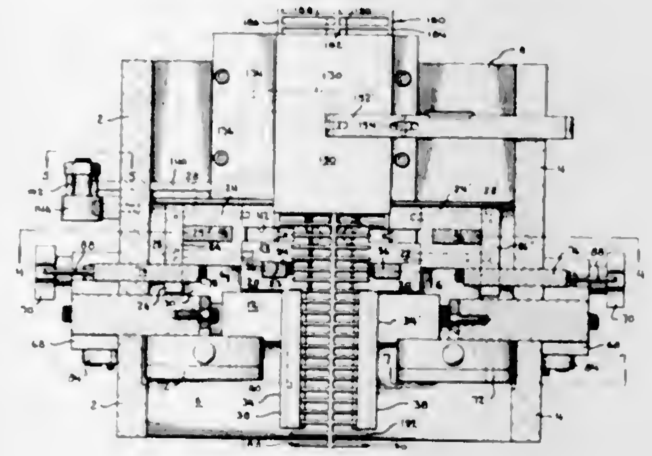

swaging of the edges regardless of the amount of material trimmed from the edges of the strip. Severing device is provided at the entrance to the working zone of the apparatus and upstream, relative to the direction of strip feed, from the trimming tooling so that short lengths of trimmed stock having any desired dimension can be produced.

3,396,569
METHOD OF BENDING TUBULAR WORKPIECES
Peter J. Miller, Toledo, Ohio, assignor to Toledo Heater Company, Toledo, Ohio, a corporation of Ohio
Application July 9, 1964, Ser. No. 381,467, now Patent No. 3,248,920, dated May 3, 1966, which is a continuation-in-part of application Ser. No. 234,305, Oct. 31, 1962. Divided and this application Aug. 27, 1965, Ser. No. 509,231
2 Claims. (Cl. 72—369)

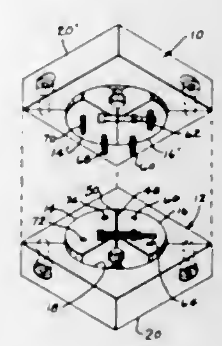

A method of bending tubular workpieces to produce an article in which the original wall thickness is substantially preserved by foreshortening the center line dimension of the workpiece during bending. A compressive force is applied to the workpiece as the bending progresses about a center that lies on or beyond the center line.

3,396,570
NON-GENERATING TOOTH FORMING APPARATUS
Willard B. McCardell, Royal Oak, Mich., assignor to Michigan Tool Company
Filed Aug. 11, 1965, Ser. No. 478,900
23 Claims. (Cl. 72—399)

A non-generating tooth forming apparatus adapted to form external teeth on a workpiece by pivoting simultaneously a plurality of radially disposed tooth forming blades into an external surface on the workpiece so as

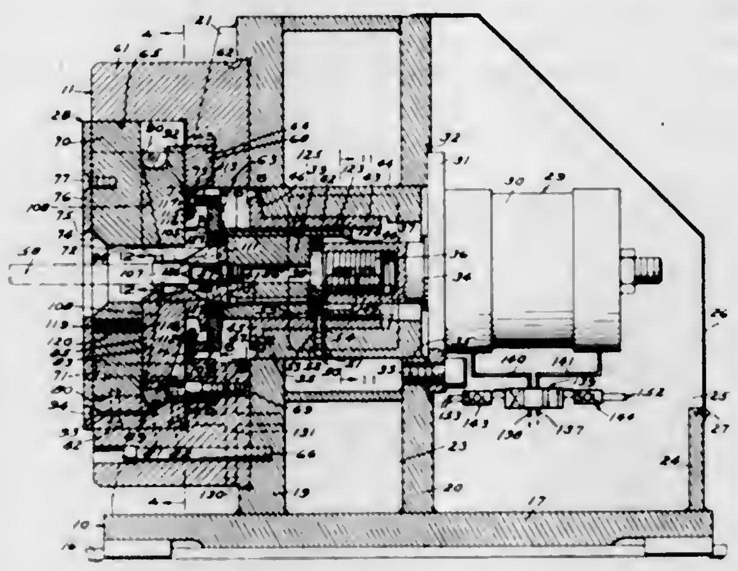

to displace the material of the workpiece between each tooth forming edge of the blade.

3,396,571
COMPRESSION TOOL
Thomas M. Porter, Concord, Mass., assignor to H. K. Porter, Inc., Somerville, Mass., a corporation of Massachusetts
Filed June 29, 1966, Ser. No. 561,560
6 Claims. (Cl. 72—410)

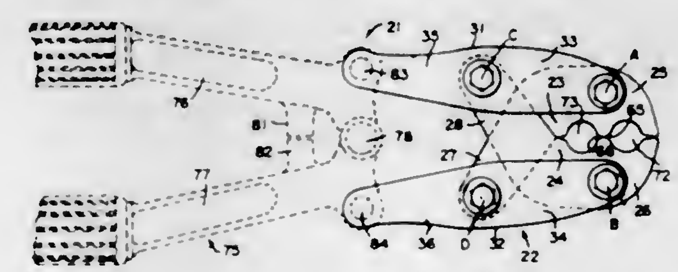

This invention relates to a compression tool of the general type that is adapted to apply pressure to objects positioned between a pair of opposed movable jaws. The particular object of this invention is to provide jaw actuating and linking means whereby the jaws close with a parallel motion—parallel in the sense that the orientation of the jaws one to the other remains substantially the same during the travel of the jaws.

3,396,572
ANGLE ATTACHMENT FOR RIVET GUN
James K. Godsey, 3844 Dismont, Dallas, Tex. 75211
Filed July 21, 1966, Ser. No. 566,926
3 Claims. (Cl. 72—452)

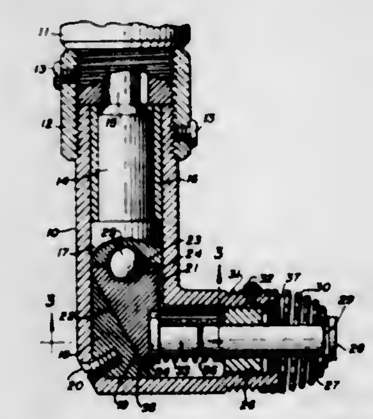

1. An angle attachment for a rivet gun having a projecting reciprocating member, said attachment being comprised of an angular hollow cylindrical body, one leg of which is attached to said rivet gun and receives said reciprocating member, a deflector in the outer corner of said body and having a diagonal surface extending from one leg of said body to the other, a wedge in sliding contact with said diagonal surface, the large end of said wedge being received in that leg of said body including said reciprocating member and the small end of said wedge extending into the remaining said leg, said large end of said wedge having a transverse dimension less than the transverse dimension of the leg in which it is received, means contacting the large end of said wedge with said reciprocating member, a bushing within the extending leg of said body, an outer plunger element in said bushing and extending outwardly of the last said leg, a rivet set on the extending end of said plunger element, means contacting the inner end of said plunger element with said wedge, and spring means urging said outer plunger element inwardly.

3,396,573
CALIBRATION OF BELT CONVEYOR SCALES
Otto J. Blubaugh, Columbus, Ohio, assignor to Jeffrey Galion Manufacturing Company, a corporation of Ohio
Filed Sept. 22, 1965, Ser. No. 489,270
6 Claims. (Cl. 73—1)

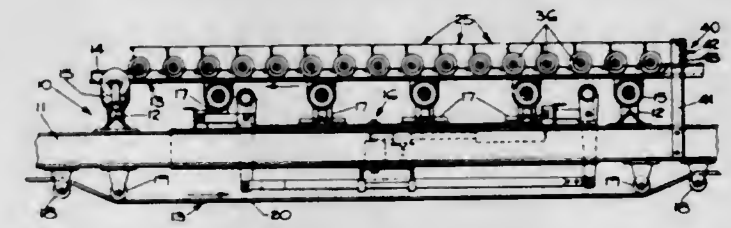

Calibration of a belt conveyor scale, for the weight of material on the conveyor belt, with a plurality of calibration trucks which are arranged in succession along the conveyor belt and over the scale. Each truck has a given weight to impose a uniform loading on the conveyor belt and on the scale.

3,396,574
APPARATUS FOR DETERMINING THE CONDENSATION TEMPERATURE OF A VAPOR IN A GAS
Walter Hanlein, Erlangen, and Joachim Rupprecht, Nuremberg, Germany, assignors to Siemens Aktiengesellschaft, Munich, Germany, a corporation of Germany
Filed July 9, 1965, Ser. No. 470,810
Claims priority, application Germany, July 17, 1964, S 92,095
8 Claims. (Cl. 73—17)

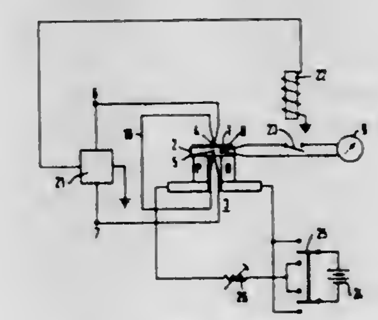

A measuring body having a condensation surface is positioned in a gas, a cooling body includes heat resistance and cooperates with the measuring body for continuously removing heat from the measuring body through the heat resistance and maintains a determined temperature difference between the measuring body and the cooling body. A measuring device in operative proximity with the heat resistance measures temperature. A control arrangement connected to the measuring device and cooperating with the measuring body and the heat resistance

energizes the measuring device at the instant that the determined temperature difference varies due to the appearance of condensation temperature at the condensation surface of the measuring body. The control arrangement comprises a first thermocouple element having a sensing junction contacting the measuring body and a second thermocouple element having a sensing junction spaced from the first thermocouple element and contacting the cooling body. The first and second thermocouple elements are connected in series opposing relation to form a differential thermocouple element for generating an electrical control signal upon the appearance at the condensation surface of the condensation temperature. A switch is connected to energize the measuring body and a switch control applies the electrical control signal to the switch to energize the measuring device.

3,396,575
TESTING TOOL AND METHOD
Robert E. Sjoberg, Anthony S. Girala, Paul V. Ryan, and Donald L. Ross, Houston, Tex., assignors to Hydro-Test, Inc., Long Beach, Calif., a corporation of New Mexico
Continuation-in-part of application Ser. No. 513,192, Dec. 13, 1965. This application Jan. 30, 1968, Ser. No. 707,001
28 Claims. (Cl. 73—40.5)

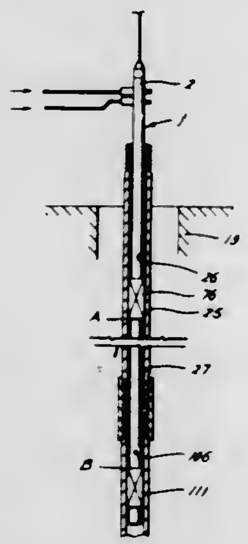

A method is provided for testing a length of pipe for defects, as well as a testing tool apparatus suitable for sc testing. The tool includes a couple of expandable resilient packers which, upon actuation, are adapted to move into sealing engagement with the inner wall of the pipe to be tested, thus defining an annular area of test. A port communicates with this annular area, and through this port testing fluid is introduced to the annular area and the area pressurized. Pressure measurements then reveal any defect in the tested area of the pipe.

The tool provided is actuated quickly by a very small amount of fluid. In various embodiments, the packers are adapted to be set independently or simultaneously. The packers may be left expanded until such time as the tool is to be moved for another test, and the test may be made at any desired pressure, including a pressure less than the pressure used to set the packers.

3,396,576
APPARATUS FOR MEASURING STATIC FORCES DYNAMICALLY
Wilmer C. Anderson, Greenwich, Conn., assignor to General Time Corporation, New York, N.Y., a corporation of Delaware
Filed Sept. 13, 1965, Ser. No. 486,946
6 Claims. (Cl. 73—89)

Apparatus for automatically measuring and plotting static torque output against position of the armature of rotary solenoids. The body of the solenoid is affixed to a strain gauge torque meter. The armature of the solenoid is connected through a gear train to the output shaft of a small electric motor. The small electric motor drives the armature at a rate much slower than it would normally rotate when energized. The motion of the armature is in-

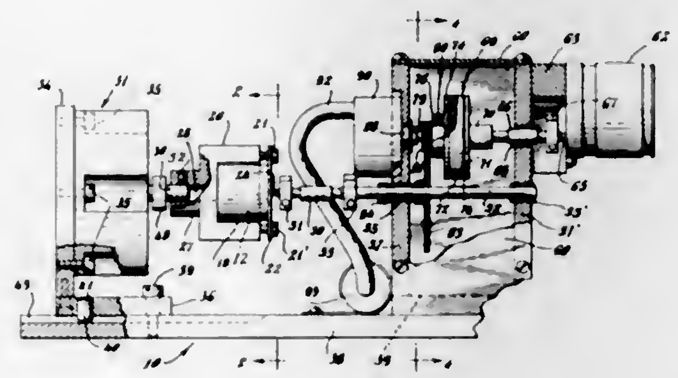

dicated by means of a potentiometer connected to the gear train. A magnetic slip clutch comprising magnets separated by a spacer from a magnetic permeable plate is incorporated into the gear train.

A fixture is also provided for plotting force versus armature position of linear solenoids.

3,396,577
MEASURING AND COMPARATOR DEVICE
Robert D. Brackett, Wakefield, Mass., assignor to Polaroid Corporation, Cambridge, Mass., a corporation of Delaware
Filed Sept. 1, 1966, Ser. No. 576,660
10 Claims. (Cl. 73—141)

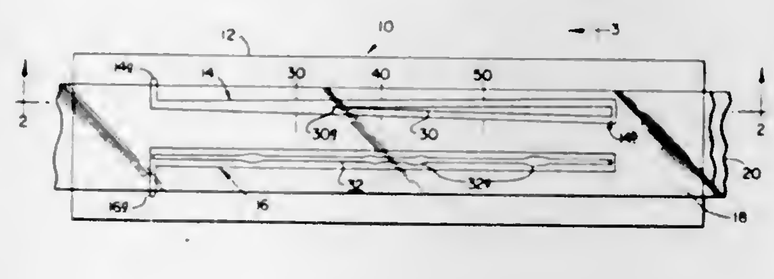

1. An element for use with a pair of resilient adhesive tapes for measuring and permitting adjustment of the dynamic compressive force exerted by a pair of pressure rolls having deformable surfaces, comprising an elongated, thin, generally rectangular, plate-like support component of a given thickness, an elongated slot of given length and width characteristics formed in said plate-like support element so as to extend longitudinally thereof throughout a distance which is at least equal to the circumference of one of said pressure rolls, and a scale comprising a plurality of index marks positioned along said elongated slots relating to the compression of a sheet material to be passed between said pressure rolls, said support component being adapted to have said tapes so affixed to each of its opposite surfaces, in generally aligned relation, as to cover both sides of said elongated slot, said element, when passed endwise between said pressure rolls, deriving therefrom a mutual progressive adhesion of said tapes within a given limited area of said elongated slot, thus forming a test pattern in said tape which is determined as to its length, width and configuration by the width and depth characteristics of said slot, by the surface characteristics of said pressure rolls, and by the dynamic compressive force exerted by said pressure rolls, said test pattern being readable in terms of the indicia of said scale and relating to said dynamic compressive force.

3,396,578
GLUE BOND TESTER
James O. Skundberg, St. Paul, Minn., assignor to Waldorf Paper Products Company, St. Paul, Minn., a corporation of Minnesota
Continuation of application Ser. No. 327,894, Dec. 4, 1963. This application July 11, 1966, Ser. No. 574,862
8 Claims. (Cl. 73—150)

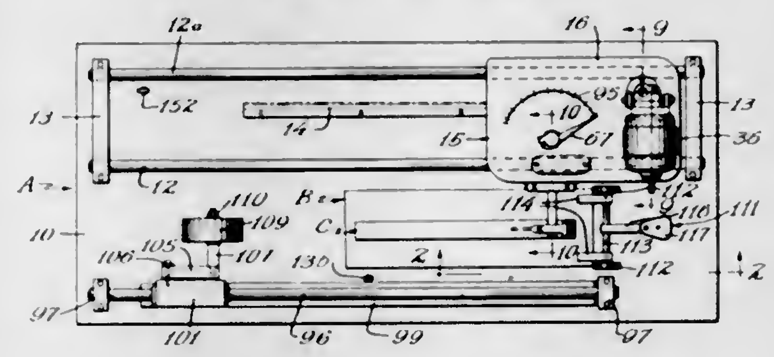

1. A glue bond tester for use in determining the force required to detach an elongated flexible strip from a base sheet to which it is adhered at one end throughout a portion of its length, the tester including:
- a table,
- means adapted to secure said base sheet in face contact with said table with the attached strip extending in a predetermined direction,
- a carriage supported for movement relative to said table along a path parallel to said predetermined direction,
- a means slidably supported by said carriage for movement parallel to said predetermined direction between two extreme positions,
- resilient means urging said slidable means toward one said extreme position,
- attachment means on said slidable means parallel to said table and adapted to engage the other end of said strip and operable upon movement of said carriage, to peel said strip from said base sheet, the pull upon said attachment means tending to move said slidable means toward its other extreme position acting against the force of said resilient means,
- drive means for moving said carriage at a uniform rate along said path,
- and means for indicating the relative movement between said carriage and said slidable means.

3,396,579
MASS FLOWMETER
Daniel Souriau, 58 Rue Ponchet, Paris, France
Filed May 31, 1966, Ser. No. 554,171
Claims priority, application France, May 28, 1965, 18,672
5 Claims. (Cl. 73—194)

A device for measuring the mass flow of a fluid. The fluid is passed through a straight conduit segment, supported by a framework and oscillated about an axis perpendicular to the line of fluid flow. The fluid exerts a force on the walls of the segment, proportional to the product of mass flow of the fluid and instantaneous velocity of the segment, which may be represented as an alternating couple of forces acting perpendicular to the line of fluid flow and perpendicular to the axis of rotation of the segment. The magnitude of the couple of forces is measured by a gyroscope mounted upon the framework so that its precess axis will exert an opposing couple upon the framework. The speed of the gyro rotor is varied until the resultant couple of forces upon the framework is reduced to zero, after which the number of revolutions of the rotor

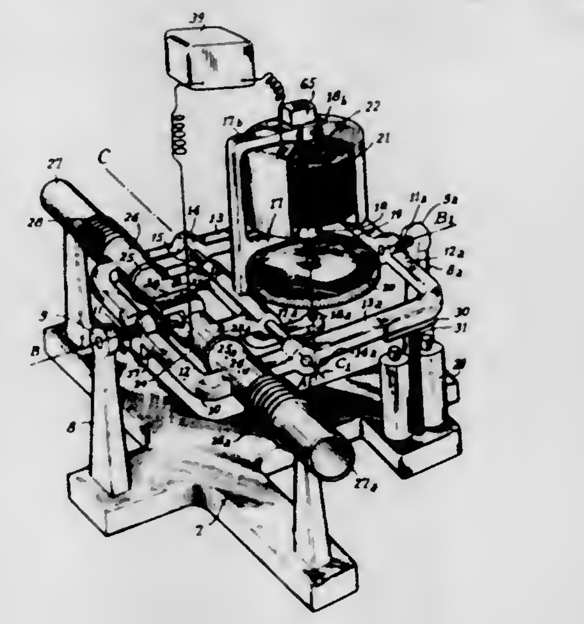

may be counted over a predetermined time as a proportional representation of mass flow of the fluid.

3,396,580
STORAGE AND RELEASE APPARATUS FOR MEASURING DEVICES
Douglas I. Cole, Lyndhurst, Ohio, assignor to General Electric Company, a corporation of New York
Filed July 25, 1966, Ser. No. 567,681
6 Claims. (Cl. 73—343)

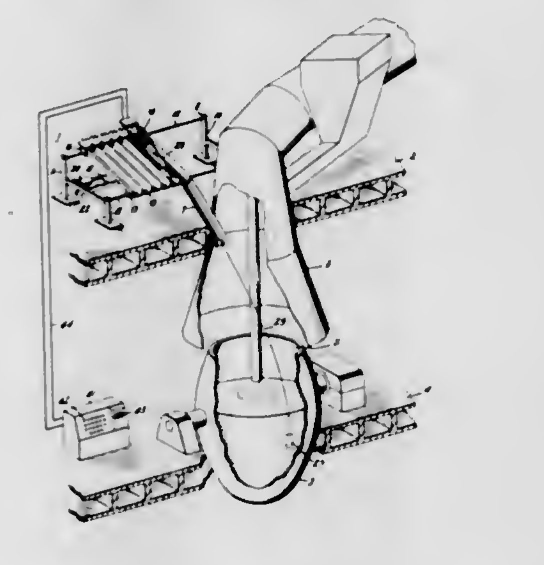

5. In a storage and release apparatus for an expendable electrical measuring device of the type having a parameter measuring means to be discharged into a region where a measurement is desired and flexible leads connected between such measuring means and a recording means, the combination comprising
- a supporting frame;
- a plurality of parallel inclined chutes supported by said frame;
- each of said chutes including means for retaining and selectively releasing a parameter measuring means;
- means on said frame for detachably connecting the leads of each measuring device to a recording means;
- and means cooperating with each chute for directing a parameter measuring means upon its release to a region where a measurement is to be made.

3,396,581
ROTARY KILN THERMOCOUPLE COLLECTOR RING AND BRUSH ASSEMBLY
Henry Clay Iten, Florissant, Mo., and David H. Gieskieng, West Allis, Wis.; said Gieskieng assignor to Allis-Chalmers Manufacturing Company, Milwaukee, Wis.
Filed Dec. 13, 1966, Ser. No. 601,418
3 Claims. (Cl. 73—351)

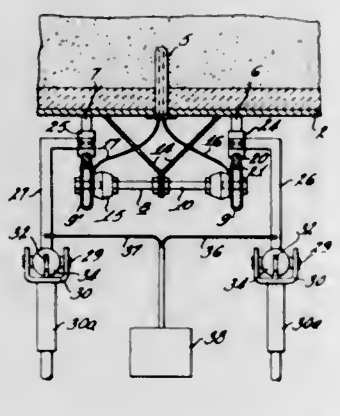

A collector ring attached around a rotary kiln for temperature indicating signals generated by a thermocouple projecting into the kiln, and a stationary signal pickup brush beneath the kiln and inside the rotating ring with the brush having a downward facing concave surface riding on an upward facing convex surface of the rotating ring.

3,396,582
THERMOMETER ASSEMBLY
Theodric W. Louks, Medway, and Ronald E. McLin, Springfield, Ohio, assignors to Mid-Continent Manufacturing Co., a corporation of Ohio
Filed July 25, 1966, Ser. No. 567,460
10 Claims. (Cl. 73—376)

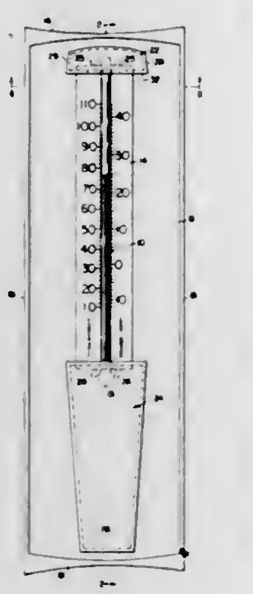

A thermometer assembly including a glass thermometer tube and a backing member having calibration markings, and a clamp for holding the tube in axially fixed position on the backing comprising a body of comparatively rigid material bridging across the thermometer tube and fixed relative to the backing member with a notch shaped to receive said thermometer tube which is of a width greater than the width of the thermometer tube and which has yieldable means located in it and normally spaced apart less than the width of the tube for frictionally engaging and being displaced by the tube as the clamp body is secured to the backing member so as to anchor the tube relative to the calibration markings on the backing.

3,396,583
DIFFERENTIAL FORCE-RATIO TRANSDUCER
Walter A. Hickox, Glen Cove, N.Y., assignor to Aeroflex Laboratories Incorporated, a corporation of Delaware
Filed May 25, 1966, Ser. No. 552,762
9 Claims. (Cl. 73—407)

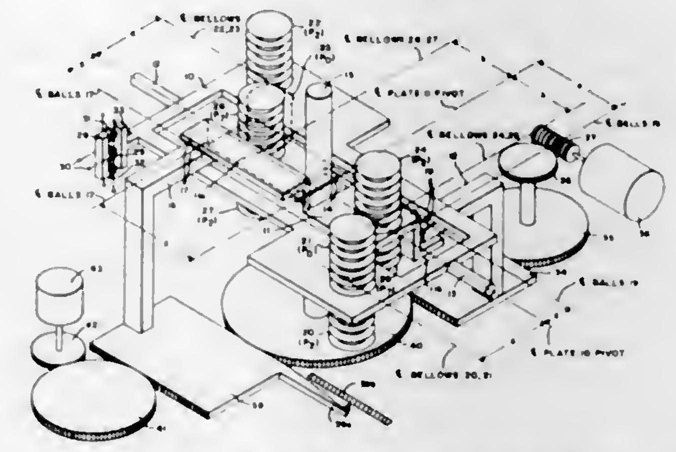

1. A transducer for measuring the ratio of the differences of two pairs of forces comprising:
first and second pivoted members having their pivotal axes extending in directions at a substantial angle to each other;
an antifriction interconnection between said members;
means for differentially applying one of said pairs of forces to said first member in a sense to bias it toward said second member at said interconnection;
means for differentially applying the other of said pairs of forces to said second member in a sense to oppose motion of said first member about its pivotal axis;
and means responsive to pivotal movement of one of said members for adjusting said interconnection in a sense to reduce pivotal movement of said members substantially to zero.

3,396,584
SPACE SIMULATION AND RADIATIVE PROPERTY TESTING SYSTEM AND METHOD
Frank Edward Badin and Franklin Dennis Farnsworth, Frederick, Md., granted to National Aeronautics & Space Administration under provisions of 42 U.S.C. 2457(d)
Filed Feb. 26, 1965, Ser. No. 435,433
4 Claims. (Cl. 73—432)

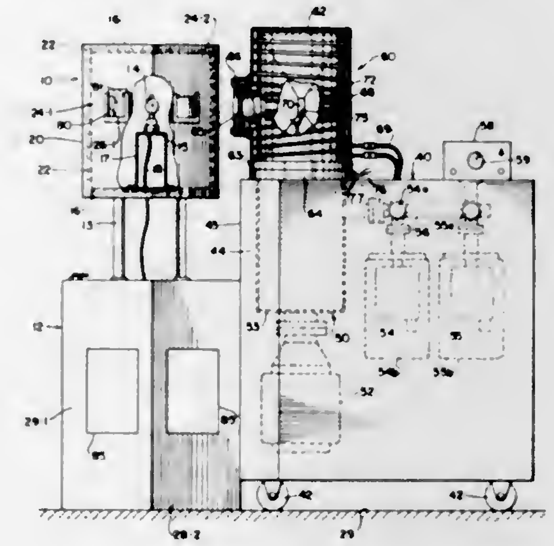

Method and apparatus for testing the heat radiative properties of material under controlled environmental conditions in which the temperature of the specimen is measured in response to irradiation by energy of a first type, the specimen is then irradiated by energy of a second type and then again irradiated by energy of said first type and the temperature measured in response thereto, all while being maintained in said controlled environment and without handling or being exposed to the atmosphere.

3,396,585
SELF-POWERED DRIVE MEANS
George S. Kampas and Lawrence S. Wiswall, Pasadena, Calif., assignors to Magnastatic Corporation, Pasadena, Calif., a corporation of California
Filed June 27, 1966, Ser. No. 560,421
8 Claims. (Cl. 74—3.52)

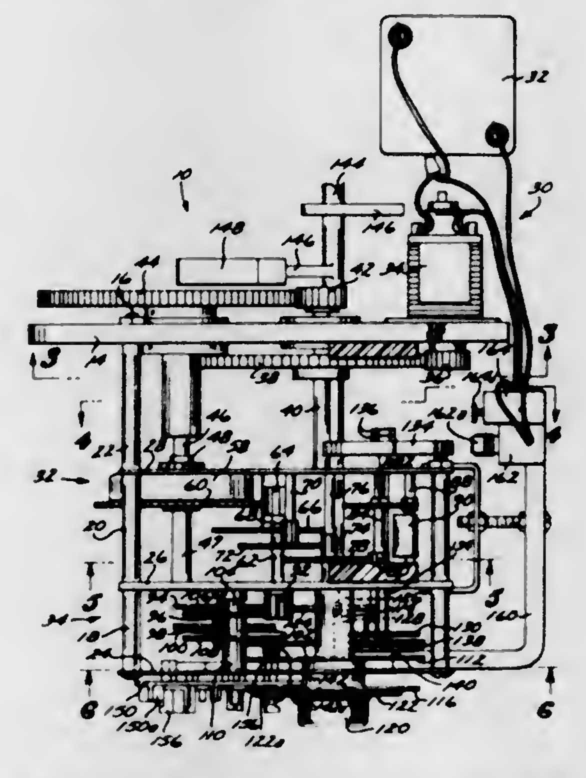

1. A self-powered drive means for use with recycling water softening apparatus and the like comprising in combination, electrically operated motive power means, timing apparatus for connection with said recycling apparatus to periodically initiate recycling thereof, power transmission means operatively interposed between said motive power means and said timing apparatus comprising a drive spring to be wound by said motive power means and connected to said timing apparatus to drive the latter, portable source of electrical power for energizing said motive power means, and control means interposed between said source and said motive power means connected to said timing apparatus to periodically connect said source to said motive power means to wind said drive spring for a predetermined time interval, whereby said timing apparatus can be driven continuously for periodic recycling of said apparatus.

3,396,586
SLIP RING
Ernest Maclin, Paramus, and John L. Bradshaw, Hillsdale, N.J., assignors to General Precision Systems Inc., a corporation of Delaware
Filed Dec. 29, 1965, Ser. No. 517,318
1 Claim. (Cl. 74—5)

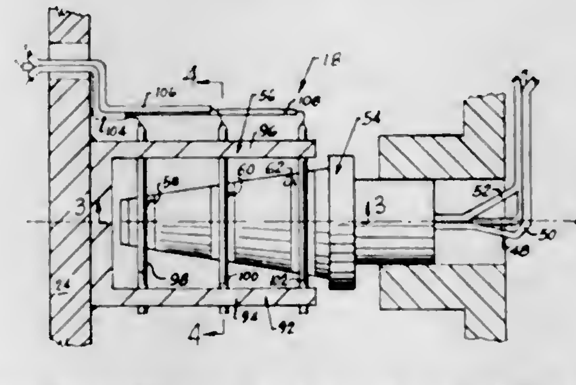

A slip arrangement for a gyroscope having a brush unit and a ring unit, the brush unit being connected to the outer gimbal having a U-shaped support frame with U-shaped wires disposed on opposite sides of rings on a ring unit, the ring unit being fixed to the inner gimbal disposed coaxially with the brush unit having a plurality of rings opposite the brush unit wires for contact thereto, the contact surfaces gradually increasing in diameter providing a substantially frusto-conical profile for ease of assembly with said wires.

3,396,587
GYROSCOPES
John Thomas Gresham, Skillman, N.J., assignor to FMC Corporation, New York, N.Y., a corporation of Delaware
No Drawing. Filed Apr. 1, 1966, Ser. No. 539,301
3 Claims. (Cl. 74—5.5)

1. A control system comprising a control element in operative contact with a high gravity fluid which is an organomercury compound of the following formula:

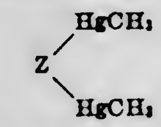

wherein Z designates an alkane hydrocarbon residue selected from the class consisting of lower alkane and cyclopropane.

3,396,588
INFINITELY VARIABLE FRICTION CONE TRANSMISSION
Paul Stober and Wilhelm Stober, Pforzheim, Germany, assignors to Gebruder Stober Maschinenfabrik, Pforzheim, Germany
Filed May 4, 1966, Ser. No. 547,465
Claims priority, application Germany, May 18, 1965, St 23,840
5 Claims. (Cl. 74—190)

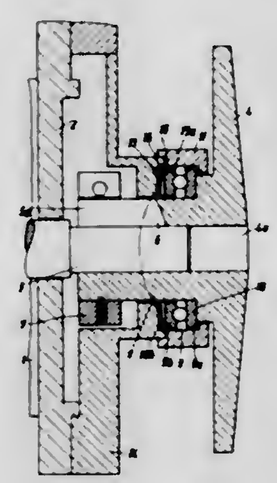

An infinitely variable friction cone transmission in which the friction cone is journalled on a motor shaft and in which a thrust bearing is located between a motor housing flange and the friction cone in the immediate vicinity of the latter, while that race ring of said thrust bearing which is closest to the motor has an end face near the peripheral portion thereof provided with a spherical surface engaging a correspondingly shaped spherical surface at said housing.

3,396,589
FAST-ACTING REVERSIBLE FRICTION DRIVE MECHANISM
Richard M. Davidson, Northbrook, Ill., assignor to Bell & Howell Company, Chicago, Ill., a corporation of Illinois
Filed Oct. 19, 1965, Ser. No. 497,971
9 Claims. (Cl. 74—202)

A drive transmission mechanism for transmitting to a rotationally reversible output shaft a sinusoidally varying torque derived from a unidirectional substantially con-

stant torque motor. The motor continuously rotates a first roller in frictional engagement with a second roller on the drivable output shaft. Relative angular rotation between the axes of the rollers causes torque transmitted from the driven roller to the drivable roller to vary from a maxi-

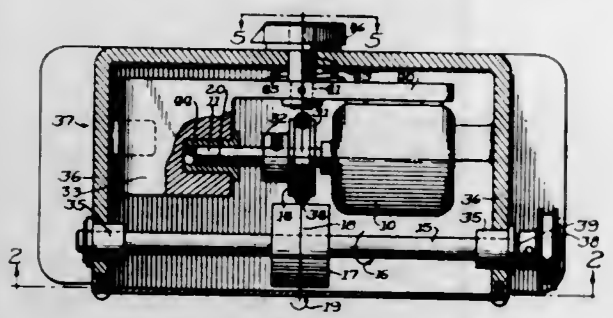

mum, when the supporting shafts for the rollers are parallel, to a minimum when the shafts are essentially perpendicular to one another. To obtain a continuously varying sinusoidal torque curve, the motor driven shaft can be continually rotated by a second drive means.

3,396,590
BELT TRANSMISSION DEVICE
Holcombe M. Verdery, Jr., P.O. Box 157, Harlem, Ga. 30814
Filed Feb. 2, 1966, Ser. No. 524,603
5 Claims. (Cl. 74—220)

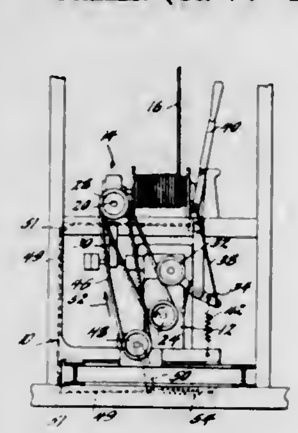

The invention comprises a belt drive transmission for forward and reverse drive including driving and driven members, each having a pair of pulleys, a first extended length forward drive belt trained over pulleys on the members and an idler pulley for tightening the forward drive belt, a second reverse drive belt trained over the driving member and over a second, movable idler pulley, which is movable to press an exterior surface of the reverse belt against a pulley on the driven member, and a manual lever with cable means for selectively moving the idler pulleys into driving position.

3,396,591
INFINITELY VARIABLE MECHANICAL SPEED TRANSMISSION
Georg Schorp, Munich-Pasing, Germany, assignor to Bayerisches Leichtmetallwerk Graf Blucher Von Wahlstatt KG, Munich, Germany
Filed Feb. 18, 1966, Ser. No. 528,634
Claims priority, application Germany, Feb. 19, 1965, B 80,604
1 Claim. (Cl. 74—230.17)

A pulley transmission of infinitely variable speed. The pulley of the transmission is of the cone type and has a pair of cone sections which taper toward each other and which are axially adjustable with respect to each other for adjusting the transmission, as is well known.

At their tapered surfaces which are directed toward each other the sections of the pulley are circumferentially corrugated and are defined at these spaces in their entirety by curved surfaces free of any sharp transition edges and composed in any circumferential section of arcs of circles which are arranged one after the other in reverse directions so that a convex surface portion is followed by a concave surface portion of the pulley which smoothly merges with the convex surface portion. Situated between the tapered corrugated pulley surfaces is a transmission chain having links respectively provided with group of transversely extending lamellae, and because the convex surface portions of one of the cone pulley sections are

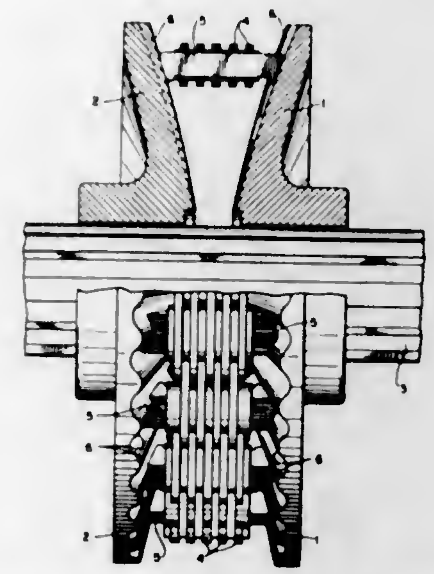

angularly aligned with the concave surface portions of the other cone pulley section, these lamellae will be transversely shifted preventing slippage between the transmission chain and pulley. As a result of the smooth transition between the curved surface portions of the cone pulley sections there are no sharp edges which will become rapidly worn out and there is relatively little if any slippage of the transmission. In addition, the cone pulley sections can be economically manufactured as simple forgings.

3,396,592
DRIVE APPARATUS
Alfred W. French, Piqua, Ohio, assignor to The French Oil Mill Machinery Company, Piqua, Ohio, a corporation of Ohio
Filed Sept. 26, 1966, Ser. No. 582,149
8 Claims. (Cl. 74—325)

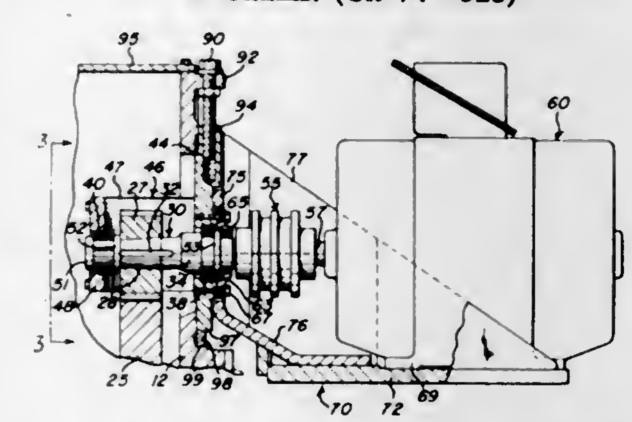

1. An improved drive apparatus for use on a gear reduction unit enclosed within a housing, comprising guide means connected to said housing including a slidably supported and vertically extending slide member, a support bracket connected to said slide member for movement therewith and including a horizontally extending portion, a power supply unit mounted on said horizontal portion of said support bracket and having a horizontally extending output shaft, a stub shaft extending into said housing, bearing means connected to said slide member for rotatably supporting said stub shaft in general alignment with said output shaft, coupling means connecting said stub shaft to said output shaft to provide a positive drive connection therebetween, a drive pinion mounted on said stub shaft and adapted to mesh with a driven gear rotatably mounted within said housing, and means for adjustably positioning said slide member in relation to said housing for disengaging said pinion and said gear to provide for interchanging drive pinions of different sizes according to the desired ratio of rotation between said pinion and said driven gear.

3,396,593
TRANSMISSION AND CLUTCH FOR ROTARY TOOL
Robert G. Moores, Jr., Cockeysville, Md., assignor to The Black and Decker Manufacturing Company, Towson, Md., a corporation of Maryland
Filed Aug. 1, 1966, Ser. No. 569,332
6 Claims. (Cl. 74—371)

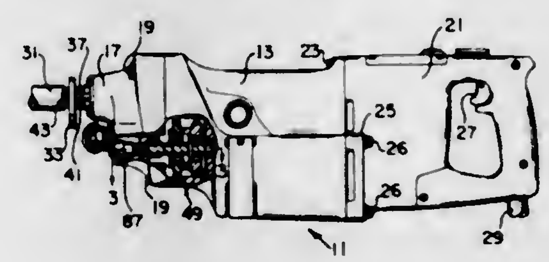

The device disclosed herein is a power operated tool, such as a rotary hammer, which includes a two-speed transmission adapted to interconnect and transmit rotation from a motor to a tool bit. The transmission includes two pairs of interconnected drive and driven gears and manually shiftable means to selectively interconnect one or the other driven gear to an output shaft in turn drivingly connected to the tool bit. The shiftable means is integrated with the output shaft in a manner affording utmost simplicity and compactness and, in addition, does not restrict or restrain free movement of the transmission parts.

3,396,594
ANTI-BACKLASH MEANS FOR GEAR TRAINS
Melvin F. Walker, Deer Park, N.Y., assignor to Designatronics, Inc., Mineola, N.Y.
Filed Feb. 25, 1966, Ser. No. 530,113
10 Claims. (Cl. 74—409)

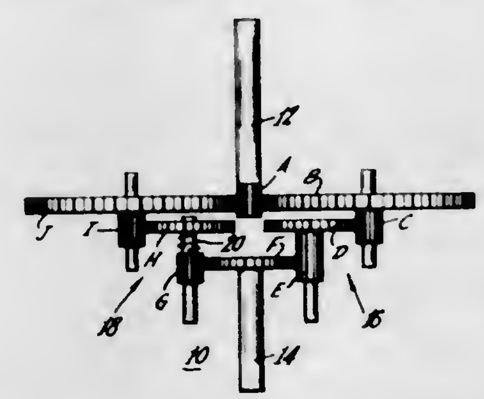

A high ratio precision gear train having a dual gear train, one of which is spring-loaded for elimination of backlash.

3,396,595
WORM AND WORM-WHEEL TRANSMISSIONS
Gustav Niemann, 39 Flemingstrasse, 8 Munich 27, Germany
Filed Aug. 30, 1966, Ser. No. 576,065
Claims priority, application Germany, Aug. 31, 1965, N 27,271
7 Claims. (Cl. 74—425)

A worm and worm-wheel transmission. The transmission includes a rotary worm means and a rotary worm-wheel means coacting therewith, the worm means being made of hardened steel while the worm-wheel means is made of cast iron which initially is provided at its teeth with a relatively thin, scuff-preventing surface layer of a material softer than the material of the worm-wheel means. During running in of the worm and worm-wheel means, the relatively thin scuff-preventing surface layer of material which is softer than the material of the worm-wheel means becomes worn away at the load-transmitting surface portions of the teeth so that at these latter portions the hardened steel coacts directly with the cast iron

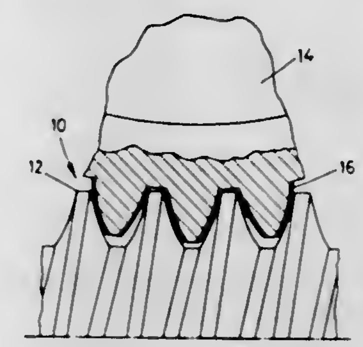

of the worm-wheel means, which, because of this running in, has an exceedingly smooth surface coacting in a highly efficient manner with the worm means. This cast iron worm-wheel means has great resistance to wear and pitting and great strength, far beyond conventional bronze wheels, so that the load transmitting capacity of the transmission of the invention is greater than that of a comparable size where the worm-wheel is made of bronze. Of course, the relatively thin soft coating remains at the non-load carrying portions of the teeth of the worm-wheel.

3,396,596
MOTION-TRANSMITTING DEVICE
Artur Fischer, 133 Grunmettstetterstrasse, 7241 Tumlingen, Kreis Freudenstadt, Germany
Filed Jan. 30, 1967, Ser. No. 612,544
Claims priority, application Germany, Feb. 2, 1966, F 48,343
13 Claims. (Cl. 74—432)

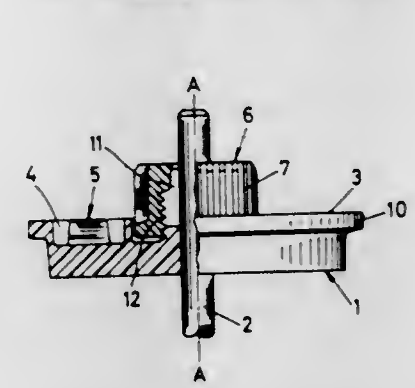

A rotary motion-transmitting device in form of a rotary member of circular outline having an axis of rotation and further having a peripheral face and an axial end face extending transversely of the peripheral face. The axial end face is provided with an annulus of gear teeth which surrounds the axis of rotation inwardly of the peripheral face.

3,396,597
FLIGHT CONTROL LINKAGE FOR AIRCRAFT
James C. Dean, Stratford, Conn., assignor to United Aircraft Corporation, East Hartford, Conn., a corporation of Delaware
Filed Jan. 17, 1966, Ser. No. 521,185
5 Claims. (Cl. 74—469)

Dual fight controls for an aircraft include pairs of push-pull rods having their corresponding ends connected to

lugs on the arms of a bell crank. The bell crank has a median web connecting its arms and the lugs are located

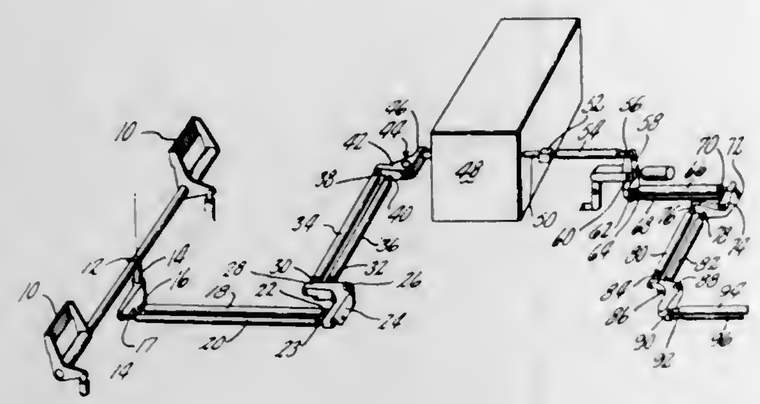

on opposite sides of the web and at different distances from the pivot of the bell crank.

3,396,598
MICROPOSITIONER
George Vincent Grispo, 6a Ormesby Gardens, Greenford, Middlesex, England
Filed Aug. 26, 1964, Ser. No. 392,156
Claims priority, application Great Britain, Sept. 23, 1963, 37,271/63
16 Claims. (Cl. 74—479)

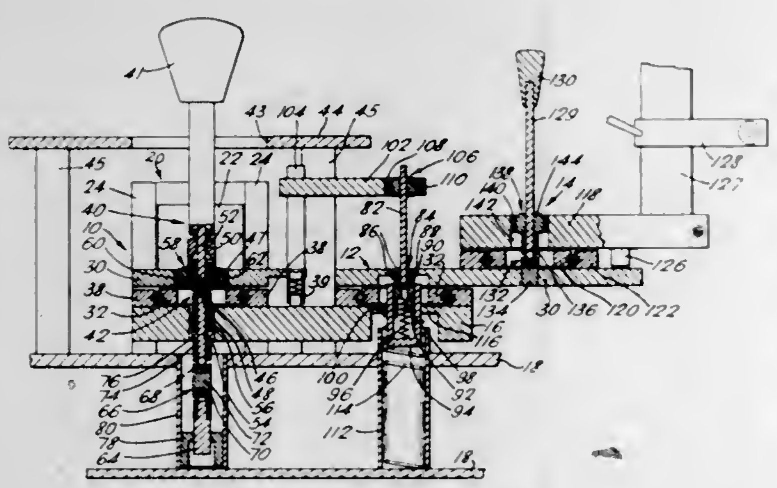

1. A micropositioner including at least two linear slides, each linear slide comprising a base member and a movable member which is arranged to be movable, without rotation, substantially in a single plane relative to the base member, and the base members of the linear slides being fixed relative to each other; a control lever which is arranged to be pivotable about a first pivot point substantially fixed relative to the base member of a first one of the linear slides, a first portion of the control lever being arranged to cooperate with the movable member of the first linear slide in such a manner that movement of a second portion of the control lever more remote from said first pivot point than is said first portion of the control lever brings about related movement on a reduced scale of the movable member of the first linear slide; a second lever which is arranged to be pivotable about a second pivot point substantially fixed relative to the base member of a second one of the linear slides, a first portion of said second lever being arranged to cooperate with the movable member of the second linear slide in such a manner that movement of a second portion of said second lever more remote from said second pivot point than is said first portion of said second lever bring about related movement on a reduced scale of the movable member of the second linear slide; and connecting means for connecting said second portion of said second lever to the movable member of the first linear slide for movement therewith.

3,396,599
STEERING COLUMN FOR VEHICLES
Werner E. Altmann, Stuttgart, Germany, assignor to Daimler-Benz Aktiengesellschaft, Stuttgart-Unterturkheim, Germany
Filed Nov. 18, 1965, Ser. No. 508,468
Claims priority, application Germany, Nov. 26, 1964, D 45,920
21 Claims. (Cl. 74—492)

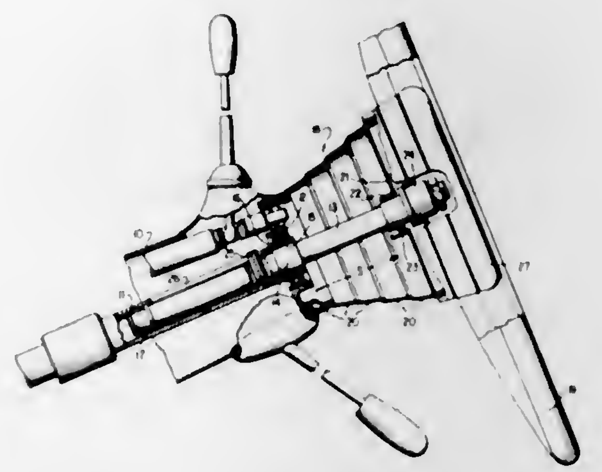

A safety steering column for vehicles, especially motor vehicles, whereby the steering spindle extending in a tubular casing is subdivided into at least two parts that are mutually displaceable in a telescopic manner but are rotatable in unison without play within a predetermined torque range and of which a first part is supported in the casing so as to be rotatable but axially immovable. The two parts are provided with a friction force fit transmitting the steering torque without play and providing resistance during relative axial movement. An interference fit is provided to form the torque driving connection only for steering torques above the permissible torque range. The friction interference fit is such that a constant axial friction will be produced or a variable friction force will be produced that is combined with a collapsible pot axial resistance force to produce a combined uniform force over full axial relative movement.

3,396,600
POWER OPERATED TILT AND TELESCOPE STEERING ASSEMBLY
Philip B. Zeigler and Robert D. Wight, Saginaw, Mich., assignors to General Motors Corporation, Detroit, Mich., a corporation of Delaware
Filed Oct. 11, 1966, Ser. No. 585,811
5 Claims. (Cl. 74—493)

1. In a steering assembly having a fixed lower portion, an intermediate portion telescopeable relative to said lower portion and an upper portion tiltable relative to said intermediate portion, the combination comprising, first power operated means mounted on said lower portion and connected to said intermediate portion for axially moving said intermediate portion to any selected position within a predetermined linear range, second power operated means mounted on said lower portion for tiltably moving said upper portion to any selected position within a predetermined angular range, said second power operated means including slidable drive means operatively connected to said upper portion and

permitting axial displacement of said upper portion with said intermediate portion relative to said lower portion

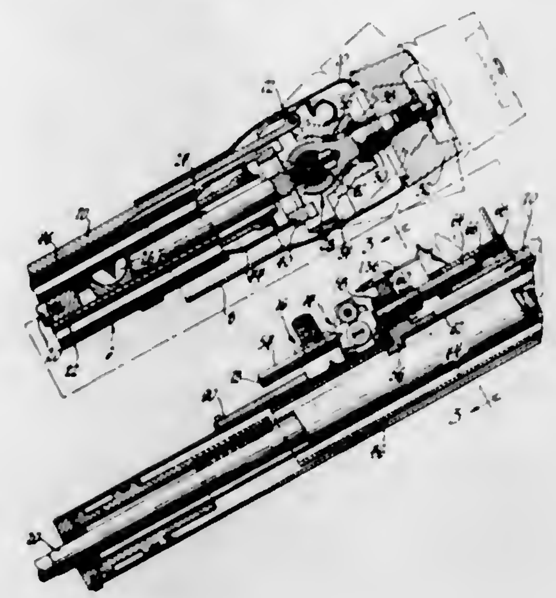

while maintaining the selected angular position relative to said intermediate portion.

3,396,601
EXTENSIBLE ELEMENT
Donald R. Wright, Midland, Mich., assignor to The Dow Chemical Company, Midland, Mich., a corporation of Delaware
Filed Feb. 16, 1966, Ser. No. 527,835
5 Claims. (Cl. 74—501)
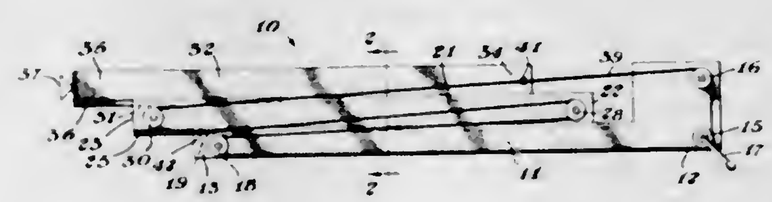
An extensible boom is prepared from three sliding arms, four pulleys and a cable. The arms are positively driven.

3,396,602
ACTUATING MECHANISM FOR PUSH BUTTON SWITCH OPERATING DEVICES
Anthony A. Di Pilla, Philadelphia, Pa., assignor to Robertshaw Controls Company, Richmond, Va., a corporation of Delaware
Filed Dec. 29, 1966, Ser. No. 605,680
20 Claims. (Cl. 74—503)

1. A motion translating assembly including
a first subassembly having a first motion translating abutment,
a second subassembly having a second motion translating abutment,
said first and second subassemblies positioned to assume a motion translating position from a non-motion translating position by initial movement of said first and second subassemblies relative to one another toward and beyond said motion translating position followed by relative motion of said first and second subassemblies in the opposite direction to at least said motion translating position,
means engaging at least one of said first and second subassemblies causing said first and second motion translating abutments to be displaced relative to one another during at least a portion of said initial movement preventing engagement of said abutments and upon said first and second subassemblies being subsequently moved relative to one another in the opposite direction to at least said motion translating position permitting said first and second motion translating abutments to assume a motion translat-

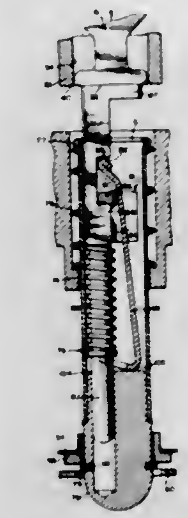

ing position, either one of said first and second subassemblies when then moved toward the other causing said first and second abutments to engage thereby permiting said first and second subassemblies to be operated as a motion translating assembly.

3,396,603
HAND POWER HANDBRAKE
Frank A. Bezlaj, Matteson, and Jerome J. Panko, Harvey, Ill., assignor to Unarco Industries, Inc., a corporation of Illinois
Filed Apr. 15, 1966, Ser. No. 542,909
5 Claims. (Cl. 74—506)

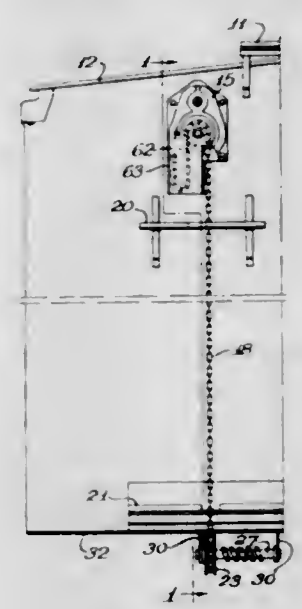

A mechanism for operating a railway brake. An actuating chain is connected to the brake. A chain drum and a first chain sprocket are mounted together for mutual rotation, the chain sprocket having a substantially larger effective diameter than the chain drum. The chain sprocket windably receives the actuating chain. A rotatable hand wheel, a second chain sprocket and means for rotating the second chain sprocket in response to rotation of the hand wheel are also provided. A second chain engages both the first and second chain sprockets so that rotation of the second sprocket rotates both the first sprocket and the drum to apply tension to the brake actuating chain and thereby to the brake.

3,396,604
FAUCET HANDLE ASSEMBLY
Abraham M. Samuels, Chicago, and Eugene B. Shapiro, Highland Park, Ill., assignors to Chicago Specialty Manufacturing Co., a corporation of Illinois
Filed Apr. 25, 1966, Ser. No. 545,130
9 Claims. (Cl. 74—548)

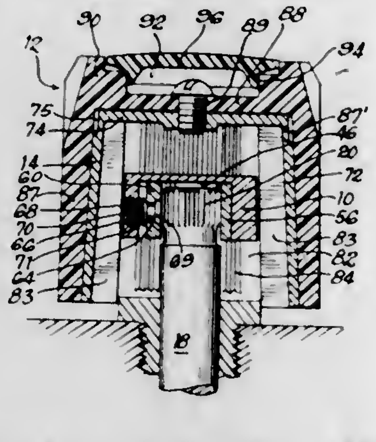

A holder has inner clamp means which attaches the holder to a faucet stem. The holder has outer clamp means which attaches a handle body to the holder.

3,396,605
DRIVE AXLE
William H. Wilkinson, Upper Arlington, Ohio, and John R. Thorson, Phoenix, Ariz., assignors to Mobil Oil Corporation, a corporation of New York
Filed Feb. 3, 1966, Ser. No. 524,710
7 Claims. (Cl. 74—650)

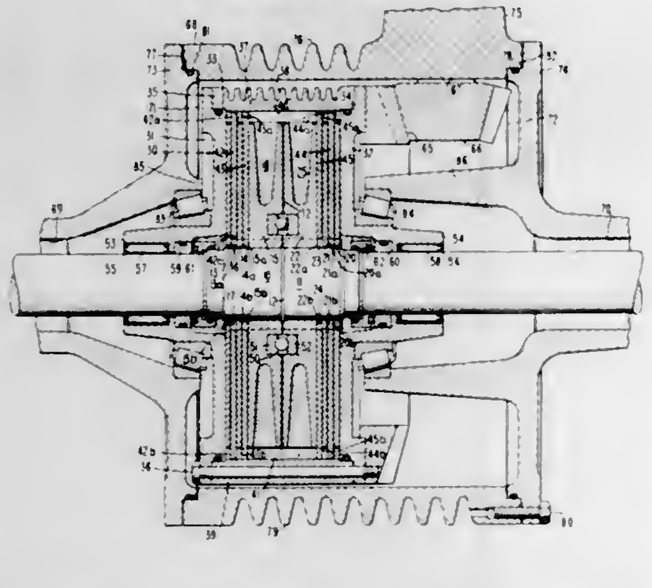

An improved automotive drive axle or rear-wheel drive, is provided, for transmitting power from a propeller shaft to the rear wheels of an automotive vehicle or machine. In the drive axle, a viscoelastic liquid is employed to transmit power, the liquid being confined between one or more pairs of coaxial discs or plates which provides radial power transmitting surfaces.

3,396,606
POWER TRANSMISSION
Robert M. Tuck, Indianapolis, Ind., assignor to General Motors Corporation, Detroit, Mich., a corporation of Delaware
Filed Dec. 28, 1965, Ser. No. 516,996
13 Claims. (Cl. 74—677)

A transmission having a torque converter and a torque splitting planetary gearset driven by an engine to provide hydraulic and mechanical power paths which are combined by a torque combining planetary gearset for producing a split torque drive used for normal vehicle operation. A full converter low range drive is established by deactivating the torque splitting gearset and conditioning the torque combining gearset for torque multiplication so that the converter can drive the transmission output. A lock-up clutch is utilized to connect the torque converter input to the transmission output shaft to provide a direct mechanical drive. This transmission also includes a

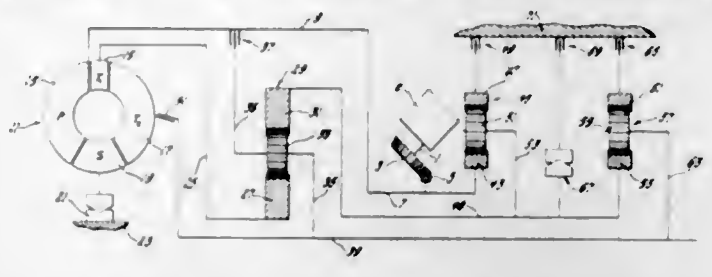

planetary gearset operatively connected to the converter and the transmission output for producing a reverse drive ratio.

3,396,607
HYDROSTATIC TRANSMISSION
William A. Ross, Rockford, Ill., assignor to Sundstrand Corporation, a corporation of Delaware
Filed Feb. 21, 1966, Ser. No. 529,007
6 Claims. (Cl. 74—687)

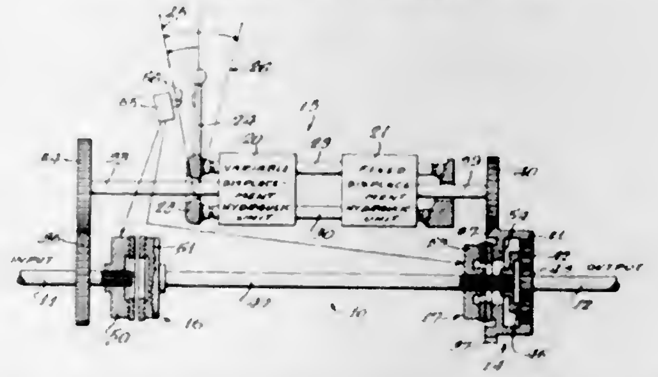

A hydrostatic transmission including a hydraulic drive and differential gearing consisting of intermeshing control, first and second gears with the control gear drivingly connected to the hydraulic drive, the first gear selectively connectible to the transmission input shaft, and the second gear continuously driving the transmission output shaft, and a control effecting a transmission of all power hydraulically in a low speed range by engaging a first clutch which locks the differential gears together for rotation as a unit, the control effecting a split transmission of power in an upper speed range by engaging a second clutch which drivingly connects the input shaft to the first gear and disengaging the first clutch when the first gear rotates at substantially the same speed as the input shaft.

3,396,608
DRIVE CONNECTION
Ernst Schumacher, Mulheim, Speldorf (Ruhr), Germany, assignor to Daimler-Benz Aktiengesellschaft, Stuttgart-Unterturkheim, Germany
Filed May 21, 1965, Ser. No. 457,690
12 Claims. (Cl. 74—688)

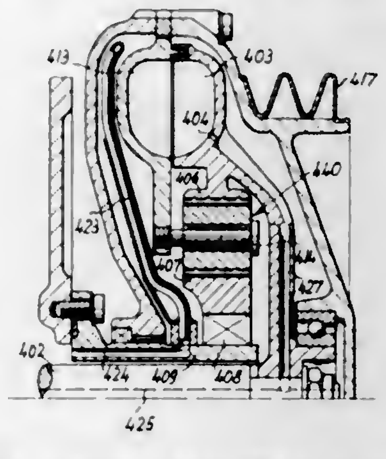

A drive for auxiliary aggregates or units, especially in internal combustion engines for vehicles, having a coupling between the driving engine and the auxiliary drive

driving the auxiliary aggregates, which coupling adjusts itself automatically to an increasing slippage with an increasing engine rotational speed. Preferably, the coupling is a hydrodynamic coupling effective only over a low range of engine speed and connected in parallel with a speed reduction unit effective at engine speeds above the range, with means for switching automatically from one to the other.

3,396,609
POSITIVE DRIVE TRACTION DIFFERENTIAL WITH INERTIA DISC
Thomas R. Stockton, Ann Arbor, Mich., assignor to Ford Motor Company, Dearborn, Mich., a corporation of Delaware
Filed Apr. 27, 1967, Ser. No. 634,210
6 Claims. (Cl. 74—711)

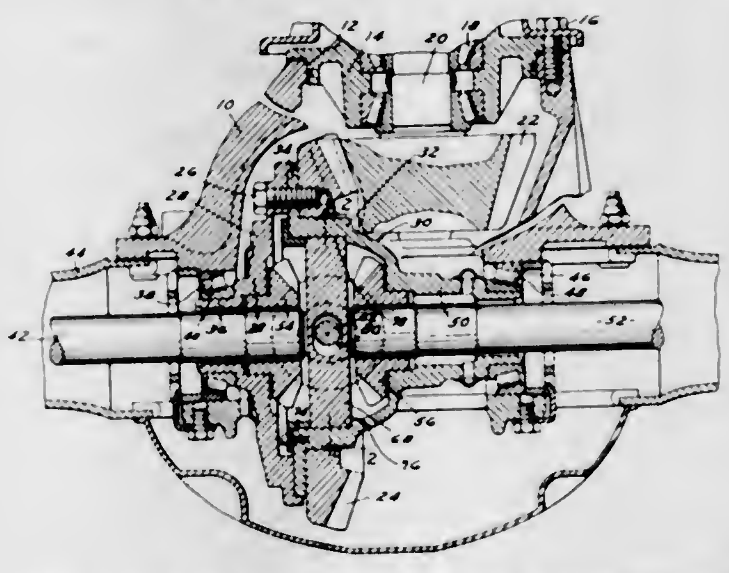

This specification discloses a geared torque transmitting differential for use in an automotive vehicle driveline. It includes an inertia disc that is drivably connected to differential pinion gears when differential motion occurs between the pinion and the differential carrier. This establishes a torque bias in the driveline that tends to equalize torque distribution to each axle shaft regardless of variations in the effective coefficient of friction for one traction wheel with respect to the corresponding coefficient for the other.

3,396,610
TRANSMISSION MECHANISM
William M. Rich, Jr., and George E. Flinn, Muncie, Ind., assignors to Borg-Warner Corporation, Chicago, Ill., a corporation of Illinois
Filed Mar. 24, 1966, Ser. No. 537,220
10 Claims. (Cl. 74—740)

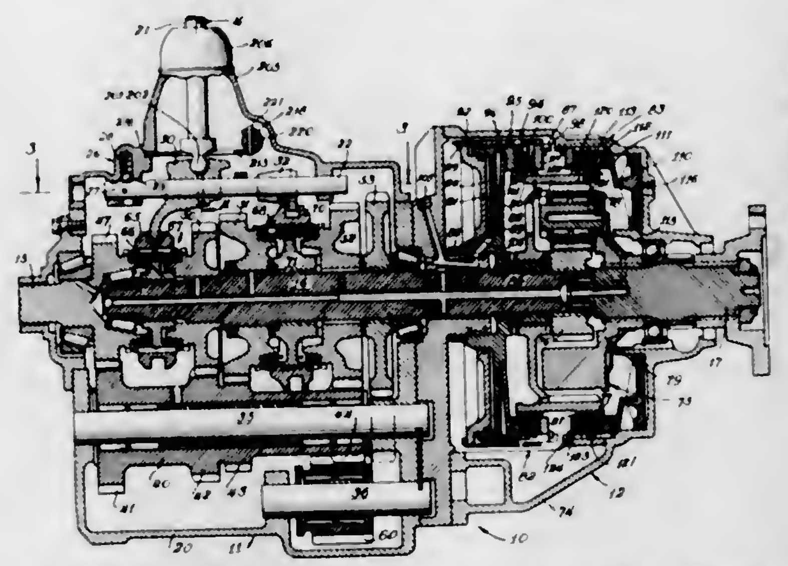

A transmission comprising a 4-speed manually shifted transmission in combination with a 2-speed planetary gear set providing 8 forward drive ratios, the planetary gear set being adapted to be shifted by air or other fluid pressure and the transmission having a single control lever to select any of the 8 forward drive ratios with no additional buttons or levers required.

3,396,611
LUBRICATING SYSTEM FOR A GENEVA MOTION APPARATUS
Floyd E. Smith, 5704 Brewster Lane, Erie, Pa. 16505
Filed Jan. 13, 1966, Ser. No. 520,441
5 Claims. (Cl. 74—820)

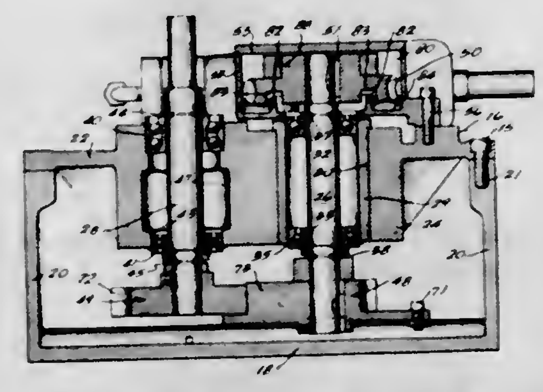

A lubricating system which provides a positive and continuous circulation of oil to the driving and driven members of a motion converting apparatus.

3,396,612
ADJUSTABLE RECIPROCATORY MECHANISM
Benjamin J. Lazan, Carmel, Calif., assignor to B. J. Lazan, Jeannette W. Lazan, and First National Bank of Minneapolis, as trustees under trust agreement dated Oct. 7, 1965
Filed June 13, 1966, Ser. No. 557,066
14 Claims. (Cl. 74—837)

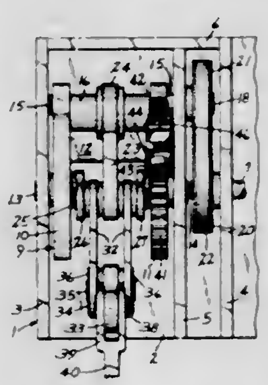

A device for converting rotary to reciprocatory movement, involving a crank journalled in support means and a cooperating pitman, and a drive member connected at one end to the pitman and having its other end guided for movements in a predetermined direction by guide means on the support means. The support means is rotatable on the axis of rotation of the crank in directions to vary the extent of reciprocatory movement imparted to the drive member by the pitman.

3,396,613
JIG FOR USE WITH A MACHINE TOOL
Billy Hutton, 1594 Paloma, Pasadena, Calif. 91104
Filed Feb. 25, 1966, Ser. No. 529,996
1 Claim. (Cl. 77—55)

The jig has a first and a second end rigidly connected through a tapered beam. The beam converges from the first end to the second end. The first end has a mortise for attaching the jig to the tenon of a machine tool such that

the second end depends downwardly and outwardly from the first end. The second end has a demountable flange in

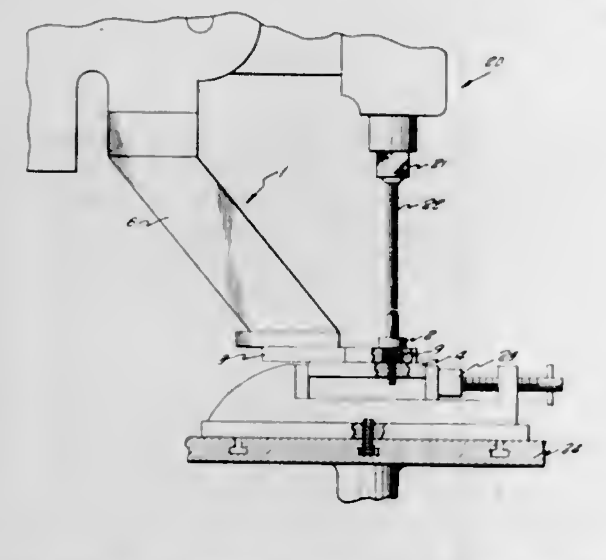

which is mounted a drill bushing for guiding the cutting tool of the machine tool.

3,396,614
SLIDING SIDE JAW WRENCH HAVING A PIVOTED RACK CATCH
William C. Gore, Streamwood, and Eugene B. Shapiro, Highland Park, Ill., assignors to Chicago Specialty Manufacturing Co., Skokie, Ill., a corporation of Illinois
Filed Apr. 11, 1967, Ser. No. 630,093
3 Claims. (Cl. 81—136)

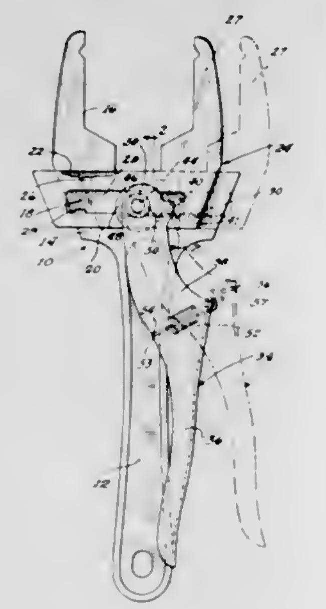

This invention relates to improvements in a wrench, and more particularly to a slip and lock nut wrench for tightening and/or loosening large size nuts, which includes a manually slidable jaw member held in its adjusted slidable position by a pivoted lever normally urged to locking position but which lever is manually pivoted to a retracted position to release its locking position relative to the slidable jaw member.

3,396,615
RIBBON GUIDE TAKE-UP FOR SPLITTING MACHINERY
Robert P. Miller, Akron, and Richard M. Kuts, Cuyahoga Falls, Ohio, assignors to The Falls Engineering & Machine Co., Cuyahoga Falls, Ohio, a corporation of Ohio
Filed Jan. 21, 1966, Ser. No. 522,324
5 Claims. (Cl. 83—4)

A ribbon guide take-up for splitting machinery utilizing an eccentrically pivotal wedge-type clamping mechanism which pivots eccentrically while take-up of the ribbon guide is accomplished to clamp and fold the ends

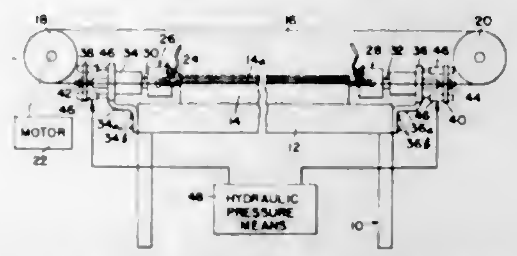

of the ribbon guide with an increasing pressure as the tension on the ribbon guide is increased.

3,396,616
METHOD AND APPARATUS FOR PERFORATING THERMOPLASTIC FOAMS
Donald R. Wright, Midland, Mich., assignor to The Dow Chemical Company, Midland, Mich., a corporation of Delaware
Filed May 16, 1966, Ser. No. 550,467
8 Claims. (Cl. 83—16)

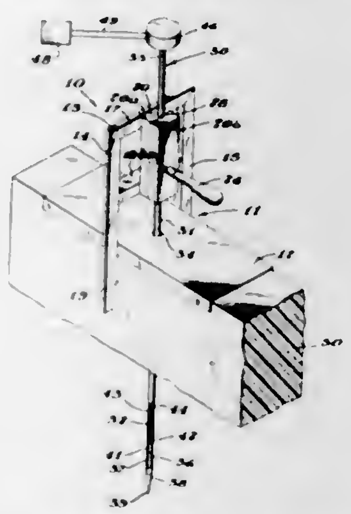

An electrically heated lance slidably held in a guide is employed to perforate foam plastics. Relatively long holes are readily formed.

3,396,617
ROTARY SHEAR FOR CROPPING AND SUBDIVIDING MOVING ROLLED MATERIAL
Ewald Hein, Kreuztal, and Walter Kramer, Dahlbruch, Germany, assignors to Siegener Maschinenbau G.m.b.H., a corporation of Germany
Filed June 1, 1966, Ser. No. 554,604
Claims priority, application Germany, June 4, 1965, S 97,478
5 Claims. (Cl. 83—310)

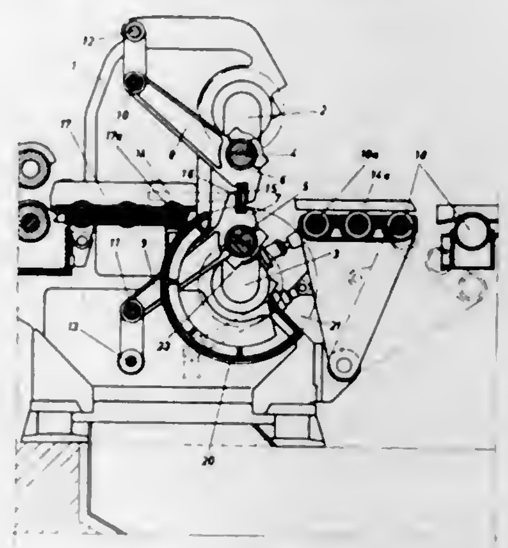

A rotary shear for cropping and subdividing moving rolled stock is disclosed. Counter rotating knives are

arranged on knife holders having one end mounted on the crank pins of driving crankshafts and their other end mounted on the crank pin of a parallel guide crankshaft, synchronized with the driving crankshafts. By this arrangement the approach roller table and the delivery roller table come close to the circular path of the bottom knife.

3,396,618
COLD SAW
Alfred Leyer, Dusseldorf, Germany, assignor, by mesne assignments, to W. R. Grace & Co., New York, N.Y., a corporation of Connecticut
Filed May 31, 1966, Ser. No. 553,807
Claims priority, application Germany, May 31, 1965 B 82,180
12 Claims. (Cl. 83—470)

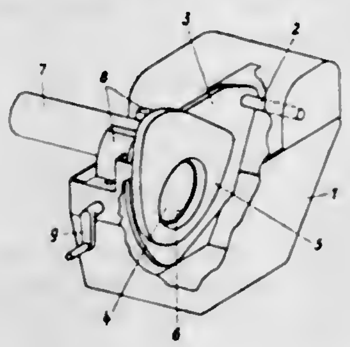

In a cold saw having an annular blade with cutting teeth on the inner periphery and a toothed outer periphery, supported and driven by a plurality of drive and guide gears in engagement with the toothed outer periphery, the invention prolongs the life of these drive and guide gears by providing (a) gears substantially wider than the outer periphery of the annular blade and (b) low friction abutment means for positioning the blade laterally relative to the gears so that the blade can be moved into various lateral positions relative to the gears. Preferably, there are two idling gears and one drive gear located at 120° apart with the drive gear engaging the lowest point of the outer periphery of the blade.

3,396,619
FLUID AMPLIFIER EMPLOYING BOUNDARY LAYER EFFECT
Romald E. Bowles, 12712 Meadowood Drive, Silver Spring, Md. 20904, and Raymond W. Warren, 7925 Falstaff Road, McLean, Va. 22101
Continuation-in-part of applications Ser. No. 855,478, Nov. 25, 1959, and Ser. No. 4,830, Jan. 26, 1960. This application Oct. 19, 1960, Ser. No. 58,188
166 Claims. (Cl. 83—639)

140. The combination according to claim **135** wherein said means for issuing a stream of fluid comprises a power nozzle.

3,396,620
SUPPORT FOR A STEEL RULE DIE MEMBER AND METHOD OF PRODUCING THE SAME
Julian J. Raphael, 158 Midgely Drive, Hewlett, N.Y. 11557, and Elliott Shulman, 117—31 220th St., Cambria Heights, N.Y. 11411
Filed Sept. 15, 1966, Ser. No. 579,714
21 Claims. (Cl. 83—686)

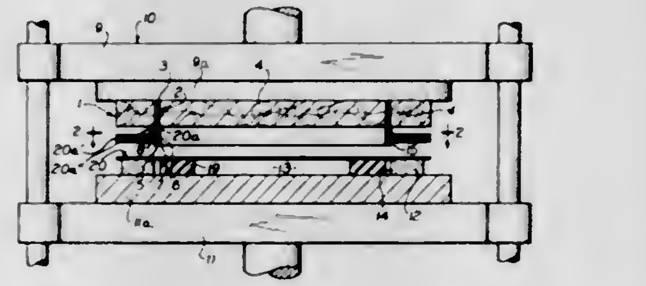

1. In a cutting die including a cutting die member having a cutting rule and engaged within a kerf in a die board, said cutting die perpendicularly projecting from said die board to a cutting end, said cutting rule including an inner surface and an outer surface, said inner surface of said cutting rule having a substantially uniform cross-section complementary to the dimensions and configuration of the part to be manufactured, said outer surface of said cutting rule having a cross-section of substantially uniform configuration, said outer surface defining an outer cutting edge adjacent said cutting end of the rule; a support for the cutting rule comprising:

a high tensile strength member having a cross-section larger than said cross-section of substantially uniform configuration of said outer surface of said cutting rule,

said high tensile strength member including an inner edge defining an opening precisely complementary in configuration and dimension to said cross-section of substantially uniform configuration of said outer surface of said cutting rule, said inner edge being disposed about said outer surface of said cutting rule, thereby engaging said outer surface in precise continuous abutment, and

said high tensile strength member disposed about said outer surface of said cutting rule thereby supporting said cutting rule.

9. A method of forming a support for a cutting rule mounted in a kerf of a die board of a cutting die member and having an outer surface of said cutting rule defining at its free end an outer cutting edge, comprising the steps of

mounting said cutting die member in a die press,

forming a blanking die member having a blanking member inner edge defining a blanking member opening complementary in configuration and dimension to the cross-section of said outer cutting edge of said cutting rule,

mounting said blanking die member in said die press with said blanking member opening in cooperative alignment with said outer cutting edge of said cutting rule,

placing a layer of material larger than said cross-section of said outer cutting edge of said cutting rule adjacent said blanking die member covering said blanking member opening, and

closing said die press so that said outer cutting edge of said cutting rule and said blanking member inner edge shear said layer of material to form a first sheared support member and force said first sheared support member about said outer surface of said cutting rule to a predetermined position relative said cutting end of said cutting rule.

3,396,621
INTERCHANGEABLE NECK ASSEMBLIES FOR ELECTRICAL MUSICAL INSTRUMENTS
Billy G. Dycus, 232 Brookfield Road, Avon Lake, Ohio 44012
Filed Oct. 8, 1965, Ser. No. 494,079
4 Claims. (Cl. 84—293)

Interchangeable neck assemblies for electrical musical instruments in which a quick disconnect and interchangeable neck assembly that is pre-tuned and capable of being attached and integrated into electric amplifier circuits is constructed for selected musical instruments.

3,396,622
STRINGED INSTRUMENT CONSTRUCTION
Norman M. Johnston, 1305 McPherson Blvd., Fremont, Ohio 43420
Filed Mar. 24, 1967, Ser. No. 625,791
10 Claims. (Cl. 84—318)

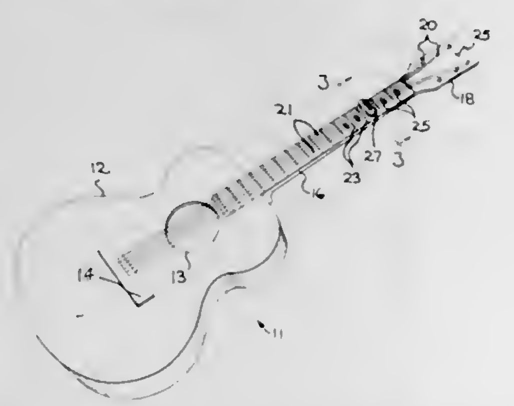

A modified construction for stringed instruments, such as a guitar, featuring insets between the fret bars containing an aperture having a recessed spring or clamp element adapted to releaseably engage a downwardly projecting stud secured to a linear bar having a cushion strip on its underside for depressing the strings of the instrument laterally across the fingerboard.

3,396,623
ELECTRICALLY FIRED EXPLOSIVE FASTENERS
Frank Marsden Willis, Sewell, N.J., assignor to E. I. du Pont de Nemours and Company, Wilmington, Del., a corporation of Delaware
Filed Sept. 29, 1967, Ser. No. 671,773
5 Claims. (Cl. 85—65)

Electrically fired, explosively actuated fasteners such as rivets, which have an electrode extending substantially axially through the head portion of the fastener body, are provided with an annular, substantially coaxial groove

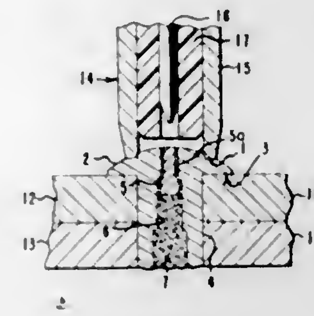

in the face of the head portion to facilitate alignment of the fastener-firing device.

3,396,624
DEVICE FOR ATTACHING OBJECTS TO A BASE OR FOUNDATION OF LOW MECHANICAL STRENGTH
Henning E. Eriksson and Folke A. Eriksson, both of Hemmingsmark, Kalix, Sweden
Filed Dec. 27, 1966, Ser. No. 604,829
1 Claim. (Cl. 85—66)

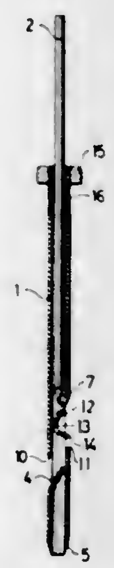

A device for attaching objects to a base or foundation of low mechanical strength, such as foam concrete, which consists of a tube to be driven vertically into the concrete and a nail to be driven into the tube, the tube having an opening with a bent flange which deflects the end of the nail sidewise into the concrete; preferably the tube also has another opening located above the first-mentioned opening on the opposite side of the tube and provided with a flange which is bent in the opposite direction from the first-mentioned flange and which has an end pressed by the nail into the concrete, whereby the end of the nail is guided toward the first-mentioned flange.

3,396,625
BOBBIN CARRIER FOR BRAIDING MACHINES AND THE LIKE
Clarence F. Faulkner, Athens, Ga., assignor to Puritan Cordage Mills, Louisville, Ky., a corporation of Kentucky
Filed Nov. 13, 1967, Ser. No. 682,312
6 Claims. (Cl. 87—22)

A bobbin carrier having a gear train driven by the bobbin as it dispenses a strand, one of the gears having a notch extending across its teeth and adapted to be occupied by a gear-locking means when tension in the strand drops to a predetermined value, the gear-locking

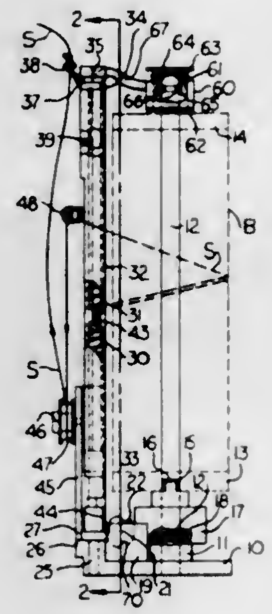

means being disengaged from the notch when tension in the strand rises to a predetermined second value.

3,396,626
AUTOMATIC RANGE FINDER
Bill B. Hughes, Bloomington, Minn., assignor to Electronic Communications, Inc., St. Petersburg, Fla., a corporation of Delaware
Filed Sept. 27, 1963, Ser. No. 312,181
13 Claims. (Cl. 88—1)

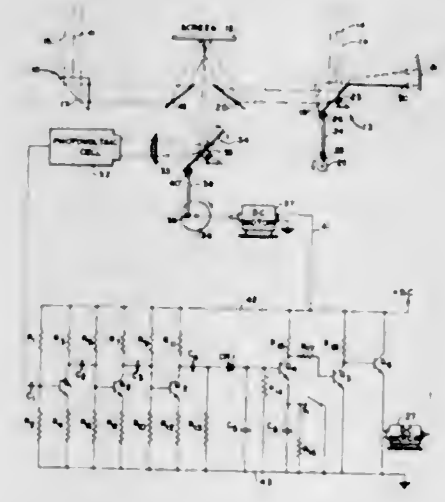

An optical image coincident range finder device with means for automatically determining image coincidence. Range is calculated from the angle between the axes of two optical assemblies which project their images upon a common screen. When the object sighted upon is located at the intersection of the axes, the images upon the screen will be coincident. Photoelectric means are used to determine image coincidence by measuring radiation intensity variations across the screen. This is accomplished by an oscillating mirror and lens system which presents to said photoelectric means successive increments of the radiation from the screen resulting from the images superimposed thereon. Coincidence is present when said radiation variations are a maximum. Power means sweep the axis of one optical system along the axis of the other until the axes intersect at the object ranged upon. At this point, coincidence occurs and switch means stop the sweep. The range is then read from suitable means linked to said swept axis.

3,396,627
METHOD AND DEVICE FOR MEASURING SURFACE ROUGHNESS
Auguste Louis Marie Antoine Rouy, Scarsdale, and Alex J. Weinstein, Croton-on-Hudson, N.Y., assignors to The Ednalite Corporation, Peekskill, N.Y., a corporation of New York
Filed Apr. 9, 1965, Ser. No. 446,809
10 Claims. (Cl. 88—14)

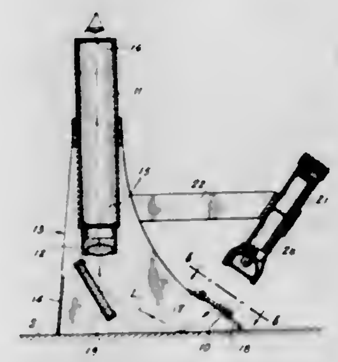

5. A device for measuring the roughness of a surface comprising a plurality of groups of differently spaced lines of different thicknesses provided on at least one planar target member, support means adapted to hold said at least one target member adjacent the surface to be measured in a plane at an acute angle relative to the surface, and sighting means mounted on said support means and establishing a fixed line of sight of an image of a selected one of said groups of lines formed by reflection thereof onto the surface to be measured at an angle of incidence greater than 45°.

3,396,628
WEAPONRY FIRING DEVICES
John J. Nash, Ferguson, Mo., assignor to Alsco, Inc., St. Louis, Mo., a corporation of Delaware
Filed July 6, 1965, Ser. No. 469,406
23 Claims. (Cl. 89—1.814)

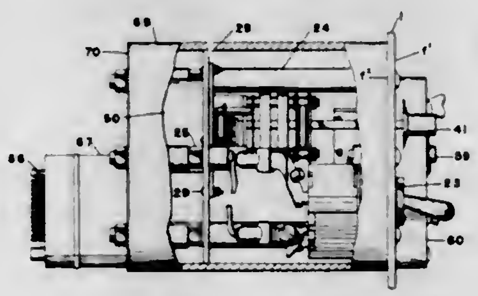

A rocket launcher firing device including an intervalometer contained within a cylindrical housing sized for insertion into one of the launcher tubes of either a 7 or 19 tube rocket launcher. The intervalometer has two contact decks suitable for firing 6 and 18 rockets respectively, and further includes a switch for isolating the former deck from the source of electrical energy. The switch is activated by a pivotally mounted adapter plate which carries a plug-like connector element adapted for insertion into a receptacle in either one of the launchers. The disposition of the receptacle in the 7 tube launcher is such that the adapted plate will be shifted to a position where it holds the switch closed, while in the 19 tube launcher the switch will be open. The intervalometer has a load position wherein no rocket will fire when the firing switch is closed and an arm position wherein the first rocket will fire when the firing switch is closed. The launcher will fire the rockets in individual bursts or sequential bursts.

3,396,629
LAUNCHING POSTS AND THE REMOTE CONTROL OF MISSILES
Jacques Faisandier, 32 Blvd. Felix Faure, Chatillon-sous-Bagneux, France
Filed Mar. 31, 1966, Ser. No. 539,081
Claims priority, application France, Apr. 6, 1965, 12,608
6 Claims. (Cl. 89—1.815)

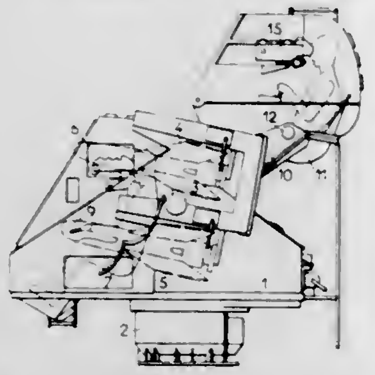

An apparatus for launching missiles having an aiming device and a teleguiding device mounted on a missile launching platform wherein the aiming device maintains the line of sight of the teleguidance device in the direction of the target. The mounting of the teleguidance and aiming devices is such that the gunners mounting the respective devices are superposed in space.

3,396,630
STABILIZER
Helmut Hinterthür, Hamburg-Blankenese, and Wolfgang Pestel, Hamburg, Germany, assignors to Licentia Patent-Verwaltungs-G.m.b.H., Frankfurt am Main, Germany
Filed May 25, 1966, Ser. No. 561,304
(Filed under Rule 47(a) and 35 U.S.C. 116)
6 Claims. (Cl. 89—41)

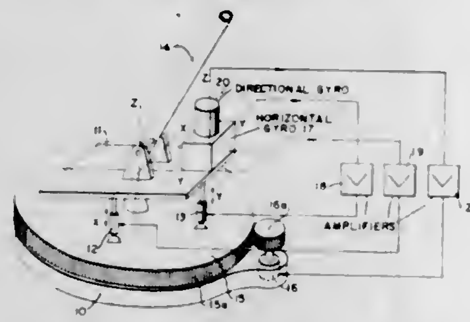

A stabilizing system wherein arrestable first positioning means are interposed between a base and a main platform and arrestable second positioning means are interposed between the main platform and an auxiliary platform, the latter carrying a gyro which is selectively connectable to either of the two positioning means. Thus, when the first positioning means are arrested and the gyro is connected to the second positioning means, there is obtained a system for stabilizing the auxiliary platform with respect to the main platform, and, conversely, when the second positioning means are arrested and the gyro is connected to the first positioning means, there is obtained a system for stabilizing the main platform with respect to the base.

3,396,631
FLUID-DRIVEN ENGINE WITH IMPROVED FLUID AMPLIFIER VALVE MEANS
Kenneth E. Woodward, McLean, Va., assignor to the United States of America as represented by the Secretary of the Army
Filed Jan. 13, 1967, Ser. No. 609,729
12 Claims. (Cl. 91—3)

The present invention relates to a fluid operated engine and, more particularly, to a fluid ssytem embodying improved fluid amplifier valving means in lieu of the customary intake and exhaust valves and their associated timing mechanisms, for oscillating a piston within a cylinder and from which piston power can be obtained. The movement of said piston generates appropriate fluid pulses to synchronize properly the associated fluid amplifier. The input to the fluid amplifier determines both the rate of oscillation of the piston and the output of the

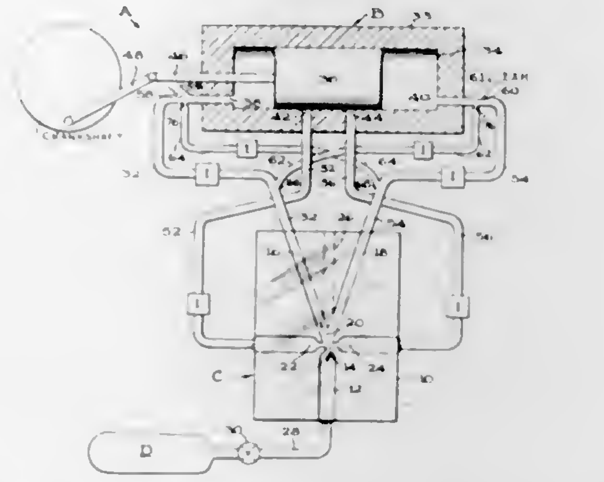

system. The simplicity of the engine system is hereby considerably improved over existing piston engines by the utilization of a fluid amplifier in conjunction with and to achieve my improved fluid exhausting means.

The invention described herein may be manufactured and used by or for the Government of the United States for governmental purposes without the payment to me of any royalty thereon.

3,396,632
VOLUMETRIC MACHINE SUITABLE FOR OPERATION AS PUMP, ENGINE, OR MOTOR PUMP
Michel Leblanc, 55 Rue des Hautes Bievres, Antony, Hauts-de-Seine, France
Filed Apr. 19, 1966, Ser. No. 543,591
9 Claims. (Cl. 91—60)

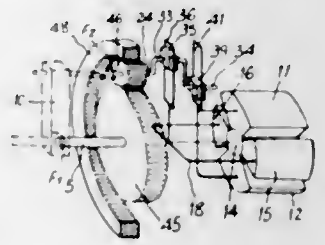

A rotary volumetric machine is comprised of a housing forming a cylindrically shaped chamber in which a pair of oppositely disposed angularly spaced sector-shaped first pistons are disposed in alternating arrangement with a pair of oppositely disposed angularly spaced sector-shaped second pistons. The combined angle formed by the four sector-shaped pistons is less than 360° whereby chambers are provided between the oppositely disposed surfaces of adjacent first and second pistons. The first pistons are secured to a core or sleeve rotatably mounted on a shaft within the chamber while the second pistons extend between a pair of plate-like members disposed transversely of and rotatable about the shaft. A pair of eccentrically arranged crank shafts are disposed within the chamber on diametrically opposed sides of its axis and the crank pins of the shafts are interconnected to the pair of first pistons and the pair of second pistons for rotating them about the shaft at relatively periodically variable speeds whereby the adjacent radially extending surfaces of the sector-shaped pistons are moved away from and toward each other forming therebetween piston chambers of periodically variable volume. Extending into the opposite end of the chamber from the shaft is another shaft having a planet gear thereon which meshes with planet pinions mounted on the crank shafts. In addition, the planet pinions engage internal teeth on a gear rim within the inner surface of the housing. A plurality of ports are provided in the housing to afford inlet and exhaust for the chambers formed between the pistons.

3,396,633
HYDRAULIC VARIABLE TORQUE MOTOR
Clemens Ryzner, Sprockhovel, Germany, assignor to Paul Pleiger Maschinenfabrik, Hammerthal, Germany
Filed Jan. 23, 1967, Ser. No. 611,121
Claims priority, application Germany, Jan. 26, 1966, 38,625
10 Claims. (Cl. 91—202)

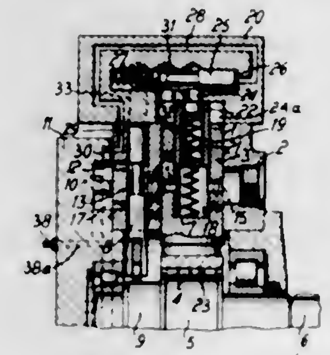

The area of the pressure surfaces of the pistons of the hydraulic motor propelling a vehicle, is changed for providing a greater torque for the vehicle on rough grounds than on roads.

3,396,634
FLUID PRESSURE OPERATED LINEAR MOTOR
Philip Butterworth, Bramhall, England, assignor to Butterworth Hydraulic Developments Limited, Manchester, England
Continuation-in-part of application Ser. No. 530,640, Feb. 28, 1966. This application Sept. 29, 1967, Ser. No. 671,680
Claims priority, application Great Britain, Mar. 9, 1965, 9,858/65
14 Claims. (Cl. 91—224)

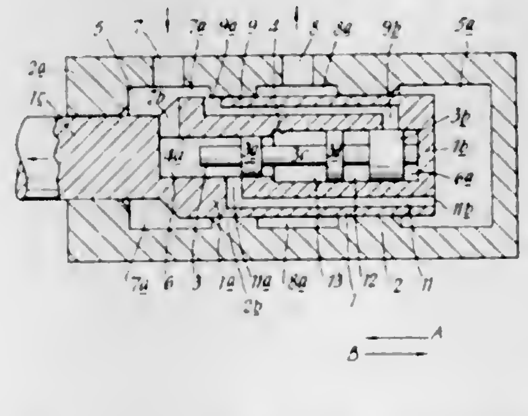

A fluid-pressure operated linear reciprocating motor having in combination a biased piston and biased spool mutually controlling reversal of each other, in which hydraulic lock is prevented by the provision of two spool signalling passages both controlled by the piston. Each spool signalling passage alternately admits pressure to, and releases exhaust from the chamber at the end of the spool cylinder which acts in opposition to the bias. The two passages operate alternately with each other, so that there is no position in which applied pressure or resumption of applied pressure cannot effectively act to move the motor.

3,396,635
CUSHION STOP FOR HYDRAULIC ACTUATORS
Marvin C. Darling, Burrton, Kans., assignor to The Cessna Aircraft Company, Wichita, Kans., a corporation of Kansas
Filed Nov. 30, 1966, Ser. No. 598,040
9 Claims. (Cl. 91—396)

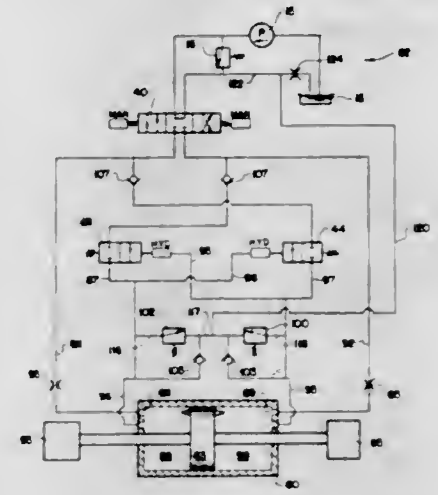

The invention is an improved cushioning stop control for hydraulic motors moving large inertia loads. Upon approaching the end of the stroke the fluid being discharged from the exhaust chamber of the motor is progressively restricted, causing an increased discharge pressure which actuates a by-pass valve to divert fluid pressure from the inlet chamber of the motor to a reservoir, thereby decreasing the overall amount of energy necessary to bring the system to a rest.

3,396,636
COMPRESSED AIR-OPERATED DRIVE-IN APPARATUS TO DRIVE-IN FASTENERS, FOR INSTANCE, NAILS, STAPLES OR THE LIKE
Heinz Emil Bade, Hamburg-Garstedt, Germany (% Joh. Friedrich Behrens, Bogenstrasse 43/45, Ahrensburg, Holstein, Germany)
Filed May 2, 1967, Ser. No. 635,500
Claims priority, application Germany, Jan. 28, 1967, B 90,931
11 Claims. (Cl. 91—399)

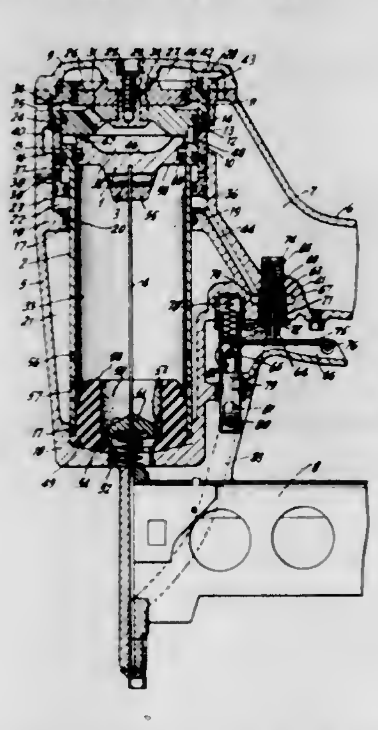

A compressed air-operated drive-in device for fasteners comprising a cylinder, a piston in the cylinder, a buffer ring at the bottom of the ring having a central opening open to atmosphere, with a check valve for said opening, kept open by a spring, with a reservoir surrounding said cylinder, with compressed air means to move the piston

down to seal against the buffer ring, and the cylinder having openings communicating with the reservoir above said piston to allow compressed air to enter the reservoir, and with openings communicating with said reservoir below the piston to allow compressed air from the reservoir to enter the cylinder below the piston and surrounding the seal, to raise the piston in the cylinder and close the check valve and allow the piston to move upwardly in the cylinder.

3,396,637
HYDRAULIC RAM
Donald W. Sessody, Milwaukee, Wis., assignor to Applied Power Industries, Inc., West Allis, Wis., a corporation of Wisconsin
Filed May 11, 1966, Ser. No. 549,318
2 Claims. (Cl. 92—240)

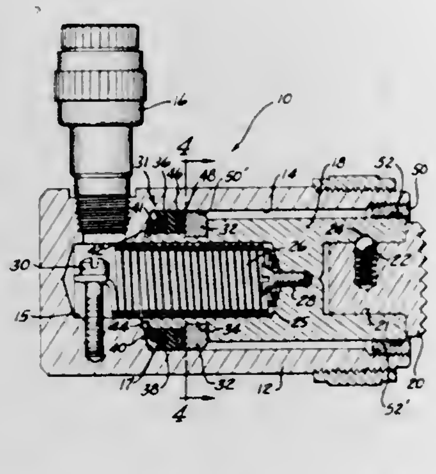

A hydraulic ram device having a piston assembly which includes a piston rod provided with a reduced end portion and an annular groove, the groove receiving a split ring which provides a bearing for an annular seal embracing the reduced end portion of the rod.

3,396,638
PROCESS AND APPARATUS FOR THE MANUFACTURE OF MULTI-PLY BAGS
John G. Lepisto, Middletown, Ohio, assignor to Albemarle Paper Company, Richmond, Va., a corporation of Virginia
Filed Sept. 28, 1966, Ser. No. 582,690
10 Claims. (Cl. 93—20)

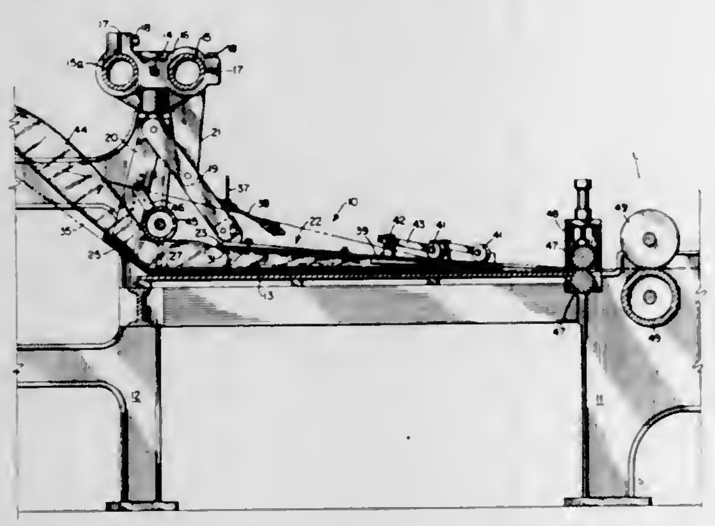

6. In an apparatus for forming gusseted multi-ply bags, the combination comprising:

(a) spaced apart means for pressing together opposed wall portions of a preformed tube of plastic material to provide an inflated section of said tube;

(b) mandrel means for shaping one or more paper webs and said preformed tube of plastic material into a length of gusseted multi-ply bag stock,

(i) said mandrel means including a pair of upper blades and a pair of lower blades, said pairs of blades being spaced apart to receive said inflated section of said plastic tube and being adjustably mounted on support means for said blades whereby the position of each blade may be changed to permit production of gusseted bags having different widths;

(c) means for infolding said one or more paper webs about said blades of said mandrel means to form a paper tube enveloping said preformed tube of plastic material;

(d) gusset forming means extending into the space between each of said upper and lower blades; and

(e) means for moving said paper tube and said tube of preformed plastic material through the bag-forming apparatus.

3,396,639
REFLECTING DEVICES
Jerome H. Lemelson, 85 Rector St., Metuchen, N.J. 08840
Continuation-in-part of application Ser. No. 360,954, June 11, 1953. This application Sept. 23, 1965, Ser. No. 489,654
8 Claims. (Cl. 94—1.5)

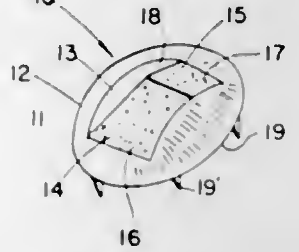

Reflecting display devices are provided which are applicable as delineators or safety reflectors for motor vehicles, roadways and the like. These devices employ a thin layer or sheet of reflex reflecting material containing a multitude of glass spheres embedded in a plastic binder. The material is such that it cannot resist ordinary abrasive forces applied thereto when properly used, by the wheels of a motor vehicle. Accordingly, the devices include a base or support for the sheet reflex reflecting material having means for protecting the material, yet so shaped and designed that the protection means does not substantially interfere with the operation of the reflecting material.

In one form, a reflecting device is shaped to permit its use on the upper surface of a roadway and contains reflex reflecting material which may be viewed by a motor vehicle approaching the device from a plurality of directions. In another form, the device is in the shape of a curb edging containing reflex reflecting material viewable to vehicles traveling the roadway defined by the curb against which it is secured. Other forms include use of the structures defined in the current invention as components of vehicles.

3,396,640
JOINT SEALING DEVICES
Yoshiki Fujihara, Lyons, Ill., assignor to W. R. Grace & Co., Cambridge, Mass., a corporation of Connecticut
Filed Apr. 25, 1966, Ser. No. 545,109
7 Claims. (Cl. 94—18)

An expansion and contraction joint for concrete structures which comprises two opposed strips preferably of stainless steel, a tubular, flexible joint-sealing element interposed between the strips and fastened to each strip by the engagement of its inturned upper marginal flange on

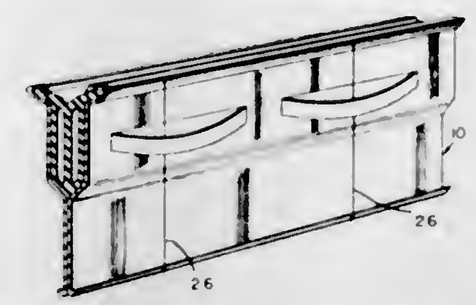

each strip with outwardly directed beads formed on the sealing element.

3,396,641
FABRICATION OF SLAG SURFACES AND STRUCTURES
Lloyd G. Welty, 132 S. Lasky Drive, Beverly Hills, Calif. 90212, and Simon J. Sluter, 5523 Rimpau Blvd., Los Angeles, Calif. 90043, assignors of one-half each to Welty and Sluter
Filed Dec. 16, 1964, Ser. No. 418,840
3 Claims. (Cl. 94—22)

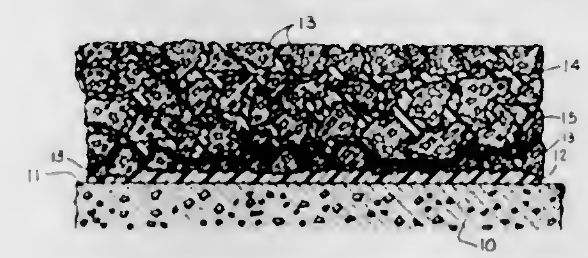

1. In a process for fabricating a composite structural surface, the steps comprising applying to a substrate surface a setting fluid resinous material selected from a group consisting of epoxy, polyester, phenolic, acrylic, polystyrene, polyurethane and silicones, applying and partially embedding a layer of slag particles in said resinous material while it is in its fluid state, said slag particles being particles of a slag material containing metal oxides and produced as a dross of smelting a metal from an ore containing silicates, and applying a filler layer of a composition including an aggregate in admixture with a binder to said surface, whereby the layer of slag particles serves as a bonding layer for the additional layer of composition.

3,396,642
SUBGRADING MACHINE
E. O. Martinson, Milwaukee, Wis., assignor to Koehring Company, Milwaukee, Wis., a corporation of Wisconsin
Filed Mar. 16, 1967, Ser. No. 623,640
5 Claims. (Cl. 94—39)

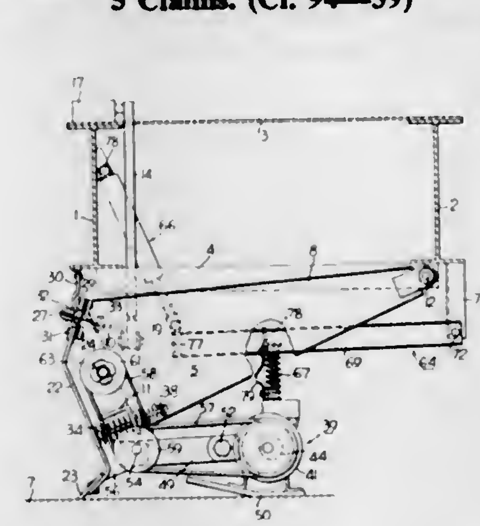

In a subgrading machine for road construction a cutting blade and a screed are actuated by a common vibrating mechanism which causes the cutting blade to reciprocate edgewise in a horizontal direction while the machine is advanced along a base course and which, at the same time, causes the screed to produce a gyratory tamping action upon the graded base material.

3,396,643
SUBGRADING MACHINE
Kenneth V. Johnson, Milwaukee, Wis., assignor to Koehring Company, Milwaukee, Wis., a corporation of Wisconsin
Filed Mar. 6, 1967, Ser. No. 620,876
9 Claims. (Cl. 94—39)

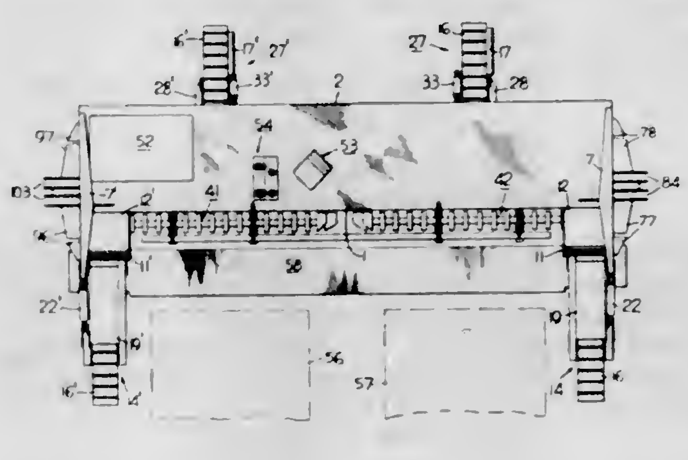

A subgrading machine for road construction has front and rear running gear on which the main body of the machine is supported for sidewise working travel; and end running gear on which the main body together with the front and rear running gear are supported in compacted, elevated condition for endwise transport travel.

3,396,644
MOBILE MIXER AND PAVER
Bradford H. Banks, Clarence, N.Y., assignor of one-half to Abert C. Litteer, Henrietta, N.Y.
Filed Jan. 3, 1967, Ser. No. 606,764.
7 Claims. (Cl. 94—40)

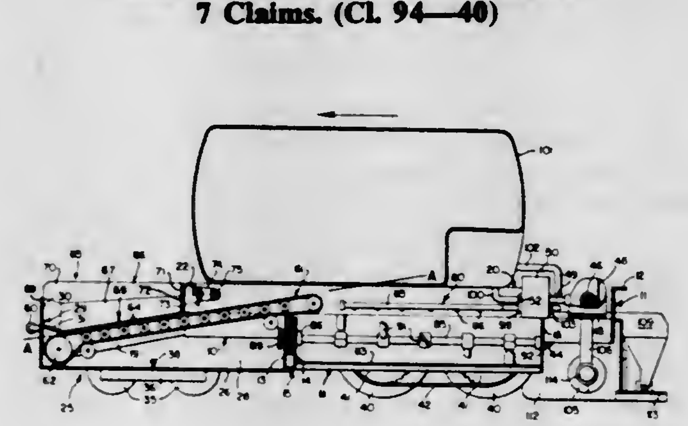

Mobile mixers and pavers for secondary roads which mix metered aggregate, such as crushed stone being supplied from a dump truck, with liquid asphalt supplied from an overhead tank on the paver, and deposit the mixture on the road as a layer are now on the market, these having a front end aggregate supply hopper supplied by the dump truck while in transit, a high lift bucket elevator transferring the aggregate from the feed hopper to an overhead feed bin, a metering gate operating in conjunction with a feed belt controlling discharge from the bin into a mixing chamber, means in the mixing chamber adding liquid asphalt, and means agitating and propelling the mixture to a rear end discharge through which the mixture is deposited on the roadway. The subject machine eliminates the bucket elevator, overhead feed bin, and feed belt. This is accomplished (1) using a smooth

surfaced endless belt to remove the aggregate from the supply hopper and which is set at an included angle to the horizontal less than the angle of repose of the aggregate for this purpose (2) discharging from this smooth surfaced endless belt directly into the forward end of the mixing chamber (3) arranging a strike off plate above the operative surface of this smooth surface endless belt so as to meter its discharge, this strike off plate preferably being above and returning the excess aggregate to the feed hopper, (4) arranging the bottom of the mixing chamber as close to the ground as practicable so as to reduce the elevation of the discharge end of the smooth surfaced endless belt conveyor. All of these numbered features, which summarizes the invention, not only greatly simplify the machine but also permit of the use of a much larger overhead liquid asphalt tank without rendering the machine top heavy.

3,396,645
ELECTROPHOTOGRAPHIC PRINTING APPARATUS
F. Sutherland Macklem, New Canaan, Conn., assignor to Equipment Development Corporation, New Canaan, Conn., a corporation of Massachusetts
Original application Nov. 17, 1965, Ser. No. 508,659, now Patent No. 3,288,605. Divided and this application Sept. 2, 1966, Ser. No. 576,946
10 Claims. (Cl. 95—1.7)

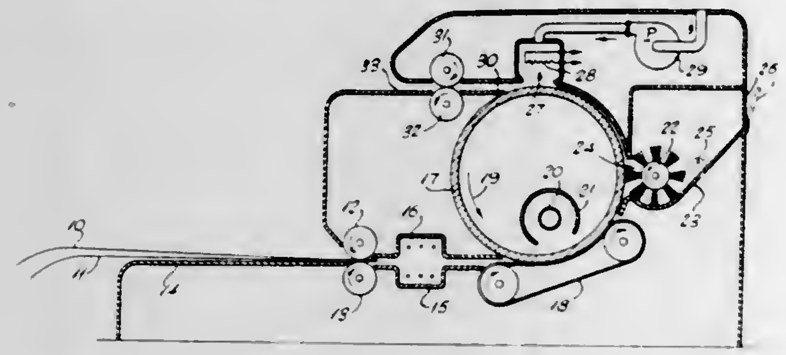

1. Photoreproduction apparatus comprising:
light exposure means providing a supporting surface for a master to be reproduced, roller means for feeding said master into said apparatus in superposed relation with a photoelectric member having a photoelectrically responsive coating on one side thereof,
means for supporting said master and said member so that the photoelectrically responsive coating faces away from said surface when acted upon by said exposure means,
an electrostatic charge region located between said feed rolls and said exposure means for impressing an electrical potential on opposite sides of said master and member while in contact with each other,
and means for electrostatically developing an image on said coating.

3,396,646
PHOTOGRAPHIC APPARATUS, PRODUCT AND PROCESS
Edwin H. Land, Cambridge, Mass., assignor to Polaroid Corporation, Cambridge, Mass., a corporation of Delaware
Filed Apr. 6, 1964, Ser. No. 357,391
34 Claims. (Cl. 95—13)

A camera is disclosed in which a succession of photosensitive sheets are exposed and following exposure, each sheet is advanced through a container of viscous processing liquid while a separate image-receiving sheet is advanced through the container into superposition with the photosensitive sheet within the container. The photosensitive sheet absorbs sufficient liquid to form a transfer image by a process which commences within the container

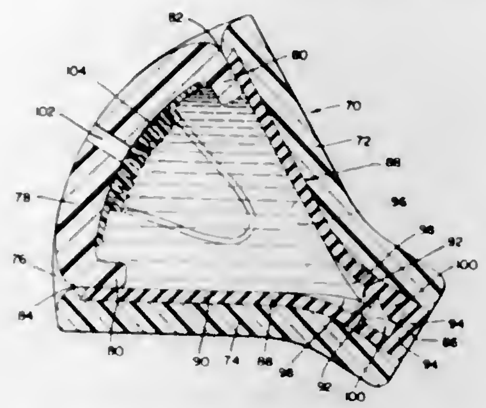

and the viscous liquid is squeezed from between the superposed sheets as they emerge from the container.

3,396,647
PHOTOGRAPHIC FILM ASSEMBLY
Rogers B. Downey, Lexington, Mass., assignor to Polaroid Corporation, Cambridge, Mass., a corporation of Delaware
Filed Dec. 27, 1965, Ser. No. 516,494
6 Claims. (Cl. 95—13)

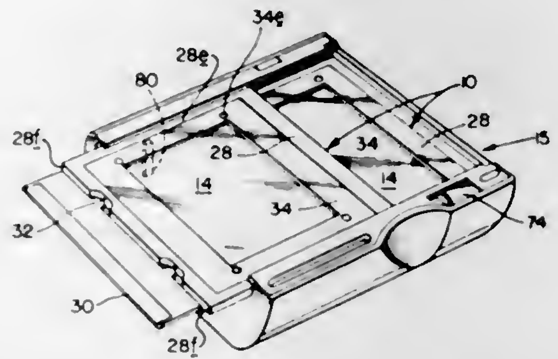

A film unit of a self-developing type, either in black-and-white or color, for use in a miniature camera which includes compressive processing means, such as a pair of pressure rolls. The film unit is suitable for incorporation in a film pack. It is premounted and, following its exposure and processing in the camera, can be immediately viewed, either directly or by projection on a screen.

3,396,648
APPARATUS FOR TREATING PHOTOGRAPHIC SHEET MATERIALS WITH A LIQUID
Richard J. Chen, Winchester, and Nicholas Gold, Arlington, Mass., assignors to Polaroid Corporation, Cambridge, Mass., a corporation of Delaware
Filed Apr. 25, 1966, Ser. No. 544,948
7 Claims. (Cl. 95—13)

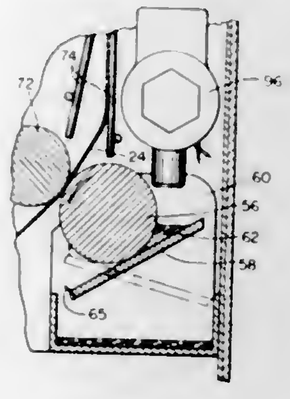

Photographic apparatus for exposing and processing successive sections of a photo-sensitive sheet including an exposure system and a processing section having a roll for applying a processing liquid to an exposed section of said photosensitive sheet. A plate is positioned is tangential contact with the roll to form a trough for receiving a supply of the processing liquid and means are provided for moving the plate to discharge the processing liquid from the trough.

3,396,649
PHOTOGRAPHIC MOUNTING AND CONVERSION DEVICE
Donald R. Bishop, Westwood, and Robert T. Sullivan, Norwood, Mass., assignors to Polaroid Corporation, Cambridge, Mass., a corporation of Delaware
Filed Mar. 18, 1966, Ser. No. 535,468
2 Claims. (Cl. 95—86)

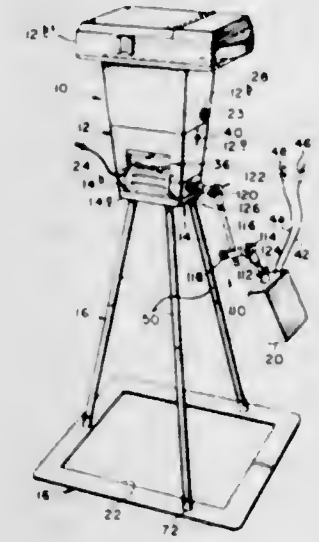

1. A knockdown, readily-compacted and transportable device for so mounting a hand-held close-range type of camera as to enable positioning said camera vertically at a plurality of given heights above a subject plane as to augment its utility in conjunction with the use of supplemental lens means of given characteristics for varying focal lengths, said device comprising a mounting adapter providing a substantially conforming frontal extension of the camera housing and including latching means at a rear surface releasably-attachable to complementary latching means at a front surface of said camera, a plurality of sets of releasable leg members of relatively different length, each set being composed of three legs so releasably attachable at their upper extremities with divergingly-angled frontal surface engaging means of said mounting adapter as to form, when engaged, a tripod flaring outwardly toward its lower extremities, a plurality of rectangular frame-like base elements of relatively different size, each defining a photographic field size and including a plurality of short, upwardly-extending, convergingly-angled, cup-like receptacles for releasably accepting and firmly engaging said lower extremities of one given set of said leg members, the flared characteristics of said leg members providing relatively large field sizes within the confines thereof, the largest of said base elements being of a folding type including two U-shaped half-sections of substantially equal dimensions pivotally connected to one another at their extremities for compacting said largest base element, when pivoted to closed position, to approximately one-half of its dimensions at open functional position, said base element including slidable locking means adapted at one location to overlap adjacent portions of said half-sections for holding said base element firmly at said open position, and at a second location when removed from one of said adjacent portions permitting folding of said half-sections upon one another, other of said base elements being of a non-folding type and adapted to nest within said largest base element and within one another according to their diminishing size so as to occupy a minimum of space for transportation purposes.

3,396,650
PHOTOGRAPHIC APPARATUS
Leon Rubinstein, Natick, Mass., and Arthur J. Sable, Riverside, Conn., assignors to Polaroid Corporation, Cambridge, Mass., a corporation of Delaware
Filed Sept. 13, 1965, Ser. No. 486,958
8 Claims. (Cl. 95—89)

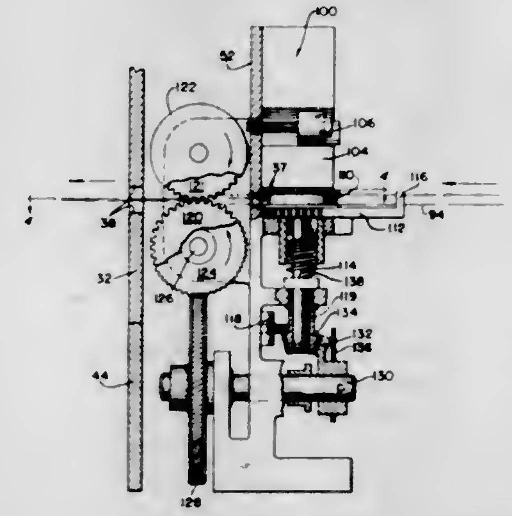

A photographic copying apparatus wherein an area of an image-recording sheet is exposed, superposed with a second sheet and a processing liquid is distributed between the sheets to form a positive transfer image on the second sheet. The processing liquid is initially contained in an elongated container having an end which is rupturable by a hydraulic pressure generated within the liquid. Structure is provided for moving one of a plurality of containers from a storage area to a position adjacent the sheet and thereafter dispensing the processing liquid from the container while the container is moved lengthwise relative to and across the sheet and compressed.

3,396,651
KITCHEN VENTILATING DEVICE
Akima Kamiya, Hiroshi Yoshimura, and Susumu Imai, Nakatsugawa, Japan, assignors to Mitsubishi Denki Kabushiki Kaisha, Tokyo, Japan
Filed Jan. 20, 1967, Ser. No. 610,672
Claims priority, application Japan, Jan. 27, 1966, 41/6,598
2 Claims. (Cl. 98—33)

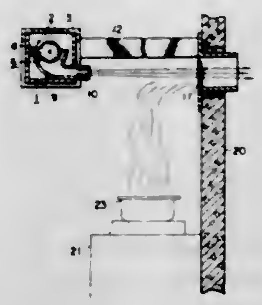

A ventilating device for use in a kitchen is disposed above a kitchen table and arranged to produce a relative wide, flat screen of air stream directed toward a vent hole on one wall of the kitchen. Steam, smoke and the like ascending during a cooking operation is entrained by the screen of air stream and is exhausted along with the air stream externally of the kitchen through the vent

hole. This eliminates the necessity of providing a hood previously used for purpose of ventilation.

3,396,652
VENTILATING SKYLIGHT WITH HEAT VENT
William E. Morrison and Phillip Painter, Indianapolis, Ind., assignors to Jenn-Air Corporation, Indianapolis, Ind., a corporation of Indiana
Filed June 15, 1966, Ser. No. 557,746
13 Claims. (Cl. 98—43)

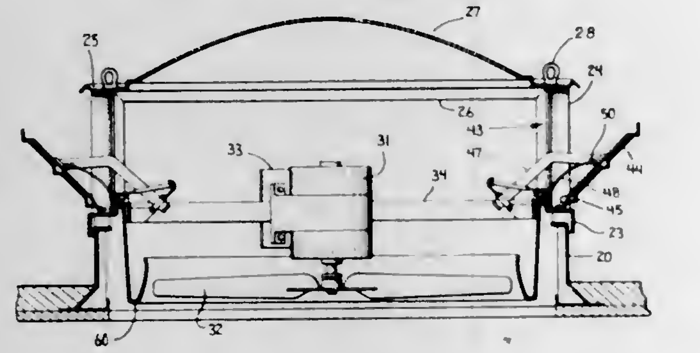

A roof mounted ventilator, skylight and heat-vent unit including a dampering means adapted to be automatically rotated outwardly from its normally closed position to open a side ventilating aperture when either a pressure differential is created across the aperture through the operation of a ventilating fan or the temperature within the unit reaches a predetermined level. When the ventilating aperture is opened, the dampering means directs the flow of air discharged from the unit by the fan in an upward and outward direction with respect to said unit.

3,396,653
LIQUID HEATING APPARATUS
Bruce J. Rutherford, Long Beach, James M. Shipley, El Monte, and Ralph A. Satchwill, Lynwood, Calif., assignors to The Coca-Cola Company, Atlanta, Ga., a corporation of Delaware
Filed Feb. 2, 1967, Ser. No. 613,481
4 Claims. (Cl. 99—282)

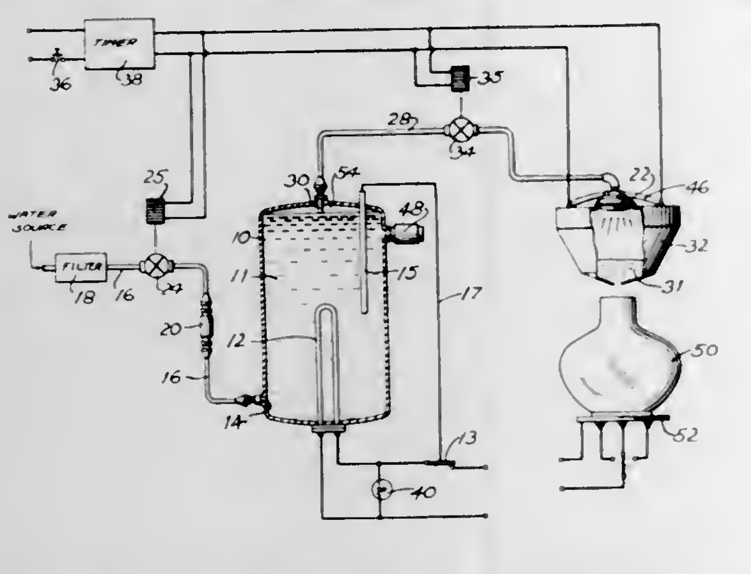

The embodiment disclosed in the following specification is a coffee brewing apparatus employing an input gate valve and output gate valve arrangement for hydraulically isolating the liquid heating chamber during the heating portion of the cycle. The disclosure indicates how the opening of these two valves at the end of the heating portion of the cycle makes possible the dispensing of a controlled even flow of heated water at a predetermined temperature for brewing. A series of operational conditions for large coffee brewers are set forth and it is disclosed how this arrangement meets all these conditions.

3,396,654
COFFEE MAKER
Folke Heden, Vineland, N.J., assignor of one-half to Anthony J. D'Angelo, Vineland, N.J.
Continuation-in-part of application Ser. No. 591,265, Nov. 1, 1966. This application Apr. 18, 1967, Ser. No. 631,667
10 Claims. (Cl. 99—314)

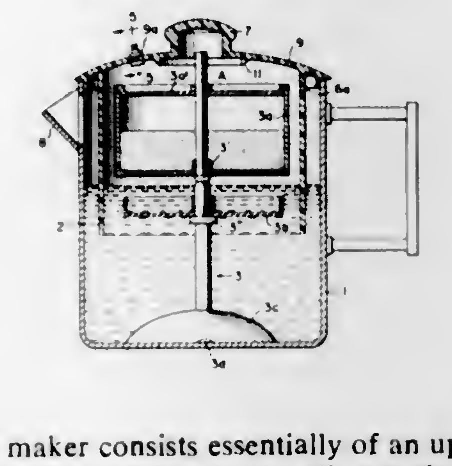

A coffee maker consists essentially of an upwardly open pot proper and a pouring spout adjacent the top thereof, a pump-and-extractor assembly in the pot, and a combination cover-and-inwardly-extending-partition or-baffle member disposed substantially concentrically within the pot and substantially concentrically about the pump-and-extractor assembly, the inward extent of the partition or baffle member being such that, in the assembled coffee maker, the lower portion thereof is immersed in the water contained in the pot for the coffee making, whereby the coffee extraction takes place essentially out of contact with air. The pump-and-extractor assembly advantageously comprises a ground coffee bean-container, the top and bottom of which are perforated for passage of liquid therethrough, and an auxiliary drip interceptor and liquid distributor disposed beneath the container and substantially coextensive in extent with the bottom of the latter, said interceptor-distributor consisting essentially of a peripherally upward flanged plate member.

3,396,655
AUTOMATIC ELECTRIC EGG COOKER
Akinobu Yoshida, Osaka, Tomio Ishikawa, Nishinomiyashi, and Yoshiaki Sano, Kobe, Japan, assignors to Matsushita Electric Industrial Co., Ltd., Osaka, Japan
Filed Dec. 27, 1966, Ser. No. 605,051
Claims priority, application Japan, Dec. 29, 1965, 41/201
6 Claims. (Cl. 99—331)

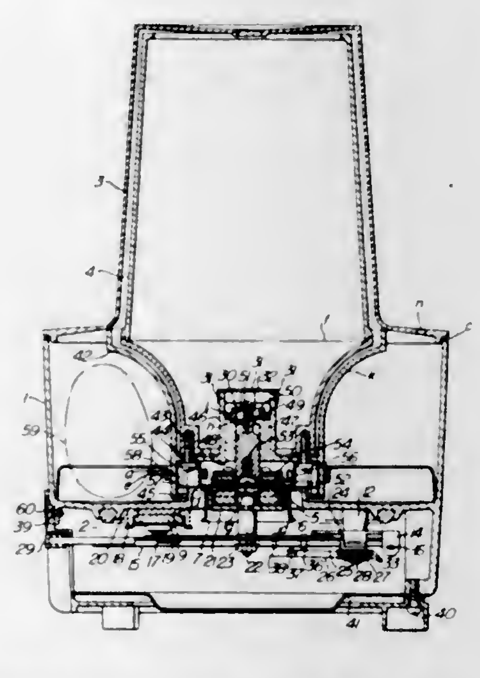

An automatic egg cooker in which, upon completion of the desired amount of cooking, the eggs are rapidly

cooled to prevent overcooking. The cooker includes a boiling pot having electrical heating means, means to control the desired cooking time, means to hold eggs in the pot and a reservoir for cooling water which is released into the cooking pot at the end of the desired cooking time. The cooling water is released by a magnetically operated valve including a permanent magnet and a ferrite having a predetermined Curie point related to the temperature of the cooking pot.

3,396,656
SUSPENSION SYSTEM FOR FOOD DEHYDRATION CENTRIFUGE
John H. Forkner, Fresno, Calif., assignor to The Pillsbury Company, Minneapolis, Minn., a corporation of Delaware
Continuation-in-part of application Ser. No. 157,538 Dec. 6, 1961. This application Sept. 20, 1966, Ser. No. 580,678
14 Claims. (Cl. 99—407)

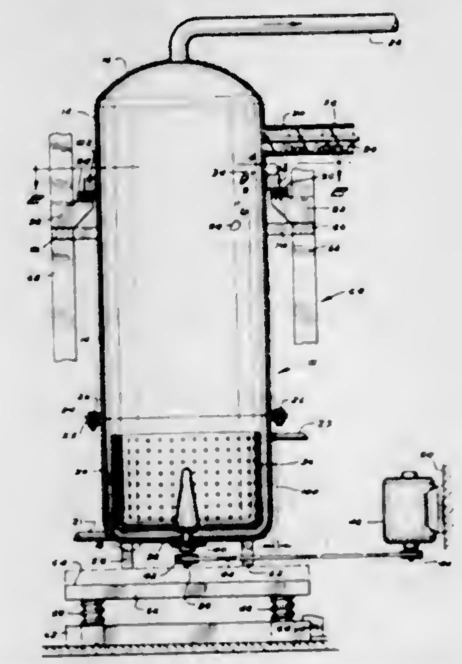

A suspension system for a food dehydration tank containing a centrifuge at its lower end including cushions between a suspending framework and support members secured to the upper end of the tank for allowing lateral deflection of the lower end of the tank when the centrifuge is operated. The cushions consist typically of rubber blocks.

3,396,657
ARRANGEMENT IN RECEIPT-ISSUING MACHINES
Nils Evert Johan Ståhl, Hjortstigen 18, Stocksund, Sweden, and Oscar Uno Larsson, Pettersbergsvagen 86, Hagersten, Sweden
Filed July 15, 1963, Ser. No. 354,188
Claims priority, application Sweden, July 16, 1962, 7,927/62
(Filed under Rule 47(a) and 35 U.S.C. 116)
8 Claims. (Cl. 101—66)

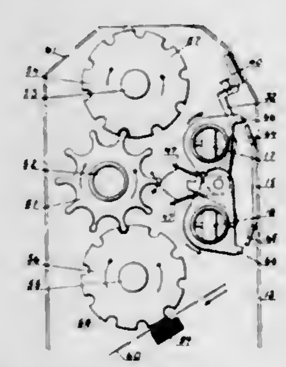

A receipt-issuing machine includes two printing means which are adapted to print selectively different groups of symbols upon a receipt as well as two indicating means showing to a user symbols selected from the two groups of symbols and means adjusting two printing means so that these printing means will be able to print a symbol selected by the user from the two groups of symbols.

3,396,658
SMALL ARMS CARTRIDGE
John J. Scanlon, Jr., Burlington, N.J., and Joseph B. Quinlan, Philadelphia, Pa., assignors to the United States of America as represented by the Secretary of the Army
Filed June 2, 1966, Ser. No. 554,901
6 Claims. (Cl. 102—38)

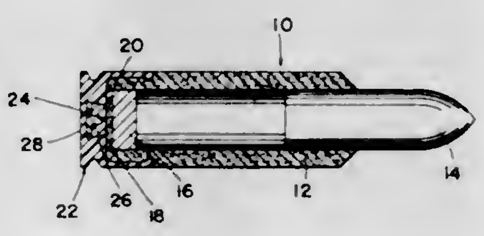

A small arms caseless cartridge for use with a conventional rifle and having an obturator secured to the rearward end of a molded propellant charge. A firing pin is seated in a cavity of the obturator and its forward surface portion is sealed and retained therein by an elastomeric plug, having a forwardly reduced tapering surface by which the sealed firing pin is longitudinally spaced from the primer mix. The obturator is likewise formed of elastomeric material, such as neoprene, and a relatively lighter weight round of ammunition is provided for use in a standard weapon having repetitive firing without the need of a preliminary step in frictionally securing an obturating cup to a bolt face.

3,396,659
DEVICE OF INFLAMING LARGE-BORE PROPELLING CHARGE
Rune V. Akhagen, Eskilstuna, Sweden, assignor to Forsvarets Fabriksverk, Eskilstuna, Sweden, a corporation of Sweden
Filed Apr. 24, 1967, Ser. No. 633,291
Claims priority, application Sweden, Apr. 22, 1966, 5,461/66
2 Claims. (Cl. 102—70)

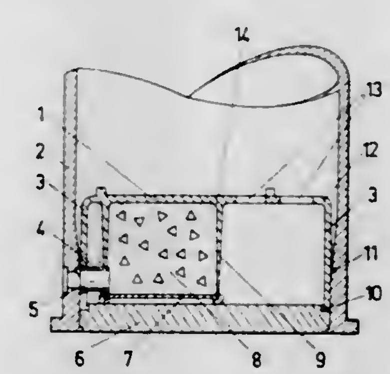

Large bore ammunition having an inflaming charge enclosed in container, which is fixed to the bottom or mantle wall of a charge case and covers only a small part of the bottom of the case but which is enclosed by a box covering the whole area of the bottom of the case. The container walls adjoining the room of the box are weak so as to be broken through and allow combustion gases and burning particles of the inflaming charge to enter the box before escaping to the propelling charge room.

3,396,660
HYPODERMIC DARTS
Frank L. Bilson, West Wickham, and Ronald F. Isted, Charlwood, England, assignors to Jack The Yeoman Sales Limited, London, England
Filed Mar. 16, 1966, Ser. No. 534,727
Claims priority, application Great Britain, Mar. 19, 1965, 11,847/65; Aug. 2, 1965, 33,007/65
5 Claims. (Cl. 102—92)

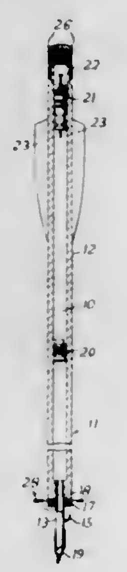

A hypodermic dart, to be fired at wild animals or birds by a gun, a longbow or a crossbow, comprises a hollow shaft, which contains a drug to be administered to an animal or bird. The shaft has a point portion at one end with a passage for the drug extending through it but closed by a pierceable cap over its front end. A piston is provided in the bore of the shaft to expel the drug and is arranged to be driven down the bore by air pressure. A reverse check valve is mounted at the rear end of the shaft together with means for connecting the shaft to a source of air pressure. In use, the dart is charged with a drug and the bore is pressurised, but the piston does not expel the drug until the front end of the point portion strikes an animal and pierces the cap covering it.

3,396,661
PROGRESSIVE BURNING FIREARM PROPELLANT
Harold E. Michael, 30714 Tarapaca Road, Miraleste, Calif. 90732
Filed July 25, 1966, Ser. No. 567,648
2 Claims. (Cl. 102—103)

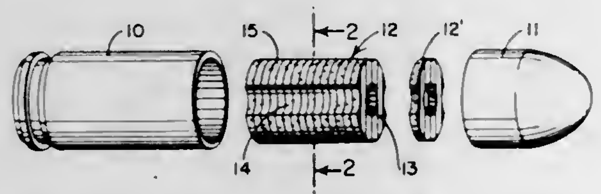

A firearm propellant is provided in the form of a shaped charge made up of a plurality of discs in a stacked coaxial configuration to define a cylindrical shape coaxial with the shell. A central longitudinal bore passes through the stacked discs and a burning inhibitor is provided on portions of at least one of the faces of the various discs in a pattern to leave ignition lines. The exterior of the cylindrical shape defined by the discs includes voids, the entire configuration being such that ignition of the charge generates propellant gas at a rate proportional to time squared to accelerate the projectile at a constant rate.

3,396,662
FLUID MOVER
Ernest C. Okress, Elizabeth, N.J., assignor to American Standard Inc., a corporation of Delaware
Filed Oct. 10, 1966, Ser. No. 585,667
15 Claims. (Cl. 103—1)

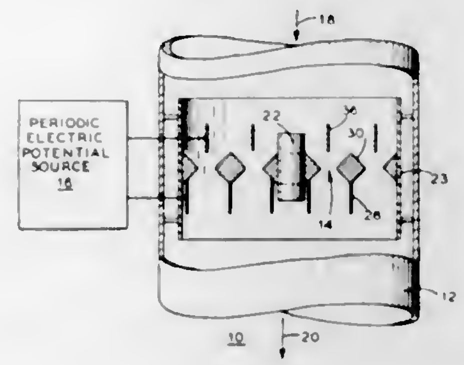

This invention relates to a fluid mover which includes a main tube through which a fluid, such as air, is to be moved, and two other tubes both of which may be coaxial with the main tube. Between the two inner tubes there is positioned an ionizer having one or more charge emitters and one or more charge collectors, the emitters and collectors being spaced axially from each other. A dielectric constrictor is interposed between an emitter and a collector and it is provided with an orifice to permit molecules of the fluid, such as air, to be dragged from the emitter to the collector and to be subject to a Venturi-like effect.

3,396,663
LIQUID PUMP
Thomas A. Bratten, Dayton, Ohio, assignor to General Motors Corporation, Detroit, Mich., a corporation of Delaware
Filed Sept. 15, 1966, Ser. No. 579,620
6 Claims. (Cl. 103—42)

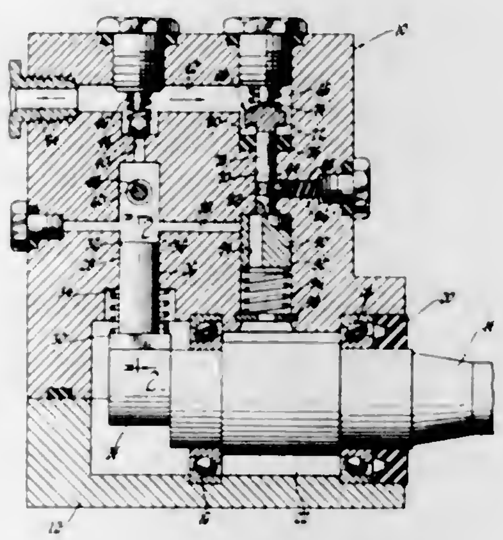

1. A liquid pump having a liquid inlet and a pressurizing chamber and a pressurized liquid outlet, and further comprising:
- a pump output pressure control mechanism including
- a bypass passage operatively fluid connecting said pressurizing chamber and said inlet,
- a bypass passage control valve selectively opening and closing said passage,
- and valve operating means including;
  - pump output pressure actuated means urging said valve open,
  - and a yieldable force exerting means resisting valve opening movement of said output pressure actuated means,
- said valve operating means further including a bore interconnecting said outlet and said inlet,
- a plunger in said bore having an enlarged head on one end in said outlet and the other end engaging said valve for operation thereof by linear movement of said plunger in said bore,
- and a seal substantially but incompletely sealing said plunger relative to said bore adjacent said enlarged head,
- said plunger enlarged head being spaced from said seal when said valve is closed whereby said first effective area is the cross section area of said plunger in said bore,
- said plunger enlarged head having a seat thereon engaging said seal in substantially complete sealing relation when said valve is open whereby said second effective area is the effective seat cross section area of said plunger enlarged head,
- said pump output pressure actuated means having a first pump output pressure responsive effective area when said valve is closed and a second greater pump output pressure responsive effective area when said valve is open.

3,396,664
FLOATING RING VISCOUS PUMP
Richard J. Smith, North Wilmington, Mass., assignor to General Electric Company, a corporation of New York
Filed Sept. 28, 1966, Ser. No. 582,593
7 Claims. (Cl. 103—84)

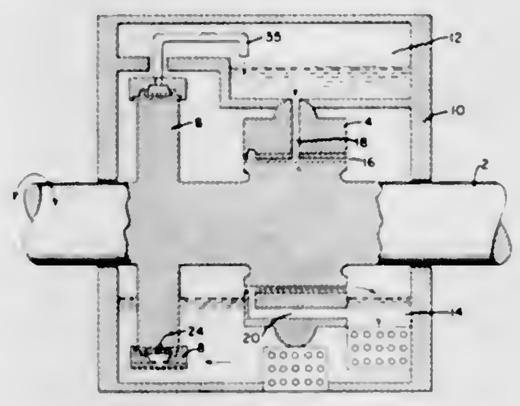

Viscous drag pump having pumping ring disposed between pump, disc and pump casing.

3,396,665
APPARATUS FOR ADJUSTING THE NATURAL FREQUENCY OF ROTATING EQUIPMENT
Merril Berman, Denver, Colo., assignor to Harrworth, Inc., a corporation of Delaware
Filed Nov. 7, 1966, Ser. No. 592,428
9 Claims. (Cl. 103—87)

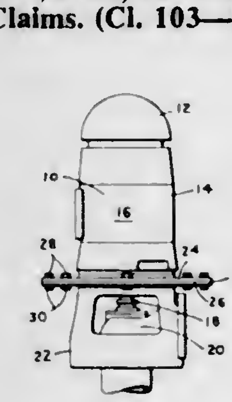

A frequency adjusting coupling means which joins standard components of a drive system at locations either spaced or offset from the normal connecting points of these components. The use of the frequency coupling means alters the rigidity of the connection between the components joined thereby and this change in rigidity alters the natural frequency of the entire drive system.

3,396,666
TRANSMISSION WITH VARIABLE VOLUME VANE PUMP
Yunus E. Moochhala, Bombay, India, and Ronald H. Haas, Mount Prospect, Ill., assignors to Borg-Warner Corporation, Chicago, Ill., a corporation of Illinois
Filed Dec. 13, 1965, Ser. No. 538,435
6 Claims. (Cl. 103—120)

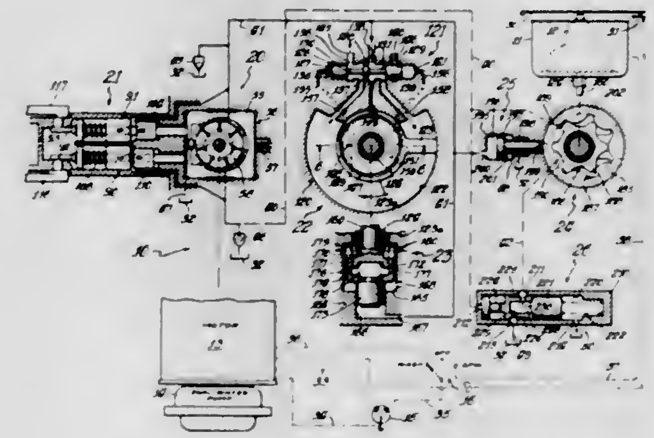

A variable volume fluid pump having a rotor with vanes mounted in slots therein and a cam ring surrounding the rotor. A port plate adjacent the rotor. A pair of fluid cavities in the port plate. The port plate having alternate inlet or outlet cavities and arcuate ports providing communication between the cavities and a plurality of the spaces formed between the vanes, rotor and cam ring. Second arcuate ports in the port plate communicating fluid pressure to the inner radial end of the vanes to urge the vanes into engagement with the cam ring.

3,396,667
ROTARY PUMPS FOR VISCOUS FLUIDS
Armin Schmitt, Kaiserslautern, Germany, assignor to Eisenwerke Kaiserslautern G.m.b.H., Kaiserslautern, Germany
Filed Oct. 24, 1966, Ser. No. 588,986
Claims priority, application Germany, Oct. 29, 1965 E 30,386
5 Claims. (Cl. 103—126)

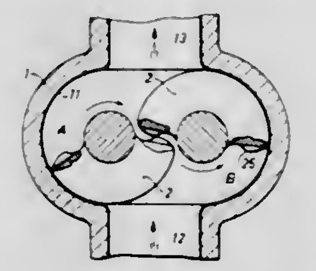

1. A rotary pump for conveying viscous fluids or suspensions comprising an oval housing having an intake duct and an outlet duct, an enamel coating on the inner wall of said housing, a pair of parallel shafts rotatably mounted in said housing and laterally spaced from each other and adapted to be driven at the same speed in opposite directions, and a pair of rotors consisting of a noncorrosive and wear-resistant plastic secured to said shafts within said housing and serving as pump vanes, said shafts also serving as cores of said rotors, each of said rotors having a segment-shaped cross section and a pair of longitudinal working surfaces determining the angle of the segment, each of said working surfaces having a substantially S-shaped cross section merging by a continuous curve with the outer peripheral surface of said rotor and substantially tangentially with said core.

3,396,668
ROTARY DEVICES
Jorgen Frederik Waldorff, Nordborg, Denmark, assignor to Danfoss A/S, Nordborg, Denmark, a company of Denmark
Filed Nov. 22, 1966, Ser. No. 596,222
Claims priority, application Germany, Nov. 23, 1965, D 48,732
3 Claims. (Cl. 103—131)

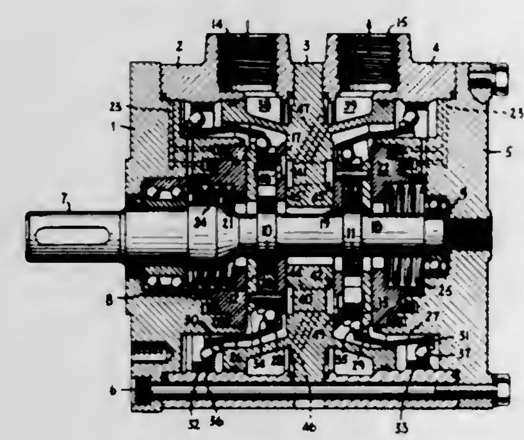

Rotary devices in which chambers are defined by spur external gears mounted in spur internal gears, which rotary devices typically may be used as hydraulic pumps or hydraulically driven motors, one of the types of gears being guided so that the center of gravity thereof rotates about the fixed center of gravity of the other type of gears, the so-guided gears being a plurality n in number and being angularly displaced from one another by $360°/n$.

3,396,669
ROLLER PUMP
Hazen F. Everett, 120 Bedford Road, Hillsdale, N.J. 07642
Filed July 13, 1966, Ser. No. 564,988
9 Claims. (Cl. 103—149)

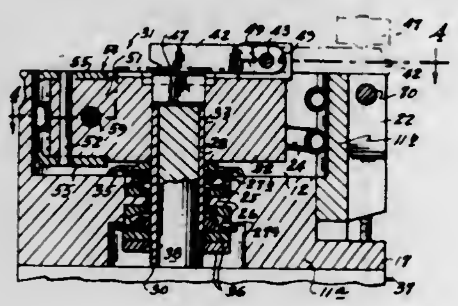

A roller pump having a fluid conducting flexible tube arranged in a helical turn against a cylindrical side wall surface of a housing cavity so as to have fluid pumped through the tube when squeezed against such surface by a roller rolling along the turn is provided with a tubular shaft journalled coaxially with the side wall surface and having a rotor fixed thereto and carrying the roller, a drive shaft loosely received in the tubular shaft, a handle pivoted on the rotor to move between a radially outward directed position where the handle is manually actuable to effect rotation of the rotor independent of the drive shaft and a stored position extending over the tubular shaft, and a coupling rotatably connecting the drive shaft and tubular shaft only when the handle is in its stored position. Desirably, such coupling is constituted by a flat-sided element carried by the handle and which may constitute a knob thereon, and diametrical notches or recesses in the drive shaft and tubular shaft alignable with each other to receive the flat-sided element in the stored position of the handle.

3,396,670
HYDRAULIC PUMP OR MOTOR
Stephen S. Baits, Rockford, Ill., assignor to Sundstrand Corporation, a corporation of Delaware
Filed Oct. 10, 1966, Ser. No. 585,673
10 Claims. (Cl. 103—162)

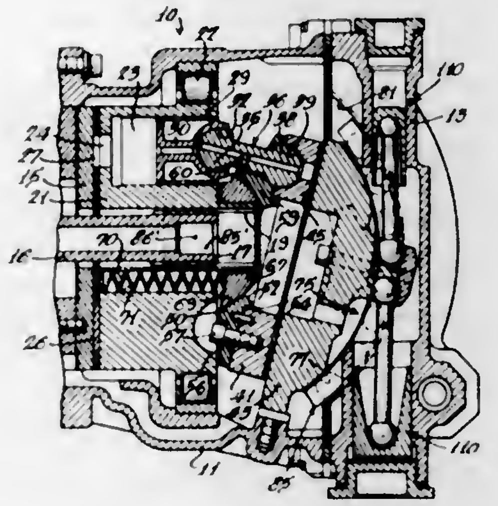

A variable displacement hydraulic unit having a pivotal cam for reciprocating pistons in the unit with the cam being mounted in the unit's housing by roller bearings which are assured of rolling motion by a bearing cage driven by the cam.

3,396,671
ADJUSTABLE TAMPER BLADE ASSEMBLY
Wilmer W. Roseberry, Ludington, Mich., assignor to Jackson Vibrators, Inc., Ludington, Mich., a corporation of Illinois
Filed Feb. 21, 1966, Ser. No. 529,113
2 Claims. (Cl. 104—13)

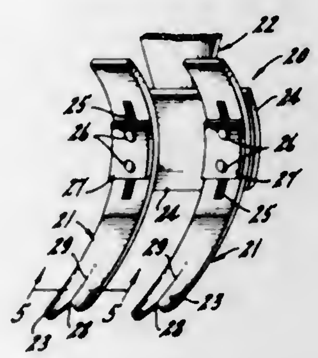

A railroad ballast tamping blade assembly in which the work is done by adjustably mounted blades that can be shifted to compensate for wear erosion without varying the required tip angles. The blades are formed so that the step configuration of the blades is maintained through the full range of adjustment.

3,396,672
OVERHEAD CONVEYOR
Pier Carlo Zerbi, Turin, Italy, assignor to Fiat Societa per Azioni, Turin, Italy
Filed Feb. 15, 1966, Ser. No. 527,572
Claims priority, application Italy, Feb. 16, 1965, 3,815/65
3 Claims. (Cl. 104—172)

A conveyor comprising sets of interconnected spaced carriers movable along a bottom track, the leading carrier of each set engageable by one of a number of pawls depending from a pull chain guided by a top rail. At least one station along the conveyor track comprising a plurality of cams and having externally controlled means for moving the leading cam of the station to its operative

position in which it raises the pawl and disengages it from the leading carrier, the other cams of each station

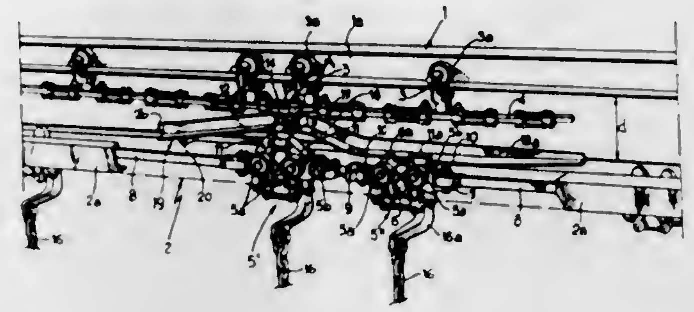

being brought to their operative positions by the trailing carriers of each set.

3,396,673
ARTICULATE RAILWAY CAR CONNECTOR AND TRUCK
Kenneth V. Livelsberger, and Frederick C. Kulieke, Alliance, Ohio, assignors to Amsted Industries Incorporated, Chicago, Ill., a corporation of New Jersey
Filed Sept. 8, 1966, Ser. No. 577,888
7 Claims. (Cl. 105—4)

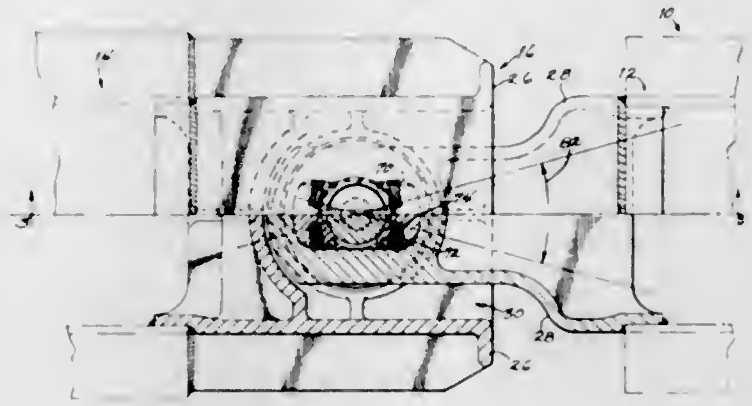

In a universal connector for railway cars, a male connector telescopes within a female connector and is pivotally connected thereto by a pin for horizontal movement. The male connector is seated on a spherical bearing that is in sliding engagement with a spherical bearing surface in the bottom of the female connector. Opposed spherical bearings are biased against opposed spherical bearing surfaces in the male connector on opposite sides of the pin and are engageable with said pin for vertical pivotal movement between the two connectors.

3,396,674
ELEVATABLE AND ROTATABLE RAILWAY TRUCK
Shoichi Tani, Kitakyushu, Japan, assignor to Yawata Iron & Steel Co., Ltd., Tokyo, Japan, a corporation of Japan
Filed Dec. 27, 1966, Ser. No. 605,030
3 Claims. (Cl. 105—157)

A truck for carrying a heavy object, such as a converter for steel, said truck comprising a wheel frame having wheels mounted in fixed positions thereon for rotation in only one direction, a set of extensible pressure exerting devices mounted only on said wheel frame and extensible in the vertical direction and capable of drawing the wheel frame upwardly, an upper frame mounted on the upper end of said devices and movable up and down by said devices, a heavy object supporting frame rotatably mounted on said upper frame for rotation in a horizontal plane and having a heavy object support on the upper part thereof and struts extending downwardly from the bottom thereof, the struts being sufficiently long so that when

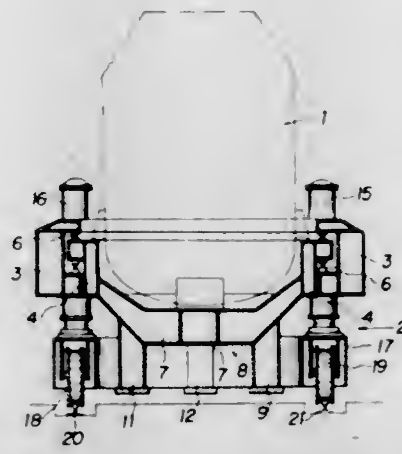

the object supporting frame is lowered until the struts contact the ground, the wheel frame can be drawn upwardly to lift the wheels clear of the surface on which they roll, whereby the wheel frame and upper frame can be turned around the object supporting frame.

3,396,675
DUAL HOPPER OUTLET CLOSURE STRUCTURE
Eric S. Stevens, St. Charles, Mo., assignor to ACF Industries, Incorporated, New York, N.Y., a corporation of New Jersey
Filed Feb. 17, 1966, Ser. No. 528,291
10 Claims. (Cl. 105—280)

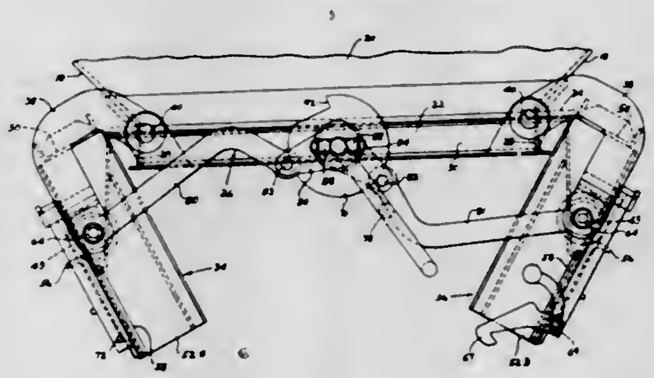

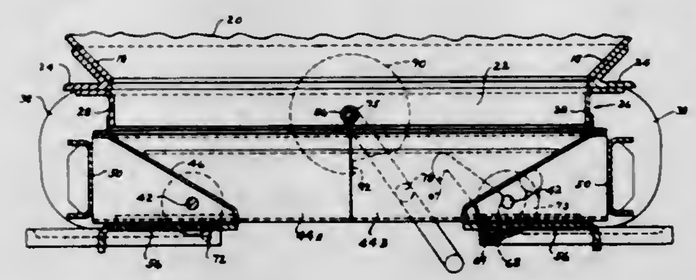

A bottom outlet structure for a hopper having a pair of gate carrying structures pivotally movable in opposed directions to a full open position for a rapid discharge of lading from the hopper. A separate gate is mounted on each gate carrying structure for relative sliding movement and may be separately opened and closed relative to the associated gate carrying structure for controlled flow of lading from the hopper independently of the movement of the gate carrying structure.

3,396,676
EXTRUSION APPARATUS
Mark Hasten, Floyd Lobash, and Dennis L. Pommer, Minneapolis, Minn., assignors to General Mills, Inc., a corporation of Delaware
Filed May 2, 1966, Ser. No. 546,710
9 Claims. (Cl. 107—14)

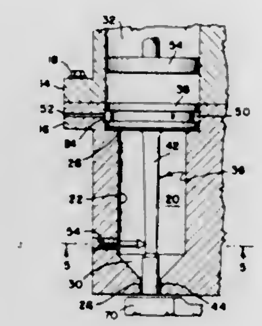

An apparatus for forming an extruder tubular product having a uniform wall thickness. A mandrel or die insert is mounted within a die chamber so that one end projects into an extrusion orifice in the die chamber thereby forming an annular passage. The projecting end of the mandrel is eccentrically positioned within the orifice, and adjusting means are provided for laterally moving the eccentrically positioned projecting end with respect to the orifice, thereby concentrically positioning it within the orifice.

3,396,677
SHAPED DOUGHNUT CUTTING DEVICE
Floyd N. Adams, Westbury, Victor D. Cooper, Jamaica, and John E. Sommers, Valley Stream, N.Y., assignors to DCA Food Industries Inc., New York, N.Y.
Filed June 3, 1966, Ser. No. 555,111
4 Claims. (Cl. 107—14)

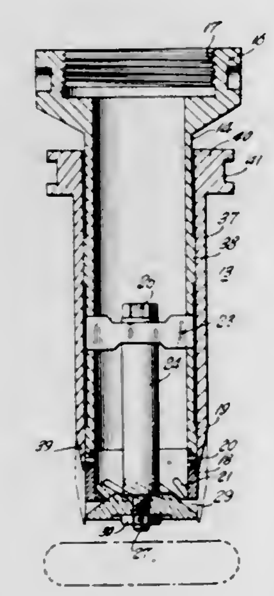

An apparatus for producing French cruller-shaped dough pieces includes a vertical tubular nozzle connected to a pressurized dough source and having inclined slots in its bottom peripheral wall, a coaxial closure disc positioned below the nozzle, and a cutter sleeve slideably engaging the nozzle and movable between a lowered closed position engaging the disc and a raised position exposing the slots. The disc has grooves in its upper face extending along the directions of the slots or a wall, is formed across the bottom of the nozzle and has slots therein connected to the inclined slots.

3,396,678
PALLET CONSTRUCTION
Richard H. Jensen, Los Angeles, Calif., assignor to Brownline Corporation, Redondo Beach, Calif., a corporation of California
Filed May 3, 1967, Ser. No. 635,736
11 Claims. (Cl. 108—51)

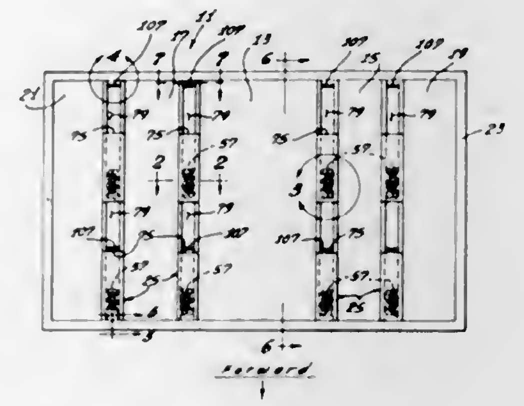

This disclosure describes an improved pallet construction of the type particularly adaptable for use as a seat pallet. In the specific embodiment described herein, the improved pallet includes a plurality of panels with each pair of adjacent panels interconnected by an elongated integral lock rail of simplified construction. Passenger seats can be mounted on the pallet with seat fittings which are mounted on the lock rails.

3,396,679
DRAFTING-DIGITIZING APPARATUS
Charles Hubbard Little, Pepper Pike, Cleveland, and Waldo H. Kliever and Eugene L. Wiemels, Cleveland Heights, Ohio, assignors to Universal Drafting Machine Corporation, Bedford Heights, Ohio, a corporation of Ohio
Original application Mar. 4, 1963, Ser. No. 262,590. Divided and this application Feb. 21, 1966, Ser. No. 528,877
2 Claims. (Cl. 108—144)

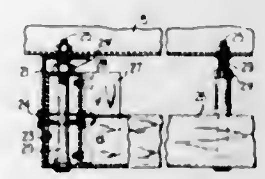

A table assembly for supporting automatically controlled drafting-digitizing apparatus and sheet-like material such as drawing paper on which the said apparatus performs drafting-digitizing operations. The assembly includes a table top which includes, in part, a sheet material hold-down means. The assembly is provided with level adjusters for adjusting the level of the table top at the end portions of the assembly and additionally at portions intermediate of said end portions.

3,396,680
THERMAL REACTORS
Peter J. Hubbard, Norwalk, Conn., assignor to Dorr-Oliver Incorporated, Stamford, Conn., a corporation of Delaware
Continuation-in-part of application Ser. No. 524,715, Feb. 3, 1966. This application Feb. 28, 1967, Ser. No. 619,478
19 Claims. (Cl. 110—8)

The present invention relates to improvements on the reactor disclosed in the above cited application. More particularly the present invention relates to an improved temperature control, a more efficient system control, a

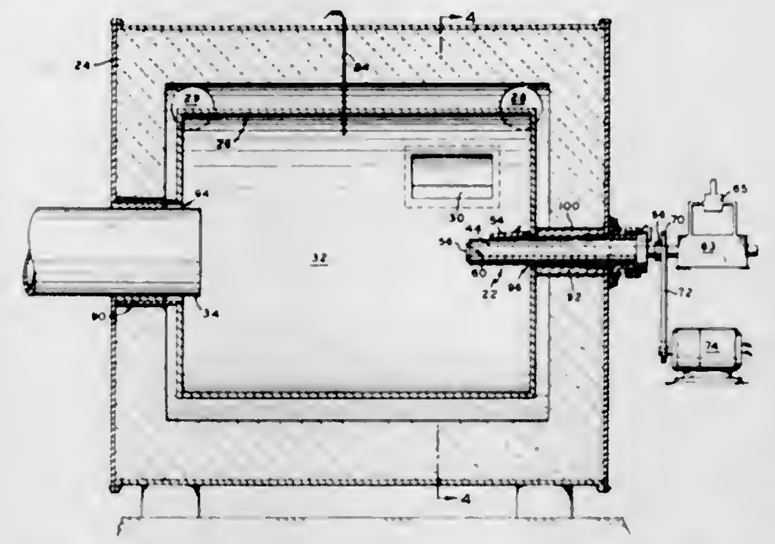

novel feed arrangement, and an improved support arrangement for the combustion chamber in the housing.

3,396,681
CYCLONIC REACTOR
Peter J. Hubbard, Norwalk, Conn., assignor to Dorr-Oliver Incorporated, Stamford, Conn., a corporation of Delaware
Continuation-in-part of application Ser. No. 524,715, Feb. 3, 1966. This application Dec. 6, 1967, Ser. No. 688,558
30 Claims. (Cl. 110—8)

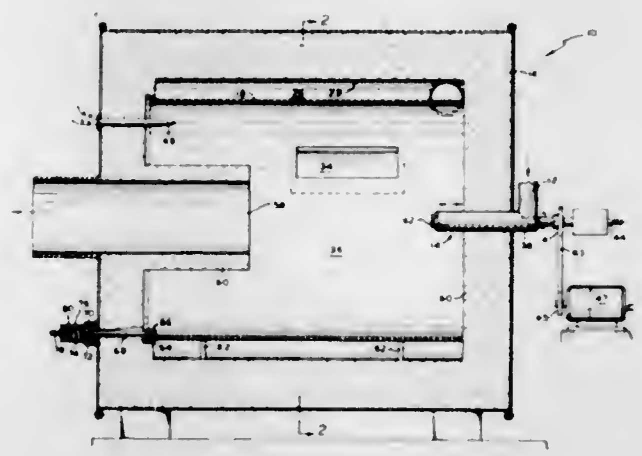

The present invention relates to a cyclonic reactor for thermally treating sludge. The reactor comprises an outer housing having a shell therein in spaced relation to the inner wall of the housing. Combustion gases are introduced into the space between the housing and the shell before they are channeled into the shell, thereby heating both the inside and outside of the shell. Feed material is introduced at either end of the shell, axially or transversely to the longitudinal axis of the shell. The thermally treated products are removed by a discharge conduit which extends axially into the shell.

3,396,682
DISPOSER FOR COMBUSTIBLE AND METAL REFUSE
John K. Blatchford, St. Joseph, Mich., assignor to Whirlpool Corporation, a corporation of Delaware
Filed Jan. 5, 1967, Ser. No. 607,528
9 Claims. (Cl. 110—18)

The disclosed structure comprises a disposer for combustible and metal refuse including means for incinerating a combustible portion of the refuse to cause the metal portion thereof to be substantially free of combustible material, means for decomposing the metal refuse, and means for delivering the metal refuse from the incinerating means to the decomposing means upon

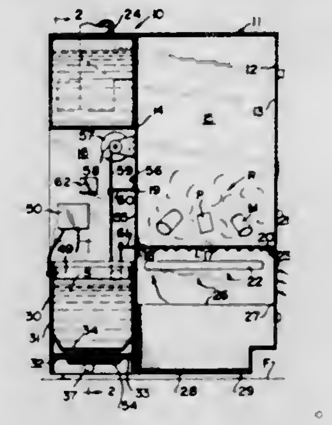

completion of the incineration of the combustible portion of the refuse.

3,396,683
MEANS FOR PRE-HEATING AIR FOR INTRODUCTION INTO INCINERATORS
Lewis M. Ford, Memphis, Tenn., assignor to Steelcraft Corporation, Memphis, Tenn., a corporation of Tennessee
Filed June 21, 1967, Ser. No. 647,758
5 Claims. (Cl. 110—18)

An apparatus for withdrawing preliminarily heated air from the structure of an incinerator, introducing the same for additional heating through a duct exposed to the heat of the interior of the incinerator into a blower for sub-

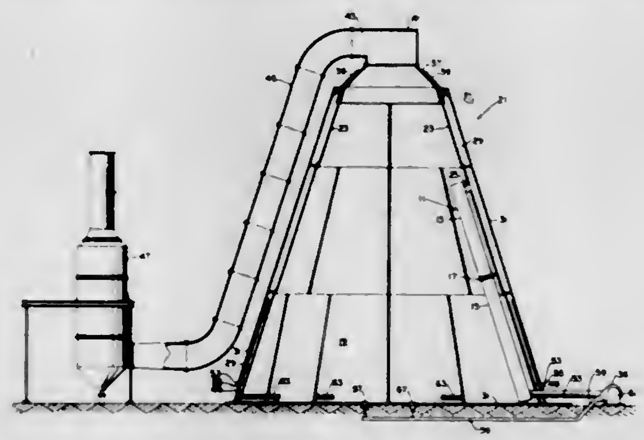

sequent delivery to the combustion chamber of the incinerator.

3,396,684
BASIC REFRACTORY FURNACE STRUCTURE
William R. McLain, Chicago, Ill., assignor to United States Steel Company, a corporation of Delaware
Filed Oct. 10, 1966, Ser. No. 585,425
8 Claims. (Cl. 110—99)

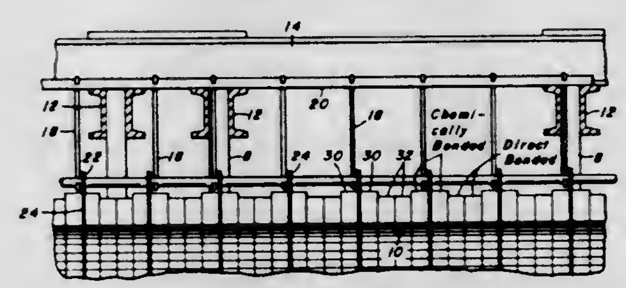

A basic refractory furnace structure, particularly an open hearth furnace roof, having a plurality of courses of direct bonded basic brick and a plurality of courses of chemically bonded basic brick in which at least some of the courses of direct bonded basic brick abut courses of chemically bonded basic brick. At least some of the courses of chemically bonded basic brick are arranged in pairs with a steel tie plate between the courses of each pair.

3,396,685
AUXILIARY FERTILIZER APPLICATOR
Elmo R. Meiners, Anchor, Ill., assignor to M & W Gear Co., Gibson, Ill., a corporation of Illinois
Filed Sept. 16, 1966, Ser. No. 579,993
2 Claims. (Cl. 111—7)

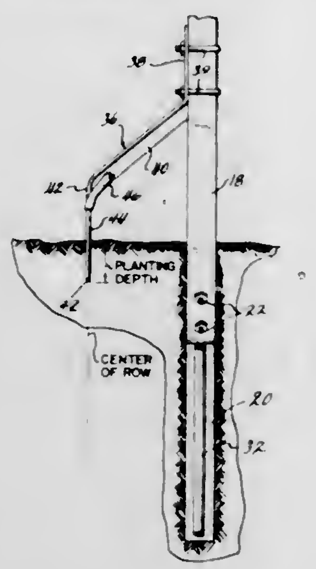

An auxiliary fertilizer applicator for a conventional fertilizer applicator wherein the conventional applicator delivers liquid fertilizer at root depth between planted rows of corn or the like and the auxiliary applicator delivers fertilizer shallowly at planting depth along the center of the row.

3,396,686
SEWING APPARATUS
Ralph L. Davidson, Southborough, and Carroll C. Parker, Northboro, Mass., assignors to Curtis & Marble Machine Co., Worcester, Mass., a corporation of Massachusetts
Filed May 27, 1966, Ser. No. 553,348
10 Claims. (Cl. 112—2)

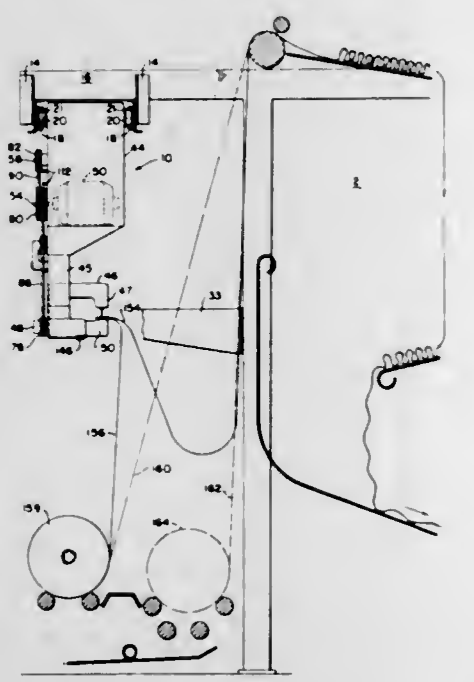

The invention is a sewing machine for sewing the leading end of a supply roll of cloth to the trailing end of a loom roll feeding a scray. The machine is a sewing head at the end of a carriage dependent from an overhead trolley in such manner as to provide storage space for the rolls below the sewing head and clear, unobstructed passageway between the sewing head, the rolls, and the scray in order to permit rapid joinder of said ends. Means are provided to motivate the sewing head and the carriage for traversal of the latter.

3,396,687
TUFTING MACHINE HAVING PLURAL SHIFTABLE NEEDLEBARS AND THE METHOD OF MAKING A TUFTED FABRIC
Henry F. Nowicki, Norristown, Pa., assignor to James Lees & Sons Co., Bridgeport, Pa., a corporation of Delaware
Continuation-in-part of application Ser. No. 272,648, Apr. 12, 1963. This application Mar. 1, 1966, Ser. No. 530,915
5 Claims. (Cl. 112—79)

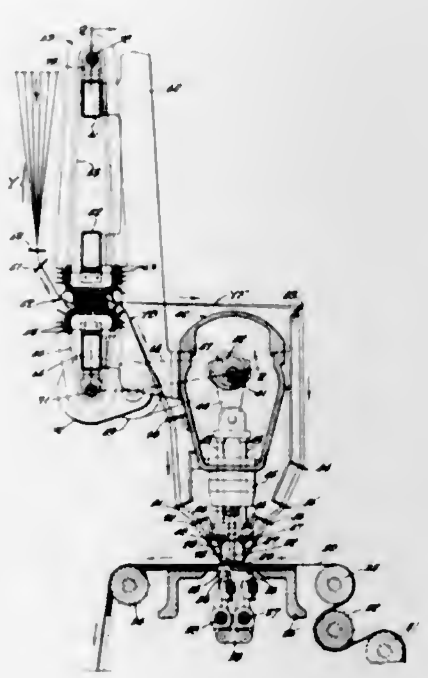

4. In apparatus for producing figure tufted pile fabric the combination which comprises a tufting machine having a fixed tufting head, a throat, a pattern attachment for feeding selected differential lengths of pile yarns to said throat, driving means for said pattern attachment, means for advancing a backing across said throat, a plurality of needle carrying needlebars, means mounting said needlebars on said fixed head for reciprocation relative to said fixed head in a direction transverse to the direction of advance of a backing through said tufting machine, means for reciprocating said needlebars toward and away from said backing so that the needles penetrate portions of said backing as it is advanced over the throat whereby one face of the backing will be covered by pile yarns, and means for cyclically displacing at least two of said needlebars across said backing in synchronized timed relation to each other, and to said pattern attachment whereby at least two complete sets of different types of yarn will be tufted through the entire surface of the backing, and in which the rows of stitches of each set of pile yarns will be independently traversed across the width of the backing to produce a unitary pattern effect on the backing.

3,396,688
ROTARY LOOPING DEVICE FOR A SEWING MACHINE
Yoshihiko Nakajima and Kazumasa Hara, Tokyo, Japan, assignors to Janome Sewing Machine Co., Inc., Ltd., Tokyo, Japan
Continuation-in-part of application Ser. No. 536,364, Mar. 22, 1966. This application July 18, 1966, Ser. No. 569,547
Claims priority, application Japan, July 17, 1965, 40/43,070
15 Claims. (Cl. 112—228)

A rotary hook member is driven by an eccentric drive shaft which is connected to the hook member by coupling members which alternately engage and disengage, and form in disengaged condition a slanted gap extending in the direction of the loop to permit dropping of a loop portion into a cutout so that the loop passes between the coupling members and is withdrawn by the needle.

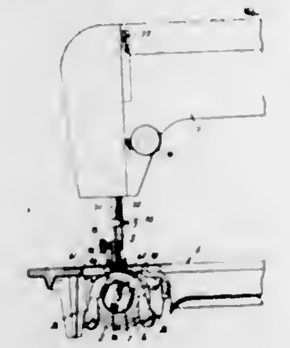

The present application is a continuation-in-part application of our copending application Ser. No. 536,364, filed Mar. 22, 1966, entitled "Rotary Loop Forming Device for Sewing Machines."

3,396,689
SAILBOAT RIGGING
Edmund T. Sommer, 6303 Wynkoop Blvd., Bethesda, Md. 20034
Filed July 25, 1967, Ser. No. 655,830
10 Claims. (Cl. 114—98)

Rigging is connected with an intermediate portion of the boom of a sailboat for controlling the position thereof. A swingably mounted support post swingably supports block means which receives a first line interconnected with the boom for pulling on the boom for adjusting the position thereof. A further line is reeved over additional block means and interconnected with the support post for adjusting the position of the support post.

3,396,690
POWER TRANSMISSION FOR AN AMPHIBIOUS VEHICLE
Mamoru Tsunazawa, Tokyo-to, Japan, assignor to Ishikawajima-Harima Jukogyo Kabushiki Kaisha, Tokyo-to, Japan, a company of Japan
Filed Oct. 4, 1966, Ser. No. 584,185
Claims priority, application Japan, May 10, 1966, 41/43,195
1 Claim. (Cl. 115—1)

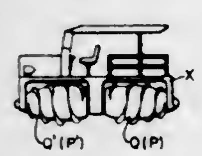

This specification discloses an amphibious vehicle including four screw rotors located at the four corners of the vehicle and driving connections for rotating each rotor independently of the others and in reverse directions. Each pair of diagonally disposed rotors constitute a set and each rotor includes a helical fin. The helices of the fin of one set are wound oppositely to the helices of the other set.

3,396,691
DEVICE FOR EXTENDING AND RETRACTING EQUIPMENT UNDER ICE SURFACES
Arthur Jones, 5720 Roblin Blvd., Winnipeg, Manitoba, Canada
Filed Feb. 27, 1967, Ser. No. 618,899
11 Claims. (Cl. 115—.5)

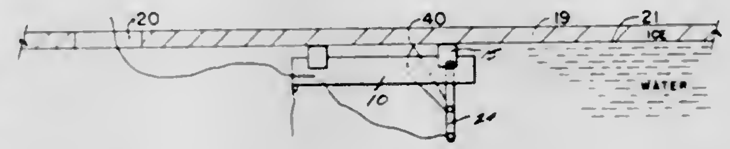

Apparatus for step by step propelling of a floating sled under the ice and away from the operator wherein the sled has a rectangular float with a rectangular aperture therein, a non-buoyant three rung ladder pivoted at its upper rung within said aperture, a string attached to the lower rung, and a buoyant ice engaging arm pivoted to the middle rung. Alternate tensioning and releasing of the string causes the arm and ladder linkage and float to inch across the under surface of the ice.

3,396,692
DRIVE ARRANGEMENT FOR MOTOR BOATS
Karl Abdon Bergstedt, Goteborg, Sweden, assignor to AB Penta, Goteborg, Sweden
Filed Nov. 29, 1966, Ser. No. 597,769
13 Claims. (Cl. 115—35)

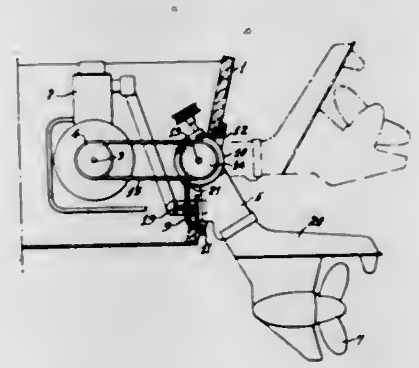

An inboard-outboard drive arrangement for a boat wherein an inboard engine in laterally disposed position is fixed in the boat and connected by a flexible drive means to a driven shaft parallel to the engine shaft, the driven shaft entering a housing disposed in a transom opening. The housing comprises a portion of an outboard leg tiltable on the axis of the driven shaft and including a lower portion which rotates for steering and which is provided with a propeller. A closure member is provided to seal the transom opening.

3,396,693
PIPE CONNECTION WITH SEAL FOR OUTBOARD BOAT DRIVE UNIT
Karl Abdon Bergstedt, Goteborg, Sweden, assignor to AB Penta, Goteborg, Sweden
Filed Nov. 29, 1966, Ser. No. 597,785
Claims priority, application Sweden, Dec. 1, 1965, 15,550/65
14 Claims. (Cl. 115—41)

A pipe connection between a boat and outboard drive power leg is completed through a pipe entering loosely into a chamber. A sealing pad is engaged around the

pipe and seals against the face of the chamber due to forward propeller thrust. Upon tilting of the outboard

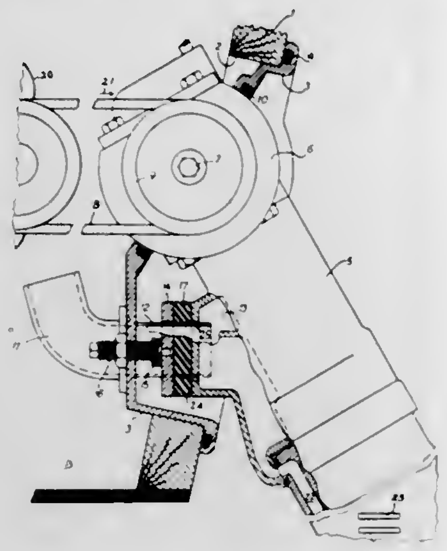

leg, the pipe withdraws from the chamber carrying the sealing pad with it.

3,396,694
BIN LEVEL INDICATOR WITH SCORED DIAPHRAGM
George E. Gruber, Port Sanilac, Mich., assignor to Monitor Mfg., Inc., Minden City, Mich., a corporation of Michigan
Filed Dec. 1, 1966, Ser. No. 598,479
4 Claims. (Cl. 116—114)

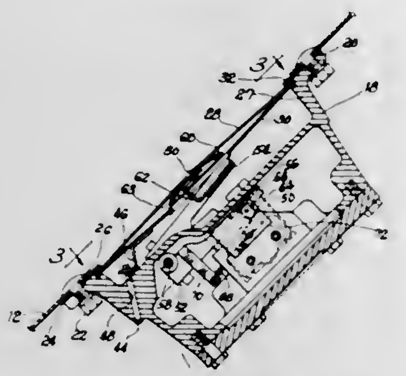

An indicator operable by the weight of material in a bin, said indicator comprising a housing having an open end adapted to be mounted opposite an opening in the bin, a diaphragm mounted across said open end of said housing, a control device mounted in said housing, and means connected between said diaphragm and said control device for transmitting the movement of said diaphragm to said control device, said diaphragm having a plurality of generally radial creases formed therein to render the diaphragm more sensitive to the weight of the material. The indicator preferably comprises a backing plate extending behind said diaphragm, said backing plate having a peripheral flange portion wrapped around the peripheral portion of said diaphragm, and a soft resilient O-ring compressed between said flange and the front of the peripheral portion of said diaphragm.

3,396,695
FLAG-ADJUSTING ASSEMBLY FOR FLAGPOLE
Roy F. Milburn, 1240 Oakmont Road, 52L, Seal Beach, Calif. 90740
Filed Dec. 13, 1966, Ser. No. 601,448
2 Claims. (Cl. 116—173)

The present invention is for an assembly or kit consisting of a looped wire member that can be readily mounted upon the upper end of a conventional flagpole, a companion looped wire member that can be readily attached to the flagpole at a lower point, and a flexible cord that has its two ends secured to the wire members and whose main portion has slidable engagement through the loops of the wire members. This cord has upper and lower doubled-back portions with slidable wire members thereupon for removably holding the flag and for predetermined limited up and down movement corresponding to the positions of full-mast and half-mast so that downward and

upward movements of the middle part of the cord, that extends along the flagpole and is readily accessible to the operator, will automatically effect full-mast and half-mast positions, respectively. This assembly is particularly well adapted for use upon the familiar type of flagpole that is mounted at an angle upon the wall of a building, outside the window.

3,396,696
LENS TURNER FOR HIGH VACUUM EVAPORATORS
Ralph F. Becker, 6820 E. Pinchot Ave., Scottsdale, Ariz. 85251
Filed Oct. 6, 1966, Ser. No. 584,890
2 Claims. (Cl. 118—49)

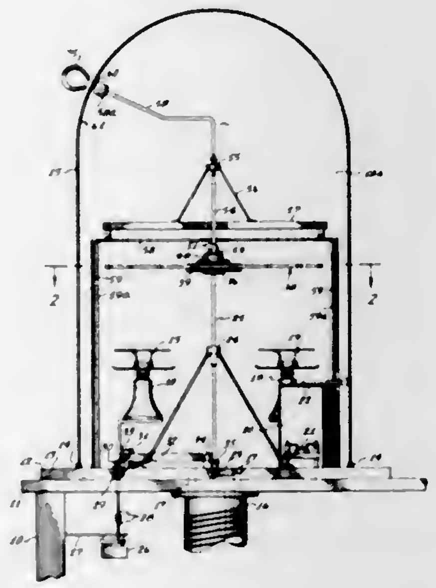

1. In a lens turning apparatus for a high vacuum evaporator machine as set forth in claim 1 wherein said operating device includes a radially disposed arm journalled on said base plate about the axis of said work spindle and demountably connected to said actuating means of item H with said magnetic element at the outer end of said arm swinging around closely adjacent the inside surface of said bell jar when said work spindle is rotating and swingable by applying said magnet to the outside surface of said bell jar when said work spindle is stopped to thereby turn one or the other side of said lenses to operative position.

3,396,697
CORN BUTTERING DEVICE
Carl O. Bieser, 6766 Rollymeade Road, Cincinnati, Ohio 45243
Filed Mar. 1, 1965, Ser. No. 436,226
1 Claim. (Cl. 118—76)

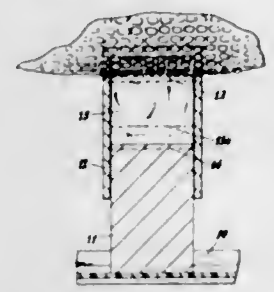

A corn buttering device having a receptacle to underlie an ear of corn, the receptacle having a vertical upstanding ram fixed solidly thereto. There is a sleeve which has a telescoping fit on the ram. The sleeve is designed to just nicely receive a portion, at least, of a stick of butter, the sleeve having one or more members against which the butter abuts. The top surfaces of the ram and sleeve are of a shape corresponding to an ear of corn to be received thereby. The sleeve and butter contained therein are placed over the ram. The device is such that one may place an ear of corn on the sleeve and rotate the ear while drawing it back and forth whereby the heat and weight of the corn, plus any downward pressure exerted by the user, will cause the member or members to sink into the butter and the butter to contact the corn as the ram thus pushes the butter out.

3,396,698
APPARATUS FOR LINING GASKET-FORMING COMPOSITIONS IN CLOSURES
Wayne I. Alholm, Stoughton, Richard C. Boulton, Waltham, and William B. Harrison, Dedham, Mass., assignors to W. R. Grace & Co., Cambridge, Mass., a corporation of Connecticut
Filed Feb. 20, 1967, Ser. No. 617,123
5 Claims. (Cl. 118—318)

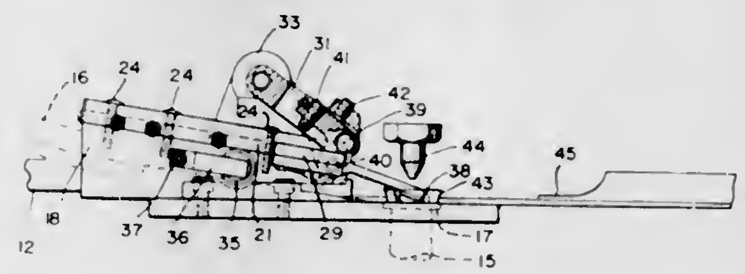

An apparatus for lining container closures with gasket-forming compositions which includes a feeder which moves closures from a closure feed source and positively places the closure at the station where it is lined.

3,396,699
CONTINUOUS COATING APPARATUS
Norman P. Beebe, Ferrysburg, Ivan W. Wade, Jr., Muskegon, and Daniel G. Stone, Grand Rapids, Mich., assignors to Anaconda Wire and Cable Company, a corporation of Delaware
Filed Oct. 21, 1966, Ser. No. 588,511
8 Claims. (Cl. 118—634)

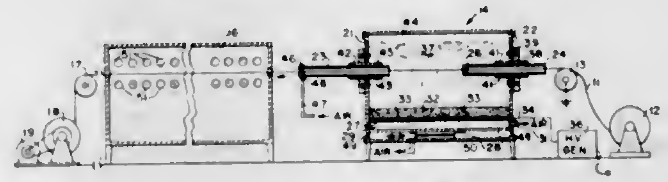

Wire or strip is continuously coated by passing it through a cloud of electrostatically charged particles of enamel maintained above the upper surface of a fluid bed within a covered chamber. The thickness deposited is controlled by adjustable tubes through which the work passes on entering and leaving the chamber and agglomerates of the powder are removed by blowers at the chamber exit. The work passes directly from the chamber through an oven where the enamel is fused.

3,396,700
XEROGRAPHIC TONER DISPENSING APPARATUS
Daniel J. Donalies, Rochester, N.Y., assignor to Xerox Corporation, Rochester, N.Y., a corporation of New York
Filed Aug. 9, 1967, Ser. No. 659,519
10 Claims. (Cl. 118—637)

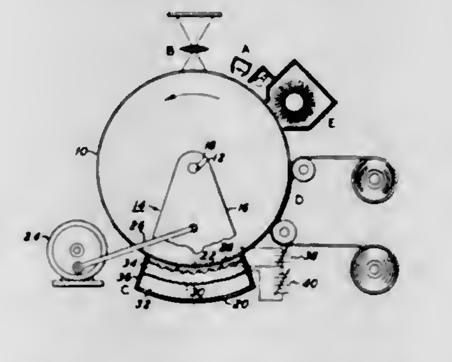

Apparatus for dispensing toner particles to undertoned carrier granules in a xerographic development system, as of the fluidized bed type. A quantity of carrier granules to be toned is passed through a toning zone bounded by a pair of screens, at least one of which is electrically biased. Charged toner particles are held in suspension between the screens as by vibration. The carrier granules to be toned triboelectrically attract and retain toner particles from the toning zone, only up to the point of optimum toner concentration since the electric field within the zone acts as a competing force against which the carrier granules must act in order to attract and retain additional toner particles.

3,396,701
CONTAINER FOR LIVE GNOTOBIOTIC AXENIC ANIMALS
Philip C. Trexler, Wilmington, Mass., assignor to The Charles River Breeding Laboratories, Inc., Wilmington, Mass., a corporation of Massachusetts
Filed Aug. 15, 1966, Ser. No. 572,487
3 Claims. (Cl. 119—15)

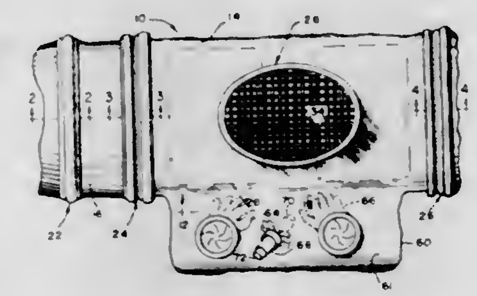

1. An isolation container for live gnotobiotic animals comprising, in combination:
- a sleeve formed of a flexible sheet material impervious to microorganisms;
- a closure in one end of said sleeve including a filter impervious to microorganisms for admitting air to said interior of said sleeve;
- an inner door engaged in closed relation within said sleeve intermediate the ends of said sleeve and co-

operating with said closure to form a chamber for holding said animals, said inner door being air impervious and being movable within said sleeve between open and closed positions;

means exterior of said sleeve for retaining said inner door and said sleeve in sealed relation;

a filter impervious to microorganisms engaged within an opening in the upper portion of said sleeve between said inner door and said closure for exhausting air from said chamber;

an outer door engaged in the other end of said sleeve in closing relation to said sleeve and cooperating with said inner door to provide a second chamber; and

a pair of thin elastomeric gloves projecting into said chamber, writ portions thereof being hermetically connected to said sleeve; and

an elastomeric tube extending through said sleeve into said chamber, a medial portion of said tube being hermetically connected to said sleeve, the thickness of said tube being sufficiently great to normally prevent substantially interference with the passage therethrough by deformation thereof, an inner stopper removably inserted into the inner opening of said tube, and an outer stopper removably inserted into the outer end of said tube;

said inner stopper being accessible to the hands of an operator when received by said gloves.

3,396,702
POULTRY GROWING PROCESS AND APPARATUS
Harry B. Trussell, 609 Stokeswood Ave. SE., Atlanta, Ga. 30316
Filed Aug. 17, 1965, Ser. No. 480,373
5 Claims. (Cl. 119—17)

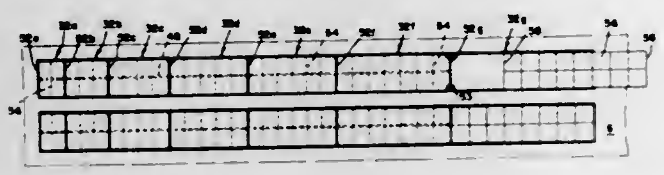

An apparatus for growing livestock comprising an elongated enclosed unit having a plurality of transversely disposed imperforate doors dividing the unit into longitudinally aligned enclosures of increasing size from one end of the unit to the other end with a plurality of removable cages located within the enclosure at the other end of the unit and with the imperforate doors being openable to provide access between one enclosure and the succeeding enclosure thereto.

3,396,703
POULTRY HATCHING APPARATUS
Harry B. Trussell, 609 Stokeswood Ave. SE., Atlanta, Ga. 30316
Filed Aug. 12, 1965, Ser. No. 479,078
4 Claims. (Cl. 119—30)

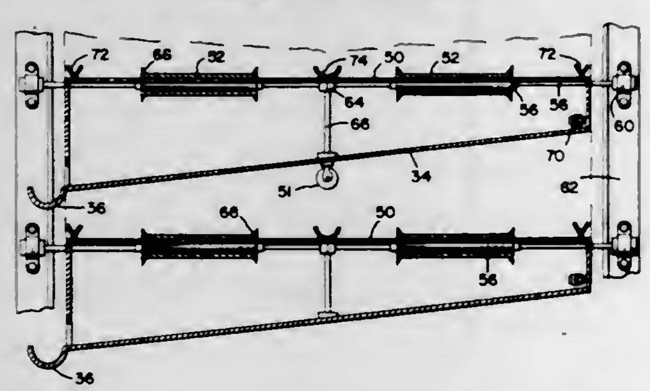

A unit for hatching poultry eggs including an enclosure having a perforate floor over which a conveyor belt narrower than the floor traverses. A perforate floor area is provided on either side of the belt to allow hatched chicks to stand and feed from suitably placed feed and water troughs.

3,396,704
HOT-WATER BROODER UNIT
Hugo F. Hillstrom, Rte. 2, Box 12, Cokato, Minn. 55321
Filed July 8, 1966, Ser. No. 563,732
3 Claims. (Cl. 119—31)

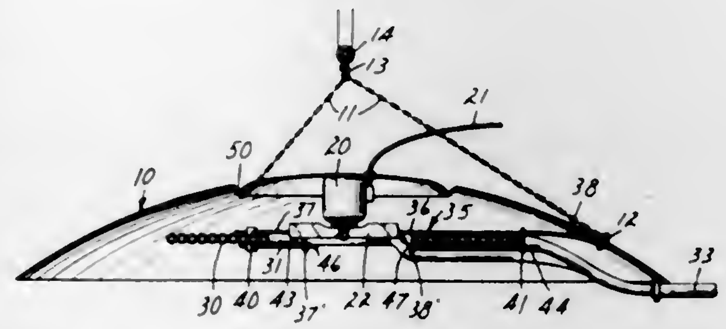

A hover formed generally in the shape of a portion of a hollow sphere with no openings therein having a fan mounted approximately centrally thereunder and a plurality of hot-water coils in a generally helical shape mounted substantially coaxially around the fan. The hover has a downwardly projecting discontinuity integrally formed therein so that air is drawn upwardly in the center of the brooding unit by the fan is deflected generally outwardly and downwardly by the hover across the hot-water coils after which the air circulates back toward the center of the brooding unit and is drawn upwardly again by the fan.

3,396,705
VAPOR GENERATOR
Leo Eickenberg, Ratingen, Germany, assignor to Durrwerke Aktiengesellschaft, Ratingen, Germany, a corporation of Germany
Filed Mar. 4, 1966, Ser. No. 531,987
10 Claims. (Cl. 122—240)

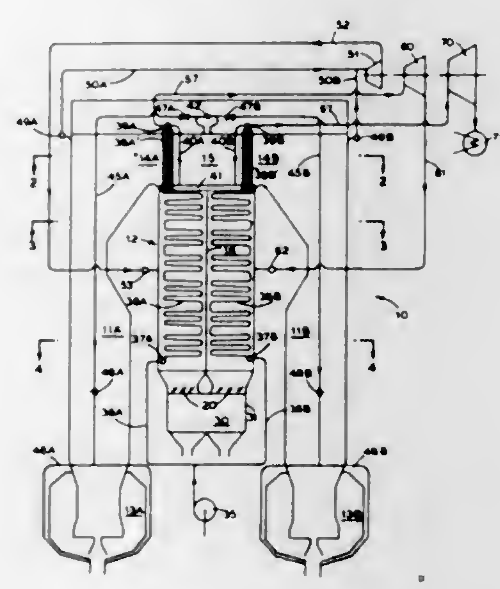

A vapor generator having plural independently operable combustion chambers each having an associated radiation chamber which discharges combustion gases into a common plenum chamber from which the gases are directed to and through a convection pass that is divided into a plurality of parallel-flow convection gas passages provided with individual dampers for regulating the gas flow through each. The heating surface of the vapor generator is so arranged that the combustion and radiation chamber walls are lined with evaporator and high pressure superheater surface, and the convection pass contains economizer and reheater surface sections located within respectively separate gas passages.

3,396,706
BOILER CLEANING CONTROL METHOD
Walker H. Rayburn, Scio, N.Y., assignor to The Air Preheater Company, Inc., Wellsville, N.Y., a corporation of Delaware
Filed Jan. 31, 1967, Ser. No. 613,020
4 Claims. (Cl. 122—379)

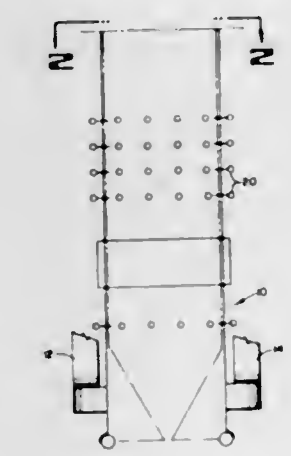

Method of and apparatus for prolonging the life of heat exchangers positioned in boiler exhaust gas streams by means of programming the operation of boiler internal cleaning devices as a function of boiler load and fuel type to thereby simulate continuous cleaning.

3,396,707
GAS PASSES
Roy Bagley and Richard H. Evans, London, England, assignors to Babcock & Wilcox, Limited, London, England, a corporation of Great Britain
Filed Aug. 25, 1966, Ser. No. 575,157
Claims priority, application Great Britain, Aug. 27, 1965, 37,046/65
3 Claims. (Cl. 122—510)

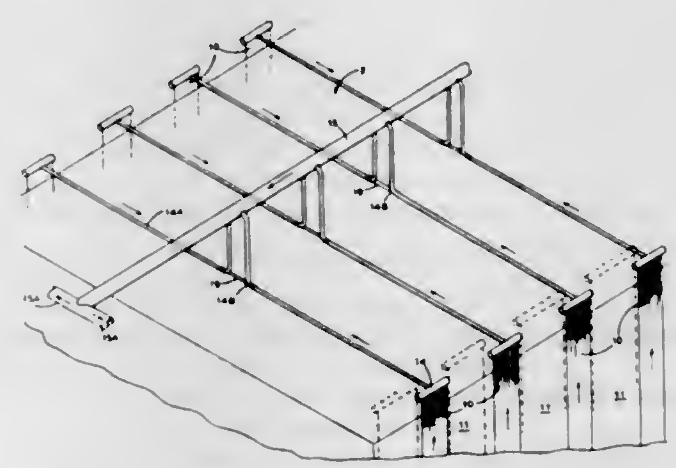

A gas-pass having tubes in the walls thereof where the tubes discharge fluid into headers positioned in the upper portion of the gas-pass walls. The headers in opposite walls are provided with conduits extending across the top of the gas-pass which discharge fluid from the opposite headers into a collector located parallel to and intermediate the headers in opposite walls. The conduits from opposite headers are tied together to resist forces urging the opposite headers apart.

3,396,708
OILTIGHT SEALING DEVICE FOR ROTARY PISTON ENGINES
Hiroshi Tado, Suita-shi, Japan, assignor to Yanmar Diesel Engine Co., Ltd., Osaka, Japan, a corporation of Japan
Filed Mar. 2, 1966, Ser. No. 531,254
Claims priority, application Japan, Mar. 11, 1965, 40/18,653
1 Claim. (Cl. 123—8)

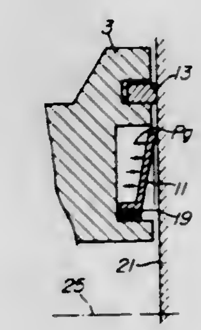

An oiltight and gastight sealing device, for use in rotary piston engines of epitrochoidal profile, consisting of a sealing ring formed of resilient material and mounted on each side of the piston. The ring is shaped and disposed so that gas pressure leaking from the combustion chambers acts on the rear face of the ring to bias it towards the side wall of the housing thus forming a tight seal.

3,396,709
ROTO-PISTON ENGINE
Warren J. Robicheaux, Port Arthur, Tex., assignor to Gulf Oil Corporation, Pittsburgh, Pa., a corporation of Pennsylvania
Filed May 9, 1966, Ser. No. 548,570
9 Claims. (Cl. 123—45)

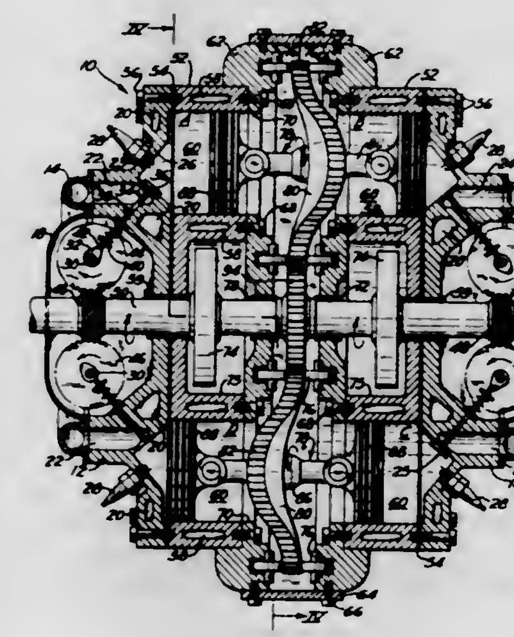

A number of different engines, both four-cycle and two-cycle, which utilize a unitary double opposed pistons and cam wheel member are described. Means are provided to hold the edge of the cam wheel at two locations in the housing. The explosion of the fuel mixture against the face of one piston moves the associated member axially. The axial motion is simultaneously converted

into rotation of the entire member by interaction of the rollers at the edges of the cam wheel.

3,396,710
INJECTION PUMPS
Georges Garnier, Blois, France, assignor to Roto-Diesel, Blois, Loir-et-Cher, France, a company of France
Filed May 2, 1966, Ser. No. 547,004
Claims priority, application France, May 7, 1965, 16,327, Patent 1,444,035
2 Claims. (Cl. 123—139)

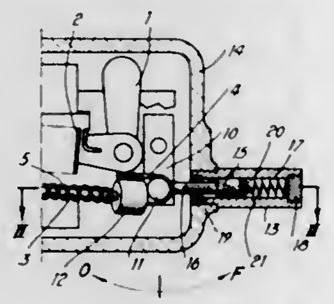

A mechanism for damping movement of the control member which governs the flow of fuel to the inlet passage of an injection pump of an internal combustion engine. The damping becomes operative when the control member is suddenly moved in a direction to increase the flow of fuel.

3,396,711
SPACER DECK FOR ENGINE CYLINDER BLOCK
Charles N. Fangman, Walter R. Gutzwiller, and Clayton C. Johnson, Peoria, Ill., assignors to Caterpillar Tractor Co., Peoria, Ill., a corporation of California
Filed June 20, 1967, Ser. No. 647,492
1 Claim. (Cl. 123—193)

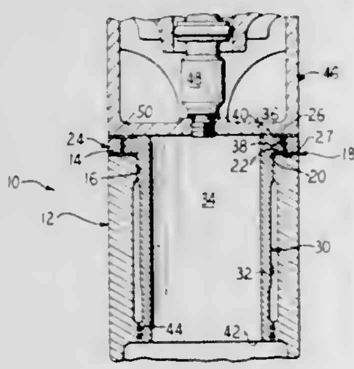

The spacer deck of the invention is formed of a plate securable to the top surface of an engine cylinder block. Extending through the plate are a plurality of circular apertures, positioned respectively for registration with the cylinder bores. Each aperture is of larger diameter than the corresponding bore. Associated with the deck is a sheet of sealing material securable intermediate the deck and the top surface of the block. A portion of the sheet is positionable adjacent each bore for seating a support flange of a cylinder liner projecting within the respective bore. Stresses produced in each cylinder liner are transmitted through the associated support flange and sheet portion, and to the top surface of the cylinder block.

3,396,712
COVER SEAL ARRANGEMENT
Carl R. Sakraida, Naperville, and Thomas N. Pratt, Oak Park, Ill., assignors to General Motors Corporation, Detroit, Mich., a corporation of Delaware
Filed May 29, 1967, Ser. No. 641,886
6 Claims. (Cl. 123—198)

A removable cylinder head cover includes peripheral seal retaining means having a splash lip and a seal retaining groove receiving a resilient seal, the groove and seal being shaped to provide improved sealing ability with

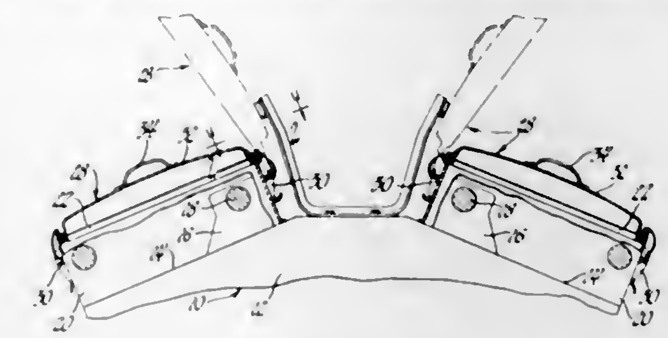

low seal compression combined with good retention of the seal in the groove.

3,396,713
CONCRETE SAW GUIDE AND METHOD OF USE THEREOF
Albert Schuman, 19223 Alisal, Covina, Calif. 91722
Filed Aug. 1, 1966, Ser. No. 569,232
8 Claims. (Cl. 125—14)

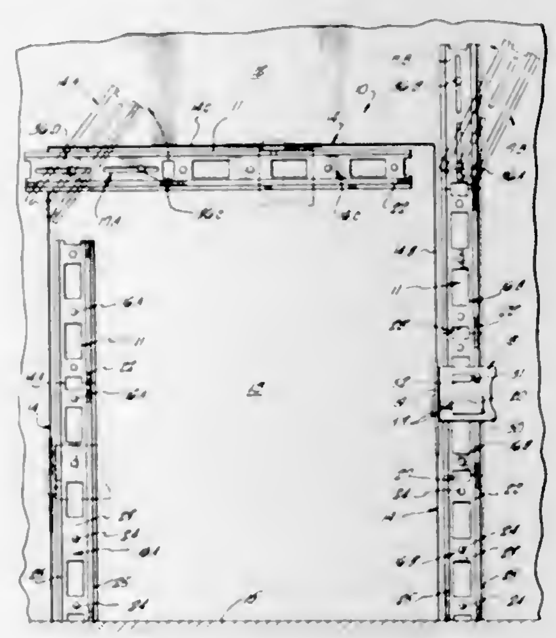

1. A guide structure for a rotary disc concrete saw and the like comprising an elongate base adapted to be mounted to a masonry wall and the like, guide means extending linearly along the base for receiving a concrete saw assembly therealong and for guiding a received saw assembly along a straight line, saw assembly traction means carried by the base for cooperation with a received saw assembly in driving the received saw assembly along said line, and means for swingably mounting the base to a wall and the like in alignment with a desired cut line including slot aperture means through the base in elongate alignment substantially parallel to said straight line.

3,396,714
TENSIONED INTERNAL DIAMETER CUTTING WHEEL ASSEMBLY
Robert L. Lauze, Manhattan Beach, Calif., assignor to Navan Products, Inc.
Continuation-in-part of application Ser. No. 395,494, Sept. 10, 1964. This application Feb. 1, 1965, Ser. No. 431,764
11 Claims. (Cl. 125—15)

1. A holding ring structure for separately gripping and tensioning an internal diameter cutting wheel comprising a female ring having an annular cavity formed in one radial surface defined by an inner annular shoulder and an outer annular shoulder on a different radial plane than the inner annular shuolder, a male ring having an annular plug complementary to said cavity formed on one radial surface with inner and outer annular shoulders on

different radial planes complementary to the inner and outer annular shoulders on said female ring so that when said rings are pressed together with an internal diameter cutting wheel therebetween the outer marginal edge of the wheel is folded into a flange normal to the plane of

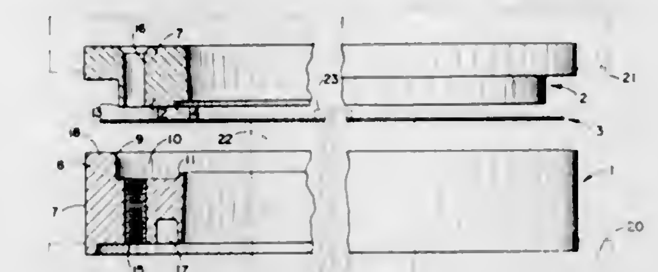

the wheel and securely gripped between the outer shoulders of said female and male rings and upon continued advancement of said plug into said cavity the wheel is radially tensioned between the inner shoulders of said female and male rings.

3,396,715
PORTABLE COMBUSTION DEVICE FOR SOLID FUELS
Chauncey D. Allen, San Mateo, Calif., assignor to Natural Resources Corporation, a corporation of Nevada
Filed Jan. 14, 1966, Ser. No. 520,616
7 Claims. (Cl. 126—25)

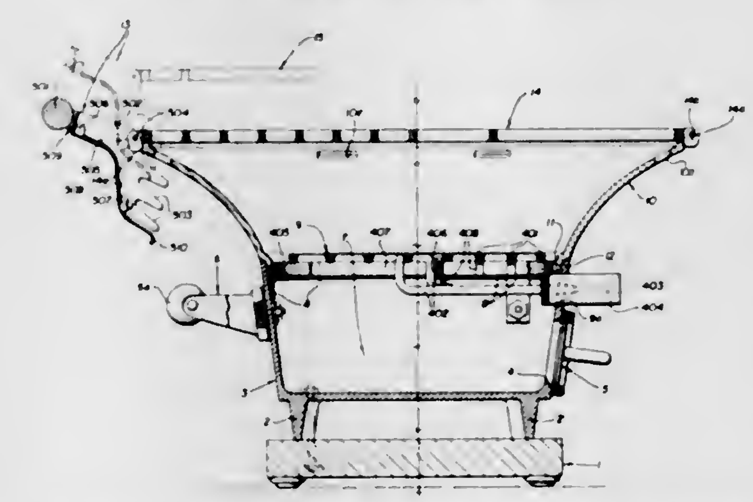

A device for efficient operation of barbecuing and similar operations which makes possible rapid and efficient ignition and combustion of solid fuels. An electric igniter element is so constructed and installed as to act also as a grate for fuel. The device further is constructed to permit rapid assembly, disassembly, and adjustment while hot with complete safety.

3,396,716
COOKING APPLIANCE WITH TILTING GRID
Carl M. Weyland and Robert J. Getz, Quakertown, Pa., assignors to Magikitch'n Equipment Corporation and Quakertown Stove Works, Inc., both of Quakertown, Pa., both corporations of Pennsylvania
Filed May 22, 1967, Ser. No. 640,266
10 Claims. (Cl. 126—41)

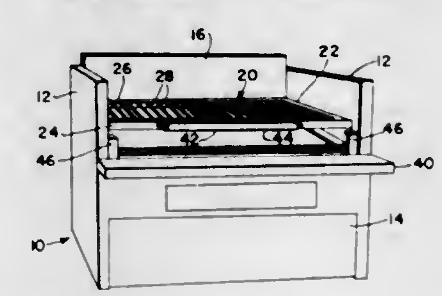

A cooking appliance including a box-like structure containing a heating compartment relative to which a grid is juxtaposed and mounted for disposition in either a level position or in a tilted position.

3,396,717
TRACK SYSTEM FOR SHUTTER OF WINDOWED OVEN DOOR
William K. Winkler, Anchorage, and Eugene E. Pickerrell, Jeffersontown, Ky., assignors to General Electric Company, a corporation of New York
Filed June 7, 1967, Ser. No. 644,257
5 Claims. (Cl. 126—200)

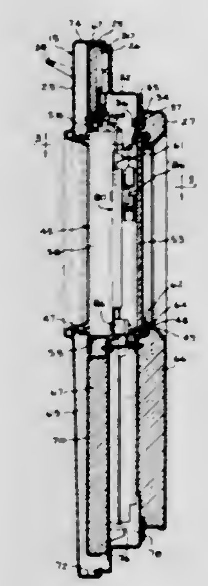

A door for a high temperature oven where there is a transparent window in the door and a manually movable shutter located within the door so that in one position the shutter closes the window and in a second position it is retracted into the door structure. The shutter is supported and guided by a track which cooperates with slide members on the shutter so as to permit freedom of movement of the shutter on the track under high temperature conditions.

3,396,718
FLOOR SUPPORT AND DRAIN FOR AN OIL HEATER
Hubert D. Anderson, Coward, S.C. 29530
Filed June 28, 1966, Ser. No. 561,201
9 Claims. (Cl. 126—278)

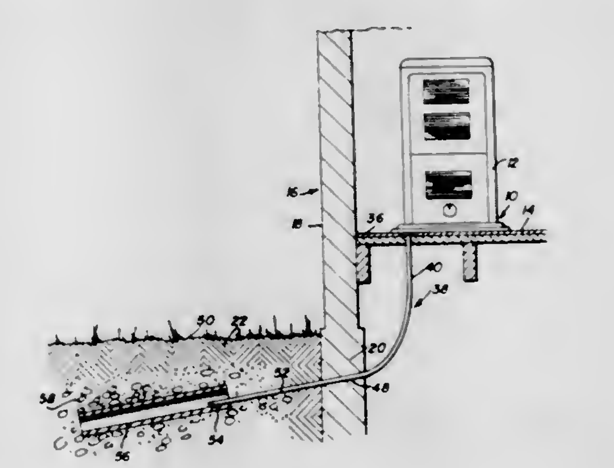

A panel supporting an oil heater or the like on a floor surface having a drain conduit communicated with the upper surface thereof and extending downwardly through the floor and out through the exterior wall to a point of discharge exteriorly of a building to drain any leakage from the oil heater to a point exteriorly of the building to eliminate a fire hazard. The panel includes a peripheral flange and an asbestos pad disposed under the panel

and secured thereto by an inturned clamp structure integral with the periphery of the panel.

3,396,719
METABOLIC RATE METER AND METHOD
Thomas Ivan Taylor, Leonia, and Irving Warren Ruderman, Demarest, N.J., assignors to Isomet Corporation, Palisades Park, N.J., a corporation of New Jersey
Filed July 2, 1963, Ser. No. 292,340
8 Claims. (Cl. 128—2.07)

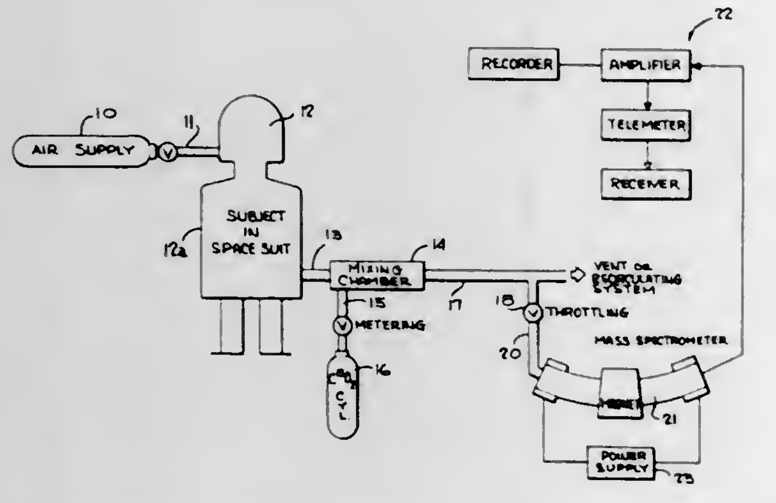

1. Method for the determination of the metabolic rate of humans and animals which comprises the steps of forming a stream of the respiratorial exhalations, introducing carbon[13] labelled carbon dioxide into said stream at a predetermined rate, uniformly admixing said stream and said labelled carbon dioxide, and measuring the ratio of carbon[12] to carbon[13] in said mixture by mass spectrometry.

3,396,720
COSMETIC MASSAGE DEVICE
Shigeyuki Ohkubo, 428 Kamiodanaka, Kawasaki-shi, Japan
Filed Oct. 15, 1965, Ser. No. 496,360
Claims priority, application Japan, Oct. 30, 1964, 39/84,484
4 Claims. (Cl. 128—40)

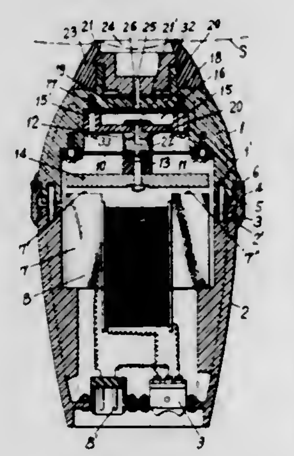

A cosmetic massage device has upper and lower casings which are connected by an adjusting ring. An iron core with a coil is in the lower casing cooperating with an armature connected to an elastic plate secured in the upper casing. Movement of the armature causes expansion and contraction of an air chamber with suction and exhaust valves. The air chamber is connected to a vacuum chamber surrounded by an elastic element for contacting the skin. Operation of the coil by A.C. causes vibration of the armature and suction within the vacuum chamber to remove dirt, dust and other substances from the pores of the skin by vacuum.

3,396,721
PROCESS TO STIMULATE THE PERISTALTIC MOVEMENTS AND DEVICE THEREFOR
Samuel A. Mencacci, 30 Aharnenlaan, Wilrijk, Antwerp, Belgium
Filed Feb. 19, 1965, Ser. No. 433,996
Claims priority, application Belgium, Mar 4, 1964, 644,660
4 Claims. (Cl. 128—41)

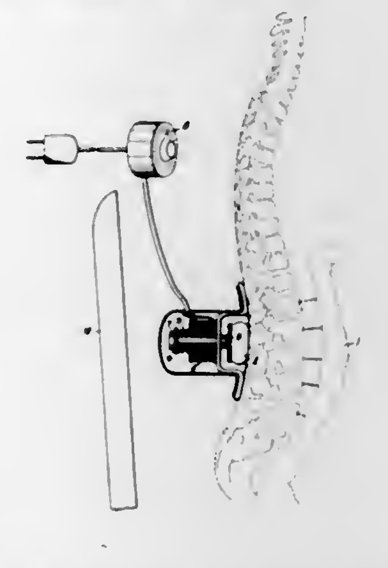

The peristaltic movements of the descending colon of a human being are stimulated by exciting the 1–5 lumbars with a frequency substantially equal to the normal frequency of contraction, namely between 5 to 15 impulses per minute by means of an impact head and its actuating device including a solenoid. The impact head may be a cushion or a bladder filled with a fluid. The device may be carried by a belt or may be mounted in the cover of a toilet seat.

3,396,722
COMBINED AERATION AND HYDROTHERAPY APPARATUS
Albert W. Lindberg, Jr., 126 W. 6th St., Bayonne, N.J. 07002
Filed Oct. 4, 1965, Ser. No. 492,401
5 Claims. (Cl. 128—66)

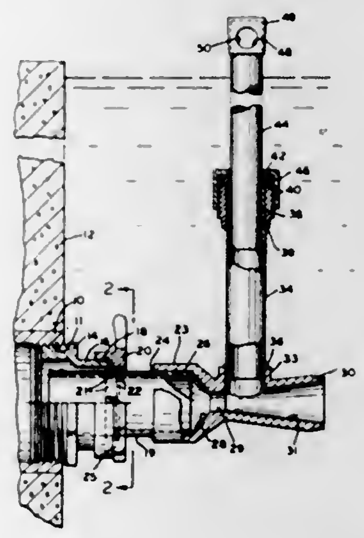

Combined aeration and hydrotherapy apparatus for pools having a source of water leading into an inlet in the pool at a distance below its highest water level having an adapter for attachment to said inlet, an expansion venturi tube connected at one end with the adapter and a vertical tube extending from the adapter to a point above the water level of the pool. The opposite end of the venturi tube can be closed with a removable cap whereby the water entering the adapter tube flows through the vertical tube or the cap can be removed from the venturi tube whereby the water entering the adapter tube flows out the other end of the venturi tube along with

air which is drawn into the venturi tube through the vertical tube.

3,396,723
BREATHING APPARATUS WITH PERIODIC VOLUME CHANGE
Klaus Freytag, Lubeck, Germany, assignor to Otto Heinrich Drager, Lubeck, Germany
Filed Mar. 17, 1966, Ser. No. 535,233
Claims priority, application Germany, Mar. 20, 1965, D 46,854
4 Claims. (Cl. 128—145.6)

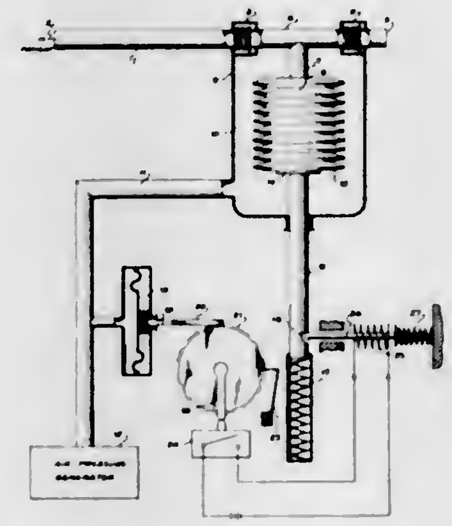

1. A breathing apparatus comprising a housing, a breathing bag in said housing, pressure means for putting said bag under greater than or less than atmospheric pressure to expand or contract said bag, movable stop means for limiting the normal maximum expansion of said bag, pressure counting means for releasing said stop means after a predetermined number of greater than atmospheric pressures applied to said bag so that said bag is expanded to more than said maximum expansion during a following less than atmospheric pressure on said bag, and means for communicating said bag with a patient so that a deep breath is periodically forced into the lungs of the patient.

3,396,724
BREATHING APPARATUS WITH PERIODIC VOLUME CHANGE
Klaus Freytag, Lubeck, Germany, assignor to Otto H. Drager, Lubeck, Germany
Filed Apr. 25, 1966, Ser. No. 544,789
Claims priority, application Germany, May 8, 1965, D 47,204
5 Claims. (Cl. 128—145.6)

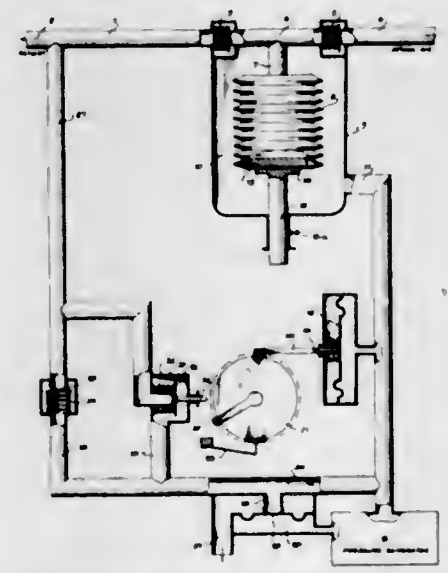

1. A breathing apparatus comprising a housing, a breathing bag in said housing, pressure means for putting said bag under greater than or less than atmospheric pressure to expand or contract said bag, first tube means joined to said bag for supplying air to a patient, second tube means joined to said first tube means for removing air exhaled by the patient, first exhaust valve means in said second tube means in normally opened position for the release of exhaled air, pressure counting means engageable with said first exhaust valve means for closing said first exhaust valve means after a predetermined number of greater than atmospheric pressures applied to said bag, and second exhaust valve means in said second tube means having a greater resistance to opening than said first exhaust valve means for releasing a portion only of the air being exhaled by the patient.

3,396,725
RESPIRATOR WITH NEGATIVE PRESSURE LIMITING VALVE
Peter Schreiber, Lubeck, Germany, assignor to Otto Heinrich Drager, Lubeck, Germany
Filed Jan. 11, 1965, Ser. No. 424,508
Claims priority, application Germany, Jan. 17, 1964, D 43,368
3 Claims. (Cl. 128—145.8)

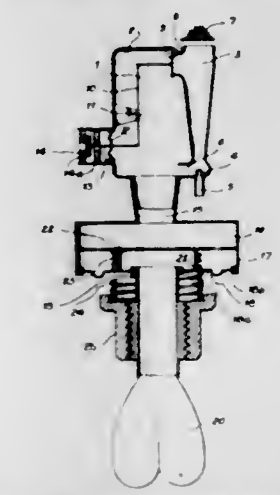

A shut-off valve is mounted in the breathing tube of a respirator for stopping the gas flow through the tube when the gas pressure in the tube falls below a given value.

3,396,726
HYPODERMIC SYRINGE AND CARTRIDGE FOR USE THEREWITH
Stanley J. Sarnoff, 7507 Hampden Lane, Bethesda, Md. 20014
Continuation of application Ser. No. 379,694, July 1, 1964. This application Jan. 25, 1968, Ser. No. 703,517
6 Claims. (Cl. 128—218)

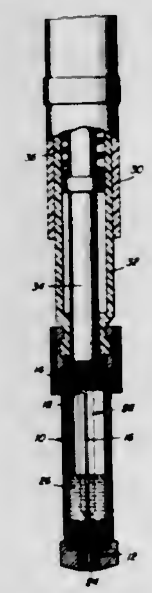

A cartridge is comprised of a cylinder, a stopper at the front end thereof, a plunger at the rear end thereof,

a hypodermic needle within the cartridge extending from the piston to the stopper with an opening to the needle at the end thereof adjacent the piston and a liquid within the cartridge only partially filling the cartridge, the remainder of the cartridge being occupied by air of such a column height as to allow full emergence of the needle from the stopper prior to ejection of liquid from the needle. This cartridge is utilized with a type of holder wherein a plunger under influence of a stressed spring applies a force to the piston when it is released to the action of the spring.

3,396,727
DRAINAGE TUBE FOR BODY FLUIDS PROVIDED WITH FILTERING MEANS COATED WITH BACTERIAL PREVENTIVE MATERIAL
Keith B. Mount, New Providence, N.J., assignor of fifty percent to Albert C. Nolte, Jr., New York, N.Y.
Filed Jan. 6, 1964, Ser. No. 335,943
5 Claims. (Cl. 128—349)

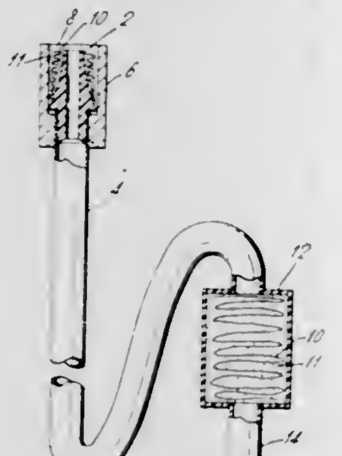

1. A drainage tube for use in draining body fluids comprising, in combination, a tube, a hollow plug adapted to one end of said tube and having its external surface formed so as to receive a catheter tube, a guard externally disposed around said plug and having sides laterally spaced from said plug, said space being filled with a substance coated with a bactericidal preventive material, a filtering bag connecting the end of said drainage tube remote from said plug, said filtering bag being filled with a substance coated with Oligodynamic Silver.

3,396,728
LONG-LINE BRASSIERE
Charles M. Sachs, Teaneck, and Edward E. Astor, Fort Lee, N.J., assignors to International Latex Corporation, Playtex Park, Dover, Del., a corporation of Delaware
Filed Apr. 11, 1966, Ser. No. 541,668
11 Claims. (Cl. 128—427)

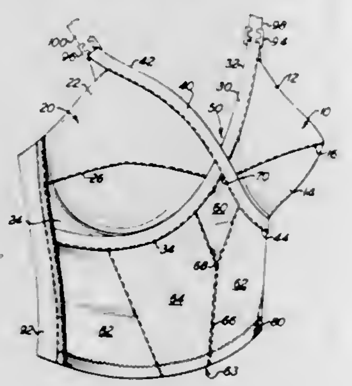

1. In a long-line brassiere of the type having a front section, rear panels, and rear closure means with a dorsal band arrangement and shoulder straps each respectively secured thereto for permitting brassiere accommodation to chest cavity expansion and contraction and for supporting and controlling the center abdominal region of the wearer, said front section comprising:

(a) two cups;
(b) an underbust section including a generally, diamond-shaped, center gusset, a center panel and a pair of side panels; wherein
(c) said center panel has a generally, V-shaped indentation at the upper center thereof; and wherein
(d) said gusset is secured along its upper edges to the lower-inner edges of said cups and along its lower edges to the edges of said indentation; and wherein
(e) said cups are respectively secured along their inner edges to the upper edges of said center panel and to the upper edge of their corresponding side panel; and wherein
(f) said side sections are respectively secured along their outer edges to the inner edges of said rear panels and respectively secured along their inner edges to the outer edges of said center panel; and wherein
(g) the lower edges of said center panel, rear panels, and side sections form the lower edge of the brassiere; and whereby
(h) girthwise expansion of the chest cavity of the wearer produces a girthwise stretch within the brassiere and permits said brassiere to accommodate to said expansions and to maintain its proper position on the body during use; and whereby
(i) said center gusset, center panel and side panels of said front section provide support and control of the center abdominal region of the wearer.

3,396,729
BRASSIERE
Jack Glick, Fort Lee, N.J., assignor to Secret Charm Bra, Inc., New York, N.Y., a corporation of New York
Filed Feb. 28, 1966, Ser. No. 530,714
4 Claims. (Cl. 128—489)

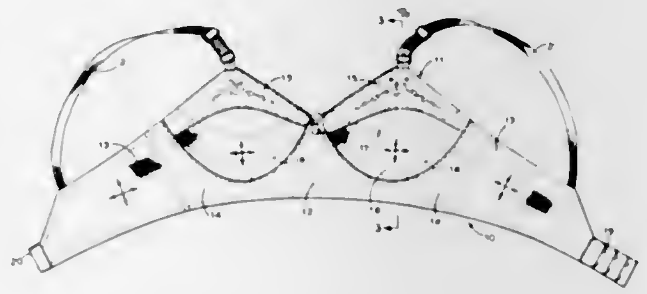

A type of brassiere that takes care of several grade sizes and more than one cup size because of the stretchability of the fabric used and has an interior cup support in addition to an inner cup support to better lift and support the breasts and accommodate the changes in the size of the breast.

3,396,730
SURGICAL GIRDLE
Theodore A. Fox, Winnetka, Ill., assignor to Sears, Roebuck and Co., Chicago, Ill., a corporation of New York
Continuation-in-part of application Ser. No. 507,757, Nov. 15, 1965. This application Nov. 15, 1967, Ser. No. 683,301
5 Claims. (Cl. 128—548)

A girdle intended primarily for therapeutic effect to prevent and to relieve back pain, along with improvement of posture and appearance, comprising a back portion having two series of elastic bands crossing in X-

formation over the small of the back and one or more elastic bands extending under and uplifting the lower buttocks, and a front portion having a firm but resilient

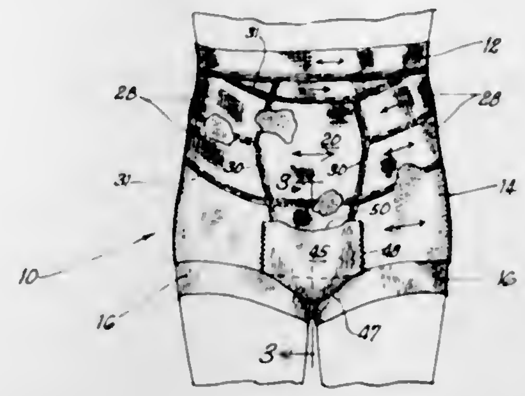

mid-abdominal panel and elastic bands extending at a slight angle downwardly from the sides to join said panel, to exert firm but yieldable support to the abdomen.

3,396,731
DEVICE FOR SUPPORTING FILES VISIBLY
David Meade Peebles, 325 Marcy Ave., Oxon Hill, Md. 20021
Filed Dec. 9, 1966, Ser. No. 600,475
5 Claims. (Cl. 129—16)

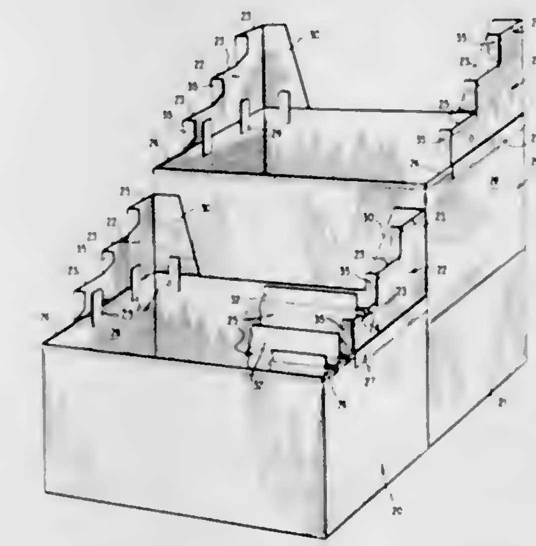

Open top filing boxes have stepped side wall extensions for the support of groups of suspension type files at distinctly different elevations, enabling the index tab of each file to be viewed from a remote point.

3,396,732
INFORMATION STORAGE AND RETRIEVAL APPARATUS
John E. Morse and William C. Thomas, Rochester, N.Y., assignors to Eastman Kodak Company, Rochester, N.Y., a corporation of New Jersey
Continuation of application Ser. No. 406,499, Oct. 26, 1967. This application Aug. 11, 1967, Ser. No. 660,140
1 Claim. (Cl. 129—16.1)

An apparataus for retrieving preselected information elements of the type which are substantially rectangular and have identifying notch and land configurations on opposite longitudinal edges thereof, form a stacked arrangement of similar, vertically suspended elements. The apparatus includes a first pair of opposed movable bars which suspend the arrangement in a first position and a control mechanism which transfers suspension of the arrangement to a predetermined combination of other bars so that the preselected elements move downward to a second suspended position and the remainder of the arrangement remains in the first position. Thereafter, the control mechanism returns suspension of the arrangement to the first pair of opposed bars and the preselected

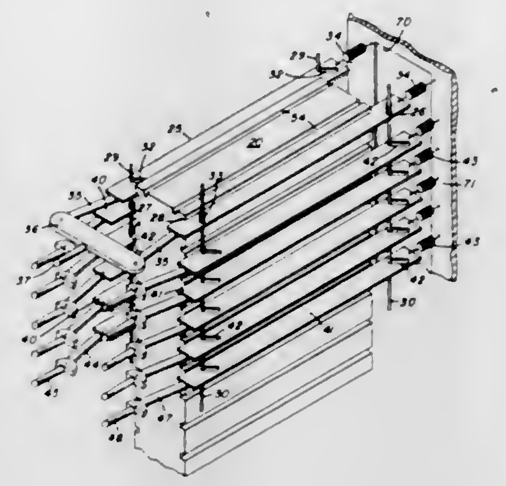

elements, which have moved to the second suspended position, fall from the arrangement.

3,396,733
CIGARETTE TIP
Frank Allseits, Mount Prospect, and Jay Doblin, Chicago, Ill., assignors to P. Lorillard Company, New York, N.Y., a corporation of New Jersey
Continuation-in-part of application Ser. No. 519,780, Jan. 10, 1966. This application Mar. 23, 1966, Ser. No. 536,671
11 Claims. (Cl. 131—10.5)

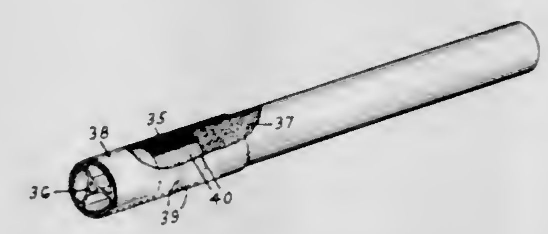

A smoking article comprising a cigarette, an extruded plastic tip, and preferably, a filter and tiny perforations for admitting air to the smoker's mouth with the smoke. The plastic tip includes a cylindrical tubular body portion having a diameter substantially equal to the diameter of the cigarette, a plurality of substantially radially disposed supporting ribs extending longitudinally of and coextensively with the body, and a yieldable, hollow inner element also extending longitudinally of and coextensively with the body. The radial ribs are joined to the body and to the hollow inner element along joints spaced about the peripheries of the body and element, and the body, ribs and inner element constitute an integrally formed, one-piece structure.

3,396,734
MACHINE FOR PRODUCING TOBACCO PRODUCT FROM A FLUID TOBACCO PULP
Carl Ragnar Jansson, Solna, Sweden, assignor to Arenco Aktiebolag, Vallingby, Sweden
Filed Mar. 12, 1965, Ser. No. 439,244
Claims priority, application Sweden, Mar. 31, 1964, 3,957/64
3 Claims. (Cl. 131—133)

A machine for producing a web shaped tobacco product, comprising a moving endless belt. A container having a closed top and a small bottom discharge gap formed by a rotating casting roll and a wiper device above said belt. Means for supplying tobacco pulp to said container and means for maintaining the tobacco pulp at a constant

level in said container. A pressure source for gas, a gas supply tube opening out above the tobacco pulp level,

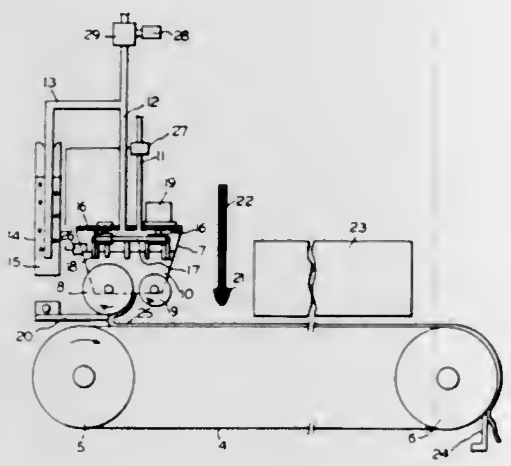

and a pressure regulator, for maintaining a constant gas pressure above said tobacco pulp level.

3,396,735
CONTINUOUS PROCESS OF REMOVING NICOTINE FROM TOBACCO
Max Freiherr Von Bethmann, and Gerhard Lipp, Bremen, and Helmut Bayer, Muhlheim (Main), Germany, assignors to Eresta Warenhandelsgesellschaft mit beschrankter Haftung, Mulheim (Main), Germany
Filed Apr. 13, 1966, Ser. No. 542,342
Claims priority, application Germany, Apr. 15, 1965, E 29,126
18 Claims. (Cl. 131—143)

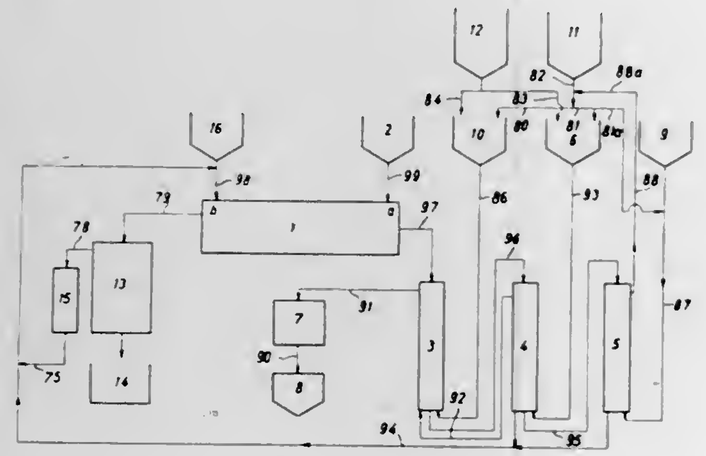

1. A continuous process of removing nicotine from tobacco which comprises:

(a) moving tobacco and an organic solvent in counter flow relation along the same flow path, said organic solvent being capable of dissolving nicotine and exhibiting poor miscibility with water, whereby a nicotine-containing solution is obtained;

(b) extracting the nicotine-containing solution in counter flow relation with an acidic aqueous solution having a pH value of below 2.5, whereby nicotine passes from the organic solvent phase to the aqueous solution;

(c) recycling thereafter the organic solvent for extraction of a fresh amount of nicotine from tobacco;

(d) withdrawing a portion of the aqueous solution when the nicotine content therein has reached a value of at least 5.0% by weight; and

(e) replacing the withdrawn portion of aqueous solution with a fresh amount of acidic aqueous solution having an acidity sufficient to maintain the pH in the aqueous solution at a value below 2.5.

3,396,736
FIBER REACTIVE DYESTUFF COMPOSITION AND METHODS OF DYEING HUMAN HAIR THEREWITH
Albert Shansky, Norwalk, Conn., assignor to Turner Hall Corporation, New York, N.Y., a corporation of New York
No Drawing. Continuation-in-part of application Ser. No. 96,083, Mar. 16, 1961. This application Jan. 13, 1967, Ser. No. 608,973
13 Claims. (Cl. 132—7)

Permanently dyeing hair on the human head by reducing the disulfide linkages of the cystine in the hair keratin to sulfhydryl groups with compounds such as thioglycolic acid, thiolactic acid, thiogylcerol, mercaptopropionic acid, sodium bisulfite, ammonium bisulfide, zinc formaldehyde sulfoxylate, sodium formaldehyde sulfoxylate, sodium metabisulfite, potassium borohydride, hydroquinone and other cystine bond breaking agents listed in USLP 2,577,-710, while breaking hydrogen bonds of the hair keratin with compound such as lithium bromide, urea, resorcinol, catechol, dihydroxyacetone, formamide, potassium chloride and magnesium chloride in an alkaline aqueous solution, and bonding water soluble fiber reactive dyestuffs such as monochlorotriazines, dichlorotriazines, trichloropyrimidines and vinyl sulfones to such sulfhydryl groups through alkylation from an aqueous solution of such dyestuffs.

3,396,737
COUNTING MACHINE ADJUSTABLE FOR COINS OF DIFFERENT DIAMETERS
Giacomo Picollo, Capriata d'Orba, Alessandria, Italy
Filed May 19, 1966, Ser. No. 551,382
Claims priority, application Italy, Mar. 17, 1966, Patent 762,523
14 Claims. (Cl. 133—3)

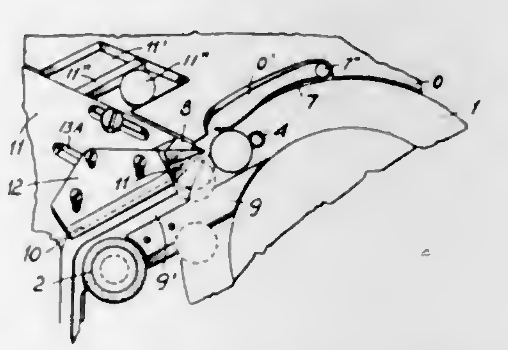

A coin counting machine arranged with a coin trackway adjustable to a number of different coin widths. The operating surface of the machine is disposed at an angle to the horizontal and contains a rotatable dish which feeds coins into the trackway. Coins of a greater diameter than the coin size being counted are prevented from entering the trackway while coins of a smaller diameter are displaced from the trackway before completing passage therethrough. Additionally, an adjustable plate having an edge aligned above and along the trackway provides means for limiting the thickness of coins permitted to pass through the trackway. Further, means are associated with the dish for directing coins toward the trackway. A wheel is provided in the trackway for driving coins into engagement with a coin counting mechanism and then into a special receptacle.

3,396,738
FLUID GUIDING METHOD AND APPARATUS
Gunnar Heskestad, East Brunswick, N.J., assignor to American Standard Inc., a corporation of Delaware
Filed Nov. 27, 1964, Ser. No. 420,241
21 Claims. (Cl. 137—13)

Fluid is smoothly deflected around a step discontinuity in a fluid channel. There are essentially two ways in which

a smooth deflection is accomplished. In the downstream section of the channel just beyond the discontinuity, there are suction means for removing a portion of the fluid. The suction means can be applied to an opening in the

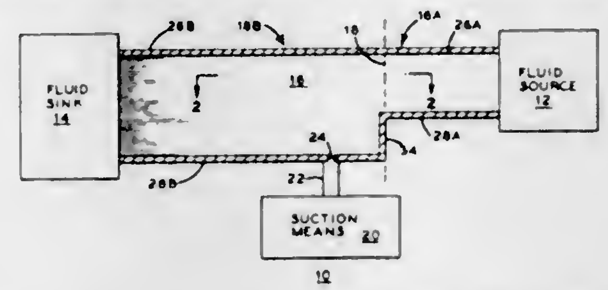

side wall of the channel to remove fluid from the core of a vortex, or applied to a transverse slot in the bottom wall of the channel to remove fluid as it enters the vortex. In the second way, fluid is removed from the flow at the peripheral edge of the step discontinuity.

3,396,739
EMERGENCY VALVE RESPONSIVE TO IMPACT, JARRING OR HEAT
Lester P. Rosell, Dayton, Ohio, assignor to Emco Wheaton, Inc., Dayton, Ohio, a corporation of Ohio
Filed Apr. 15, 1966, Ser. No. 542,790
7 Claims. (Cl. 137—39)

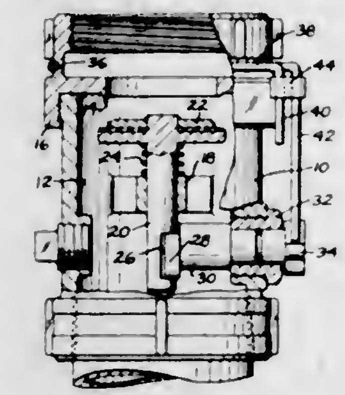

An emergency valve having a flow passage therethrough with a seat and a valve member for engaging the seat. The valve member is biased toward the seat and is normally held in spaced relation with the seat by a mechanism which is sensitive to certain emergency conditions for releasing the valve member so it will close on the seat. The emergency conditions under which the valve member will be released to close on its seat include high temperature and impact, and may also include stress exerted on the valve body.

3,396,740
VALVE APPARATUS RESPONSIVE TO FLUID FLOW
Harold J. Olson, Broadway, Raynham, Mass. 02767
Filed Apr. 15, 1965, Ser. No. 448,460
7 Claims. (Cl. 137—87)

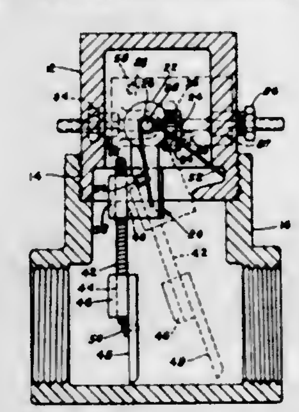

Valve apparatus is operable by flow of fluid to control the speed of a motor during a pumping operation. A flap is actuated by said liquid flow and is operably connected to rotate a shaft, which actuates an air valve to open an air passage to establish a vacuum line adapted to communicate with a vacuum of an automobile motor whereby speed of the latter is controlled.

3,396,741
SWITCHING VALVE FOR FLUID SYSTEM
Max Otto Wintterlin, Lohr (Main), and Fritz Ostwald, Buchschlag, Germany, and Dezsö Varga, Leamington Spa, England, assignors to Alfred Teves KG, Frankfurt am Main, Germany, a corporation of Germany
Filed Mar. 22, 1965, Ser. No. 444,505
Claims priority, application Germany, Dec. 17, 1963, T 25,277
10 Claims. (Cl. 137—115)

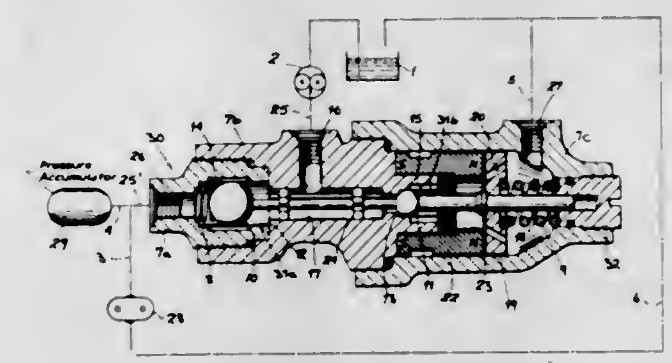

A switch valve for alternately connecting a hydraulic supply line from a pump to a pressure accumulator and another outlet wherein a pair of valve balls are connected by a rigid link for joint movement and are alternately engageable with respective seats between which the supply line opens, the balls being of different effective areas. The accumulator is connected with the seat of a large-diameter ball while the other outlet is provided with the seat engageable by the small-diameter ball. Magnetic and spring biasing means urges the balls into a first position in which the large-diameter ball engages its seat and exerts thereon a force which decreases toward a minimum value upon incipient displacement of the balls from this first position into a second position in which the second or small-diameter seat is unblocked. The large-diameter ball in the limiting second position forms a check valve from the accumulator.

3,396,742
FLAT-SIDED STREAM FLOW VALVE
Ralph A. Beck, Beloit, Wis., assignor to Beloit Corporation, Beloit, Wis., a corporation of Wisconsin
Filed Oct. 23, 1965, Ser. No. 503,019
9 Claims. (Cl. 137—219)

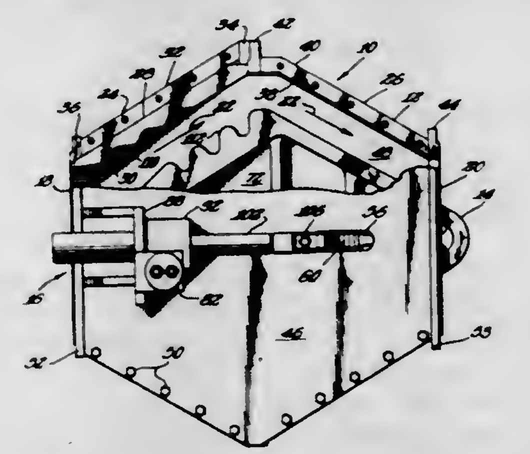

Flat stream flow valve for paper stock and the like in which the valve and valve housing are generally rectangular in cross-section. The valve is in the form of a plug valve having parallel sides sealed to opposite sides of the valve housing and having end walls converging from the

center of the valve to opposite ends of the valve. An operator for the valve extends through one of the side walls of the valve housing and is out of the flow of fluid through the housing. The valve housing has aligned open ends, one of which may form an inlet and the other of which may form an outlet. Valve seats converge from the center of the housing to opposite open ends of the housing. The valve seats converging to one open end of the valve housing are of a stepped form while the valve seats at the other open end of the valve housing are plain. The end walls of the valve conform generally to the stepped and plain valve seats.

3,396,743
ORAL INFLATION VALVE
Henry H. Mackal, Fort Lauderdale, Fla., and Armen Bogossian, Teaneck, N.J., assignors to Halkey-Roberts Corporation, Paramus, N.J., a corporation of New Jersey
Filed Dec. 16, 1965, Ser. No. 514,351
14 Claims. (Cl. 137—223)

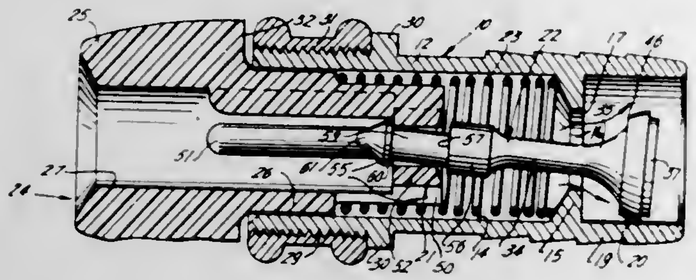

A fluid check valve, such valve being useful, for example, in the inflation and deflation of hollow articles such as life vests, life rafts, and the like. The valve has a body with a longitudinal passage therein, a transverse annular valve seat in the body disposed about the passage transversely thereto, and an inner valve element mounted in the passage for reciprocation longitudinally thereof between a forward, valve-open position and a rearward, valve-closed position. The valve element has an elongated stem which projects rearwardly and generally axially through the first valve seat, and a second valve seat disposed on the stem of the valve element forwardly of the first valve seat. A tubular fluid conducting member is reciprocably mounted within the rear end of the passage in the valve body, the rear end of the stem of the valve element being pivotally connected to the forward end of the tubular member, whereby the tubular member guides the rear end of the stem axially of the passage in the valve body while permitting the forward end of the stem and the second valve seat to tip out of the axis of such passage when the valve element is in open position.

3,396,744
SYSTEM FOR ELIMINATION OF CONDENSATION IN FUEL STORAGE TANKS
Leo L. Schwarz, Crescent Place, Stepney, Conn.
Filed Dec. 6, 1962, Ser. No. 242,791
16 Claims. (Cl. 137—246.23)

1. In a system for storing fuel oil that is adapted to be fed to a point of use, comprising in combination, a fuel storage tank; a filling pipe connected to said tank; supply line means leading from said tank to a location of use; a vent pipe connected to said tank; a valve within said vent pipe responsive to slight positive pressure causing it to open and to vent said tank to atmosphere; an air supply line connected to said vent pipe ahead of said valve; check valve means within said air supply line responsive to slight positive pressure to close, and slight negative pressure to open, the entrance to said air supply line being supplied with conditioned air; removable plug means within said filling pipe adapted to block communication between the interior of said tank and said filling pipe at the point at which said filling pipe is connected

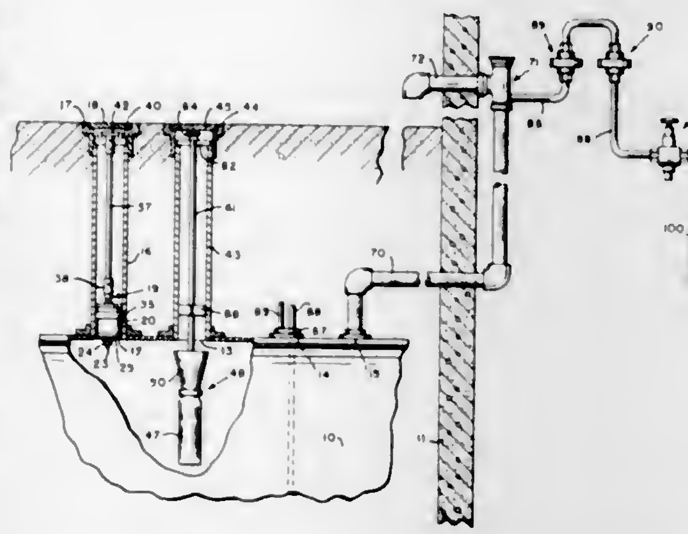

to said tank; and means forming part of said plug means for collecting any water that leaks into said filling pipe above said plug means.

3,396,745
APPARATUS FOR COMMUNICATING SERVICE LINES TO MAINS
Marcus L. Bates, 6904 N. Russell Ave., Odessa, Tex. 79760
Filed Mar. 6, 1967, Ser. No. 620,738
9 Claims. (Cl. 137—317)

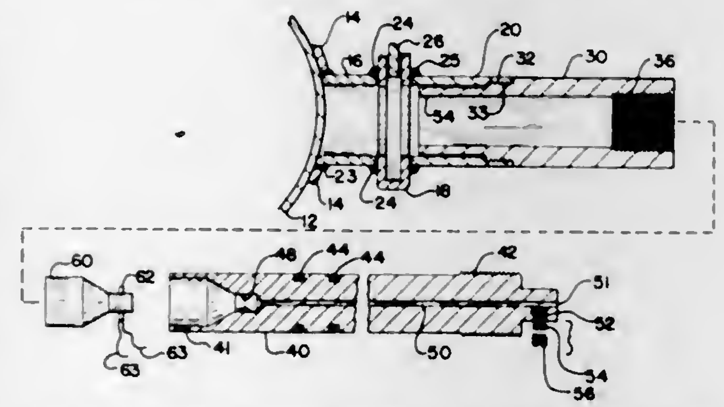

A device for facilitating the act of connecting a service line to a flowing main line. A gate type valve is rigidly attached to the main line and a barrel is removably affixed to the valve and is adapted to cooperate with a mandrel which includes a shaped charge at one extremity thereof. The mandrel cooperates with the barrel to enable the shaped charge to be positioned adjacent the main line, whereupon the explosive shaped charge perforates the main line when a detonator is activated. The mandrel is retrieved along with the barrel to enable further use of the device. The invention also comprehends a mandrel that can be affixed between the gate valve and the flowing main line by including a recoil device in conjunction therewith. The invention further includes a shaped charge that is adapted to be fabricated into the ball member of a ball type valve.

3,396,746
VALVE CONSTRUCTION AND CONTROL FOR POWDER FEED
Elwin A. Hawk, Sr., East Rochester, Ohio, assignor to Coast Metals, Inc., Little Ferry, N.J., a corporation of Delaware
Filed Apr. 18, 1966, Ser. No. 543,264
13 Claims. (Cl. 137—329.05)

This specification discloses a valve construction for controlling a powder feed. A valve element is located in a

housing and extends under a discharge outlet from which the powder drops. The valve element has a rigid core and a resilient covering. The covered portion of the valve element extends through a wall of a passage or chamber in which the powder feed is located. The covered portion of the valve element fits snugly in the opening through the wall and the valve element is supported from the wall of

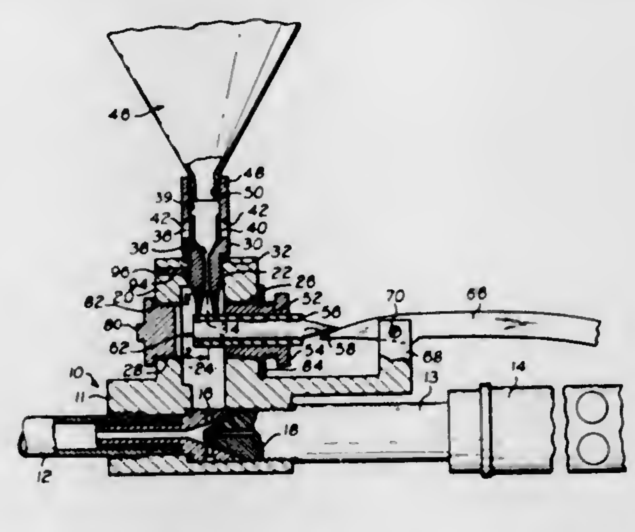

the housing entirely by the resilient covering. The elasticity of the covering holds the valve element normally against the powder feed to prevent powder flow. A portion of the valve element extending outside of the housing is displaced, with resulting compression of the resilient covering which provides a fulcrum for moving the other end of the valve element away from the powder feed to permit powder flow.

3,396,747
FLUID HANDLING APPARATUS INCLUDING A REEL
Warren T. Moore, Houston, Tex., assignor to Brown & Root, Inc., Houston, Tex., a corporation of Texas
Filed Apr. 27, 1966, Ser. No. 545,656
15 Claims. (Cl. 137—355.21)

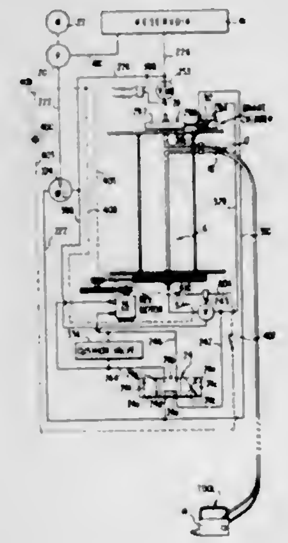

1. A fluid handling apparatus for supplying fluid under pressure to a fluid pressure operated tool, said fluid handling apparatus comprising:

a source of liquid under pressure, adapted to supply fluid under pressure to the tool,

flexible, elongate delivery hose means in fluid communication with said tool for directing fluid thereto,

a rotatable reel on which said delivery hose means may be wound,

fluid inlet means connected with said reel in fluid communication with said delivery hose means for directing fluid thereto,

reversible, pressure responsive driving means connected with said reel for selectively rotating said reel in winding and unwinding directions for winding said delivery hose means onto and off said reel respectively, said driving means including first and second conduit means for separately directing fluid to said driving means, said driving means rotating said reel in the winding direction when fluid is directed to said driving means through said first conduit means and said driving means rotating said reel in the unwinding direction when fluid is directed to said driving means through said second conduit means, and

fluid directing, control means in fluid communication with said source of fluid under pressure, said control means being selectively connectable with said fluid inlet means, said first conduit means, and said second conduit means for selectively directing fluid from said source of fluid under pressure to one of said fluid inlet means, first conduit means and second conduit means.

3,396,748
FUEL-DELIVERING DEVICE FOR A PORTABLE ENGINE
Hiroyuki Hatakeyama, Tokyo, and Yoshimi Sugimoto, Saitama-ken, Japan, assignors to Kabushiki Kaisha Honda Gijutsu Kenkyusho, Saitama-ken, Japan
Filed June 8, 1965, Ser. No. 462,378
Claims priority, application Japan, June 8, 1964, 39/45,360
2 Claims. (Cl. 137—587)

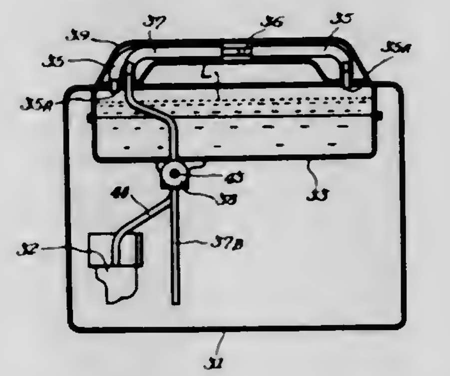

A fuel delivery device including an air supply conduit extending into a hollow handle for an engine carrying case. An air passageway communicates with the air supply conduit and a single valve controls the fuel and air passageways simultaneously.

3,396,749
TEMPERATURE CONTROL HOT AND COLD WATER FAUCET ATTACHMENT
Lena L. Troutman, 418 W. Monroe St., Salisbury, N.C. 28144
Filed July 14, 1965, Ser. No. 471,978
1 Claim. (Cl. 137—603)

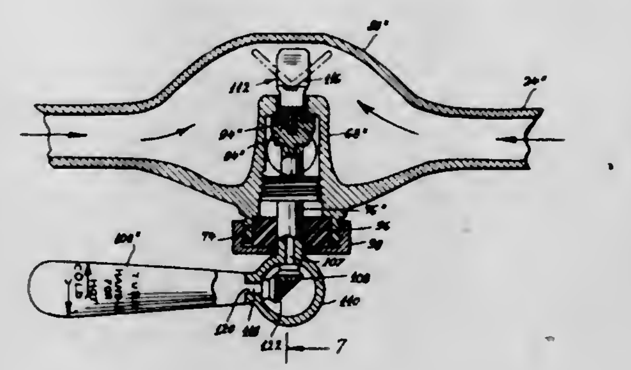

An attachment for operatively joining separate hot and cold water faucets so as to deliver mixed hot and cold

water controlled from a single valve to eliminate the need to adjust further the faucets once adjusted to the desired temperature. The attachment includes an elongated pipe with an enlargement midway its ends. Another pipe extends perpendicularly to the first pipe and is connected at one end to the enlargement. A mixing chamber is formed in the other end of the other pipe. The single valve is positioned in the chamber and an exterior handle actuates the mixing valve. Another attachment eliminates the elongated pipe and is adapted for connection to a single already mixed water spout, a valve head water deflecting device is provided in one attachment.

3,396,750
MILKING MACHINE PULSATOR
Rutger Einar Viktor Nilsson, Sodertalje, Sweden, assignor to Alfa-Laval AB, Tumba, Sweden, a corporation of Sweden
Filed Apr. 1, 1966, Ser. No. 539,545
Claims priority, application Sweden, Apr. 5, 1965, 4,373/65
2 Claims. (Cl. 137—625.25)

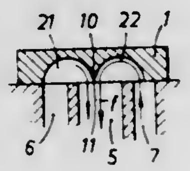

1. A milking machine pulsator including pulsation and evacuation channels, and a reciprocating slide having a vacuum chamber for providing the connection between the pulsation channels of the pulsator, the evacuation channel of the pulsator, and the atmosphere, said channels having openings in the slide plane of the pulsator, the openings of the pulsation channels being located on opposite sides of the opening of the evacuation channel, wherein the vacuum chamber of the slide is divided into two compartments by a partition wall extending from the top of the chamber to the proximity of the slide plane, which compartments communicate with each other by means of a vertically narrow opening between the lower edge of the partition wall and the slide plane.

3,396,751
TWO-POSITION VALVE
Alfred Bender, Hofheim, Taunus, Germany, assignor to Firma Alfred Teves, Frankfurt am Main, Germany, a corporation of Germany
Continuation-in-part of application Ser. No. 412,379, Nov. 19, 1964. This application Oct. 18, 1966, Ser. No. 598,566
Claims priority, application Germany, Nov. 27, 1963, T 25,137
7 Claims. (Cl. 137—625.65)

1. A two-position valve for the control of a fluid under pressure, comprising a valve housing provided with an inlet for fluid under pressure, a port for supplying fluid to a fluid-responsive device, an outlet for discharging fluid at low pressure from said housing, a first passage interconnecting said inlet and said port, and a second passage interconnecting said port and said outlet; means in said housing forming a pair of spaced-apart valve seats, each along a respective one of said passages; a valve member reciprocably displaceable within said housing between a first position in blocking engagement with a respective valve seat and closing said first passage while permitting fluid flow from said port to said outlet through said second passage, and a second position wherein said member is in blocking engagement with the other of said seats to close said second passage and permit fluid flow from said inlet to said port; two-condition magnetic force-applying means operatively connected with said valve member for displacing it from one of said positions to the other in one operative condition of said force-applying means and permitting displacement of said valve member from said other position to said one of said positions in a second operative condition of said

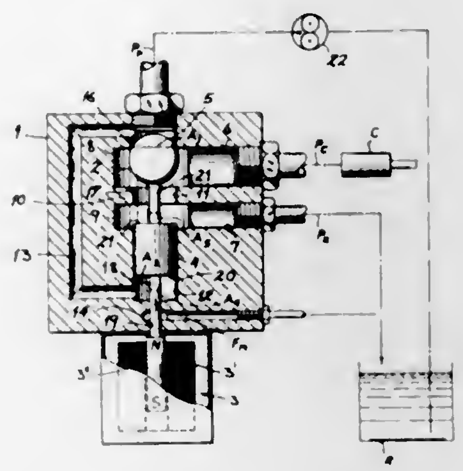

force-applying means; and differential-piston means on said valve member having a first effective surface exposed to fluid pressure applied by said source at said inlet and a second surface effective in a direction opposite to that of said first surface and exposed to the pressure of fluid at said outlet whereby said valve member is displaceable solely by fluid pressure and the action of said magnetic force-applying means between said positions.

3,396,752
INTERNALLY EXPANSIBLE TRAP
Russell Brown Strout and John William Harrison, Winchester, Mass., assignors to Lowry Development Corporation, Winchester, Mass., a corporation of Massachusetts
Filed Apr. 18, 1966, Ser. No. 543,286
5 Claims. (Cl. 138—27)

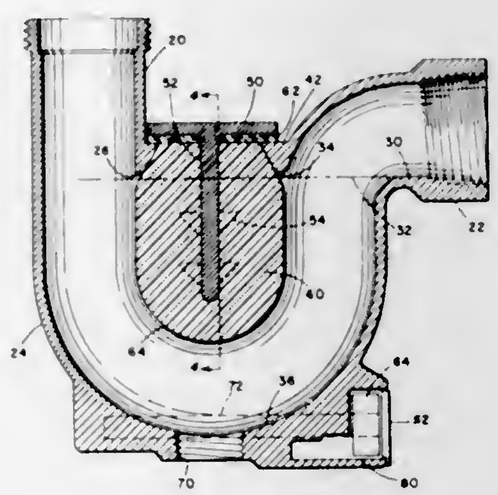

A waste trap unit for basins and toilet bowls providing protection against freeze damage while not interfering with the operation of the trap as a seal against reverse gas flow has a top aperture through which is inserted a composite block of elastically compressible material internally reinforced with a rigid reinforcement that can be rigidly replaceably fastened in the unit so that the trap is expansible in volume in every cross section taken below

the normal level of water transversely to the direction of liquid flow therethrough.

3,396,753
PIPE REPAIR DEVICE
Lawrence E. Foster, Webster Groves, and Harold E. Hicks, Kirkwood, Mo., assignors to Nooter Corporation, St. Louis, Mo., a corporation of Missouri
Filed Feb. 1, 1965, Ser. No. 429,479
3 Claims. (Cl. 138—99)

A pipe repair clamp formed of two halves of a circular lightweight steel shell of "U" cross section with an external packing adjacent to the outer walls of the shell and the pipe held in place without penetrating the packing by clamps over the outer edge of the shell. Engaging flanges are welded onto the ends of the shell and have a round

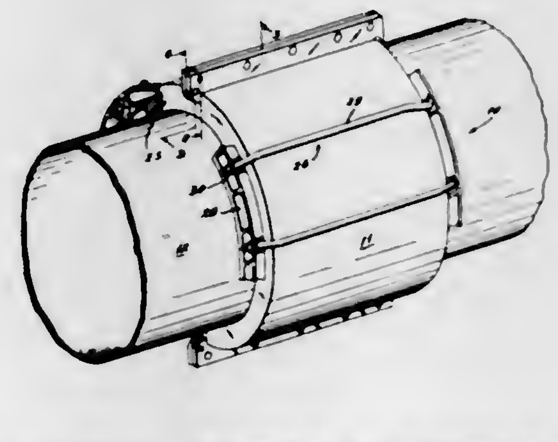

gasket therebetween. The gasket is positioned in an open ended groove terminating at the packing and rods movable from outside the clamps engage the ends of the gasket to force the gasket into sealing engagement with the packing.

3,396,754
DRIVE FOR SELVEDGE FORMING MECHANISMS
Vittorio Scherillo, Florence, Italy, assignor to Nuovo Pignone S.p.A., Florence, Italy, an Italian company
Filed May 10, 1966, Ser. No. 548,979
Claims priority, application Italy, May 15, 1965, 10,932/65
9 Claims. (Cl. 139—54)

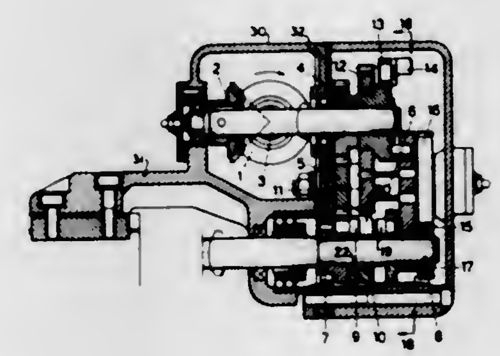

A control device for operating the selvedge mechanism of a shuttleless loom of the type having a crankshaft which rotates once per pick, has a drive shaft, a driven shaft which operates the selvedge mechanism each time it is rotated, a first gear train for driving said driven shaft at the same speed as said crankshaft, a Geneva drive interposed between said drive and driven shafts and operative to intermittently drive a further gear train on alternate revolutions of said crankshaft, and means for selectively coupling said driven shaft to said first and second gear trains, respectively, to insert one selvedge loop for each pick, or for each alternate pick, respectively.

3,396,755
LOOM FRINGE MOTION
Edward C. Nichols, Upton, Mass., and Bertrand E. Guindon, Cumberland, R.I., assignors, by mesne assignments, to John Donald Marshall and Horace L. Bomar, as trustees of the Carolina Patent Development Trust
Continuation of application Ser. No. 505,929, Nov. 1, 1965. This application Sept. 22, 1967, Ser. No. 669,976
6 Claims. (Cl. 139—116)

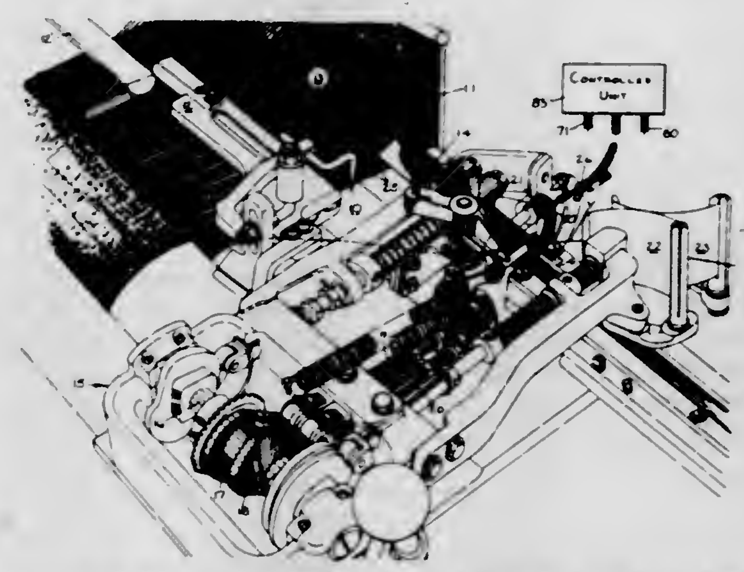

An apparatus for selectively omitting successive picks of filling during loom operation to produce unwoven bands of warp threads for forming a fringe.

3,396,756
MULTICOLOR MAGAZINE CONTROL MEANS
Jaime Picanol, Casa Pairal Catalunya, Zandberg, Zillebeke, near Ypres, Belgium
Filed Nov. 25, 1964, Ser. No. 413,731
Claims priority, application Belgium, Feb. 18, 1964, 643,934
6 Claims. (Cl. 139—232)

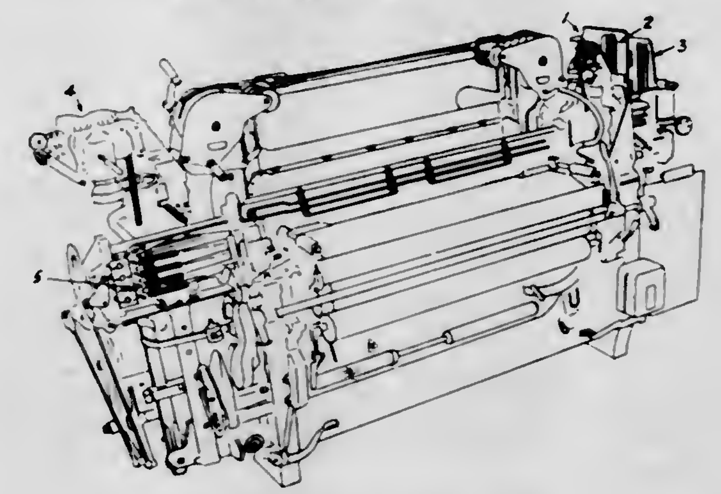

1. In a multi-color loom provided with a mechanism for actuating holding members of magazines, said mechanism comprising a movable selecting-recording device, and a driving device for the selecting-recording device, comprising two constant stroke moving members for positively guiding and securing said selecting-recording device in a number of positions.

3,396,757
WEFT STOP MOTION FOR LOOMS
Mariano Ballbe, Barcelona, Spain, assignor to Magin Desveus Duran, Sabadell, Spain
Filed Mar. 10, 1966, Ser. No. 533,148
Claims priority, application Spain, Mar. 25, 1965, 311,248
3 Claims. (Cl. 139—370)

A weft feeler for use in a loom especially a rapier loom has an oscillating driving member actuated in timed

relation with the loom operating mechanism and this member can be connected to a normally stationary but movably mounted operation control member through a trigger. The trigger is operably connected to a feeler which lies in the path of the moving weft thread on beat-up. If the weft is present it engages the feeler and thereby

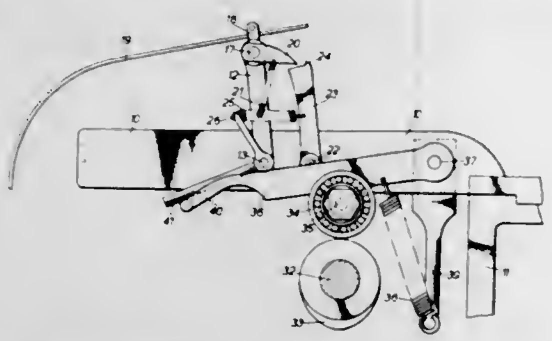

so shifts the driving member that the trigger does not engage the normally stationary control member; but if there is no weft the feeler is not moved and the trigger establishes connection between the driving member and the control member to shift the latter and operate a switch to stop loom operation.

3,396,758
PROCESSING OF TRANSISTOR LEADS
Raymond L. Hall, Whippany, N.J., assignor to Martin G. Heller, West Orange, N.J.
Filed May 6, 1966, Ser. No. 548,317
24 Claims. (Cl. 140—1)

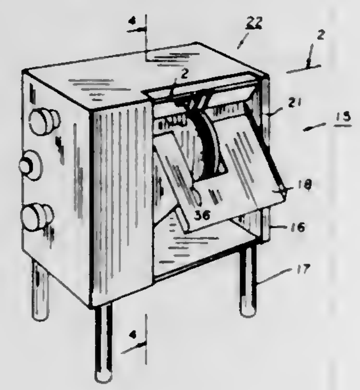

This invention relates to the apparatus and method of processing transistors having a plurality of wire leads or the like extending from one side of the base or body of the transistor.

3,396,759
BARBED WIRE MACHINE
Pierre Donche-Gay, Buenos Aires, Argentina, assignor to American Engineering Company, Limited, Nassau, Bahamas
Filed Apr. 19, 1966, Ser. No. 548,342
8 Claims. (Cl. 140—58)

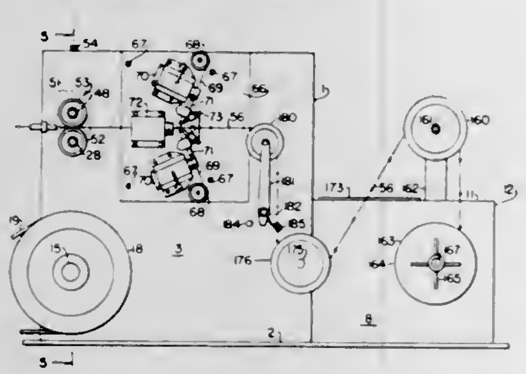

A single strand barb wire machine has a pair of intermittently driven wire forming rollers which flatten the main strand along its entire length except for pairs of closely spaced unflattened portions, the intermittently driven rollers constantly contacting and positioning the main strand to have barbs wound thereon between the closely spaced unflattened portions of the main strand while it is at rest.

3,396,760
STRAPPING TOOL
Peter Kirsinas, Hazel Crest, and Robert F. Plattner, Chicago Heights, Ill., assignors to Interlake Steel Corporation, Chicago, Ill., a corporation of New York
Filed Mar. 4, 1966, Ser. No. 531,921
2 Claims. (Cl. 140—93.4)

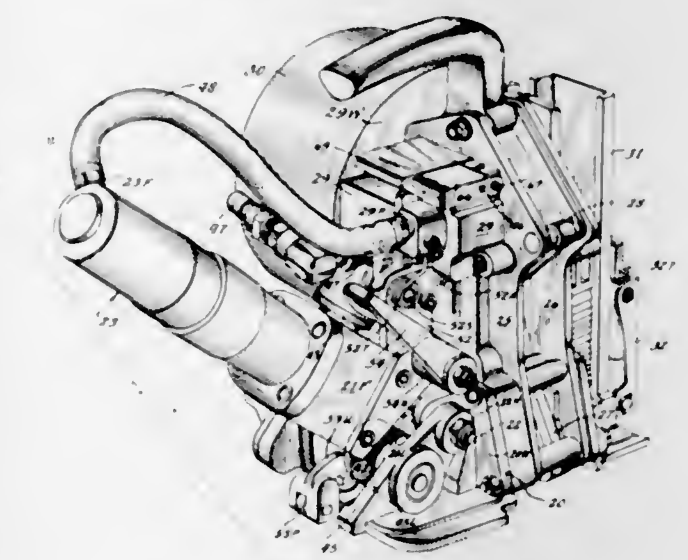

A fluid powered combination strapping tool having a seal supply and capable of fully automatic operation to tension a band encircling an object, apply a crimped seal to the overlapping ends of the encircling band, shear the band while under tension, and reset to strap receiving relation. Improved latching and valving means is provided to facilitate and improve the proper sequential movements of the band tensioning means, the seal forming means and related means in the tool.

3,396,761
METHOD AND APPARATUS FOR PRODUCING A RETICULATED WIRE STRUCTURE
Samuel W. Laswell, Toledo, Ohio, assignor to Sheller-Globe Corporation, a corporation of Ohio
Filed Mar. 18, 1966, Ser. No. 535,529
5 Claims. (Cl. 140—112)

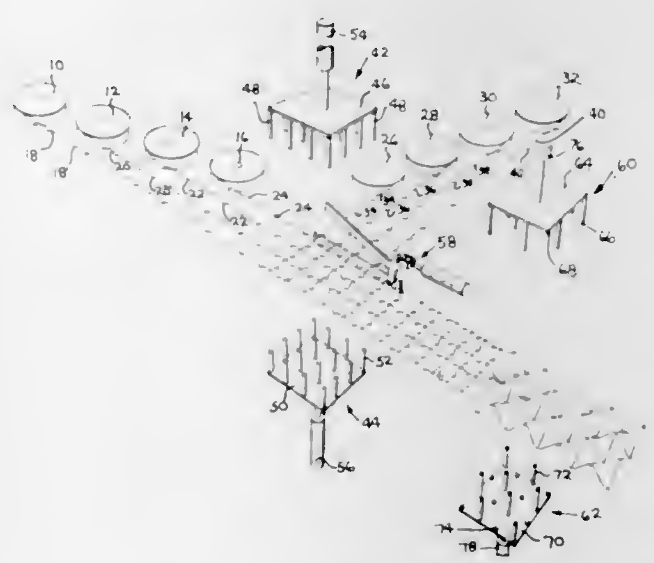

1. A method of producing a three dimensional reticulated wire structure comprising:

feeding a first set of parallel spaced wires along respective parallel spaced paths, the wires of said first set having substantially equally spaced apart corrugations;
feeding a second set of parallel spaced wires along respective parallel spaced paths wherein said paths are substantially transversed to the paths of said first set of wires, the wires of said second set having substantially equally spaced apart corrugations;
causing a portion of the wires of said second set to cross over the wires of said first set;
welding the wires of said first and second sets together at the cross-over points; and
applying opposed forces to transverse alternate cross-over points, said forces being sufficient to straighten the corrugations in the wires of the first and second sets, while maintaining a fixed distance between adjacent cross-over points.

3,396,762
METHODS OF DENSIFYING AND DETERRING DETERIORATION AND CONTAMINATION OF DISCRETE PARTICLE MATERIAL IN A CONTAINER
Hamilton Neil King Paton, Bellevue, Wash., assignor to Dynabulk Corporation, Bellevue, Wash., a corporation of Washington
Filed Sept. 9, 1963, Ser. No. 307,447
9 Claims. (Cl. 141—7)

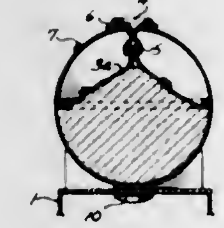

1. The method of deterring deterioration of discrete particle material in a container, which comprises providing a container having a rigid wall and a flexible membrane partition therein having its margin sealed to the container wall at one side of discrete particle material received in the container, replacing air with inert gas in the container at the discrete particle material side of the membrane, and supplying to the container between the rigid container wall and the side of the membrane opposite the discrete particle material gas at a pressure higher than atmospheric pressure and higher than the pressure on the discrete particle material side of the membrane and thereby simultaneously moving the membrane toward the discrete particle material and increasing the pressure of the inert gas to a pressure greater than atmospheric pressure.

3,396,763
BAG FILLING MACHINE
John M. Van Pernis, Chicago, Ill., assignor to Black Products Co., a corporation of Illinois
Continuation-in-part of application Ser. No. 463,151, June 11, 1965. This application Dec. 17, 1965, Ser. No. 514,550
10 Claims. (Cl. 141—68)

A device for filling bags with fluidized powdered material having a conditioning chamber with a valved outlet which terminates in a filling spout. The conditioning chamber is filled via an inlet tube extending about midway into the chamber and the inlet is formed with a collapsible pinch valve at its lower end. A pressurizing gas inlet is provided in the chamber above the lower end of the inlet and then gas is introduced via this inlet to dispense the powdered material, the pressure increase caused

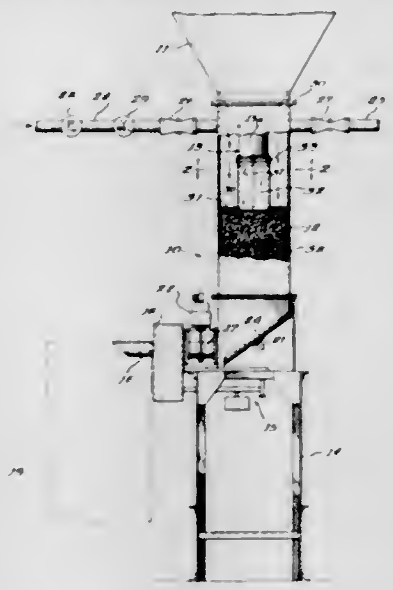

by this gas flow collapses the pinch valve and prevents further material flow into the chamber.

3,396,764
SHAKE BOARD-MAKING MACHINE AND SHAKE BOARD-MAKING PROCESS AND PRODUCT
Stewart B. Ferguson, P.O. Box 12, Aloha, Wash. 98525
Filed July 25, 1966, Ser. No. 567,581
20 Claims. (Cl. 144—326)

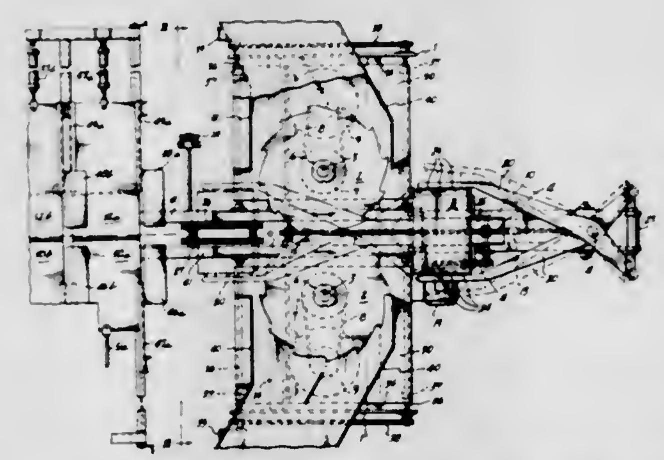

1. A shake board-making machine comprising gang sawing means for sawing kerfs in opposite ends of a block in staggered relationship, and block-splitting means engageable in the kerfs and operable to split the block into shake boards along cleavage zones generally in continuation of the saw kerfs.

18. The process of making shake boards from a block which comprises simultaneously sawing a plurality of kerfs in opposite ends of the block in parallel planes, which kerfs at opposite ends of the block are in staggered relationship, and exerting a splitting force in such kerfs to form splits from the bottoms of the kerfs to the opposite end of the block and thereby dividing the block into shake boards along such kerfs and splits.

3,396,765
SCREW AND DRIVER
Jack B. Ridenour, Lansing, Mich., assignor to General Motors Corporation, Detroit, Mich., a corporation of Delaware
Filed Oct. 3, 1966, Ser. No. 583,546
1 Claim. (Cl. 145—50)

An arrangement for driving devices such as rotatable fasteners. The fastener has both peripheral and central configurations to engage a driver. The driver incorporates

a wrench socket engaging the peripheral configuration and a screwdriver bit engaging the central configuration. These two driving members are nonrotatively but slid-

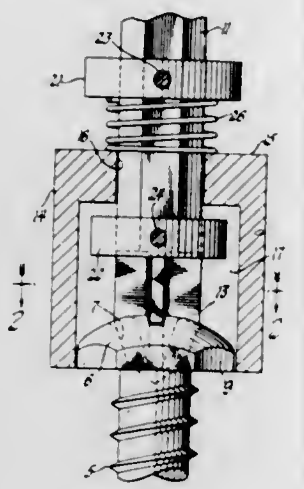

ably coupled together and are biased by springs so that first one engages the driven device, and then upon axial movement the other engages.

3,396,766
ARTICHOKE MACHINE
Granville W. Perkins, Castroville, Calif., assignor to Artichoke Industries, Inc., a corporation of California
Filed Aug. 22, 1966, Ser. No. 573,939
4 Claims. (Cl. 146—52)

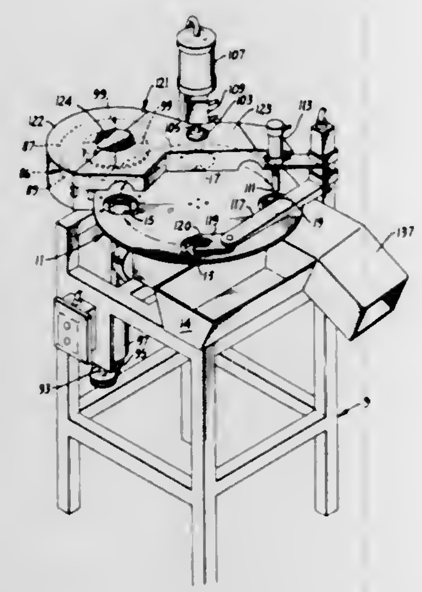

1. A machine for processing artichokes comprising in combination:
(a) a rotating table;
(b) a plurality of apertures in said table;
(c) a four jaw chuck in each of said apertures;
(d) a double rotary knife having one blade above said table and a second blade below said table, said blades being adapted to cut off the tops and bottom leaves of an artichoke held in chuck;
(e) a rotating cutter mounted over the table;
(f) means for raising and lowering said cutter;
(g) a punch mounted over said table, said punch being adapted to press the heart from the artichoke;
(h) means for raising and lowering said punch; and
(i) synchronizing means for actuating said chuck and for rotating said table.

3,396,767
CORN COB SHREDDING ROLLERS
Allison W. Blanshine, Lititz, Charles M. Kline, Reinholds, and Claude K. Focht and Robert E. Wallin, New Holland, Pa., assignors to Sperry Rand Corporation, New Holland, Pa., a corporation of Delaware
Filed July 19, 1966, Ser. No. 566,306
7 Claims. (Cl. 146—71)

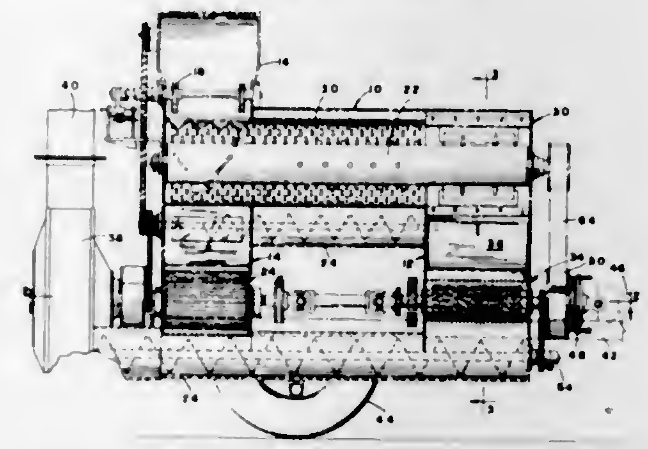

1. Corn cob shredding means for use in processing the same for mixture as an additive to cracked corn to increase the bulk and nutritive value as a cattle food, said shredding means comprising in combination, a pair of rollers comprisinging parallel shafts supported for rotation and circumferentially toothed blades evenly and similarly spaced on said shafts for support and rotation thereby, the teeth of the blades of one roller fitting into the spaces between the blades of the other roller, and drive means connected to said shafts to rotate the same in opposite rotary directions to cause the teeth of the blades of the rollers to move toward each other for engaging corn cobs therebetween to shred the same, the teeth of one roller being substantially larger than those on the other roller and said drive means being operable to drive the roller with the smaller teeth at a substantially higher rotary speed than the roller with the larger teeth, whereby the roller with the larger teeth serves as a metering roller to bring corn cobs into engagement with the smaller and more rapidly moving teeth of the other roller which operate to saw and shred the cobs while being positively fed thereto by the metering roller.

3,396,768
APPARATUS AND METHOD FOR SEPARATING MEAT FROM BONE
Shinji Kurihara, Fukuyama-shi, Japan, assignor to Bibun Machine Construction Co., Ltd., Fukuyama, Hiroshima Prefecture, Japan, a corporation of Japan
Filed Jan. 7, 1966, Ser. No. 519,242
Claims priority, application Japan, Jan. 8, 1965, 40/924; June 28, 1965, 40/38,264
10 Claims. (Cl. 146—222)

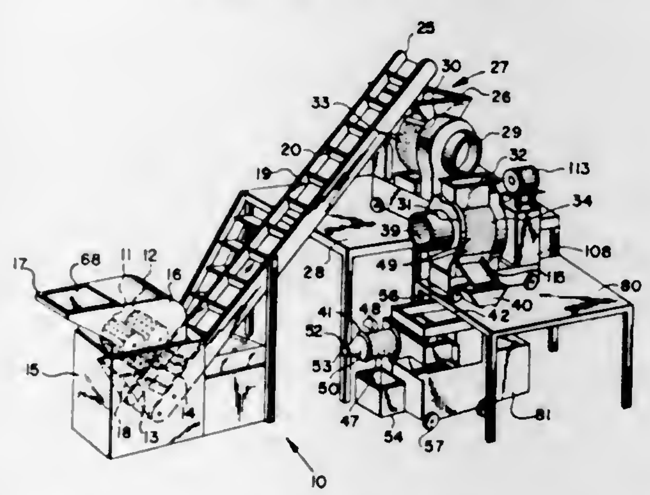

An apparatus for processing meat-bearing material made of edible and inedible parts including a separator having a rotary perforated drum rotatable at a first speed, a means for feeding crushed meat-bearing material to the rotary drum at one area of its periphery, a resilient belt pressingly engaging an area of the drum periphery remote from the said one area, the belt being driven at a speed sufficiently in variance with said first speed such that the meat-bearing material is subjected to crushing and tearing forces so that edible meat-bearing material parts are forced into the interior of the drum.

3,396,769
TOMATO PEELING METHOD
Katsuji Hirahara, San Jose, Calif., assignor to FMC Corporation, San Jose, Calif., a corporation of Delaware
Original application Apr. 16, 1965, Ser. No. 448,785, now Patent No. 3,352,338, dated Nov. 14, 1967. Divided and this application Apr. 11, 1967, Ser. No. 630,042
3 Claims. (Cl. 146—231)

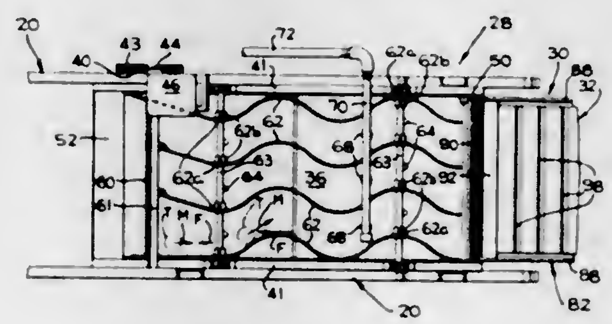

A method of removing the softened, caustically treated skins from tomatoes by rolling the tomatoes down an inclined, upwardly moving belt, retarding the movement of the tomatoes down the belt, and changing the direction of the path of the tomatoes as they roll down the belt.

3,396,770
METHOD OF AND APPARATUS FOR PREPARING FRUIT
Marvin K. Buchner, San Jose, Calif., assignor to FMC Corporation, San Jose, Calif., a corporation of Delaware
Filed Mar. 24, 1966, Ser. No. 537,184
8 Claims. (Cl. 146—241)

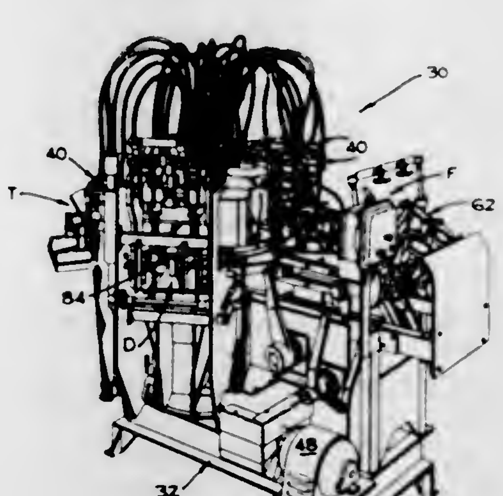

Pear preparation apparatus in which two live peeling knives are used to peel a pear that is impaled upon and rotated by an impaling tube. The knives start the peeling operation at the area of largest diameter and progress, respectively, toward different ends of the pear. While the pear is rotating and is stabilized by the action of the knives against endwise displacement on the impaling tube, a blossom end trimming operation is performed and, synchronized with the removal of the knives from the fruit at the end of the peeling operation, a stem end trimming operation is performed on the rotating pear while it is on the impaling tube.

3,396,771
DETACHABLE SNOW TREAD
Myles E. Reed, 626½ 14th St., Huntington, W. Va. 25701
Filed Sept. 29, 1966, Ser. No. 582,974
1 Claim. (Cl. 152—175)

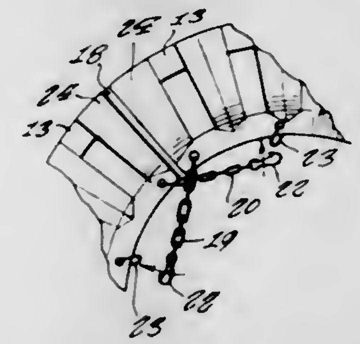

A jacket enclosing the outer periphery and sides of an automobile tire, the jacket incorporating a snow tread, the jacket comprising a circular member having a radial opening so as to allow insertion over an automobile tire, the jacket ends being connected together by constant length connection means in order to prevent the jacket ends from expanding apart due to centrifugal force when an automobile is in travel motion.

3,396,772
TIRE STUD
Raymond A. McCarroll, Grosse Pointe Woods, Mich., assignor to Studebaker Corporation, a corporation of Michigan
Filed Sept. 2, 1966, Ser. No. 577,581
2 Claims. (Cl. 152—210)

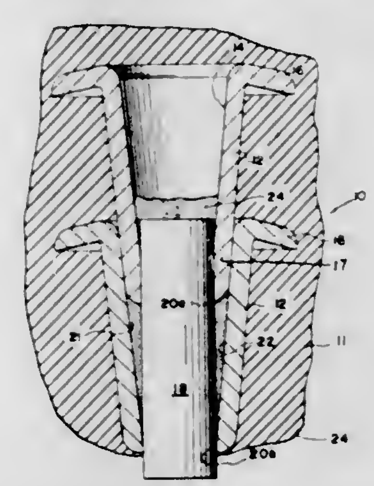

A tire stud comprised of two like flanged tubular body members joined to one another to form a double flanged body and a wear-resistant insert secured in the bores in said tubular body members and projecting slightly from an end of the double flanged body.

3,396,773
CENTRIFUGALLY CAST WHEEL
Sterling W. Alderfer, Akron, Ohio, assignor to Sterling Alderfer Company, Akron, Ohio, a corporation of Ohio
Filed Oct. 23, 1965, Ser. No. 503,803
1 Claim. (Cl. 152—313)

The present invention discloses an industrial wheel having a foam formed body portion with an elastomeric peripheral tread portion. The body portion and the tread portion are integrally joined by an amalgamation of the

materials forming the body and tread portions through an annular bonding zone which lies between the body and tread portions. Such a wheel can be discoid in shape with the side walls of the body portion smoothly conjoined with the tread portion. The density of the foam forming the axial portion of the body has a greater density than the remainder of the body portion to provide

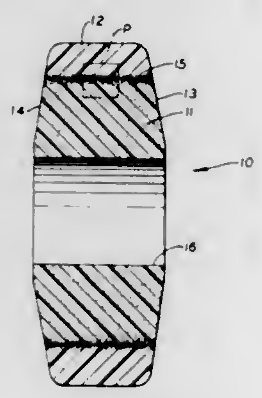

a bearing. The critical amalgamation of the tread and body portions is achieved by rotating the mold in which the wheel is to be formed while sequentialy introducing the tread and body forming materials. By introducing the body foaming material before the tread forming elastomer has solidified, the coalescence of the two materials into an amalgamation in the bonding zone is assured.

3,396,774
INFLATION VALVES
Reginald Harold Edwards and Thomas Holmes, Sutton Coldfield, England, assignors to Dunlop Rubber Company Limited, London, England, a British company
Filed May 24, 1966, Ser. No. 552,565
Claims priority, application Great Britain, June 8, 1965, 24,107/65
7 Claims. (Cl. 152—427)

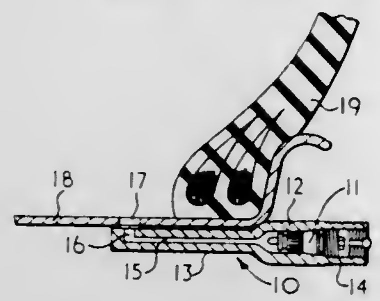

An inflation valve comprising a tubular body portion and a tongue secured by at least one surface to a support member for an inflatable body, a valve assembly secured within the tubular body portion and the tongue being of smaller overall thickness than the overall thickness of the tubular body portion, this tongue having a bore formed within it which extends longitudinally of the tongue and having an outlet formed at one end for communication with the inflatable body, the bore communicating at its one end with the tubular body portion and at its other end with the outlet.

3,396,775
METHOD OF MAKING A SHELL MOLD
Robert K. Scott, Pittsburgh, Pa., assignor to Dresser Industries, Inc., Dallas, Tex., a corporation of Delaware
No Drawing. Filed Nov. 24, 1965, Ser. No. 509,600
5 Claims. (Cl. 164—26)

Method of producing a shell mold by coating a pattern with a refractory containing slurry and a gelling binder, stuccoing the slurry and then subjecting the stuccoed slurry to the vapors of a volatile organic base to cause setting by gelation of the slurry and adherence to the stucco.

3,396,776
METHOD OF CLADDING METAL
Charles F. Funk, Houston, Tex., assignor of twenty-five percent to Jennings B. Thompson, Houston, Tex.
Filed Oct. 20, 1965, Ser. No. 498,360
7 Claims. (Cl. 164—54)

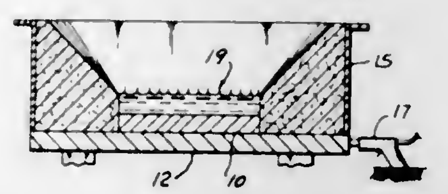

The surface of a metal body is clad with additional metal by the following method. The surface to be clad is surrounded by a mold of the desired shape. A mixture of iron oxide and aluminum is placed in the mold against the surface and a reduction of the iron oxide by the aluminum is started by applying heat to the mixture. The iron oxide is reduced to iron, the aluminum is oxidized and sufficient heat is produced by the reaction to melt the iron and raise it to a superheated temperature. The molten metal in the mold is then vibrated to produce sufficient turbulence to cause a constant replacing of the molten metal adjacent the surface being clad. This insures that the molten iron produced by the reaction will remain in a liquid state the maximum possible length of time thereby increasing the zone of fusion between the clad metal and the metal body, when the clad metal is allowed to solidify. This method also produces a more uniform zone of fusion between the clad metal and the metal body being clad.

3,396,777
PROCESS FOR IMPREGNATING POROUS SOLIDS
John N. Reding, Jr., Midland, Mich., assignor to The Dow Chemical Company, Midland, Mich., a corporation of Delaware
Filed June 1, 1966, Ser. No. 554,537
9 Claims. (Cl. 164—97)

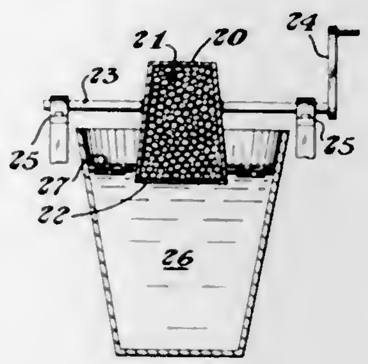

1. A process for impregnating porous solids with metals which comprises
(a) providing a container open to the atmosphere only at one end,
(b) providing a molten bath of a metal,
(c) introducing a particulate porous solid into said container and covering said open end with a cover containing perforations smaller than the particle size of said porous solid, said container cavity and the pores of the porous solid containing an atmosphere which is at least partially reactive with said molten metal,
(d) immersing the perforated end of the container below the surface of the molten metal,
(e) maintaining the perforated end of the container submerged in the molten metal for a predetermined period of time sufficient that the reactive atmosphere in the vessel and in the pores of the porous solid

reacts with a portion of the molten metal thereby forming a reduced pressure and drawing the molten metal into the container and into the pores of the porous solid,
(f) removing the container from the molten metal, and
(g) removing the metal impregnated solids from the container.

3,396,778
APPARATUS FOR CAST CLADDING
Niels H. Jensen, Glenmoore, Robert A. Westman, Coatesville, and Edgar L. Fogleman, Downingtown, Pa., assignors to Lukens Steel Company, Coatesville, Pa., a corporation of Pennsylvania
Continuation-in-part of application Ser. No. 349,288, Mar. 4, 1964. This application Aug. 24, 1964, Ser. No. 393,470
13 Claims. (Cl. 164—275)

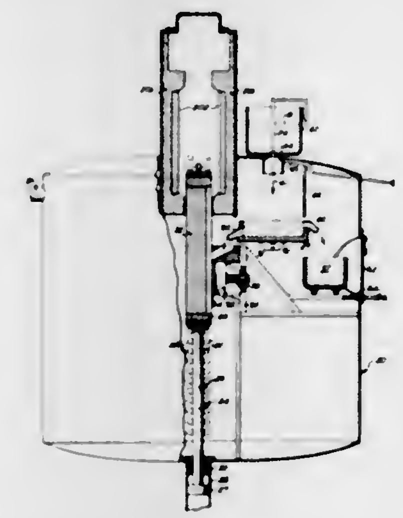

Cladding apparatus wherein a slab held in a graphite frame is lowered within a vacuum chamber past a horizontal mold which bears against the graphite frame and molten cladding metal is continuously poured between the slab and the mold, solidifying as it moves past the mold to form a cladding surface on the slab. The slab is preheated to promote a bond betwen the slab and the metal and prevent warping. The mold is vibrated to eliminate sticking. Alternatively, the frame with the slab is vibrated by pulsing its hydraulic lift for the same purpose.

3,396,779
COMBINED VEHICLE RADIATOR AND REFRIGERANT CONDENSER
James M. Gillis, 7907 Indian Head Highway, Washington, D.C. 20021
Filed Dec. 8, 1966, Ser. No. 600,134
6 Claims. (Cl. 165—42)

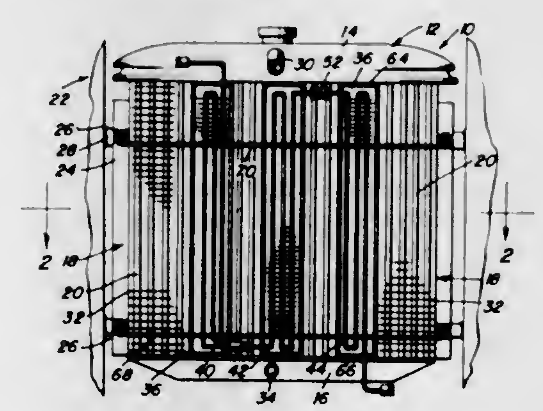

A combined vehicle radiator and refrigerant condenser for an automotive vehicle having an air conditioning system for cooling the interior thereof and a water cooled engine wherein the vehicle radiator is provided with portions thereof blanked out or left open for reception of the condenser coils of the air conditioning system with the condenser coils being insulated from the radiator tubes so that there is no heat transfer between the refrigerant condenser coils and the radiator tubes.

3,396,780
ADD-ON COOLING SYSTEM
Michael A. Koltuniak, Warren, and Thomas N. Urquhart, Troy, Mich., assignors to The Udylite Corporation, Warren, Mich., a corporation of Delaware
Filed June 23, 1966, Ser. No. 560,006
8 Claims. (Cl. 165—47)

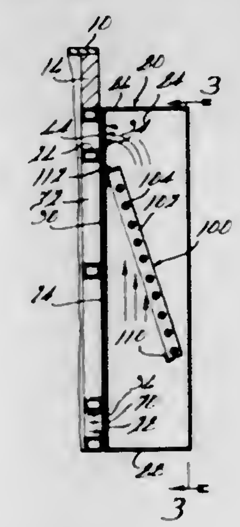

A cooling system for a rectifier assembly including a main cooling apparatus for directing the flow of a cooling fluid across the heat generating electrical components by the the electrical apparatus and an auxiliary cooling unit removably connected to the main housing.

3,396,781
PROCESS AND APPARATUS FOR THE RECOVERY OF WASTE HEAT
Henry John Whetmore, London, England, assignor to Humphreys & Glasgow Limited, London, England, a British company
Filed Dec. 5, 1966, Ser. No. 599,278
Claims priority, application Great Britain, Dec. 8, 1965, 52,086/65
1 Claim. (Cl. 165—103)

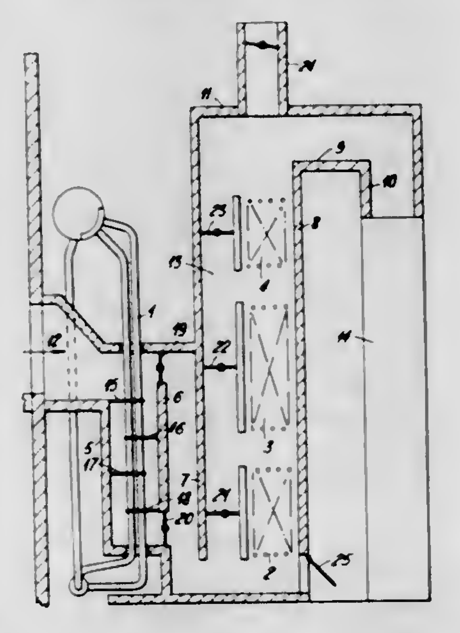

The invention is concerned with a process and apparatus for heat recovery applicable to the continuous reforming of light petroleum hydrocarbons with steam. The flue gases from the furnace used in the reforming processes are passed through a duct having alternate vertical and horizontal passages, the heat exchange operations being

effected in at least two separate vertical passages of the duct. Adjustable by-pass passages for the heat exchangers are preferably provided within the duct and also preferably has at least one additional inlet and outlet, each being preferably situated in one of the horizontal passages.

3,396,782
HEATING UNIT
Emery I. Valyi, Riverdale, N.Y., assignor to Olin Mathieson Chemical Corporation, a corporation of Virginia
Continuation-in-part of application Ser. No. 495,744, Aug. 30, 1965, which is a division of application Ser. No. 398,128, Sept. 21, 1964, now Patent No. 3,289,750, which in turn is a division of application Ser. No. 202,612, June 14, 1962, now Patent No. 3,201,858. This application Feb. 15, 1967, Ser. No. 616,361
4 Claims. (Cl. 165—110)

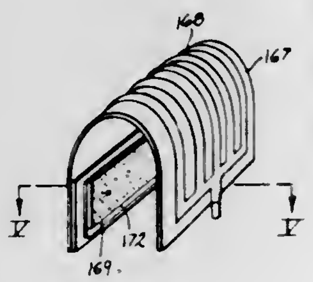

This disclosure teaches a compound heating unit having the following components: a sheet metal member with a system of fluid passages therein; a sheet-like porous body metallurgically bonded to a first portion of the sheet metal member; a channel or channels between the porous body and the sheet metal member; with a portion of the sheet metal member in heat exchange relationship of said porous body.

3,396,783
TEMPERATURE-CONTROLLED PRESS PLATEN
Eugen Siempelkamp, Hohenzollernstr. 69, Krefeld, Germany
Filed Aug. 23, 1966, Ser. No. 574,422
Claims priority, application Germany, Apr. 28, 1966, S 103,471
6 Claims. (Cl. 165—165)

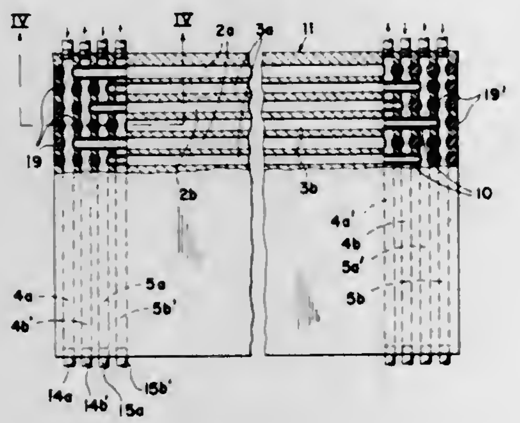

A temperature-controlled press platen having at least two sets of channels each provided with respective inlet and outlet manifolds, the platen body being rigid with an adjoining press plate and having horizontal pipes supported thereon. The manifolds may be passages formed in the body with the inlet manifold of one set of channels and the outlet manifold of another set being disposed on one side of the body while the remaining manifolds are located on the other side.

3,396,784
HONEYCOMBED RESTRICTED TUBE HEAT EXCHANGER
Mehmet Sahabettin Ergenc and Tjing Hian Liem, Zurich, Switzerland, assignors to Sulzer Brothers Limited, Winterthur, Switzerland, a company of Switzerland
Filed Apr. 8, 1966, Ser. No. 541,357
Claims priority, application Germany, Apr. 17, 1965, S 96,613
2 Claims. (Cl. 165—172)

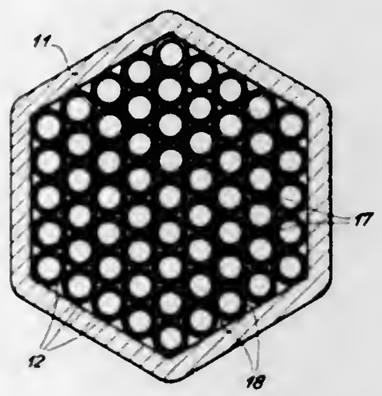

There is disclosed a heat exchanger for use in the cooling or liquefaction of gases of low boiling point and in which, preliminary to liquefaction thereof by expansion through a throttling valve, a gas previously compressed to high pressure and cooled below its inversion temperature is further cooled by passage in countercurrent flow heat exchange relation with cooled gas at low pressure and at a temperature only slightly below that of the gas at higher pressure to be cooled. The exchanger of the invention comprises, for traversal by the low pressure cooling gas, a plurality of tubes of circular cross-section extending parallel to and in contact with each other in a honeycomb, inside a jacket of polygonal cross-section which contacts the outermost tubes of the honeycomb. The spaces of substantially triangular cross-section between adjacent tubes of the honeycomb and between the jacket and the outermost tubes of the honeycomb constitute channels which are traversed by the gas at high pressure to be cooled, and the tubes have a constriction at one point along their length inside the jacket to permit cross-flow among those channels of substantially triangular cross-section.

3,396,785
HEATING UNITS
Bernhard Kirsch, Biewerer Str. 193, Trier-Biewer, Germany
Filed May 20, 1965, Ser. No. 457,324
Claims priority, application Germany, May 22, 1964, K 53,006
3 Claims. (Cl. 165—175)

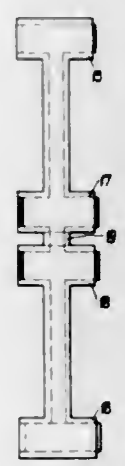

Various heating units in selected sizes and configurations can be assembled by combining a number of identical heating components in different arrangements. Each

component has an upper header and a lower header connected by two elongated, parallel spaced tubes. Each header has at least one passage extending through it transversely of the tubes and communicating with the tubes for circulation of heating fluid. Each header may have additional passages extending transversely of the tubes and intersecting the first passage and may also have a pair of passages in alignment with the tubes so that the heating components can be connected side-by-side, front-to-back, end-to-end or at an acute angle to form a heating unit adaptable to various wall contours. Each heating component is made of unitary moulded plastic construction without seams.

3,396,786
DEPTH CONTROL METHODS AND APPARATUS
Nick A. Schuster and William T. Bell, Houston, Tex., assignors to Schlumberger Technology Corporation, Houston, Tex., a corporation of Texas
Filed Aug. 31, 1966, Ser. No. 576,340
8 Claims. (Cl. 166—4)

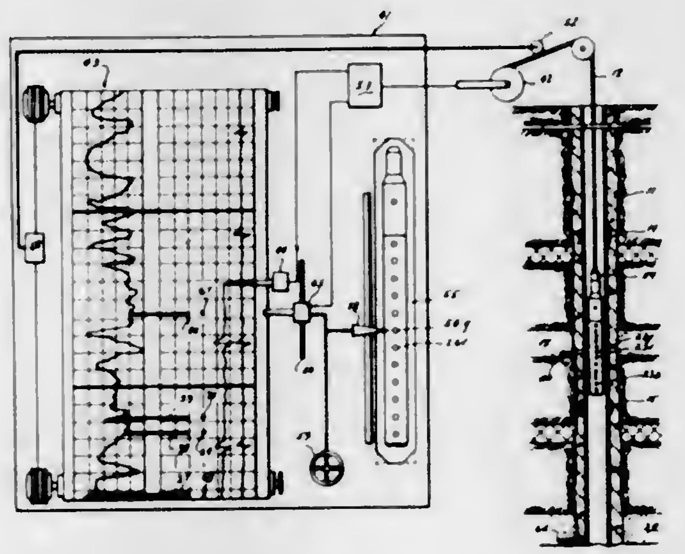

1. A method for completing a well bore at a plurality of depths and which has a distinctive depth-reference point therein at a known depth, comprising: placing into the well bore, means for detecting the distinctive depth-reference point and a well tool having a plurality of completion devices thereon each spaced a known distance from one another and said detecting means; making a chart representative of depth in the well bore and marking on said chart first and second designations respectively of the known depth of the distinctive depth-reference point and of a plurality of desired depths at which the well tool is to be positioned; displaying adjacent to said chart a scaled facsimile of said detecting means and said completion devices on said well tool; moving said detecting means and said well tool into the vicinity of the distinctive depth-reference point for obtaining with first depth-indicating means a first indication in relation to said chart of the apparent depth of said detecting means and for obtaining with second depth-indicating means, a second indication in relation to said chart of the apparent depth of a selected one of said completion devices and a third indication in relation to said facsimile of the spacing between said detecting means and said selected one completion device; correlating said first indication with said first designation to verify the accuracy of said first indication and making adjustments accordingly to obtain with said second depth-indicating means a corrected indication in relation to said chart of the true present depth of said selected one completion device; moving said well tool to bring said second depth-indicating means into correspondence with one of said second designations; operating said selected one completion device while said second depth-indicating means corresponds with said one second designation; adjusting said second depth-indicating means to obtain a different second indication in relation to said chart of the true present depth of another of said completion devices and a different third indication in relation to said facsimile of the spacing between said detecting means and said other completion device; moving said well tool to bring said second depth-indicating means into correspondence with another of said second designations; and operating said other completion device while said second depth-indicating means corresponds with said other second designation.

3,396,787
DEPTH CONTROL METHODS AND APPARATUS
Roy R. Vann, Hobbs, N. Mex., assignor to Schlumberger Technology Corporation, Houston, Tex., a corporation of Texas
Filed Aug. 31, 1966, Ser. No. 576,389
15 Claims. (Cl. 166—4)

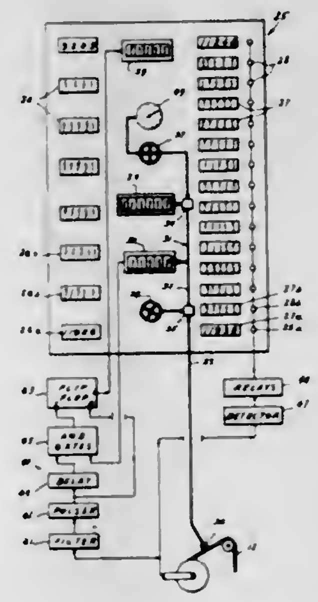

1. A method for positioning a well tool in a well bore having distinctive depth-reference means therein at a known depth, comprising: displaying at the earth's surface first and second designations respectively of the known depth of the distinctive depth-reference means and of a desired depth at which a well tool is to be positioned; placing into the well bore, means for detecting the distinctive depth-reference means and a well tool spaced a known distance therefrom; moving said detecting means and said well tool into the vicinity of the distinctive depth-reference means for obtaining with first depth-indicating means a first indication of the apparent depth of said detecting means and for obtaining with second depth-indicating means, a second indication of the apparent depth of said well tool; correlating said first indication with said first designation to verify the accuracy of said first indication and adjusting at least said second depth-indicating means accordingly to obtain a corrected indication of the true present depth of said well tool; and, thereafter, moving said well tool to bring said second depth-indicating means into correspondence with said second designation.

3,396,788
DEPTH CONTROL METHODS AND APPARATUS
William T. Bell, Houston, Tex., assignor to Schlumberger Technology Corporation, Houston, Tex., a corporation of Texas
Filed Aug. 31, 1966, Ser. No. 576,402
26 Claims. (Cl. 166—4)

1. A method for positioning a well tool in a well bore having distinctive depth-reference means therein at a

known depth, comprising: making a chart representative of depth in the well bore and marking on said chart first and second designations respectively of the known depth of the distinctive depth-reference means and of a desired depth at which a well tool is to be positioned; placing into the well bore, means for detecting the distinctive depth-reference means and a well tool spaced a known distance therefrom; moving said detecting means and said well tool into the vicinity of the distinctive depth-reference means for obtaining with first depth-indicating means a first indication in relation to said chart of the apparent depth

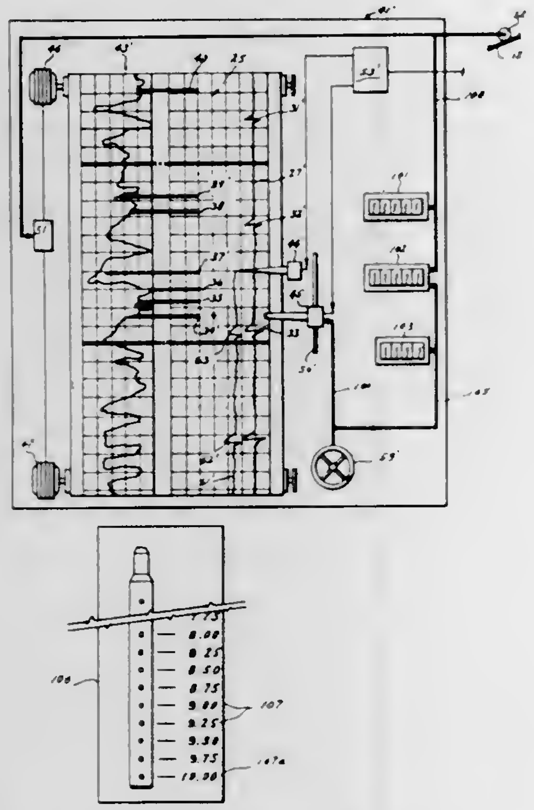

of said detecting means and for obtaining with second depth-indicating means, a second indication in relation to said chart of the apparent depth of said well tool; correlating said first indication with said first designation to verify the accuracy of said first indication and making adjustments accordingly to obtain with said second depth-indicating means a corrected indication in relation to said chart of the true present depth of said well tool; and, thereafter, moving said well tool to bring said second depth-indicating means into correspondence with said second designation.

3,396,789
STORAGE METHOD AND SYSTEM FOR TFL TOOLS
James T. Dean, Dallas, Tex., assignor to Mobil Oil Corporation, a corporation of New York
Filed Sept. 15, 1966, Ser. No. 579,571
5 Claims. (Cl. 166—.5)

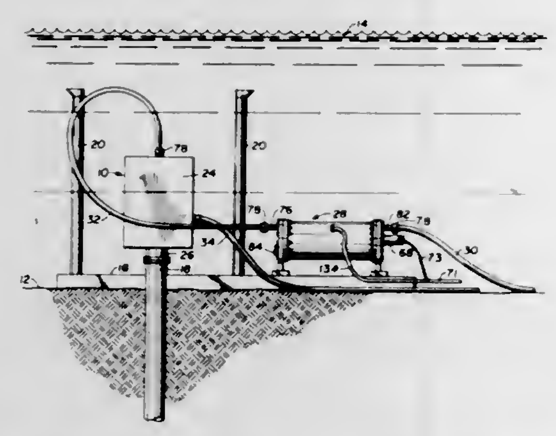

This specification discloses a system for the maintenance of a remotely situated well in conjunction with pumpable tools. A rotatable tool holder, storing a plurality of pumpable tools, is journaled within a barrel or case situated within a flow path extending through the wellhead and into the well. By properly indexing the tool holder, a selected one of the plurality of pumpable tools can be inserted into the tubing string of the well.

3,396,790
SELECTIVE PLUGGING OF PERMEABLE WATER CHANNELS IN SUBTERRANEAN FORMATIONS
Ben A. Eaton, Anaheim, Calif., assignor to Union Oil Company of California, Los Angeles, Calif., a corporation of California
Filed July 11, 1966, Ser. No. 564,142
20 Claims. (Cl. 166—9)

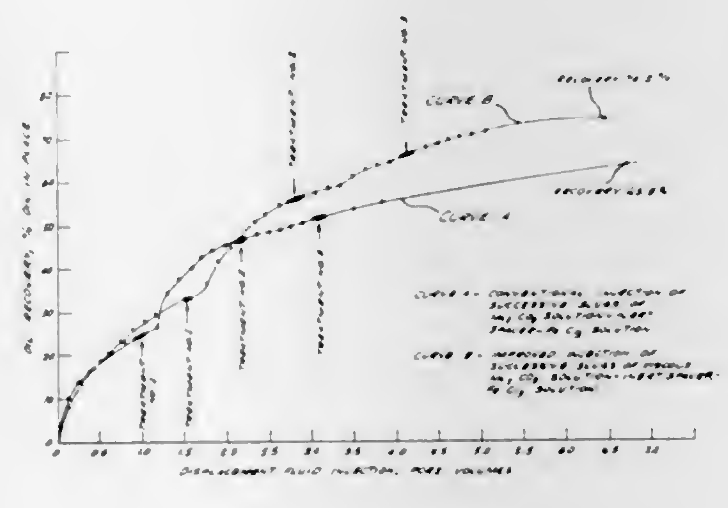

A method for selectively plugging the permeable water channels of a subterranean formation in which there is successively introduced into the formation (1) an aqueous solution of a first reactant material rendered more viscous than the subsequently injected liquids by the addition of a viscosity increasing agent, (2) a low viscosity inert aqueous spacer liquid, and (3) a low viscosity aqueous solution containing a second reactant material which on contact will react with the first reactant to produce an insoluble precipitate.

3,396,791
STEAM DRIVE FOR INCOMPETENT TAR SANDS
Pieter Van Meurs and Charles W. Volek, Houston, Tex., assignors to Shell Oil Company, New York, N.Y., a corporation of Delaware
Filed Sept. 9, 1966, Ser. No. 578,245
6 Claims. (Cl. 166—11)

1. A process for producing petroleum from a viscous petroleum reservoir that is substantially impermeable at reservoir temperature, is substantially incompetent at a temperature that thermally mobilizes the reservoir petroleum and is penetrated by at least one pair of wells that are interconnected by a horizontal fracture extending through the reservoir, which process comprises:

(a) heating aqueous liquid at a surface location and circulating the heated liquid through the fracture between said pair of wells while maintaining a back pressure that at least substantially equals the overburden pressure and an injection pressure that causes flow at a rate adequate for transferring heat from the surface location to the openings into the production well;

(b) increasing the temperature of the circulating heated aqueous liquid until fluid flowing into the production well has a temperature that thermally mobilizes the reservoir petroleum while increasing the softness of the aqueous liquid to the increasing extent required

to provide a liquid that is nonscaling at the temperature to which the liquid is being heated;

(c) forming a permeable path within the reservoir by entraining the thermally mobilized reservoir petroleum in the circulating heated aqueous liquid and thus converting a portion of the reservoir to a layer of petroleum-depleted permeable sand;

(d) reducing the pressure within the reservoir to less than overburden pressure and circulating steam through the reservoir at a temperature at which said reservoir petroleum is mobilized and entrained;

(e) recovering said petroleum from fluid that has circulated through the reservoir.

3,396,792
PROCESS FOR RECOVERY OF PETROLEUM BY STEAM STIMULATION
Fred D. Muggee, Anaheim, Calif., assignor to Magna Corporation, Santa Fe Springs, Calif., a corporation of California
Filed Apr. 1, 1966, Ser. No. 539,543
15 Claims. (Cl. 166—40)

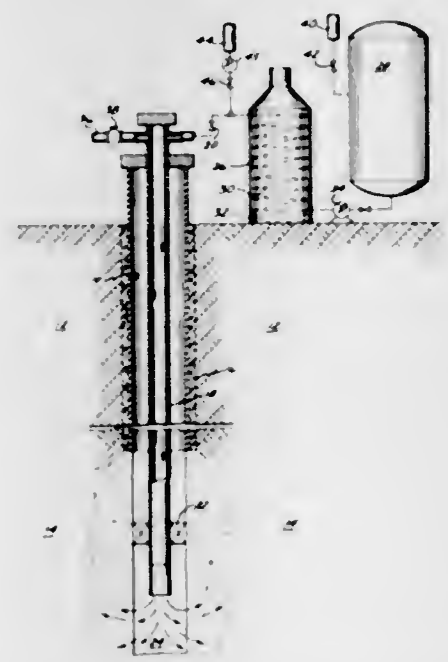

A steam-stimulation process in which a small amount of surface-active material is added continuously to the steam which is then injected into an oil-bearing formation. The surface-active agent is water soluble, heat stable, and effective to substantially prevent creation of water-in-oil emulsions in the formation. After a substantial period of steam injection, followed by a protracted soaking interval, the formation is produced in order to recover the crude as well as a substantial amount of condensate of the injected steam.

3,396,793
GAS WELL DEWATERING CONTROLLER
Myron M. Piper, Marshalltown, Iowa, and Truman B. Burris, Houston, Tex., assignors to Fisher Governor Company, a corporation of Iowa
Filed July 5, 1966, Ser. No. 562,813
5 Claims. (Cl. 166—53)

A gas well dewatering controller arrangement including a main valve for controlling flow through a conduit communicating tubing in a gas well casing with a reservoir. The arrangement includes a differential pilot, a shut-in valve and a block valve operatively connected to one another and to the main valve. The differential pilot is responsive to the difference between tubing pressure and casing pressure and opens the main valve whenever the pressure difference increases to a predetermined value. The block valve is tripped when the tubing pressure falls to a sufficiently low level. The shut-in valve trips after tubing pressure increases from a minimum value to cause the main valve to close. The arrangement resets when

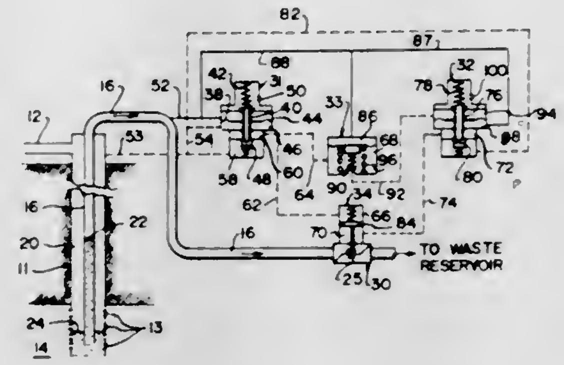

the difference between tubing pressure and casing pressure again reaches a first value which is below the original threshold value required to trip the differential pilot.

3,396,794
WASHOVER TOOL, PIPE CUTTER AND RETRIEVER
Derrel D. Webb, Houston, Tex., assignor to Houston Engineering, Inc., Houston, Tex., a corporation of Texas
Continuation of application Ser. No. 519,889, Jan. 11, 1966. This application Oct. 23, 1967, Ser. No. 680,610
9 Claims. (Cl. 166—55.6)

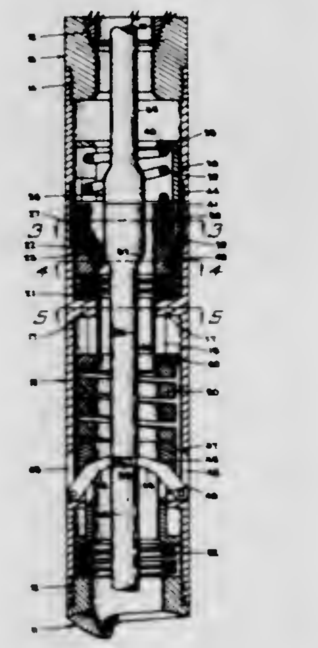

A washover tool, pipe cutter and retriever designed particularly to be used with pipe or tubing having smooth, tapered joints, and being further characterized by its ability to selectively retrieve or cut the pipe, or release the tool from the joint, as working conditions dictate.

3,396,795
TUBING CUTTER
Alexis A. Venghiattis, Weston, Conn., assignor to Dresser Industries, Inc., Dallas, Tex., a corporation of Delaware
Filed Sept. 9, 1966, Ser. No. 578,189
10 Claims. (Cl. 166—55.7)

6. A cutter for severing tubing located in a well bore, said cutter comprising:

a hollow housing member arranged to be moved through the tubing;

a motor pivotally disposed in said housing member and including a rotatable shaft projecting therefrom;

holding means responsive to the reaction of said motor for engaging the tubing to prevent rotation of said motor; and

a cutter assembly operably mounted on said shaft, said cutter assembly including
a plurality of segmented cutter members arranged circumferentially around said shaft, and

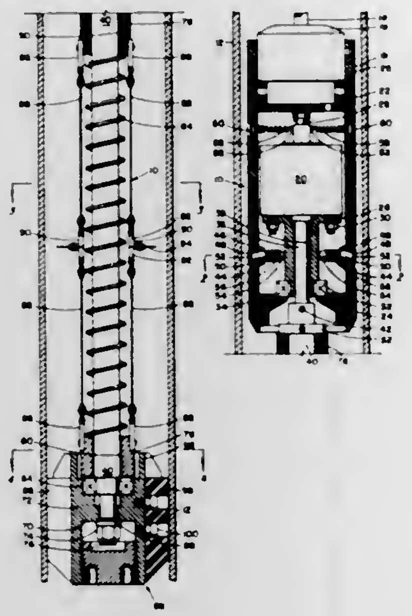

linkage means operably connecting said cutter members with said shaft, whereby said cutter members are moved by centrifugal force, when said shaft is rotating, into cutting engagement with the tubing.

3,396,796
FLUID-SAMPLING APPARATUS
Ulrich E. Voetter, Houston, Tex., assignor to Schlumberger Technology Corporation, Houston, Tex., a corporation of Texas
Filed Dec. 1, 1966, Ser. No. 598,447
6 Claims. (Cl. 166—100)

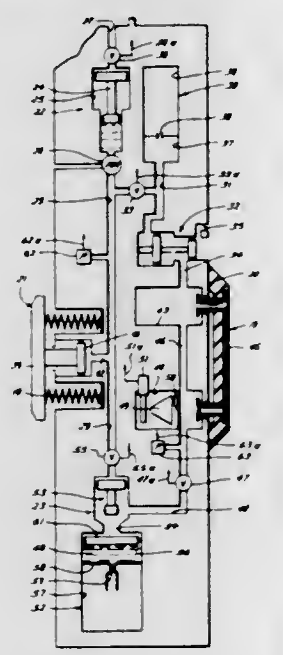

This application discloses fluid-sampling apparatus including a particularly arranged sealing member for taking fluid samples along an elongated interval of earth formations. More particularly, the sampling apparatus is described as including an elongated sealing member having a long recess in its forward face for isolating an elongated section of an earth formation. Spaced ports are formed through the sealing member so as to terminate in the long recess. By connecting sample-admitting means in the apparatus to these ports, fluid samples can be taken through either or both of the ports irrespective of which portion or portions of the isolated formation interval are producible.

3,396,797
APPARATUS FOR INJECTING AND WITHDRAWING FLUIDS FROM A WELL
Thomas W. Little, Fort Worth, Tex., and Robert E. Finken, Alexandria, United Arab Republic, assignors to Phillips Petroleum Company, a corporation of Delaware
Filed Mar. 21, 1966, Ser. No. 536,065
7 Claims. (Cl. 166—105)

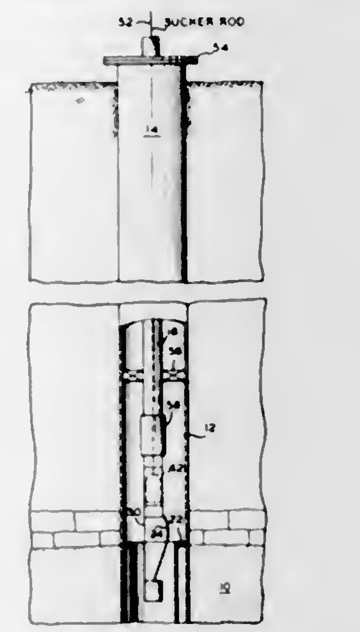

Apparatus is provided for alternately injecting fluids thru a well into a stratum, such as an oil stratum, and producing fluids thru the well, comprising an elongated tube attachable at its upper end section to a downhole tubing string below a pump thereon and open on the lower end; valve means, such as a check valve or sleeve valve, in an intermediate section of the tube operable to allow ingress of fluids directly from outside of the tube when in one position and to prevent egress of fluids when in another position; and a tail pipe on the lower end of the tube communicating therewith for passing injected fluids to a lower level in the well. The apparatus is attached to the lower end of a tubing string containing a retractable pump, there being an expanded section of tubing above the pump into which the pump is drawn to allow injected fluid to pass around the pump and thru the apparatus into the surrounding stratum.

3,396,798
CIRCULATING WASHER TOOL
Erwin Burns, Los Angeles, and Leslie Jones, Buena Park, Calif. (both % Burns Tool Co., 8343 Salt Lake Ave., Bell, Calif. 90201)
Filed Nov. 14, 1966, Ser. No. 593,924
10 Claims. (Cl. 166—147)

1. A well tool of the character referred to including an elongate, vertical, inner assembly with a central, longitudinal flow passage, means at the upper end of the inner assembly to releasably connect with the lower end of an elongate string of fluid conducting pipe, a lateral port spaced between the ends of said inner assembly communicating with the flow passage, an elongate, vertical, outer assembly rotatably engaged about and extending below the inner assembly, a lateral port between the ends of said outer assembly and shiftable into and out of register with the port in the inner assembly upon relative rotation of said inner and outer assembly, upper and lower, radially outwardly extending packing means carried by the outer assembly above and below the lateral port therein to engage and seal between the tool and an adjacent well structure, said inner and outer assemblies cooperating to define upper and lower annular flow passages within the tool above and between the lateral ports and terminating below the upper end of the outer assembly and above the lower end of the inner assembly, radial inlet ports in the

outer assembly below the lower packing means, establishing communication between the lower annular flow passage and the exterior of the tool, flow means in the construction establishing communication between said upper annular flow passage and the exterior of the tool above the upper packing means, a transfer passage in the tool about the lateral port in the outer assembly and communicating between the upper and lower annular flow passages, an axially downwardly opening fluid conducting port in the outer assembly spaced below the lower end of the inner assembly, valve means carried by the outer assembly adjacent the lower end of the inner assembly to control the flow of fluid downwardly through the downwardly opening port and including a part in the outer assembly below the inner assembly having a flat axially upwardly disposed top surface and an axially extending flow port offset from the central axis of the construction, a valvular cage rotatively arranged in the outer assembly

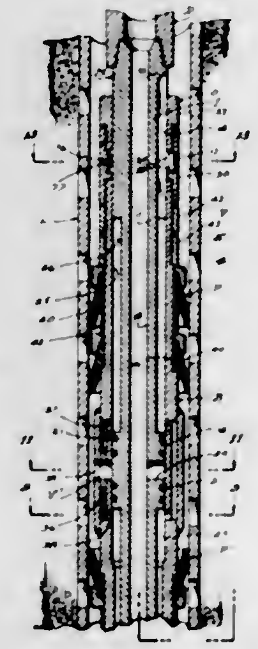

between the said part and the lower end of the inner assembly and having a flat, downwardly disposed bottom surface establishing flat sliding, sealing engagement in the top surface and an axially extending fluid conducting port radially offset from the central axis of the tool and adapted to be shifted into and out of register with the flow port upon relative rotation of the inner and outer assemblies, drive means between and establishing rotary driving engagement between the cage and the lower end of the inner assembly and friction means carried by the outer assembly to engage well structure adjacent the tool to hold the outer assembly stationary relative to the inner assembly upon rotation of the string of pipe and the inner assembly, said lateral ports in the construction arranged to be in register with each other when the ports of said valve means are out of register.

3,396,799
DESCENT-FACILITATING APPARATUS FOR WELL TOOLS
Ronald A. Anderson and George H. Pardue, Houston, Tex., assignors to Schlumberger Technology Corporation, Houston, Tex., a corporation of Texas
Filed Sept. 2, 1966, Ser. No. 576,999
13 Claims. (Cl. 166—243)

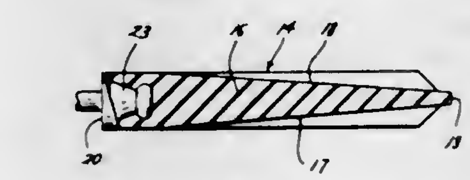

12. Apparatus particularly for use in deviated well bores having liquids therein and comprising: a well tool; and guiding means coupled to the lower end of said well tool and including an elongated body having a length greater than its transverse width and its transverse width greater than its height, said body having means extending along its length for spacing said body above the upwardly facing surfaces of a deviated well bore to permit well bore liquids to flow under said body and exert pressure forces thereon tending to lift said body as said well tool progresses down the well bore.

3,396,800
ARRANGEMENT IN SEA-GOING VESSELS DRIVEN BY TWO COUNTER-ROTATING PROPELLERS
Oscar Hilding Hillander, Malmo, and Ingvar Karl Einar Jung, Finspong, Sweden, assignors to Stal-Laval Turbin AB, Finspong, Sweden
Filed Oct. 27, 1966, Ser. No. 589,965
Claims priority, application Sweden, Dec. 9, 1965, 15,999/65
2 Claims. (Cl. 170—135.28)

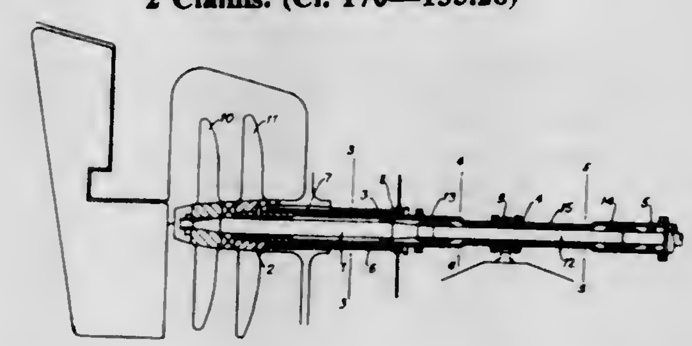

An arrangement for use in sea-going vessels and especially those employing two co-axially situated propeller shafts. In this arrangement the propeller shafts each consist of detachable portions disposed in end-to-end relationship and the outer shaft, which is hollow, is split or divided longitudinally, at least for a substantial portion of its length, so that by removing one half of the split portion of said outer shaft, access will be obtained to a coupling and journal of the inner shaft.

3,396,801
AIR PROPELLER
Hector Delorme, 1 St. Paul St., Farnham, Quebec, Canada
Filed June 30, 1966, Ser. No. 561,860
6 Claims. (Cl. 170—170)

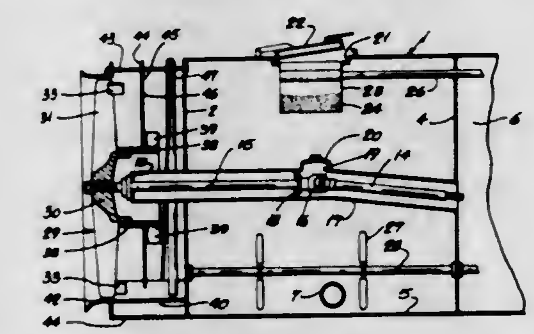

This invention concerns an improved air blowing system for use in spraying and dusting machines, the system comprising an axial air propeller carrying deflector plates at the ends of the propeller blades to assist in deflecting the air radially outwardly.

3,396,802
RUN-OFF CONTROL AND METHOD AND APPARATUS FOR MAKING
Morris D. Scranton and Gordon N. Scranton, both of Lamar, Colo. 81052
Filed Nov. 23, 1964, Ser. No. 413,141
18 Claims. (Cl. 172—1)

The invention comprises apparatus for use in conservation of rainfall in semiarid agricultural areas and com-

prises a pit digger operative when pulled by a tractor to dig at least two transversely spaced rows of longitudinally separated water receiving pits with pits in adjacent

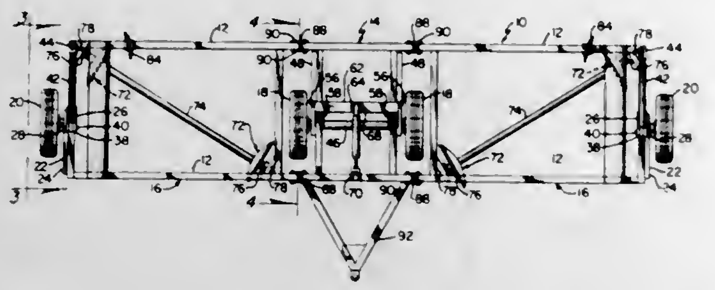

rows being staggered, and to pile the dirt from each pit in a dike or dam extending longitudinally between the pit and the next pit to be dug, the purpose of the dike being to divert rain water into the pits adjacent its ends.

3,396,803
AUTOMATIC DEPTH CONTROL DEVICE FOR TRACTOR-HAULED AGRICULTURAL IMPLEMENTS
Antonio Corni, Turin, Italy, assignor to Fiat Società per Azioni, Turin, Italy
Filed June 28, 1965, Ser. No. 467,578
Claims priority, application Italy, July 10, 1964, 15,596/64
3 Claims. (Cl. 172—7)

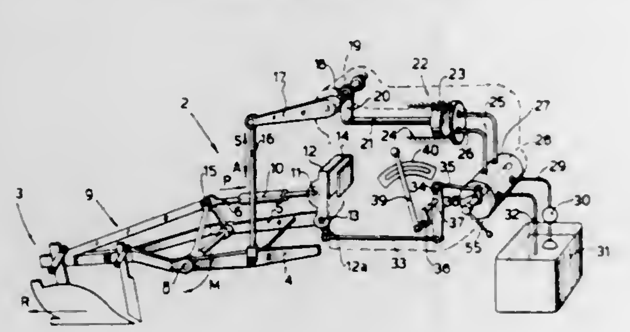

A fluid distributing valve controlled by one of the three-point hauling levers of a tractor for automatically controlling a servomotor which operates the other two hauling levers. A valve control member is provided having adjustable means for adjusting the amount of displacement necessary to move the control member from the fluid feed to the fluid discharge position.

3,396,804
VIBRATORY PLOW
Thelmer A. Rogers, P.O. Drawer 1589, Lubbock, Tex. 79408
Filed Apr. 2, 1965, Ser. No. 445,156
13 Claims. (Cl. 172—40)

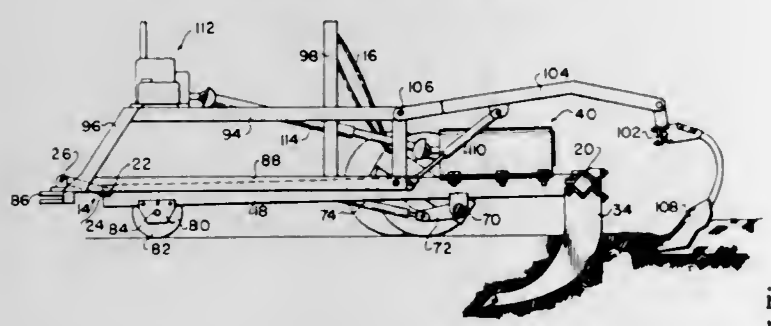

A plow frame vibrated by a pair of rotating eccentric weights has a ground engaging wheel next to the hitch to prevent transmission of vibration into the hitch. An outer frame surrounds the vibrated frame for isolation of vibration, for lifting the vibrated frame, and for carrying auxiliary equipment.

3,396,805
VIBRATING DEVICES
Ludwig Müller, 44–46 Heinrich Heine-Str., 355 Marburg an der Lahn, Germany
Filed Jan. 3, 1966, Ser. No. 518,102
10 Claims. (Cl. 173—49)

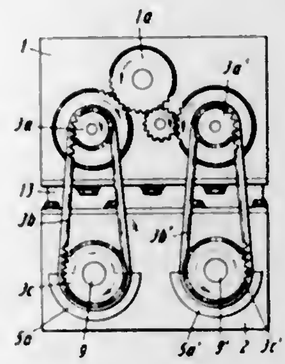

There is shown a centrifugal vibrating device for generating directional vibrations as are used for pile driving operations. The device comprises a main imbalance member which is rotated by driving a shaft seating the same and an auxiliary imbalance member which is also rotated and the angular position of which in reference to the main imbalance member can be changed, thereby correspondingly varying the magnitude of the imbalance action added by the auxiliary member to the imbalance action of the main member. The device also comprises means for varying the ratio of the transmission by which the main imbalance member is coupled to a drive motor and safety means to assure that the desired ratio of transmission is actually present.

3,396,806
THERMAL UNDERGROUND PENETRATOR
Glendon M. Benson, Danville, Calif., assignor to Physics International Company, Berkeley, Calif., a corporation of California
Filed July 28, 1964, Ser. No. 385,584
17 Claims. (Cl. 175—11)

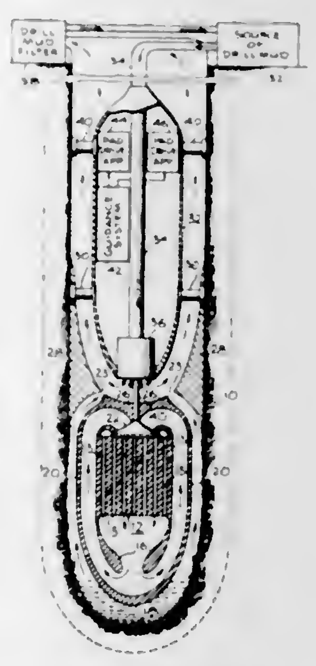

1. Apparatus for tunneling through material comprising, heat generating means for generating temperatures higher than the melting temperature of the material through which it is desired to tunnel, means for applying heat from said heat generating means to said material to cause it to become molten, means for removing said molten material to leave a hole, means for in situ forming compressively loaded hole casing from molten material, and means for guiding said heat generating means to determine the direction of said hole.

3,396,807
ROTARY-IMPACT DRILL
Jack K. Menton, 11191 Saratoga Drive, Los Alamitos, Calif. 90720
Filed Sept. 27, 1966, Ser. No. 582,405
8 Claims. (Cl. 175—293)

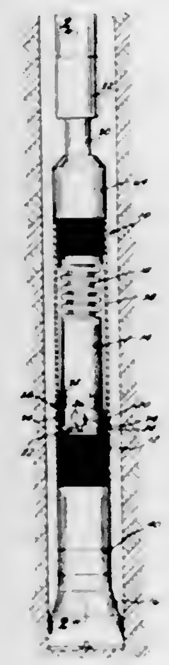

1. A rotary-impact drill, comprising:
an anvil adapted for connection to a drill bit for turning therewith;
a hammer mounted for axial and rotational movement relative to said anvil;
spring means continuously urging said hammer toward said anvil;
complementary, tooth-shaped hammer and anvil cams on said hammer and anvil, respectively, including cooperative vertically sloping surfaces terminating in substantially vertical shoulders whereby as said hammer rotates relative to said anvil, said hammer cams repeatedly ride up along said sloping surfaces said anvil cams and under the influence of said spring means drop heavily onto said anvil cams upon leaving said sloping surfaces and reaching said shoulders of said anvil cams;
and cooperative means connected to said anvil and hammer for directing said hammer cams vertically downward during ecah drop with said shoulders of said hammer cams dropping along and immediately adjacent said shoulders of said anvil cams to insure a maximum hammer stroke and a maximum hammer and anvil impact during each drop.

3,396,808
MATERIAL-IN-SUSPENSION COMPENSATOR AND TARE ADJUSTER
James C. Petrea, Durham, N.C., assignor, by mesne assignments, to Wright Machinery Company, Inc., a corporation of North Carolina
Filed June 6, 1967, Ser. No. 643,967
6 Claims. (Cl. 177—165)

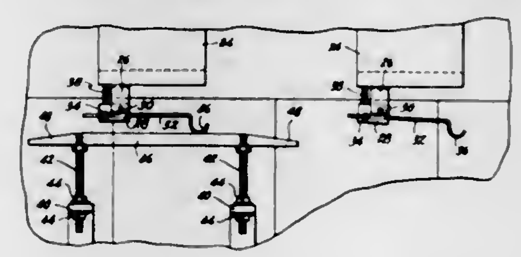

Material feeding means delivering a stream of material to a weighing bucket moving along a path. When a predetermined or preset weight of material is at rest in the bucket, the feeding means is stopped but "material-in-suspension" between the feeder and the bucket causes an overfill. After the feeding means has stopped, a cam adjacent the bucket path reduces the tare weight of the bucket by supporting part of the weight of a movable element on the bucket and if the overfill did not at least equal this reduction in tare weight additional material is added.

3,396,809
DRIVE ASSEMBLY FOR POWERED MOWER
Robert E. Kortum, Hazelwood, Mo., assignor to Atlas Tool & Manufacturing Co., St. Louis, Mo., a corporation of Missouri
Filed Feb. 16, 1966, Ser. No. 527,895
15 Claims. (Cl. 180—19)

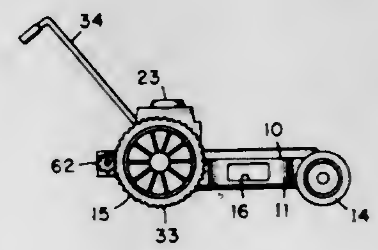

The assembly includes a frame supporting a prime mover and a transmission means. An output shaft extends outwardly from the transmission means and is connected by spring-type universal joints to a pair of drive shafts. Each drive shaft mounts a drive wheel member engageable with a ground wheel. A bracket is pivotally mounted to each side of the frame, each bracket including a swivel bearing rotatively mounting the drive shaft and providing an actuating means swinging the drive member into driving engagement with its associated ground wheel. A handle pivotally mounted to the frame, is interconnected to the actuating means by a toggle mechanism having one arm connected to the frame and the other arm connected to the swivel bearing of the bracket.

3,396,810
SURFACE, MATERIAL AND HEALTH PROTECTIVE DEVICE
Peter Andrews, 190 Gebhardt Road, Penfield, N.Y. 14526
Original application June 17, 1963, Ser. No. 288,159. Divided and this application Oct. 21, 1965, Ser. No. 508,625
16 Claims. (Cl. 180—69.1)

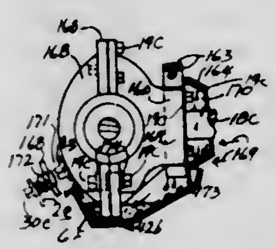

1. A surface, material and health protective device used in operative association with a motor vehicle having accessible bolt securing means comprising: a collar-like member having means for securing at least one portion of said member to a fluid shaft seal containing gear housing portion of and under said vehicle, said member having at least one portion extending substantially around a shaft means and beyond the end of said housing portion having lubricating fluid inside, said housing portion having said shaft means protruding out of and beyond said housing portion, said collar-like member is so constructed and arranged and secured to said housing portion that when said shaft means rotates, the fluid which leaks past

said seal is thereby virtually thrown out in substantially pin wheel fashion and is substantially captured and retained in said collar-like extended portion and when said shaft means is not rotating, the dripping fluid from said housing portion is also substantially captured and retained in said extended portion.

3,396,811
REMOTE CONTROL FOR AUTOMOBILES
Grover W. Bowers, 1724 McCready Ave., and Francis H. Kennedy, 22 Berkshire, both of Richmond Heights, Mo. 63117
Filed Oct. 13, 1965, Ser. No. 500,484
2 Claims. (Cl. 180—98)

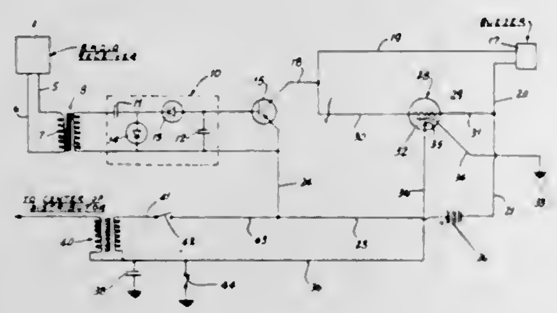

A device for stopping or warning an automobile and the like including, as a compact unit for installation on a car, a radio receiver, a transformer, a voltage doubler and the like, a transistor, a time delay relay, a connection from the relay to ground and to the condenser of a car, a buzzer, and electrically interconnecting wiring.

3,396,812
ACOUSTIC QUARTER WAVE TUBE
Richard Wilcox and J Alson Beaman, Columbus, Ind., assignors to Arvin Industries, Inc., Columbus, Ind., a corporation of Indiana
Filed July 5, 1967, Ser. No. 651,236
2 Claims. (Cl. 181—48)

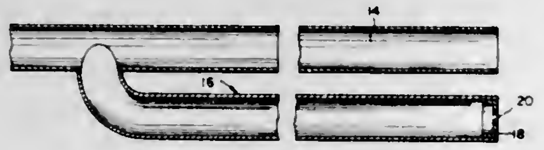

A sound attenuating system employing a tube connected to a gas carrying pipe adapted to be connected to a source of sound energy for attenuating the noise level of the sound waves discharged from thte pipe. The pipe has one or more sound pressure points along its length, and said tube connected to the pipe at one of said sound pressure points. The tube has a length equal to one-fourth of the wave length of the frequency producing said one pressure point and has at least one opening in its end remote from its connection to said pipe for modulating its attenuating effect.

3,396,813
SILENCER OR MUFFLER AND METHOD OF PRODUCING SAME
James R. Hall, Toledo, Ohio, assignor to Oldberg Manufacturing Company, Grand Haven, Mich., a corporation of Michigan
Filed Apr. 26, 1967, Ser. No. 633,900
16 Claims. (Cl. 181—61)

This invention relates to sound attenuation devices and more particularly to a silencer or muffler and a method of producing same for attenuating sound waves of exhaust gas streams from an internal combustion engine of an automotive vehicle and embraces a one-piece tubular muffler shell with dome-shaped smoothly curved end re-

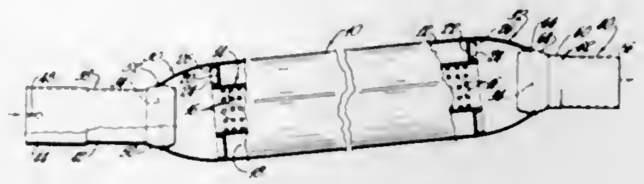

gions in combination with coupling bushings or nipples having spherically-shaped regions fitting into openings at the ends of the muffler and being adjustable to varying angularities, the spherical regions of the bushings or nipples being welded to the ends of the muffler shell.

3,396,814
POWER LADDER AND SAFETY DEVICE FOR WORKMAN'S BASKET
Edward V. Garnett, 2300 E. 40th Ave., Denver, Colo. 80205
Filed June 13, 1966, Ser. No. 556,998
10 Claims. (Cl. 182—2)

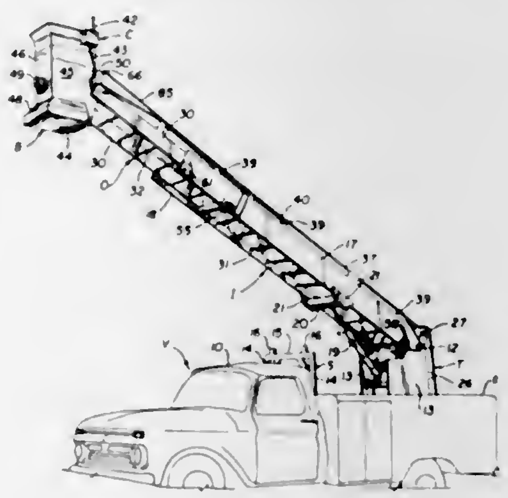

A line means, such as a cable, having one end connected to a workman's operating support and the opposite end movable with a portion of an extending and retracting device for an outer section of a ladder which is extended and retracted with respect to an inner section, such portion of the extending and retracting device being movable in the opposite dirction. A motion opposing device, such as a shock absorber, prevents the workmen's support from suddenly tipping, in the event of breakage of the cable. Also, a hollow hand rail forms a guide for a portion of the cable which maintains the workman's support in vertical position. Additional details of the extending and retracting device are also disclosed.

3,396,815
LADDER WITH TRANSPORT WHEELS
Frederick M. Gleockler, Cherry Hill, N.J. (Road 1, Ridgely, Md. 21660)
Filed Mar. 17, 1967, Ser. No. 623,919
2 Claims. (Cl. 182—17)

A ladder having a pair of wheel connected to the lower end of one ladder stile and disposed on opposite sides of the plane of the ladder, spaced therefrom and parallel thereto, on which the ladder can be readily transported or moved without lifting by tilting the ladder, while in an upright position, about the axis of the wheels and parallel to the plane of the ladder for elevating the other ladder stile and so that the weight of the ladder will be disposed over the wheels. The other ladder stile having a foot

member extending laterally from its lower end and terminating in alignment with one of the wheels to func-

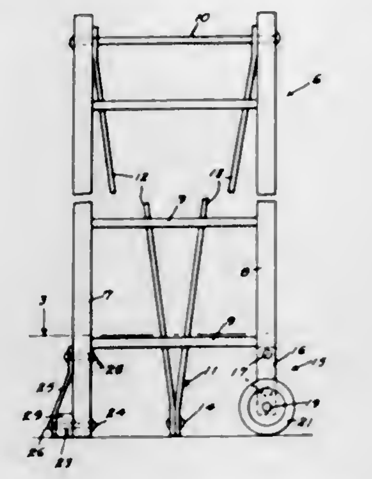

tion with said wheel as foot members on which the ladder rests when in a normal inclined position for use.

3,396,816
APPARATUS FOR USE IN PICKING TREE-GROWN FRUIT
George D. Kennedy, 4415 Ocean Beach Blvd., Cocoa Beach, Fla. 32931
Continuation-in-part of application Ser. No. 576,269, Aug. 31, 1966. This application Dec. 18, 1967, Ser. No. 691,511
6 Claims. (Cl. 182—49)

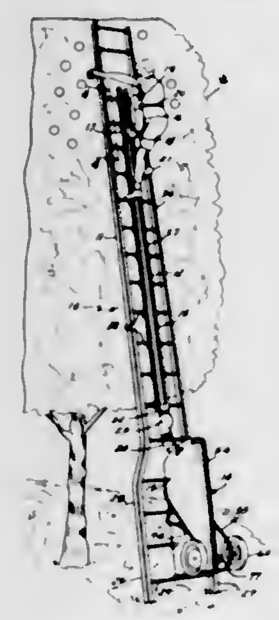

A wheeled fruit hauling device is used in conjunction with a ladder that is equipped with a chute for conveying tree-grown fruit picked from the ladder to a container component of the device. The ladder is equipped with a cradle section for supporting the device as the container is being filled and the chute has a section which is suspended from the worker and slidable on a trough component of the chute. Means for reducing the speed of descent of the fruit is provided in the chute and the container component is suspended for pivotal movement from the frame component device to facilitate dumping its contents.

3,396,817
ADJUSTABLE SCAFFOLD
Eugene D. Perry, Mooresville, Ind., assignor to Perry Manufacturing, Inc., Indianapolis, Ind.
Continuation-in-part of application Ser. No. 330,700, Dec. 3, 1963. This application Nov. 25, 1966, Ser. No. 597,020
11 Claims. (Cl. 182—187)

1. Adjustable scaffolding, of a type which includes:
a platform;
a vertically extending leg;
means supporting said platform for guided movement with respect to said leg;
releasable latch means operatively co-operating between the platform and the leg to releasably secure a selected position of the platform with respect to the leg;
the latch means including holdingly co-operating means operatively carried by each of said platform and said leg;
means for releasing said co-operating means from holding relationship;
and spring-pressure means biasing said latch means into holding relationship;

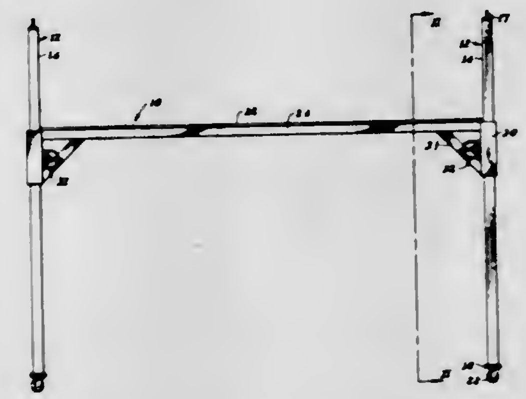

the improvement, to said type of scaffolding, comprising the latch means including an axially-movable pin means, and support means operatively connected to said platform and supportingly guiding the said pin means for axial movement, there being provided releasable co-operative first and second holding means associated respectively with the platform and the pin means for retaining the said pin means in latched position when the said first and second holding means are operatively engaged with one another, said first and second holding means being of a type which are releasable by a force applied laterally of the axis of the said pin means.

3,396,818
ANIMAL STAND
Edward L. Moragne, 4723 Nenana Drive, Houston, Tex. 77035
Filed Feb. 27, 1967, Ser. No. 618,940
4 Claims. (Cl. 182—187)

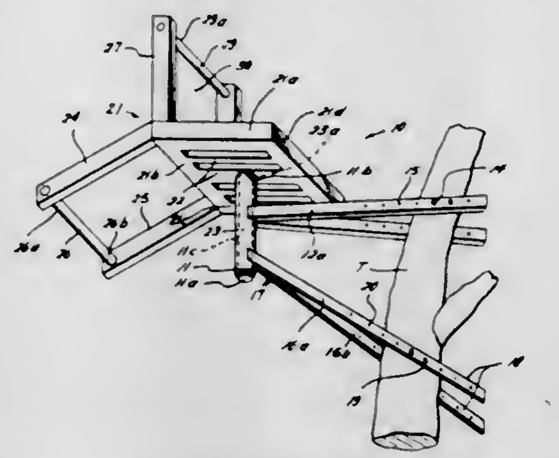

A device for positioning in a tree to enable individuals to hunt animals, utilizing a vertically positioned base with a first and second pair of support arms secured at one end to the base and at the other end to the tree. A seat is provided with a vertical, downwardly extending member which is telescopically received in the base to enable the seat and vertical extending member to be arcuately pivoted or turned relative to the tree and base for enabling the individual in the stand to obtain a better peripheral vision for hunting.

3,396,819
LUBRICATION OF CONNECTING ROD BIG-END BEARINGS
Allan S. Baxter, Joseph F. Warriner, and Peter M. Jeffery, Lincoln, England, assignors to Ruston & Hornsby Limited, Lincoln, England, a company of Great Britain
Filed Nov. 1, 1965, Ser. No. 505,885
Claims priority, application Great Britain, Nov. 7, 1964, 45,484/64
6 Claims. (Cl. 184—6)

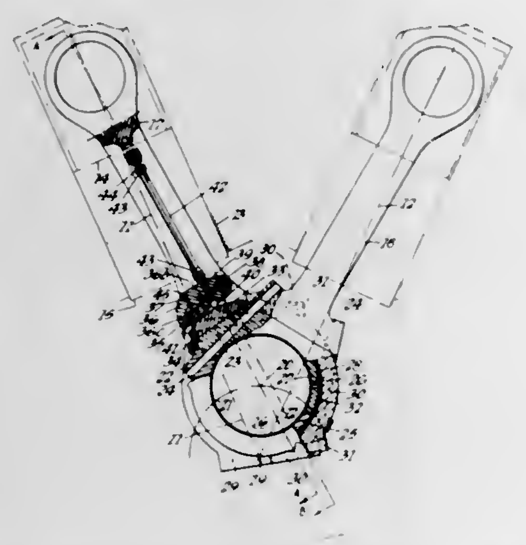

In the lubrication of undirectionally loaded bearings between the crank pin of a reciprocating piston engine and the large end of a connecting rod, a cam and follower mechanism between relatively oscillating parts relieves the bearing load to allow entry of lubricant.

3,396,820
FOOD CONVEYING APPARATUS FOR AIRCRAFT
Ronald W. Kenny, 635 Southborough, West Vancouver, British Columbia, Canada
Filed June 6, 1966, Ser. No. 555,396
18 Claims. (Cl. 186—1)

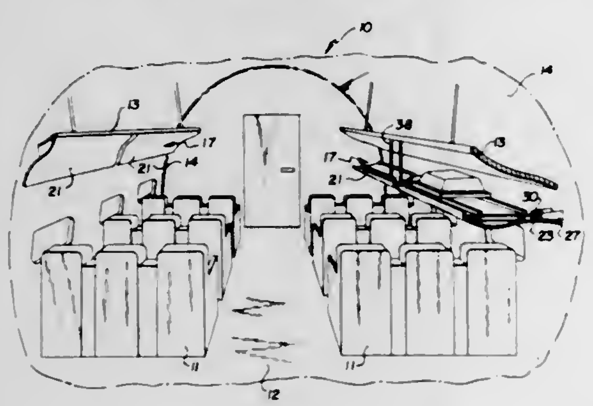

The conveying apparatus is designed to be placed in an aircraft where it is not in the way of passengers getting into and out of their seats, or persons using the aisle of the craft; and the apparatus includes track means for moving trays therealong, and means for releasably retaining the trays on the track means without danger of the trays being accidentally displaced therefrom.

3,396,821
ELEVATOR SAFETY RAIL AND DOOR CONTROL
George W. Weiford, Jr., Medford Lakes, N.J. 08055
Filed June 9, 1967, Ser. No. 644,993
3 Claims. (Cl. 187—52)

The combined safety rail and door control for an elevator is designed to be accessible from both outside and within an elevator cab to provide a safety support for elevator passengers departing or entering the cab. The safety rail mounting unit encloses a double acting switching circuit for paralleling an elevator door control cir-

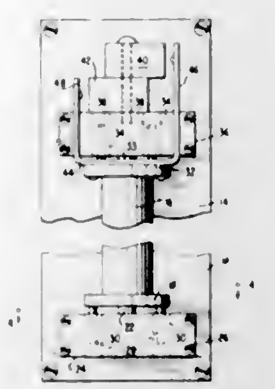

cuit and facilitates operation thereof by a rail capable of affording support for a passenger.

3,396,822
DRAWBRIDGE
Nicholas R. Guilbert, Jr., Glenside, Pa., assignor to Guilbert, Incorporated, Philadelphia, Pa., a corporation of Pennsylvania
Filed Mar. 2, 1967, Ser. No. 620,002
9 Claims. (Cl. 187—98)

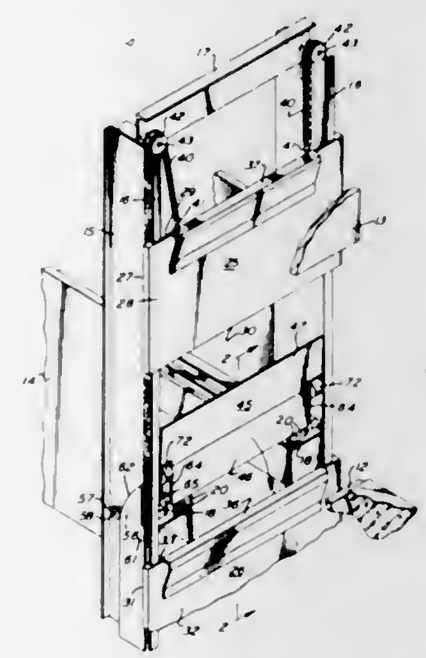

A drawbridge for dumbwaiters and elevators hingedly carried by the car with positive cam control on the car for elevating the drawbridge and auxiliary elevating and closing rollers on the drawbridge for car door engagement.

3,396,823
VARIABLE LOAD BRAKE
Edward J. Simanek, Homewood, Ill., and Mario Martini, Munster, Ind., assignors to Amsted Industries Incorporated, Chicago, Ill., a corporation of New Jersey
Filed Oct. 12, 1966, Ser. No. 586,100
7 Claims. (Cl. 188—56)

In a variable load tread brake rigging for railway cars having a body resiliently supported on wheel and axle assemblies, two power levers are pivotally suspended intermediate their ends from a car body on opposite sides of a wheel. Brake shoes on opposite sides of the wheel are mounted for movement toward and away from the wheel to frictionally engage the tread surface. A surface on one end of each lever is in sliding engagement with its

respective shoe. The other end of each lever is pivotally connected to an air cylinder for pivotal movement of

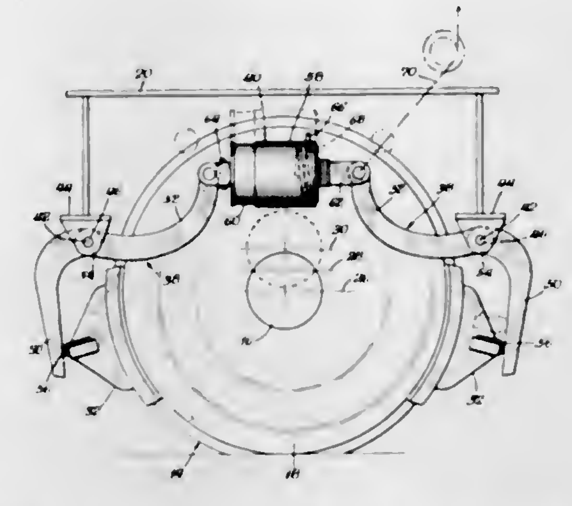

the lever to frictionally engage the brake shoes against the wheel's tread surfaces.

3,396,824
DISK BRAKE WITH AXIAL DISPLACEMENT LIMIT MEANS FOR BRAKE SHOES
Ernst Meier, Frankfurt, Germany, assignor to Alfred Teves, Frankfurt am Main, Germany, a corporation of Germany
Filed Oct. 24, 1966, Ser. No. 589,000
Claims priority, application Germany, Dec. 4, 1965, T 29,944; Mar. 25, 1966, T 30,759
5 Claims. (Cl. 188—73)

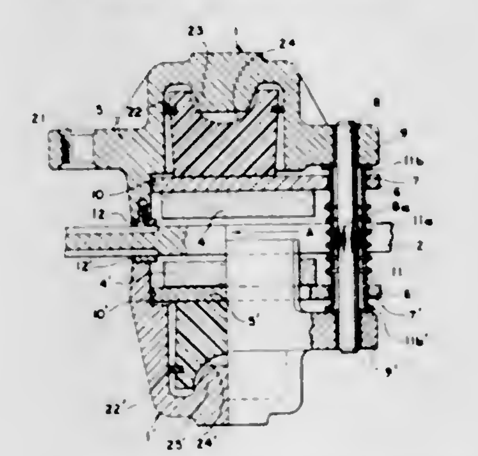

Disk brake with two brake shoes held in position within a yoke-shaped housing by a removable pin whose withdrawal facilitates extraction of these shoes from the housing; the pin is surrounded by a tubular spring which interconnects the brake shoes and forms resilient stops to limit the axial displacement thereof toward the respective disk faces.

3,396,825
CONTINUOUS BRAKE SYSTEM WITH THE AID OF A HYDRODYNAMIC CIRCULATORY SYSTEM
Friedrich Rückert, Waiblingen, Germany, assignor to Daimler-Benz Aktiengesellschaft, Stuttgart-Untertürkheim, Germany
Filed June 17, 1966, Ser. No. 558,421
Claims priority, application Germany, June 18, 1965, D 47,535
20 Claims. (Cl. 188—90)

A continuous brake system, especially for commercial-type vehicles, in which a gear drive producing a gearing-up ratio, that is an overdrive, is arranged at the axle drive bevel gear or spur bevel gear of a differential assembly preferably associated with an axle, which gear drive is drivingly connected with the pump wheel of a conventional hydrodynamic brake, whose stationary reactor wheel is formed by a sidewall extending radially to the brake axis of the non-rotating brake housing, that is separate from the differential housing, the brake housing being provided with an internal space enclosed by a rigid partition or intermediate wall which accommodates the pump wheel and the stationary reactor wheel formed by the lateral wall, and in which a pump is arranged in the circulatory sys-

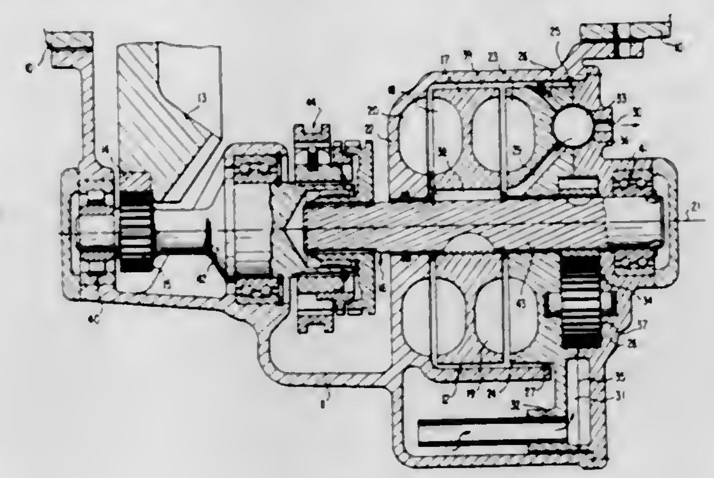

tem of the coupling liquid. The intermediate wall is formed by an inner wall containing the supply and discharge lines for the fluid chamber of the brake and an outer wall with the fluid pump and control valve being arranged in spaces generally bisected by the connecting plane between the inner and outer walls.

3,396,826
ELECTRIC MOTOR CONTROL AND CLUTCH
Edward C. Warrick and Edward J. Niehaus, Jr., Pittsburgh, Pa., assignors to Rockwell Manufacturing Company, Pittsburgh, Pa., a corporation of Pennsylvania
Filed Oct. 8, 1965, Ser. No. 494,168
13 Claims. (Cl. 192—.02)

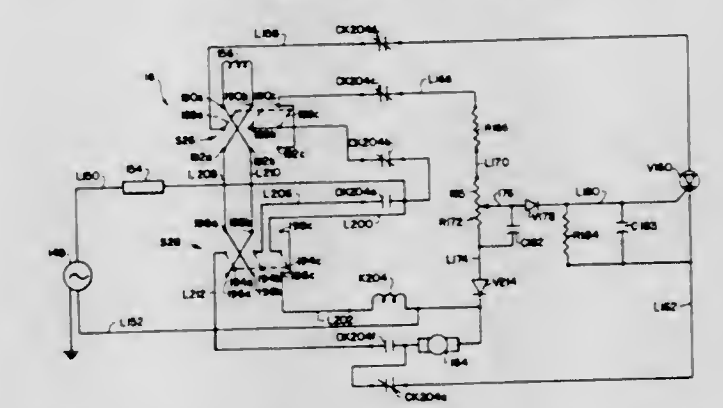

Power drive units for machine tools and the like including an electric motor, a speed control system capable of maintaining the motor speed at a selectively adjustable level despite changes in the load on the motor and including arrangements for reversing the direction of motor rotation and for bypassing the speed regulating circuitry to operate the motor at a higher speed, and an arrangement including a selectively engageable clutch which can be adjusted to slip at selectively variable torques for drive-connecting the motor to the device with which it is associated.

3,396,827
TACTILE KEYBOARD
Edward M. Harwell, Houston, Tex., assignor to Litton Business Systems, Inc., a corporation of New York
Continuation of application Ser. No. 224,641, Sept. 19, 1962. This application Apr. 25, 1966, Ser. No. 545,166
12 Claims. (Cl. 197—98)

1. A keyboard: comprising
a first plurality of keys each having disposed thereon tactile identification indicia in the form of a pair of spaced surface deformations;

a second plurality of keys each having disposed thereon tactile identification indicia in the form of a continuous elongated surface deformation;
a plurality of home keys each having disposed thereon special tactile identification indicia;
a plurality of other keys;
said first plurality of keys, said second plurality of keys, said plurality of home keys, and said plurality of other keys all being disposed in an array including at least three side by side ordinally arranged columns of at least nine keys each, said nine keys in each of said columns being respectively representative of the digits "1" through "9," at least a majority of the keys in each of said columns having tactile identification indicia disposed thereon, with at least one of said home keys disposed in a first one of said columns and with all the other keys upon which there are disposed tactile identification indicia in said first one of said columns arranged with their tactile identification indicia disposed along first imaginary and parallel lines, with at least one of said home keys disposed in a second one of said columns and with all the other keys upon which

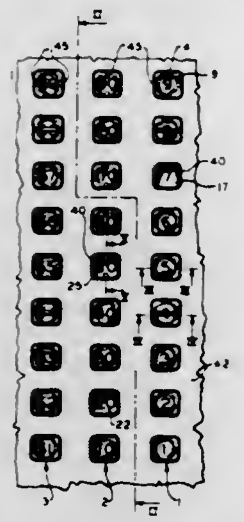

there are disposed tactile identification indicia in said second one of said columns arranged with their tactile identification indicia disposed along second imaginary and parallel lines which are at an angle with respect to said first imaginary and parallel lines, and with all the keys upon which there are disposed tactile identification indicia in a third one of said columns arranged with their tactile identification indicia disposed thereon in a manner and along imaginary lines corresponding to that of said first one of said columns of keys;
said second column of keys being disposed between said first and said third columns of keys;
none of said keys in said side by side columns of keys being disposed adjacent another key in the same column having the same tactile identification indicia thereon;
none of said plurality of other keys being disposed adjacent any other of said plurality of other keys in any one of said side by side columns;
the disposition of said keys having tactile indicia and said home keys in said array being such that the operator of the keyboard may locate his fingers thereupon and with respect to particular digits by tactile sensation.

3,396,828
RIBBON CARTRIDGE
Edson G. Moshier, Jamesville, and Floyd H. Canny, Syracuse, N.Y., assignors to SCM Corporation, New York, N.Y., a corporation of New York
Filed Feb. 17, 1966, Ser. No. 529,608
11 Claims. (Cl. 197—151)

A ribbon cartridge for typewriters or like business machines having a pair of ribbon spools and a member rigidly joining the spools. Each spool has a hub for supporting a ribbon and a cup for enclosing the ribbon, the cup being rotatably supported on the hub. The joining member has a portion rigidly anchored to each hub to prevent rotation thereof and a center portion severable from each hub portion, the center portion having a pair of recesses therein to receive a projection from each cup to prevent

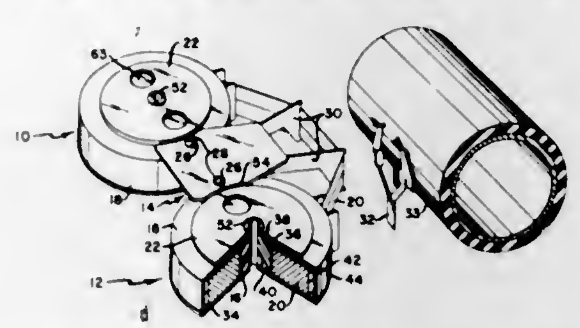

rotation of the cups relative to the hub. The joining member has a pair of arms extending therefrom to tautly project the ribbon a distance from the spools for inserting the ribbon in a typewriter ribbon vibrator. After the ribbon has been inserted in the vibrator, the center portion is broken away from each hub portion thereby making the hub rotatable relative to the cup and the spools may be installed in the typewriter for normal use.

3,396,829
RECORDER WITH RIBBON-INKING ATTACHMENT
John P. Knight, P.O. Box 364, Detroit, Mich. 48221
Filed Nov. 12, 1965, Ser. No. 507,445
5 Claims. (Cl. 197—171)

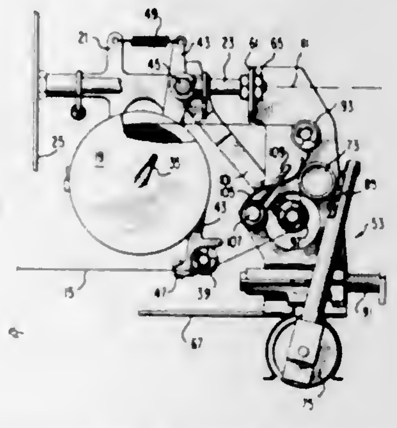

A ribbon-winding and -inking assembly in a recorder having movable type, in which the ribbon moves up and down between printing and nonprinting positions, comprises a ribbon spool that supplies ribbon to a guide roller, and thence about an inking roller to a smoothing roller, whence the ribbon proceeds about a positioning roller and then past the printing position. The spool and smoothing roller and positioning roller are vertically swingable about a horizontal axis to raise and lower the ribbon, but the inking roller does not move vertically. The use of the smoothing roller in addition to the positioning roller makes it possible to dispose the ribbon in a peripheral contact of substantial extent about the inking roller, and the arrangement and movements of the spool and rollers keep the ribbon from folding over on itself.

3,396,830
APPARATUS FOR ORIENTING CYLINDRICAL ARTICLES
Howard S. Hoffman, Livingston, N.J., assignor to G & H Mechanical Laboratory, Inc., Brickyard Road, Wayne Township, N.J., a corporation of New Jersey
Filed May 12, 1967, Ser. No. 638,097
18 Claims. (Cl. 198—33)

An apparatus for receiving cylindrical articles having dissimilar reduced diameter ends and for delivering the

articles in a predetermined orientation from the apparatus. The articles are received from an infeeding passageway and into a determining position between a pair of rotatable members disposed in end-to-end relationship, one member a driver member rotatably actuated for a reciprocation cycle of one hundred eighty degrees forward and then returned to its original start position. A shoulder on the driver member is sized to engage the larger of the

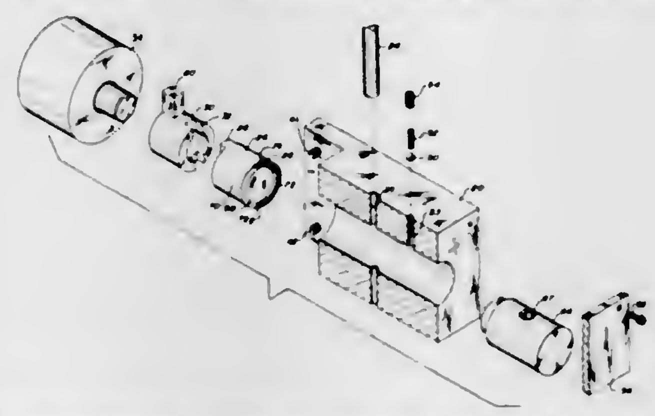

reduced diameter ends to turn the article when the article is in the unwanted orientation, whereas in the desired orientation, the shoulder slides by the smaller article end. The second member has a grooved end adapted to engage the main body of the article and to rotate with the article when it is rotated and to maintain the article in the orientated position when the article is not rotated by the driver member.

3,396,831
TYPOGRAPHIC MOLDS WITH COOLING MEANS
Stanley Gordon Scott, Redhill, and Charles John England, Smallfield, England, assignors to The Monotype Corporation Limited, London, England, a British company
Filed Mar. 6, 1967, Ser. No. 620,846
Claims priority, application Great Britain, Mar. 11, 1966, 10,875/66
8 Claims. (Cl. 199—91)

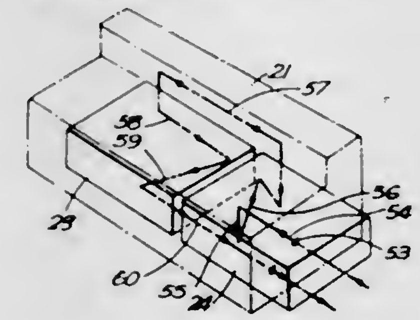

A type casting mold between two spaced side blocks rigidly secured to the base of the mold through which a molten inlet passes closer to one side block than the other. A movable blade ejects molded type when a slidable cross block opens one wall of the cavity. The side blocks include hard surfaced inserts which are replaceable without changing the side blocks. The base, side blocks, blade, slidable block and inserts are all water cooled to allow faster type casting and prevent uneven expansion and contraction of the mold.

3,396,832
CASE INSERT FOR THE STORAGE AND CARRYING OF HAIR FALLS
William Bloom, Cliffside Park, N.J., and Ernest M. Kelly, Jamaica, N.Y., assignors to Miner Industries Inc., New York, N.Y., a corporation of Delaware
Filed Oct. 2, 1967, Ser. No. 672,175
8 Claims. (Cl. 206—8)

A platform or case insert for carrying a hair fall has a base on which it may be disposed in an erect position either within or outside of a carrying case, a panel of foamed polystyrene or the like extending upwardly a substantial distance above the base and to which an end of a hair fall can be pinned, and a guide wall including an upwardly convex arcuate section extending from the upper edge of the panel to a depending flat section in parallel spaced relation to the panel so that the hair fall

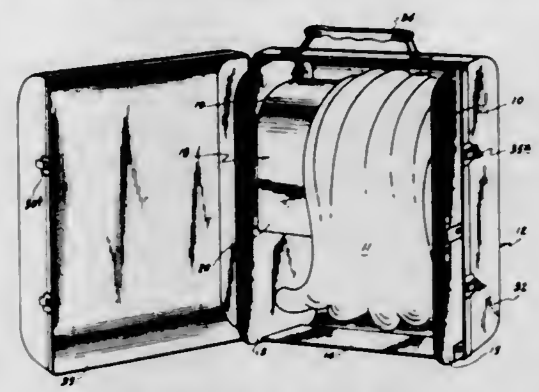

pinned at one end to the panel can be draped over the guide wall to occupy a vertical space much smaller than the length of the hair fall without disturbing the set thereof or permitting entangling of its hairs.

3,396,833
PACKAGE FOR NEEDLES OR THE LIKE
Karl-Heinz Deneke, Auf dem Rott, Gressenich, near Aachen, Germany
Filed Apr. 17, 1967, Ser. No. 631,437
Claims priority, application Germany, Apr. 22, 1966, 20 Mr 2,974; Oct. 29, 1966, R 33,820
7 Claims. (Cl. 206—46)

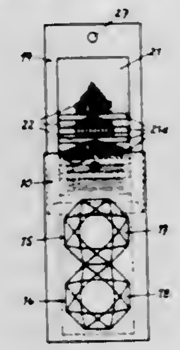

A needle package having a slide for retaining needles mounted for longitudinal reciprocation in an envelope having a longitudinal slot through which a tab on the rear of the slide extends for limiting the extent of movement of the slide.

3,396,834
CURTAIN RUNNER HOLDING DEVICE
Heribert Luckey, 61 Kolumbusstrasse, Mulheim-Neissen (Ruhr), and Franz Winkelmann, 13 Leuthenstrasse, Mulheim (Ruhr), Germany
Filed May 9, 1966, Ser. No. 556,795
Claims priority, application Germany, May 8, 1965, L 50,663
10 Claims. (Cl. 206—46)

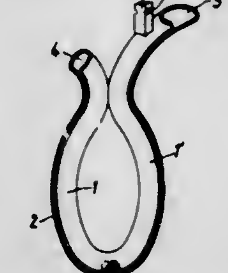

This invention provides a holding device for runners of hangings such as curtains onto which device the runners may be assembled and from which they can then be transferred onto the guide rail of the hangings. The holding device comprises a member of curved shape in the form of a longitudinally slotted tube having oppositely extend-

ing flanges and one end of the holding device being adapted to be so positioned in relation to a guide rail as to permit transfer of runners from the holding device to the guide rail.

3,396,835
YARN PACKAGING AND METHOD OF MAKING
Alexandre Boutonnet, Tassin, France, assignor to Societe Rhodiaceta, Paris, France, a corporation of France
Filed Dec. 20, 1966, Ser. No. 603,369
Claims priority, application France, Dec. 22, 1965, 43,389
7 Claims. (Cl. 206—46)

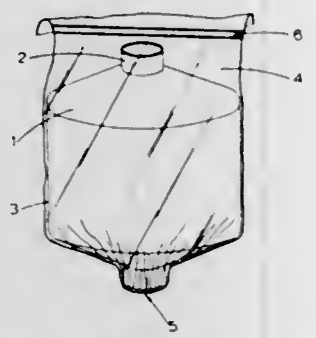

The present invention relates to a new textile yarn package of textile yarn wound on a rigid central support and a process for producing said package, more especially superposed yarns, e.g. man-made ones, arranged on a central support, e.g. bobbin, cone, pirn or cop, placed in a gas-tight plastic bag in which the pressure is below atmospheric, whereby handling and transport are facilitated.

3,396,836
HOLDER FOR GLUE COMPONENTS
George R. Cook, Rochester, N.Y., assignor to Cutler Mail Chute Company, Inc., Rochester, N.Y., a corporation of New York
Filed June 19, 1967, Ser. No. 646,833
8 Claims. (Cl. 206—47)

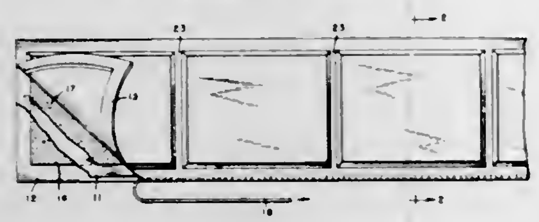

A holder for the mutually reactive components of a glue, such as that of an epoxy resin, has three overlying layers of liquid impervious tearable sheets. These sheets are mutually secured together along marginal edges forming two separate and distinct pockets. The pockets contain porous sheets of material, like gauze, impregnated with the components, respectively. Conventional tear strips may be provided to facilitate opening the pockets and removing the impregnated sheets of gauze which are used by overlaying them under pressure between members to be joined. The pressure is effective to blend the components in this state sufficient to cause the required typical chemical reaction which produces the final epoxy resin. Alternatively, the blending may be effected by the application of heat at about 200° C.

3,396,837
PRESSURE-SENSITIVE ADHESIVE MASKING TAPE HAVING POLYPROPYLENE FILM BACKING
Ambrose F. Schmelzle, White Bear Lake, and Charlotte I. Sauer, North St. Paul, Minn., assignors to Minnesota Mining and Manufacturing Company, St. Paul, Minn., a corporation of Delaware
No Drawing. Filed Mar. 16, 1964, Ser. No. 352,369
3 Claims. (Cl. 206—59)

1. A nonfibrous finger-tearable stretchable pressure-sensitive adhesive tape having an unplasticized unoriented polypropylene film backing coated with an aggressively-tacky pressure-sensitive adhesive, wherein said film backing has a thickness of approximately 3 to 4 mils and consists essentially of pigmented isotactic polypropylene which has a melt flow value in the range of 1 to 10, containing approximately 2 to 20% total dispersed pigment which opacifies the film and substantially modifies physical properties, said film having been compounded and melt-formed in such manner that it is readily finger-tearable, has an elongation at break of over 100% and a tensile strength of at least 10 pounds per inch width at a 500% per minutes strain rate, and an elongation at break in the range of 10 to 50% at a 5000% per minute strain rate.

3,396,838
COMPOSITE MASKING AND TRIM TAPE
Franklin A. Hawthorn, Houghton, Wash.
(148 102nd Ave., SE., Bellevue, Wash. 98004)
Filed Aug. 7, 1964, Ser. No. 388,248
5 Claims. (Cl. 206—59)

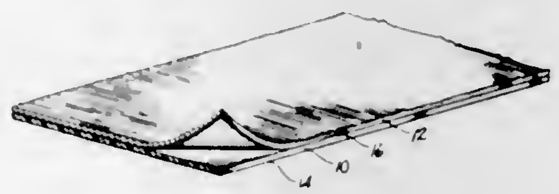

A composite decorative tape useful for presenting a trim uniform width boderline between two areas to be coated such as the bottom and sides of a boat. The long length of tape can be made up in roll form with the decorative surface of the trim tape protected by a strip of masking tape which overlies the length and width of the decorative surface. A removable bonding adhesive is used between the masking tape and the trim tape to seal the decorative surface excluding entry of paint or other liquids between the tapes. A more permanent bonding adhesive bonds the trim tape to the supporting surface such that after the composite tape is in place and the areas adjacent to its have been coated, the masking tape portion can be removed without removing the trim tape portion.

3,396,839
PACKAGING APPARATUS
Suel Grant, Shannon, and Norwood Claude Graeff, Harrisburg, Pa., assignors to AMP Incorporated, Harrisburg, Pa.
Filed June 15, 1966, Ser. No. 557,678
3 Claims. (Cl. 206—63.2)

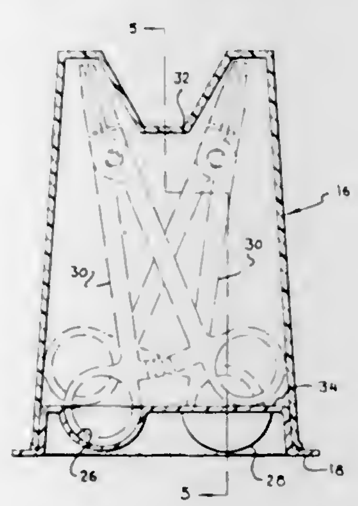

An article is provided for packaging surgical instruments or the like. The package consists of a base member which supports the instruments and serves as a stand, a cover encloses the instruments and mates with the base member, and an outer bag capable of maintaining the instruments in a sterile condition.

3,396,840
REEL STORAGE CONTAINER
Paul L. Farren, 5603 S. Rice, Houston, Tex. 77036
Continuation-in-part of application Ser. No. 526,262, Feb. 9, 1966. This application Mar. 23, 1966, Ser. No. 536,760
5 Claims. (Cl. 206—65)

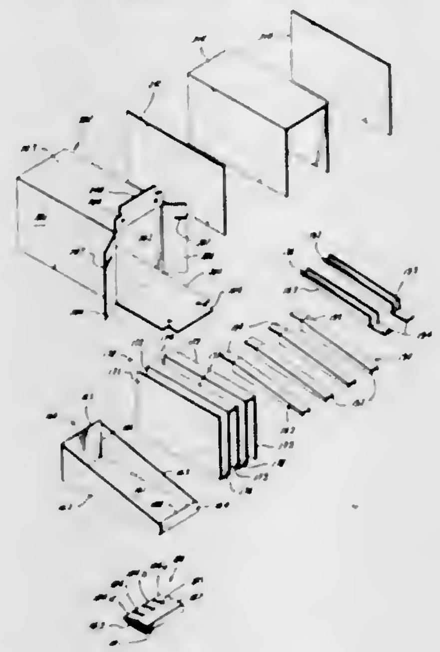

Combination shipping and storage container for tape reels, including a tray slidably receivable within an outer container. The tray is partitioned with each partitioned area adapted to receive in an inclined manner more than one reel. Ramp elevating means are provided so as to so elevate the tape receiving surface of the tray, packing is provided adjacent the top of the reels to secure them for shipment.

3,396,841
READILY OPENABLE PACKAGE ASSEMBLY
Bruce G. Copping, Akron, Ohio, assignor to Geo. J. Meyer Manufacturing Co., Cudahy, Wis., a corporation of Ohio
Filed Nov. 14, 1966, Ser. No. 594,125
3 Claims. (Cl. 206—65)

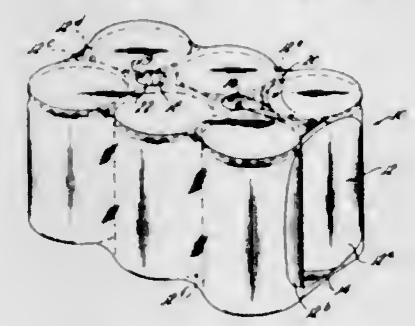

This invention relates to a carrier and/or package assembly, and particularly to such assemblies and to packaging means for a plurality of cylindrical articles, such as cans.

3,396,842
CONTAINER PRESSURE TESTING APPARATUS
Eldred W. Bowen, Brentwood, Mo., and Joseph A. McAfee, Bryan, Ohio, assignors to Pet Incorporated, a corporation of Delaware
Filed May 31, 1966, Ser. No. 553,759
7 Claims. (Cl. 209—73)

Apparatus for testing the sufficiency of pressurization of containers after the pressurizing operation to determine the correctness of the pressurizing operation and including means to effect rejection of "soft" containers while permitting containers having the minimum desired pressurization to pass through. The apparatus also includes

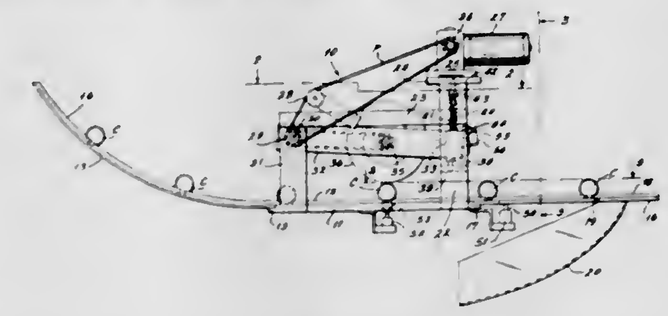

means for conveying or guiding the containers in a rolling attitude and without appreciably interfering with the continuous movement of the rolling containers through the testing zone.

3,396,843
LAZY TONG ADJUSTABLE SORTING MACHINES
Kenneth M. Allen, P.O. Box 352, Newberg, Oreg. 97132
Filed Dec. 9, 1965, Ser. No. 512,726
9 Claims. (Cl. 209—104)

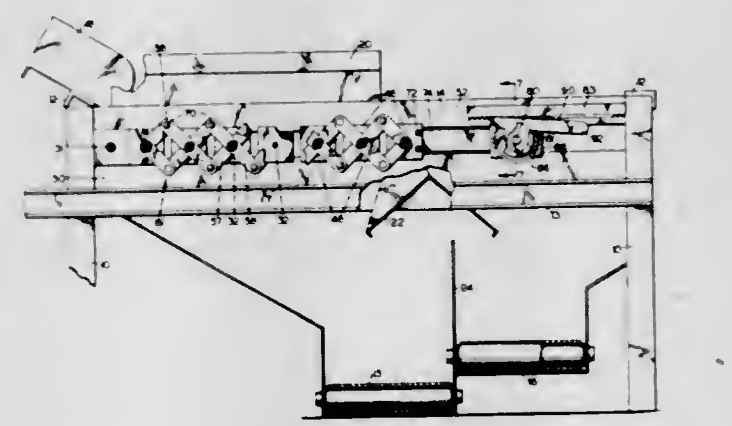

A machine for sorting as to size articles such as potato chips includes a plurality of discs, parallel shafts and spacer sleeves on the shafts frictionally engaging the discs. The shafts are mounted in bearings carried by guide blocks slidable along guideways by a pair of lazy tongs connected to the blocks and are extended or contracted by a pair of pinions on an end shaft secured to the free ends of the lazy tongs when the pinions are rotated along a pair of racks. The racks and pinions keep the movements of the lazy tongs the same to prevent binding. A tensioned cogbelt held in engagement with geared pulleys on the shafts by pairs of rollers on alternate guide blocks is driven to rotate the shafts. In FIGS. 5 and 8, the tubular spacers are angular in transverse cross-section to facilitate feeding articles across the shafts.

3,396,844
VORTICAL SEPARATOR
Robert G. Millhiser, Detroit, Mich., and Warren W. Wooll, Jr., San Diego, Calif., assignors to Ajem Laboratories, Inc., Livonia, Mich.
Filed May 20, 1964, Ser. No. 368,925
16 Claims. (Cl. 209—211)

1. Apparatus for the separation of particulate matter by means of a swirling liquid vortex in which relatively smaller or less dense separated particulate matter can be removed from adjacent the top outer peripheral regions of the vortex and relatively larger or more dense separated particulate matter can be removed from adjacent the bottom central core area of the vortex comprising a vessel

having a generally cylindrical vertical side wall substantially straight along its entire length and a substantially flat base for containing the liquid vortex, the height of said side wall being about one and one-half times the width of said base, said side wall having along its upper edge a vertically aligned weir over which liquid from the vortex containing suspended relatively smaller or less dense separated particulate matter can overflow, baffle means adjacent said weir extending inwardly toward and downwardly into the vortex to control the flow of liquid containing particulate matter over said weir, an orifice in said base substantially in the central area thereof on the

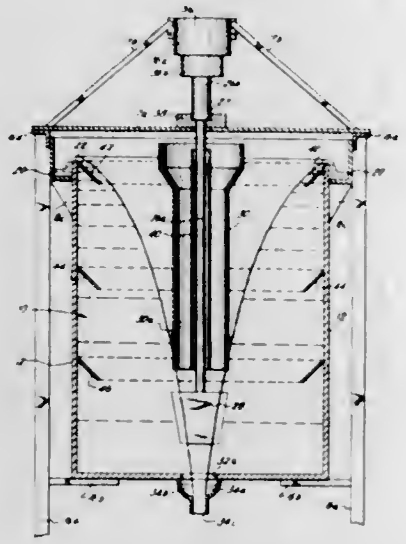

axis of the vortex through which liquid from the vortex containing relatively larger or more dense separated particulate matter can pass and be discharged from said separation apparatus, rotatable paddle means to generate said vortex having its axis of rotation substantially coincident with the axis of the vortex, drive means for rotating said paddle means, means for charging particulate matter to be separated to the vortex extending into the core of the vortex, and means for charging liquid to the vortex whereby the liquid volume thereof can be maintained substantially constant and the amount of liquid overflowing over said weir can be controlled.

3,396,845
WATER CONDITIONING SYSTEM
Frederick M. Bouskill, South Bend, Ind.; St. Joseph Bank and Trust Co., and June S. Bouskill, representatives of said Frederick M. Bouskill, deceased, assignors to June S. Bouskill
Filed June 18, 1964, Ser. No. 376,082
13 Claims. (Cl. 210—98)

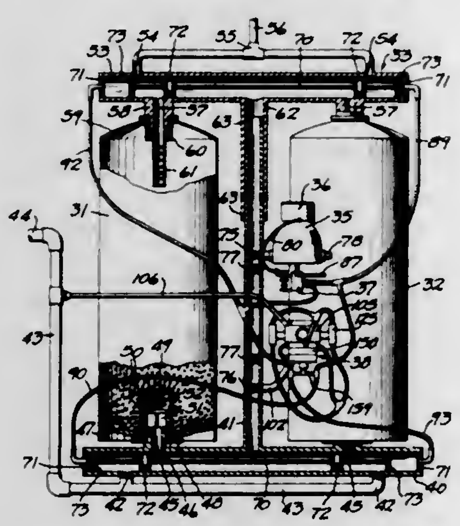

1. A water conditioning system comprising
a pair of tanks containing granular material and each having a port at its upper and lower ends,
upper and lower hydraulically actuated reversing valves connected at said lower and upper ports,
outlet means connected to said lower valve,
water inlet means connected to said upper valve for flow to and downwardly through a selected tank only and to said outlet, as determined by the setting of said reversing valves,
a meter for measuring flow through said inlet means,
drain means connected at said upper valve,
an alternator valve driven by said meter and connected to said upper and lower reversing valves having means to substantially simultaneously reverse the settings thereof and alter the flow path from said inlet means to said outlet means in response to a predetermined volume of flow in said inlet, thereby alternating the connection of said tanks in said inlet-to-outlet flow paths, and
a regenerator control unit connected with a source of regenerating liquid and with said lower valve and responsive to actuation of said alternator valve for controlling delivery to said drain of regenerating liquid following upflow through the tank not connected with said outlet.

3,396,846
CONTROL OF OIL-WATER INTERFACE
Ellis W. Hamilton, La Habra, Calif., assignor to Gulf Oil Corporation, Pittsburgh, Pa., a corporation of Pennsylvania
Filed May 17, 1966, Ser. No. 550,678
3 Claims. (Cl. 210—76)

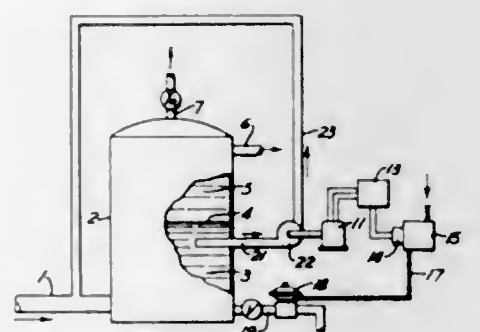

Apparatus for maintaining the desired interface level between immiscible fluids of different densities within a separator in which the difference in the electrical energy required to rotate a mechanical element in the two fluids is used to derive an electrical signal controlling a valve in an outlet line from the vessel.

3,396,847
FILTERING APPARATUS ADJUSTABLE FOR SERIES OR PARALLEL FILTRATION
Julius L. Englesberg, 123 Knollwood Road, Rockville Centre, N.Y. 11570
Filed Jan. 13, 1967, Ser. No. 609,182
7 Claims. (Cl. 210—85)

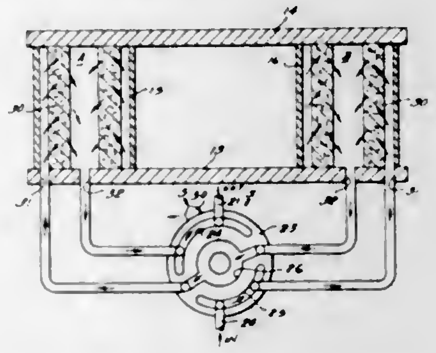

Apparatus comprising two filter chambers, and a valve incorporated within the base of the apparatus for selec-

tively directing liquid to be filtered through both chambers simultaneously, or through the chambers in succession in either direction. Valve is a rotatable circular disk formed with channels in one face for selectively communicating with the inlet and outlet ports of the chambers and the liquid supply and exhaust ports of the apparatus.

3,396,848
PLASTIC-METAL VALVE
James A. Kozel, Franklin, Mich., assignor to American-Standard Inc., a corporation of Delaware
Filed Aug. 20, 1964, Ser. No. 390,899
2 Claims. (Cl. 210—137)

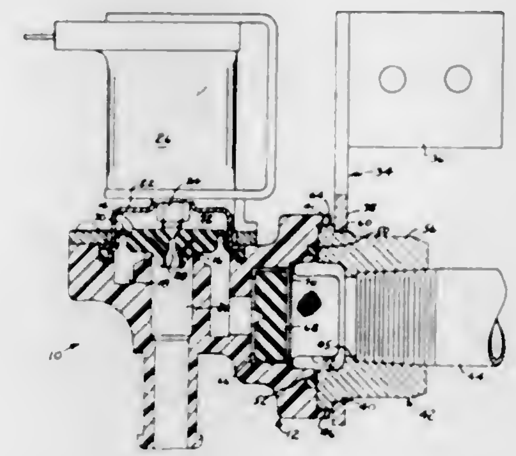

2. In combination: a plastic valve body having a face thereof provided with a pocket constituting an inlet chamber for the valve body; said pocket having a back wall formed with a flow opening therein for conducting liquid from the inlet chamber; a resilient flow control member positioned in said pocket for deformation in the direction of the back wall to provide a substantially constant liquid flow through the chamber irrespective of substantial variations in liquid supply pressure; a retainer disposed within the pocket upstream of the flow control member to retain same in its operative position; a hat-like screen positioned in said inlet chamber upstream of said retainer to filter the liquid prior to its passage across the flow control member; an annular groove formed in said valve body face surrounding the aforementioned pocket; a tubular metal coupling member having a face thereof engaging said valve body face; a deformable gasket positioned in said groove in sealing engagement with the groove surface and coupling member face; mounting bracket means for the valve body comprising a first apertured portion adapted to seat on a mounting surface, and a second portion connected with the tubular metal coupling member; and securing devices extending between the bracket means and plastic valve body to draw the valve body tightly against the aforementioned face of the coupling member.

3,396,849
MEMBRANE OXYGENATOR-DIALYZER
Arnold J. Lande, Minneapolis, and Clarence Walton Lillehei, St. Paul, Minn., assignors to The Regents of The University of Minnesota, Minneapolis, Minn., a corporation of Minnesota
Filed May 10, 1966, Ser. No. 549,023
10 Claims. (Cl. 210—321)

A liquid-gas or liquid-liquid fluid exchange device for use as an oxygenator or dialyzer and comprising a stack of alternating membrane support plates and spacers separating the support plates and an elongated pleated membrane extending alternately around each support plate and spacer. The device is provided with channel means for introducing one fluid as a thin film on one side of the membrane in the space between two membrane layers and for introducing a different fluid on the other side of the

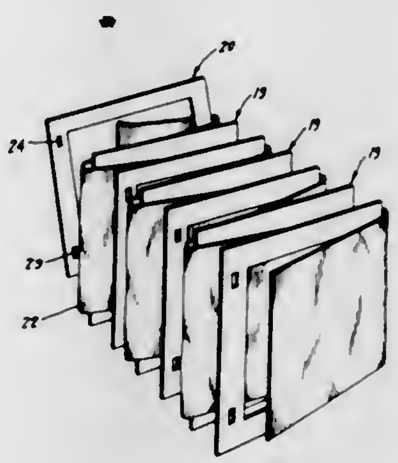

membrane in the space between the membrane and support plate and for discharging the fluids.

3,396,850
DEVICE FOR SEPARATION AND FRACTIONATION OF MATERIAL DISSOLVED OR SUSPENDED IN A LIQUID
Josef Kubát and Carel Pattyranie, Solna, Douglas Wahren, Roslags Nasby, Karl Erik Almin, Saltsjobaden, Olle Andersson, Solna, and Frans Johanson, Akersberga, Sweden, assignors to Rederiaktiebolaget Nordstjernan, Axel Johnson Institut for Industriforskning I Nynashamn, a corporation of Sweden
Filed Nov. 18, 1965, Ser. No. 517,491
Claims priority, application Sweden, Mar. 1, 1965, 2,634/65
23 Claims. (Cl. 210—322)

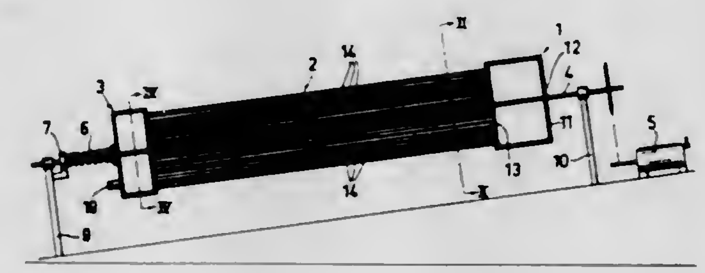

An apparatus for separation and fractionation of material dissolved or suspended in a liquid, which apparatus utilizes the accumulation effect obtained as a consequence of the relative motion between such liquid and a casing which encloses such liquid to achieve such fractionation and separation. Such apparatus comprises a casing consisting of at least one channel having an entrance end provided with means for obtaining flow through said channel by periodically admitting to the entrance, plugs of a liquid having material dissolved or suspended therein, said plugs being separated by quantities of another phase, and an end provided with a fraction-collector means for selectively collecting fractions of varying concentration obtained by the accumulation effect of each separated liquid plug.

3,396,851
SUPPORT BRACKET
Teddy J. Buckner, Warren, and Roy T. Collins, St. Clair Shores, Mich., assignors to General Motors Corporation, Detroit, Mich., a corporation of Delaware
Filed June 10, 1966, Ser. No. 556,633
1 Claim. (Cl. 211—13)

A support bracket for holding in place in an upright position a plurality of horizontally stacked sheet metal

panels in a transportable container wherein the panels are stacked between horizontal bars. The support bracket includes a clamping portion for attachment to the hori-

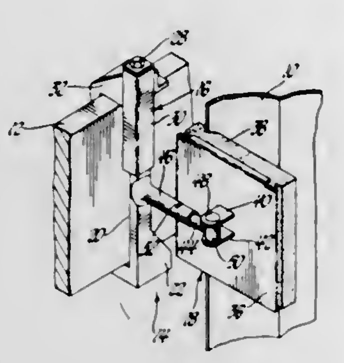

zontal bars and a contact portion universally pivotally connected to the clamping portion for supporting contact with the sides of the sheet metal panels.

3,396,852
DERRICK UNITS
Roy O. Balogh, Ladue, and Robert G. Bakula, Hanley Hills, Mo., assignors to McCabe-Powers Body Company, St. Louis, Mo., a corporation of Missouri
Filed Oct. 19, 1966, Ser. No. 587,826
23 Claims. (Cl. 212—35)

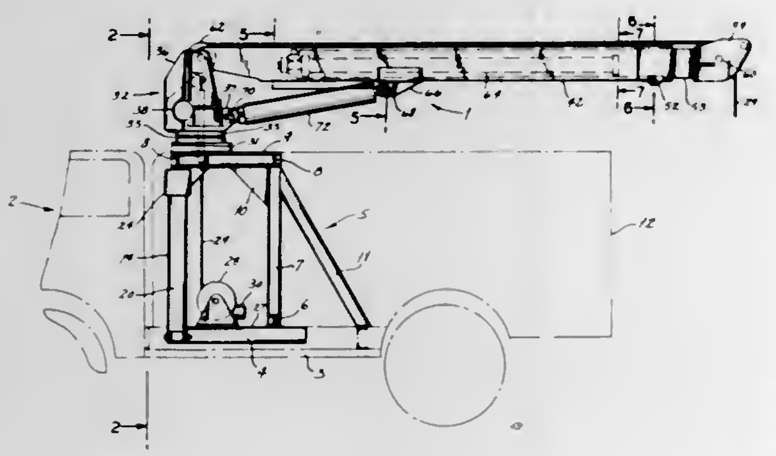

A derrick unit stabilized by outriggers and having a boom consisting of telescopic inner and outer beams, the former of which is pinned to a rotatable mast. The boom is elevated by an elevation cylinder having a barrel terminating at a valve block which is formed integral therewith and carries check valves and adjustable differential poppet valves, the latter of which normally block channels which bypass the check valves. Each differential poppet valve opens when the fluid pressure at the port in the valve block opposite the channel with which it is associated reaches a predetermined point or when the fluid pressure in the portion of the cylinder barrel communicating with it reaches a predetermined point. The outer beam is extended with respect to the inner beam by an extension cylinder having a valve block carried on and formed integral with the outer end of the piston rod, and contained within the valve block are a check valve and a pilot check piston which opens the check valve when the pressure at the opposite port in the valve block is elevated. The outriggers are raised and lowered by hydraulic outrigger cylinders each having a valve block carried on and formed integral with its piston rod. Each valve block contains pairs of check valves and pilot check pistons which function similarly to their counterparts in the extension cylinder.

3,396,853
BLONDIN CABLEWAY INSTALLATION
Giorgio Dettoni, Turin, Italy, assignor to Officine Meccaniche Agudio S.p.A., Milan, Italy, a company of Italy
Filed Feb. 14, 1967, Ser. No. 615,961
Claims priority, application Italy, Feb. 19, 1966, 14,700/66
5 Claims. (Cl. 212—121)

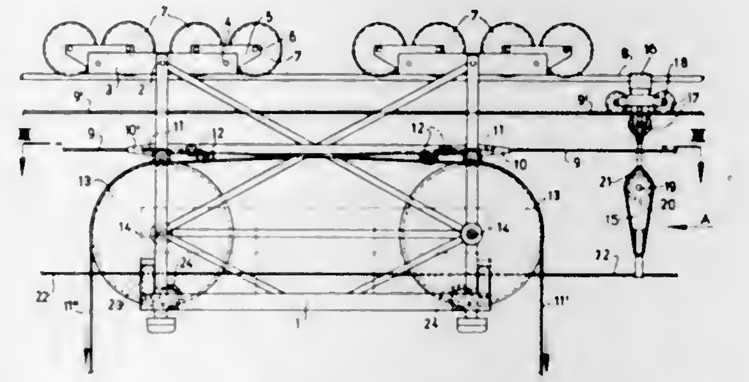

A Blondin cableway installation is disclosed having means, attached to the haulage rope, for keeping regularly spaced apart from one another the service ropes, the advantage being obtained of avoiding interferences.

3,396,854
OUTRIGGER STABILIZER FOR CRANES
Oris L. Crisp, Box 637, Heppner, Oreg. 97836
Filed June 19, 1967, Ser. No. 647,009
8 Claims. (Cl. 212—145)

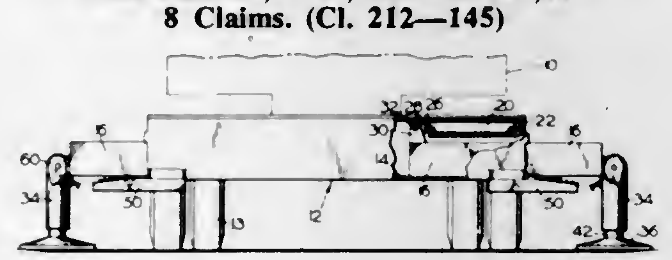

An outrigger stabilizer for cranes comprises a beam arranged for extension and retraction. A stabilizer leg with attached foot is pivoted to the end of the beam. Rack and pinion means raise and lower the leg and foot with retraction and extension of the beam.

3,396,855
APPARATUS FOR USE IN APPLYING REFRACTORY COATINGS TO REFRACTORY LININGS OF SMALL BASIC OXYGEN FURNACES
Raymond J. Demaison, Bronx, N.Y., assignor to Quigley Company, Inc., a corporation of New York
Filed Oct. 1, 1965, Ser. No. 492,167
13 Claims. (Cl. 214—1)

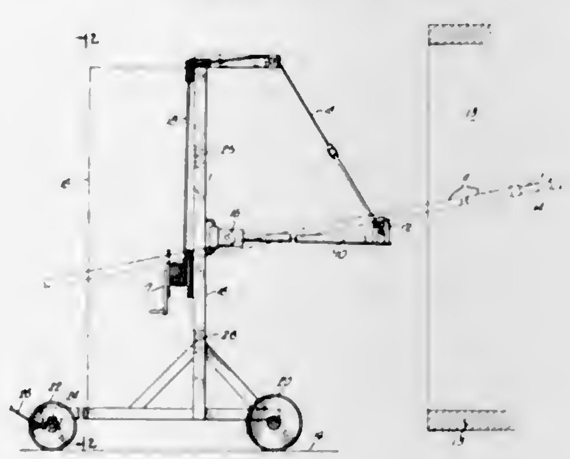

Said apparatus comprises a mobile protective shield of the heat deflecting type carrying a rigid support for a shooting pipe, said shield being constituted by vertical panel means formed with a vertical slot for passage of the shooting pipe, and said rigid support being constituted by a boom mounted on the outside of the protective shield by a universal mounting means, guide means in the form of a concave roller mounted on the outer end of the boom, and a hand operated winch located behind the protective shield and connected by cables to the outer end of the boom.

3,396,856
PRECISION DRIVE STRUCTURE FOR ROTATABLE MEMBER
John C. Diepeveen, Sunnyvale, Calif., assignor to Unitek Corporation, Monrovia, Calif., a corporation of California
Filed Oct. 10, 1966, Ser. No. 585,365
8 Claims. (Cl. 214—1)

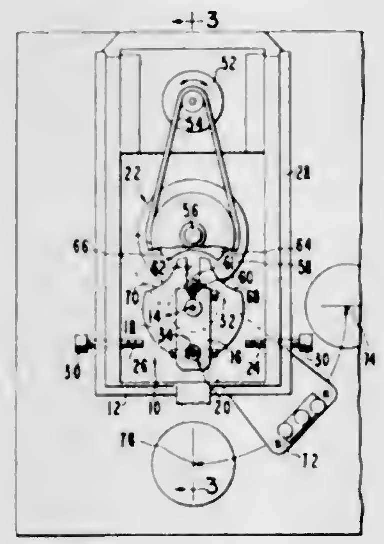

1. In combination: a pair of spaced members; means mounting said members for rotation about a common axis with said members being rotatable relative to each other; means coupled with one of the members for rotating the same in opposed directions along a predetermined path; spring means coupling said members together at a location spaced from said axis to permit the members to move normally together along said path and to allow movement of said one member through a limited distance along said path relative to the other member when said other member is stopped; and means adjacent to each end of said path for stopping said other member before said one member reaches the corresponding end of said path whereby said one member will move relative to the other member through at least a portion of said distance to the last-mentioned end of said path under the influence of said moving means.

3,396,857
STACKER DEVICE
Jon Brown, Garland, Tex., assignor to Maryland Cup Corporation, Owings Mills, Md., a corporation of Maryland
Filed Apr. 22, 1966, Ser. No. 544,529
10 Claims. (Cl. 214—6)

An auxiliary device is provided in association with a container filling machine for stacking filled containers discharged by the filling machine. The device is integrated with the machine and comprises means for elevating the filled containers one by one from apertures in a rotating loading wheel. As each container is sequentially elevated, a carrier mechanism engages the lowermost container and carries it together with any containers above it to a discharge station where a belt conveyor is disposed. The carrier is so programmed as not to release the container at the discharge station until a predetermined number of containers are in place forming a stack. Instead, it is returned to its initial position where another container is added to the stack from the bottom by the elevating means, the lowermost container of the stack

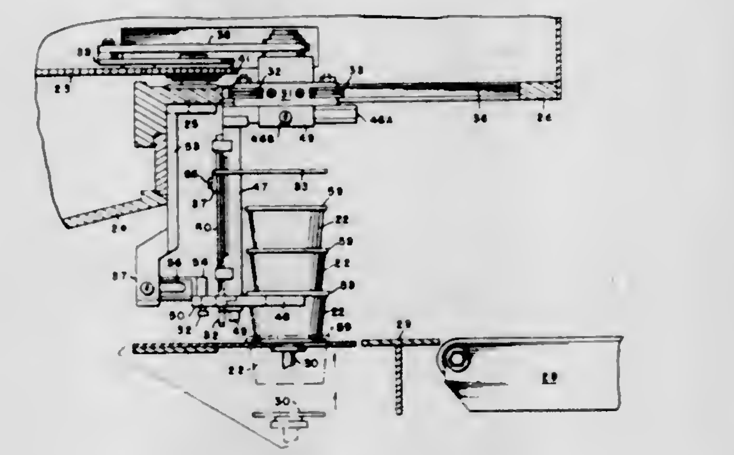

being released and re-engaged during this operation. This continues until a predetermined number of containers are in the stack, whereupon a final disengagement takes place to release the stack from the carrier and permit the entire stack to be discharged onto the belt conveyor.

3,396,858
LOAD HANDLING APPARATUS HAVING RETRACTABLE STABILIZING ARM
Silveus M. Baker, Arcadia, and Robert W. Smiley, La Canada, Calif., assignors to Royal Industries, Inc.
Filed Oct. 23, 1965, Ser. No. 502,865
2 Claims. (Cl. 214—38)

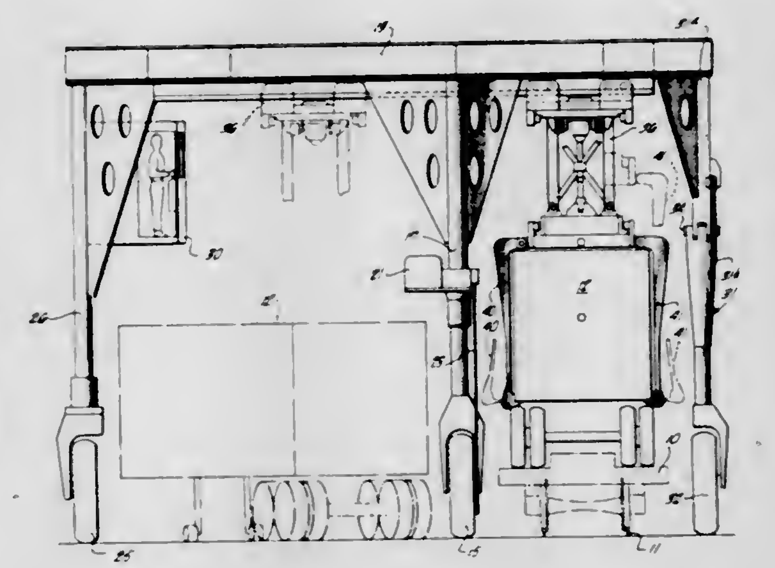

The apparatus of the invention comprises a frame-like structure for defining a self-powered vehicle that may be independently propelled adjacent a load by means of 3 or 4 wheels. The fourth wheel of the frame-like structure is mounted to a movable arm to allow the frame-like structure to be driven astride a load by means of the three wheels and then moving the arm over the load and into engagement with the ground to allow the load handling apparatus to be positioned over the load to be handled. The structure for the fourth wheel further functioning for balancing the frame-like structure during load handling.

3,396,859
METHOD AND APPARATUS FOR LOADING TRUCKS BY GRAVITY
Etienne H. Vincent, May-sur-Orne, France
Filed Jan. 19, 1966, Ser. No. 521,698
Claims priority, application France, Feb. 11, 1965, 5,100
10 Claims. (Cl. 214—41)

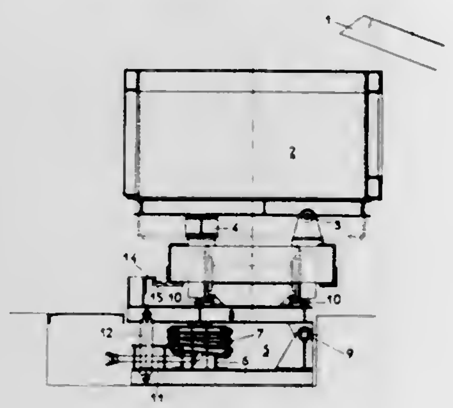

A method and an arrangement for loading ores or the like by gravity in the body of a railway truck, from hoppers or the like disposed laterally with respect to the track by means of inclining at least the body downwards and towards the hopper.

3,396,860
EXCAVATOR AND GRADER OR CRANE APPARATUS
Wallace J. Witwer, Waukesha, and Jay V. Wright, Menomonee Falls, Wis., assignors to Hein-Werner Corporation, Waukesha, Wis., a corporation of Wisconsin
Filed Apr. 12, 1966, Ser. No. 541,998
19 Claims. (Cl. 214—141)

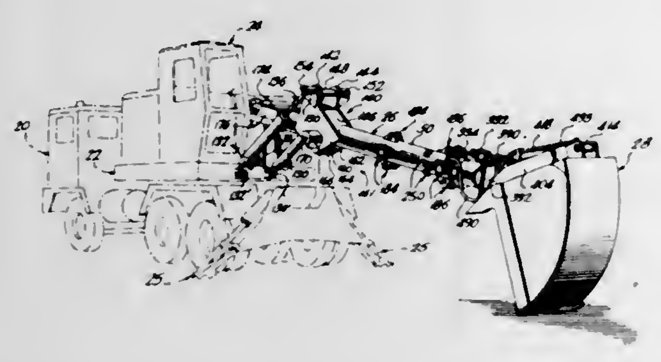

A telescoping boom is mounted on a mobile vehicle and includes inner and outer cylindrical boom members. Hydraulic ram means is pivotally interconnected with the outer boom member at either an upper connecting means or a lower spaced connecting means. Anti-friction means and guide means are provided to direct movement of the inner boom member. A suitable tool such as a shovel may be rotatably and pivotally supported at the outer end of the boom.

3,396,861
STRADDLE CARRIER VEHICLES
George A. A. Houlton, Newtownards, County Down, Northern Ireland, assignor to British Straddle Carrier Company Limited, Newtownards, County Down, Northern Ireland, a British company
Filed Dec. 10, 1965, Ser. No. 512,934
9 Claims. (Cl. 214—392)

A straddle carrier vehicle comprises a lower chassis and a relatively vertically movable upper chassis which in turn carries a relatively vertically movable lift assembly to engage the load. The lift assembly and the upper chassis are selectively individually movable relative to each other and

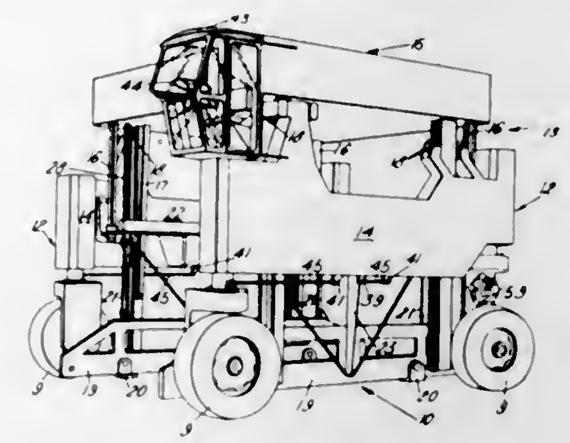

to the lower chassis. The operator's cab is mounted on the upper chassis for better visibility.

3,396,862
FORK LIFT TRUCK STRUCTURE
Leonard J. Fischer, R.R. 5, Shelbyville, Ind. 46176
Filed July 5, 1966, Ser. No. 562,582
3 Claims. (Cl. 214—620)

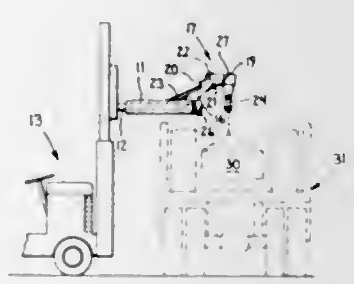

An overhang boom attachment having a pair of spaced horizontal tubes adapted to fit over the prongs of a fork lift truck, the tubes having their distal ends joined together by a cross member, the tubes and cross member cooperatively supporting a boom having a depending hook.

3,396,863
LATCH MEANS FOR LOADER LIFT ARM SUPPORT
Herbert W. Borer, Naperville, and Franz J. Profit and James W. White, Aurora, Ill., assignors to Caterpillar Tractor Co., Peoria, Ill., a corporation of California
Filed Apr. 11, 1967, Ser. No. 630,134
5 Claims. (Cl. 214—776)

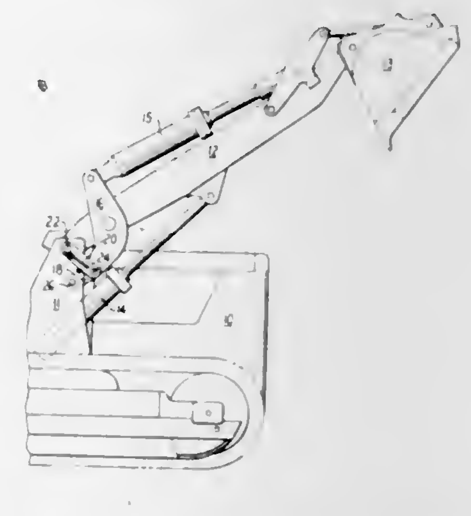

Latch means for a support which is used to prevent the lift arm of a tractor mounted bucket from descending when it is locked in a raised position.

3,396,864
SAFETY CAP STRUCTURE
Frederick E. Jones, 5905 Westbrook Road 55422, and John V. Knight, 7924 Olson Memorial Highway 55427, both of Minneapolis, Minn.
Filed Mar. 1, 1967, Ser. No. 619,675
1 Claim. (Cl. 215—9)

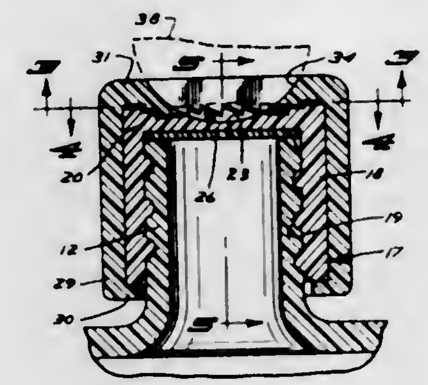

A safety cap for a container such as a medicine bottle consisting of an inner end and outer cap portion normally having interengagement to be threaded onto the container to cover the same and requiring the insertion of a plate member to interlock said cap portions for removal of the same from the container.

3,396,865
SYNTHESIS PRESSURE VESSEL
Albert Walter Elmes and Martin John Montague Raymond, Norton-on-Tees, England, assignors to Imperial Chemical Industries Limited, London, England, a corporation of Great Britain
Filed Apr. 1, 1965, Ser. No. 444,772
Claims priority, application Great Britain, Apr. 8, 1964, 14,540/64
1 Claim. (Cl. 220—13)

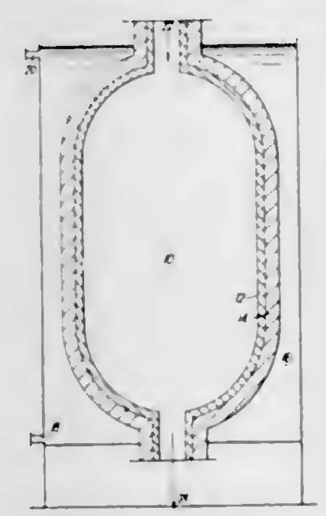

A pressure vessel suitable for synthesis of e.g. ammonia or methanol has a thermally conducting pressure shell, a chemically resistant thermally insulating lining within the shell and means for cooling the pressure shell. The pressure shell can be made of steel, the lining of dense refractory concrete and cooling is preferably by means of a circulating fluid within the water jacket.

3,396,866
CAP FOR AEROSOL CONTAINER
Edward F. Oppasser, Des Plaines, Ill., assignor to Alberto-Culver Company, Melrose Park, Ill., a corporation of Delaware
Filed Dec. 6, 1966, Ser. No. 599,462
6 Claims. (Cl. 220—60)

A molded cap for an aerosol container having a peripheral flange where the cap is applied, retained, and removed by the action of internal rib means which provide transverse shoulders for engaging the flange top, axial shoulders for engaging the flange sides, slight inward pro-

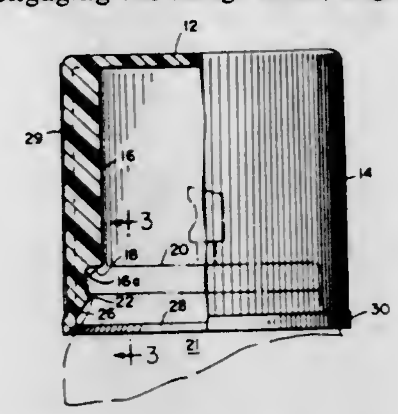

tuberances for engaging the flange bottoms, and lower beveled surfaces for guiding the cap onto the flange.

3,396,867
PACKING CASE
Jaime Santiago Garriga, Dahlienstrasse 42, Krefeld, Germany
Filed June 28, 1966, Ser. No. 561,203
Claims priority, application Germany, June 29, 1965, D 31,535
3 Claims. (Cl. 220—97)

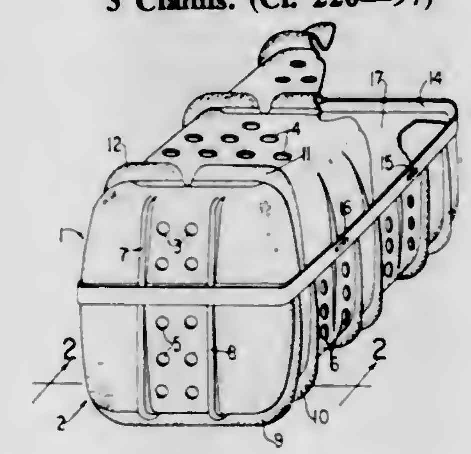

This invention relates to a stackable ventilated packing case comprising a bottom half of substantially rectangular dimensions having a bottom, outwardly sloping walls of a conic section and curved junctions, said bottom half having a plurality of sets of parallel transverse outwardly projecting ribs extending continuously about said walls and bottom, each of said set of parallel ribs having at least one outwardly projecting longitudinal rib connecting said set of parallel ribs on the bottom of said bottom half; a top half of substantially rectangular dimensions having a top, outwardly sloping walls of a conic section and curved junctions, said top half having a plurality of transverse outwardly projecting ribs extending continuously about said walls and top positioned on said top to cooperate with and engage in said parallel ribs of said bottom of said bottom half, each of said projecting ribs having indentations positioned on the top of said top half and adapted to cooperate with and engage in said connecting longitudinal ribs on the bottom of said bottom half; both of said top and bottom halves having ventilation perforations; and means for securing said top and bottom halves together, whereby a packing case unit is formed which is stackable on itself.

3,396,868
CONTAINER
Charles E. Fitzgerald, Findlay, Ohio, assignor to The Dow Chemical Company, Midland, Mich., a corporation of Delaware
Filed Oct. 24, 1966, Ser. No. 589,112
4 Claims. (Cl. 220—97)

A nestable thin walled container for packaging cottage cheese, salads, ice-creams and other like products. The

tub part of the container includes a high profile stacking ridge combined with a lid receiving groove which permits more positive and compact nesting of a plurality of

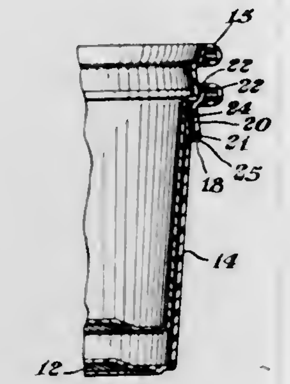

such tubs, and more area for printing the side wall thereof. The container includes a lid especially designed to mate with the stacking ridge area of the tub.

3,396,869
DISPENSING APPARATUS WITH MOVABLE SUPPLY SOURCES
Ronald Gale, Hot Springs, Ark., assignor to Norris Dispensers, Inc., Minneapolis, Minn., a corporation of Minnesota
Filed June 9, 1967, Ser. No. 644,892
8 Claims. (Cl. 221—116)

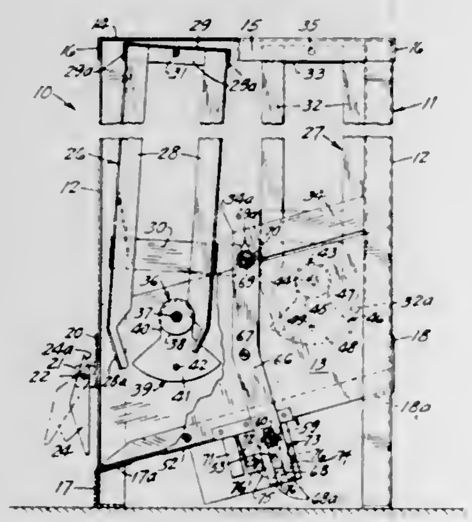

An apparatus for dispensing containers comprising a pair of article supporting racks pivotally mounted in a housing and each rack containing a plurality of the containers. An electric motor connected to the racks to shift the racks simultaneously, so that a container may be discharged from one rack when the motor is energized, and the control switch de-energizing the motor after a container has been dispensed.

3,396,870
MECHANICAL METAL POURING CONTROL SYSTEM AND COMPONENTS THEREOF
Milton J. Diamond, Saginaw, Mich., and Robert J. Kinsey, Danville, Ill., assignors to General Motors Corporation, Detroit, Mich., a corporation of Delaware
Filed Jan. 3, 1967, Ser. No. 606,725
5 Claims. (Cl. 222—14)

Automatic metal pouring control apparatus to measure out desired amounts of metal from a ladle. A gamma source and detector detect metal height in the pouring spout which is a function of pouring rate. Electronic circuitry converts the detector output to a value correspond-

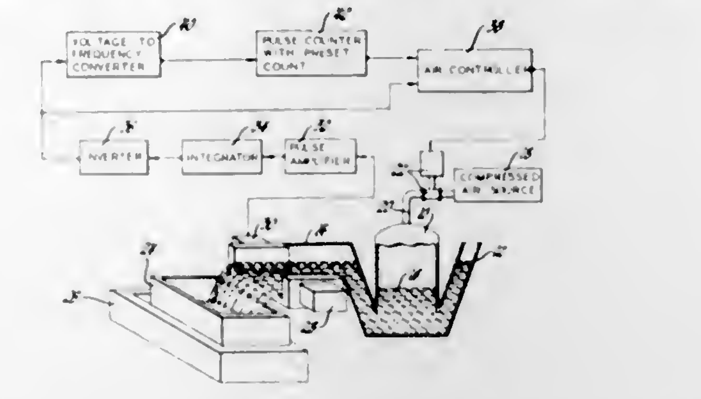

ing to the amount of metal poured and the pouring is stopped at a predetermined value.

3,396,871
BEVERAGE DISPENSING UNIT
Gerald P. McCann, Glendale, Calif., assignor to McCann's Engineering & Mfg. Co., Glendale, Calif., a corporation of California
Filed July 15, 1966, Ser. No. 565,601
4 Claims. (Cl. 222—76)

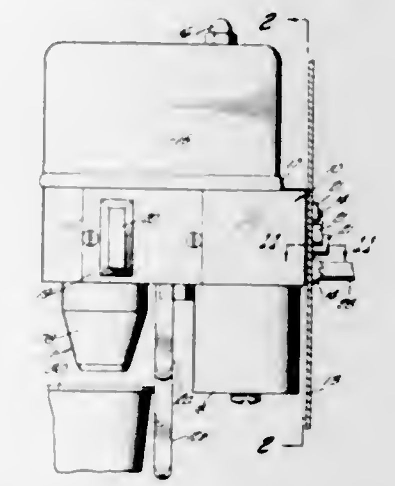

A beverage dispensing and mixing unit having a plurality of valve means adapted to be connected to separate liquid reservoirs whereby the valves can be actuated a number of ways in order to dispense more than one mixture from the unit. The body of the unit contains the valve means and has the fluid passages formed integrally with the body so as to facilitate assembly and prevent leaks. The unit also includes a diffuser nozzle of a design that permits the mixing of various combinations of beverages without intermixing flavors.

3,396,872
POWDER DISPENSER FOR PRINTED WEBS
George V. Wheeler, 1212 E. Henry Clay St., Milwaukee, Wis. 53211
Filed Apr. 20, 1966, Ser. No. 543,936
1 Claim. (Cl. 222—193)

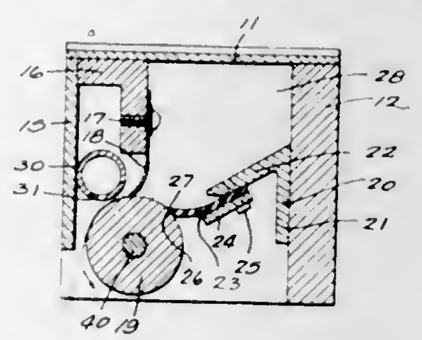

A container disposed above a printed web holding a quantity of powder over a roll which rotates and deposits

the powder on the web below, and the container held powder is in contact with the roll between a doctor blade of resilient material and a strip of shim stock set to allow a certain amount of powder to pass between said strip and the roller, and an adjacent apertured tube emitting compressed air to blow said powder against the web.

3,396,873
PRESSURE CASTING MACHINE
Alfred Nef, Uzwil, Switzerland, assignor to Gebrüder Bühler A.G., Uzwil, Switzerland
Filed Aug. 22, 1966, Ser. No. 574,087
Claims priority, application Switzerland, Aug. 25, 1965, 11,920/65
22 Claims. (Cl. 222—309)

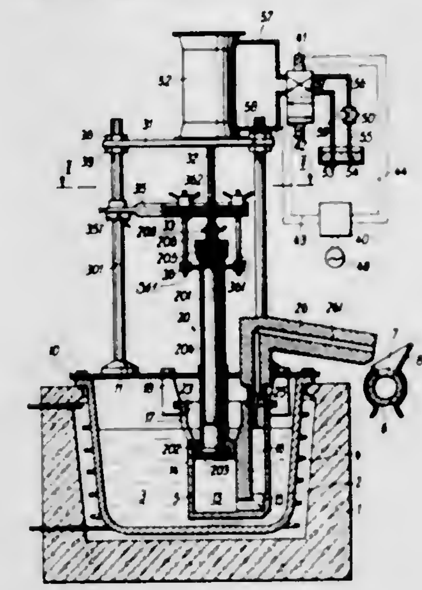

A pressure casting machine comprises a crucible for the smelt-heating of a metal to be cast and a conveying pump for conveying the smelt material from the crucible located within the molten metal. The conveying pump includes a housing with an inlet arranged below the level of the smelt material and a discharge feed conduit extending out of the crucible for discharge into a mold for casting or into a casting shot sleeve. A feature of the construction is that the piston which moves in the conveying pump housing is provided with a surrounding envelope of a material which is resistant to thermal and chemical action of the smelt material.

3,396,874
POSITIVE ACTION DISPENSING VALVE
Carl E. Malone, Fort Lauderdale, Fla., assignor to The AFA Corporation of Florida, Miami, Fla., a corporation of Florida
Filed May 15, 1967, Ser. No. 638,313
8 Claims. (Cl. 222—402.1)

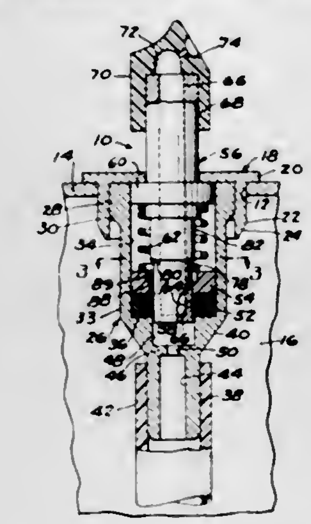

A dispensing valve for dispensing of various liquids under relatively high pressure from a source such as an aerosol can wherein the valve has a finger pressure actuated member normally biased to closed position by a coil spring. The spring encircles the valve member and has a chordal portion formed in its bottommost turn to provide a yieldable detent or spring latch which must be cammed out of the way by a stop-trip shoulder of the valve member before the member can be depressed by finger pressure to its opened, liquid dispensing position. This insures that the valve opens, and also closes, with a snap action, thereby eliminating the dribble or droplets obtained with conventional dispensing valves when the same are gradually opened or closed.

3,396,875
CONTAINER WITH INTEGRAL MEASURING CHAMBER
Earl A. Finch, Richmond, Va. (% Richard P. Matthews, 2316 S. Eads St., Arlington, Va. 22202)
Filed Nov. 25, 1966, Ser. No. 596,933
3 Claims. (Cl. 222—456)

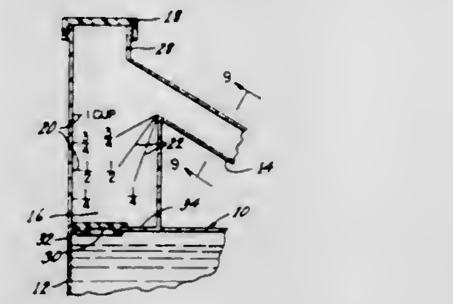

This invention discloses a container having an integral measuring chamber suitable for dispensing individual measured units or doses. One feature of the invention is a hollow handle structure which permits filling of the container therethrough. Another feature of the invention, constituting a preferred form thereof, is the provision of an alternate filling path through a measuring chamber into the main chamber with means for closing this alternate path after the container has been filled.

3,396,876
LIQUID FOOD CONTAINER
Norman Workman and Clayton W. Wilson, both of Box 321, Rte. 2, South Point, Ohio 45680
Filed May 6, 1966, Ser. No. 548,213
7 Claims. (Cl. 222—474)

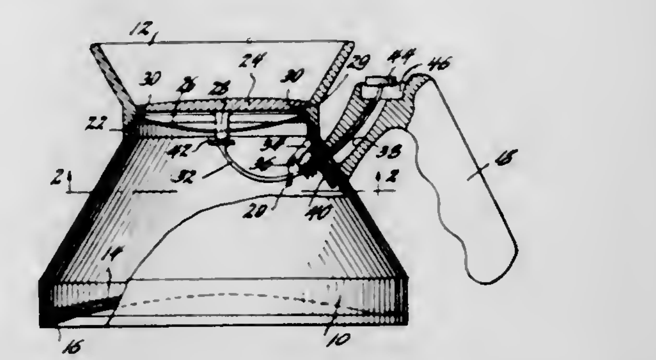

Basically, the invention comprises a body portion for holding a liquid, a rim threadably attached to the body portion, a vertically movable sealing lid in the rim, a spring for biasing the lid downwardly against the rim, and means contained in the body portion for raising the lid. The rim and body portions of the invention are separable so that the invention may be easily cleaned. The bottom of the body portion is recessed and the lower periphery of the body is provided with a layer of resilient, sponge-like material to prevent the invention from slipping upon a slick surface on which it might be placed. Finally, the

side walls and body portion may be insulated so as to maintain an even temperature in a hot or cold liquid carried by the invention.

3,396,877
COMPOSITE NOZZLE POCKET BLOCK
Carl E. Osterholtz, Bethlehem, Pa., and John Derkacz, Hamburg, N.Y., assignors to Bethlehem Steel Corporation, a corporation of Delaware
Filed Mar. 10, 1966, Ser. No. 533,279
1 Claim. (Cl. 222—566)

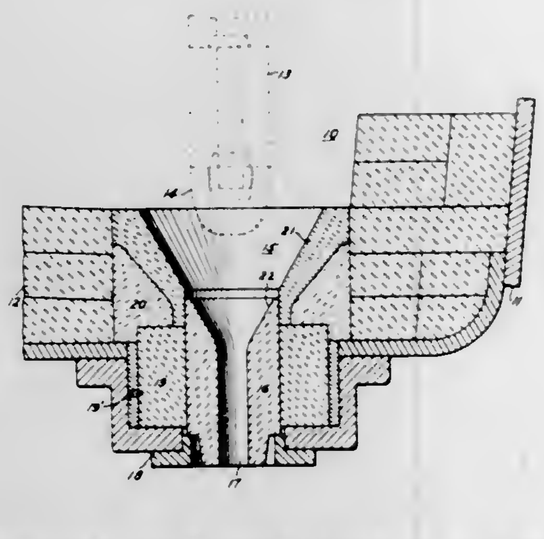

A composite nozzle pocket block in a ladle used to transfer molten metal. A lower portion of the block is a pre-fired cylindrical refractory shape. The upper portion is formed in two rammed sections, one superposed on the other to form a truncated conical opening blending into the nozzle seat. The bottom portion may be of pre-fired high heat duty fireclay while the upper portion may be of a 90%–95% alumina phosphate bonded refractory mix.

3,396,878
FOLDING DEVICE FOR FLAT GOODS
Clarence L. Snayberger, Sr., 327 N. 15th St. 18102, and Clarence L. Snayberger, Jr., 412 Hanover Ave. 18103, both of Allentown, Pa.
Filed Oct. 25, 1966, Ser. No. 589,406
4 Claims. (Cl. 223—37)

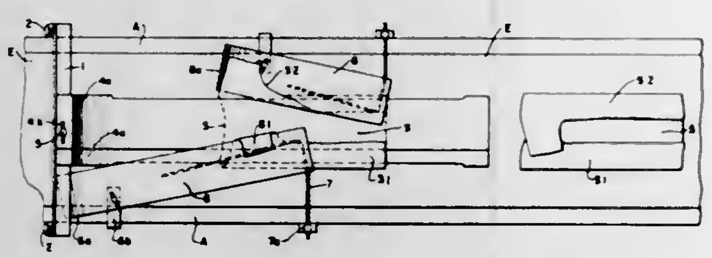

1\. In combination, a frame with an endless conveyor belt supported thereupon and having an upper run continuously driven in one direction to move articles of clothing placed on said run at the leading end thereof towards the other end, a folding device comprising a pair of superimposed folding plates normally resting upon said run and being of less overall width than that of the run and under which the articles pass during their movement on said run; the leading ends of said plates being upwardly curved to permit entry thereunder of said articles; means on said frame for centering and maintaining the plates in fixed relation on said run and for adjusting the overall width of the plates; a pair of folding pans cooperating with and disposed above the folding plates, one pan being disposed in advance of the other; and said pans being adjustably mounted respectively in brackets secured to opposite sides of the frame; each pan being of substantially rectangular shape and disposed at an angle to the axis of the belt and having a downwardly curved front end which rests on said run with its inner corner adjacent and spaced from the near side of the plates, said front end being adapted to pass under and raise the near side of the article along the folding plates, the inner edge portions of the pans overlying the plates and being adapted to fold the raised side of the article inwardly and flat upon the near side of the top of the folding plates as the article is advanced by the run under the folding plates; whereby one side of the article will be folded in advance of the other, both folds being performed when the article emerges from the folding plates.

3,396,879
PNEUMATIC CONVEYORS
William Barry Hall, Hermitage Lane, Mansfield, Nottinghamshire, England
Filed Aug. 3, 1965, Ser. No. 476,883
17 Claims. (Cl. 223—43)

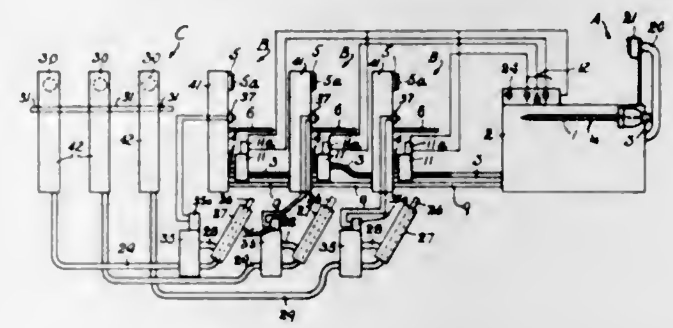

Disclosed herein is a pneumatic conveyor for transporting articles from an inspection station to a work station and subsequently to a collection station including a delivery tube into which the articles are to be inserted at the inspection station. The delivery tube is connected via a plurality of valves to a plurality of branch tubes, which terminate at a work station. Control means are provided at the inspection station for controlling the operation of the valves to direct an article to a particular one of the work stations. A further pipe opens at each of the work stations for delivering the articles from any of the work stations to a collecting point.

3,396,880
APPARATUS AND METHOD FOR MAKING LOOPED RIBBON ORNAMENTS
Ira L. Lopata, 35 Sutton Place, New York, N.Y. 10022
Filed July 28, 1965, Ser. No. 475,473
27 Claims. (Cl. 223—46)

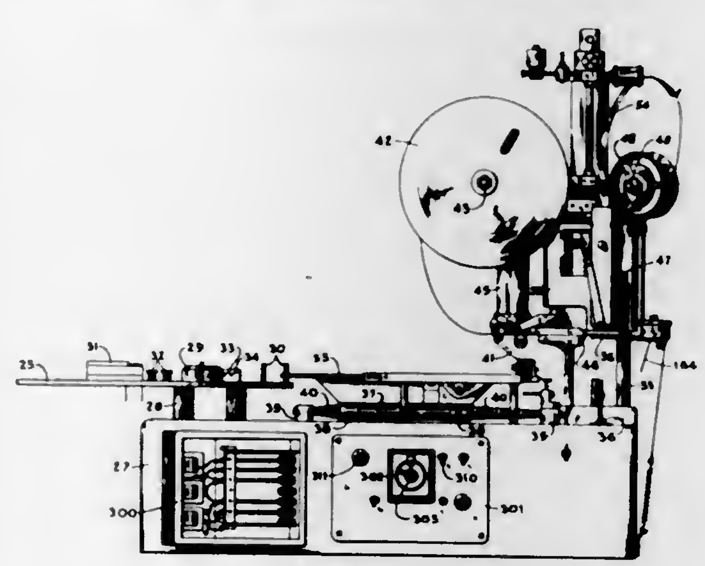

An apparatus for making looped ribbon ornaments in which the ribbon is delivered to an impaling station by a reciprocating carriage which seizes and feeds the ribbon as it advances, pauses, and releases the ribbon as it withdraws; an impaling spindle that rises to impale the ribbon during the pause of the carriage and descends and twists the ribbon while the carriage withdraws and advances, and then impales a new portion of the fed ribbon during the next successive pause of the carriage; a ribbon cutoff that operates in advance of and close to the impaling spindle to cut the ribbon off short at the spindle; a label-feed cut-off that severs the label from a continuous strip as the ribbon is affixed.

A method for making looped ribbon ornaments by feeding the ribbon to an impaling station by means of a reciprocating carriage that grips the ribbon to advance it during a feed stroke, and releases the ribbon during the carriage return; the carriage dwells between feed and return strokes, while a vertically reciprocating spindle rises to impale successive reaches of ribbon during each carriage dwell, and twists the unimpaled end of the ribbon prior to the next impalement as the spindle lowers between dwells of the carriage.

3,396,881
GARMENT SHAPING BAG WITH RESILIENT INSERTS
Alfred Aloi, 116 Old Bergen Road, Jersey City, N.J. 07305
Filed June 27, 1966, Ser. No. 560,439
6 Claims. (Cl. 223—67)

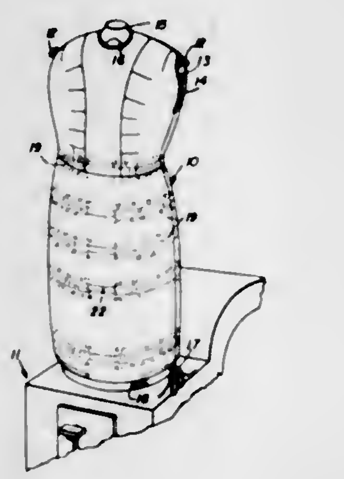

A bag for shaping garments employed in garment finishing machines having a plurality of vertically spaced circumferentially disposed resilient inserts oriented in circumferential channels formed by a band of fabric material stitched to the inner surface of the bag at vertically spaced positions with the ends of the band being spaced from each other to provide access to the channel. The ends of the resilient inserts are connected to an inelastic strip attached to the inner surface of the bag between the ends of the band with the ends of the resilient insert and the ends of the inelastic strip having interconnecting fastening elements associated therewith. The resilient insert is in the form of a coil spring or a strip of elastic resilient material.

3,396,882
HOSIERY-REMOVAL DEVICE
Abe Berlin, 2843 W. Girard Ave., Philadelphia, Pa. 19130
Filed May 2, 1966, Ser. No. 546,968
1 Claim. (Cl. 223—111)

This is a device for removal of hosiery by incapacitated persons unable to perform the necessary bending and reaching, and includes an elongate shank having a handle on one end and provided with a transverse sheet portion on the other end having elongate extensions in facing spaced relation for engagement of one extension between a user's leg and the upper portion of a stocking being worn by the user. Upon continued downward movement

of the device, the transverse sheet portion effects progressive gathering and folding of the stocking, while the other extension retains the gathered stocking portion beneath the transverse sheet portion.

3,396,883
FLEXIBLE SHOEHORN
Jose Hernandez Batista, 1822 SW. 99th Place, Miami, Fla. 33165
Filed Jan. 9, 1967, Ser. No. 607,991
3 Claims. (Cl. 223—118)

A shoehorn comprised of a tough, flexible and pliable material, and formed in a symmetrical flat sheet having a plurality of closely adjacent transverse score lines in one surface, adjacent one end thereof, and generally longitudinally extending score lines in the opposite surface of the horn to that of the surface in which the transverse score lines are provided; the combination of the transverse and longitudinally extending score lines facilitating the desired permanent contouring thereof.

3,396,884
MULTILAYER STRAP FOR WRISTWATCHES OF THERMOPLASTIC MATERIAL
Hilmar Herzog, Nottingen, near Pforzheim, Germany, assignor to Gustav Bauer KG, Ellmendingen-Baden, Germany, a corporation of Germany
Filed Apr. 26, 1966, Ser. No. 545,402
Claims priority, application Germany, Dec. 8, 1965, H 57,902
7 Claims. (Cl. 224—4)

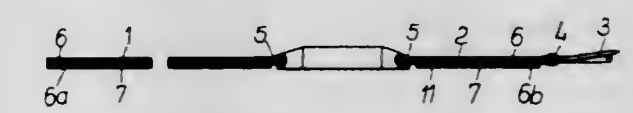

Three layers of thermoplastic materials are bonded together at their longitudinal edges, and just beyond the loops to attach a buckle, or a wristwatch pin; the top layer is folded over to form pin-receiving loops, and a bottom layer is attached between the bulges formed by the loops, by the continuous bonding along the longitudinal edges and beyond the loops.

3,396,885
BICYCLE WIRE BASKET LINER AND COVER
Leona Ann Glondi, P.O. Box 304, Warrenville, Ill. 60555
Continuation-in-part of application Ser. No. 522,117, Jan. 21, 1966. This application Feb. 16, 1967, Ser. No. 616,716
10 Claims. (Cl. 224—32)

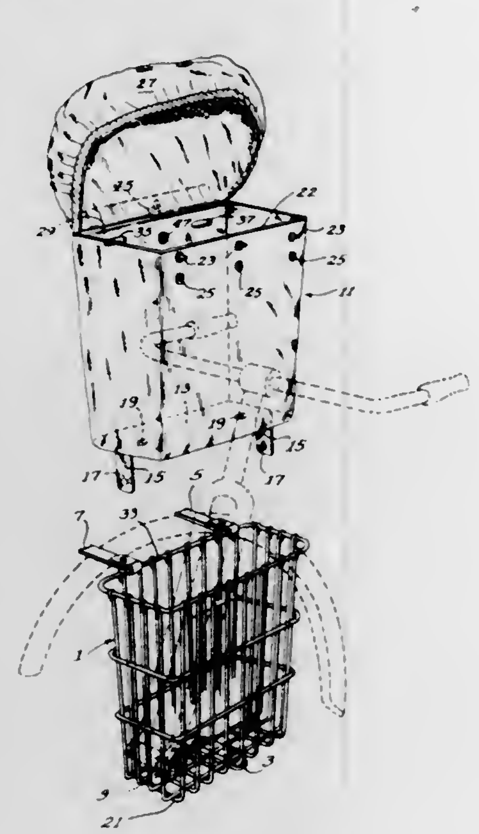

A liner and cover for bicycle wire baskets made of plastic or other pliable waterproof material, shaped to fit snugly inside the basket and provided with means for removably fastening the liner to the bottom and top of the basket.

3,396,886
STAMP DISPENSING MACHINE
James H. Walker, Los Angeles, Calif., assignor of one-half each to Leland L. Dills and Richard W. Callaway, both of Arcadia, Calif.
Filed Oct. 7, 1964, Ser. No. 402,180
36 Claims. (Cl. 225—11)

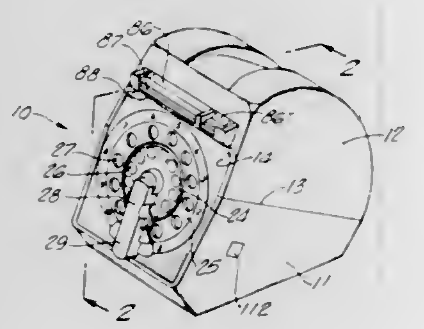

1. In a machine for dispensing selected whole numbers of stamps from continuous strips of stamps connected together by transverse perforations, said machine having a housing provided with an upwardly inclined forward face, a pair of concentric dials on the front of said upwardly inclined face each having a plurality of finger-engaging recesses arranged along their respective rims and indicative of the number of stamps to be dispensed by rotation of a selected recess to a stop, separate rotary stamp dispensing means having axes extending generally transversely of the axis of said dials, means including separate positive drive belts between said dials and a respective one of said rotary stamp dispensing means, a stamp storage chamber within said housing for storing continuous strips of stamps in position for free flow to said rotary stamp dispensing means and to a stamp discharge opening, and means for stopping said dispensing means with the transverse end edge of the stamp next to be dispensed locked in position at the discharge opening from the housing.

3,396,887
VACUUM CONTROL FOR MOVING SHEETS
Rudolf Bade, Friedrichsgabe, Post Harksheide, Bezirk Hamburg, Germany, assignor to W. R. Grace & Co., Duncan, S.C., a corporation of Connecticut
Filed Mar. 16, 1966, Ser. No. 534,703
Claims priority, application Germany, Apr. 1, 1965, D 46,943
4 Claims. (Cl. 226—1)

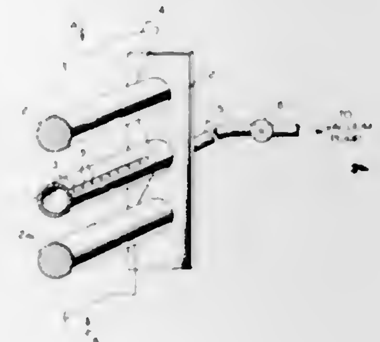

A method and apparatus for controlling moving sheets which are relatively impermeable to gases in which the sheets are passed over stationary members in sliding engagement therewith, said stationary members having openings therein which are connected to a vacuum pump. The sheets are passed over the openings so that the openings are effectively sealed from the ambient atmospheric pressure. Adjustment of the amount of vacuum regulates frictional engagement of the sheet and thereby controls its movement.

3,396,888
WIRE FEEDER
Henry V. Rygiol, Whittier, Calif. (12000 Rivera Road, Santa Fe Springs, Calif. 90670)
Filed Sept. 15, 1966, Ser. No. 579,618
10 Claims. (Cl. 226—134)

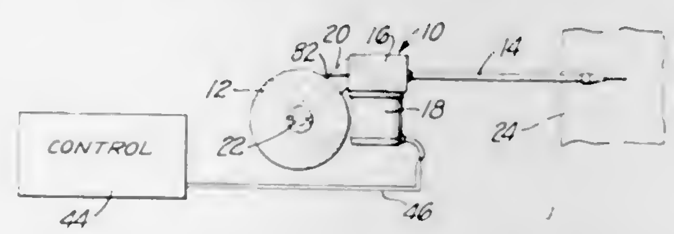

This invention is directed to a wire feeder and particularly to a wire feeder which exercises such control over the wire it feeds that it is particularly suitable for extremely delicate and accurate wire feeding operations, such as the feeding of welding wire to a welding head.

3,396,889
REVERSIBLE FEED WHEEL MECHANISM FOR POWER STRAPPING MACHINES
James R. Annis, Jr., Northbrook, Ill., assignor to Signode Corporation, Chicago, Ill., a corporation of Delaware
Filed May 23, 1966, Ser. No. 551,975
9 Claims. (Cl. 226—143)

1. In a strapping machine having a framework, a reversible feed wheel mechanism for feeding a length of

strapping in one direction for article-encircling purposes and in a reverse direction for strap-tensioning purposes, said mechanism comprising: a reaction member supported by the framework, a rotatable feed wheel designed for cooperation with said reaction member for tractionally feeding strapping thereacross in opposite direction, and a suspension linkage movably supporting said feed wheel

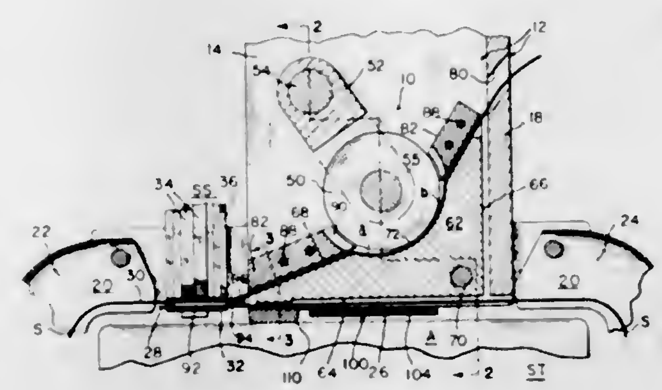

on the framework and including a link portion which is effective under compression and through the strapping to cause progressive binding of the feed wheel against the reaction member under the influence of the locomotive action of the feed wheel on the strapping during rotation of the feed wheel in either direction, and means for selectively rotating the feed wheel in opposite directions.

3,396,890
TAPE TRANSPORT DRIVE MEANS
Langdon H. Fulton, Wynnewood, Pa., assignor to Radio Corporation of America, a corporation of Delaware
Filed Dec. 20, 1966, Ser. No. 603,274
9 Claims. (Cl. 226—177)

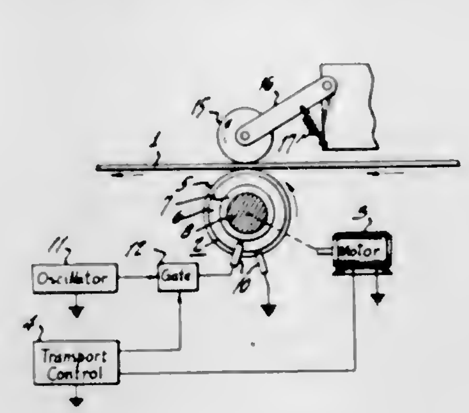

1. A tape drive assembly comprising a capstan having an outer cylindrical shell, a transducer means attached to the interior of said shell and arranged to impart a physical oscillation thereto, drive means arranged to rotate said capstan, and a tape pinch means arranged to apply a normal force to an outside surface of said shell.

3,396,891
APPARATUS FOR FEEDING A WELDING ELECTRODE OF QUADRANGULAR CROSS-SECTION
Cornelis Pieter de Jong and Hendrikus Johannes Kanters, Eindhoven, Netherlands, assignors to North American Philips Company, Inc., New York, N.Y., a corporation of Delaware
Filed Oct. 26, 1966, Ser. No. 589,561
Claims priority, application Netherlands, Nov. 13, 1965, 6514776
3 Claims. (Cl. 226—184)

A welding electrode of quadrangular cross-section. A driving means for the electrode is a set of spaced, opposed rollers having V-shaped, roughened grooves facing each other and engaging the sides of the welding electrode. The

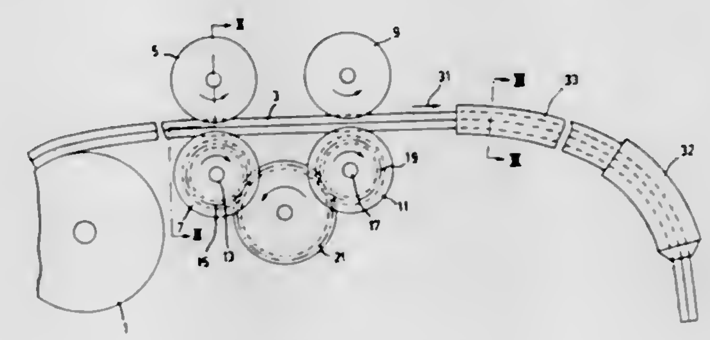

grooves each have openings in the bottom so that the corners of the electrode do not engage the rollers.

3,396,892
ULTRASONIC MOTOR SYSTEM
Lewis Balamuth, New York, N.Y., assignor to Cavitron Corporation, a corporation of New York
Filed Jan. 20, 1966, Ser. No. 521,949
14 Claims. (Cl. 228—1)

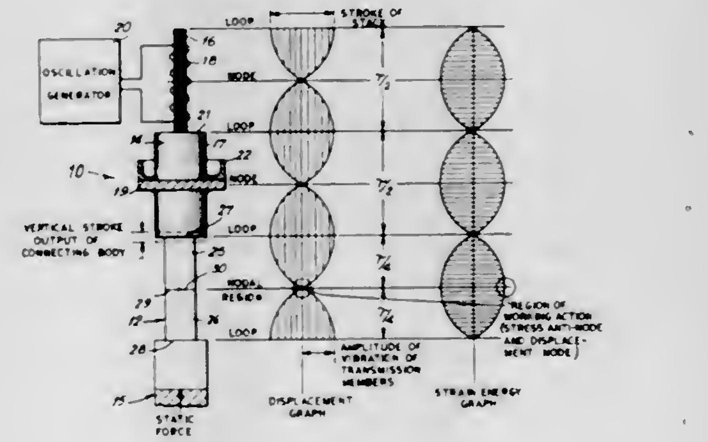

1. A device for applying mechanical energy to a work object, the combination comprising
(A) means for generating high frequency mechanical vibrations of a predetermined vibration mode,
(B) transmission means,
(C) means for transmitting said variations through said transmission means, and
(D) means for placing the work object against said transmission means under a sufficient static force to establish a nodal region essentially at the location of said work object, whereby mechanical energy is transmitted thereto.

3,396,893
FRICTION WELDER
Hobart A. Cress and James T. Walls, Columbus, Ohio, assignors to the United States of America as represented by the United Atomic Energy Commission
Filed Nov. 1, 1966, Ser. No. 591,349
5 Claims. (Cl. 228—2)

1. A friction welder comprising
(A) a rotatable collet for holding one of two parts to be welded, the other part being adapted to be held in a stationary collet,
(B) a rotatable shaft having one end fixed to the rotatable collet,
(C) a brake member surrounding and splined to the shaft and having an external disk portion, the shaft having a shoulder in the neighborhood of the said

one end of the shaft engaged by the end of the brake member facing the said one end of the shaft,

(D) a dog-clutch member surrounding and slidably keyed to the shaft and having one end engaging the end of the brake member remote from the said one end thereof,

(E) a spring acting between the shaft and the end of the dog-clutch member remote from the said one end thereof to urge the dog-clutch member against the brake member and the brake member against the shoulder on the shaft,

(F) a sleeve surrounding the shaft, the spring, and the dog-clutch member, and having at one end an internal dog-clutch portion drivingly engaging the dog-

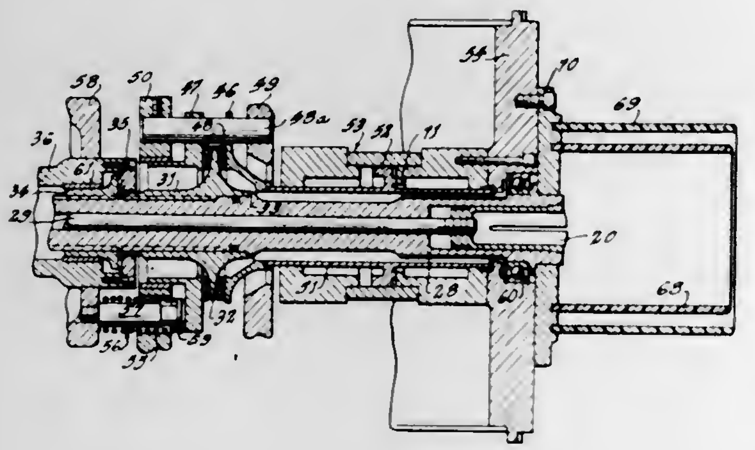

clutch member for transmitting rotation of the sleeve to the shaft, the dog-clutch portion engaging the dog-clutch member when the latter engages the brake member and the brake member engages the shoulder on the shaft, and

(G) means acting against the disk portion of the brake member so as to hold the same against rotation for stopping rotation of the shaft and to move the same away from the said one end of the shaft and thereby to disengage the dog-clutch member from the dog-clutch portion of the sleeve for preventing rotation of the sleeve from being transmitted to the shaft.

3,396,894
SOLDER DEVICE
Roger H. Ellis, Atherton, Calif., assignor to Raychem Corporation, Redwood City, Calif., a corporation of California
Filed May 11, 1965, Ser. No. 454,896
11 Claims. (Cl. 228—56)

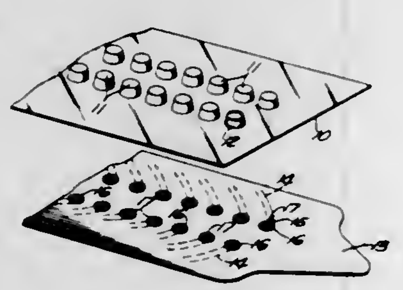

An applicator for simultaneously applying a plurality of bodies of solder or other heat fusible material in which the bodies of the material are disposed in heat recoverable cups formed from or positioned on a sheet of material. When heat is applied to the cups, they recover, the heat fusible material melts, and the recovering cup material forces the heat fusible material out into contact with the objects to be soldered or otherwise connected.

3,396,895
EGG CARTON AND LABEL
David L. Pearl, Atlanta, and John G. Waller, College Park, Ga., and Beverly P. Head, Jr., Birmingham, Ala., assignors to Kennesaw Plastic Company, Atlanta, Ga.
Filed Mar. 27, 1967, Ser. No. 626,288
8 Claims. (Cl. 229—2.5)

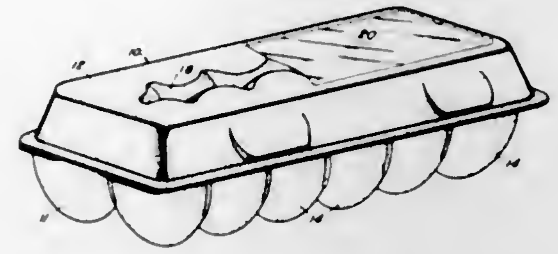

Egg carton and label wherein the carton is fabricated of molded pulp or plastic and shaped to conform to the shape of eggs. The cover portion of the carton is hinged along one of its edges to the lower portion of the carton, and the cover portion defines a recess along its exterior center portion so that its interior portion divides the eggs from one another. A thermoplastic label is applied to the exterior surface of the cover portion, over the recess. The thermoplastic label is shrunk onto the surface of the carton, thus imparting strength characteristics to the cover portion so that it resists the bending and torsional forces experienced by the carton under normal handling conditions.

3,396,896
CONTAINER AND METHOD OF MAKING SAME
Denis Gallagher Russell, 4 Anastasia Place, 16 Scott St., Germiston, Transvaal, Republic of South Africa
Filed Aug. 16, 1967, Ser. No. 661,060
Claims priority, application Republic of South Africa, Aug. 19, 1966, 4,986/66; Aug. 19, 1966, 4,985/66
5 Claims. (Cl. 229—23)

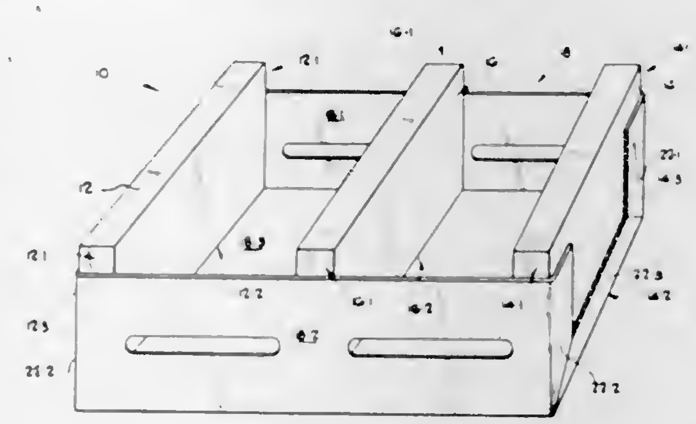

This invention provides for the premanufacture of cardboard panels and timber panels or timber-containing panels, coats of contact adhesive being provided on the panels to permit their being assembled subsequently to form containers.

3,396,897
FIBERBOARD CARTON
Gerald J. Bick, Berkey, and Willis J. Kirkbride, Toledo, Ohio, assignors to Owens-Illinois, Inc., a corporation of Ohio
Filed Oct. 21, 1966, Ser. No. 588,618
4 Claims. (Cl. 229—32)

The invention in question relates to a corrugated board carton having a bottom portion, two side portions and two end portions, the side and end portions containing elongated vertical ventilation slots, the axes of which are parallel with the corrugated flutes of the corrugated board. The above-described arrangement for ventilation slots is ad-

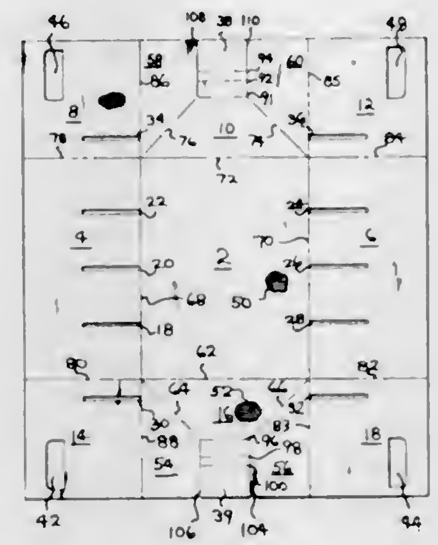

vantageous in that it prevents the easy migration of moisture through the corrugation flutes.

3,396,898
LOCKED CONTAINER
Oskar Dorfmann, North Bergen, N.J., assignor to Federal Carton Corporation, North Bergen, N.J., a corporation of New York
Filed June 14, 1967, Ser. No. 646,083
2 Claims. (Cl. 229—36)

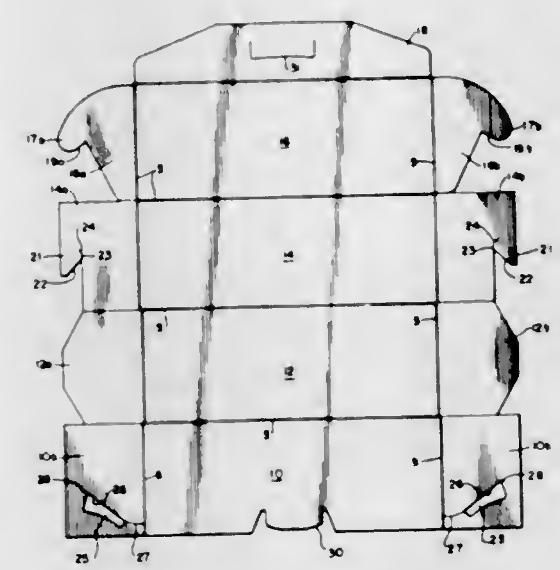

The invention disclosed in this application is a container or carton which is especially adapted, by virtue of its construction, to be utilized in the packaging of compressible products such as food products, especially doughnuts, and which is so arranged as to prevent damage to the packaged product occurring as the carton is closed, and which is in addition, capable of erection and closing on high-speed automatic machinery.

3,396,899
COMPOSITE CONTAINER AND SEALING MEANS THEREFOR
Melvin W. Strouse, Walbridge, and Larry D. Vincent, Toledo, Ohio, assignors to Owens-Illinois, Inc., a corporation of Ohio
Filed Dec. 22, 1966, Ser. No. 603,831
5 Claims. (Cl. 229—43)

An easy-open package comprising a fibrous container having its raw edge sealed with a heat regenerating material, an end sealing member bonded to the heat regenerating material, a protective closure disposed outwardly of

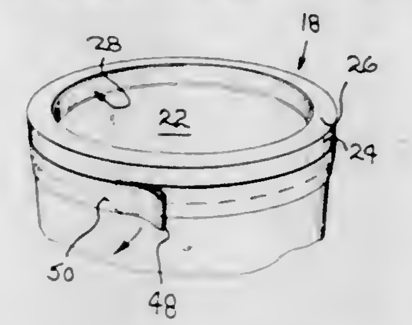

the end sealing member and releasable means for securing the closure to the container.

3,396,900
TEAR TAPE FOR PLASTIC PACKAGING MATERIALS
Malcolm B. Lucas, Cincinnati, Ohio, assignor to The Procter & Gamble Company, Cincinnati, Ohio, a corporation of Ohio
Original application Dec. 24, 1964, Ser. No. 420,974, now Patent No. 3,311,032. Divided and this application Oct. 21, 1966, Ser. No. 598,571
12 Claims. (Cl. 229—51)

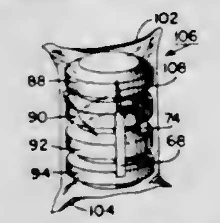

A tear tape is adhered to the outer surface of a plastic package by the use of a hot-melt adhesive composition applied on a narrow elongated area of the outside surface of the plastic packaging material. The package is opened by pulling on one end of the tear tape which causes the plastic packaging material to tear along the edges of the adhered area.

3,396,901
CONTAINER
Robert McFedries, Jr., Midland, Mich., assignor to The Dow Chemical Company, Midland, Mich.
Continuation-in-part of application Ser. No. 575,138, Aug. 25, 1966. This application Jan. 30, 1967, Ser. No. 629,042
10 Claims. (Cl. 229—55)

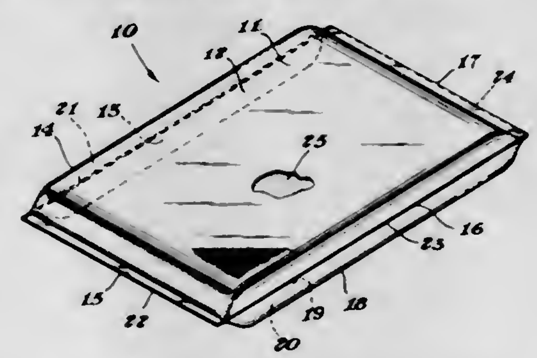

Plastic bags are prepared from two layer plastic film employing as an outer layer on the bags a material having a high coefficient of friction, such as chlorinated polyethylene.

3,396,902
REFUSE SACK
William E. Kilgore, Richmond, Va., assignor to Albemarle Paper Company, Richmond, Va., a corporation of Virginia
Filed July 17, 1967, Ser. No. 653,911
3 Claims. (Cl. 229—62)

A leakproof gusseted refuse sack and method for manufacture thereof whereby part of the faces of the

sack are stepped back from the gussets and a tape is folded lengthwise over the end of the sack and secured

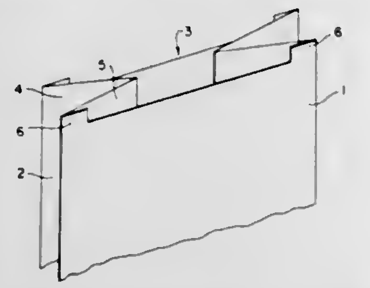

to the exposed inner sides of the gussets and to adjacent parts of the faces of the sack.

3,396,903
HERMETICALLY SEALED TYPE MOTOR-COMPRESSOR FOR REFRIGERATING MACHINE
Iwao Oya, Ota-shi, Japan, assignor to Sanyo Electric Co., Ltd., Moriguchi-shi, Japan, and Tokyo Sanyo Electric Co. Ltd., Gunma-ken, Japan, both corporations of Japan
Filed May 13, 1966, Ser. No. 549,977
Claims priority, application Japan, May 19, 1965, 40/40,003; May 27, 1965, 40/31,468; June 4, 1965, 40/33,280; June 7, 1965, 40/46,269; Oct. 26, 1965, 40/87,226
8 Claims. (Cl. 230—58)

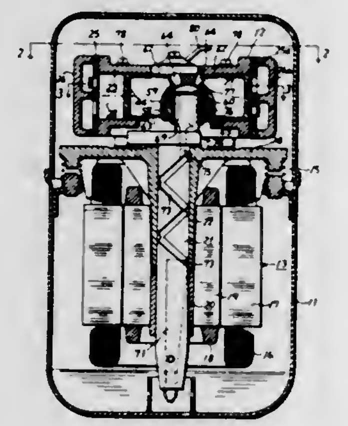

A hermetically sealed container encloses a motor operated compressor. The compressor comprises a two-headed piston located in a pair of integrally formed mutually opposed cylinders. The motor is connected to operate the piston through an eccentric rod connected to a slide pin located in a slot in the piston.

3,396,904
ADJUSTABLE AIR INLET CLOSURE
John I. Janette, Lake Geneva, Wis., assignor to Jan-Air, Inc., Richmond, Ill., a corporation of Illinois
Filed Mar. 27, 1967, Ser. No. 626,039
4 Claims. (Cl. 230—114)

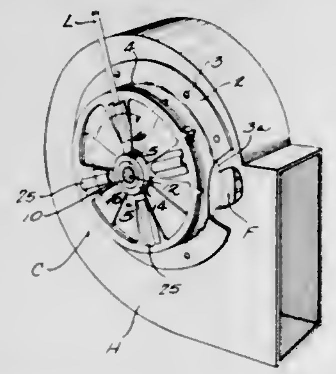

An adjustable, iris type air inlet having two adjustable discs of similar perforations for shifting between an open position of exceptionally large air inlet area, and a fully and tightly closed position.

3,396,905
DUCTED FAN
Douglas Johnson, Indianapolis, Ind., assignor to General Motors Corporation, Detroit, Mich., a corporation of Delaware
Continuation-in-part of application Ser. No. 419,097, Dec. 17, 1964. This application Sept. 28, 1966, Ser. No. 584,623
5 Claims. (Cl. 230—122)

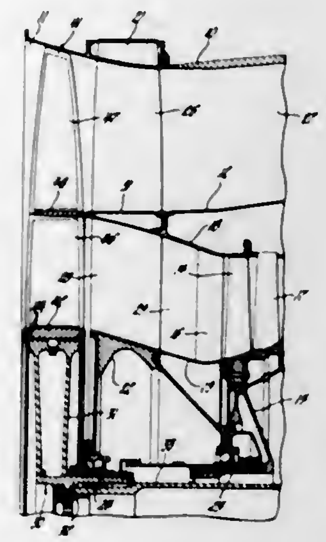

A single stage fan for a ducted fan aircraft engine has an annular flow splitter on the fan blades immediately upstream of the annular wall dividing the by-pass duct from the compressor inlet. There is no blading or splitter ahead of the fan. The splitter structure embodies frictional vibration dampers.

3,396,906
PUMP HOUSING SEAL ARRANGEMENT
Earl W. Newton, La Crosse, Wis., assignor to The Trane Company, La Crosse, Wis., a corporation of Wisconsin
Filed Feb. 6, 1968, Ser. No. 703,447
7 Claims. (Cl. 230—127)

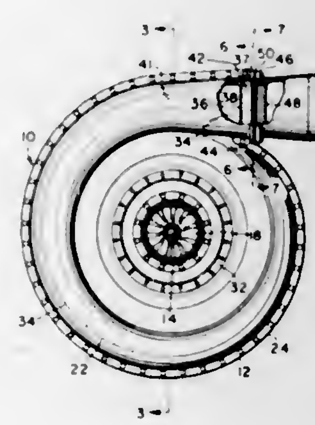

A centrifugal compressor has a cast housing embodying a gas collecting scroll-shaped chamber terminating in the form of a conical diffuser at the compressor outlet. The housing is split along a plane normal to the axis of the compressor axially coextensive with the scroll-shaped chamber and conical diffuser so that no large scroll-shaped cores are required to cast the scroll-shaped chamber in the housing. The discharge duct is connected to the compressor outlet. Both the housing shells and the discharge duct are provided with gasket supporting webs traversing the scroll-shaped chamber and duct respectively at the outlet. The first gasket, located between the housing shells, passes between the webs of the shells while a second gasket, located between the duct and the housing outlet, passes between the web of the duct and the

webs of the shells. Each gasket lies in its own plane which intersects the plane of the other gasket. However, these gaskets need not be in contiguous relation to effect a complete seal, thereby eliminating one of the major causes of leaks in compressors having split discharge outlets.

3,396,907
REFRIGERANT COMPRESSOR WITH SOUND ABSORBING STRUCTURE
Knud V. Valbjorn, Augustenhof, Nordborg, Denmark, assignor to Danfoss A/S, Nordborg, Denmark, a company of Denmark
Filed July 14, 1966, Ser. No. 565,244
Claims priority, application Germany, July 17, 1965, D 47,749
5 Claims. (Cl. 230—232)

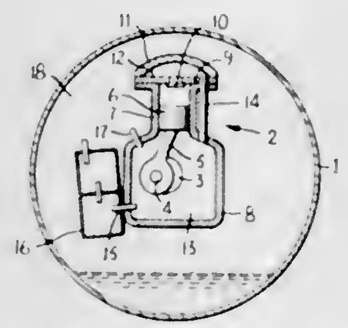

A hermetic refrigerant compressor unit in which the compressor is hermetically enclosed in a capsule which is in communication with the crankcase of the compressor. The crankcase is serially connected with a suction chamber of the compressor upstream or downstream thereof and functions as a sound-absorbing chamber reducing transmission of noise vibrations from the crank and crankpin and suction valves to the interior surfaces of the walls of the hermetic capsule.

3,396,908
HERMETICALLY SEALED COOLING MACHINE
Holger V. Vind, Nordborg, Denmark, assignor to Danfoss A/S, Nordborg, Denmark, a company of Denmark
Filed June 22, 1966, Ser. No. 559,550
Claims priority, application Germany, June 23, 1965, D 47,572
5 Claims. (Cl. 230—235)

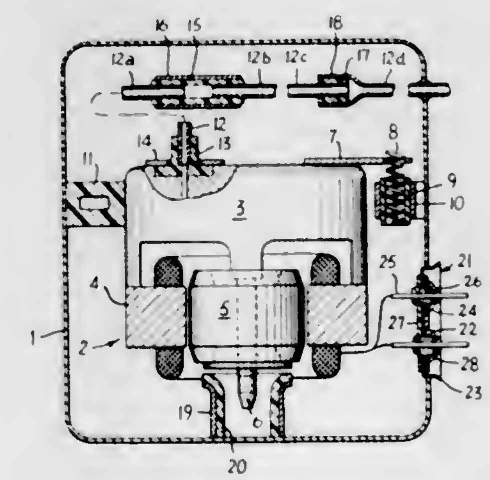

A hermetically sealed capsule encloses a resiliently mounted motor compressor unit. The conduits of the compressor and the resilient suspension means of the unit as well as the electrical circuit are electrically insulated from the capsule.

3,396,909
COOLING FAN FOR INTERNAL-COMBUSTION ENGINE HAVING THERMOSTATICALLY OPERATED CLUTCH
Gerd W. Seifert, 8919 Unterschondorf (Ammersee), Germany
Filed Dec. 7, 1966, Ser. No. 599,908
Claims priority, application Germany, Dec. 10, 1965, S 100,891
9 Claims. (Cl. 230—271)

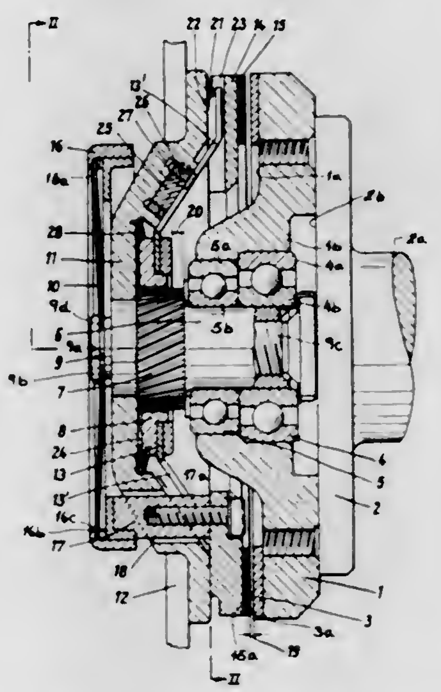

A cooling-fan system for automotive vehicles and the like having internal-combustion engines and having a thermostatically operated clutch with a self-tightening screw-and-nut arrangement operated upon initial engagement of the clutch surfaces to drive the clutch members together, a thermostatic element being provided for initially urging the clutch into its engaged condition.

3,396,910
METHOD AND APPARATUS FOR SENSING THE FULLNESS OF THE MUD CHAMBER IN A CENTRIFUGAL SEPARATOR
Peter Steinacker, Oelde, Germany, assignor to Westfalia Separator Aktiengesellschaft, Oelde, Westphalia, Germany
Filed Aug. 16, 1966, Ser. No. 572,752
Claims priority, application Germany, Aug. 17, 1965, W 39,743
11 Claims. (Cl. 233—20)

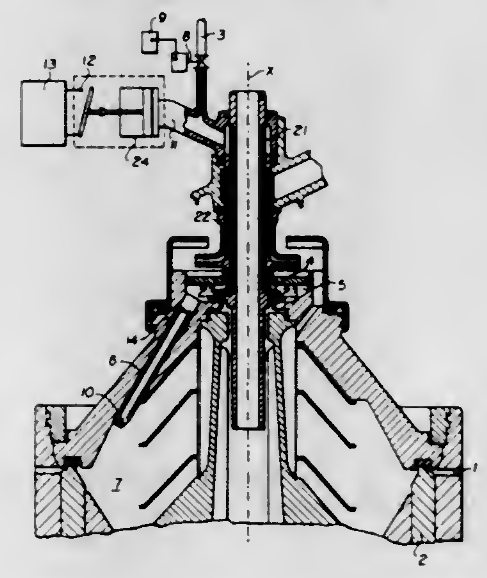

Method and apparatus for determining the fill level of the mud chamber in a centrifuge by weighing the input-

flow rate to the chamber and determining the back pressure corresponding thereto.

3,396,911
SPRAY GUN ACTIVATION MECHANISM
Edward O. Norris, 9 Ledgemoor Lane, Westport, Conn. 06880
Original application Jan. 27, 1964, Ser. No. 340,466, now Patent No. 3,344,992, dated Oct. 4, 1967. Divided and this application Sept. 29, 1967, Ser. No. 671,706
11 Claims. (Cl. 239—290)

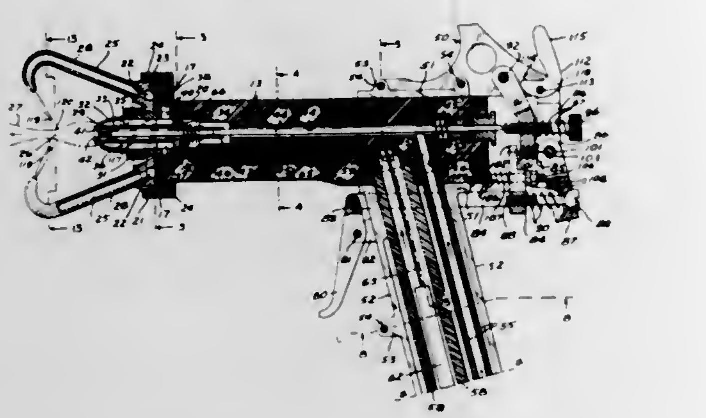

The invention relates to an air-liquid type of spray gun having supplementary air jets impinging on the spray cone soon after it emerges from the spray nozzle. The supplementary air jets serve the function of shaping the spray cone to a predetermined desired form and of reducing the high spray particle velocity, which is necessary for good atomization, to a level suitable for good deposition, especially by electrostatic means. A two-stage, single trigger control element is provided for activating the spray gun. In one position of the trigger, the gun emits a low velocity fan shaped spray, desirable for coating most surfaces. In another position of the trigger, the spray shape is changed to concentrated spot, and the spray is applied at a higher velocity, which is desirable to enable the spray to be directed into relatively inaccessible places. A mechanism for reducing the flow of spray material when the flow of gas to the supplementary jets is stopped is also disclosed.

3,396,912
SLURRY HANDLING APPARATUS
Nils Johan Sahlstrom, Skovde, Sweden, assignor to Sahlstrom Manufacturing Company, Pittsburgh, Pa., a corporation of Pennsylvania
Filed Dec. 3, 1964, Ser. No. 415,635
9 Claims. (Cl. 239—665)

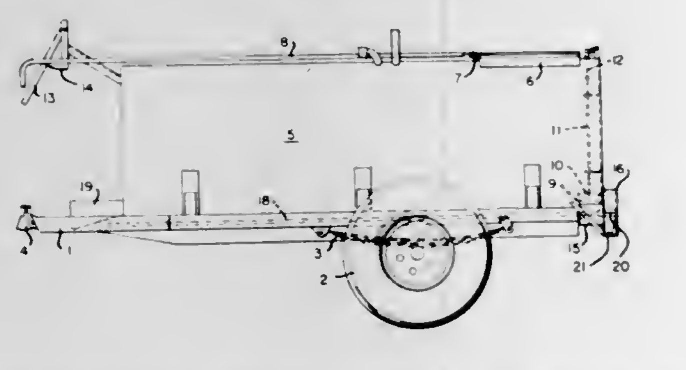

This application discloses a stationary collecting tank and movable tank wagon for collecting, blending, and evenly spreading slurries such as liquid manure. A pump on the tank wagon is connectable to fittings in the collecting tank for blending slurry within the tank and thereafter filling the tank wagon with the slurry. The pump is also operable to distribute the slurry across fields.

3,396,913
MEANS FOR COMMINUTING THERMOPLASTIC MATERIALS
Gunter Jäckering, Vorsterhauserweg 22d, Hamm, Westphalia, Germany
Original application Aug. 6, 1963, Ser. No. 300,208, now Patent No. 3,241,774, dated Mar. 22, 1966. Divided and this application May 21, 1965, Ser. No. 473,258
2 Claims. (Cl. 241—52)

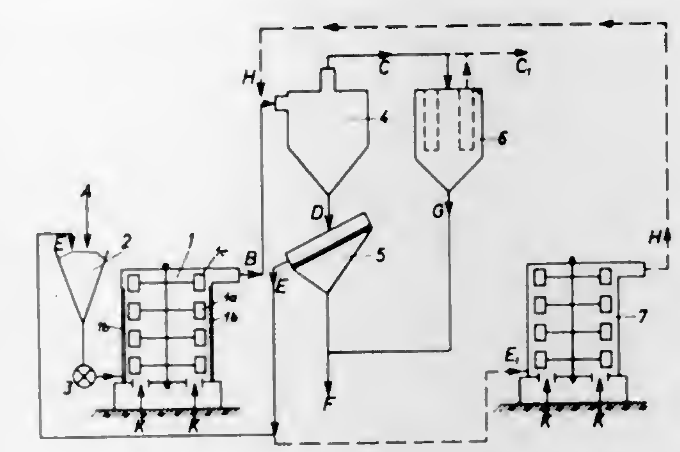

An apparatus for comminuting plastic materials includes a grinding device which receives the material to be ground and a whirling current of gas in an amount of at least 30,000 parts by volume of the gas to one part by volume of the material, the grinding continuing for at most 1.2 seconds. A separator removes the gas and a sieving device rejects insufficiently ground material which may be transferred to a second grinding device for further treatment.

3,396,914
MACHINE FOR DISINTEGRATING PAPER AND OTHER WASTE MATERIALS
Arno J. Liebman, Ross Township, Allegheny County, Pa., assignor to Centriblast Corporation, Pittsburgh, Pa., a corporation of Pennsylvania
Continuation-in-part of application Ser. No. 381,702, July 10, 1964. This application Mar. 15, 1966, Ser. No. 534,506
22 Claims. (Cl. 241—63)

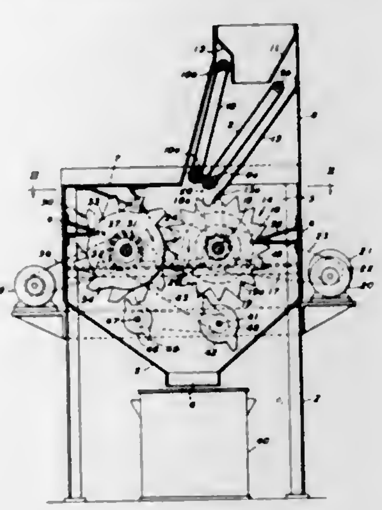

1. Apparatus for disintegrating materials of various kinds into small fragments, comprising,
(a) a supporting structure,
(b) a feed drum mounted in said structure for rotation about a horizontal axis,
(c) a disintegrator drum mounted in said structure for rotation about a horizontal axis,
(d) the feed drum having material engaging and supporting teeth projecting therefrom arranged in axially and angularly spaced rows on the drum,

(e) the disintegrator drum having material impacting teeth extending therefrom, the impacting teeth and disintegrating drum being so disposed with respect to the feed drum that the impacting teeth pass between the teeth of the feed drum with their circles of revolution overlapping, the width of the impacting teeth being greater than the width of the feed drum teeth,
(f) means for rotating the drums in opposite directions with the disintegrator drum being rotated at a higher speed than the feed drum by a ratio of at least 20 to 1 and the linear peripheral speed of the feed drum teeth is in the range of 50 to 5000 inches per minute, and
(g) means for feeding material toward the drums such that the material is engaged by the feed drum teeth before engagement with the impacting teeth.

3,396,915
BOWL ADJUSTMENT FOR CRUSHERS
Frank M. Allen, Whitefish Bay, Wis., assignor to Barber-Greene Company, Milwaukee, Wis., a corporation of Wisconsin
Filed Mar. 16, 1965, Ser. No. 440,082
18 Claims. (Cl. 241—290)

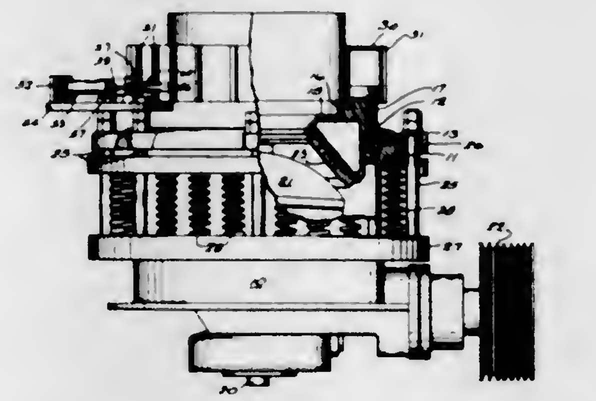

The present invention relates generally to improvements in the art of crushing rock and ore, and relates more particularly to the provision of an improved device for rotating the bowl or concave of a gyratory or cone type crusher to effect adjustments in the position of the bowl relative to the crushing head.

3,396,916
FLUID PRESSURE OPERATED ADJUSTMENT AND RELEASE FOR GYRATORY CRUSHERS AND THE LIKE
Robert H. Kemnitz, Milwaukee, and Heinz W. Winter, Wauwatosa, Wis., assignors to Allis-Chalmers Manufacturing Company, Milwaukee, Wis.
Filed Oct. 28, 1966, Ser. No. 590,399
7 Claims. (Cl. 241—290)

1. A crusher comprising: a main frame including vertical wall structure enclosing a central space; a cone shaped head supported by said frame and projecting upwardly within said central space; a pair of concentric members with the outer member supported by said frame in fixed position and the inner member being supported by said outer member for vertical movement and rotation about a central vertical axis; and inner member comprising an annular bowl arranged about said head and cooperating therewith to define a crushing chamber therebetween, said outer member comprising an annular collar around said bowl; one of said concentric members having a wall defining upper and lower vertical cylindrical surfaces separated by an annular piston projecting horizontally and radially from said surfaces to present a vertical cylindrical piston surface of a diameter different than said upper and lower cylindrical surfaces; the other of said concentric members having three vertical cylindrical surfaces facing and slidably engaging with said upper and lower and piston surfaces of the said one of the concentric members to define between said pair of concentric members an

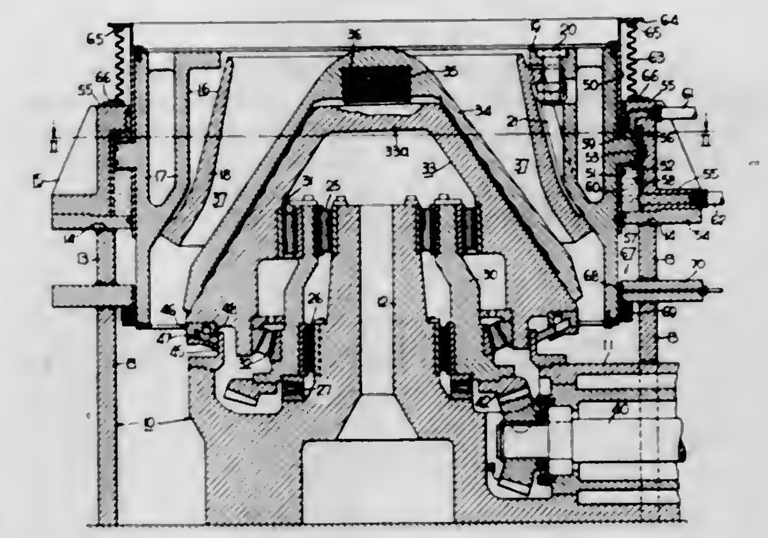

upper expansible and contractable chamber above said piston and a lower expansible and contractable chamber below said piston; and a means communicating with each of said expansible chambers for delivering and venting fluid pressure thereto.

3,396,917
METHOD FOR UNWINDING ROLLS
Elbert P. Carter, Wilmington, Del., assignor to E. I. du Pont de Nemours and Company, Wilmington, Del., a corporation of Delaware
Filed Mar. 1, 1966, Ser. No. 530,937
5 Claims. (Cl. 242—55)

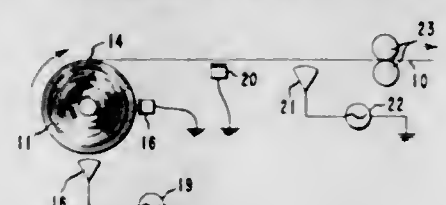

A method for reducing electrostatic charges on a pellicle being unwound from a roll by passing the surface of the pellicle, prior to the joint of separation from the roll, in close proximity to a charge removal device that extends parallel to the roll.

3,396,918
EXPANDABLE ADAPTER
William G. Adamson, Canfield, and Rollin A. Bonnell and Robert H. Feucht, Cuyahoga Falls, Ohio, assignors to The Goodyear Tire & Rubber Company, Akron, Ohio, a corporation of Ohio
Filed Jan. 9, 1967, Ser. No. 607,921
11 Claims. (Cl. 242—72)

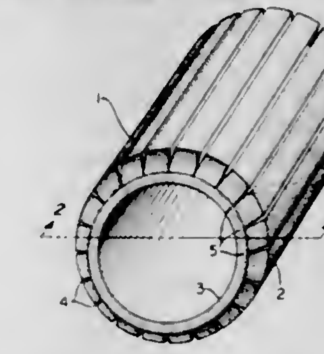

An elastomeric tubular adapter over an expandable steel mandrel for insertion into an already coiled roll of strip

stock for handling or recoiling in some instances. Coils of widely varying inside diameters may be processed without changing mandrel segments which would require partial dismantling. The adapter design provides substantial uniform radial expansion with insignificant effect on the wall thickness.

3,396,919
MAGNETIC BOBBIN HOLDING DEVICE
William C. Vayda, Bayonne, N.J., assignor to General Cable Corporation, New York, N.Y., a corporation of New Jersey
Filed Mar. 1, 1966, Ser. No. 530,988
8 Claims. (Cl. 242—129.7)

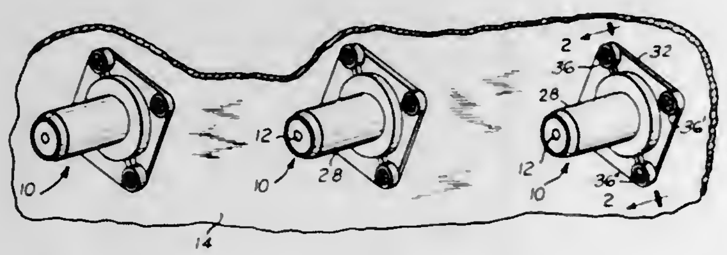

A spindle assembly for supporting a reel of wire or like material including a plurality of spaced magnetic coupling elements for drivingly securing the reel on the spindle. The magnetic coupling elements are mounted to permit limited angular movement for proper alignment with the associated reel.

3,396,920
APPARATUS FOR CHANGING THE ORIENTATION AND VELOCITY OF A SPINNING BODY TRAVERSING A PATH
Harold A. Rosen, Santa Monica, and Donald D. Williams, Inglewood, Calif., granted to National Aeronautics and Space Administration under the provisions of 42 U.S.C. 2457(d)
Filed Dec. 30, 1959, Ser. No. 862,921
2 Claims. (Cl. 244—1)

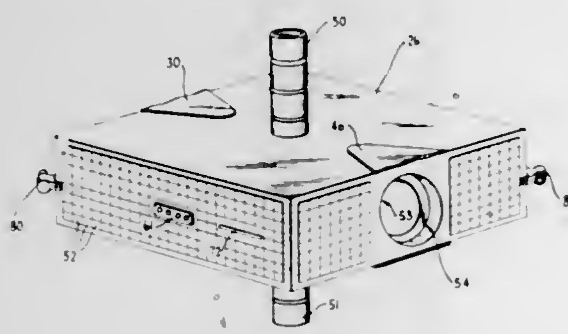

1. Apparatus for changing the linear velocity of a spinning body traversing a path comprising: a body adapted to traverse a path with a predetermined linear velocity and adapted to spin about an axis extending through the center thereof transverse to said path; means disposed in said body for developing a periodic orientation signal synchronized with the spin of said body; means disposed within said body and electrically connected to said last-named means for transmitting said orientation signal to a control point; means disposed in said body for receiving control signals from the control point; and means disposed within said body and coupled to said last-named means for applying impulses of a predetermined magnitude to said body during a predetermined portion of the spin cycle of said body about said axis and in a direction along a line normal to said axis that passes through the center of gravity of said body.

3,396,921
CONTROL DEVICES FOR FLEXIBLE WING AIRCRAFT
Francis M. Rogallo, 17 Milford Road, Newport News, Va. 23601
Filed Jan. 17, 1964, Ser. No. 338,537
8 Claims. (Cl. 244—43)

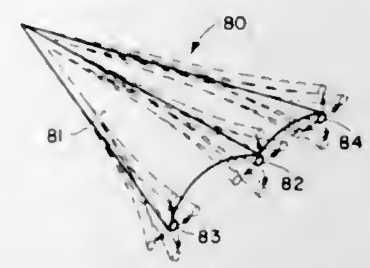

This is a control device for a flexible wing aircraft. The flexible wing aircraft has a triangular-shaped super-structure which includes a central keel member and angularly directed leading edge members connected to the apex of the keel. A flexible membrane-like material is fixed to the keel and leading edge members to form wing panels and a lift surface. The leading edge members and keel are made of a flexible material enabling flexure of the members to change the planform of the wing. Motivation mechanism is connected to the leading edge members and keel to flex the members and thereby control flight of the vehicle.

3,396,922
SPAR AND WING STRUCTURE THEREFROM
Leo J. Windecker, Midland, Tex., assignor to The Dow Chemical Company, Midland, Mich., a corporation of Delaware
Filed Nov. 21, 1966, Ser. No. 595,932
18 Claims. (Cl. 244—123)

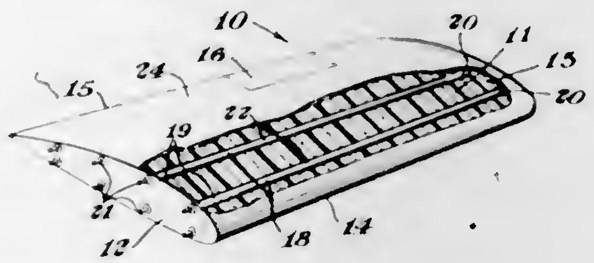

An airplane wing is disclosed having a foam plastic core, a continuous non-foamed skin and a number of spars within the wing, the spars being hollow tubes having a graduated layer of glass reinforced resin on the outer surfaces thereof which decreases in thickness toward the wing tip. Stubs secured in the tube provide for attachment of the wing to an aircraft body.

3,396,923
STRUCTURE AND METHOD FOR THE FABRICATION THEREOF
Leo J. Windecker, Midland, Tex., assignor to The Dow Chemical Company, Midland, Mich., a corporation of Delaware
Filed Nov. 21, 1966, Ser. No. 595,933
10 Claims. (Cl. 244—123)

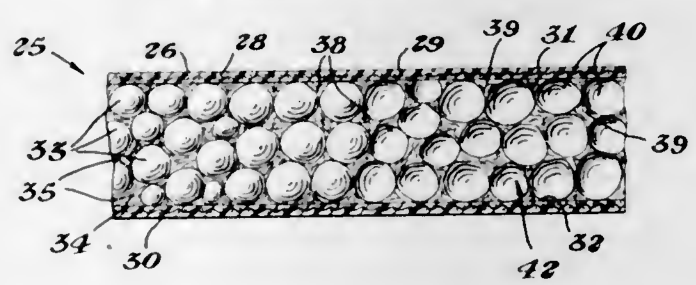

Permeable structures are readily prepared by forming a matrix of fiber reinforced resin about a number of contacting expandable synthetic resinous particles or beads and dissolving the beads from the matrix.

3,396,924
LOAD TRANSFER DEVICE
Marshall S. Kriesel, St. Paul, Minn., assignor to Aerospace Systems Company, Minneapolis, Minn., a corporation of California
Filed Apr. 22, 1966, Ser. No. 544,438
8 Claims. (Cl. 244—137)

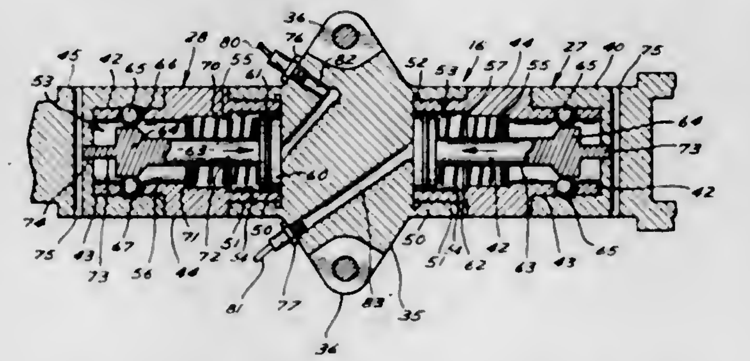

A load transfer device for use in connection with extraction and dropping of loads from aircraft including a member which has at least two relatively separable sections, and which is in turn attached to a load extraction and support parachute. A first section of said member is attached to the load so that force from the extraction chute will be transferred to the load through both the first and a second section of the member in a substantially horizontal direction to pull the load out of the aircraft. Remotely controlled latch means are provided for separating the two sections of the member. Upon separation, the second section only of the member transfers the force from the extraction and support parachute to the load, through second lines that support the load in direction vertically above it and are of length so they support the load only after separation of the sections. The latch means are shown as being electrically actuated release mechanisms that permit separation of the two sections of the load transfer member.

3,396,925
VIBRATION ISOLATOR
Robert J. Dickie, Maywood, and Jean Pierre Wilson, Fort Lee, N.J., assignors to General Precision Systems Inc., a corporation of Delaware
Filed Nov. 8, 1966, Ser. No. 592,937
8 Claims. (Cl. 248—26)

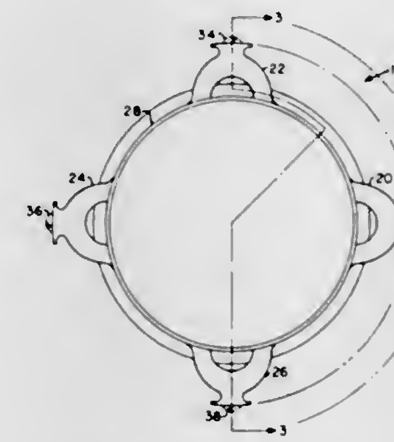

Vibration isolators, isoelastic along radial dimensions, are provided by semicircular arches of elastomeric material and wherein the arches are of uniform thickness along any arc portion. For isoelasticity also along the longitudinal axis of the isolator, the ratio of mean radius of the arch to its length must satisfy an equation in terms of the ratio of thickness to length of the arch.

Pluralities of the isolators may be disposed between support members such as concentric rings so as to isolate one of the rings from the vibrations or shock of the other ring.

3,396,926
HITCH FOR PIGGYBACK TRAILER CAR
Robert Q. Shelton and Orum E. Seay, Duncan, Okla., assignors to Halliburton Company, Duncan, Okla., a corporation of Delaware
Filed Sept. 28, 1966, Ser. No. 582,622
10 Claims. (Cl. 248—119)

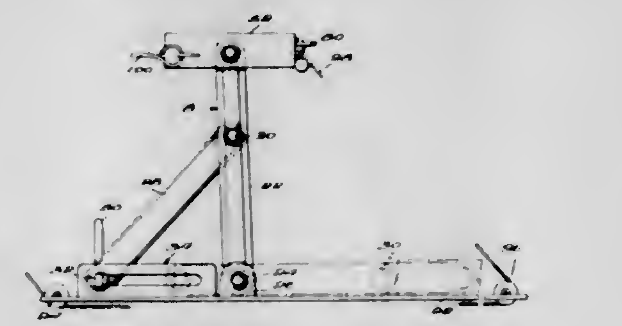

A stanchion for securing truck trailers on railway flatcars. The stanchion is collapsible and has a pair of support legs hingedly mounted on the base plate, with a brace hingedly mounted between the legs. The lower end of the brace is guided along a horizontal slot in upright brackets that are secured to the floor on opposite sides of the brace. When the lower end of the brace is positioned against an abutment at the outer end of the slot, the support legs are inclined slightly from the vertical in a direction to urge the lower end of the brace against the abutment. Thus, the load of the trailer on the legs maintains the stanchion in a locked position.

3,396,927
LEVELING DEVICE
Arlo B. Masters, 5277 Copeland Ave. NW., Warren, Ohio 44483
Filed Apr. 5, 1966, Ser. No. 545,198
3 Claims. (Cl. 248—188.2)

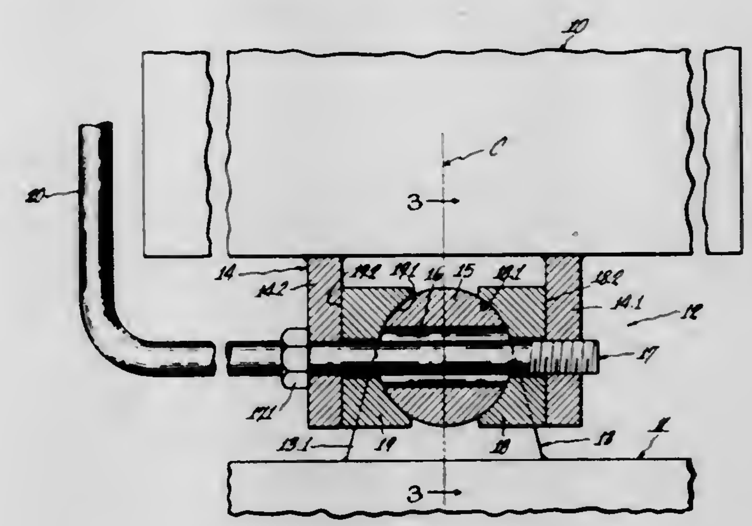

A device for securing an appliance to a floor whereby the former may be disposed in upright relation despite the floor being tilted from the horizontal. The device is adapted to be interposed between the appliance and the floor and includes means to selectively retain the appliance in selected, adjusted relation with the floor.

3,396,928
LEG MOUNTING
Ralph B. Lay, Columbus, Ind., assignor to Hamilton Cosco, Inc., Columbus, Ind., a corporation of Indiana
Filed July 15, 1966, Ser. No. 565,630
3 Claims. (Cl. 248—188.6)

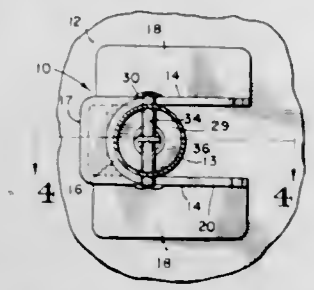

A leg mounting comprising a channeled bracket having a base provided with an opening and a pair of side walls have arcuately spaced recesses formed in their lower edges. A pivot pin extends between said walls and through a leg to swingably and slidably interconnect said bracket and leg. A second pin mounted on the leg is connected to said first pin by a spring and is adapted to be received in said recess whereby said leg is releasably lockable in a retracted position with said second pin being received in one pair of said recesses and an extended position with its upper end being received in said base openings and said second pin being received in another pair of recesses.

3,396,929
EASEL BRACKET FOR LADDERS
Robert C. Brown, 7212 Kensington Drive, Indianapolis, Ind. 46226
Filed Mar. 2, 1967, Ser. No. 620,014
3 Claims. (Cl. 248—211)

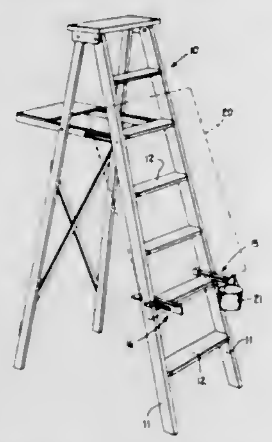

An easel attachment for a ladder which is made of sheet metal and includes a single hook which engages the back of the side stile of the ladder. The attachment has another hook adjustably mounted thereon and engageable with the front of the side stile. An upwardly projecting hook is integral with the attachment for retaining screens, a bucket of paint or the like.

3,396,930
SUPPORT PENETRATING BRACKET
Dragutin Ivan Gregorovic, 1 Quai Marcellis, Liege, Belgium
Filed Nov. 22, 1965, Ser. No. 509,093
Claims priority, application Belgium, Nov. 30, 1964, 656,476
11 Claims. (Cl. 248—216)

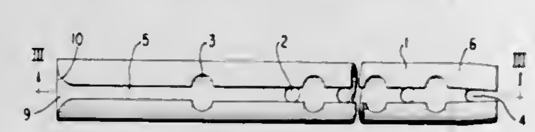

A supporting device adapted to be received in a wall recess or the like comprising a slit tube having a line of perforations diametrically opposed to the slit and thereby simultaneously imparting a greater degree of elasticity to the tube and providing edge portions to increase the holding effect of the tube within the recess.

3,396,931
WEIGHT-BALANCED ADJUSTABLE RADIATION APPARATUS
Emil L. Eckstein, 27002 Whitestone Road, Palos Verdes Peninsula, Calif. 90274
Filed July 21, 1965, Ser. No. 473,604
8 Claims. (Cl. 248—280)

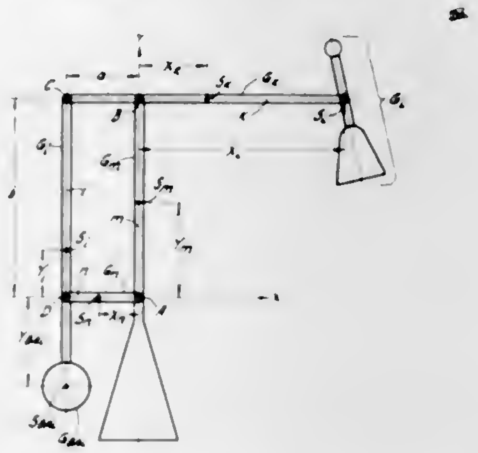

1. Adjustable radiation apparatus comprising a parallelogram linkage with the links thereof pivotally connected, a radiation device mounted on an extension of a first link, a balance weight mounted on an extension of a second link pivotally connected to the first link, and mounting means pivotally supporting the whole linkage at a joint oppositely across the parallelogram from the joint connecting the first and second links, the center of gravity of each link and attachment lying on the link axis or displaced laterally thereof in alignment with the link axis with the displacement being parallel to the mounting pivot axis, and each one of the two sums of all weight-torque moments about the axis of the supporting joint having the levers thereof taken with reference to two arbitrary directions through the supporting joint being equal to zero.

3,396,932
ROTATING ARTICLE DISPLAY MOUNT
Case J. Slaga, Hinsdale, Ill., assignor to Advertising Metal Display Co., Cicero, Ill., a corporation of Illinois
Filed Sept. 29, 1966, Ser. No. 582,992
5 Claims. (Cl. 248—349)

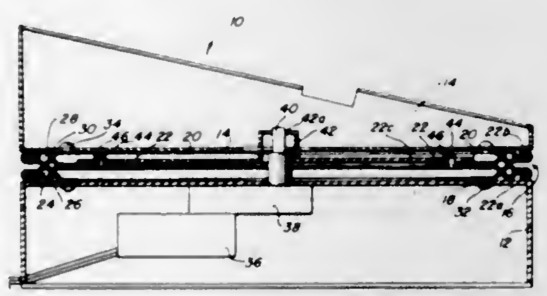

The rotating article display mount has a base with a first annular sheet metal disc attached thereto, and a second annular sheet metal disc is attached to the article-supporting fixture. A sheet metal driven member is disposed between the two annular discs, and the peripheral portions thereof are formed about the edges of the discs so that the discs and the driven member are held in proximate assembled relationship but are permitted to rotate relative to one another. A first annular ball bearing raceway is disposed remote from and concentric with the axis of rotation of the driven member and is formed partially by the first annular disc and partially by the driven member. A second annular ball bearing raceway which is in abutting, vertically aligned, concentric relationship with the first raceway is formed partially by the second annular disc and partially by the driven member, and ball bearings are disposed in the two raceways. A load force applied to the article-supporting means is thus transmitted directly through the raceways and the ball bearings to the base. An electric motor in the base rotates the driven member about its axis with respect to the base.

3,396,933
FURNITURE LEG CONSTRUCTION
Obediah C. Ward, 1228 Berkwood Road, Baltimore, Md. 21206
Filed Oct. 31, 1967, Ser. No. 679,423
6 Claims. (Cl. 248—431)

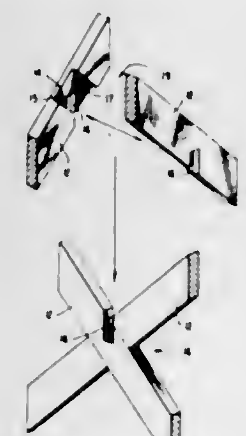

A furniture support device having at least two identical assembled leg units, each of the units having two leg elements provided with a transverse recess intermediate the ends thereof and a notch extending angularly inward from one edge of the leg in the area adjacent the recess so that when the legs are assembled, the recesses and notches cooperate to form a locking lap joint.

3,396,934
VINYL MOLD MAKING APPARATUS
Jack Ferris, % Jewelry Aids Co., 130—140 227th St., Laurelton, N.Y. 11413
Filed June 10, 1966, Ser. No. 556,689
7 Claims. (Cl. 249—163)

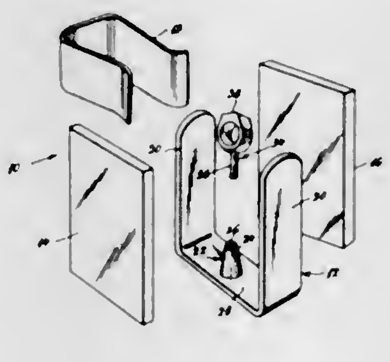

1. Apparatus for making molds including a metal U-shaped frame, plates closing the sides of the frame, means for holding the plates against the side edges of the frame, a sprue member mounted on the top surface of the bight portion of the frame, centrally thereof, said sprue member having a central socket at the top thereof, a gate-forming round rod fitted in said central socket and upstanding therefrom and a metal model to be duplicated supported on the top of said gate forming rod, said frame and plates defining a cavity having an open top for receiving plastic molding material.

3,396,935
METAL INGOT MOLD WITH PROTECTIVE COATING
William T. Snyder, Flossmoor, Ill., assignor to Nalco Chemical Company, Chicago, Ill., a corporation of Delaware
No Drawing. Original application Aug. 27, 1965, Ser. No. 483,301. Divided and this application Aug. 10, 1967, Ser. No. 659,621
2 Claims. (Cl. 249—174)

An improved metal mold for casting ingots which has its base member coated with a thin protective film of refractory material.

3,396,936
MULTI-UNIT TIE ROD FOR A CONCRETE WALL FORM
George F. Bowden, Des Plaines, Ill., assignor to Symons Mfg. Company, Des Plaines, Ill., a corporation of Delaware
Filed Oct. 24, 1965, Ser. No. 504,830
3 Claims. (Cl. 249—214)

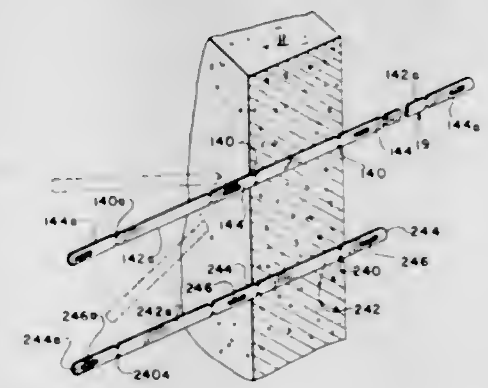

A multi-unit rod designed for use in successive concrete wall form installations and wherein the protruding end portions of the first installation are reclaimable for use in subsequent installations without modification by breaking them away from the poured and hardened concrete of such first installation.

3,396,937
LATCH MECHANISM FOR SPRAY GUN
Franklin M. McDougall, Kirkwood, Mo., assignor to Standard Machine & Manufacturing Company, St. Louis, Mo., a corporation of Missouri
Filed Mar. 28, 1966, Ser. No. 537,944
9 Claims. (Cl. 251—107)

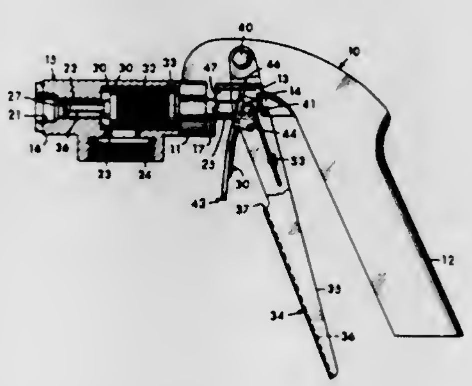

1. In a hand gun dispenser:
(a) a body,
(b) a valve means carried by the body,

(c) a valve-actuating means carried by the body and operatively connected to the valve means, the valve-actuating means being manually movable between limits from a valve-closed position to valve-opened positions,
(d) a latch means carried by the valve-actuating means and including a catch abutment, and
(e) a resilient pad carried by the body and engageable by the catch abutment to lock the valve-actuating means selectively in a valve-opened position.

3,396,938
VALVE ACTUATING DEVICE
Teruhiko Matsui, Kawasaki, Japan, assignor to Maenaka Valve Works Co., Ltd., Tokyo, Japan
Filed Dec. 8, 1965, Ser. No. 512,341
Claims priority, application Japan, Aug. 7, 1965, 40/47,842
2 Claims. (Cl. 251—229)

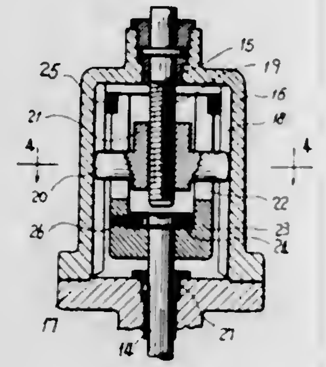

A device for opening or closing a valve or for locking the valve in any position between the open and closed positions, the device includes a handle to turn the valve, and a slotted bushing, pins on the handle member being confined to movement in the slots to effect opening or closing of the valve with very little effort.

3,396,939
HIGH-PRESSURE BLEED VALVE
Adam J. Hettich, Orange, Calif., assignor, by mesne assignments, to James, Pond & Clark, Incorporated, Anaheim, Calif., a corporation of California
Filed Apr. 25, 1966, Ser. No. 544,903
6 Claims. (Cl. 251—253)

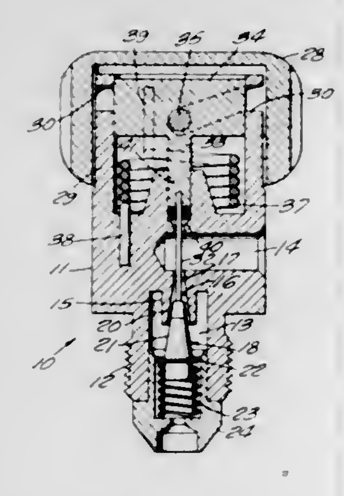

1. A high-pressure bleed valve having a main body provided with a generally L-shaped flow passage therethrough having an inlet leg and an outlet leg and including flow port means adjacent the junction of said legs, said port means including a long slightly tapered flow passage diverging toward the inlet end of said inlet leg and with its smaller end having a relatively short cylindrical section opening into said outlet leg, a long valve member reciprocably supported in said port means comprising a metallic tip and a substantially larger main body of elastomeric material highly resistant to erosion by high-velocity fluid flow therepast and each having its sides tapering at the same angle as the juxtaposed walls of said port means and cooperating therewith when seated firmly thereagainst to provide a long frusto-conical sealing surface, spring means in the inlet leg of said flow passage engaging the upstream end of said valve member and urging the same toward seating engagement with said port means, means for opening said valve member including cam-actuated plunger means supported axially of said port means on the downstream side thereof and having a small diameter end centrally of the cylindrical outlet end of said port means and movable into abutment with the metallic tip of said valve member to open the same against the high-pressure fluid normally acting against the upstream end thereof, and the small diameter end of said plunger cooperating with the juxtaposed wall of the cylindrical section of said port means to provide an annular flow passage of substantially smaller area than the area of the annular flow passage between the side wall of the elastomeric portion of said valve member, when open, and the juxtaposed wall of said port means, thereby to limit the flow velocity past said elastomeric material to reduce the erosive effects of fluid flow thereon.

3,396,940
PACKLESS VALVE WITH ANTI-FROST MEANS
Evan Jones, Evanston, Ill., assignor to Henry Valve Company, Melrose Park, Ill., a corporation of Illinois
Filed Feb. 17, 1966, Ser. No. 528,285
4 Claims. (Cl. 251—335)

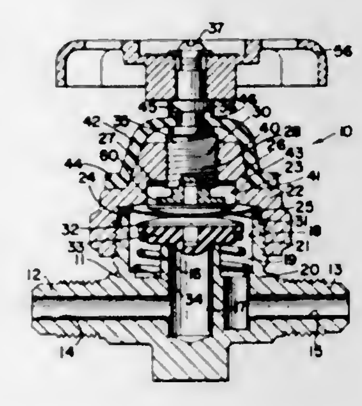

1. A diaphragm-type valve comprising a valve body provided with inlet and outlet ports in communication with each other through an interposed valve seat, a valve element in said valve body including sealing means movable into engagement with said valve seat to interrupt fluid communication between said ports, a valve bonnet joined to said valve body, a valve stem threadedly mounted in said valve bonnet for rotational and reciprocating movement within said valve body, said valve stem at its inner end being engaged with said sealing means to move the same toward and away from said valve seat, said sealing means including diaphragm means sub-dividing the interior of said valve body into a stem receiving area and a fluid flow area wherein said valve seat is located, a flexible impervious cup-like seal cap means having an enlarged open end fluidtightly received around a portion of said valve bonnet, an opening in said cup-like seal cap means through which said valve stem fluidtightly extends, said diaphragm means and said cup-like impervious seal cap means defining with said bonnet a volume which remains substantially constant regardless of the position of said valve stem.

3,396,941
UNDERWATER MOTOR
William R. Crawford III, 3316 E. 14th St., Long Beach, Calif. 90804
Filed Oct. 23, 1967, Ser. No. 677,244
2 Claims. (Cl. 253—1)

A motor is provided for underwater use. Power is supplied by a stream of water suitably directed against an impeller carried on a drive shaft. Rotation of the drive

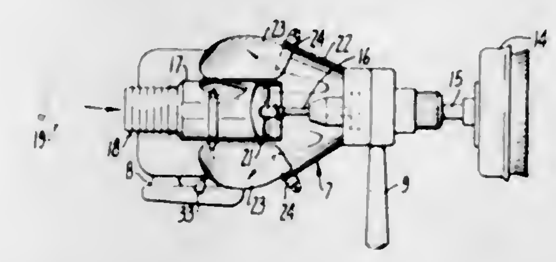

shaft is effective to drive a spindle carrying a tool of any suitable design such as a drill, a grinding disc or a brush. Water discharged past the impeller is suitably directed away from the device in such fashion as to provide a reverse torque. Thus, an operator holding the device in position under water merely has to support the device against gravity and does not have to offset the torque applied to the tool spindle.

3,396,942
ROTARY BLADED MACHINES
James Lansdowne Norton, Bristol, England, assignor to Bristol Siddeley Engines Limited, Bristol, England, a British company
Filed Aug. 29, 1967, Ser. No. 664,204
5 Claims. (Cl. 253—59)

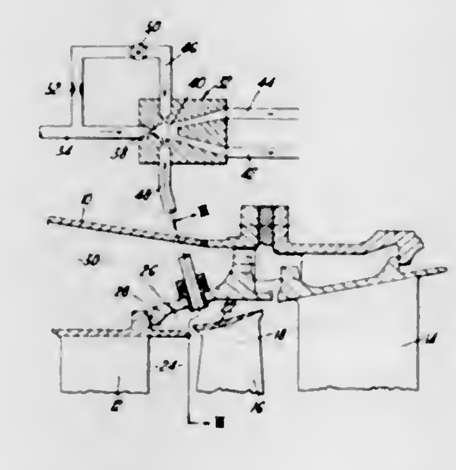

A rotary-bladed fluid-flow machine fitted with a device which actuates a danger signal when the peak value of the pressure fluctuations which occur immediately radially outwards of a ring of rotor blades and which are sensed by a tapping through the casing, exceeds a predetermined value, said device, for example, being a bistable fluidic switch in which the throughflow can be latched over a biasing flow which is connected to the tapping, when the pressure of the biasing flow exceeds, for at least the moment, said predetermined value.

3,396,943
CONCRETE PRESTRESSING APPARATUS (JACK)
James W. Howlett, Richmond Annex, Calif., assignor to Howlett Machine Works, a corporation of California
Original application Aug. 16, 1963, Ser. No. 302,628, now Patent No. 3,343,808, dated Sept. 26, 1967. Divided and this application Sept. 20, 1967, Ser. No. 669,121
3 Claims. (Cl. 254—77)

The invention described herein particularly shows an improved jacking means especially conceived for applying an inwardly directed force on a pair of separated concrete prestressing tendons so as to draw the tendons together for engagement under high tension. The jacking

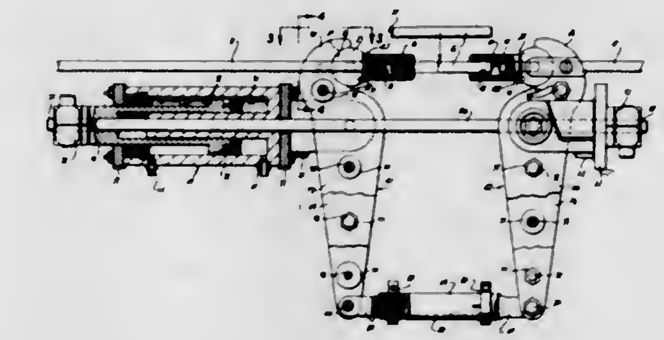

means is characterized by a pair of spaced bifurcated jaws adapted for passing along rod or bar tendons while engaging one-way gripping stops arranged along the bar tendons.

3,396,944
JACKING SYSTEMS FOR USE IN THE CONSTRUCTION OF BUILDINGS
Joost Werner Jansz, The Hague, Netherlands, assignor to Richard Costain Limited, London, England, a British company
Continuation-in-part of application Ser. No. 454,367, May 10, 1965. This application Mar. 28, 1966, Ser. No. 537,975
Claims priority, application Netherlands, May 8, 1964, 6405158; Great Britain, Mar. 31, 1965, 13,738/65
11 Claims. (Cl. 254—89)

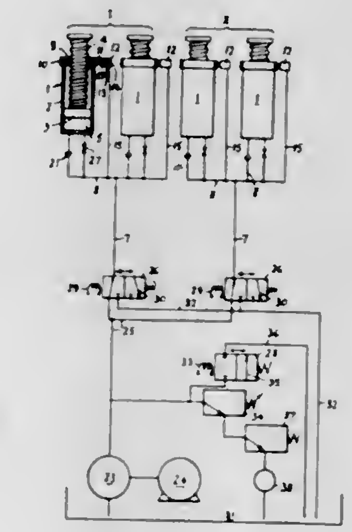

The present invention relates to a jacking system for use in the construction of buildings in which the vertical and horizontal structures of each successive storey, starting from the top storey downwards, are constructed at or near ground level and subsequently raised by a plurality of jacking devices (together with all the completed storeys thereabove) to permit the construction of the vertical and horizontal structures of a further storey therebeneath. The jacking system includes horizontal level control means for maintaining the floors at all times in a near-perfect horizontal plane during the jacking operation. This is achieved by controlling the jacking devices so that when a jacking device rises through only a small predetermined substep of the order of ½ mm. it is stopped from rising further until all the jacking devices have been raised through the predetermined small substep.

3,396,945
MOUNTING FOR ELEVATED PLATFORM
Kurt Schreier, Breitenfurt, near Vienna, and Johann Loibl, Vienna, Austria, assignors to Schoeller-Bleckmann Stahlwere Aktiengesellschaft, Vienna, Austria, a corporation of Austria
Filed Aug. 1, 1966, Ser. No. 569,428
Claims priority, application Austria, Aug. 2, 1965, 7,099/65
8 Claims. (Cl. 254—106)

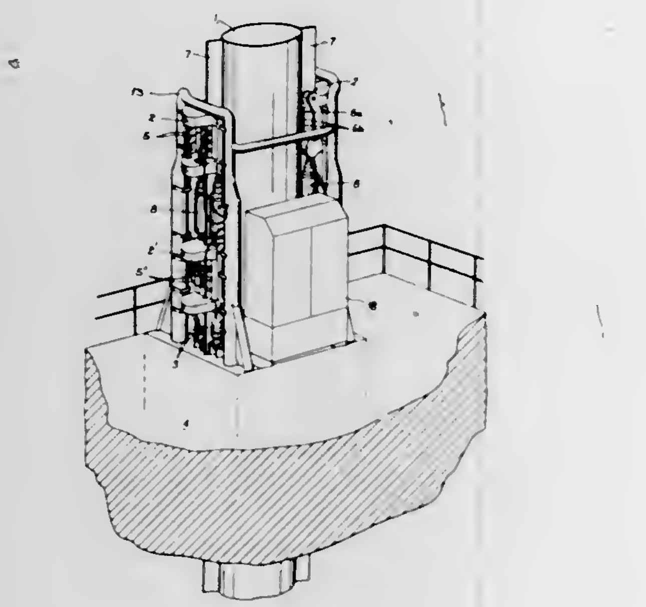

A mounting for elevating and lowering a platform along an upright support, with two sets of grippers selectively engageable with a vertical rib on the support and with a frame on the platform bracketing the housings of the two sets of grippers, one housing being linked directly to the platform while the other is connected with the first housing by means of hydraulic or pneumatic jacks and is slidably guided in the frame.

3,396,946
ATTACHMENT FOR A BACKHOE OR OTHER VEHICLE
William E. Maddock, Bicknell, Ind., assignor of one-half to Garrel O. Day, Bicknell, Ind.
Filed Jan. 23, 1967, Ser. No. 610,872
7 Claims. (Cl. 254—189)

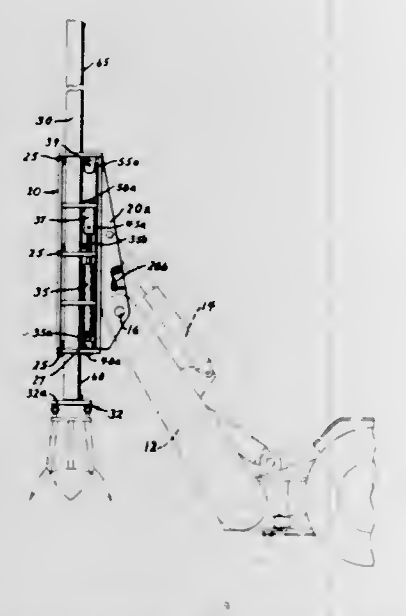

An equipment attachment for various end purposes having a movable mast hydraulically controlled with high mechanical advantage through a piston and cable arrangement and operable horizontally, vertically or at any desired angle with respect to ground level, where provision is made for reducing or eliminating cable slack during usage.

3,396,947
VIBRATION DEVICE
Carl-Goran Heden, Solna, Sweden, assignor to Biotec Aktiebolag, Stockholm, Sweden, a joint-stock company of Sweden
Filed Sept. 15, 1967, Ser. No. 667,897
Claims priority, application Sweden, Sept. 19, 1966, 12,594/66
3 Claims. (Cl. 259—72)

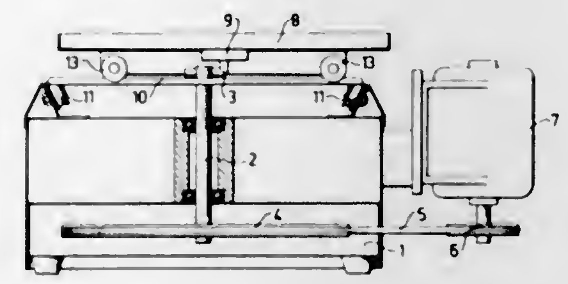

A shaking machine having a circular translatoric shaking movement and comprising a base, a vertical rotatable shaft journalled in the base and provided with an accentric at its upper end, and a horizontal shaking table adapted to carry the material or the objects to be shaken movably supported from the base member and coupled to the shaft through the eccentric. The supporting means for the shaking table comprise a horizontal rigid rectangular frame, which is linearly movably supported from the base member through runner means, as for instance wheels, guided by and movable along two opposite and parallel sides of the frame. The shaking table is in a similar manner linearly movably supported from the frame through other runner means, as for instance wheels, guided by and movable along the two remaining opposite and parallel sides of the frame.

3,396,948
CARBURETOR AIR VALVE VACUUM DAMPER
Ernest R. Stettner, Spencerport, N.Y., assignor to General Motors Corporation, Detroit, Mich., a corporation of Delaware
Filed Oct. 14, 1966, Ser. No. 586,853
2 Claims. (Cl. 261—23)

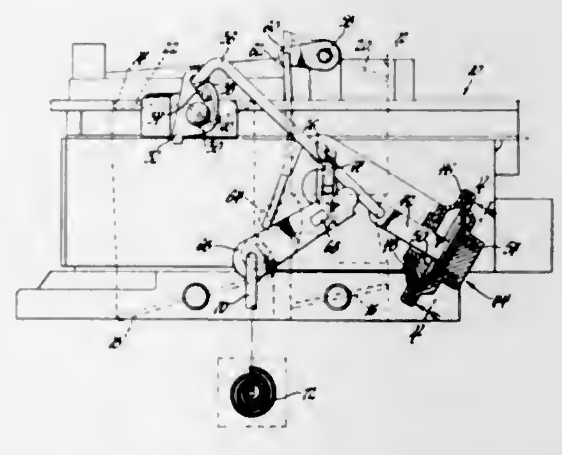

A four-barrel, multiple-stage carburetor has a pair of plain tube primary mixture conduits and a pair of air valve secondary mixture conduits. A single unit provides vacuum break of the choke in the primary mixture conduits and vacuum damping of air valve opening movement.

3,396,949
AERATOR FOR WATER-CONTAINING VESSEL
Nicholas Tsarnas, 2724 Linden Blvd., Brooklyn, N.Y. 11208
Continuation-in-part of application Ser. No. 433,124, Feb. 16, 1965. This application Mar. 22, 1967, Ser. No. 626,363
2 Claims. (Cl. 261—64)

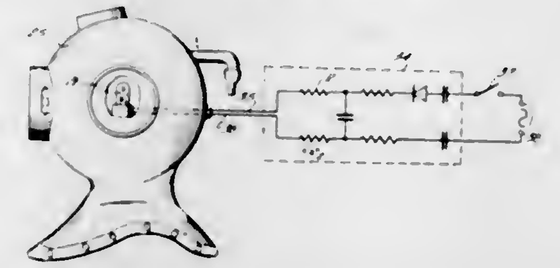

The aerator includes a structure having a specific gravity greater than water to enable it to be continuously submerged in a water-containing vessel. The structure is provided with a manually controllable valve located on the surface thereof, and a conduit is connected at one end to the valve and is connectible at the other end thereof to an air supply source. As added features, illuminating means are provided in the structure, and suitable circuitry for intermittently energizing the same.

3,396,950
DIFFUSER FOR SEWAGE TREATMENT
Elmer R. Wood, 8666 Broadview Road, Cleveland, Ohio 44141
Filed Jan. 16, 1967, Ser. No. 609,403
3 Claims. (Cl. 261—122)

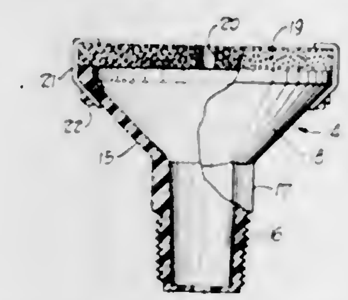

This invention is directed to sewage treatment means and particularly to a diffuser, which diffuser incorporates therein means to distribute fine bubbles of air or the like through a sewage mixture to assist in the digestion process, and at the same time to provide means for directing to said mixture simultaneously a heavy stream of air or the like which will effectively roll the mixture so as to assist in the supplying of oxygen to make the process more effective.

3,396,951
EMERGENCY ATMOSPHERE ANNEALING FURNACE AND METHOD
F. Troy Cope, Salem, and Ralph J. Perrine, Columbiana, Ohio, assignors to The Electric Furnace Company, Salem, Ohio, a corporation of Ohio
Filed Aug. 25, 1965, Ser. No. 482,381
8 Claims. (Cl. 263—3)

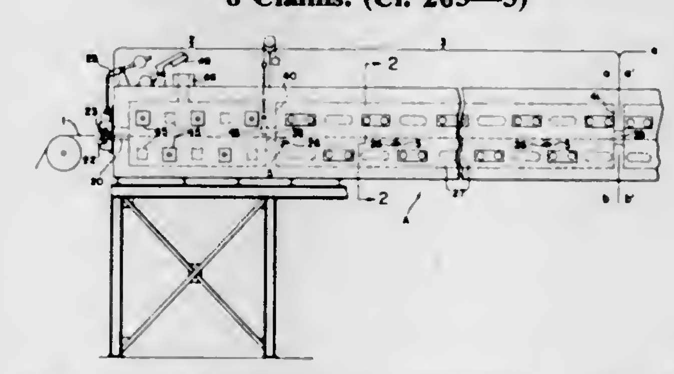

Method and apparatus for protecting a strip of metal moving continuously through a heating zone, against excessive oxidative degradation during longer than normal residence in the heating zone, including a control system responsive to a reduction in strip speed which purges the oxidizing ingredients in the heating zone atmosphere with a protective gas.

3,396,952
APPARATUS AND PROCESS FOR PRODUCING CALCINED PHOSPHATE FLAKES
George J. Jennrich, Milwaukee, and William A. Blann, New Berlin, Wis., assignors to Allis-Chalmers Manufacturing Company, Milwaukee, Wis.
Filed Mar. 10, 1967, Ser. No. 622,254
14 Claims. (Cl. 263—32)

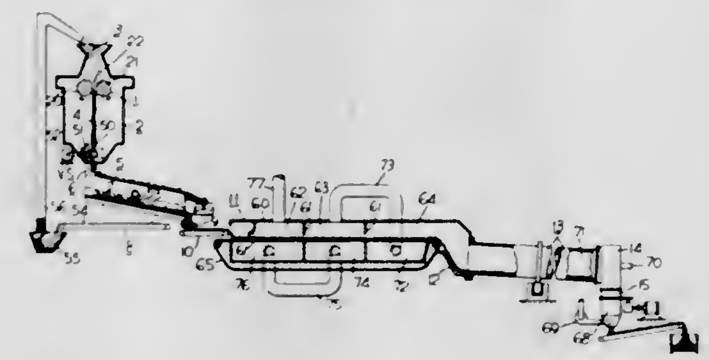

A system for making calcined flakes from a material containing a mineral, such as phosphate and some carbonaceous material, in which the material is prepared to have a particular free moisture content, is then pressed in a sheet by pressure controlled to provide in the sheet a particular internal voids to solids ratio, the sheet is broken into flakes of a particular size relative to flake thickness, the flakes are dried by heating to a temperature below calcining temperature at least until moisture in the flakes is vaporized and driven from the flakes, and the dried flakes are then heated above calcining temperature at least until the carbonaceous material is oxidized to carbon dioxide gas and driven from the flake.

3,396,953
KILN
Dean E. Sandbrook, Norwalk, Conn., assignor to United States Steel Corporation, a corporation of Delaware
Filed Dec. 22, 1965, Ser. No. 524,649
13 Claims. (Cl. 263—33)

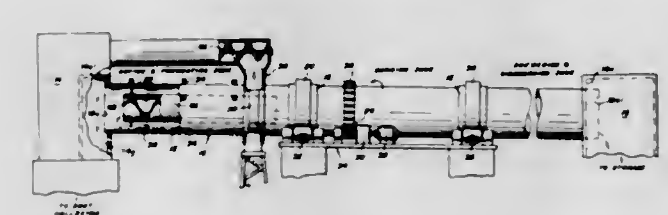

This improved rotary inclined kiln has an outer inclined member rotatable on the frame. An inner inclined member is disposed within the outer inclined member. A screw member is on one of the outer inclined member and the inner inclined member, the screw member and the one form a conveying and heat exchanging means. Feed means are disposed adjacent the outer inclined member and the inner inclined member for introducing the material into the one at the low hot end of the kiln. Heat producing means are disposed adjacent the low hot end for introducing heat to the outer inclined member and the inner member. The conveying and heat exchanging means are operable to move the material to the upper relatively cooler end of the one and to function as a heat exchanger between the material and the heat. The other of the outer

inclined member and the inner inclined member is adapted to receive the raw material at the upper relatively cooler end and move the material to the low hot end.

3,396,954
GAS-CURTAINED ELECTRIC SMELTING FURNACES AND METHOD OF COLLECTING REACTION GASES THEREOF
Harald Krogsrud, Gjettum, Norway, assignor to Elektrokemisk A/S, Oslo, Norway
Filed Mar. 11, 1966, Ser. No. 533,716
19 Claims. (Cl. 263—50)

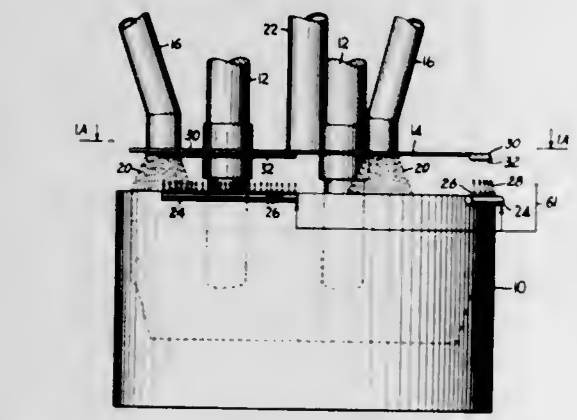

An electric smelting furnace, having an open furnace pot, a roof spaced vertically above the opening of the pot, and overhead chutes leading to openings in the roof for feeding charge material into the pot and for withdrawing furnace reaction gases, is provided with at least one gas manifold constructed and arranged to generate a curtain of flowing gas in the outer periphery of the vertical space between the pot and the roof, when air or other gas is pumped into the manifold. The gas curtain seals that portion of the vertical space between the pot and the roof which it traverses, whereby penetration of such space by furnace reaction gases from one side or by the surrounding atmosphere from the opposite side is substantially prevented. The gas curtain thus acts as a window which allows visual observation of and direct mechanical access to the interior furnace operation and continuous feeding of charge and withdrawal of reaction gases, without interruption of the gas curtain or of the furnace operation.

3,396,955
DIFFUSION FURNACE WITH TRANSPORT MEANS
Robert G. Martinek, Watertown, Wis., assignor to Basic Products Corporation, Milwaukee, Wis., a corporation of Wisconsin
Filed Oct. 4, 1965, Ser. No. 492,794
5 Claims. (Cl. 266—1)

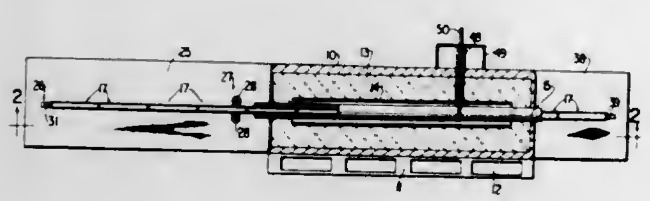

A diffusion furnace consisting of a refractory housing with a hollow heating element embedded therein and a tubular heating element arranged concentrically within the heating element having track means therein. Boat means conforming in cross section to that of the heating chamber are pushed in abutting relationship along the track means whereby gases introduced into the heating chamber are caused to diffuse into the material being transported therethrough in the boat means.

3,396,956
MACHINE FOR BENDING AND HARDENING LEAF SPRINGS
Fritz Hildebrand, Werdohl, Westphalia, Germany, assignor to Stahlwerke Bruninghaus G.m.b.H., Westhofen, Westphalia, Germany, a corporation of Germany
Filed Feb. 4, 1966, Ser. No. 525,204
Claims priority, application Germany, Feb. 5, 1965, St 23,322
7 Claims. (Cl. 266—6)

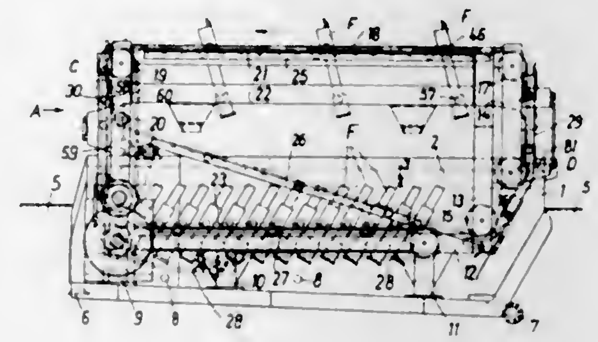

A machine for bending and hardening leaf springs has a series of independently operable frames, a bath, a conveyor to move the frames through the bath, and means for operating the frames to close and to open them.

3,396,957
CUTTING TORCH MOUNT
Edwin C. Rowland, 11650 W. 26th Ave., Denver, Colo. 80215
Filed Sept. 16, 1965, Ser. No. 487,872
10 Claims. (Cl. 266—23)

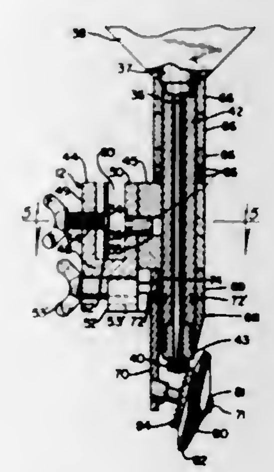

A cutting torch mount avoids necessity of a separate carriage structure and permits more accurate cutting through utilization of a drive wheel adapted to engage the work in centered relation to the drive shaft axis, and the cutting torch is releasably supported in journaled relation to the drive shaft so as to more accurately follow or precede the advancement of the drive wheel along any straight, curvilinear or angular path.

3,396,958
APPARATUS FOR RECOVERING AN UNBURNT WASTE GAS IN AN OXYGEN TOP-BLOWING CONVERTER
Shigeru Maehara and Isoji Igarashi, Yawata District, Fukuoka, Japan, assignors to Yawata Iron & Steel Co., Ltd., and Yokoyama Engineering Co., Ltd., Tokyo, Japan, both corporations of Japan
Filed Apr. 22, 1963, Ser. No. 274,546
2 Claims. (Cl. 266—31)

1. An apparatus for recovering from an oxygen top-blowing converter waste gas in an unburned state, which comprises a vertical hood adapted to be positioned in close contact with the top part of the converter and an oblique hood connected to said vertical hood, said oblique hood being adapted to be connected with a cooler, the interior of the walls of said hoods having water pipes lining them, and a good heat conducting graphitic refractory material layer covering said water pipes and forming the inside surface of said hoods and being pres-

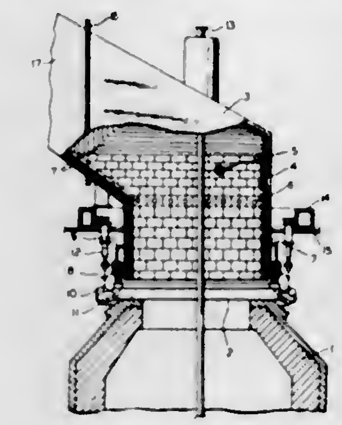

ent in such a thickness that substantially no temperature difference exists between the surface of the refractory material on the inside of the hoods and the portion of the material in contact with the water pipes during gas recovery.

3,396,959
CUPOLA FURNACE WITH NONCORROSIVE OUTER COATING
Fred L. Brown, Chicago, Ill., assignor to Interlake Steel Corporation, a corporation of New York
Filed Aug. 13, 1964, Ser. No. 389,416
12 Claims. (Cl. 266—32)

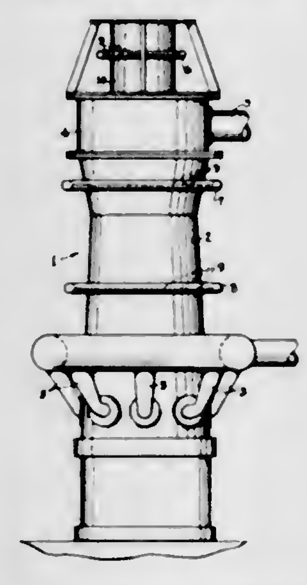

1. In a cupola furnace of a type having a chamber for enclosing a metal charge, means for heating the metal charge, said chamber being confined by a shell and means to cool the shell by means of a liquid coolant directed to flow along its outer surface, comprising, said shell having a base layer of ferrous metal coated with aluminum metal.

3,396,960
METHOD OF AND APPARATUS FOR INSPECTION AND CONTROL OF THE REACTION PERFORMANCE DURING THE OXYGEN BLOWING PROCESS
Jürgen Maatsch and Kurt Borowski, Essen, Germany, assignors to Beteiligungs- und Patentverwaltungsgesellschaft mit Beschrankter Haftung, Essen, Germany, a corporation of Germany
Filed Dec. 20, 1965, Ser. No. 515,048
Claims priority, application Germany, Dec. 30, 1964, B 79,949
5 Claims. (Cl. 266—34)

An apparatus for inspection and control of the reaction performance in a converter during the oxygen blowing process of refining molten metal comprising a hollow blowing lance for passing pressurized oxygen therethrough, and a metallic conducting member extending axially through and beyond the discharge end of the lance supported and insulated from the walls thereof.

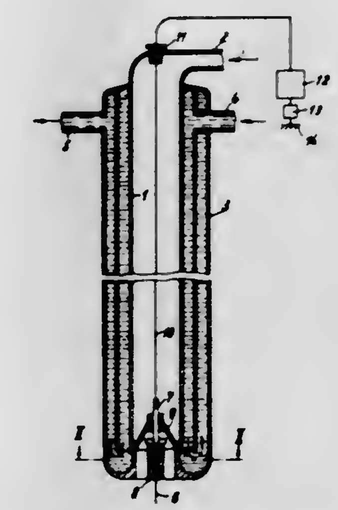

A means for measuring electrical conductivity is provided and an electrical conducting wire extends axially through the lance connecting the conducting member and the means for measuring electrical conductivity.

3,396,961
PRECAST TAPHOLE ASSEMBLY
Grant M. Farrington, Marlton, N.J., assignor to General Refractories Company, Philadelphia, Pa., a corporation of Pennsylvania
Filed Aug. 9, 1965, Ser. No. 478,047
2 Claims. (Cl. 266—42)

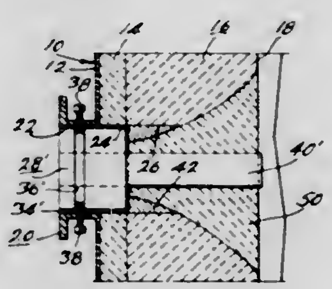

A precast taphole assembly for a vessel adapted for the containment and discharge of molten metal and having a metal shell, a refractory lining within the shell, and a taphole opening in the shell and lining. The invention comprises a replaceable taphole assembly for mounting in the vessel taphole opening and includes a precast refractory section adapted for mounting in closely fitting relation against the vessel metal shell, and a pipe extending through and projecting inwardly from the precast section. The pipe being adapted to extend interiorly through and in spaced relation to the refractory lining to permit the placement of refractory material between the pipe, precast section and the vessel lining.

3,396,962
BASIC OXYGEN FURNACE LINING CONSTRUCTION
Joseph W. Smith, 1520 Kansas Ave., McKeesport, Pa. 15131, and Charles W. Keene, 825 Catherine, Duquesne, Pa. 15110
Filed Sept. 6, 1967, Ser. No. 665,765
2 Claims. (Cl. 266—43)

This disclosure deals with construction for the bottom and knuckle-joint portions of the working lining of a basic oxygen furnace. The lining is built of three different

types of brick, two being conventional, and the third a simple adaptation of a conventional brick. These shapes

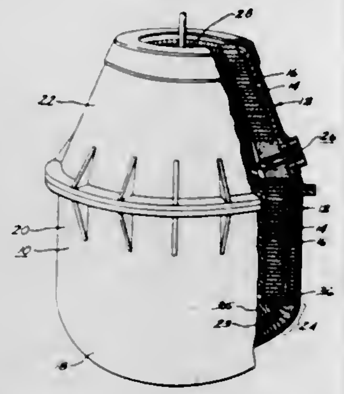

are a key, a straight, and a straight with one end cut on a bias.

3,396,963
RESILIENT CUSHION STRUCTURE
Alma A. Hutchins, 49 N. Lotus, Pasadena, Calif. 91107
Filed Dec. 30, 1966, Ser. No. 606,218
20 Claims. (Cl. 267—1)

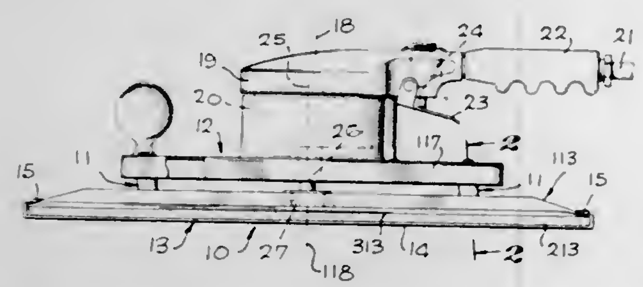

A power sander having a number of cushioning structures connecting a handle section to a power oscillated sandpaper carrying shoe, with each cushioning assembly including a body of elastomeric material having flanges at its opposite ends secured to the handle and shoe respectively by two pairs of gripping elements. Each of the flanges is tightly clamped axially between two of these gripping elements, against the yielding resistance offered by the elastomeric material of the flanges, and in a relation resiliently compressing the elastomeric material to a deformed condition and maintaining it under compression. One of the gripping elements of each pair extends across an end of the elastomeric body and has fingers which extend into engagement with the other gripping element of that pair in a manner holding the two elements in tight gripping engagement with the flange. Also, this finger carrying gripping element has an opening through which a mounting screw extends, in threaded engagement with the gripping element, and with the screw extending beyond the gripping element and into the body of elastomeric material itself.

3,396,964
SHEET FEEDING APPARATUS
Harald Fengler, Helmut Schausberger, and Franz Kocourek, Munich, Germany, assignors to Agfa-Gevaert Aktiengesellschaft, Leverkusen, Germany
Filed Sept. 20, 1966, Ser. No. 580,763
Claims priority, application Germany, Sept. 21, 1965, A 50,315
34 Claims. (Cl. 271—5)

A sheet feeding apparatus which comprises a support for the lower edges of a pile of stacked sheets, an abutment which is adjacent to the foremost sheet of the pile and maintains the sheets in an inclined position, and a stop adjacent to the lower edge of the foremost sheet. A suction cup is movable up and down and toward and away from the stack to move the foremost sheet of the pile along the adjoining sheet and thereupon over the

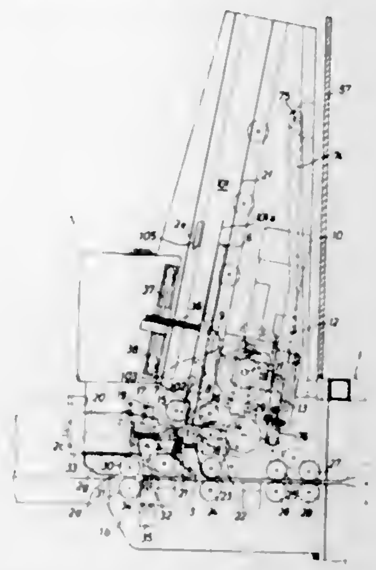

stop. The foremost sheet is then advanced along a predetermined path.

3,396,965
SENSOR GAUGE
James K. Dennis, Fairport, and Valdevutis C. Draugelis, Rochester, N.Y., assignors to Xerox Corporation, Rochester, N.Y., a corporation of New York
Filed Oct. 11, 1966, Ser. No. 585,884
2 Claims. (Cl. 271—64)

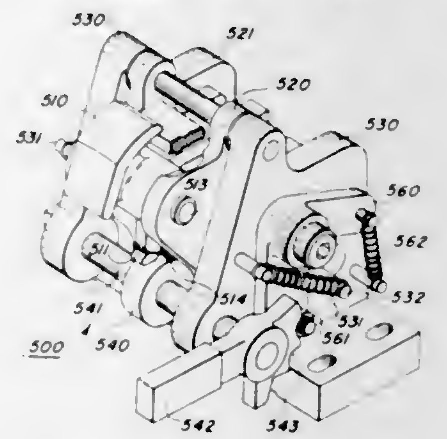

Apparatus for detecting superposed sheets fed by a sheet transport. The apparatus employs a sensor shoe rotatably supported in a frame member to define a spaced relationship between the sensor shoe and the sheet transport. The frame is rotatably supported in a stationary base member. The rotational position of the frame member relative to the base member may be changed through a cam and eccentric in controlled increments to adjust the aforementioned spaced relationship.

3,396,966
SHEET STACKING APPARATUS
Karsten Solheim, Phoenix, Ariz., assignor to General Electric Company, a corporation of New York
Filed Feb. 3, 1966, Ser. No. 524,696
10 Claims. (Cl. 271—86)

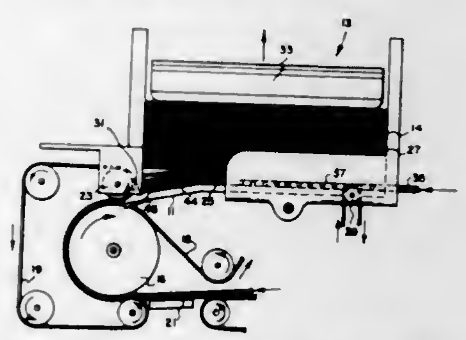

Apparatus for stacking sheets with provision to prevent previously stacked sheets from blocking the entry of a

sheet being placed at the bottom of a stack and to prevent a sheet being introduced into a stack from damaging a sheet previously placed at the bottom of the stack.

3,396,967
HAND, WRIST AND FORE-ARM EXERCISING DEVICE
Keith Morris Brown, 176 Liverpool Road, Kilsyth, Victoria, Australia
Filed Oct. 22, 1965, Ser. No. 501,280
Claims priority, application Australia, Aug. 16, 1965, 62,927/65
4 Claims. (Cl. 272—67)

1. An exercising device comprising a spindle and a pair of hand grip means, each hand grip means comprising a cylinder having a length substantially greater than its diameter, the diameter of one hand grip means being the same as the other, one hand grip means being non-rotatably mounted on one end of the spindle, screw threads on the other end of the spindle, the other hand grip means being threadably engaged with the said other end of the spindle, and a compression spring mounted on the spindle between the hand grip means to impose a load on the hand grip means resisting their relative rotation.

3,396,968
BALL ARRESTER
Anthony E. Ciccone, 39 Madison Ave., Fords, N.J. 08863, and Vincent F. Ciccone, Jr., 89 Grant St., Iselin, N.J. 08830
Filed Oct. 20, 1965, Ser. No. 498,702
10 Claims. (Cl. 273—39)

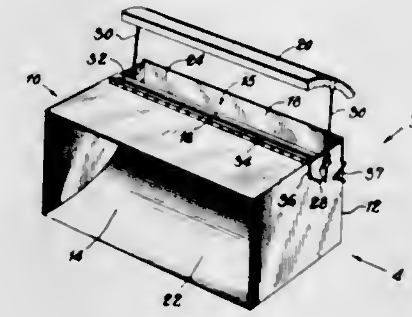

A bowling device including a chute having an inlet and an outlet and constructed to readily receive a hurled bowling ball. The chute has a relatively wide inlet and curves vertically upward from the inlet to the outlet so that the velocity of the hurled ball is considerably reduced as it travels along the chute due to the decelerating effect of gravity. In addition, the device is provided with at least one gate resiliently biased into the path of the ball along the chute for constricting the chute adjacent the outlet to a dimension less than the diameter of the hurled ball. The gate is opened by the momentum of the ball to permit the ball to pass through to the outlet. The action of the gate against the ball serves to further decelerate the ball and slow it sufficiently so that the ball comes to rest on a trough formed by the closed gate when the gate returns to the closed configuration.

3,396,969
FOOTBALL TRAINING DUMMY
Martin Rosenfeld, New York, N.Y., assignor to Premier Athletic Products Corporation, River Vale, N.J., a corporation of New Jersey
Filed Jan. 25, 1965, Ser. No. 427,771
3 Claims. (Cl. 273—55)

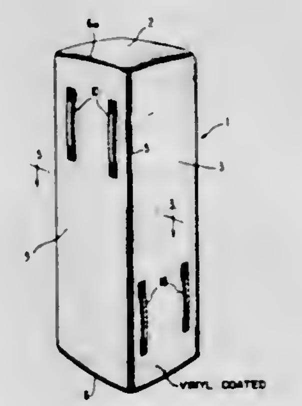

A football training dummy is made square in cross section, with flat, square end surfaces of the same size and shape as the cross section, and with hand holds provided on two adjacent sides each adjacent to one of the end surfaces, so that the dummy can be used with either end uppermost and wear in use is thus divided between two of the sides.

3,396,970
TENNIS BALL INCLUDING NEEDLE PUNCHED FABRIC COVER
Redmond Power Fraser, Jr., Greenwich, Conn., and Elbirt A. Woodward, Watch Hill, R.I., assignors to American Felt Company, Glenville, Conn., a corporation of Massachusetts
Filed Feb. 15, 1966, Ser. No. 527,706
2 Claims. (Cl. 273—61)

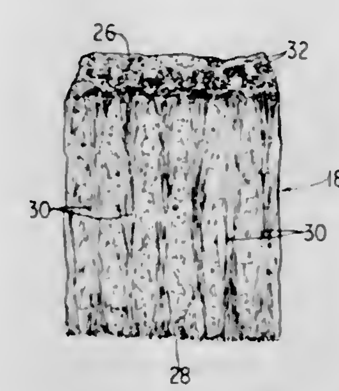

1. A tennis ball comprising a resilient spherical supporting member, a felt-like fabric cover member stretched over the outer surface of said supporting member, said fabric having a large number of fibers extending substantially perpendicular to the upper and lower surfaces of the fabric and needle-punched therefrom, and adhesive means adhering said cover member to said supporting surface.

3,396,971
ARCHERY TARGET OF BUNDLED PLASTIC RODS
Shelby L. Estep, Greentown, Ohio, assignor, by mesne assignments, to Victor Comptometer Corporation, Chicago, Ill., a corporation of Illinois
Filed Oct. 19, 1965, Ser. No. 497,925
8 Claims. (Cl. 273—102)

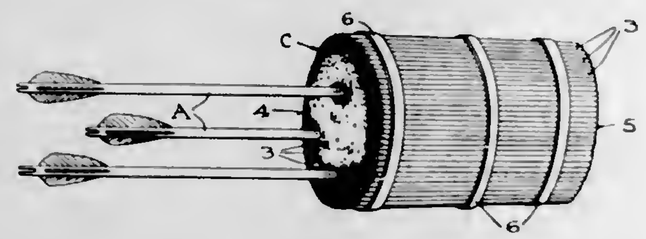

A target having a body comprising a plurality of bundled plastic rods held in compressive tension a progressively increasing degree from the face to the rear thereof whereby a projectile landed therein meets with constantly increasing resistance during penetration.

3,396,972
WORD CONSTRUCTION GAME APPARATUS HAVING NUMERICAL SCORING FEATURE
James A. Smith, Casablanca, Morocco (500 N. Wilson St., Metairie, La. 70003)
Filed Jan. 10, 1966, Ser. No. 519,487
6 Claims. (Cl. 273—135)

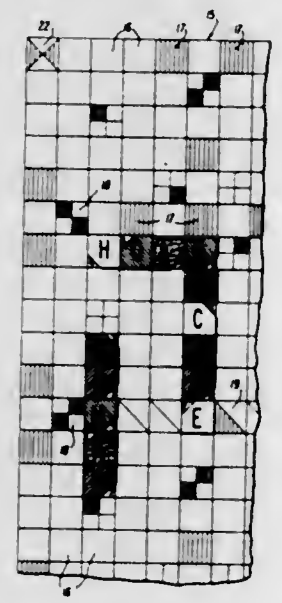

1. In a game apparatus, a game board having a playing surface which is divided into a multiplicity of substantially equally sized rectangular spaces, said spaces arranged in a plurality of vertical and horizontal rows, a large number of said spaces being uncolored and having scoring numerals at the four corners thereof, said numerals being of the same value in all of said uncolored spaces and differing in value from corner-to-corner of each uncolored space, another large number of said spaces being variously colored in a random pattern on the playing surface of the game board, said colored spaces having scoring numerals in the four corners thereof which scoring numerals are of the same value for all of said colored spaces and differing in value from corner-to-corner of each colored space, and a multiplicity of substantially rectangular game tiles having uncolored uniform bottom faces and variously solid colored top faces and being variously lettered on the top faces with all of the letters of the alphabet, each tile having a single diagonally cut away corner enabling the tile when placed upon one of said spaces to expose one only of said corner scoring numerals, different tiles having different single corners cut away, the coloring of said tiles adapted to match with the coloring of some of said colored spaces, whereby according to game rules the score represented by the exposed corner numeral may be multiplied.

3,396,973
RECORD ADAPTER SPINDLE
Douglas W. Smith, Benton Harbor, Mich., assignor to V-M Corporation, Benton Harbor, Mich., a corporation of Michigan
Filed Dec. 12, 1966, Ser. No. 601,103
20 Claims. (Cl. 274—10)

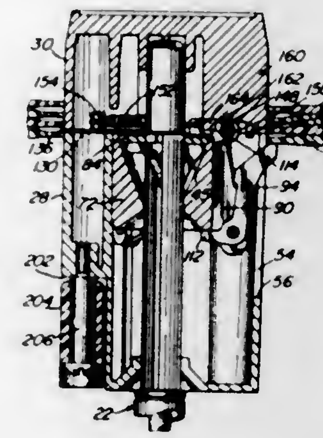

1. An adapter spindle for a record player having a center spindle adapted for supporting a plurality of small diameter center hole records and including vertically movable means for lowering one record at a time to a turntable during a record change cycle for playing, said adapter spindle comprising, in combination, an adapter body adapted to be mounted on and centered by the center spindle, support means mounted within said adapter body and cooperatively associated with the vertically movable means of the center spindle for movement therewith, a plurality of primary record support fingers mounted on said support means, said adapter body having first openings therethrough, said fingers being adapted to extend outwardly of said adapter body through said first openings for supporting a plurality of large center hole records on said adapter body and lowering the lowermost record to the turntable for playing, said adapter body having further openings above said fingers, and secondary record support blade means supported by said adapter body for rectilinear horizontal sliding movement in said further openings, said record support blade means being adapted for movement to a first position for supporting all but the lowermost record of the records disposed on said adapter body, and to a second position wherein said support blade means is not supporting said large center hole records, means for moving said record support blade means to said first position, and said finger support means including means for moving said record support blade means to said second position.

3,396,974
BELL AND SPIGOT PIPE JOINTS AND METHOD OF SEALING AND LOCKING PIPE JOINTS
Sten Nord, Finsta, Sweden, assignor to Forsheda Gummifabrik Aktiebolag, Forsheda, Sweden, a corporation of Sweden
Continuation of applications Ser. No. 175,554, Feb. 26, 1962, and Ser. No. 409,548, Nov. 6, 1964. This application Nov. 14, 1966, Ser. No. 594,260
Claims priority, application Sweden, Feb. 27, 1961, 2,040/61
3 Claims. (Cl. 277—9)

1. In a bell and spigot pipe joint of the class wherein a sealing ring of elastic material is compressed to a deformed state between the opposed substantially cylindrical

surfaces of the bell and spigot by rolling said sealing ring along said surfaces into sealing position as the spigot is thrust into the bell until it is seated therein:

the combination with said bell and spigot of a sealing ring of elastic material of substantially circular cross-section whose inner diameter is less than the outer diameter of said spigot and which is provided with a pointed integral projection whose sides are tangents

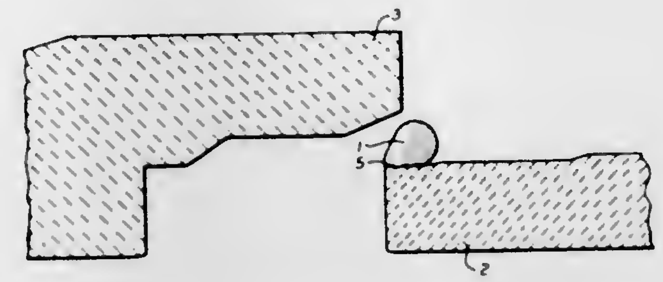

to the circular cross-section of the sealing ring and which extends inwardly from the inner periphery of said sealing ring in the unstressed state;

and wherein said projection points toward the inner end of the spigot so that a side of the projection lies along the outer surface of said spigot after the stressed sealing ring has been rolled into sealing position whereby the spigot is locked in said bell.

3,396,975
BEARING SEAL CASE CONSTRUCTION
Dennis Lee Otto, Canton, Ohio, assignor to The Timken Roller Bearing Company, Canton, Ohio, a corporation of Ohio
Filed Mar. 18, 1966, Ser. No. 535,521
5 Claims. (Cl. 277—26)

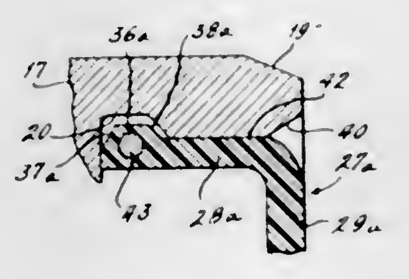

1. In an axle journal anti-friction bearing assembly having a bearing cup with an axially extending lip formed with an inner annular surface spaced from the axle journal and an annular recess in said annular surface; the improvement which comprises a seal device between the inner annular surface of the bearing cup lip and the axle journal, said seal device including a seal assembly, a seal case of moldable plastic material secured to said seal assembly, said seal case locating said seal assembly in engagement with the axle journal and having an annular bead on an axially extending portion engaged with the inner annular surface of the bearing cup lip and said annular bead being seated in the annular recess for retention of said seal case, said axially extending portion of said seal case presenting its plastic material to the asperities of the inner annular surface of the bearing cup lip to effect embedment thereof by cold flow, and a reinforcing member carried by said axially extending portion and received within the axial dimension of the inner annular surface of the bearing cup lip, said reinforcing member being carried in said annular bead and having a coefficient of thermal expansion and contraction substantially the same as the bearing cup lip.

3,396,976
DEVICE, PARTICULARLY HOT-GAS RECIPROCATING ENGINE
Jacobus Pieter Reinhoudt, Cornelis Johannes Alphonsus Theodorus Marks, and Henricus Cornelis Johannes Van Beukering, Emmasingel, Eindhoven, Netherlands, assignors to North American Philips Company, Inc., New York, N.Y., a corporation of Delaware
Filed June 29, 1966, Ser. No. 561,633
Claims priority, application Netherlands, July 13, 1965, 6508994
2 Claims. (Cl. 277—71)

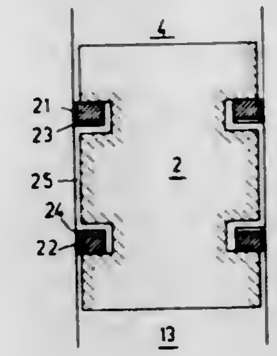

A seal between a piston and cylinder and constituting at least one piston ring located in a groove in either the piston ring or cylinder and having some play therein. There is additional means between one side of the piston ring and the adjacent wall of the groove for preventing a full engagement of that piston ring side against the wall.

3,396,977
GREASE SEALED BEARINGS
Zin Iguchi, Misasagicho, Japan, assignor to Koyo Seiko Company, Ltd., a corporation of Japan
Filed July 19, 1966, Ser. No. 566,419
Claims priority, application Japan, July 20, 1965, 40/59,920
2 Claims. (Cl. 277—94)

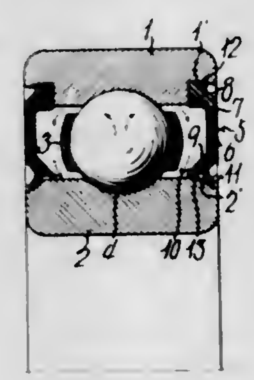

An antifriction bearing assembly including spaced relatively rotatable inner and outer race ring members disposed in concentric relation and held against relative axial movement, said outer ring member having a radially inwardly opening stop groove adjacent one end thereof which is of a substantially square groove providing an annular planiform stop shoulder lying perpendicular to the axis of the ring members spaced from said one end forming a side wall of the groove, said inner ring including a cylindrical outer surface having an annular outwardly concave sealing portion therein, a unitary seal carried by said outer ring member cooperating with said ring members to define one end of a sealed grease chamber between said ring members, said seal comprising an annular outer rubber-like elastic body having an annular rigid ring core forming a relatively rigid reinforcing core embedded therein, said elastic body including a block-like formation along the outer edge thereof tightly seated in said stop groove having an annular planar surface portion abutting said stop shoulder, said elastic body further

including a forked inner edge formation including a radially inwardly projecting lip and a radially inwardly divaricating lip with an inner surface of said seal body, said first lip providing an inwardly straight section pliably in contact with a concave portion of said inner ring member, said second lip extending along an inclined inner flange of said rigid ring forming a crotch with said first lip having a radially inner cylindrical surface disposed in spaced concentric overlying relation to an annular portion of said cylindrical outer surface of said inner ring member and said second lip in slightly spaced relation to said annular surface portion of said inner ring member over the range of fluid pressures encountered in said bearing during use.

3,396,978
SHAFT SEALS
Mark Balkin, Denys G. Turner, and Kenneth Irving, Newcastle-upon-Tyne, England, assignors to George Angus & Company Limited, Newcastle-upon-Tyne, England
Filed June 23, 1965, Ser. No. 466,380
Claims priority, application Great Britain, June 30, 1964, 26,977/64
9 Claims. (Cl. 277—153)

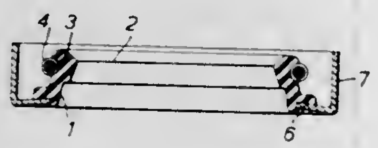

Lip type shaft seals, and free-flowing vulcanizable rubber compositions for preparing same, are made from vulcanizable rubber compositions which contain: from 75 to 90 parts by weight of butadiene-acrylonitrile rubber which contains 25 to 35% by weight of acrylonitrile; from 10 to 25% parts weight of polyvinyl chloride; from 70 to 150 parts by weight of an inert particulate filler of the type conventionally used in vulcanizable rubber compositions, at least 80% by weight of which has a particle size of not less than 100 millimicrons; and conventional amounts of conventional additives such as plasticizers, accelerators, antioxidant, vulcanizers and the like.

3,396,979
SHAFT SEALS
Mark Balkin, Denys G. Turner, and Kenneth Irving, Newcastle-upon-Tyne, England, assignors to George Angus & Company Limited, Newcastle-upon-Tyne, England
Filed June 23, 1965, Ser. No. 466,381
Claims priority, application Great Britain, June 30, 1964, 26,978/64
9 Claims. (Cl. 277—153)

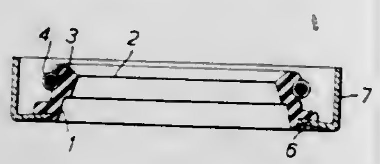

Lip type shaft seals, and free-flowing vulcanizable rubber compositions for preparing same, are made from vulcanizable rubber compositions which contain: from 75 to 90 parts by weight of butadiene-acrylonitrile rubber which contains 25 to 35% by weight of acrylonitrile; from 10 to 25% parts weight of polyvinyl acetate; from 80 to 110 parts by weight of an inert particulate filler of the type conventionally used in vulcanizable rubber compositions, at least 80% by weight of which has a particle size of greater than 100 millimicrons; and conventional amounts of conventional additives such as plasticizers, accelerators, antioxidant, vulcanizers and the like.

3,396,980
CLAMPING DEVICE FOR CLAMPING A TUBULAR MEMBER TO A PILE DRIVING DEVICE
Ludwig Muller, Heinrich-Heine-Strasse 44–46, 355 Marburg an der Lahn, Germany
Filed May 6, 1965, Ser. No. 453,780
Claims priority, application Germany, May 8, 1964, M 60,918
8 Claims. (Cl. 279—2)

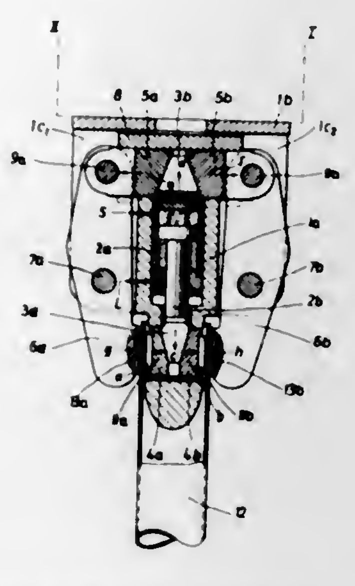

There is shown a clamping device for clamping tubular pile shafts to a pile driving device particularly to a driving device of the vibratory type. The clamping device permits the application of a substantially centered driving force to the shaft to be driven within a wide range of diameters of such shafts. Such substantially centered driving force is obtained by means of inner and outer clamping members movable into and out of clamping engagement with the pile shaft by operation of actuating members simultaneously moving the inner and outer clamping members.

3,396,981
CHUCKING APPARATUS
Earl J. Hammond, Frankenmuth, Mich., assignor, by mesne assignments, to Houdaille Industries, Inc., Buffalo, N.Y., a corporation of Michigan
Filed Jan. 18, 1965, Ser. No. 426,177
26 Claims. (Cl. 279—89)

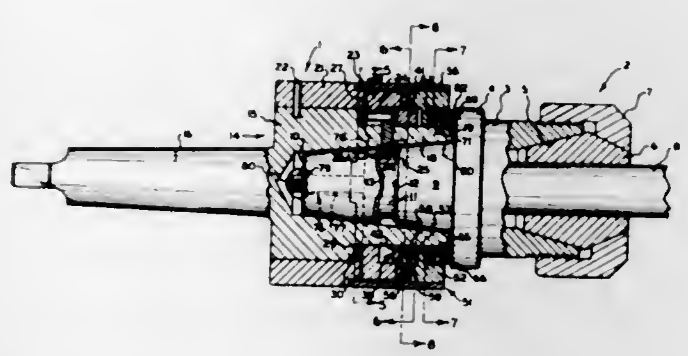

A chuck device for enabling rapid changing of tool holders and having a latch movable into and out of a groove in the tool holder in response to rotation of a rotary, latch operating member, the latch being movable from its nonlatching position to its latching position by engagement of the tool holder with an unlocking part mounted in the path of movement of the tool holder into the chuck and having an axially movable ejector operable to eject the tool holder from the chuck in response to movement of the rotary operator in a direction to move the latch from its latching position to its unlatching position.

3,396,982
CHUCK
Merritt B. Sampson, Shaker Heights, Ohio, assignor to The S-P Manufacturing Corporation
Filed Oct. 4, 1965, Ser. No. 492,717
10 Claims. (Cl. 279—120)

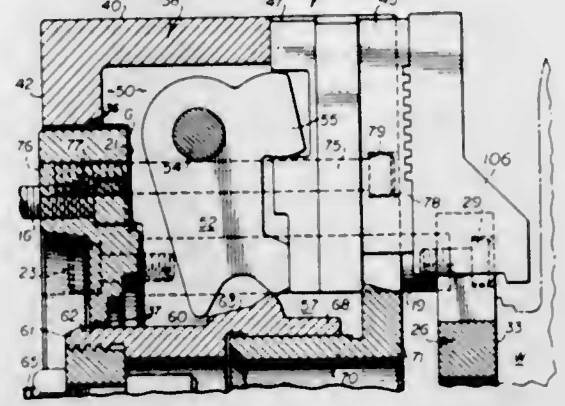

1. In a rotatable jaw chuck, a chuck mounting plate adapted to be mounted on a machine tool spindle for rotation about a central axis perpendicular to the plane of the plate; a chuck body having a plurality of radially movable jaws; a plurality of posts extending axially from the mounting plate through at least a portion of the chuck body to support, rotate and guide the chuck body, said chuck body having passageways for receiving the posts and constructed and arranged to slide axially along the posts; adjustable stop means supported by the mounting plate and independent of said posts for coacting with the chuck body to limit the extent of sliding movement of the chuck body along the posts, said stop means being positionable to clamp the chuck body firmly against the mounting plate to prevent the body from sliding along the posts; resilient means acting between the mounting plate and the chuck body to resiliently bias the chuck body in a direction away from the mounting plate; means carried by the chuck body for varying the force with which the resilient means biases the chuck body in the said direction; and a locating surface disposed parallel to the mounting plate, supported by said posts in fixed relationship with the mounting plate and axially spaced from the mounting plate at a location beyond the chuck body; whereby the chuck body is selectively slidable between the mounting plate and the locating surface or secured against the mounting plate.

3,396,983
TRACTOR APPARATUS
Lloyd H. Massey and Harold Slavings, both of Rte. 1, Hayti, Mo. 63851
Filed Nov. 10, 1966, Ser. No. 593,505
5 Claims. (Cl. 280—5)

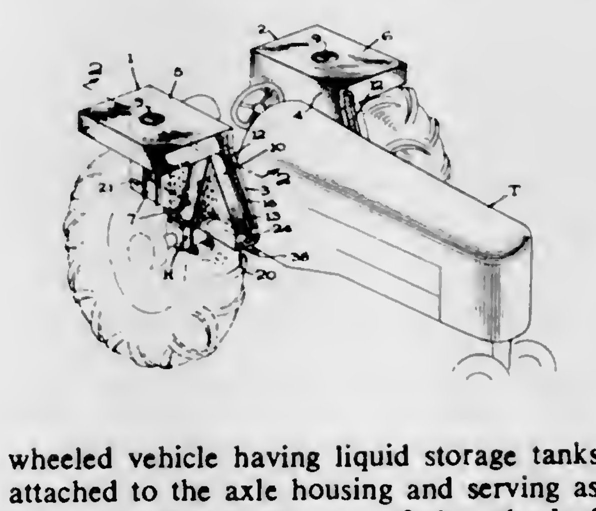

A wheeled vehicle having liquid storage tanks removably attached to the axle housing and serving as fenders shielding one side and the top of the wheels from the vehicle operator. Mounting means for the removable attachment of the tanks includes reversible or selectively positionable members permitting mounting of the tanks upon axle housings of various configurations.

3,396,984
ANTI-ROLL DEVICES FOR AUTOMATIC VEHICLES
Jean Cadiou, Paris, France, assignor to Societe Anonyme Andre Citroen, Paris, France, a French corporation
Filed July 20, 1966, Ser. No. 566,499
Claims priority, application France, Aug. 3, 1965, 27,080; Jan. 24, 1966, 46,956
6 Claims. (Cl. 280—6)

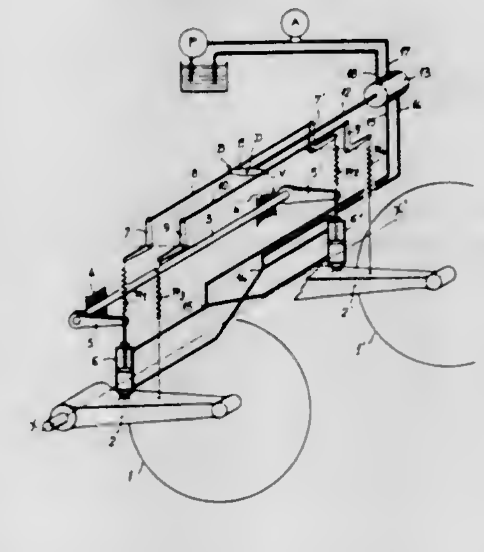

An anti-roll device for an automotive vehicle for inclining the body of the vehicle inwardly of a turn having at least one anti-roll bar connected to the wheel carrier arms through means responsive to a distributor. Two rods are supported by the vehicle body and a rudder bar connected to the distributor is mounted on the rods. Resilient means connect the ends of one of the rods to the wheel carrier arms and resilient means connect the ends of the other rod to the anti-roll bar. The rudder when actuated by the rods operates the distributor to control the delivery of fluid under pressure to the means responsive to the distributor to the extent necessary and sufficient to impart to the vehicle body an inclination proportional to the angle of the torsional deflection impressed on the anti-roll bar and such inclination is directed inwardly of the turn. Time-lag means are associated with the distributor responsive to movements of steering mechanism.

3,396,985
ROLLER SKATE
Daniel D. Kipnis, 1335 W. Randolph St., Chicago, Ill. 60607
Filed Dec. 27, 1966, Ser. No. 604,762
2 Claims. (Cl. 280—11.26)

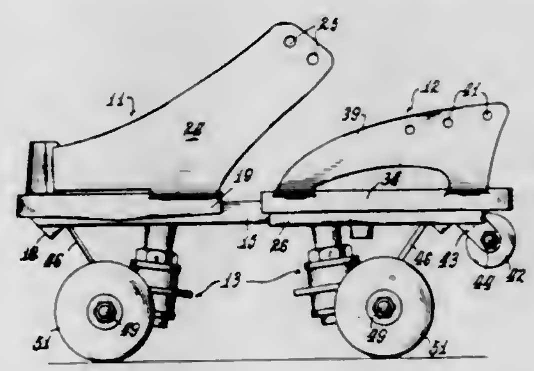

A roller skate having molded foot pads with integral straps, adjustable wheel mountings and a resilient frictional toe stop.

3,396,986
SKI BINDING HAVING FRANGIBLE HEEL ENGAGING MEMBER
Richard L. Miller, Medical Arts Bldg., 330 South St., Waterloo, Iowa 50701
Filed Oct. 22, 1965, Ser. No. 500,905
7 Claims. (Cl. 280—11.35)

The ski binding of the present invention includes a novel connector means which is connected with a heel strap that extends about the heel of the ski boot, and there is a frangible connection between the connector and the heel strap that will break and actually separate when subjected to a predetermined force so as to release the heel of an associated ski boot. The fracturable part may be either on the strap or the connector means, and the connector means may be in the form of a resilient coil spring that is attached to the heel strap at either end thereof, and the fracturable means may be headed buttons on the heel strap and which engage in a slot means in the resilient connector means, and there may be one or more of these headed buttons or other such means that will allow for an adjustment of the heel strap with respect to the connector means, and thus provide for the ski binding being adaptable to be used in connection with different sizes and shapes of ski boots.

3,396,987
SAFETY HEAD FOR SKI BINDING
Werner Zimmermann, Eulerstrasse 30, Basel, Switzerland
Filed Aug. 4, 1966, Ser. No. 570,343
Claims priority, application Switzerland, Aug. 7, 1965, 11,165/65
11 Claims. (Cl. 280—11.35)

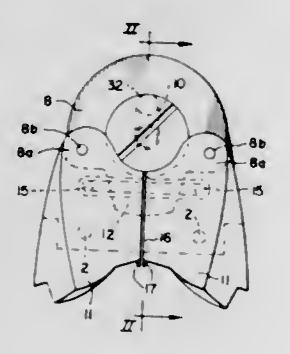

A safety head for a ski binding wherein a baseplate is fixed on the ski having a pivot pin. A pivoting member is pivotally mounted on the pin and at each flank of the pivoting member a lug iron is independently mounted to pivot about a vertical axis. A separate securing means cooperates with the front edge of the boot sole maintaining each of the lug irons in normal position. The lug irons are slidable in opposite directions and substantially parallel to the longitudinal axis of the ski under a force from the ski boot so that at least one of said lug irons can swivel laterally about its axis to disengage the boot. The ski boot sole has a notch and each of the lug irons has a tip cooperating with such notch. The lug irons are held together by an elastic member.

3,396,988
CHAIN AND SPROCKET ASSEMBLY
Charles A. Kroening, R.R. 1, Box 143, Fountaintown, Ind. 46130
Filed Dec. 8, 1966, Ser. No. 600,127
7 Claims. (Cl. 280—96)

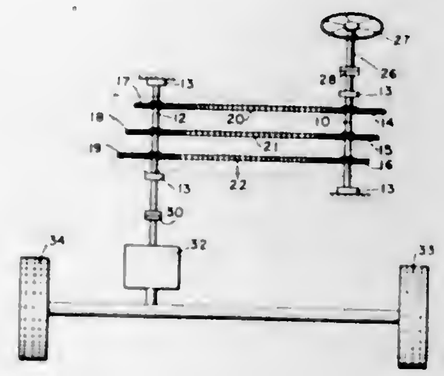

A chain and sprocket assembly for reducing the play in a driver shaft in which said driver shaft and its driven shaft carry pluralities of pairs of aligned sprockets interconnected by a plurality of chains. Two pairs of said sprockets are eccentrically mounted on their respective shafts, with one of said two pairs being offset in one direction from the shaft axes and the other of said two pairs being offset in an opposite direction from the shaft axes.

3,396,989
WELD-FABRICATED STRUCTURAL MEMBER
Joachim Kolbe, 5126 Haskell Ave., Encino, Calif. 91316
Filed Dec. 13, 1965, Ser. No. 513,323
9 Claims. (Cl. 280—106)

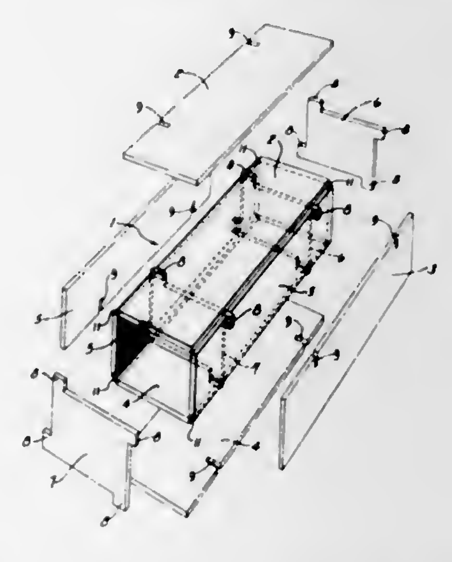

A strut or other hollow structure member is constructed without the necessity of jigs and fixtures from plate stock cut to provide top, bottom and side enclosure plates welded together at the longitudinal corners. At least two of the plates extend for the full length of the strut and spacer plates are disposed transversely of the strut at a plurality of locations therealong with each spacer plate provided with a tongue or projection extending through a corresponding slot in each plate and welded in place. The subassembly of the enclosure plates and the spacer plates prior to welding is rigid and self supporting and may be secured temporarily by one or more peripheral bands applied thereto.

3,396,990
CHILD'S VEHICLE PROPELLED BY JUMPING MOTION
Thomas Hayes, New York, N.Y., assignor to Kenneth S. Goldfarb, New York, N.Y.
Filed Oct. 17, 1966, Ser. No. 587,156
6 Claims. (Cl. 280—221)

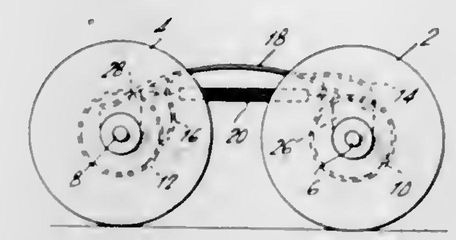

1. A wheeled vehicle comprising front wheel means, rear wheel means, axle means, said wheel means being mounted on said axle means, sprocket means mounted on said axle means for rotating at least one of said wheel means, a flexible platform, biasing means urging said platform into an initial position, and means journalling said axle means to said platform, pawl means depending from said platform for engagement with said sprocket means upon depression of said platform to rotate said sprocket means and said one axle means.

3,396,991
TRUCK HOOK FOR BITUMINOUS PAVING MACHINES
Vernon L. Schrimper and Loren E. Hermann, Cedar Rapids, Iowa, assignors to Iowa Manufacturing Company, Cedar Rapids, Iowa, a corporation of Iowa
Filed June 30, 1966, Ser. No. 561,914
5 Claims. (Cl. 280—479)

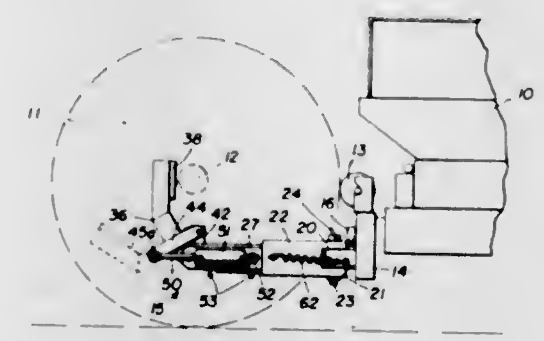

A hook assembly for engaging the rear axle of a truck while it is unloading bituminous material into the forward hopper of a bituminous paver. A hydraulically operated toggle linkage moves a hook member about a horizontal axis in order to engage and disengage the truck axle, the hook member in the former position holding the truck against the truck push rollers of the paver. The hook assembly is swingable as a unit about a vertical axis at the front of the paver and incorporates a shock absorbing mechanism.

3,396,992
CONNECTOR FOR HOT FLUID CONDUITS
Jesse R. W. Hale, Gardena, Calif., assignor to General Connectors Corporation, Burbank, Calif., a corporation of California
Filed Dec. 15, 1966, Ser. No. 602,087
2 Claims. (Cl. 285—100)

An articulated heat resisting connector particularly intended for gas conduits employed in aircraft, and including a pair of hollow spherical journals fitted between internal and external sleeves, and redundant internal and

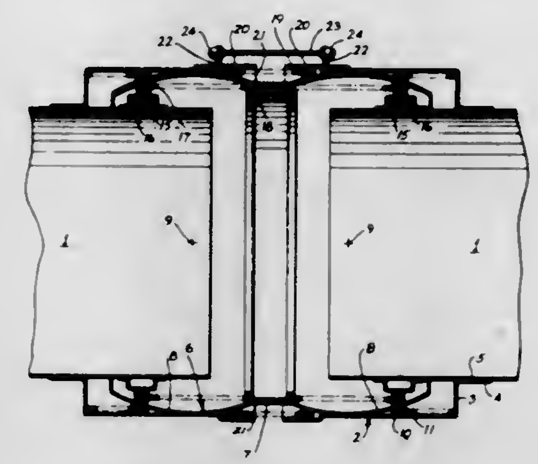

external seals between each journal and the corresponding sleeves. A spring tends to separate one set of seals.

3,396,993
QUICK COUPLING DEVICE FOR HOSES
Karl Weinhold, Kreitzweg 8, Holzheim, near Neuss, Rhineland, Germany
Filed Sept. 6, 1966, Ser. No. 577,501
14 Claims. (Cl. 285—114)

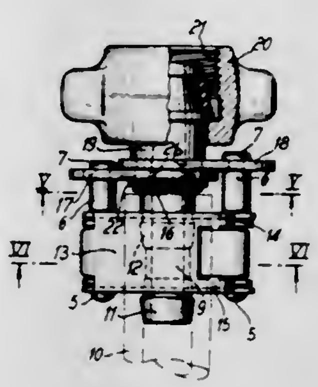

A hose coupling having a tubular member for insertion into the end of a rubber-like hose and half-sleeves on the tubular member to engage about the hose and press it into sealing and mechanically fixed relation with the tubular member. Pins extending axially along opposite sides of the tubular member pivotally support the half-sleeves and also support a clamping mechanism therefor and discs mounted on the tubular member support the pins.

3,396,994
HOSE COUPLING FOR REINFORCED FLEXIBLE HOSE
Tsunehiko Ito, 304 Hon-machi, and Shingi Nagaoka, 1125 Asahi-machi, both of Nabari-shi, Mie Prefecture, Japan, and Yoshiya Ochiai, 23 1-chome, Higashi, Showa-cho, Abeno-ku, Osaka-shi, Osaka Prefecture, Japan
Filed Oct. 28, 1966, Ser. No. 590,425
Claims priority, application Japan, Nov. 13, 1965, 40/69,887; Aug. 17, 1966, 41/77,758
2 Claims. (Cl. 285—248)

A hose coupling for a flexible hose. The coupling has an outer annular cylinder the surface of the bore thereof having a spiral groove therein, and the cylinder having an opening through the wall thereof leading into the groove, through which a wire can be led. The coupling also has an inner annular cylinder member having a tubular stem with an uneven surface thereof. The tubular stem is inserted into the stripped end of the flexible hose, and the outer annular cylinder is then moved onto the stripped

end while rotating it so as to entrain the wire between the outer annular member and the surface of the stripped portion of the hose. Coupling means between the outer

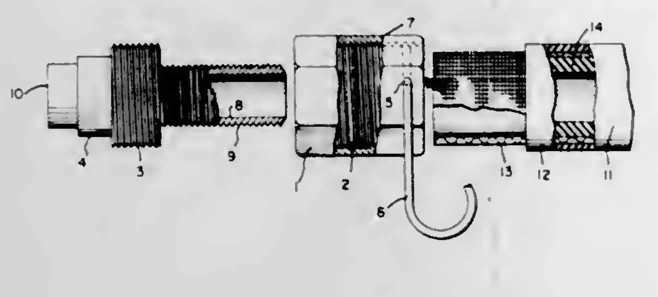

annular cylinder and inner annular cylinder are provided which couple the two parts to each other when the coupling is fully assembled.

3,396,995
BALL-COCK SHANK
Ralph Burnside, P.O. Box 633, Duluth, Ga. 30136
Filed May 14, 1964, Ser. No. 367,354
4 Claims. (Cl. 285—330)

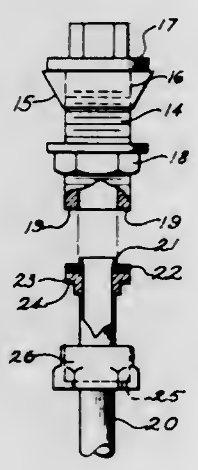

1. In a ball-cock valve assembly of the type utilized in a toilet tank, the combination of a water supply pipe for connection at one of its ends to a source of water pressure, said water supply pipe including an exterior annular flange extending thereabout, said flange being displaced from the other end of said pipe, a hollow cylindrically shaped externally threaded shank having an inside diameter at least as large as the outside diameter of said water supply pipe, one of the ends of said shank forming an annular surface disposed perpendicular to the longitudinal axis thereof and defining a plurality of concentric grooves therein, a deformable washer disposed around said water supply pipe between its said other end and its said exterior annular flange, a jam nut including an internally threaded portion and an inwardly stepped portion, said inwardly stepped portion engaging the exterior annular flange of said water supply pipe and said internally threaded portion engaging the external threads of said shank, whereby said one of the ends of said shank and said other end of said water supply pipe are urged toward each other and the grooves of said shank partially deform said deformable washer.

3,396,996
SELF-SEALING BOLT ASSEMBLY
George M. Raptis, Pacific Palisades, Calif., assignor to Leona H. Dounis, Pacific Palisades, Calif.
Filed Jan. 12, 1967, Ser. No. 608,835
2 Claims. (Cl. 287—189.36)

An improved self-sealing fastener assembly is provided, in which a bolt is drawn into aligned holes in adjacent plates into a self-sealing fastening engagement therewith, this being achieved by providing a stepped diameter on

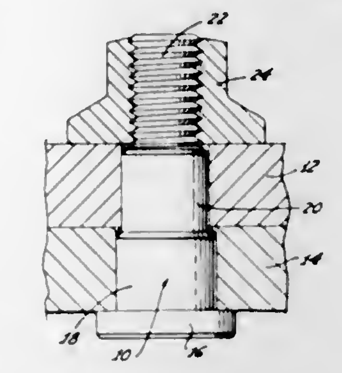

the shank of the bolt, and without the need for tapered holes or a tapered bolt.

3,396,997
FIRE-RATED CEILING GRID SYSTEM
George C. Adams, Ann Arbor, Mich., assignor to Rollform Incorporated, Ann Arbor, Mich., a corporation of Michigan
Filed Mar. 24, 1966, Ser. No. 537,055
14 Claims. (Cl. 287—189.36)

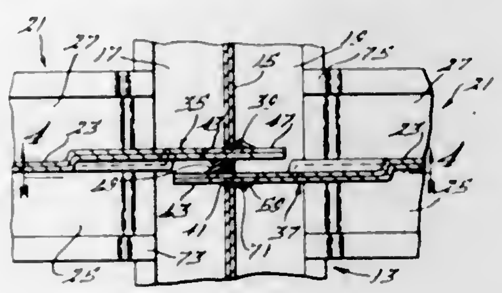

This invention comprises a ceiling grid system in which the cross T-members are formed with end tabs which extend through slots in the main T-members and wherein the members normally are locked together by fingers struck and bent laterally from the tabs at opposite sides of the main T-members. The fingers extend laterally and rearwardly from the tabs so that the fingers on the far sides of the main T-members butt endwise against the main T-members to positively prevent the tabs from pulling back out of the slots. The fingers on the near sides of the main T-members are effective under normal conditions to prevent the tabs from pushing farther into the slot but under thermal expansion conditions the near fingers flex inwardly permitting the tabs to penetrate farther into the slots so as to prevent buckling of the members and to maintain the integrity of the ceiling in case of fire.

3,396,998
FISHHOOK HOLDER
Wright A. Scoville, 20 S. Barneburg Road, Medford, Oreg. 97501
Filed Mar. 29, 1967, Ser. No. 626,846
5 Claims. (Cl. 289—17)

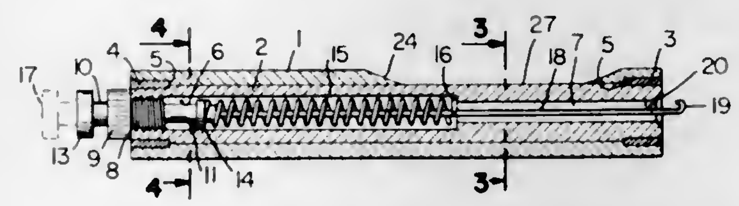

A holder for holding and rotating a fishhook in the operation of securing a snell leader to the eye of the hook by a twisted or similar knot.

3,396,999
SAFETY LOCK FOR AUTOMOTIVE VEHICLES
William F. Knapp, 2358 Barksdale Blvd., Bossier City, La. 71010
Filed Mar. 15, 1966, Ser. No. 534,367
3 Claims. (Cl. 292—39)

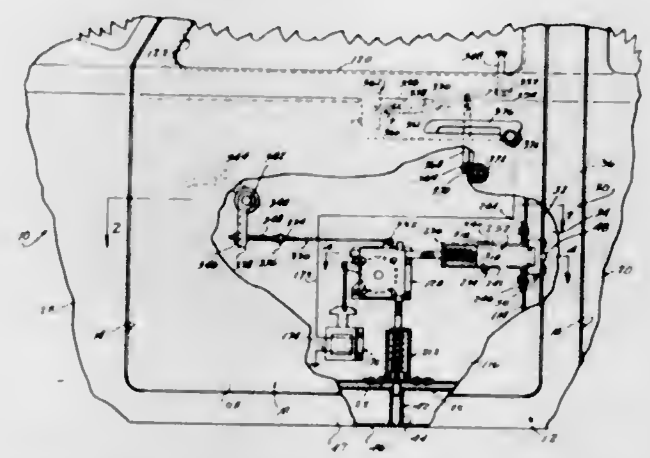

A lock for motor vehicle doors comprising a side bolt and a bottom bolt; a rack connected to each bolt by a lost motion connection; each bolt having resilient means biasing it toward locking position; a gear meshing with both racks; a manually operable handle remotely connected to said gear, for rotating said gear to withdraw said bolts from locking position; solenoid means connected to said gear for rotating said gear to withdraw said bolts, a manually operable switch remote from said handle for energizing said solenoid and lost motion means in the remote connection of said handle whereby said handle and said switch may be operated independently of each other.

3,397,000
ONE-TOUCH PLUG-IN LOCK
Yoshitaka Nakanishi, 644 1-chome, Yawata-machi, Chiba-ken, Ichikawa-shi, Japan
Filed Dec. 27, 1965, Ser. No. 516,625
Claims priority, application Japan, Dec. 27, 1964, 39/73,387
3 Claims. (Cl. 292—61)

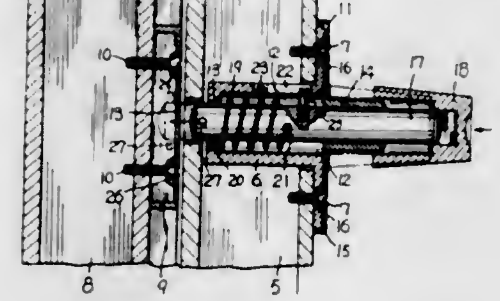

Lock having a lock bolt operated manually axially to a projected position against the force of a spring biasing the bolt continuously to a retracted position and to a rotated condition in which it is releasably held in a locked condition by the spring and projections on the bolt which are misaligned with a slot after projection therethrough and the rotation of the bolt. The bolt is rotated manually in a direction opposite to the rotation imparted by the spring for aligning the projections with the slot after which the spring returns the bolt to a retracted position opening the lock.

The lock is provided with a sleeve in which the bolt moves axially and a cam and groove programmed to carry out the rotation control for the spring and the extent that the bolt can be rotated in the direction opposite to rotation by the spring.

3,397,001
CLOSURE LATCH ASSEMBLY
Nathan R. Friedman, 12327 High Meadow, Dallas, Tex. 75234
Continuation-in-part of application Ser. No. 369,076, May 21, 1964. This application Sept. 28, 1966, Ser. No. 587,940
1 Claim. (Cl. 292—87)

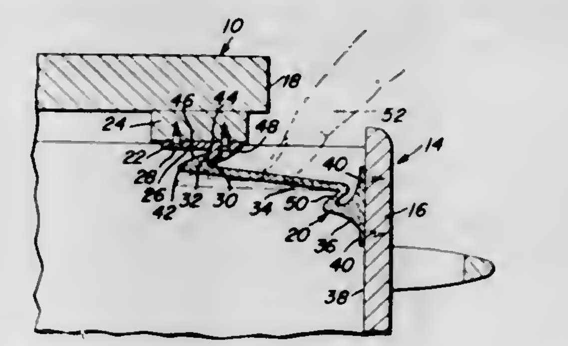

1. A latch assembly for use with a receptacle member having an access opening, a closure member, and means for supporting the closure member for movement along a predetermined path toward and away from said receptacle on the exterior thereof, said latch assembly releasable preventing more than minimum movement of said closure member from a closed position toward a fully opened position, said latch assembly comprising:

(a) a stop member and a latch member

(b) said stop member being a unitary structure comprising:

  (1) a flat base portion,

  (2) an abutment portion depending from said base portion,

  (3) said abutment portion having a first and second face, each being similarly inclined at different acute angles with respect to said base portion,

  (4) the planes of said first and second faces intersecting the plane of said base portion along parallel lines,

(c) said latch member being a unitary structure including:

  (1) a flat base portion and a latching lug connected by an elongated arm of resistant material,

  (2) said arm being inclined with respect to said base,

  (3) said latching lug having first and second faces inclined toward said base.

(d) the angles of inclination being such that when the base of said stop member is connected to the receptacle and the base of the latch member is connected to the closure member with the base of the stop member normal to the base of the latching member and the first face of said stop abutment portion facing into said enclosure and the arm of said latch member extending toward said receptacle and registered for engagement of the latching lug with said abutment portion as said closure member is moved into closing relationship with said receptacle member, the first face of said abutment portion is substantially parallel to the first face of the latching lug and the second face of said abutment portion is similarly inclined as the second face of said latching lug,

(e) said first face of said latching lug being registered for engagement with the first face of said abutment portion when the closure member is moved from the closed position a partially open position, and

(f) the second face of the latching lug being engageable with the second face of the abutment portion upon movement of the closure member toward the closed position from its fully open position for cam-

ming the latching lug to a position in which it passes said stop means.

3,397,002
TWO-WAY AUXILIARY BOLT
Fred J. Russell, 8635 Otis St., South Gate, Calif. 90280, and Roger J. Nolin, 1838 Whitehurst Drive, Monterey Park, Calif. 91754
Continuation of application Ser. No. 450,460, Apr. 23, 1965. This application May 12, 1967, Ser. No. 638,158
3 Claims. (Cl. 292—192)

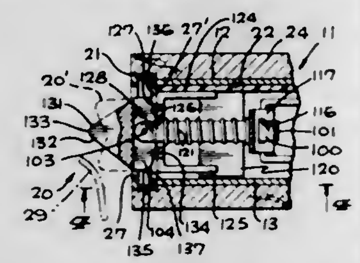

The invention resides in a door lock which is provided with a latch bolt and an auxiliary bolt. The latch bolt is for the conventional purpose of holding a door closed, and the auxiliary bolt is for the purpose of blocking the latch bolt against release from closed position when the door is closed. The blocking is accomplished by tilting the auxiliary bolt so that its shank is shifted endwise whereby to throw a pivotally mounted blocker into blocking position behind the latch bolt. A particular form of structure present in the disclosed device resides in the provision of an auxiliary bolt having opposite faces which are the same and which is pivoted so that it can be depressed when the door is swung in either direction. The connection between the auxiliary bolt and its shank is such that the shank will be depressed whereby to manipulate the pivotally mounted blocker no matter which way the auxiliary bolt shifts when it strikes an appropriate strike plate.

3,397,003
CONTAINER CLOSURE AND CARRYING DEVICE
Rixey B. Wherry, 718 South Texas Bldg., San Antonio, Tex. 78205
Continuation-in-part of abandoned application Ser. No. 471,560, July 13, 1965. This application Jan. 11, 1966, Ser. No. 526,939
8 Claims. (Cl. 294—87.2)

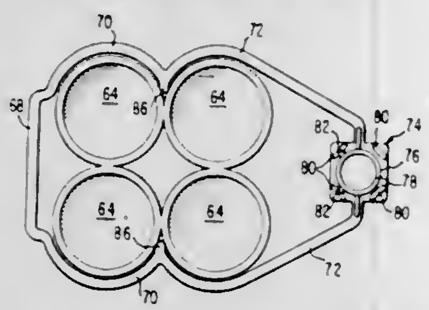

A container closure and carrying device is provided in which a series of container closures are releasably connected together so that when a group of the closures are used to form the tops of a group of containers, a unitary package is formed. A bottom support member is connected to the container closures to lend support to the unitary package, and carrying means are connected to the closure members to permit the unitary package to be easily carried.

3,397,004
CAB-OVER TELESCOPIC CAMPER
Earl R. Garrison, 1445 Bellevue, Ave., Burlingame, Calif. 94010
Filed Oct. 10, 1966, Ser. No. 585,646
6 Claims. (Cl. 296—23)

A cab-over telescopic camper having an upper room section telescopically arranged on a lower room section for raising and lowering movements. The lower section has a cab-over compartment projecting forwardly therefrom, while the upper section has a cab-over cover fixed thereto to overlie the cab-over compartment of the lower section.

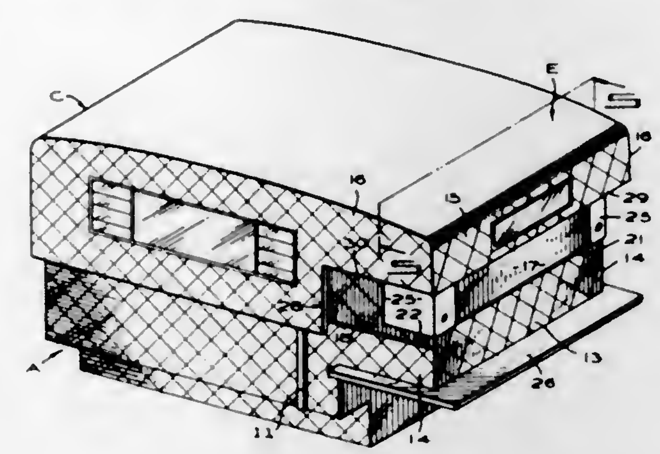

When the upper section is raised, swingable panels are automatically raised so as to bridge the space between the cab-over compartment and cover, and these panels are automatically moved into the confines of the camper when the upper section is lowered.

3,397,005
AUTOMOBILE WITH ROBBERY PREVENTING PARTITION
Vivian G. May, Augusta, and Saburo Hori, Kalamazoo, Mich., assignors to Checker Motors Corporation, Kalamazoo, Mich.
Filed Mar. 18, 1966, Ser. No. 535,554
16 Claims. (Cl. 296—24)

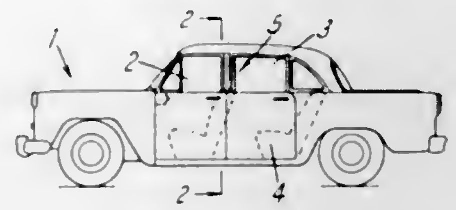

An assembly of inflexible bullet resistant panels located between the front and rear seats of an automobile and bridging the space between the floor, roof and door posts and including a transparent panel reciprocable in opening and closing relation to an opening in the assembly and having remote control operation means.

3,397,006
CAMPER TRUCK EXTENSION STRUCTURE
Donald R. Grant, 3400 Highway 61, St. Paul, Minn. 55110
Filed Apr. 28, 1966, Ser. No. 546,014
4 Claims. (Cl. 296—26)

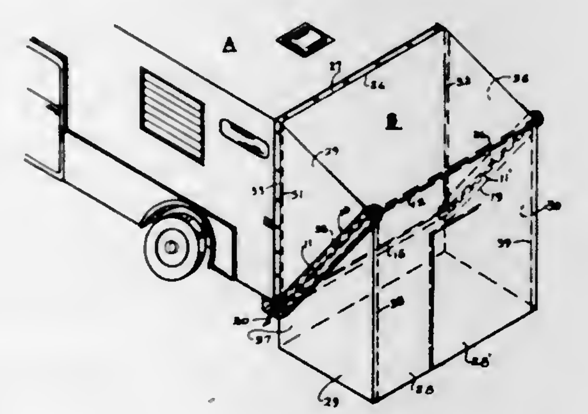

The present disclosure embodies a camper truck extension which is portable therewith as a part thereof, or attachment to the truck body which extends the available camping area of the truck body for living or storage quarters.

3,397,007
SPRING ACTUATED PERMANENT TOP FOR CAMPING TRAILER
Richard W. Scheid, Hamilton, Ohio, assignor to Ward Manufacturing, Inc., Cincinnati, Ohio, a corporation of Ohio
Filed Mar. 25, 1966, Ser. No. 537,504
5 Claims. (Cl. 296—27)

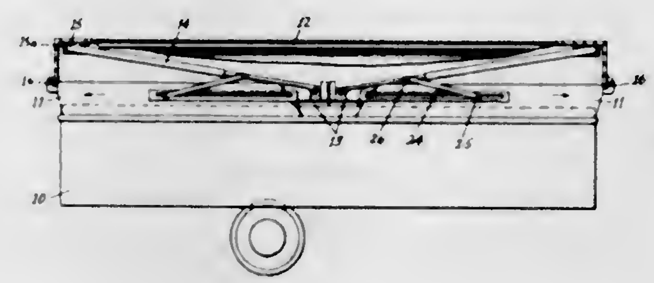

A camping trailer having a body supporting a pair of beds movable horizontally between retracted and extended positions and including a cover supported by spring biased support legs mounted on the beds to facilitate for conveniently moving the cover between collapsed and raised positions in response to movement of the beds between the retracted and extended positions.

3,397,008
TRACTOR CAB
Maurice Gaston G. Timmerman, 24 Boite Portale, Bergues, France
Filed Feb. 7, 1966, Ser. No. 525,544
Claims priority, application France, Feb. 8, 1965, 4,714
9 Claims. (Cl. 296—28)

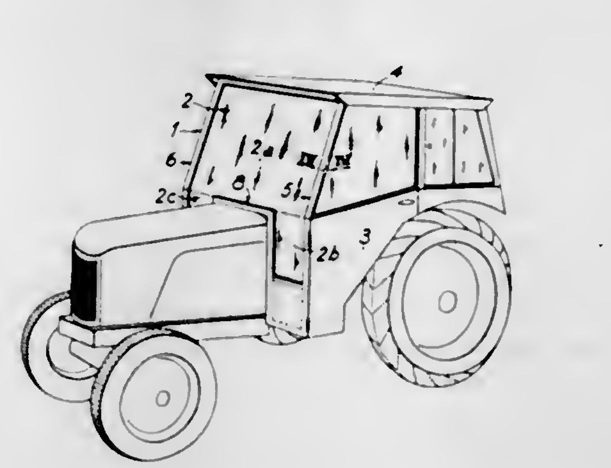

A cab for a tractor having a hood comprises a rigid front frame consisting of two lateral posts spaced laterally from the hood, an upper cross member rigidly interconnecting the upper ends of the posts and a lower cross member of inverted U-shape consisting of a central horizontal portion extending across the top of the hood, two side portions extending down along opposite sides of the hood and connecting portions extending between and rigidly connecting the lower portions only of said side portions and the posts. Transparent sheet material mounted in the clear area provided by the frame extends between the lateral posts and below the hood at opposite sides of the frame. Doors hinged on these lateral posts open either laterally or forwardly. The cab roof comprises sheet material folded in under flange portions of the upper cross member of the front frame and a similar rear cross member.

3,397,009
TARP ROLLER
Hilbert H. Landenberger, Rte. 1, Underwood, N. Dak. 58576
Filed Sept. 29, 1966, Ser. No. 583,040
2 Claims. (Cl. 296—100)

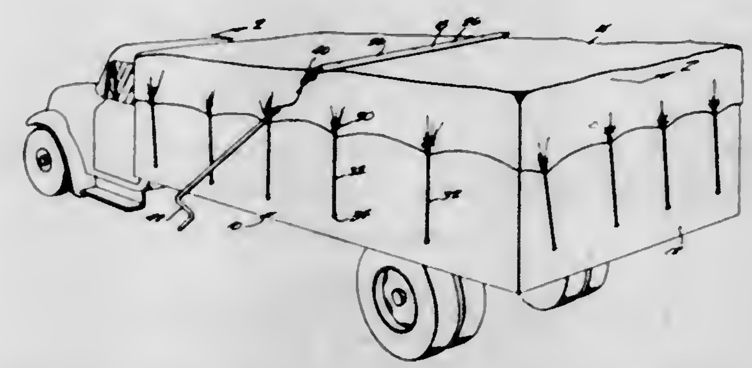

A tarp roller apparatus in which there is a roller attached to the tarp at the middle and which will travel with the tarp as the same is rolled for completely enrolling the tarp and when completely rolled the entire top of the truck or wagon box is clear of the tarpaulin.

3,397,010
COLLAPSIBLE CHAIR DEVICE
John Leimgruber, 801 N. Temple Blvd., Temple, Pa. 19560
Filed Oct. 19, 1966, Ser. No. 587,760
8 Claims. (Cl. 297—174)

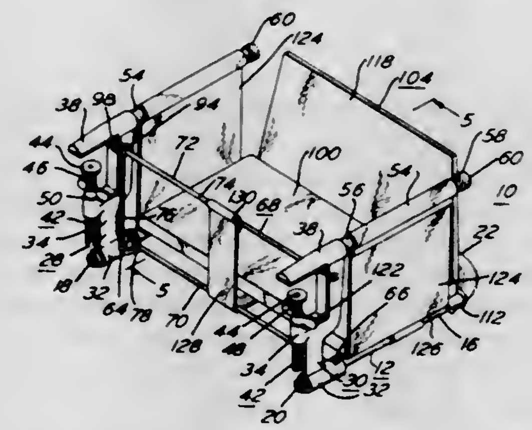

A collapsible chair device comprising a base frame for supporting a seat having a pair of legs, and a pair of clamp elements for releasably attaching with a supporting body each respectively pivotally received over a respective one of the legs of the base frame. A front support frame is provided including a bottom rod with first and second ends each of which extends through a respective clamp element and the leg of the base frame for fixing the position of its corresponding clamp element along its leg. The clamp elements and support frame are pivotal for allowing the chair device to assume a collapsed position, and may be moved to their upright positions for being secured and interlocked for use as a chair device.

3,397,011
SEATING STRUCTURE
Richard L. Sklaar, 1550 Schuyler, Beverly Hills, Calif. 90210
Filed Oct. 27, 1966, Ser. No. 589,914
1 Claim. (Cl. 297—219)

Disclosed is a cover for bench type seating configura-

tions which includes an extruded plastic member which fits over the top, sides and tucks into the bottom of the

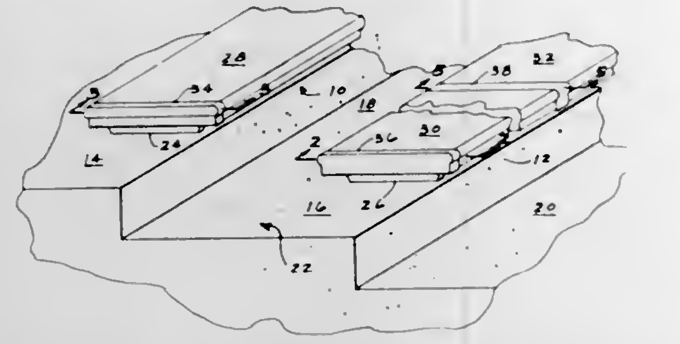

bench seating. End caps and covers adapted for attachment to the extruded cover are also disclosed.

3,397,012
CUTTER BITS AND MEANS FOR MOUNTING THEM
Claude B. Krekeler, Hamilton County, Ohio, assignor to The Cincinnati Mine Machinery Co., Cincinnati, Ohio, a corporation of Ohio
Continuation-in-part of application Ser. No. 537,158, Mar. 24, 1966. This application Dec. 19, 1966, Ser. No. 611,513
57 Claims. (Cl. 299—86)

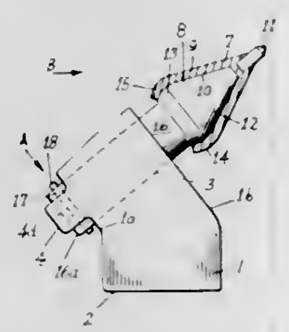

A cutting tool and mounting means for use on a mining machine and the like. The cutting tool comprises an elongated shank with circular cross section, a cutting means at one end of the shank and a gauge-determining abutment means at the other end of the shank. The mounting means comprises a body having a shank receiving perforation, the perforation having a forward end a rearward end and being of a diameter such that the shank of the cutting tool is freely rotatable therein. An abutment surface is provided in association with the rearward end of the shank receiving perforation, the abutment surface on the mounting means being adapted to cooperate with the abutment surface on the cutting tool.

3,397,013
CUTTER BITS AND MEANS FOR MOUNTING THEM
Claude B. Krekeler, Hamilton County, Ohio, assignor to The Cincinnati Mine Machinery Co., Cincinnati, Ohio, a corporation of Ohio
Continuation-in-part of application Ser. No. 611,513, Dec. 19, 1966. This application Aug. 4, 1967, Ser. No. 658,539
19 Claims. (Cl. 299—86)

Cutting means and mounting means therefor for mining machines and the like, wherein the cutting means is of the type having a shank with circular cross section, a hard cutting tip at one end and an abutment surface at the other end. The mounting means comprises a body portion with a shank receiving perforation therein, the perforation being of a diameter such that the shank is freely rotatable therein, and the perforation has a forward end and a rearward end with an abutment surface in association with the rearward end. The abutment surface lies in a plane non-parallel with the axis of the shank receiving perforation, and is adapted to cooperate with the abutment sur-

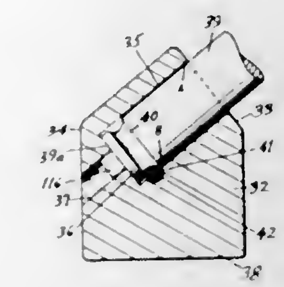

face on the shank of the cutting means, there being a male and female engagement between the abutment surfaces.

3,397,014
SAFETY WHEEL FOR AUTOMOTIVE AND SIMILAR VEHICLES
Gus T. Nigrelli, 8871 19th Ave., Brooklyn, N.Y. 11214
Filed May 3, 1966, Ser. No. 547,302
15 Claims. (Cl. 301—39)

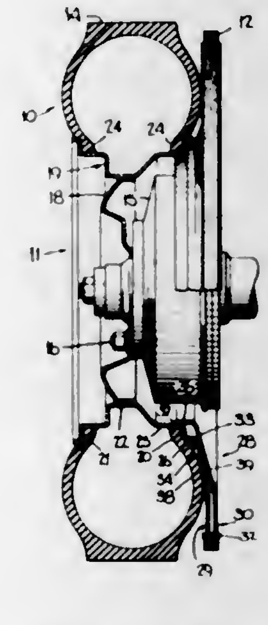

An auxiliary or safety wheel which is associated with a main wheel having a pneumatic tire. Upon failure of the main tire, the tire of the auxiliary wheel takes over the load whereby the need for an emergency tire change is avoided. The auxiliary wheel is permanently secured to the main wheel, and in one embodiment is, in part, integrally formed with the main wheel. The tire of the auxiliary wheel is solid and, in one group of embodiments, is replaceable.

3,397,015
STUD FEEDING MECHANISM
William G. Brosene, Jr., Wyoming, Ohio, assignor, by mesne assignments, to Studebaker Corporation, a corporation of Michigan
Original application Oct. 22, 1965, Ser. No. 500,899, now Patent No. 3,367,015. Divided and this application June 23, 1967, Ser. No. 663,906
8 Claims. (Cl. 302—2)

A mechanism for feeding studs having a shank portion and a head portion at one end from a hopper wherein the studs are disposed in random fashion in a predetermined end-to-end fashion. The hopper bottom is sloped and has an elongated slot to receive the shank portion of each stud. An agitator is provided for aligning studs in the

elongated slot. Such agitator may comprise a reciprocating piston. The studs pass from the elongated slot into a

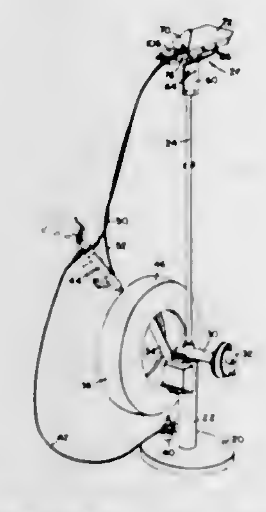

guide and are ejected from the guide by a stream of pressurized gas.

3,397,016
BEARING UNITS
Cedric George Delforce, Clevedon, Somerset, and Gerald Lowe Donnellan, Yatton, near Bristol, Somerset, England, assignors, by mesne assignments, to Lear Siegler, Inc., Santa Monica, Calif., a corporation of Delaware
Filed Apr. 5, 1966, Ser. No. 540,345
Claims priority, application Great Britain, Apr. 8, 1965, 15,040/65
3 Claims. (Cl. 308—3)

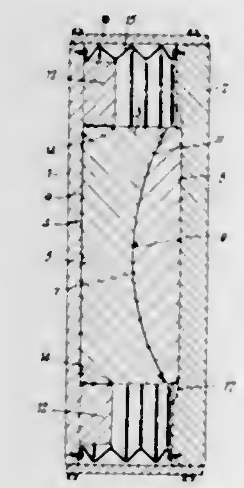

A structural bearing unit including a first plate having a flat bearing surface, a second plate, a pad having a flat bearing surface in sliding contact with the flat bearing surface on the first plate member, a block extending from the second plate, the pad and the block having coacting spherical bearing surfaces, lugs disposed on opposite sides of the pad and extending from the first plate and presenting oppositely disposed parallel planar surfaces coacting with oppositely disposed parallel planar surfaces on the pad to limit relative sliding movement between the first plate and the pad to sliding movement in a plane which is transverse to the first plate.

3,397,017
NON-ROTATING DRILL PIPE PROTECTOR
John C. Grant, Huntington Park, and Raymond G. Taylor, Jr., Santa Monica, Calif., assignors to Byron Jackson, Inc., Long Beach, Calif., a corporation of Delaware
Filed Feb. 21, 1966, Ser. No. 529,073
3 Claims. (Cl. 308—4)

A tubular protector of elastomeric material for a well drilling string or pipe, the protector being formed of reinforced arcuate flanged section segments with fasteners in the flanges providing means for assembling the tubular protector about the pipe. To limit longitudinal movement

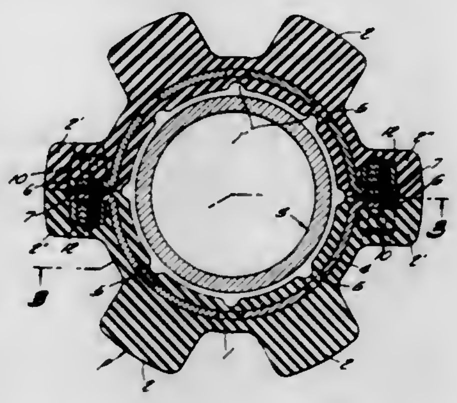

of the protector along the pipe, stops may be placed on the string above and below the protector.

3,397,018
JOURNAL LUBRICATOR
Edwin S. Pearce, Indianapolis, Ind., assignor to Ayrshire Collieries Corporation, Indianapolis, Ind., a corporation of Indiana
Filed June 28, 1965, Ser. No. 467,341
10 Claims. (Cl. 308—88)

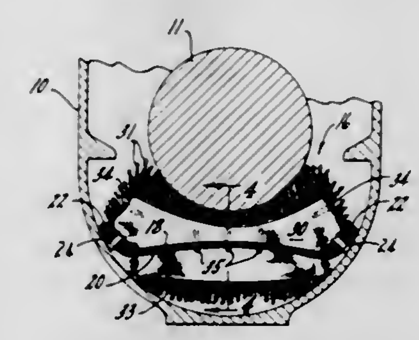

A railway journal lubricator is formed of two or more oil absorbent pads each carried by a leaf spring extending chordally of the rounded bottom of the journal box and resiliently holding the pad in contact with the underside of the journal. The leaf spring ends are curved upward to lie tangential to the box wall and the springs are interconnected at such ends by heavy webbing straps to form a unitary assembly, adapted to be inserted in and removed from the journal box as a unit. The webbing straps provide frictional facing at the spring ends to engage the box wall and frictionally inhibit movement of the pad assembly from proper position during operating conditions.

3,397,019
SEPARATOR
Roger E. Day, Clarence J. Metzger, and Leo Stella, Bristol, Conn., assignors to General Motors Corporation, Detroit, Mich., a corporation of Delaware
Filed June 23, 1966, Ser. No. 560,008
5 Claims. (Cl. 308—193)

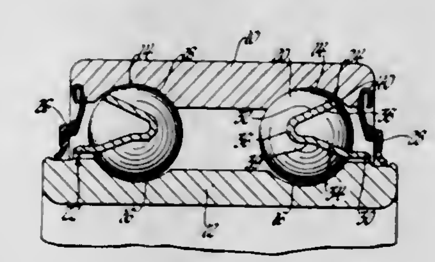

An antifriction bearing having an improved one-piece separator comprising an annular member or end ring

with reversely bent resilient fingers which engage one of the bearing raceways to hold the separator in assembly and are so shaped that the separator may be removed from the same side of the bearing that it is inserted for assembly.

3,397,020
SINGLE ROW TAPERED ROLLER BEARING
Herbert C. Edwards, Canal Fulton, Ohio, assignor to The Timken Roller Bearing Company, Canton, Ohio, a corporation of Ohio
Filed Feb. 16, 1966, Ser. No. 527,979
1 Claim. (Cl. 308—207)

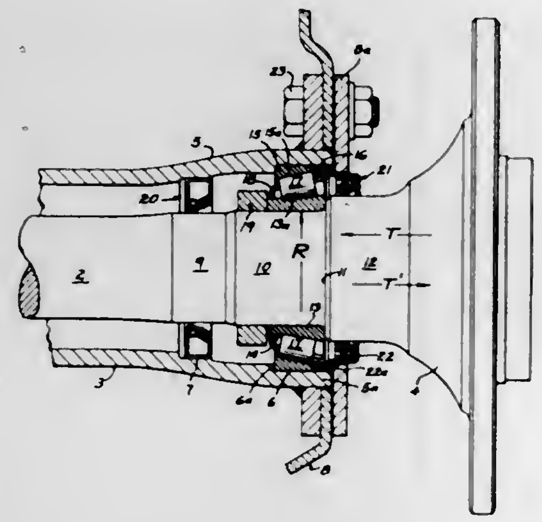

A single row tapered roller bearing having an organization of parts that will permit obtaining the maximum number of tapered rollers between the cone and the cup and will permit the obtaining of much closer tolerances and withstand greater thrust in the direction seating the rollers on the respective raceways through a novel, separately formed thrust rib associated with the cup.

3,397,021
AXLE BEARING CONSTRUCTION
Brian Fitzsimmons, Canton, Ohio, assignor to The Timken Roller Bearing Company, Canton, Ohio, a corporation of Ohio
Filed Mar. 14, 1966, Ser. No. 533,949
3 Claims. (Cl. 308—236)

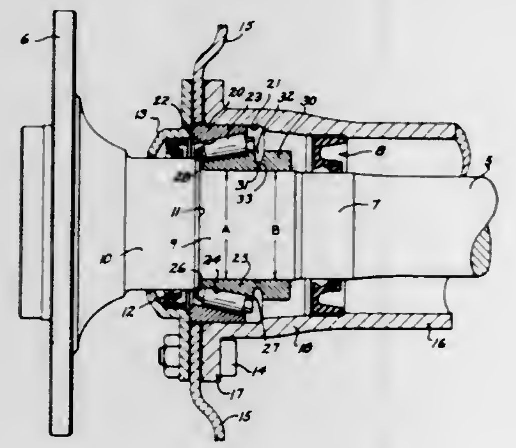

A bearing unit for an axle in which the position of the bearing cone is maintained substantially constant by a locating collar which is flexibly connected to the bearing cone and is assembled on the axle with a substantially heavier press fit than for the bearing cone.

3,397,022
OPTICAL FIBERS AND FIBER OPTICAL IMAGE-TRANSFER DEVICES HAVING LIGHT ABSORBING ELEMENTS
Henry B. Cole, East Woodstock, Conn., assignor, by mesne assignments, to American Optical Company, Southbridge, Mass., a corporation of Delaware
Original application Nov. 19, 1962, Ser. No. 238,372, now Patent No. 3,387,959, dated June 11, 1968. Divided and this application Dec. 20, 1965, Ser. No. 553,582
3 Claims. (Cl. 350—96)

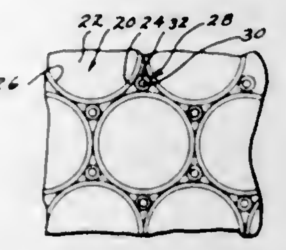

A fiber optical image-transfer device formed of a bundle of fibers of highly light-transmissive material and a number of interspersed elements of material having significant light-absorbing properties all interconnected in spaced side-by-side relationship with a minimum thickness of light-conducting matrix material between adjacent fibers which is substantially equal to the minimum thickness of cladding material between a fiber and any adjacent absorbing element and fibers having light-absorbing elements therein for use in making such devices.

3,397,023
LIGHT APERTURES
Edwin H. Land, Cambridge, Mass., assignor to Polaroid Corporation, Cambridge, Mass., a corporation of Delaware
Filed Dec. 16, 1964, Ser. No. 418,724
11 Claims. (Cl. 350—160)

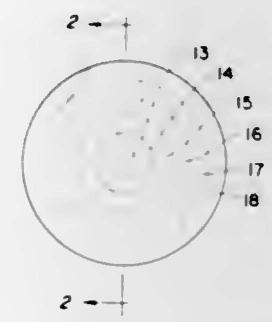

1. A light-filtering device comprising a solid, transparent element having in conjunction therewith photochromic bodies distributed in a plurality of concentric zones, the magnitude of the response of said photochromic bodies to itinerant light in each respective zone increasing as a function of the distance of said zone from the center of said element.

3,397,024
OPTICAL PRISM FOR USE IN BEAM DIVERGENCE REDUCING APPARATUS
James H. Boyden, Granada Hills, and Milton Laikin, Los Angeles, Calif., assignors to Korad Corporation, a corporation of New York
Filed Sept. 1, 1964, Ser. No. 393,615
3 Claims. (Cl. 350—199)

A beam divergence reducing apparatus is provided for a laser in the form of a corner reflecting prism having a concave face as an integral part thereof and a cooperating concave mirror of considerably larger diameter

than the concave face on the prism. The corner reflecting prism is positioned to intercept the beam and through refraction pass the beam onto the larger concave reflecting mirror which is positioned coaxially with the laser to face the corner reflecting prism and reflect the radiation received therefrom to define a beam having

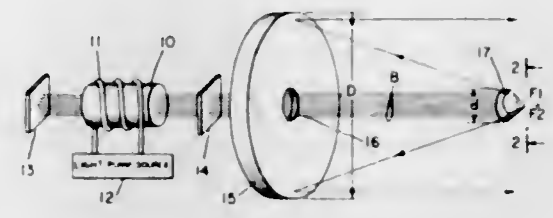

a decreased angle of divergence compared to the original divergence angle of the laser radiation. By the use of the corner reflector with a concave face, the beam passed to the larger reflecting surface is effectively decreased in power density such that a large concave reflecting mirror may be employed without fear of damaging the mirror.

3,397,025
ADJUSTABLE LIGHT APERTURE, PARTICULARLY A SLIT IN A DIAPHRAGM IN AN OPTICAL SYSTEM
Rasmus Strande Alm, 74 Eiksveien, Baerum, Norway
Filed June 26, 1964, Ser. No. 378,299
Claims priority, application Norway, July 6, 1963, 149,310
4 Claims. (Cl. 350—271)

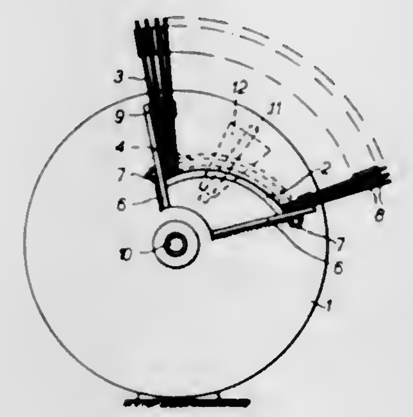

An adjustable light aperture, in particular a slit in a diaphragm in an optical system, in which at least one longitudinal edge of the slit is formed by one end of each element in a stack of elements which are independently pivotable about a common axle disposed parallel to and near the slit, the width of the slit thus being determined by the edge-forming ends through the angular position of the individual elements.

3,397,026
ADJUSTABLE EYEGLASS RETAINING STRAP
Joseph Spina, 3420 Washington Road, West Palm Beach, Fla. 33405
Filed Nov. 19, 1964, Ser. No. 412,507
1 Claim. (Cl. 351—157)

An elastic cord of requisite length and inherent tension having knotted free ends provided with funnel-like sleeves, more particularly, truncated flattened plastic sleeves through the medium of which end portions of the cord are bent upon themselves and fashioned into noose-like loops. These loops are manually regulable and are attachable to and adjustable along the usual temple-pieces. The size of each loop can be adjusted at will. A third truncated slack tape-up sleeve is slidingly adjustable on the median

strand portions of the cord and is regulable by hand to vary the effective length and to enable a user to reliably hold his spectacles in place for security, comfort and safety.

3,397,027
STICK-TYPE APPLICATOR CONSTRUCTION
Mortimer J. Harrison, Santurce, Puerto Rico, assignor to Valve Corporation of America, Bridgeport, Conn., a corporation of Delaware
Filed Jan. 25, 1966, Ser. No. 522,857
13 Claims. (Cl. 401—50)

An applicator construction for solidified stick-shape perfumed deodorant material of the like, comprising a

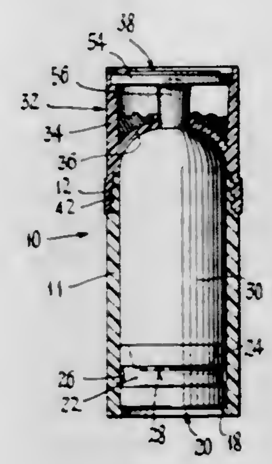

tubular container having a removable screw cap provided with an interior configuration which is desired on the end of the stick material. The cap has a filling opening for engagement by a filling nozzle to deposit molten stick material in the container so that the material solidifies with an end shape conforming to said interior configuration. A closure plug is adapted to close the filling opening of the cap after the filling operation.

3,397,028
HIGH-TEMPERATURE FUEL ELEMENT APPARATUS
Philipp Brauer, Mannheim-Seckenheim, Germany, assignor to Brown, Boveri & Cie A.G., Mannheim-Kafertal, Germany, a corporation of Germany
Filed Aug. 3, 1967, Ser. No. 658,157
Claims priority, application Germany, Aug. 11, 1966, B 88,435
10 Claims. (Cl. 431—115)

This invention relates to high-temperature fuel element apparatus from which hydrocarbons are directly converted into electrical energy. The fuel element **5** is arranged to be heated by means of burners **9** supplied with fuel from a pressure tank **1** through a fuel inlet line **3**, **8**. The fuel is preheated in line **3** as the latter passes through the heat exchanger **4** before entering the fuel element **5**. To provide H_2O and CO_2 from exhaust gas line **13** into

fuel line **3**, connecting pipes **14***a* or **14***b* are arranged at A within the heat exchanger **4** between the fuel being preheated in the supply line **3** and the exhaust lines **13** from which exhaust gases give up their heat in the heat exchangers. These connecting pipes **14***a*, **14***b* have an opening **15** located within the exhaust gas line **13** and directed with such opening facing upstream relative to the flow prevailing in the exhaust line **13** to capture and supply H_2O and CO_2 from the exhaust gases to the fuel gas.

According to a further embodiment, the connecting pipes **14***b* are C-shaped and have lower portions **16** extending into the fuel supply line **3**, said lower portions having openings arranged in the downstream flow direction of the hydrocarbon fuel to reduce the effect of static pressure in the fuel line. An increase is thus obtained in the amount of H_2O and CO_2 drawn from the exhaust gas line **13** into the upper portion **15** of the C-shaped connecting

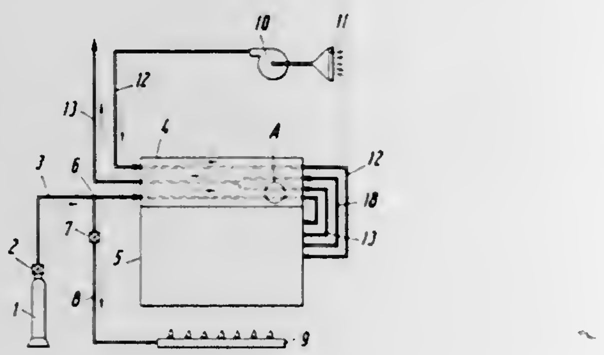

tube and thus supplied to the fuel supply line **3**. By utilizing the downstream pressure prevailing in the exhaust line **13**, H_2O or CO_2 is drawn into and supplied to the fuel supply line **3** via the connecting tube **14***a* or **14***b*. In one embodiment, the cross sections of the connecting pipes **14***a*, **14***b* are selected to correspond with the desired mixing ratio between the hydrocarbon fuel and the H_2O and CO_2 additions. According to another embodiment, throttle flaps **17** are arranged in the connecting pipes **14***b* and these flaps are made adjustable, either by automatic means or manual manipulation.

3,397,029
BURNER VALVE WITH IMPINGING MEANS
Charles K. Lovejoy, Atlanta, Ga., assignor to Scripto, Inc., a corporation of Georgia
Filed Mar. 1, 1966, Ser. No. 530,846
5 Claims. (Cl. 431—152)

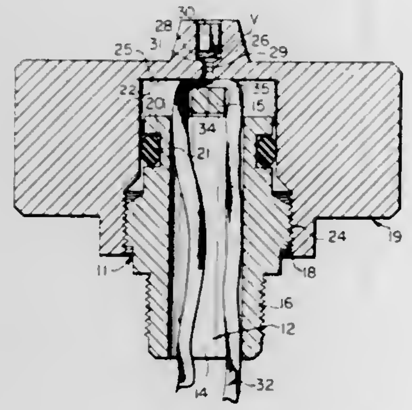

The present invention is directed to a burner valve construction for gas fuel lighters that includes a flame height adjustment wheel having a gas escape orifice and a restricted evaporation orifice formed therein, said orifices being in communication with each other, and an impinging means positioned within the gas escape orifice above the gas evaporation orifice so that when the manually operable, exteriorly positioned closure member is opened the fuel that is being emitted from the reservoir is directed upwardly against the impinging means for defusing any droplets of liquid fuel that may be present, thereby accomplishing complete evaporation prior to emission from the exterior extremity of the gas escape orifice.

3,397,030
GAS GENERATING SYSTEM
Frank T. Pisano, Haddonfield, N.J., and Lennord L. Pitney, Levittown, Pa., assignors to the United States of America as represented by the Secretary of the Army
Filed Sept. 6, 1966, Ser. No. 577,544
5 Claims. (Cl. 431—157)

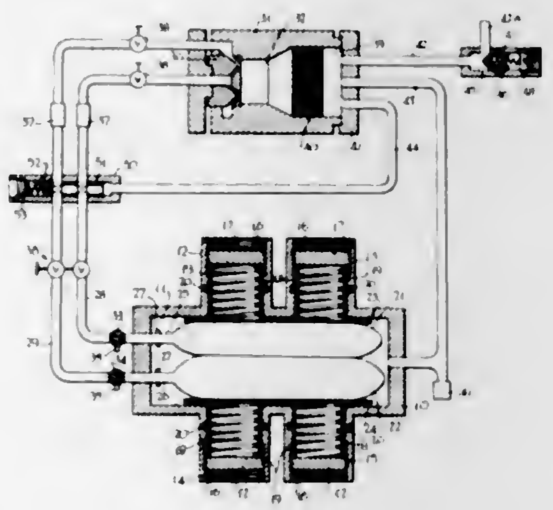

A self-sustaining gas generating system having a pair of collapsible containers of hypergolic fuel and an oxidizer mounted in a pressure chamber housing and responsive to corresponding spring loaded pressure plate arrangements. A feedback conduit interconnects the pressure chamber housing with a combustion chamber housing.

3,397,031
BURNER IGNITION SYSTEM
Joseph F. Kern and Arnold B. Desnoes, Massapequa, and John P. Adams, Amityville, N.Y., assignors to Puregas Equipment Corp., Copiague, N.Y., a corporation of New York
Filed Aug. 31, 1966, Ser. No. 576,289
5 Claims. (Cl. 431—202)

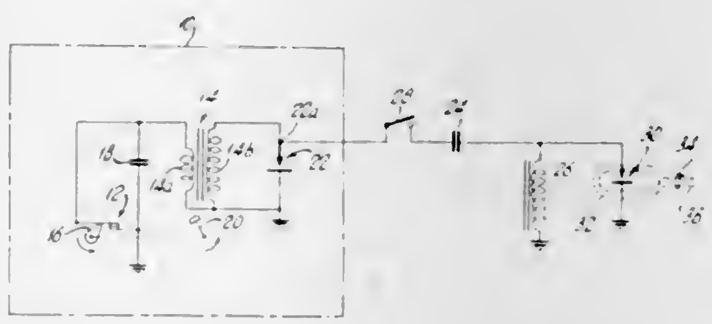

An ignition system for gas burners or the like for which the power is taken from the inductive coil of a combustion engine ignition system through a capacitor. The circuit of the burner ignition system is series resonant, with a time constant so adjusted to avoid interference with the sparking action of the engine plug to which it is attached.

CHEMICAL

3,397,032
COLORATION OF POLYOLEFINS
John Mather and James Walter Stimpson, Harrogate, and William Alexander O'Neill, Ponteland, England, assignors to Imperial Chemical Industries Limited, London, England, a corporation of Great Britain
No Drawing. Continuation-in-part of applications Ser. No. 120,948, June 30, 1961, and Ser. No. 124,325, July 17, 1961. This application Aug. 3, 1964, Ser. No. 388,977 (Filed under Rule 47(a) and 35 U.S.C. 116)
12 Claims. (Cl. 8—100)

A process for improving the dye-receptivity of articles containing or consisting of stereoregular polyolefins characterized by formation within the article of a quaternized amine from an amine and a quaternizing agent which are separately introduced into the article and interact only with the article. Preferred quaternizing agents are esters of oxyacids of phosphorus and sulfur

3,397,033
TEXTILE BLEACHING PROCESS
Peter Ney, Frankfurt am Main, and Walter Kuhnmünch, Frankfurt am Main-Heddernheim, Germany, assignors to Deutsche Gold- und Silber-Scheideanstalt vormals Roessler, Frankfurt am Main, Germany
No Drawing. Filed Apr. 5, 1965, Ser. No. 445,696
Claims priority, application Germany, Apr. 9, 1964, D 44,106
3 Claims. (Cl. 8—111)

Process for bleaching fibrous textile materials which comprises impregnating the fibrous textile material with an aqueous peroxidic bleaching solution, removing the excess bleaching solution, storing the thus impregnated fibrous textile material for a period of about 3 to 10 hours at a temperature between room temperature and moderately raised temperature, then subjecting the fibrous textile material to steam under pressure at a temperature between 120 and 200° C. for a period of 15 to 120 seconds.

3,397,034
METHOD AND APPARATUS FOR TREATING EXHAUST GASES
Anthony J. Tulleners, Brea, and Robert H. Hass, Fullerton, Calif., assignors to Union Oil Company of California, Los Angeles, Calif., a corporation of California
Continuation-in-part of application Ser. No. 179,949, Mar. 15, 1962. This application Jan. 19, 1966, Ser. No. 533,397
11 Claims. (Cl. 23—2)

A method and apparauts for treating the exhaust gases from an internal combustion engine to remove noxious constituents therefrom. The method comprises the steps of contacting the exhaust gases with a bed of particleform alkaline refractory solids to agglomerate finely divided particulate matter and to neutralize the hydrogen halide constituents of the exhaust gases, subsequently separating solids from the gases and then conditioning the exhaust gases to remove noxious gaseous constituents therefrom. The invention includes an integral apparatus for treating the exhaust gases.

3,397,035
AMMONIUM POLYPHOSPHATES
Chung Yu Shen, St. Louis, Mo., and Norman Earl Stahlheber, Columbia, Ill., assignors to Monsanto Company, St. Louis, Mo., a corporation of Delaware
No Drawing. Filed Dec. 22, 1964, Ser. No. 420,459
18 Claims. (Cl. 23—106)

A process is described for preparing a substantially water-insoluble crystalline ammonium polyphosphate by thermally condensing a phosphate containing material, an ammoniating agent and a condensing agent in the presence of an additive of a substantially water-insoluble crystalline ammonium polyphosphate, the additive being present in amounts of at least 1 part per 10 parts, by weight of the reactants and the thermal condensation conducted at temperatures of from about 100° C. to about 350° C. for a time sufficient to convert the reactants to a crystalline ammonium polyphosphate.

3,397,036
PROCESS FOR THE PREPARATION OF POLYAMMONIUM PHOSPHATES
Arthur Paul Narins, Los Angeles, Calif., James Austin, Maidenhead, England, John D. Ellis, Lakeland, Fla., and Alan Conners, Chalfont St. Giles, England, assignors to Occidental Research & Engineering Limited, London, England, a British company
Filed Nov. 9, 1965, Ser. No. 507,014
Claims priority, application Great Britain, Nov. 16, 1964, 46,597/64
10 Claims. (Cl. 23—106)

A process for reacting high-strength wet process phosphoric acid with anhydrous ammonia by feeding continuously such acid to a closed reaction zone and causing the acid to form a moving layer therein, feeding continuously anhydrous ammonia to said zone to contact an exposed surface of said acid layer, continually scraping to remove the reacted surface layer thereby to expose acid underlying such surface to the ammonia, and removing continuously the ammoniated acid reaction product from said zone at a region of said layer spaced from the region of acid feed to such layer.

3,397,037
DIGESTION OF TITANIUM-BEARING ORES
George Leathwhite Roberts, Jr., Lynchburg, Horace Andrew Bragg, Arrington, and Walter Roye Whately, Lynchburg, Va., assignors to American Cyanamid Company, Stamford, Conn., a corporation of Maine
No Drawing. Filed July 8, 1965, Ser. No. 470,584
10 Claims. (Cl. 23—117)

In a process for producing titanium dioxide pigments, a titanium-bearing ore is digested with a strong mineral acid in the presence of a surface active agent to produce a digestion cake. The digestion cake is then leached with either water or a dilute mineral acid. The use of a surface active agent decreases the time necessary to effect satisfactory leaching. The surface active agent can be premixed with the acid prior to mixing with the ore, or the acid and the surface active agent can be added simultaneously to the ore as separate streams.

3,397,038
MANUFACTURE OF A REACTIVE TRISODIUM PHOSPHIDE
Alfred O. Minklei, Kenmore, N.Y., and Hans Z. Lecher, Plainfield, N.J., assignors to Hooker Chemical Corporation, Niagara Falls, N.Y., a corporation of New York
No Drawing. Filed Nov. 30, 1964, Ser. No. 414,889
9 Claims. (Cl. 23—204)

A process for producing alkali metal phosphides by reacting a finely divided alkali metal with phosphorus at low temperatures in the presence of a polycyclic aromatic hydrocarbon and an activating ether solvent.

3,397,039
PREPARATION OF ALKALI METAL PHOSPHIDES
Donald J. Peterson, Springfield Township, Ohio, assignor to The Procter & Gamble Company, Cincinnati, Ohio, a corporation of Ohio
No Drawing. Filed May 17, 1967, Ser. No. 639,045
10 Claims. (Cl. 23—204)

Process for preparing alkali metal phosphides from alkali metals and phosphorus by effecting electron transfer from the alkali metal to the phosphorus with a carrier material capable of forming radical anions or dianions upon reaction with alkali metals in an ether reaction medium.

3,397,040
SPECTROPHOTOMETRIC METHOD FOR THE DETERMINATION OF GOLD
Hubert W. Lakin, Lakewood, and Harry M. Nakagawa, Denver, Colo., assignors to the United States of America as represented by the Secretary of the Interior
No Drawing. Filed Feb. 28, 1966, Ser. No. 532,533
7 Claims. (Cl. 23—230)

1. A process for detecting and determining the amount of gold present in geologic materials containing gold values and not containing silver, palladium, thallium, antimony, cadmium or uranium in amounts that would interfere with the detecting and determining process comprising

(a) roasting a measured, particulate sample of geologic material;
(b) contacting said roasted sample with a concentrated hydrobromic acid-bromine solution for a period of time sufficient to dissolve out elemental gold and gold compounds present in the sample and form a pregnant acid solution;
(c) diluting said pregnant acid solution to form a diluted solution;
(d) mixing said diluted solution including any solid sample residue remaining after the acid contacting step with an ethyl ether solution to extract gold values from the diluted solution and residue, and form, along with remaining residue, an ethyl ether extract phase and an acid raffinate phase;
(e) separating said extract phase from the raffinate and remaining residue;
(f) contacting said ethyl ether extract phase with a dilute hydrobromic acid solution more dilute than the previously mentioned dilute hydrobromic acid solution to form an ethyl ether raffinate phase and an acid extract phase;
(g) separating the ethyl ether raffinate phase from the acid extract phase;
(h) evaporating completely said ethyl ether raffinate phase to form a solid residue;
(i) dissolving said solid residue in a dilute solution of a compound selected from the group consisting of ammonium acetate and nitrilo triacetic acid;
(j) adding 4,4′-bis(dimethyl amino)thiobenzophenone (TMK) in an organic carrier solvent to the thus formed solution of solid residue (i) to yield a test solution with a red color the intensity of which is proportional to the amount of gold present therein; and
(k) determining the amount of gold in the test solution.

3,397,041
SULFUR PURIFICATION BY FRACTIONAL CONDENSATION
Ronald D. Rivers, Kingston, Tenn., assignor to the United States of America as represented by the United States Atomic Energy Commission
Filed June 17, 1966, Ser. No. 559,352
6 Claims. (Cl. 23—294)

1. A method of removing organic and inorganic impurities from sulfur to provide product sulfur having less than about one part of said impurities per million parts of sulfur, comprising the steps of confining a sulfur charge containing organic and inorganic impurities, heating the sulfur charge to a temperature sufficient to effect boiling thereof for providing vapors consisting of sulfur and impurities volatile at and below the boiling temperature of sulfur, cooling the vapors to a temperature sufficient to effect condensation of the sulfur from the vapors, introducing a stream of inert gas into the confinement above the sulfur charge at a location in which the temperature of at least a portion of the vapors is less than the condensing temperature of the sulfur and greater than the condensing temperature of essentially all the volatilized impurities to contact and entrain the latter, exhausting the impurity-laden stream of inert gas from the confinement, thereafter discharging vapors consisting essentially of sulfur from the confinement to separate the sulfur from non-volatile impurities and volatile impurities in the sulfur charge having a higher volatility temperature than that of sulfur, and distilling and collecting the discharged sulfur vapors.

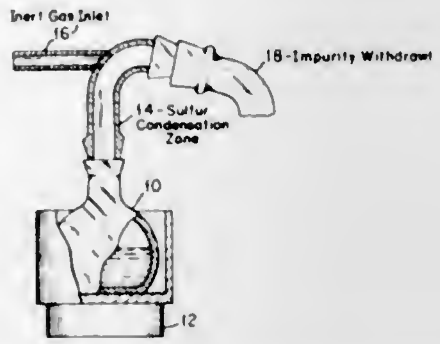

3,397,042
PRODUCTION OF DISLOCATION-FREE SILICON SINGLE CRYSTALS
Patrick H. Hunt, Richardson, Tex., assignor to Texas Instruments Incorporated, Dallas, Tex., a corporation of Delaware
Original application Oct. 15, 1963, Ser. No. 316,347, now Patent No. 3,275,417, dated Sept. 27, 1966. Divided and this application Aug. 27, 1965, Ser. No. 493,955
4 Claims. (Cl. 23—301)

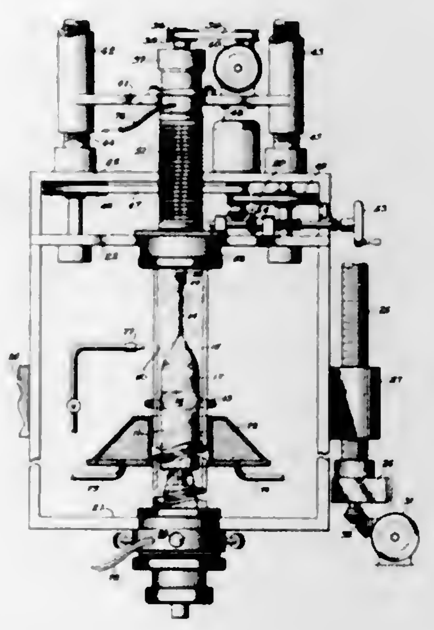

Disclosed are apparatus and methods for the production of dislocation-free crystals of semiconductor material. A semiconductor rod is supported at the bottom thereof in a controlled atmosphere within a nonconductive tube. Means including a single turn, inductive heating member encircles the rod outside the tube and is mounted for relative movement with respect to the rod for production of a molten zone in the rod when energized by a frequency alternating current. A cooled, single turn, shorted focusing coil encircles the axis of the rod immediately below the heating member to control the molten zone from limiting the character of the height thereof. After a molten zone is created in the top part of the rod, a single crystal seed is dipped into the molten zone and the seed is rotated while withdrawing the same from the molten zone at a withdrawal rate initially substantially in excess of the upward movement of the rod and then at a rate substantially corresponding with the rate of movement of the rod.

3,397,043
SINGLE PHASE TERNARY SEMICONDUCTING COMPOUNDS OF SILVER OR COPPER, THALLIUM, AND SULFUR OR SELENIUM
Donald Paul Spitzer, Riverside, Conn., assignor to American Cyanamid Company, Stamford, Conn., a corporation of Maine
No Drawing. Filed June 1, 1966, Ser. No. 554,302
5 Claims. (Cl. 23—315)

Single phase semiconducting compounds of silver or copper, thallium and sulfur or selenium possessing thermal electric properties are provided.

3,397,044
ALUMINUM-IRON ARTICLES AND ALLOYS
Linton D. Bylund, Chesterfield County, Va., assignor to Reynolds Metals Company, Richmond, Va., a corporation of Delaware
Continuation-in-part of application Ser. No. 573,776, Aug. 8, 1966. This application Aug. 11, 1967, Ser. No. 660,132
26 Claims. (Cl. 29—183)

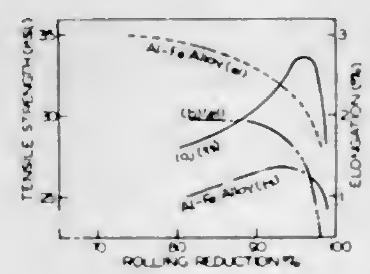

Aluminum foil and other wrought articles including drawn and ironed can bodies are produced from aluminum base alloys containing up to about 2.5% iron, having a low work hardening rate above 75% reduction and sufficient ductility at high cold work levels to permit cold working to the extent of at least 90% without the necessity of annealing or stress relieving. Also provided are novel aluminum base alloys containing iron and at least one additional alloying element such as 0.1–2.5% magnesium or 0.1–1.5% manganese. A preferred can alloy includes about 0.75–1.2% iron, about 0.1–1.0% magnesium and about 0.25–0.8% manganese.

3,397,045
COMPOSITE METAL ARTICLE
Joseph Winter, New Haven, Conn., assignor to Olin Mathieson Chemical Corporation, a corporation of Virginia
Original application Oct. 2, 1962, Ser. No. 229,262. Divided and this application May 23, 1966, Ser. No. 565,664
5 Claims. (Cl. 29—191)

An integral composite sheet metal article having good bond strength, with the core and cladding being bonded together in direct metal-to-metal contact and with the interface between the core and cladding being characterized by having greater contact area between core and cladding than between planar sheets and having a wavelike interface with a plurality of peaks, said peaks being

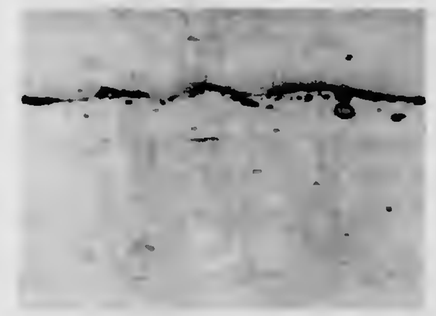

irregular in distribution and having a greater length than height.

3,397,046
RED - CORROSION - INHIBITED SILVER PLATED COPPER CONDUCTOR IN CONTACT WITH A FLUORINATED OLEFIN POLYMER
William L. Greyson, Chappaqua, N.Y., assignor to Tensolite Insulated Wire Co., Inc., Tarrytown, N.Y., a corporation of Delaware
Continuation-in-part of application Ser. No. 212,150, July 24, 1962. This application June 13, 1966, Ser. No. 556,901
2 Claims. (Cl. 29—195)

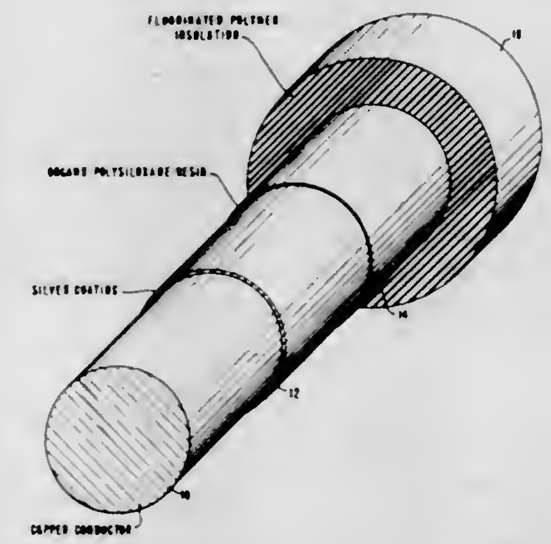

An improved insulated electrical conductor which is resistant to corrosion is shown. The conductor includes a central copper conductor having a silver coating. The silver coating has an extremely thin coating of a cured organo polysiloxane which is derived from a monomethyl silicone fluid of specific characteristics and which is cured below the temperature at which silver cold fuses. The insulation which covers the so-coated conductors is a fluorinated olefin polymer. In a preferred embodiment, the silicone fluid in addition contains an alkoxide which further inhibits the "red" corrosion which develops on conventional silver coated copper conductors.

3,397,047
BLOW MOLDING APPARATUS FOR A GLASSWARE FORMING MACHINE
George E. Rowe, Wethersfield, Conn., assignor to Emhart Corporation, Bloomfield, Conn., a corporation of Connecticut
Filed June 15, 1965, Ser. No. 464,162
7 Claims. (Cl. 65—260)

A blow mold used in the final shaping of a previously formed parison in a glassware forming machine wherein the mold apparatus comprises a bottom plate, a body mold, a neck ring, and a thimble within the neck ring, and wherein the thimble is held in engagement with the

top or "finish" of the finally shaped article of glassware to prevent its toppling or other movement on the bottom

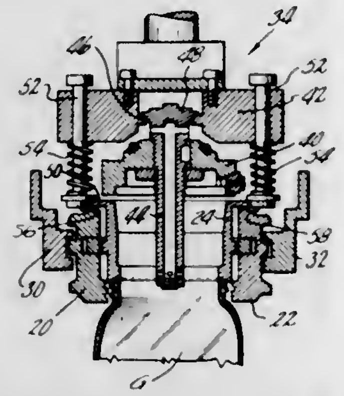

plate while the other said elements of the mold are disengaged.

3,397,048
CONTROL OF PLANT LIFE
Harold Lester Lindaberry, Aurora, Ill., assignor to Pennsalt Chemicals Corporation, Philadelphia, Pa., a corporation of Pennsylvania
No Drawing. Filed Apr. 5, 1966, Ser. No. 540,190
5 Claims. (Cl. 71—66)

Control of plant life with a synergistic mixture of the anion of 3,6-endoxohydro-orthophthalic acid, and a 1,1′-ethylene-2,2′-dipyridylium dihalide.

3,397,049
METHOD OF CONTROLLING MESQUITE
Robert H. Beatty, Philadelphia, Pa., assignor to Amchem Products, Inc., Ambler, Pa., a corporation of Delaware
No Drawing. Filed Apr. 26, 1965, Ser. No. 451,056
3 Claims. (Cl. 71—84)

The herbicidal composition and method for treating mesquite plants including a 2,4,5-trichlorophenoxyacetic acid compound and a thiocyanate salt.

3,397,050
HERBICIDAL METHOD
Harvey M. Loux, Valley View, Del., assignor to E. I. du Pont de Nemours and Company, Wilmington, Del., a corporation of Delaware
No Drawing. Continuation-in-part of application Ser. No. 590,544, Oct. 31, 1966. This application Dec. 13, 1967, Ser. No. 690,077
12 Claims. (Cl. 71—92)

Novel uracils of the following formula:

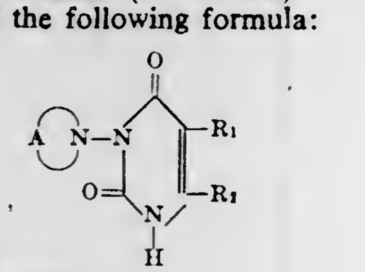

wherein R_1 and R_2 and

are as defined hereinafter are useful as herbicides.

Exemplary of such compounds is: 5-bromo-6-methyl-3-(1-piperidino)uracil.

3,397,051
HERBICIDAL CONCENTRATE COMPOSITION
Andrew Stefcik and John P. G. Beiswanger, Easton, Pa., assignors to GAF Corporation, a corporation of Delaware
No Drawing. Filed May 5, 1966, Ser. No. 547,774
8 Claims. (Cl. 71—97)

A clear and stable herbicidal composition of matter comprising an aqueous solution containing from 30 to 60 parts by weight of an arsenical compound of the formula

$$R_n\text{—ASO.(OH)}_{3-n}$$

and the water soluble ammonium and alkali metal salts of said compound wherein R is a hydrocarbon group selected from the class consisting of saturated hydrocarbon of from 1 to 5 carbon atoms and ethylenic hydrocarbon of from 2 to 3 carbon atoms, n is an integer from 1 to 2, and from 5 to 50 parts by weight of a monophosphate ester of ethoxylated alcohol of the formula

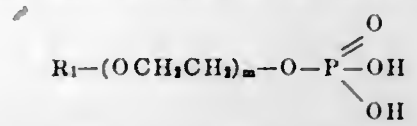

and the water soluble ammonium, alkali metal, amine and alkanolamine salts of said monophosphate ester wherein R_1 is an alkyl of from 1 to 10 carbon atoms and m is an integer of from 1 to 8.

3,397,052
PROCESS FOR CONTROLLING PLANT LIFE
Herbert Q. Smith, King of Prussia, Pa., assignor to Pennsalt Chemicals Corporation, Philadelphia, Pa., a corporation of Pennsylvania
No Drawing. Filed Aug. 29, 1966, Ser. No. 575,555
3 Claims. (Cl. 71—97)

Process for the control of plant life using as active agent a hexaalkylditin of structure

$$(R)_3\text{—Sn—Sn—}(R)_3$$

where R is an alkyl group containing from 1 to 6 carbon atoms.

3,397,053
METHOD OF KILLING PLANTS
Carl Bordenca, Ponte Vedra Beach, and John M. Derfer, Jacksonville, Fla., assignors, by mesne assignments, to SCM Corporation, New York, N.Y., a corporation of New York
No Drawing. Filed Aug. 11, 1965, Ser. No. 478,985
16 Claims. (Cl. 71—98)

A method for controlling plant growth has been discovered and is described. The method comprises contacting plants with a phytotoxic amount of a β-dialkylaminoalkyl terpene ether of the formula

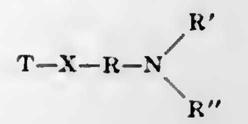

where T is a monoterpene hydrocarbon radical, X is selected from the group consisting of sulfur and oxygen, R is a lower alkylene group, and R′ and R″ are like or dissimilar alkyl groups.

The invention is advantageous in that undesirable plants are injured, damaged, or often killed when contacted with the class of compounds falling within the scope of the above formula. The invention is further advantageous in that the phytotoxic compounds and compositions containing them are relatively nontoxic to higher animals and man and are not hazardous skin irritants.

3,397,054
PROCESS FOR CONTROLLING PLANT GROWTH
Richard D. Hart, Ambler, Pa., and Howard E. Harris, Bloomfield, N.J., assignors to Schering Corporation, Bloomfield, N.J., a corporation of New Jersey
No Drawing. Continuation-in-part of applications Ser. No. 220,555, Aug. 30, 1962, and Ser. No. 323,577, Nov. 14, 1963. This application Feb. 16, 1966, Ser. No. 527,732
10 Claims. (Cl. 71—105)

1. The process for controlling plant growth which comprises substantially uniformly distributing in an area wherein the plant is grown, in amount sufficient to exert herbicidal action, a formulated composition including a chemical compound having a molecular structure in which the 4-hydroxybenzonitrile nucleus has attached thereto in the 3-position a halogen atom.

3,397,055
METHOD FOR THE CONTROL OF PLANT GROWTH
Edward D. Weil, Yonkers, and Edwin Dorfman, Grand Island, N.Y., assignors to Hooker Chemical Corporation, Niagara Falls, N.Y., a corporation of New York
No Drawing. Continuation-in-part of application Ser. No. 260,078, Feb. 20, 1963. This application May 5, 1966, Ser. No. 547,753
6 Claims. (Cl. 71—115)

1. A method for the control of plant growth which comprises applying to the locus to be treated a phytotoxic amount of a mixture of compounds selected from the group consisting of aminotrihalophenylacetic acids, salts of said acids, esters of said acids, and amides of said acids, wherein the halogens of said compounds are selected from the group consisting of chlorine, bromine, and mixtures thereof, and wherein about 30 to about 75 percent of said mixture of compounds is selected from the group consisting of 5-amino-2,3,6-trihalophenylacetic acid, the salts of said acid which convert to said acid in the soil, the esters of said acid which convert to said acid in the soil and the amides of said acid which convert to said acid in the soil, and mixtures thereof.

3,397,056
SEPARATION OF ALUMINUM FROM IMPURE ALUMINUM SOURCES
Gilbert S. Layne and James O. Huml, Midland, Mich., assignors to The Dow Chemical Company, Midland, Mich., a corporation of Delaware
Filed Nov. 15, 1965, Ser. No. 507,974
11 Claims. (Cl. 75—68)

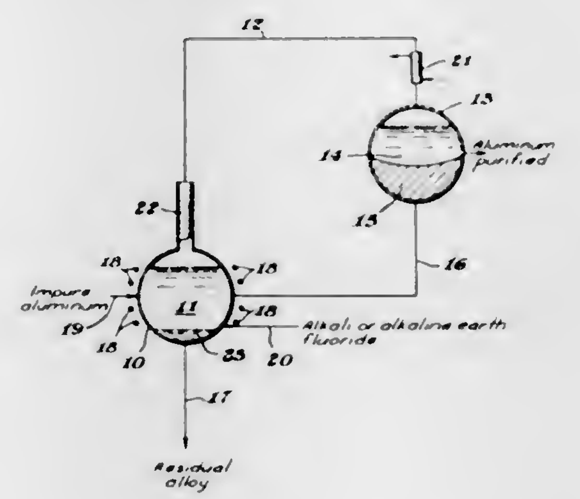

1. An improved process for the purification of an impure aluminum source which comprises

(1) heating in a reaction zone at an absolute pressure above about 100 mm. of mercury a molten mixture of an impure aluminum source and a metal fluoride adjuvant selected from the group consisting of magnesium fluoride and mixtures of aluminum fluoride with at least one of sodium fluoride, potassium fluoride, calcium fluoride, and magnesium fluoride to a temperature of from the melting point of the metal fluoride adjuvant to the boiling point of the lowest boiling component introduced into the reaction mixture at the pressure employed to vaporize products therefrom,

(2) condensing the vaporized products as liquids in a quiescent zone, and

(3) allowing the liquid aluminum to coalesce into a phase discrete from the metal fluoride phase.

11. A process for the removal of oxide and heavy metal contaminants from magnesium fluoride which comprises

(1) heating in a reaction zone at an absolute pressure from about 100 to 1000 mm. of mercury absolute, a molten mixture of an impure aluminum source and a magnesium fluoride containing said oxide or heavy metal impurities at a temperature of between about 1300 and 1750° C.,

(2) condensing the vaporized products as liquids in a quiescent zone,

(3) allowing the magnesium fluoride phase to separate from the aluminum phase, and

(4) while maintaining at least the aluminum phase in the liquid state separating the phases to produce a purified magnesium fluoride.

3,397,057
METHOD FOR PRODUCING FLOWABLE METAL POWDERS
John H. Harrington, Warwick, and Arnold L. Prill, Suffern, N.Y., assignors to The International Nickel Company, Inc., New York, N.Y., a corporation of Delaware
No Drawing. Filed Sept. 26, 1966, Ser. No. 581,768
17 Claims. (Cl. 75—213)

Fine metal powders such as carbonyl nickel powder having poor flow properties are converted into agglomerates having improved flow properties by tumbling the powders in a balling liquid such as water to form separate ball agglomerates, drying the agglomerates and sintering the agglomerates in a protective atmosphere at a temperature at which substantial sintering occurs within the agglomerates but below that at which substantial sintering occurs between agglomerates so as to produce substantially spherical, flowable agglomerates having a particle size in the range of about 20 to about 1,000 microns.

3,397,058
DIAZOTYPE MATERIAL
Arie van Loon and Hubertus Wilhelmus Henricus Maria Roncken, Venlo, Netherlands, assignors to Chemische Fabriek L. van der Grinteen N.V., Venlo, Netherlands, a corporation of Dutch law
No Drawing. Continuation-in-part of application Ser. No. 851,968, Nov. 10, 1959. This application July 14, 1964, Ser. No. 382,670
Claims priority, application Netherlands, Nov. 10, 1958, 233,064
20 Claims. (Cl. 96—49)

1. A one-component diazotype material comprising a support sensitized with a light-sensitive composition containing, in the absence of an azo coupling component, a light-sensitive diazo compound of the formula

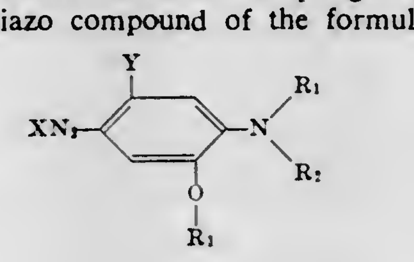

in which

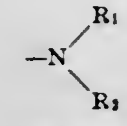

is selected from the class consisting of dialkylamino groups, N-alkyl-N-benzylamino groups, N-alkyl-N-cyclohexylamino groups, (alkyl)(acyloxyalkyl)amino groups, di(acyloxyalkyl)amino groups and the morpholino ring,

R_3 is a phenyl group,
X is an anion, and
Y is selected from the class consisting of hydrogen and halogen atoms.

9. 1-diazo 4-(di-alkylamino) 3-phenoxy benzene compounds.

19. A process for the production of a diazotype print which comprises imagewise exposing to actinic light a diazotype material as defined in claim 1 and developing the exposed material by applying to it a film of a liquid developer containing phloroglucinol.

3,397,059
PHOTOCHROMIC POLYMETHYLMETHACRYLATE ELEMENT ON CONTACT WITH POLYESTER RESINOUS MATERIAL
George Henry Dorion, New Canaan, Guenter Willi Nachtigall, Norwalk, and John Joseph Cerreta, Monroe, Conn., assignors to American Cyanamid Company, Stamford, Conn., a corporation of Maine
No Drawing. Filed July 1, 1964, Ser. No. 379,745
3 Claims. (Cl. 96—87)

This invention relates to an article of manufacture comprising (1) a self-supporting substrate carrying thereon (2) a layer of a film-forming thermoplastic resin having a photochromic material intimately intermingled therewith and a polyester resin. More particularly, this invention relates to an article of manufacture comprising (1) a self-supporting substrate carrying thereon (2) a layer of a photochromic material-containing, film-forming thermoplastic resin and (3) a polyester resin composed of (a) tetrahydrophthalic anhydride, (b) adipic acid, (c) neopentyl glycol and (d) trimethylolethane or (e) tetrahydrophthalic anhydride, (f) a self-condensed dimer acid, (g) 1,5-pentanediol and (h) trimethylolethane. Still more particularly, this invention relates to an article of manufacture comprising (1) a self-supporting substrate carrying thereon (2) a layer of a film-forming thermoplastic resin having a photochromic material intimately intermingled therewith and (3) a polyester resin, which article of manufacture possess the ability to change color when subjected to ultraviolet light and revert to its original color when removed from said ultraviolet light.

3,397,060
SUPERSENSITIZATION OF GREEN-SENSITIVE SILVER HALIDE EMULSIONS
Judith A. Schwan and Jean E. Jones, Rochester, N.Y., assignors to Eastman Kodak Company, Rochester, N.Y., a corporation of New Jersey
Filed Oct. 19, 1964, Ser. No. 404,888
13 Claims. (Cl. 96—104)

Green-sensitized silver halide emulsions containing combinations of (1) an oxacarbocyanine dye which does not contain more than 1 phenyl substituent and (2) a benzimidazolocarbocyanine dye have substantially higher relative speeds and image dyes developed in these emulsions have higher stability on incubation (i.e., storage at elevated temperatures and humidities) than emulsions containing the corresponding dye combinations that are outside the immediate invention. The immediate dye combinations are further characterized by producing substantially no stain in the processed emulsions that contain them.

3,397,061
DEPECTINIZED COCOA AND FROSTING COMPOSITIONS CONTAINING THE SAME
Morris H. Katz, St. Louis Park, Minn., assignor to The Pillsbury Company, Minneapolis, Minn., a corporation of Delaware
Filed Feb. 12, 1965, Ser. No. 432,100
17 Claims. (Cl. 99—26)

Prevention of an increase in viscosity upon storage of cocoa food compositions such as cocoa containing frostings is effectively inhibited via the employment of a depectinized cocoa. The depectinized cocoa is suitably provided by enzymatically treating an aqueous cocoa slurry with a pectinase. Additional enzymatic treatment of the depectinized aqueous cocoa slurry with hemi-cellulase and amylase and subsequent incorporation of the result-

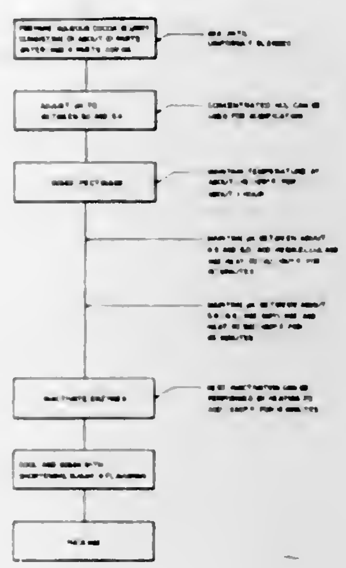

ant enzymatically treated cocoa into frosting prepared therefrom imparts a synergistic resistance to a viscosity increase during storage for the resultant cocoa frosting composition.

3,397,062
MAPLE PRODUCT FOR BEVERAGE, FLAVORING AND THE LIKE
Raymond S. Nessly, 144 N. Marshall St., York, Pa. 17402
No Drawing. Filed Oct. 13, 1964, Ser. No. 403,657
2 Claims. (Cl. 99—28)

A liquid maple product for use as a beverage, flavoring material, and the like, concentrated from natural maple syrup to have a Brix rating preferably between approximately 8° and 45°.

3,397,063
BEVERAGE MIX AND PROCESS
Paul O. Carlson, Hickory Corners, Mich., and Elmer W. Michael, Evansville, Ind., assignors to General Foods Corporation, White Plains, N.Y., a corporation of Delaware
No Drawing. Continuation of application Ser. No. 452,012, Apr. 29, 1965. This application Aug. 1, 1966, Ser. No. 569,111
4 Claims. (Cl. 99—78)

A new and improved fruit flavored, beverage drink in the form of a powder adapted to be reconstituted in cold water, has been prepared. The surface of the sugar granules, sugar being the major weight constituent of the blend, have been uniformly impregnated with a coloring agent and a desiccating agent without destroying their crystalline structure.

3,397,064
REFRIGERATED DOUGH PRODUCT
Samuel A. Matz, Liverpool, N.Y., assignor to The Borden Company, New York, N.Y., a corporation of New Jersey
No Drawing. Filed Feb. 19, 1965, Ser. No. 434,115
3 Claims. (Cl. 99—90)

Chemically leavened dough products for refrigerated storage and subsequent baking having incorporated therein a leavening composition in amount sufficient to leaven a dough and from about 0.1 to about 3 parts by weight, for every 100 parts by weight of flour in the dough, of a potassium polymetaphosphate.

3,397,065
EDIBLE FOOD RELEASE COMPOSITION
David K. Cunningham, Minneapolis, Minn., and Richard G. Hans, Louisville, Ky., assignors to The Pillsbury Company, Minneapolis, Minn., a corporation of Delaware
Filed July 23, 1965, Ser. No. 474,440
22 Claims. (Cl. 99—90)

An edible release agent comprised of an edible oil and a suspension of finely divided silica particles having a particle size of less than 0.3 micron therein; food products and the inner surfaces of food containers coated with the same.

3,397,066
PROCESS FOR PREPARING A FLOWABLE FLOUR AND PRODUCT FORMED BY SAID PROCESS
Perrie D. Somers, Jr., and Robert E. Mauseth, Minneapolis, Minn., assignors to International Milling Company, Inc., Minneapolis, Minn., a corporation of New York
Filed June 5, 1964, Ser. No. 372,864
6 Claims. (Cl. 99—93)

Preparation of a non-agglomerated free flowing easily wettable flour from a parent flour by classifying parent flour into a granular portion containing 10–50% of the parent flour and a fine portion containing 90–50% by sifting on a screen or sieve having openings in the range of 86 microns to 130 microns whereby the "overs" constitute the granular portion having a wettability index of less than 90 seconds and a flowability index of less than 60 seconds.

3,397,067
FLOUR PRODUCT AND METHOD OF MAKING
Edward L. Galle, St. Paul, Minn., assignor to The Pillsbury Company, Minneapolis, Minn., a corporation of Delaware
Continuation-in-part of application Ser. No. 382,283, July 13, 1964. This application Jan. 20, 1967, Ser. No. 610,554
10 Claims. (Cl. 99—93)

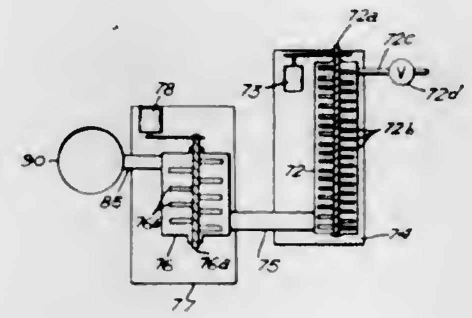

Agglomerating high protein fine cereal flour by increasing the moisture content, briefly mixing and agitating the moistened flour in a first zone, immediately transferring the flour to at least one other mixing zone, continuing the mixing and agitation until sufficient bonding has occurred, then drying the agglomerates.

3,397,068
METHOD OF PACKAGING FRESH MEAT
Harold F. Schaefer, Concord, Calif., and Robert F. Westcott, Findlay, Ohio, assignors to The Dow Chemical Company, Midland, Mich., a corporation of Delaware
Continuation-in-part of application Ser. No. 323,316, Nov. 13, 1963. This application June 21, 1966, Ser. No. 567,795
2 Claims. (Cl. 99—174)

A plastic foam meat tray having a generally flat bottom wherein the cellular structure permits sufficient air inside the tray to come in contact with all surfaces of the meat product contained therein, even with the meat resting on the bottom, to maintain the red meat bloom for extended periods of time under normal con-

ditions of refrigeration. Such cellular structure also permits many meat products to be readily strippable from the flat bottom of the tray.

3,397,069
COHERENT SELF-SUSTAINING STICK OF SHIRRED AND COMPRESSED TUBULAR SAUSAGE CASING
Algimantas P. Urbutis, Chicago, Bernard H. Schenk, Hinsdale, Joseph J. Risany, La Grange Park, and Walter V. Marbach, Palos Heights, Ill., assignors to Union Carbide Corporation, a corporation of New York
Filed Dec. 15, 1964, Ser. No. 418,506
8 Claims. (Cl. 99—176)

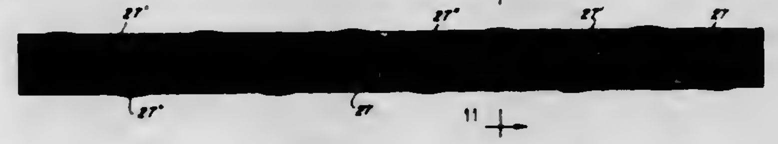

A method and apparatus are provided for uniformly compressing and compacting a length of flexible, tubular, sausage casing into a coherent, shirred casing stick which, from end to end, exhibits circumferential uniformity, is substantially straight and has an uninterrupted, uniform bore.

3,397,070
PROCESS FOR MAKING DEAD BURNED DOLOMITE
Robert A. Paul and Otto L. Forchheimer, York, Pa., assignors to The J. E. Baker Company, York, Pa., a corporation of Pennsylvania
Filed Apr. 12, 1966, Ser. No. 542,142
8 Claims. (Cl. 106—58)

A single step process for making dead burned dolomite brick grain by burning dolomite grain, sized related to that desired in the product grain, at a temperature of at least 3300° F. in a rotary kiln. A heat source in said kiln comprising a secondary fuel-air flame impinged upon a primary fuel-air flame to increase the flame temperature in substantially only the quadrant adjacent to the load. A dead burned dolomite grain with at least 98% MgO.CaO and having a hydration susceptibility of less than 5%.

3,397,071
PROTEIN BASE ADHESIVE COMPOSITIONS WITH IMPROVED WATER RESISTANCE
Herman Knieriem, Jr., Midland, Mich., assignor to The Dow Chemical Company, Midland, Mich., a corporation of Delaware
No Drawing. Original application Mar. 14, 1962, Ser. No. 179,764, now Patent No. 3,264,243, dated Aug. 2, 1966. Divided and this application Mar. 7, 1966, Ser. No. 554,229
4 Claims. (Cl. 106—154)

An adhesive composition comprised of a vegetable protein base adhesive and an amount sufficient to improve the water resistance of an alkyl aryl sulfonate having the formula

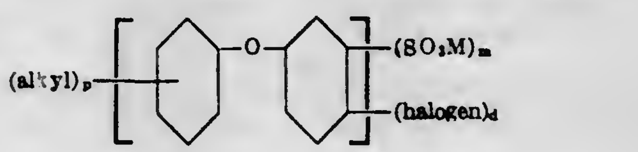

wherein the substituents have the meanings set forth below.

3,397,072
MAGNETIC RECORDING TAPE WITH AN ASYMMETRICALLY ORIENTED TEREPHTHALATE POLYMER SUPPORT
Francis Peter Alles, Westfield, N.J., assignor to E. I. du Pont de Nemours and Company, Wilmington, Del., a corporation of Delaware
Continuation-in-part of application Ser. No. 629,443, Dec. 20, 1956. This application Aug. 28, 1959, Ser. No. 836,602
6 Claims. (Cl. 117—7)

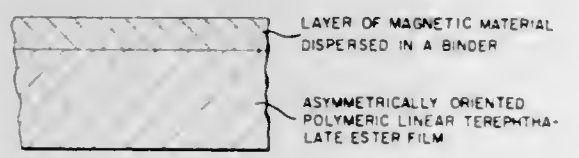

1. Magnetic recording tape comprising a thin layer of a magnetically susceptible material dispersed in a binder coated on a flexible support, said support comprising a polymeric linear terephthalate ester film which has been oriented to a greater extent in the longitudinal direction than in the transverse direction by stretching from 3.4× to 5.0× in the longitudinal direction and from 1.2× to 3.0× in the transverse direction.

3,397,073
SOOT-RESISTANT ROOFING GRANULES
Robert H. Fehner, St. Paul, Minn., assignor to Minnesota Mining and Manufacturing Company, St. Paul, Minn., a corporation of Delaware
Filed Dec. 11, 1963, Ser. No. 329,784
5 Claims. (Cl. 117—27)

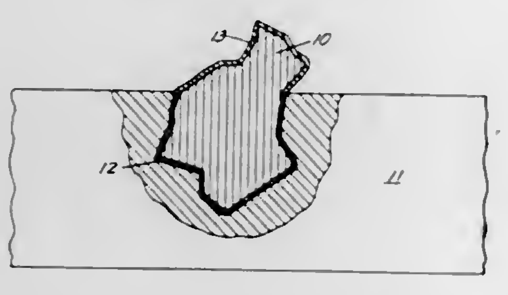

A new article of manufacture, a substrate, for example a mineral granule, treated or coated with an organophilic-hydrophobic organo-silicon compound characterized in that it becomes hydrophilic upon exposure to ultraviolet light. Color-coated roofing granules so treated form a firm bond in a bituminous roofing product, facilitated by the initial organophilic-hydrophobic character thereof. Upon exposure of the granule to sunlight and air, the visible portion of the granule changes to a hydrophilic character rendering it readily wet by water, thus permitting discoloring soot, dirt, and air pollutants to be easily washed away.

3,397,074
PRINTING ON POLYSTYRENE
Bohdan V. Burachinsky, Maplewood, N.J., and Yuash P. Jacob, Chicago, Ill., assignors to Interchemical Corporation, New York, N.Y., a corporation of Ohio
No Drawing. Filed Feb. 11, 1965, Ser. No. 432,009
7 Claims. (Cl. 117—38)

Method of printing on curved polystyrene surfaces using a typographic press to apply to the surface an ink comprising coloring matter in a vehicle of a copolymer of allyl alcohol and styrene dissolved in a solvent selected from the group of glycols and glycol ethers having a solubility parameter of from 8.8 to 10.0.

3,397,075
PROCESS OF VAPOR COATING NUCLEAR FUEL WITH BERYLLIUM OXIDE AND CARBON
Melvin F. Browning and Wilbur J. Wilson, Columbus, Ohio, assignors to the United States of America as represented by the United States Atomic Energy Commission
Filed Feb. 1, 1965, Ser. No. 429,689
2 Claims. (Cl. 117—46)

A process of coating nuclear fuel and blanket materials, such as uranium dioxide particles, comprising the steps of (1) converting a beryllium salt that forms beryllium oxide by hydrolysis, oxidation or pyrolysis in the vapor state to beryllium oxide at a temperature of 800–1500° C., (2) incorporating acetylene in the vapor and (3) contacting the nuclear fuel on blanket material with the vapor to yield a codeposit of beryllium oxide and 5 to 15 weight percent carbon.

3,397,076
SEMICRYSTALLIZED GROUND COATS AND ENAMELED ARTICLES MANUFACTURED THEREFROM
John R. Little, Fairport, and Elbert A. Sanford, Rochester, N.Y., assignors to Ritter Pfaudler Corporation, a corporation of New York
No Drawing. Filed Nov. 20, 1964, Ser. No. 412,865
4 Claims. (Cl. 117—70)

A lithium free crystallizable ground coat containing 35–65% SiO_2 and 12–45% BaO is deposited on a metal substrate and then fused. A crystallizable cover coat is then applied over the ground coat and fused. Finally the article is heat-treated to partially crystallize both coats in one step.

3,397,077
METAL FINISHING PROCESS AND COMPOSITION THEREFOR
Ernest R. Boller, Marion, and Gerald E. Snider, Muncie, Ind., assignors, by mesne assignments, to Ernest R. Boller, Detroit, Mich.
No Drawing. Filed May 14, 1963, Ser. No. 280,460
24 Claims. (Cl. 148—6.15)

18. A process for treating metal which comprises contacting said metal in an aqueous solution containing from about 1 to 75% by weight of an inorganic oxyacid selected from sulphuric, sulphamic, boric, phosphoric, nitric and mixtures thereof and from about 1 to 50% by weight of a water-soluble resin-forming material selected from the group consisting of amine-aldehyde, polyamine-polycarboxylic acid, polyhydric alcohol-polycarboxylic acid and copolymers thereof partially polymerized by heating in aqueous solution in the presence of said oxyacid and capable of forming a substantially water-insoluble resinous film upon the metal surface, said aqueous solution being capable of reacting at temperatures below 212° F. with the metal to be treated, contacting of said metal being carried out at a temperature below 212° F. for a time sufficient to effect reaction between said aqueous solution and metal to form a reaction product and to cause an interaction of said reaction product with said water-soluble resin-forming material to thereby deposit a water-insoluble resinous film on the metal surface, reacting a second reactable organic material with the resinous film on said metal surface to modify the nature of said film and finally drying said treated metal.

3,397,078
SILICON-CONTAINING DIFFUSION COATING FOR FERROUS METALS
William J. Anderson, Canoga Park, Calif., assignor to North American Rockwell Corporation, a corporation of Delaware
No Drawing. Filed June 24, 1964, Ser. No. 377,505
9 Claims. (Cl. 117—114)

A process for forming a silicon-containing diffusion coating on a ferrous or refractory base metal by placing the base metal in a molten sodium bath containing silicon dissolved therein, and further containing an active surface of zirconium in the bath. In certain preferred embodiments, both silicon and aluminum are dissolved in the molten sodium bath and codiffused into the base metal.

3,397,079
HEAT-SEALABLE POLYOLEFIN FILM COATED WITH A PLASTICIZED VINYLIDENE CHLORIDE COPOLYMER
Chauncey C. De Pugh, Levittown, Pa., and Ronald F. Snyder, Bordentown, N.J., assignors to Thiokol Chemical Corporation, Bristol, Pa., a corporation of Delaware
No Drawing. Filed Aug. 28, 1963, Ser. No. 305,193
6 Claims. (Cl. 117—122)

Oriented polyolefin films having at least one surface coated with a coating composition which has a softening point lower than that of the polyolefin film and which consists essentially of (i) from about 80 to 99 percent by weight of a vinylidene chloride copolymer derived from the interpolymerization of 75 to 95 mole percent of vinylidene chloride and 5 to 25 mole percent of an α,β-unsaturated carboxylic acid, and (ii) from 1 to 20 percent by weight of a plasticizer for the vinylidene chloride copolymer, may be heat-sealed without substantially altering the molecular orientation of the polyolefin in such films.

3,397,080
PROTECTIVE CERAMIC COATING
Roland T. Girard, Scotia, and Chester T. Sims, Ballston Lake, N.Y., and Harriet R. Wisely, Kennewick, Wash., assignors to General Electric Company, a corporation of New York
No Drawing. Filed Dec. 28, 1964, Ser. No. 421,629
11 Claims. (Cl. 117—129)

1. A manufacture comprising a body of high temperature metal having a surface and a substantially continuous, applied coating layer bonded to said surface, the constituents of said coating layer being selected from the group consisting of lithium titanate, and lithium titanate and an oxide selected from the group consisting of the oxides of magnesium, iron, nickel, cobalt, manganese, zinc and aluminum, wherein the weight percent of lithium titanate in said coating layer exceeds about 47 percent, and said coating layer having a coefficient of thermal expansion closely matching the coefficient of thermal expansion of said body of metal.

3,397,081
ANTIOXIDANT-CONTAINING TEXTILE LUBRICANT, PROCESS FOR PREPARING NYLON TIRE CORD THEREWITH AND THE RESULTING CORD
Thomas C. Mayberry, Wilmington, Del., assignor to E. I. du Pont de Nemours and Company, Wilmington, Del., a corporation of Delaware
No Drawing. Filed Sept. 11, 1964, Ser. No. 395,887
5 Claims. (Cl. 117—139.5)

A textile lubricating composition consisting of about 2 weight percent of the low temperature reaction product of diphenylamine and acetone having a melting point of 85 to 95° C., about 5 to 30 weight percent of a penta- to septa-ester of a fatty acid having 12 to 16 carbon atoms in its chain and a condensation product of one mol of sorbitol and 30 to 40 mols of ethylene oxide, and the remainder coconut oil.

3,397,082
PAPERBOARD BASE IMPREGNATED WITH PITCH OR A BLEND OF PITCH AND HYDROCARBON POLYMER RESIN
John Podlipnik, Palos Heights, Ill., and Theodore J. Karr, Gary, and Eugene M. Fauber, Hammond, Ind., assignors to Sinclair Research, Inc., New York, N.Y., a corporation of Delaware
No Drawing. Continuation-in-part of application Ser. No. 343,447, Feb. 10, 1964. This application Apr. 4, 1967, Ser. No. 628,287
10 Claims. (Cl. 117—158)

Paperboard is impregnated with mineral oil-derived pitch having a maximum needle penetration at 77° F. of about 125 and preferably between about 30 and 80. This impregnant may be obtained by solvent extraction alone or followed by blowing of clarified oil, that is, the bottoms produced from the catalytic cracking of mineral gas oil. The pitch product may also be blended with about 5–35 percent of a hydrocarbon polymer resin. The impregnated paperboard possesses improved wet and dry strength without leaving residual surface hydrocarbon.

3,397,083
INSULATOR BODY HAVING AN ELECTRICALLY CONDUCTIVE SURFACE AND METHOD
Milton E. Poland, Royal Oak, Mich., assignor to Champion Spark Plug Company, Toledo, Ohio, a corporation of Delaware
Filed Apr. 14, 1965, Ser. No. 448,188
11 Claims. (Cl. 117—201)

A method of producing an electrically conductive surface on an insulator body consisting principally of alumina which includes the steps of applying to a surface of the insulator a coating of a copper oxide containing composition capable of forming an electrically semiconducting on the insulator, the composition including at least about 3 percent of an oxide of chromium, the amount of the oxide being sufficient to stabilize the surface resistance of the coating upon firing to temperatures above approximately 2400° F., and firing the insulator and coating to a temperature above approximately 2400° F., but not sufficiently high that the surface resistance of the coating is appreciably higher than the surface resistance of the coating fired to maturation, and for a time sufficiently short that, adjacent the original insulator surface and immediately therebelow there is a copper rich electrically semiconductive region which is substantially devoid of free alumina. Also disclosed is an insulator body produced in accordance with the above method.

3,397,084
METHOD FOR PRODUCING SUPERCONDUCTIVE LAYERS
Walter Krieglstein, Rosstal, Germany, assignor to Siemens Aktiengesellschaft, Erlangen, Germany, a corporation of Germany
Filed Oct. 20, 1965, Ser. No. 498,238
Claims priority, application Germany, Dec. 12, 1964, S 94,596
13 Claims. (Cl. 117—217)

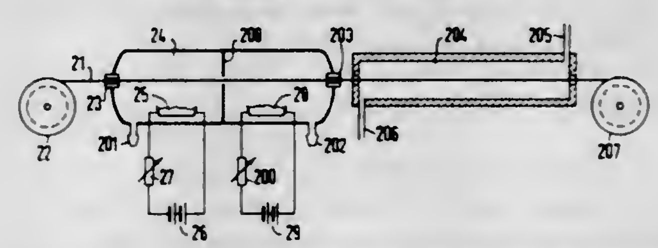

1. A method for producing a layer of a two-component superconductive intermetallic compound on a substrate

structure comprising the higher melting component of said compound which comprises the steps of depositing a layer of the lower melting component of said compound on said substrate, depositing a layer of a cover metal on said lower melting component, said last named metal having a melting point which is higher than the diffusion temperature necessary to form said intermetallic compound from said two components and which does not tend to alloy with or form a compound with said lower melting component at said diffusion temperature, and heating said coated substrate structure at a temperature under inert conditions in which said lower melting component diffuses into said substrate component to form said intermetallic compound layer on said substrate.

3,397,085
THIN FILM CAPACITORS
Frank E. Cariou, Cleveland, Ohio, William E. Loeb, Martinsville, N.J., and David J. Valley, Cleveland, Ohio, assignors to Union Carbide Corporation, a corporation of New York
Continuation of application Ser. No. 247,557, Dec. 27, 1962. This application Aug. 17, 1966, Ser. No. 573,129
24 Claims. (Cl. 117—217)

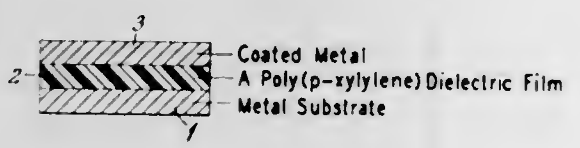

Invention provides a process for producing insulated metal articles and electrical capacitors by condensing on a conductive metal layer a reactive p-xylylene diradical thereby forming a film of poly-p-xylylene over the metal surface. Successive layers can be built up by lamination or metal vapor deposition techniques to yield insulated metal articles or for making rolled foil capacitors.

3,397,086
PHOTOCONDUCTIVE COMPOSITION AND COATED ARTICLE
John J. Bartfai, Schenectady, N.Y., assignor to General Electric Company, a corporation of New York
No Drawing. Filed Mar. 12, 1965, Ser. No. 439,467
8 Claims. (Cl. 117—218)
A photoconductive composition comprising a substantially non-photoconductive organic polymer containing a dispersion of photoconductive pigment which is phthalocyanine or its metal derivatives.

3,397,087
METHOD OF COATING A SHAPED CARBON ARTICLE WITH A POLYCARBON FLUORIDE
Shiro Yoshizawa, Sakyo-ku, Kyoto, and Nobuatsu Watanabe, Ukyo-ku, Kyoto, Japan, assignors to Nippon Carbon Co., Ltd., Tokyo, Japan
No Drawing. Filed Feb. 3, 1964, Ser. No. 342,282
Claims priority, application Japan, June 27, 1963, 38/32,976, 38/32,977
1 Claim. (Cl. 117—228)
A shaped carbon article is provided with a surface coating of a polycarbon fluoride containing carbon and fluorine atoms in an essentially 1:1 ratio with the atoms bonded by covalent chemical bonds, by reacting said carbon article with fluorine or a fluorine liberating compound in a nickel plated container at a temperature of about 100°-550° C. for about 30 minutes to about 4 hours. The resulting product has excellent chemical resistance, water repellent, oil-repellent, heat resistance, and lubricating properties.

3,397,088
WITHDRAWN

3,397,089
STORAGE BATTERY WITH TRANSPARENT COVER HAVING CONNECTORS IN CHANNELS
Ryusuke Sasagawa, Yoshio Fujiwara, Takashi Kosuge, and Ichiro Sano, Kanagawa, Japan, assignors to Furukawa Denchi Kabushiki Kaisha, Kanagawa, Japan, a corporation of Japan
Filed Mar. 8, 1966, Ser. No. 532,777
Claims priority, application Japan, Aug. 16, 1965, 40/66,886
4 Claims. (Cl. 136—170)

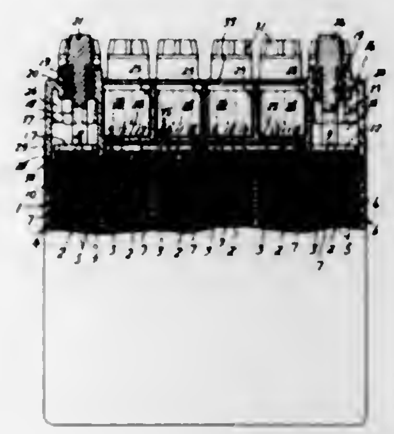

A storage battery including a container and cover which matingly cooperate to define a plurality of sealingly insulated plate group compartments. The undersurface of the cover includes a pair of longitudinally extending grooves which receive the connector straps connecting extending ear portions of the proper alternately disposed negative and positive plates of the respective plate groups. The cover also includes channel-like grooves along the partitions which define the plate group compartments and also along the side walls defining the cover. All such side wall and partition channel-like grooves communicate with the longitudinally extending grooves which house the connector straps whereby insulating filler such as an epoxy resin will embed the connector straps and ear portions of the plate groups while at the same time insulatingly secure the respective compartments from each other and aid in securing the cover to the base container.

3,397,090
METAL-COATING COMPOSITION AND PROCESS
Ashok J. Champaneria, Detroit, and William S. Russell, Warren, Mich., assignors to Hooker Chemical Corporation, Niagara Falls, N.Y., a corporation of New York
No Drawing. Filed Nov. 10, 1964, Ser. No. 410,294
16 Claims. (Cl. 148—6.2)
A composition for forming a protective coating on aluminum-containing surfaces which consists essentially of an aqueous acidic solution containing hexavalent chromium ions, fluoride ions, and from about 0.01 to 0.4% vanadium, as an activator for the composition.

3,397,091
METHOD FOR FORMING IMPROVED COATINGS ON METAL
William S. Russell, Warren, Mich., assignor to Hooker Chemical Corporation, Niagara Falls, N.Y., a corporation of New York
No Drawing. Filed Mar. 9, 1965, Ser. No. 438,396
15 Claims. (Cl. 148—6.2)
A method for forming a protective coating on zinc-containing surfaces wherein a clean, zinciferous surface is coated with an aqueous acidic solution which contains hexavalent chromium ions, fluoride ions, and from 0.01 to 0.1% by weight of the aqueous solution of arsenic ions. After the zinc metal surface has been contacted with the solution for a period sufficient to form the desired coating thereon, the thus-coated surface is then rinsed with an aqueous solution containing hexavalent chromium ions.

3,397,092
CORROSION-RESISTANT COATINGS
Walter R. Cavanagh, Detroit, Mich., assignor to Hooker Chemical Corporation, Niagara Falls, N.Y., a corporation of New York
No Drawing. Filed Feb. 27, 1964, Ser. No. 347,710
8 Claims. (Cl. 148—6.16)
A process for imparting improved corrosion resistance to case hardened ferrous metal surfaces wherein the case hardened ferrous metal surface is heated to a temperature within the range of about 300 to 750 degrees F. for 15 minutes to 3 hours and any oleaginous materials are removed from the metal surface. Thereafter, a protective phosphate coating is applied to the heat treated metal surface. The removal of oleaginous materials from the metal surface, prior to the application of the protective phosphate coating may be effected simultaneously with the heat treatment, by using a sufficiently high heating temperature, or as a separate cleaning step either prior or subsequent to the heat treatment.

3,397,093
TREATMENT OF METAL SURFACES
Anthony J. Oswald, Addlestone, Surrey, and Dennis Brian Freeman, Harrow, Middlesex, England, assignors to Hooker Chemical Corporation, Niagara Falls, N.Y., a corporation of New York
No Drawing. Filed May 19, 1964, Ser. No. 368,738
9 Claims. (Cl. 148—6.16)
A process for treating metal surfaces wherein the surface is contacted with an aqueous acidic phosphate coating solution containing at least one additive selected from the group consisting of nonionic surface active agents and emulsified organic solvents, said contact being sufficient to effect cleaning of the surface, and thereafter, without an intervening water rinse, the thus-cleaned surface is contacted with a second aqueous acidic phosphate coating solution, which solution is substantially free of the aforesaid additives, until a phosphate coating is formed on the surface.

3,397,094
METHOD OF CHANGING THE CONDUCTIVITY OF VAPOR DEPOSITED GALLIUM ARSENIDE BY THE INTRODUCTION OF WATER INTO THE VAPOR DEPOSITION ATMOSPHERE
James E. Webb, Administrator of the National Aeronautics and Space Administration, with respect to an invention of Sidney G. Ellis, Princeton, N.J.
Filed Mar. 25, 1965, Ser. No. 442,835
7 Claims. (Cl. 148—174)
A continuous method of forming a junction by chemical transport is disclosed by vaporizing a semiconductor source compound such as gallium arsenide and an impurity such as zinc. The gallium is transported to a heated substrate as a vaporous chemical transport compound in a carrier gas such as hydrogen by reaction with a chemical reagent such as water to form a gallium oxide. The gallium oxide combines with arsenic at the substrate surface to form a zinc doped epitaxial layer of gallium

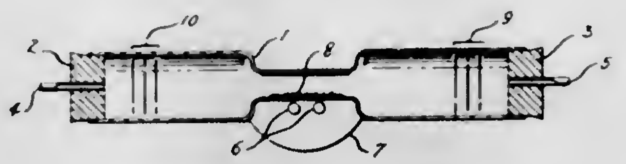

arsenide of first type of conductivity. A second layer of different conductivity is epitaxially grown to form a junction by changing the temperature of the substrate or by changing the water content of the carrier gas to a selected level.

3,397,095
GELLED AQUEOUS EXPLOSIVE COMPOSITION HAVING HYDROGEN CYANAMIDE AS ANTI-FREEZING AGENT
John Patrick Merryweather and John Aubrey McLean, Niagara Falls, Ontario, and Trevor David Field, Chippawa, Ontario, Canada, assignors to American Cyanamid Company, Stamford, Conn., a corporation of Maine
No Drawing. Filed Dec. 14, 1966, Ser. No. 601,563
9 Claims. (Cl. 149—39)
Anti-freeze properties are provided in water-base, ammonium nitrate explosive gel compositions by the incorporation therein of a small amount of hydrogen cyanamide and especially by the incorporation of small amounts of both hydrogen cyanamide and urea.

3,397,096
THICKENED INORGANIC OXIDIZER SALT EXPLOSIVE SLURRY SENSITIZED WITH A SOLUBLE POLYFLAVONOID
Errol Linton Falconer, St. Hilaire, Quebec, and Cornelius James Noel Kelly, Beloeil, Quebec, Canada, assignors to Canadian Industries Limited, Montreal, Quebec, Canada
No Drawing. Filed Nov. 20, 1967, Ser. No. 684,538
Claims priority, application Canada, Dec. 6, 1966, 977,354
8 Claims. (Cl. 149—39)
The sensitivity of slurry explosive compositions comprising inorganic oxygen-supplying salts, a fuel, a thickener and a liquid carrier is substantially improved by incorporating in the composition a soluble polyflavonoid and a common solvent for the polyflavonoid and the inorganic salt.

3,397,097
THICKENED AQUEOUS INORGANIC OXIDIZER SALT BLASTING COMPOSITIONS CONTAINING GAS BUBBLES AND A CRYSTAL HABIT MODIFIER AND METHOD OF PREPARATION
Erdem M. Atadan, Wilmington, Del., and Charles H. Noren, Hagerstown, Md., assignors to E. I. du Pont de Nemours and Company, Wilmington, Del., a corporation of Delaware
No Drawing. Filed July 12, 1966, Ser. No. 564,526
10 Claims. (Cl. 149—46)
Water-bearing explosive compositions based on inorganic oxidizing salt and nonexplosive fuel containing the combination of soluble carbonaceous fuel, surfactant and small gas-filled cavities.

3,397,098
METHOD OF MAKING INSULATING BODIES
Hans Felix, Olten, Switzerland, assignor to Moser-Glaser & Co. A.G., Muttenz, near Basel, Switzerland
Original application Mar. 15, 1962, Ser. No. 179,946, now Patent No. 3,250,850, dated May 10, 1966. Divided and this application Feb. 14, 1964, Ser. No. 344,988
Claims priority, application Switzerland, Feb. 17, 1961, 1,977/61; Mar. 16, 1961, 3,160/61
5 Claims. (Cl. 156—48)

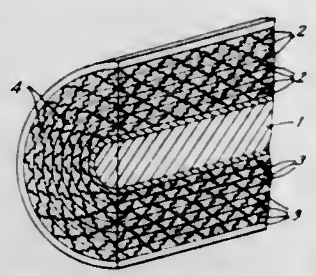

A unitary, insulated portion of an electrical apparatus is formed by arranging about an elongated electrically conductive member, coaxially therewith, a plurality of superposed continuous first layers of insulating material and of continuous second layers alternating with the first layers, the first layers having a plurality of spaced projections which extend toward a contact adjacent second layers so that adjacent convolutions of the second layers are completely separated from each other by intervening convolutions of the first layers and intermeshing of adjacent convolutions of the first layers is prevented and, due to the spaced projections of the first layers, the intervening spaces between adjacent convolutions of the second layers, and the space adjacent the conductive member, are divided into a plurality of passages. The thus-formed structure is then subjected to a partial vacuum in order to be dried and degassed, and thereafter the passages are filled with a flowable hardenable casting resin while the partial vacuum is still maintained, followed by hardening of the casting resin which fills the pasasges.

3,397,099
METHOD AND APPARATUS FOR REBUILDING TIRES
Carlton Keith Barefoot, Muncie, Ind., assignor to Bacon American Corporation, Muncie, Ind., a corporation of Indiana
Continuation-in-part of abandoned application Ser. No. 313,806, Oct. 4, 1963. This application Aug. 24, 1964, Ser. No. 393,001
13 Claims. (Cl. 156—96)

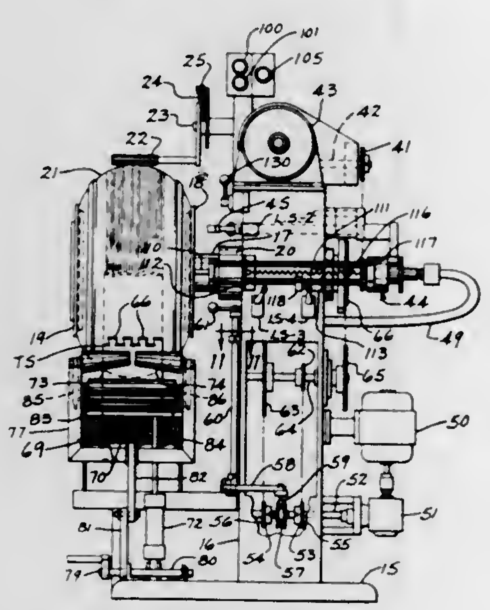

Tires are recapped by spreading the beads of a prepared tire carcass or body to reduce the circumference to a particular dimension and by pre-cutting the tread stock to the same dimension. The tread stock is then applied to the carcass, fitting exactly therewith, without need for further cutting of the tread stock. The tire, after vulcanizing, has a more uniform tread thickness and is of higher, more uniform quality.

3,397,100
PATCH PROCESS
John A. Christie, Akron, Ohio, assignor to The Technical Rubber Co., Johnstown, Ohio, a corporation of Ohio
Filed June 24, 1965, Ser. No. 466,545
3 Claims. (Cl. 156—97)

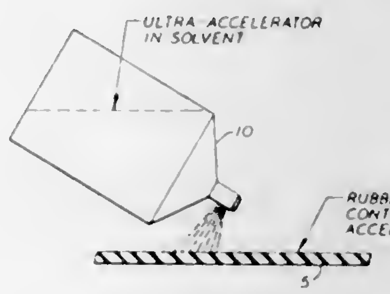

A thin patch of compounded rubber is adhered to a heated tire or tube or the like which has been treated with a solvent and an ultra-accelerator.

3,397,101
METHOD OF IMPROVING THE HEAT SEALING QUALITIES OF THERMOPLASTIC FILM ORIENTED BY STRETCHING
Gad Anders Rausing, Lund, Sweden, assignor to AB Tetra Pak, Lund, Sweden, a Swedish company
No Drawing. Filed July 22, 1963, Ser. No. 296,483
Claims priority, application Sweden, July 25, 1962, 8,204/62
1 Claim. (Cl. 156—229)

1. The method of making a thermoplastic film suitable for packaging and like purposes by laminating a layer of polypropylene with a relatively thin layer of polyethylene wherein the polypropylene layer has a higher melting point than the polyethylene layer which comprises the steps of extruding a hot layer of the polypropylene material onto a premanufactured nonheated film of the polyethylene material, the surface of said film of polyethylene material being heated to sealing temperature with said extruded layer of polypropylene material by the heat within the latter, cooling the resulting laminate and thereafter stretching said laminate in the cooled state to effect orientation thereof and to simultaneously reduce the thickness of the polyethylene layer.

3,397,102
METHOD OF MAKING GUIDING MEANS FOR MACHINE CARRIAGES
Willy Schraub, Beckrath-Wickrath (Niers), Germany, assignor to Scharmann & Co., Rheydt, Rhineland, Germany
Original application Mar. 23, 1964, Ser. No. 353,769, now Patent No. 3,311,425, dated Mar. 28, 1967. Divided and this application Dec. 1, 1966, Ser. No. 598,415
Claims priority, application Germany, July 5, 1963, Sch 33,584
4 Claims. (Cl. 156—257)

A method of providing a planar portion of a supporting and guiding member with a planar guiding surface for supporting and guiding the movement of a movable member which includes the steps of forming grooves along the said planar portion of said guiding member parallel to the length of the band and on opposite sides of said central portion of the band, but inwardly from the side edges of said band, placing an adhesive in said grooves in an amount in excess of the capacity of the grooves so that the adhesive protrudes from the top of the grooves, and

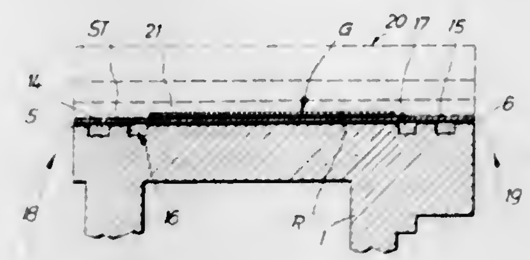

displacing the adhesive laterally of the grooves by pressing said band on said planar portion of said guiding member.

3,397,103
CHLOROTRIFLUOROETHYLENE COPOLYMER SOLVENT SYSTEMS
Julian H. Kushnick, Brooklyn, N.Y., and Whitney H. Mears, Morris Plains, and Edward S. Jones, Hanover Township, Morris County, N.J., assignors to Allied Chemical Corporation, New York, N.Y., a corporation of New York
No Drawing. Filed Apr. 21, 1964, Ser. No. 361,567
16 Claims. (Cl. 156—307)

Chlorotrifluoroethylene-vinylidene fluoride copolymers and chlorotrifluoroethylene - vinylidene fluoride - tetrafluoroethylene terpolymers are dissolved in hexafluorobenzene to form solutions which are adapted for casting unsupported films and coatings.

3,397,104
APPARATUS FOR FORMING A LAMINATED BELT OF PLURAL PLIES OF BELT MATERIAL
Victor H. Hasselquist, Akron, Ohio, assignor to The B. F. Goodrich Company, New York, N.Y., a corporation of New York
Filed Dec. 18, 1964, Ser. No. 419,434
8 Claims. (Cl. 156—351)

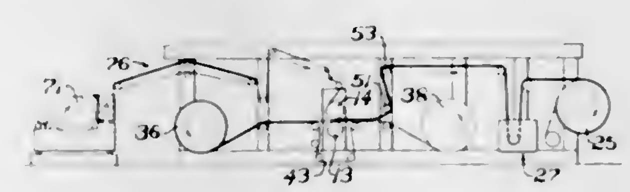

An apparatus for making laminated belts wherein a captive liner shuttles back and forth between spaced storage rolls carrying the belt under construction therewith wherein the liner delivers the belt under construction for passage between laminating rolls which laminates additional ply or plies to the belt under construction. Supply fabric for the belt under construction is fed continuously towards the laminating rolls and its direction of feed to the laminating rolls is changed in accordance to the direction in which the liner moves. The liner does not pass between the laminating rolls.

3,397,105
TAPE FUSING DEVICE
Masaho Takami, 1–15 Aza Kitaura, Nishi Tomatsu, Amagasaki, Hyogo Prefecture, Japan
Filed Mar. 30, 1966, Ser. No. 538,860
Claims priority, application Japan, Apr. 24, 1965, 40/24,628; Sept. 22, 1965, 40/58,284, 40/77,754
5 Claims. (Cl. 156—494)

1. A tape fusing device for the packing tape compressing machine consisting of an upward blade-shaped cutting heater to support the lower surface of the end of the tape placed thereupon, an elevating body to cut off the tape placed on the said heater by pressing it down taking advantage of the elastic force of a spring, a handle reciprocating in connection with the rising or falling move-

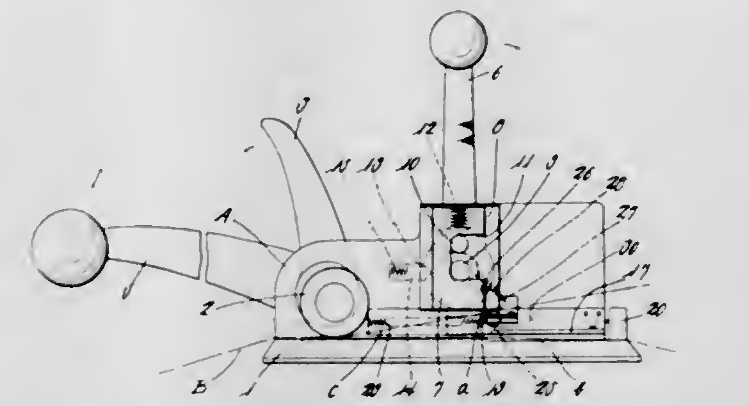

ment of the said elevating body, and a fusing heater which, simultaneously with the descent of the elevating body cutting off the end of the tape, proceeds between the two overlapping ends of the tapes and retreat after melting both the upper and lower opposite faces of the ends of the tape.

3,397,106
MICROCELLULAR LAMINATE
Walter William Moseley, Jr., Wilmington, Del., assignor to E. I. du Pont de Nemours and Company, Wilmington, Del., a corporation of Delaware
Filed Sept. 16, 1964, Ser. No. 396,891
9 Claims. (Cl. 161—55)

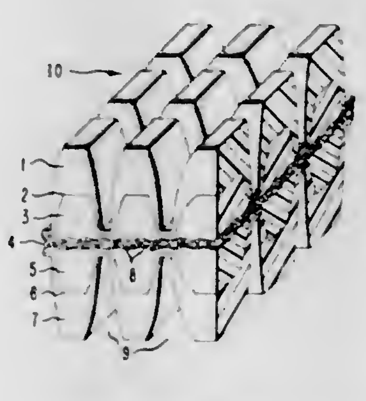

A fabric-like laminated sheet comprising plural layers of microcellular sheet material bonded to one another with an adhesive containing a dense, particulate filler material.

3,397,107
COMPOSITE POLYAMIDE FILAMENTS WITH IMPROVED POTENTIAL CRIMPABILITY AND METHOD OF MAKING THE SAME
Isao Kimura, Osaka-shi, Japan, assignor to Kanegafuchi Boseki Kabushiki Kaisha, Tokyo, Japan
No Drawing. Filed July 22, 1965, Ser. No. 474,182
14 Claims. (Cl. 161—173)

1. A composite polyamide filament with an improved potential crimpability consisting of two continuous adherent eccentrically arranged components of synthetic linear polyamides, in which one component consists essentially of a homopolyamide and the other component consists essentially of a copolyamide of a bifunctional polyamide-forming constituent containing in its main molecular chain atoms from Group VI of the periodic system having an atomic number not more than 16 and at least one substance selected from the group consisting of ϵ-caprolactam and hexamethylenediammonium-adipate.

3,397,108
DEGLOSSED POLYVINYL FLUORIDE FILM STRUCTURES
James Lee Hecht and Jacob David Polejes, Williamsville, N.Y., assignors to E. I. du Pont de Nemours and Company, Wilmington, Del., a corporation of Delaware
No Drawing. Filed Feb. 17, 1965, Ser. No. 433,509
11 Claims. (Cl. 161—189)

A deglossed polyvinyl fluoride film having substantially high transparency is provided. The polyvinyl fluoride film contains from 1% to 5% by weight, based upon the weight of polyvinyl fluoride, of inert, inorganic particulate material such as silica having a substantially uniform particle diameter of between about 2 and 20 microns, and at least about 0.5% by weight, based upon the weight of polyvinyl fluoride, of a wetting agent such as a phosphate ester.

3,397,109
ALKALI PRETREATMENT IN SULFATE PROCESS TO PREVENT MALODORS
Erik Oman, Stocksund, Sweden, assignor to Skogsagarnas Industri Aktiebolag, Vaxjo, Sweden, a corporation of Sweden
No Drawing. Continuation-in-part of application Ser. No. 261,213, Feb. 26, 1963. This application May 23, 1967, Ser. No. 640,501
8 Claims. (Cl. 162—37)

A method of preventing the formation of malodorous sulphurous substances in the production of sulphate cellulose by digestion of cellulosic fiber material with alkali and sulphide. The method of the invention includes the step of pre-treating the fiber material with a solution of alkaline hydroxide so that the alkaline hydroxide reacts with —CH_3 groups of the cellulosic fiber material so as to bind the —CH_3 groups which form malodorous compounds in a conventional sulphate digestion process. The thus pre-treated fiber material is then digested in a sulphate digestion process.

3,397,110
CLEANING OF HEAT EXCHANGERS USED WITH CELLULOSE DIGESTERS
Curt F. Rosenblad, % Rosenblad Corp., P.O. Box 585, Princeton, N.J. 08540
Filed Mar. 8, 1965, Ser. No. 437,890
10 Claims. (Cl. 162—42)

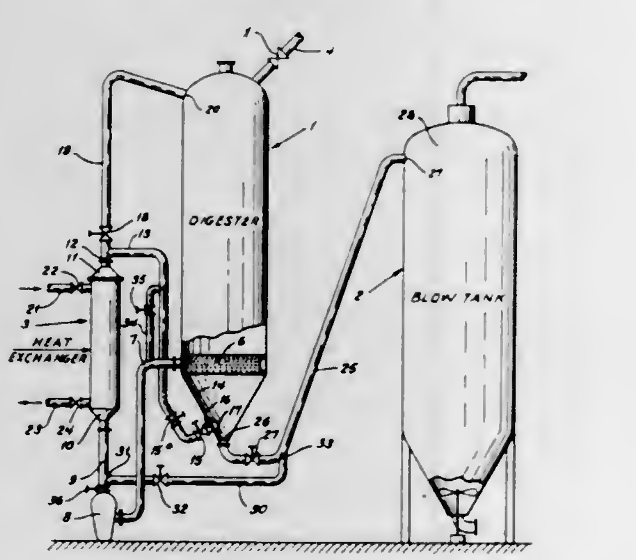

1. The method of cleaning the walls bordering the liquor passages of an indirect heat exchanger utilized for the heating of cooking liquor for a digester by causing said liquor to flow in one direction through said passages which comprises, terminating the flow of said liquor in said one direction at substantially the end of a cook, then withdrawing heated cooking liquor under pressure from said digester and passing such cooking liquor through said liquor passages in reverse direction to the flow of liquor through said passages during the heating of said liquor for cooking.

3,397,111
CLEANING APPARATUS FOR PAPER MACHINE PRESS FELTS
Edward N. Rickert, Jr., Portland, Oreg., assignor to Monarch Forge and Machine Works, Inc., Portland, Oreg., a corporation of Oregon
Filed Apr. 26, 1965, Ser. No. 450,687
9 Claims. (Cl. 162—279)

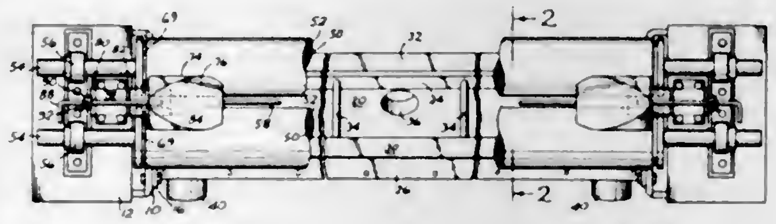

A vacuum chamber has an open top partially closed by a pair of spaced rolls over which a paper machine press felt is moved for drying. A first seal is provided between the ends of the rolls and chamber, and a second, adjustable seal is provided between the spaced rolls at the end portions thereof for accommodating press felts of varying width. A baffle between the rolls directs water from the felt into the chamber.

3,397,112
CYLINDER PAPERMAKING MACHINE CONTAINING A WATER IMPERVIOUS CYLINDER
Allan Peter Highton and John Brian Wheeldon, Kent, England, assignors, by mesne assignments, to Bowaters United Kingdom Paper Company Limited
Filed Apr. 30, 1964, Ser. No. 363,952
Claims priority, application Great Britain, May 6, 1963, 17,794/63
5 Claims. (Cl. 162—318)

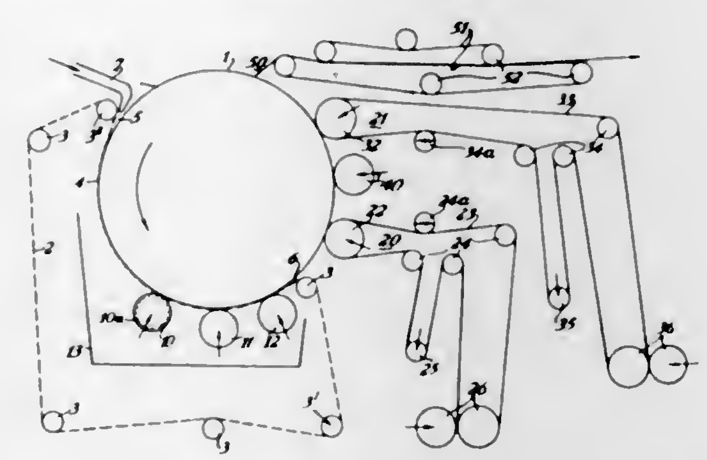

1. Apparatus for making a fibrous web, such as paper, in a continuous manner, comprising a cylinder having a liquid impervious surface, rotatable about a horizontal axis, an endless, liquid pervious band entrained around a portion of the cylinder surface and movable therewith, at least one felted press roller adjacent the cylinder surface at a location circumferentially spaced beyond said endless band in the direction of rotation of the cylinder, means for continuously depositing fibrous stock between the band and the cylinder surface whereby it is confined therebetween, means for extracting, through the band, stock liquid from the fibrous stock whilst so confined thereby to form a fibrous web and means for stripping the fibrous web from the cylinder surface after passing through the nip of the cylinder and at least one felted press roller.

3,397,113
MODULAR SUPPRESSION TANKS FOR NUCLEAR CONTAINMENT STRUCTURES
Donald C. Stafford, Hinsdale, Ill., assignor to Chicago Bridge & Iron Company, Oak Brook, Ill., a corporation of Illinois
Filed May 10, 1966, Ser. No. 549,059
4 Claims. (Cl. 176—37)

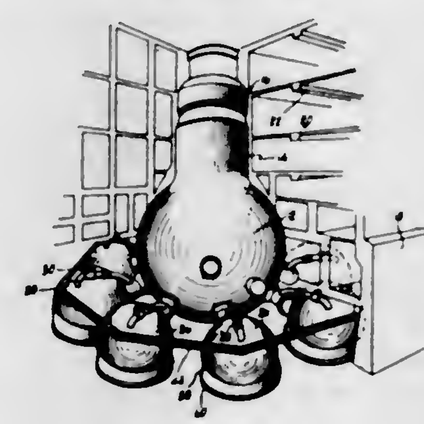

A nuclear reactor containment system in which a number of suppression tanks are spaced about and separated from the drywell vessel. A series of vent tubes interconnect the drywell vessel with each individual tank, the tube being supported in the tank by an inside girder and rod structure, with the girder also serving to stiffen the tank for emplacement on a supporting structure.

3,397,114
INTEGRAL NUCLEAR REACTOR-HEAT EXCHANGER ARRANGEMENT
Thomas Deighton, London, England, assignor to Babcock & Wilcox, Limited, London, England, a corporation of Great Britain
Filed July 5, 1966, Ser. No. 562,626
10 Claims. (Cl. 176—54)

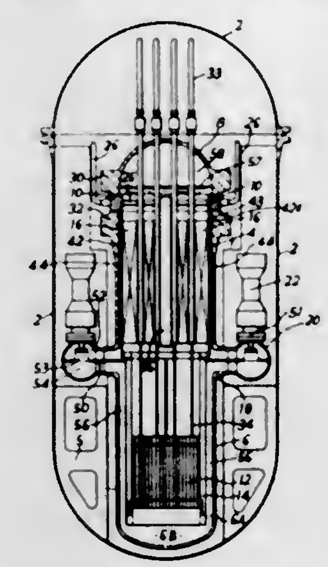

An integral nuclear reactor for marine service comprising an upright closed pressure vessel having a substantially cylindrically shaped body portion and removable end portion. The vessel, which houses the reactor core and heat exchanger, is adapted to have a primary coolant circulated through the core. Heat generated by the core is transferred to secondary coolant passing through the heat exchanger. The secondary coolant passes from outside the vessel into the heat exchanger via a ring header coaxially disposed intermediate the end and body portions. The ring has a stepped cross-section to accommodate lateral thrust problematic to marine reactors. Conduits passing through openings formed radially of the ring conduct secondary coolant into the reactor vessel for flow through the heat exchanger and out of the vessel after flowing through the exchanger.

3,397,115
EXTRACTION APPARATUS
Stephen W. Tobey, Sudbury, Mass., assignor to The Dow Chemical Company, Midland, Mich., a corporation of Delaware
Filed Aug. 7, 1967, Ser. No. 658,800
13 Claims. (Cl. 202—169)

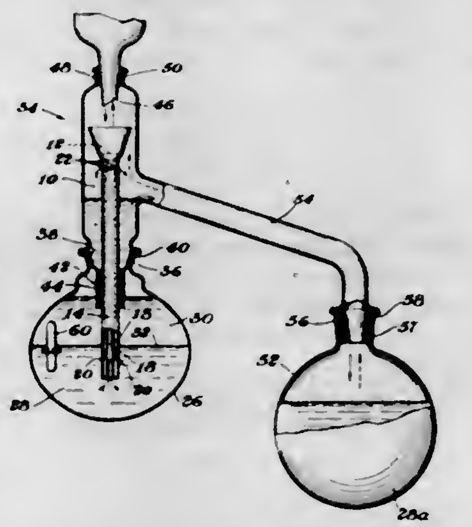

This invention relates generally to extraction apparatus. More specifically, it concerns a solvent distributor tube which may be used in conjunction with an extraction apparatus unit comprising generally an extraction flask, a reboiler flask and an extractor head connecting both flasks. The distributor tube of this invention generally resembles a long stem funnel, with the stem portion comprising inner and outer tube portions joined at one end to define a chamber therebetween. The funnel portion of the tube opposite the joined ends communicates directly with the inner tube portion and is integral with the outer tube portion. The distributor tube is seated within the extractor head and provides communication between the extraction flask and the reboiler flask through ports located at opposite ends of the outer tube portion.

3,397,116
DISTILLATION AND CONDENSATION SYSTEM FOR CONVERTING SALT WATER TO FRESH WATER
William L. Bourland, North Highlands, Calif. (6350 Everest Way, Sacramento, Calif. 95842)
Continuation-in-part of application Ser. No. 544,013, Apr. 20, 1966. This application Apr. 21, 1967, Ser. No. 632,693
14 Claims. (Cl. 202—177)

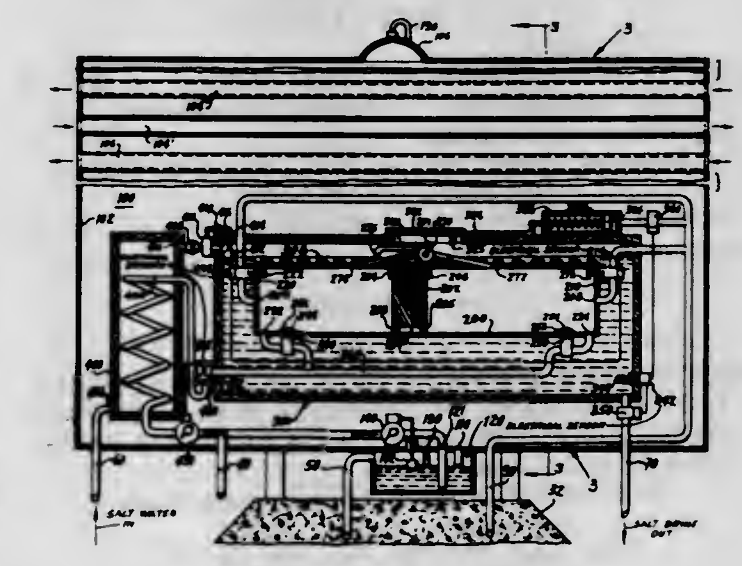

A condensation system and method for the production of fresh water from salt water and the like which includes an outer vessel which is cooled to condense and collect

vapors, a salt water containing vessel therein, a cylinder with a freely slidable piston inside the salt water containing vessel and electrical and fluid interconnection systems for supplying steam to the inside cylinder for moving the piston reciprocably therein and condensing the steam and thereby transferring the latent heat evaporization to the salt water to produce vapor therefrom which is condensed and collected in the outer vessel and conduit systems for the recovery of fresh water at all stages of one or more such systems is disclosed.

3,397,117
COMPACT SOLAR STILL
Robert W. Smith, Oakton, Louis P. Glekas, Annandale, John E. Riley, Vienna, and Robert L. Swingle, Woodbridge, Va., assignors, by mesne assignments, to the United States of America as represented by the Administrator of the National Aeronautics and Space Administration
Filed June 13, 1966, Ser. No. 557,016
10 Claims. (Cl. 202—234)

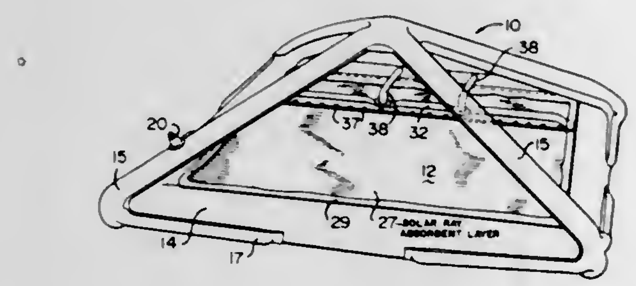

A solar still for converting saline or brackish water to potable water has an inflatable frame which includes an inflatable mattress base with integral inflatable ribs extending in pyramidal configuration from the corners of the mattress to a common junction above approximately the center of the mattresses. A solar radiation transparent envelope is disposed about, and when the frame is in its inflated condition, is supported by the frame. The envelope provides, at the underside of the mattress, a lower collection basin for the condensate which forms on the inner surface of the envelope as solar radiation penetrating the transparent walls of the envelope beats a black radiation-absorbing evaporator layer to which the water to be distilled is fed from a pouch or bag in a wall of the envelope.

3,397,118
PURIFICATION OF CHLOROANILINES BY VACUUM DISTILLATION WITH A CHROMATE
Robert D. Gano, Wilmington, Del., assignor to E. I. du Pont de Nemours and Company, Wilmington, Del., a corporation of Delaware
No Drawing. Filed May 4, 1967, Ser. No. 635,996
4 Claims. (Cl. 203—6)

Vacuum distillation of chloroanilines with 0.3 to 2.0 weight percent alkali metal chromate or dichromate.

3,397,119
SALT WATER DISTILLATION AND CONDENSATION UTILIZING ALTERNATE STEAM EXPANSION-COMPRESSION HEAT CYCLE TO EVAPORATE SALT WATER
William L. Bourland, 6350 Everest Way, Sacramento, Calif. 95842
Filed Apr. 20, 1966, Ser. No. 544,013
5 Claims. (Cl. 203—11)

A condensation system and method for the production of fresh water from salt water and the like which includes an outer vessel which is cooled to condense and collect vapors, a salt water containing vessel therein, a cylinder with a freely slideable plug therein disposed inside this salt water containing vessel and an electrical and fluid interconnection system for supplying steam to the inside cylinder for moving the plug reciprocably therein and condensing the steam and thereby transferring the latent

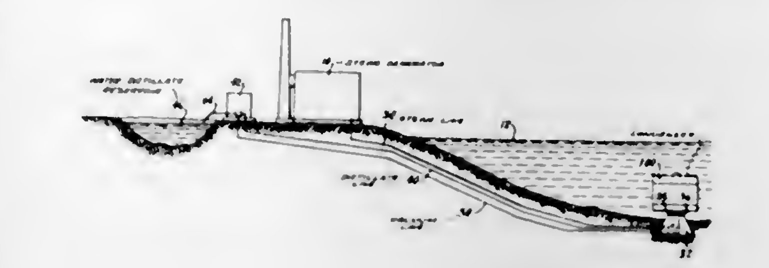

heat of evaporation to the salt water to produce vapor therefrom which is condensed and collected in the outer vessel and conduit systems for the recovery of fresh water at all stages and a method for condensation of steam is disclosed.

3,397,120
PURIFICATION OF DIHYDROISOPHORONE BY PLURAL DISTILLATION AND ISOMERIZATION
William D. Diana, Somerville, William E. Wellman, Edison, and Paul E. Burton, Westfield, N.J., assignors to Esso Research and Engineering Company, a corporation of Delaware
Filed Jan. 13, 1967, Ser. No. 609,214
31 Claims. (Cl. 203—28)

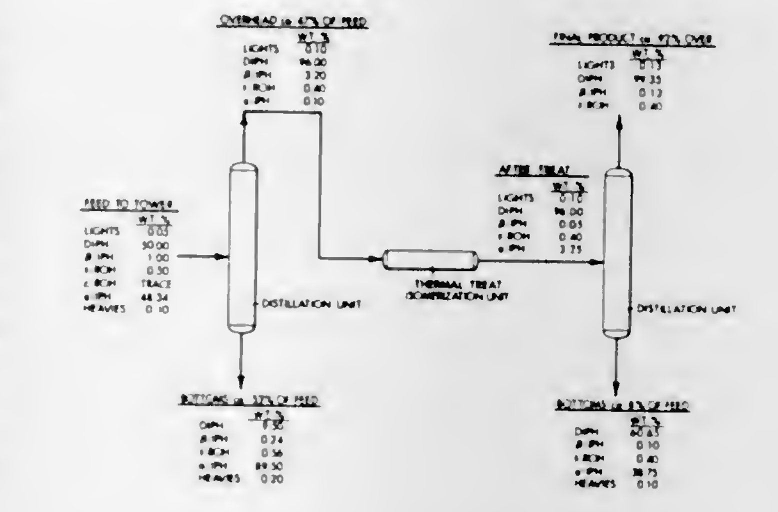

Method for purification of dihydroisophorone from crude dihydroisophorone feedstocks containing beta-isophorone and alpha-isophorone as major impurities whereby both dihydroisophorone and beta-isophorone are first separated from alpha-isophorone by distillation and then dihydroisophorone is thereafter separated from the beta-isophorone impurity by means of isomerizing the beta-isophorone to its alpha-isomer and then separating the resulting alpha-isophorone from dihydroisophorone by distillation to yield dihydroisophorone of 99+% purity.

3,397,121
PURIFICATION OF PHTHALIC ANHYDRIDE
Francis A. Fitzgerald, Mountainside, N.J., assignor to Halcon International, Inc., a corporation of Delaware
No Drawing. Filed Oct. 21, 1963, Ser. No. 317,811
15 Claims. (Cl. 203—35)

1. A process for the purification of crude phthalic anhydride which comprises: heat treating crude phthalic anhydride obtained from the oxidation of ortho-xylene at atmospheric pressure for 4 to 8 hours while withdrawing a purgecut, continuing the heat treating under reduced

pressure between atmospheric and 75 mm. Hg and continuing to remove the purgecut until a distillate has a set point of from 110° C. to 128° C., withdrawing a forecut under reduced pressure until a distillate has a hazen color of 20 or below, and withdrawing a distillate of phthalic anhydride.

3,397,122
PROCESS FOR PURIFYING β-CHLOROETHANE PHOSPHONIC ACID DICHLORIDE BY TREATMENT WITH A TERTIARY AMINE SALT
Kurt Sennewald, Knapsack, near Cologne, Alexander Oborodnik, Liblar, Dieter Kirstein, Cologne-Lindenthal, and Hans-Joachim Hardel, Bruhl-Vochem, Germany, assignors to Knapsack Aktiengesellschaft, Knapsack, near Cologne, Germany, a corporation of Germany
No Drawing. Filed Nov. 15, 1967, Ser. No. 683,123
Claims priority, application Germany, Dec. 23, 1966, K 61,004
6 Claims. (Cl. 203—38)

β-Chloroethane phosphonic acid dichloride contaminated with β-chloroethane phosphate dichloride, is purified by heating the contaminated β-chloroethane phosphonic acid dichloride in the presence of catalytically active proportions of a halogen salt of a tertiary, aliphatic, aromatic or heterocyclic amine to a temperature between about 50 and 350° C. and by thermally splitting the β-chloroethane phosphate dichloride contaminant.

3,397,123
PURIFYING AQUEOUS ACID PHOSPHATE SOLUTIONS CONTAINING FLUORINE IMPURITIES
Jay A. Cull, Jeffersonville, Ind., assignor to Hooker Chemical Corporation, Niagara Falls, N.Y., a corporation of New York
Filed June 3, 1965, Ser. No. 461,023
10 Claims. (Cl. 203—49)

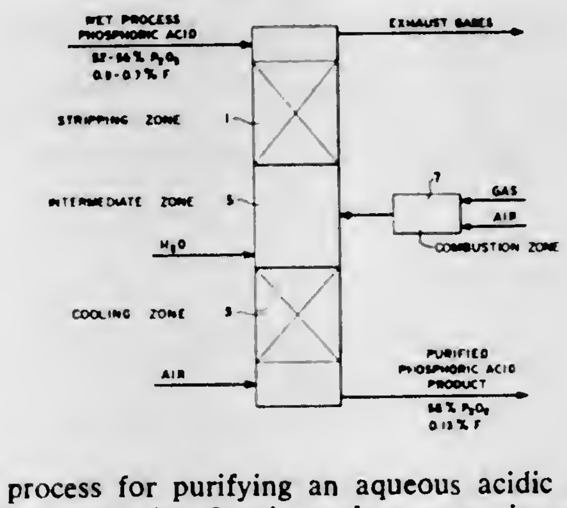

A process for purifying an aqueous acidic phosphate solution containing fluorine values as an impurity comprising forming the solution into a film, continuously passing the film in countercurrent contact with a stream of hot combustion gases in a weight ratio of acidic solution to combustion gas of from 0.5:1 to 2:1, repeatedly stripping and absorbing the fluorine values for a period sufficient to reduce the fluorine content of the solution to a final *P/F* ratio of a minimum of 100:1 under temperature and pressure conditions sufficient to remove substantially all of the free water with the fluorine values.

3,397,124
PROCESS FOR SEPARATION OF ALKYL PHENOLS BY AZEOTROPIC DISTILLATION WITH A NONPOLAR BRANCHED ALKENE
Louis L. Parisse, Oil City, Pa., assignor to Koppers Company, Inc., a corporation of Delaware
Filed Dec. 9, 1966, Ser. No. 600,492
7 Claims. (Cl. 203—52)

Polar alkyl phenols preferentially azeotrope with a nonpolar branched alkene so that the azeotroped alkyl phenol is separable by distillation from less polar alkyl phenols. The nonpolar branched alkene should have about 12 car-

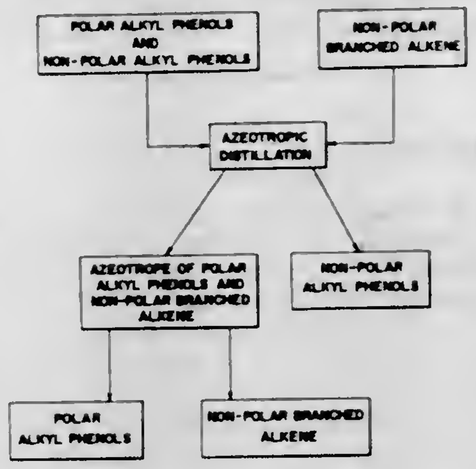

bon atoms and its boiling point should be within 30° C. of the alkyl phenol with which it is to azeotrope.

3,397,125
ELECTROLYTIC PROCESSES
John Graham Tapley, West Kilbride, Scotland, assignor to Imperial Chemical Industries Limited, London, England, a corporation of Great Britain
No Drawing. Filed Oct. 27, 1964, Ser. No. 406,872
Claims priority, application Great Britain, Nov. 25, 1963, 46,441/63
5 Claims. (Cl. 204—3)

There is provided a process for refining metals selected from the group consisting of copper, silver, gold, zinc and cobalt, in which the improvement comprises electrodepositing the metals on an electrode having a surface of conducting silicone elastomer. The metal so deposited may be easily stripped from the electrode without contaminating the metal with parts of the electrode and without damage to the electrode. The electrode may, therefore, be used a plurality of times.

3,397,126
PLATING OF SMALL PARTS
Frederick M. Gilbert, Ramsey, N.J., assignor to Sel-Rex Corporation, Nutley, N.J., a corporation of New Jersey
Filed Oct. 14, 1965, Ser. No. 495,823
6 Claims. (Cl. 204—23)

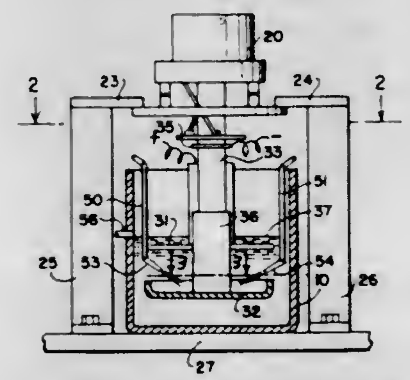

1. In the process for the electrolytic treatment of parts particularly those having portions which are easily distorted or cracked, the improvement comprising:
- depositing a plurality of such parts on a horizontal surface containing a multiplicity of conducting portions exposed on said surface,
- connecting the conducting portions of said horizontal surface to one of the cathode and anode of a source of direct current,
- continuously vibrating said surface to provide a driving force tending to move the parts over said surface,

providing an electrolytic bath surrounding said surface and the parts thereon, establishing the other of said cathode and anode connections in said bath, and additionally supplying a fluid impelling force to drive said parts over said surface in the desired direction.

3,397,127
METHOD AND BATH FOR ELECTROPLATING GOLD
Eldridge K. Camp, Watertown, Conn., assignor to American Chemical & Refining Company, Incorporated, Waterbury, Conn., a corporation of Connecticut
No Drawing. Filed Apr. 12, 1965, Ser. No. 447,536
13 Claims. (Cl. 204—46)

There is disclosed a method of plating gold wherein a soluble gold cyanide complex salt is dissolved in water and the resultant solution acidified to a pH of about 2.0–5.0 to expel substantially all free cyanide therefrom. The pH of the solution is thereafter raised to a value of about 6.1–10.5 at which the plating operation is conducted with an electroplating current to produce gold plated articles having uniform surfaces with a low edge to center ratio.

3,397,128
PROCESS OF ELECTROCHEMICALLY PRODUCING AMINES
Hans Bode, Frankfurt am Main, and Margarete Jung, Nieder Eschbach, Taunus, Germany, assignors to Varta Aktiengesellschaft, Hagen, Westphalia, Germany, a corporation of Germany
Filed May 19, 1964, Ser. No. 368,459
Claims priority, application Germany, May 25, 1963, V 24,101
15 Claims. (Cl. 204—72)

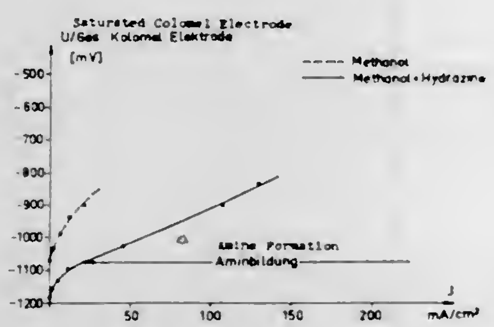

Amines are produced by an electrochemical process wherein an organic compound which has a hydrogen atom which can be oxidized anodically, for example an alcohol, is dehydrogenated in an electrolyte in the presence of hydrazine in contact with a dehydrogenating electrode as the anode at a working potential more positive than the rest potential of the alcohol.

3,397,129
ELECTROLYTIC PROCESS OF PRODUCING PURINE DERIVATIVES
Yasuo Fujimoto, Machida-shi, and Masayuki Teranishi, Tokyo, Japan, assignors to Kyowa Hakko Kogyo Co., Ltd., Tokyo, Japan, a corporation of Japan
No Drawing. Filed Nov. 16, 1964, Ser. No. 411,625
Claims priority, application Japan, Nov. 26, 1963, 38/63,011
8 Claims. (Cl. 204—74)

1. In a process of producing purine derivatives wherein a 4-amino-5-arylazopyrimidine of one of the formulae

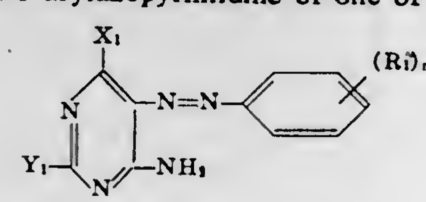

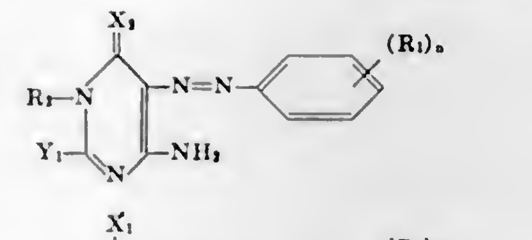

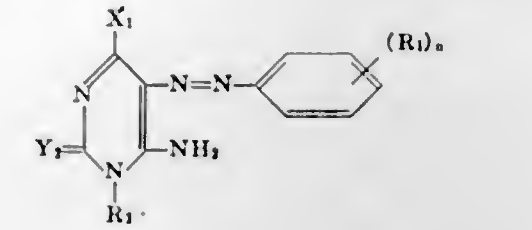

and

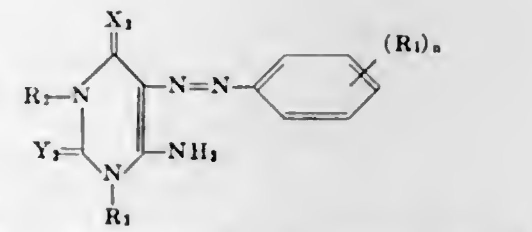

wherein each of X_1 and Y_1 is a member selected from the group consisting of H, lower alkyl, OH, NH_2, lower alkylamino, lower alkylmercapto and SH; each of X_2 and Y_2 is a member selected from the group consisting of NH, O and S; R_1 is a member selected from the group consisting of H, lower alkyl, hydroxyl, lower alkoxy, halogen, nitro, sulfo and carboxy; each of R_2 and R_3 is lower alkyl; and n is one of 0, 1, 2 and 3; only one of X_1 and Y_1 being OH at any one time, is subjected to reduction and imidazole ring closure, the improvement according to which the reduction is electrolytic reduction and is effected together with imidazole ring closure in an electrolyte containing formic acid without separation of any formed intermediate.

3,397,130
PROCESS FOR MANGANESE RECOVERY FROM LEACH SOLUTIONS
Francis E. Brantley, Bowie, Md., and Carl Rampacek, Arlington, Va., assignors to the United States of America as represented by the Secretary of the Interior
Filed Oct. 20, 1965, Ser. No. 499,115
7 Claims. (Cl. 204—105)

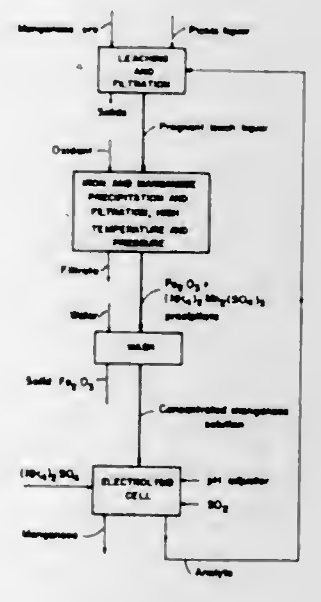

3. A process for separating iron and manganese compounds from pregnant leach liquor resulting from leaching manganiferous ores with a leach solution containing ferrous sulfate, sulfuric acid and ammonium sulfate which comprises heating said liquor to at least 200° C., in the presence of an oxidizing agent, under a pressure of about saturated steam pressure at the temperature to which

said liquor has been heated, maintaining said temperature and pressure for a period of time sufficient to allow the precipitation of ferric oxide and a manganese-ammonium complex, $(NH_4)_2Mn_2(SO_4)_3$, and separating said precipitate from remaining liquor while said remaining liquor is maintained at the precipitation temperature and pressure.

4. The process of claim 3 wherein said precipitation temperature is at least 250° C.

5. The process of claim 4 wherein said precipitate is separated from said liquor by filtration, said separated precipitate is washed with water to dissolve said complex therein, and resultant wash water containing said complex is separated from ferric oxide precipitate.

3,397,131
METHOD OF PREPARING ORGANOTIN COMPOUNDS
John G. Kircher, Worthington, James L. McFarling, Columbus, Robert E. Wyant, Delaware, and Ernest J. Kahler, Columbus, Ohio, assignors to the United States of America as represented by the United States Atomic Energy Commission
No Drawing. Filed Nov. 13, 1964, Ser. No. 411,168
3 Claims. (Cl. 204—158)

A method of preparing organotin compounds by washing finely divided tin with a dilute halogen, mixing the tin with an alkyl halide, and adding concentrated HBr or HCl. The resulting mixture is then heated and subjected to gamma radiation, causing formation of the organotin compounds.

3,397,132
TREATMENT OF METAL SURFACES
Leon Edward Wolinski, Buffalo, N.Y., assignor to E. I. du Pont de Nemours and Company, Wilmington, Del., a corporation of Delaware
Filed Oct. 16, 1964, Ser. No. 404,234
10 Claims. (Cl. 204—165)

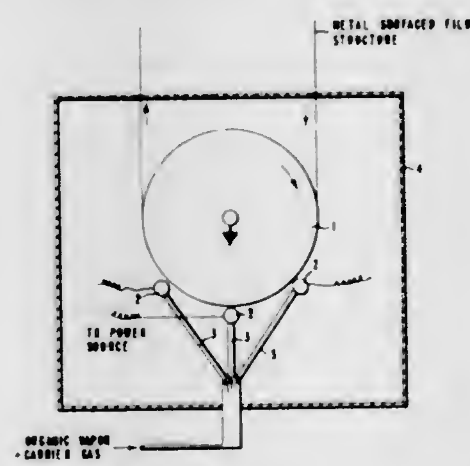

Metal surfaces are rendered more adherent to polymer coatings by subjecting the metal surface to the action of a pulsating electrical discharge at voltages of from about 1000 to about 100,000 and at frequencies of from about 350 to 500,000 cycles per second, at atmospheric pressure in an atmosphere consisting of an inert gaseous carrier medium which will sustain said electrical discharge and up to about 5% by volume of an organic agent having a vapor pressure of at least 0.25 mm. of mercury at 60° C., said agent being selected from the group consisting of polymerizable organic compounds, nonpolymerizable organic compounds having replaceable hydrogen and perhalohydrocarbons.

3,397,133
APPARATUS FOR PRODUCING SILVER NITRATE
Vsevolod Sooryn, Paris, France, assignor to Benjamin B. Doeh, New York, N.Y.
Original application Mar. 21, 1960, Ser. No. 16,304, now Patent No. 3,222,128. Divided and this application Dec. 18, 1964, Ser. No. 428,001
2 Claims. (Cl. 204—208)

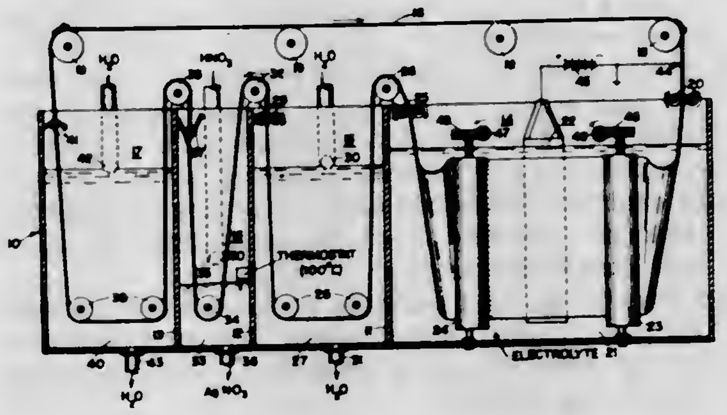

An apparatus for the production of crystals of a metal salt, especially silver nitrate, wherein an endless inert conductive belt of stainless steel is passed successively through an electrolyte container in which a compound of the metal cation is formed electrolytically on the band, then into a water bath wherein excess electrolyte is removed and a receptacle containing a liquid (e.g. a nitric acid) capable of reacting with the adherent compound to produce particles of the salt on the band, the particles being removed by a stripper after the band emerges from the receptacle and before it is returned to the electrolysis stage, the band being diverted from a horizontal position into a substantially vertical position for electrolysis.

3,397,134
DEVICE FOR HOLDING AND MOVING CHAINS FOR LIQUID TREATMENT THEREOF
Edwin C. Rinker, Morristown, and Frederick M. Gilbert, Ramsey, N.J., assignors to Sel-Rex Corporation, Nutley, N.J., a corporation of New Jersey
Filed June 28, 1965, Ser. No. 467,619
4 Claims. (Cl. 204—212)

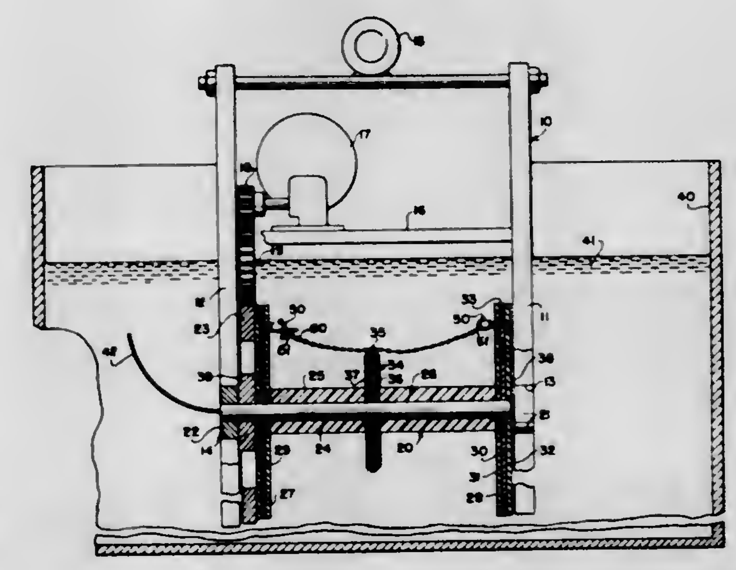

1. In a device for subjecting chains to liquid treatment such as electroplating operations, an improved chain-holding and moving device comprising,

a spool comprising a core with two end rims and at least one centrally positioned disk extending peripherally from the core,

conductor means extending through the core between the rims thereof,

each of said rims comprising a conductor element with a central portion making electrical contact with said conductor means and with portions extending radially from the central portion to approximately the edge thereof,
the conductor elements of said rims and said core being substantially completely covered with electrically nonconducting material,
a plurality of electrically conducting hook means extending from the conductor elements of a first of said rims toward the second rim,
a similar number of electrically conducting hook means on said second rim whereby a chain may be suspended between said rims by attaching the end regions thereof to a pair of said hooks on opposite rims,
said centrally positioned disk comprising a conductor element extending from the conducting means on said core to the periphery of the disk,
portions of the said centrally positioned disk between the core conducting means and adjacent to but short of the periphery being covered by electrically nonconducting material.

3,397,135
INTEGRAL PUMP AND FILTER ASSEMBLY INCLUDING ELECTRODE MEANS
Walter J. Otto, Wantagh, N.Y., assignor to Julius L. Englesberg, Rockville Centre, N.Y.
Filed Sept. 21, 1964, Ser. No. 397,805
8 Claims. (Cl. 204—276)

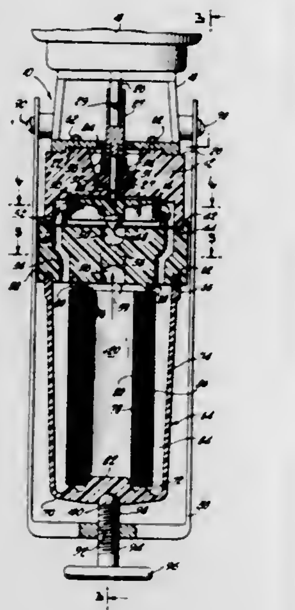

An integral pump and filter assembly in which a pump is responsive to drive means and comprises a body portion disposed below the drive means, an impeller, electrode means and filter means disposed below the body portion.

3,397,136
CORONA TREATING APPARATUS HAVING AN ELECTRODE WITH AN ADJUSTABLE WIDTH
John Balogh, Oakland, N.J., assignor to Deerpark Machine Co., Hawthorne, N.J., a corporation of New Jersey
Filed Oct. 7, 1965, Ser. No. 493,809
4 Claims. (Cl. 204—312)

1. An apparatus for treating a piece of material in a corona discharge, said apparatus comprising an elongated conducting rod, a plurality of anodes located side by side upon said rod and swingable individually from an operative position to an inoperative position and vice versa, means for supporting the material adjacent the anodes located in their operative positions said means including an electrically conductive electrode and a dielectric mate-

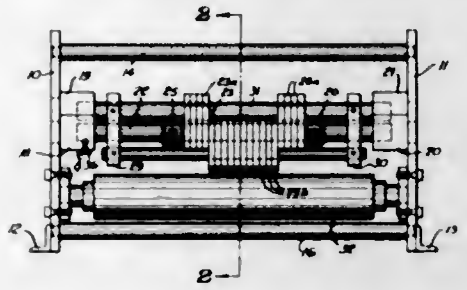

rial covering said electrode and means supplying an electrical current to said electrode and to said rod and said anodes.

3,397,137
HYDROCARBON REFORMING PROCESS AND CATALYST COMPOSITIONS THEREFOR
Paul E. Pickert, North Tonawanda, and Anthony P. Bolton, Amherst, N.Y., assignors to Union Carbide Corporation, a corporation of New York
No Drawing. Continuation-in-part of application Ser. No. 472,653, July 16, 1965. This application May 15, 1967, Ser. No. 638,655
7 Claims. (Cl. 208—138)

Hydrocarbon reforming catalyst comprises zeolite X having a SiO_2/Al_2O_3 ratio of from 2.3 to 3, at least 92 percent of its aluminum ions balanced by metal cations of which at least 60 equivalent percent of the cations thereof being selected from calcium, manganese, barium or strontium or mixtures thereof, from 0.04 to 30 equivalent percent of the cations thereof being rare earth and having a Group VIII noble metal hydrogenation agent thereon. Preferably, the catalyst is also in admixture with an inorganic oxide diluent which is itself a hydrogenation catalyst or carries such an agent thereon.

3,397,138
GAS SEPARATION EMPLOYING WORK EXPANSION OF FEED AND FRACTIONATOR OVERHEAD
Kenneth H. Bacon, Tulsa, Okla., assignor to Warren Petroleum Corporation, Tulsa, Okla., a corporation of Delaware
Filed Dec. 2, 1965, Ser. No. 511,150
6 Claims. (Cl. 208—340)

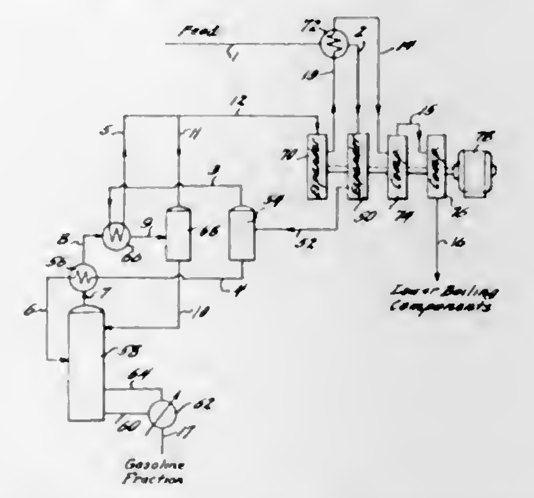

The process for the recovery of a relatively high boiling component from a gaseous mixture by cooling the gaseous mixture through an initial heat exchange with vapor produced subsequently in the process, substantially adiabatically expanding the cooled mixture in a work recovery engine whereby mechanical energy is obtained and the mixture is further cooled to form a vapor-liquid mixture, separating this vapor and the liquid, fractionally distilling the liquid to form a second vapor, removing the

relatively high boiling component as bottoms, heat exchanging the second vapor with the liquid and the previously formed vapor to provide an uncondensed vapor and a condensed liquid, combining the previously formed vapor and the uncondensed vapor, subjecting the combined vapors to substantially adiabatic expansion in a work recovery engine whereby such vapors are cooled and mechanical energy is obtained, heat exchanging the combined and cooled vapors with the gaseous mixture in the initial step and employing the total mechanical energy obtained at least to recompress partly such vapors after heat exchange with the incoming gaseous mixture.

3,397,139
WASTE TREATMENT PROCESS
James G. Sak, Midland, Mich., assignor to The Dow Chemical Company, Midland, Mich., a corporation of Delaware
Filed Jan. 25, 1967, Ser. No. 611,673
6 Claims. (Cl. 210—7)

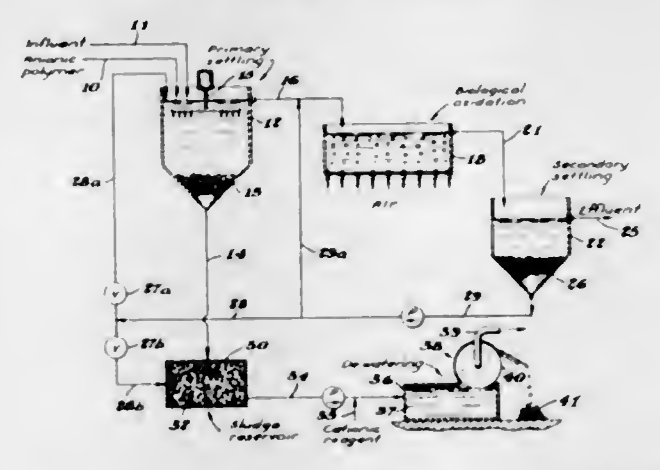

The present invention involves an improved secondary waste treatment process. Such processes normally comprise the unit operations of primary settling, biological oxidation, secondary settling and dewatering of a mixed sludge from the primary and secondary settling operations. These operations are modified herein with the use of a high molecular weight organic anionic polymer flocculant in the primary settling operation and the use of cationic reagents, especially cationic organic polymers, to condition the mixed sludge for dewatering. As the process is practiced herein, this sludge is an adjusted mixture of secondary and primary sludge solids, with a significantly lower proportion of secondary sludge solids.

3,397,140
METHOD OF DEWATERING SEWAGE SLUDGE
Stanley J. Dea, 2701 Easton St., Hillcrest Heights, Md. 20023
Filed Dec. 5, 1966, Ser. No. 599,191
10 Claims. (Cl. 210—10)

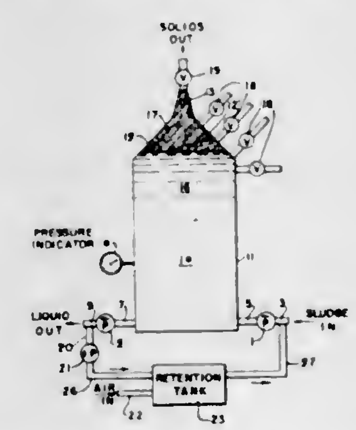

The present invention resides in a method for rapidly and efficiently dewatering sewage sludge by maintaining a batch of sludge in a closed space and by permitting gas to be generated by the sludge, or by introducing gas into the space, for floating solids to the top of the batch and for producing a high pressure which compresses the floated solids into a relatively compact cake.

3,397,141
METHOD FOR SEPARATING CONCENTRATED SOLUTION OF ELECTROLYTE FROM HIGH VISCOUS SOLUTION BY DIALYSIS AND AN APPARATUS THEREFOR
Shiro Nakai, Hirakata-shi, Japan, assignor to Kimura Entetsu, Kagaku Kikai Co., Ltd.
Filed Apr. 21, 1966, Ser. No. 544,218
Claims priority, application Japan, Dec. 10, 1965, 40/75,709
4 Claims. (Cl. 210—22)

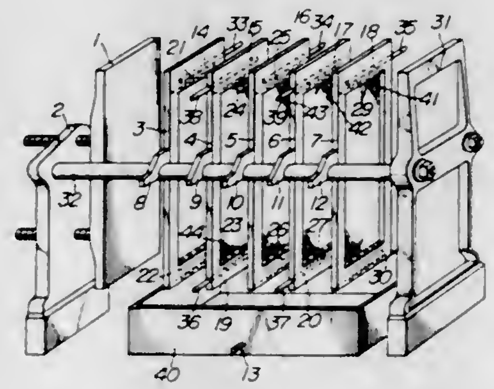

A dialysis process for recovering an electrolyte from a highly viscous solution having a viscosity of 20 to 700 poises by feeding the solution into dialyzate cells from the top in a distributed state, allowing the solution to flow downwardly only by gravity into an open receiver, while feeding a receiving solvent into diffusate cells from the bottom in a distributed state, allowing the solvent to flow upwardly only and then collecting and withdrawing the resultant diffusate, the solution and solvent passing alternately countercurrentwise without pressure difference therebetween through a plurality of cells tightly clamped together with membranes therebetween.

3,397,142
PROCESS FOR THE ELIMINATION OF ANIONS FROM A SOLUTION
Jean Louis Guth and Raymond Wey, Mulhouse, France, assignors to Commissariat à l'Energie Atomique, Paris, France
No Drawing. Filed Jan. 18, 1965, Ser. No. 426,378
Claims priority, application France, Jan. 27, 1964, 961,688
3 Claims. (Cl. 210—24)

Removes anions derived from oxyacids in an aqueous solution at temperatures of 200° C. and above by passing said solution through nepheline hydrate, an aluminosilicate.

3,397,143
METHOD FOR THICKENING SLUDGE
Heinrich Sontheimer, Falkenstein, Taunus, and Arthur J. Fischer, Frankfurt am Main, Germany, assignors to Fuller Company, Catasauqua, Pa., a corporation of Delaware
No Drawing. Filed June 28, 1966, Ser. No. 561,015
Claims priority, application Germany, July 2, 1965, M 65,778
3 Claims. (Cl. 210—49)

A method for thickening sludges in a basin by operating a stirring mechanism so that the stirrer traverses the basin in a series of reversing forward and backward movements through the basin. An additional step of

allowing a quiescent period for settling after each reversal of the stirrer may be incorporated into the process.

3,397,144

CONTROL OF MICRO-ORGANISMS IN INDUSTRIAL PROCESS WATERS

David Yi-Lan Liu, Sao Paulo, Brazil, assignor to Nalco Chemical Company, Chicago, Ill., a corporation of Delaware

No Drawing. Continuation-in-part of application Ser. No. 285,251, June 4, 1963. This application Mar. 21, 1967, Ser. No. 624,727

13 Claims. (Cl. 210—62)

A method of inhibition and control of microorganisms in industrial process water systems through the use of water-soluble organic haloester-alcohol compositions.

3,397,145

HYDROCARBON OILS CONTAINING ALKYLTHIOPHOSPHORIC ACID SALTS OF POLYMERIC CONDENSATION PRODUCTS

Henry A. Cyba, Chicago, Ill., assignor to Universal Oil Products Company, Des Plaines, Ill., a corporation of Delaware

No Drawing. Continuation-in-part of application Ser. No. 783,156, Dec. 29, 1958. This application Nov. 16, 1959, Ser. No. 852,930

11 Claims. (Cl. 252—32.7)

1. A hydrocarbon oil containing from about 0.001% to about 15% by weight of an alkyldithiophosphoric acid salt formed by the addition reaction of an alkyldithiophosphoric acid to a tertiary nitrogen atom of a polymeric reaction product containing said tertiary nitrogen atom in a proportion of at least one equivalent of said acid per one basic equivalent of said product, said polymeric reaction product being selected from the group consisting of (1) the condensation product of from one to two mole proportions of an N-aliphatic-dialkanol amine in which the aliphatic group attached to the nitrogen atom contains from 1 to 50 carbon atoms with one mole proportion of an aliphatic polycarboxylic acid containing from 2 to about 4 carboxylic acid groups and from 2 to about 36 carbon atoms or an anhydride of said polycarboxylic acid, (2) the reaction product of equimolar proportions of an epihalohydrin and a primary or secondary alkyl amine, and (3) the reaction product of A and B, A being selected from the group consisting of vinyl ester of carboxylic acid containing up to 18 carbon atoms, ester of vinylene dicarboxylic acid containing up to 12 carbon atoms, alkyl amides of acrylic acids in which the alkyl contains up to 18 carbon atoms, and alkyl styrenes in which the alkyl contains up to 12 carbon atoms, and B being selected from the group consisting of p - (beta - diethylaminoethyl)-styrene, a beta-aminoethyl vinyl ether, N - aminoethyl acrylamides and diallylamine.

3,397,146

LUBRICATING COMPOSITIONS

Robert A. Cupper, Ridgefield, Conn., and Maurice W. Ranney, New City, N.Y., assignors to Union Carbide Corporation, a corporation of New York

No Drawing. Filed Aug. 22, 1966, Ser. No. 573,818

2 Claims. (Cl. 252—34)

Lubricating compositions comprising mineral oil containing as a viscosity index improver-dispersant additive a polymer of a long chain alkyl acrylate or methacrylate, alkyl acrylate or methacrylate wherein the alkyl has from 1 to 4 carbon atoms, and acrylic or methacrylic acid, wherein the acid moieties of the polymer are neutralized with a 1-hydroxy-alkyl-2-alkyl or alkenyl imidazoline.

3,397,147

ELECTROVISCOUS FLUID COMPOSITION

Thomas W. Martinek, Danville, Ill., assignor to Union Oil Company of California, Los Angeles, Calif., a corporation of California

No Drawing. Continuation-in-part of application Ser. No. 248,227, Dec. 31, 1962. This application Jan. 10, 1968, Ser. No. 696,698

8 Claims. (Cl. 252—78)

An electroviscous fluid comprising a non-polar oleaginous vehicle, such as a mineral oil, and a particulate solid consisting of silica particles having partially esterified surfaces. The fluid may also contain other ingredients such as a surface active agent, an amine and water.

3,397,148

STABLE SOLVENT COMPOSITIONS

George N. Grammer and Percy W. Trotter, Baton Rouge, La., assignors to Ethyl Corporation, New York, N.Y., a corporation of Virginia

No Drawing. Continuation-in-part of application Ser. No. 444,447, Mar. 31, 1965, which is a division of application Ser. No. 99,068, Mar. 29, 1961. This application Aug. 9, 1966, Ser. No. 571,169

5 Claims. (Cl. 252—171)

1,1,1-trichloroethane stabilized against metal corrosion with dioxolane and an epoxide.

3,397,149

ANTI-SCALE COMPOSITION

Alvin V. Gruber, Rutherford, N.J., assignor, by mesne assignments, to Herman Kahn, New York, N.Y.

No Drawing. Filed Dec. 3, 1965, Ser. No. 511,317

10 Claims. (Cl. 252—181)

A method and compositions of matter useful for preventing scale formation during the recovery of fresh water by distillation of sea water or other water at temperatures above about 170° F. are described. The method consists of adding to the water to be distilled small but effective amounts as low as 1 part of the composition to 40,000 parts of water. The compositions consist essentially of agave juice, sodium pyrophosphate, ethylene diamine tetraacetic acid and either sodium silicate or sulfamic acid or both. Practically operable and preferred ranges of proportions of the ingredients, concentrations of the composition in the water to be distilled and distillation temperatures are given.

3,397,150

COMPOSITION AND METHOD FOR TREATING SURFACES

James Gordon Burt, Nottingham Township, Chester County, Pa., and Howard Elliot Phillips, New Castle, Del., assignors to E. I. du Pont de Nemours and Company, Wilmington, Del., a corporation of Delaware

No Drawing. Filed Mar. 15, 1966, Ser. No. 534,427

15 Claims. (Cl. 252—194)

Water is removed from solid surfaces by treating with a composition containing trichlorotrifluoroethane and a solute derived from a monoalkyl or dialkyl phosphate ester in which the alkyl groups each contain 6–20 carbon atoms, and a saturated aliphatic amine containing 1–3 alkyl groups attached to the amine nitrogen and a total of 6–20 carbons. These compositions prevent rusting of ferrous metal surfaces.

3,397,151

PROCESS OF PRODUCING A SILICATE-CARBON COMPLEX

Walter R. Payment, Evanston, Ill., assignor to W. R. Grace & Co., New York, N.Y., a corporation of Connecticut

No Drawing. Filed Oct. 15, 1965, Ser. No. 496,690

6 Claims. (Cl. 252—378)

A method of producing a silicate-carbon complex which comprises mixing ore selected from the group consisting of vermiculite and perlite with a compound selected from the group consisting of sorbitol, glycerol, and glyceride, and heating said mixture to a temperature sufficient to exfoliate said ore and carbonize said compound.

3,397,152

CORROSION INHIBITOR COMPOSITION AND PROCESS

Louise H. Brown, Santa Monica, and Ronald Swidler, Pasadena, Calif., assignors, by mesne assignments, to Armour and Company, Chicago, Ill., a corporation of Delaware

No Drawing. Continuation-in-part of application Ser. No. 111,495, May 22, 1961. This application Oct. 23, 1965, Ser. No. 504,216

23 Claims. (Cl. 252—390)

6. A corrosion inhibitor composition consisting essentially of an effective corrosion inhibiting amount of an amine having the formula:

$$CH_3(CH_2)_X-\underset{\displaystyle R}{\underset{|}{C}H}-(CH_2)_Y-CH_2NH_2$$

wherein R is an aryl radical, X is an integer from 0 to 20, Y is an integer from 1 to 21, and X and Y is from 7 to 21.

3,397,153

PROCESS FOR MANUFACTURING SINTERED SILICA GEL OF LOWERED BULK DENSITY AND CATALYST CONTAINING SAME

Roy J. Sippel, Wilmington, Del., assignor to E. I. du Pont de Nemours and Company, Wilmington, Del., a corporation of Delaware

No Drawing. Filed Dec. 23, 1965, Ser. No. 516,116

6 Claims. (Cl. 252—452)

A process for manufacturing a sintered silica gel of low bulk density from a mixture of a silica aquasol of average particle diameter D in the range of about 5 to about 100 millimicrons and a second silica aquasol of average particle diameter *d* in the range of about 0.4 D to 0.8 D millimicrons, said sintered silica gel having a bulk density lower than a gel similarly prepared from either of the component sols alone. A salt of a catalytic metal may be incorporated in the gel.

3,397,154

PREPARATION OF ALUMINA-SUPPORTED CATALYST COMPOSITIONS AND THE PRODUCTS THEREOF

Herbert Talsma, Westchester, Pa., assignor to E. I. du Pont de Nemours and Company, Wilmington, Del., a corporation of Delaware

Continuation-in-part of application Ser. No. 222,238, Sept. 7, 1962. This application July 9, 1963, Ser. No. 293,618

10 Claims. (Cl. 252—463)

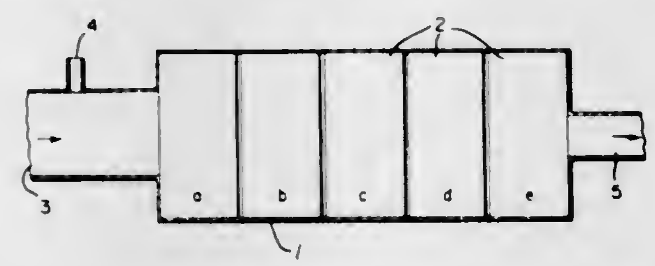

1. A supported catalyst consisting essentially of at least 0.01% by weight of a catalytically active metal component deposited on a porous refractory body, said catalytically active metal component being selected from the group consisting of (1) oxides and mixed oxides of iron, cobalt, nickel, vanadium, chromium, manganese, copper, zinc, molybdenum, silver, tin, barium, cerium, tungsten, lead and bismuth; (2) elemental ruthenium, platinum, palladium, rhodium, osmium and iridium; and (3) mixtures thereof, said porous refractory body comprising a skeletal structure of dense, crystalline cell-defining walls, said cells having an average diameter between 0.5 and 200 mils, the walls defining said cells having a thickness of between 0.3 and 200 mils, the wall material being selected from the group consisting of alpha alumina, compounds and solid solutions of alumina and at least one other metal oxide, and solid solutions of at least one metal oxide in said compounds of alumina, provided that said wall material contain at least 30% by weight Al_2O_3 and at least 1% aluminum in a state of oxidation below a valence of 3.

7. A method for making supported catalysts which comprises firing a molded body, at a temperature within the range of 650° and 1500° C. and in the presence of oxygen, said molded body comprising aluminum particles having one dimension of at least 7 mils, a second dimension of at least about 0.5 mil and a third dimension of between 0.5 and 200 mils, and between 0.02% and 20% by weight of the aluminum of a metal oxide fluxing agent selected from the group consisting of the oxides of the alkali metals, the alkaline earth metals, vanadium, chromium, molybdenum, tungsten, copper, silver, zinc, antimony and bismuth, precursors of said oxides yielding the indicated amount of said oxide under the firing conditions, and hydroxides of the alkali metals until at least 10% of the aluminum has been oxidized and at least 1% is present in a state of oxidation below a valence of 3, and depositing a catalytically active metal component selected from the group consisting of (1) oxides and mixed oxides of iron, cobalt, nickel, vanadium, chromium, manganese, copper, zinc, molybdenum, silver, tin, barium, cerium, tungsten, lead and bismuth; (2) elemental ruthenium.

3,397,155

POLYMERIZATION OF MONOEPOXIDES EMPLOYING HIGH SURFACE AREA PHOSPHATE CATALYSTS

Paul A. Naro, Pennington, and Robert D. Offenhauer, West Trenton, N.J., assignors to Mobil Oil Corporation, a corporation of New York

No Drawing. Continuation-in-part of applications Ser. No. 164,391, Jan. 4, 1962, and Ser. No. 225,387, Sept. 21, 1962. This application Aug. 26, 1965, Ser. No. 482,930

The portion of the term of the patent subsequent to Feb. 22, 1983, has been disclaimed

12 Claims. (Cl. 260—2)

1. A process which comprises polymerizing a vicinal monoepoxide compound free from ethylenic and acetylenic unsaturation in the presence of from about 0.005 to about 15 weight percent, based on the weight of the monoepoxide compound, of a metal phosphate catalyst which has a surface area in excess of about 75 square meters per gram, wherein the metal portion of said metal phosphate is selected from the group consisting of boron, aluminum, gallium, indium and thallium, said metal phosphate being prepared by reacting a compound selected from the group consisting of orthophosphoric acid and diammonium hydrogen phosphate with a halide of said metal, neutralizing the reaction product, and drying and calcining the neutralized reaction product, at a polymerization temperature from about 20° C. to about 150° C., for a period of time sufficient to produce a solid polymer.

3,397,156

RAPID CURING EPOXY RESIN COMPOSITIONS

Romeo Lopez and James A. Clarke, Lake Jackson, Tex., assignors to The Dow Chemical Company, Midland, Mich., a corporation of Delaware

No Drawing. Filed Nov. 4, 1965, Ser. No. 506,406

10 Claims. (Cl. 260—2)

This invention relates to compositions of matter consisting of the reaction products of certain epoxy resins, a dicyandiamide curing agent and an acyl guanidine ac-

celerator. These compositions can be rapidly cured to form materials which are particularly suited for use as metal adhesives and coatings.

3,397,157
RAPID CURING EPOXY RESIN COMPOSITIONS
George W. Holmes, Walnut Creek, Calif., assignor to The Dow Chemical Company, Midland, Mich., a corporation of Delaware
No Drawing. Filed Nov. 26, 1965, Ser. No. 510,096
8 Claims. (Cl. 260—2)

This invention relates to compositions of matter consisting essentially of the reaction products of certain epoxy resins, a dicyandiamide curing agent and an accelerator comprising certain polyamine-metallic salt coordination complexes. These compositions are particularly suitable for use as adhesives and coatings and the like where a rapid high temperature latent cure is desired.

3,397,158
CELLULAR POLYURETHANES
J W. Britain, New Martinsville, and Paul G. Gemeinhardt, Sistersville, W. Va., assignors to Mobay Chemical Company, Pittsburgh, Pa., a corporation of Delaware
No Drawing. Filed Nov. 3, 1958, Ser. No. 771,242
20 Claims. (Cl. 260—2.5)

10. A process for producing a polyurethane which comprises reacting (a) an organic polyisocyanate with (b) a polyalkylene ether polyol, in the presence of a catalytic amount of stannous octoate, wherein the sole reactive groups present in said (a) and (b) are isocyanato and aliphatic alcoholic hydroxyl groups, respectively.

11. In the preparation of a polyurethane plastic by a process which comprises reacting the condensation product of an alkylene oxide having a molecular weight of at least about 500 and an organic polyisocyanate, the improvement which comprises effecting the said reaction with a catalytic amount of a catalyst containing a tertiary amine and a stannous salt of an acid having from 1 to 18 carbon atoms.

3,397,159
AQUEOUS SOLUTIONS OF SALTS OF 1,4-BIS(2-HYDROXYPROPYL)-2-METHYL PIPERAZINE AND EPOXY ESTER-MALEIC ANHYDRIDE ADDUCTS
William W. Slater and Lawrence E. Thow, Louisville, Ky., assignors, by mesne assignments, to Celanese Coatings Company, a corporation of Delaware
No Drawing. Filed Feb. 18, 1964, Ser. No. 345,564
13 Claims. (Cl. 260—18)

Aqueous coating compositions particularly useful in electrophoretic coating processes are made from aqueous solutions of the salts of (1) 1,4-bis(2-hydroxypropyl)-2-methylpiperazine and (2) maleic anhydride adducts of unsaturated fatty acid esters of glycidyl ethers of dihydric phenols.

3,397,160
POLYURETHANE MODIFIED EPOXY ESTERS
Darrell D. Hicks, Louisville, Ky., assignor to Celanese Coatings Company, New York, N.Y., a corporation of Delaware
No Drawing. Filed Feb. 17, 1966, Ser. No. 528,088
6 Claims. (Cl. 260—18)

Polyurethane modified epoxy esters suitable for use in coatings are produced by the reaction of (A) a monohydroxy triester of a fat acid and a glycidyl ether of a dihydric phenol, (B) a di-hydroxy diester of a fat acid and a glycidyl ether of a dihydric phenol, and (C) an organic diisocyanate.

3,397,161
RESINOUS CONDENSATION PRODUCTS OF AMINOPOLYAMIDES AND HALOMETHYLDIPHENYL ETHER
Lewis S. Miller, Bellevue, Wash., assignor to The Dow Chemical Company, Midland, Mich., a corporation of Delaware
No Drawing. Filed June 30, 1965, Ser. No. 468,562
10 Claims. (Cl. 260—18)

Thermosetting cationic polymers are obtained by cross-linking an aminopolyamide prepared from a dibasic carboxylic acid and a polyalkylene polyamine with a halomethyldiphenyl ether containing about 1.5–4.0 halomethyl groups per molecule. These cationic polymers are particularly useful as a thermosetting wood adhesive and coating composition.

3,397,162
NON-BLOCKING WATER-SOLUBLE POLYVINYL ALCOHOL FILMS
Bin Takigawa, Nobuaki Sakamoto, and Shigeto Miyoshi, Tokyo, Japan, assignors to Denki Kagaku Kogyo Kabushiki Kaisha, Tokyo, Japan
No Drawing. Filed Mar. 1, 1965, Ser. No. 436,341
Claims priority, application Japan, June 18, 1964, 39/34,072
9 Claims. (Cl. 260—23)

The provision of water soluble polyvinyl alcohol films having no self-adhesion in high humidity by incorporating an additive selected from the group consisting of monobasic higher fatty acids having more than 10 carbon atoms, their sodium salts, their lauryl esters, their methylol amides and higher aliphatic alcohols having more than 10 carbon atoms to water soluble polyvinyl alcohol.

3,397,163
COATED POLYOLEFIN FILM STRUCTURE AND PROCESS OF PREPARATION THEREOF
Michael Francis Bruno and John Damian Sculley, Tonawanda, N.Y., assignors to E. I. du Pont de Nemours and Company, Wilmington, Del., a corporation of Delaware
No Drawing. Filed Jan. 28, 1964, Ser. No. 340,822
5 Claims. (Cl. 260—28.5)

A coated film structure of a polyolefin such as polyethylene is provided wherein the coating is a composition of a copolymer of vinylidene chloride, an alkyl acrylate and acrylic acid admixed with a naturally occurring wax such as carnauba.

3,397,164
PETROLEUM WAX CONTAINING HIGH-MOLECULAR-WEIGHT, ACETOXY-SUBSTITUTED SATURATED POLYBUTADIENE
Duncan W. Frew, Jr., Pleasant Hill, Calif., assignor to Shell Oil Company, New York, N.Y., a corporation of Delaware
No Drawing. Filed Aug. 22, 1966, Ser. No. 573,850
2 Claims. (Cl. 260—28.5)

Novel compositions comprising a petroleum wax and from about 5 to about 50% of a polymer having an intrinsic viscosity of at least 1.2 dl./g., said polymer produced by (a) epoxidizing between about 10% and 25% of the ethylenic unsaturation of a polybutadiene having less than 10% 1,2-units, (b) selectively hydrogenating the polymer of (a) until the remaining ethylenic unsaturation is removed, (c) converting the epoxide groups to hydroxyl groups by treating the polymer of (b) with a reducing agent, and (d) acetylating the hydroxyl groups of the polymer of (c). The wax-polymer compositions are useful as laminating waxes and coatings for cartons, corrugated board and the like.

3,397,165
PREPARATION OF LATEX OF BUTADIENE-CONTAINING COPOLYMERS
Donald Goodman, Brighton, Irving E. Isgur, Framingham, and Donald M. Wacome, Bedford, Mass., assignors to W. R. Grace & Co., Cambridge, Mass., a corporation of Connecticut
No Drawing. Filed May 4, 1964, Ser. No. 364,761
7 Claims. (Cl. 260—29.7)

Butadiene polymer latices of narrow particle size distribution are prepared by polymerizing monomers in the presence of a seed latex having a particle size of 50–800 angstroms. The monomers and emulsifier are added continuously during the polymerization. The continuous inflow of the emulsifier to the latex is controlled at a rate which permits the coverage of but 30–70% of the surface of the enlarging latex particle until the desired particle size is reached.

3,397,166
METHOD OF PREPARING POLYMER DISPERSIONS IN A MIXED HYDROCARBON AND FLUORINATED HYDROCARBON SOLVENT MEDIA
Claude J. Schmidle and George I. Brown, Moorestown, N.J., assignors to Rohm & Haas Company, Philadelphia, Pa., a corporation of Delaware
No Drawing. Filed Feb. 13, 1961, Ser. No. 88,631
4 Claims. (Cl. 260—33.6)

1. A process for producing a dispersion of a polymer in a substantially anhydrous essentially inert liquid medium which comprises initially dissolving a polymer selected from the group consisting of natural and synthetic rubber polymers, oxidized vegetable oils, and oil-soluble polymers formed exclusively of monoethylenically unsaturated molecules comprising at least one ester of an acid of the formula

$$H_2C{=}\underset{\displaystyle COOH}{\underset{|}{C}}{-}(CH_2)_{n-1}H$$

in which n is an integer having a value of 1 to 2, with an alcohol having 4 to 18 carbon atoms in an anhydrous liquid medium consisting essentially of a mixture of (a) at least one member selected from the group consisting of aliphatic, aromatic, and naphthenic hydrocarbons and (b) at least one fluorinated aliphatic hydrocarbon having 1 to 5 carbon atoms, the weight ratio of (a) to (b) being from 1:10 to 10:1, the liquid medium containing about 0.1 to 5% by weight, based on the weight of the dissolved polymer, of an addition-polymerization catalyst, the pressure being in the range of normal atmospheric pressure to superatmospheric pressure to assure that, at the temperature of the polymerization, it occurs in the anhydrous medium while in liquid state, heating the mixture for a period of at least 5 minutes to one hour at a temperature of at least 65° C. to 120° C. to form active sites on the polymer, the time being longer at lower temperatures in the range and being shorter at the higher temperatures in the range, and the temperature and time of heating being less than that which effects cross-linking, then adding at least one polymerizable ethylenically unsaturated monomer having at least one group of the formula

$$H_2C{=}C\Big<$$

to the polymer solution and effecting polymerization at a temperature in a range from about −10° C. to about 120° C. to produce a stable dispersion of solid polymer particles insoluble in the medium and having sizes in the range of about 0.05 to 10 microns, the weight of monomer added being sufficient to produce a concentration, in the final dispersion, of at least about 1% to about 55% by weight of the aforesaid dispersed insoluble solid polymer particles, the amount of the aforementioned polymer initially dissolved in the hydrocarbon medium being about 2 to 20% by weight, based on the weight of the polymer to be dispersed.

3,397,167
POLYMER STABILIZATION WITH 1,4,7,9b-TETRAAZAPHENALENE COMPOUNDS
Jerry T. Gruver, Bartlesville, Okla., assignor to Phillips Petroleum Company, a corporation of Delaware
No Drawing. Filed June 29, 1964, Ser. No. 378,938
9 Claims. (Cl. 260—33.6)

Stabilization of polymers including carbon black containing rubbers with 1,4,7,9b-tetraazaphenalene compounds as antioxidants.

3,397,168
THERMOPLASTIC EXHIBITING HIGH VISCOSITY AT THEIR DECOMPOSITION TEMPERATURES
Irvin R. Kramer and Eric L. Strauss, Baltimore, Md., assignors to Martin-Marietta Corporation, New York, N.Y., a corporation of Maryland
Filed Dec. 17, 1962, Ser. No. 244,980
12 Claims. (Cl. 260—37)

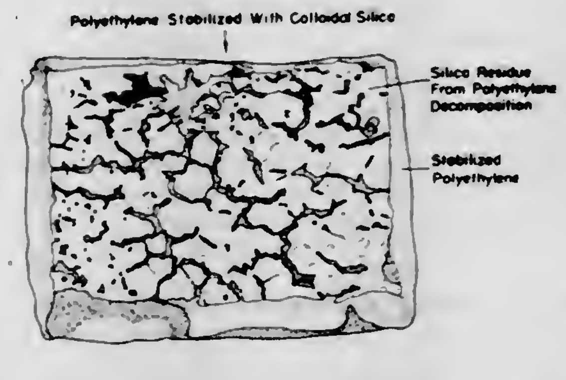

1. A composite ablating heat shield comprising a porous ceramic material having a porosity of at least 67% by volume having the walls of the pores coated with a thermoset resin and having its pores impregnated with a thermoplastic resin stabilized with about 5 to 20% by weight based upon the thermoplastic resin of finely divided colloidal silica.

3,397,169
ABRASION-RESISTANT MINERAL-FILLED THERMOSETTING MOLDING COMPOSITION
Robert E. Wilkinson, Lafayette, Ind., assignor to Rostone Corporation, Lafayette, Ind., a corporation of Indiana
Filed Apr. 15, 1964, Ser. No. 360,038
12 Claims. (Cl. 260—37)

Mineral-filled thermosetting molding compositions having improved abrasion resistance. The addition of up to 10% polyethylene or other polyolefin greatly improves the abrasion resistance of conventional molding compositions containing 15% to 60% thermosetting resin, 40% to 85% mineral filler of which 50% may be fiberglass or other fibrous reinforcement. The addition is especially applicable with free radical initiated polymers, particularly polyester resins and epoxy-polybutadiene resins, with which it cross links. In some cases flexure strength is also slightly improved.

3,397,170
BLACK ACETAL RESIN COMPOSITIONS
Robert Fourcade, Gosnay, and Thérèse Van De Walle, Lievin, France, assignors to Houilleres du Bassin du Nord & du Pas-de-Calais, Douai, Nord, France, a French establishment
No Drawing. Filed Nov. 3, 1964, Ser. No. 408,691
Claims priority, application France, Nov. 4, 1963, 952,555
1 Claim. (Cl. 260—37)

High molecular weight polyoxymethylene compositions in which is incorporated from 0.1 to 1.5% by weight

of carbon black and from 0.2 to 2.0% by weight of diphenylamine or N-phenyl-beta-naphthylamine.

3,397,171
POLYAMIDE FIBERS CONTAINING KAOLINITE AND PROCESS OF PREPARATION
Ralph K. Iler, Wilmington, Del., assignor to E. I. du Pont de Nemours and Company, Wilmington, Del., a corporation of Delaware
No Drawing. Continuation-in-part of application Ser. No. 273,852, Apr. 18, 1963. This application July 27, 1967, Ser. No. 656,345
4 Claims. (Cl. 260—37)

Polycarbonamide fibers possessing improved friction properties are prepared through incorporation of kaolinite platelets specified dimension and certain heat stable deflocculant.

3,397,172
PROCESS FOR THE PREPARATION OF POLYACROLEIN GELS AND PROCESS FOR IMPROVING THE PROPERTIES AND SEALING OF SOILS, SOIL FORMATIONS, STRUCTURES, STRUCTURAL ELEMENTS AND STRUCTURAL MATERIALS
Wilhelm Alfons Schuler, Bad Homburg vor der Hohe, Erich Bäder and Karl-Heinz Rink, Hanau am Main, and Wolfgang Weigert, Offenbach am Main, Germany, assignors to Deutsche Gold- und Silber-Scheideanstalt vormals Roessler, Frankfurt am Main, Germany
No Drawing. Filed Feb. 17, 1964, Ser. No. 345,094
Claims priority, application Germany, Feb. 16, 1963, D 40,906; Sept. 6, 1963, D 42,418
34 Claims. (Cl. 260—41)

Gels are produced from polymers of acrolein having a molecular weight of at least 1×10^3 and containing at least 0.1 wt. percent of SO_2 in the form of SO_3H or SO_3M groups, M being alkali or alkaline earth metal or ammonium, obtained either (1) by polymerization of an acrolein with the aid of an adduct of a polymer and a sulfurous acid compound as catalyst, or (2) by polymerization of acrolein with SO_2, if desired in the present of an inert medium, followed by a curing time, or (3) by polymerization of acrolein with a radical or ionic catalyst free of SO_2 or alkali metal or alkaline earth metal bisulfite and treatment with SO_2 or alkali metal or alkaline earth metal bisulfite followed by a curing time, by treatment of such polymers in an inert medium such as water or alcohols with a basic substance such as alkali metal and alkaline earth metal hydroxides, alkali metal carbonates, tertiary alkali metal phosphates, and amines. Use of such gels to reduce water permeability of water permeable but water insoluble porous solid material.

3,397,173
STABLE CHLOROPRENE-SULFUR COPOLYMER
John Wilfred Collette, Wilmington, Del., and Robert William Keown, Londonderry, Northern, Ireland, assignors to E. I. du Pont de Nemours and Company, Wilmington, Del., a corporation of Delaware
No Drawing. Filed Mar. 10, 1964, Ser. No. 350,652
5 Claims. (Cl. 260—45.9)

A process improvement whereby stable, processable chloroprene-sulfur copolymers can be prepared by the polymerization of chloroprene and sulfur in an aqueous emulsion to form a latex from which the polymer is isolated; which improvement comprises (1) conducting said polymerization in the presence of (a) 0.25 to 0.45 part of sulfur, per 100 parts of monomer, and (b) an amount of dialkyl xanthogen disulfide equivalent to 0.25 to 0.45 part of diethyl xanthogen disulfide, said alkyl radicals having from 1 to 8 carbon atoms; and (2) adding to the latex at least 0.25 part, per 100 parts of polymer, of an antioxidant selected from the group consisting of secondary aromatic amines and phenolic antioxidants.

3,397,174
STABILIZING HALOGENATED COPOLYMERS
Paul Thomas Parker and Fred J. Buchmann, Baton Rouge, La., assignors to Esso Research and Engineering Company, a corporation of Delaware
No Drawing. Filed Sept. 10, 1964, Ser. No. 395,620
2 Claims. (Cl. 260—45.9)

1. A process for stabilizing while heating above 200° F. in the absence of other curing agents, a halogenated copolymer of a major proportion of isobutylene and a minor proportion of an unsaturated hydrocarbon chosen from the group consisting of butadiene, isoprene, methylcyclopentadiene, and divinyl benzene and mixtures thereof and having a halogen content of at least 0.5 wt. percent and a mole percent unsaturation of at least 1.0 which comprises adding to said halogenated copolymer prior to said heating 0.05 to 10 wt. percent of an aliphatic amine chosen from the group consisting of n-butylamine, diethylamine and trimethyllylamine.

3,397,175
RIGID POLYVINYL CHLORIDE
Robert C. Slagel, Burnsville, and Leonard A. Tushaus, Minneapolis, Minn., assignors to Ashland Oil & Refining Company, Ashland, Ky., a corporation of Kentucky
No Drawing. Filed Mar. 7, 1966, Ser. No. 532,095
11 Claims. (Cl. 260—45.85)

Properties of rigid polyvinyl chloride, such as its impact strength, are improved by incorporating therein a minor amount of certain Diels-Alder adducts of hexahalocyclopentadiene and a compound selected from the group of cycloolefins, vinyl aromatics, or monoethylenically unsaturated carboxylic acid derivatives, or carboxylic acid ester derivatives of adducts of hexahalocyclopentadiene with acyclic olefinic alcohols.

3,397,176
TWO-STEP PROCESS FOR PREPARING ALKYD RESINS FROM GLYCIDYL ESTERS OF ALPHA-BRANCHED MONOCARBOXYLIC ACIDS, POLYHYDROXY COMPOUNDS AND PHTHALIC ANHYDRIDE
Jacques J. J. Drost, Amsterdam, Netherlands, assignor to Shell Oil Company, New York, N.Y., a corporation of Delaware
No Drawing. Continuation-in-part of application Ser. No. 90,615, Feb. 21, 1961. This application June 10, 1966, Ser. No. 556,564
Claims priority, application Netherlands, Feb. 29, 1960, 248,912
6 Claims. (Cl. 260—47)

1. A two-step process for preparing stable alkyd resins which comprises first preparing a hydroxyl-containing intermediate resin and then reacting said intermediate resin in an inert atmosphere at 210° C. to 270° C. with a member of the class consisting of polycarboxylic acids and polycarboxylic acid anhydrides, said intermediate resin being prepared by reacting at a temperature between 80° C. and 220° C. under an inert atmosphere, (1) a diglycidyl ether of a polyhydric phenol and alpha-branched, saturated, aliphatic monocarboxylic acids containing from 9 to 19 carbon atoms, the ratio of epoxy groups to carboxyl groups being in the range of from about 1:0.8 to about 1:1.2 or (2) a polyhydric compound selected from the group consisting of polyhydric phenols and aliphatic polyols and glycidyl esters of alpha-branched, saturated, aliphatic monocarboxylic acids containing from 9 to 19 carbon atoms in the acid portion of the molecule, the ratio of epoxy groups to hydroxyl groups being in the range of from about 0.5:1 to 1:1.2, the ratio of the hydroxyl groups in the intermediate resin to the carboxyl groups in the polycarboxylic compounds being in the ratio of from 1.1:1 to 2.0:1.

3,397,177
CURING AGENT COMPOSITION AND USE IN CURING POLYEPOXIDES
Ralph E. Stolton, Surbiton, England, assignor to Shell Oil Company, New York, N.Y., a corporation of Delaware
No Drawing. Filed Oct. 6, 1966, Ser. No. 584,676
Claims priority, application Great Britain, Feb. 2, 1966, 4,589/66
19 Claims. (Cl. 260—47)

1. A process for curing a polyepoxide having more than one vic-epoxy group having an average number of vic-epoxy groups per molecule of more than one which comprises contacting the epoxy resin with an aromatic polyamine which contains in its molecular structure primary and/or secondary amino groups in the presence of a polyalkylene sulfone and a cure accelerator, said cure accelerator comprising salicyclic acid and/or lactic acid.

3,397,178
HARDENABLE EPOXY RESIN COMPOSITIONS
William E. Shackelford and Warren J. Fullen, Kankakee, Ill., assignors to General Mills, Inc., a corporation of Delaware
No Drawing. Filed Oct. 13, 1966, Ser. No. 586,356
21 Claims. (Cl. 260—47)

1. A hardenable composition comprising a mixture of (1) an epoxy resin having a plurality of 1,2-epoxide groups and (2) a derivative of an organic isocyanate and a polyamine having at least one free secondary amine group and at least two primary amine groups, the said primary amine groups being blocked by aldimine or ketimine groups, said derivative having been prepared by reacting about equivalent amounts of the polyamine with the isocyanate, the equivalents being based on the free secondary amine groups of the polyamine and the isocyanato groups of the isocyanate.

3,397,179
PURIFICATION OF CHLOROMETHYLAROMATIC POLYMERS BY PERCHLOROETHYLENE EXTRACTION
Harold H. Roth, Bay City, Mich., assignor to The Dow Chemical Company, Midland, Mich., a corporation of Delaware
No Drawing. Filed May 24, 1967, Ser. No. 640,809
6 Claims. (Cl. 260—47)

Low molecular weight chloromethylaromatic materials are removed from soluble essentially linear chloromethylaromatic polymers by extraction with perchloroethylene from an insoluble complex of the polymer and perchloroethylene.

3,397,180
PROCESS FOR PREPARING 1-FLUOROVINYL METHYL KETONE AND COPOLYMERS OF THE SAME
John Andrew Sedlak and Ken Matsuda, Stamford, Conn., assignors to American Cyanamid Company, Stamford, Conn., a corporation of Maine
No Drawing. Filed Aug. 31, 1964, Ser. No. 393,354
3 Claims. (Cl. 260—63)

This invention relates to 1-fluorovinyl methyl ketone and polymers produced therefrom. Still more particularly, this invention relates to 1-fluorovinyl methyl ketone, a method for the production thereof and polymers produced therefrom.

3,397,181
COPOLYMERIZATION OF TRIOXANE WITH AN EPOXY-CONTAINING COMONOMER IN THE PRESENCE OF FORMALDEHYDE
George W. Halek, New Providence, and Frank M. Berardinelli, South Orange, N.J., assignors to Celanese Corporation, New York, N.Y., a corporation of Delaware
No Drawing. Continuation-in-part of application Ser. No. 353,588, Mar. 20, 1964. This application Mar. 8, 1967, Ser. No. 621,448
8 Claims. (Cl. 260—67)

Trioxane is copolymerized with an epoxy-containing comonomer in the presence of formaldehyde in order to reduce the induction period.

3,397,182
POLYOXYMETHYLENE-TYPE RESINS AND PROCESS FOR THEIR PRODUCTION
Robert Charles, Lens, and Paul Le Brasseur, Bully-les-Mines, France, assignors to Ethylene-Plastique, Paris, France, a French society
Filed Apr. 15, 1965, Ser. No. 448,504
Claims priority, application Great Britain, Apr. 22, 1964, 16,660/64
5 Claims. (Cl. 260—67)

Polyoxymethylene resins are formed by heating a charge consisting essentially of a cyclic aldehyde compound, particularly trioxane, in the presence of a catalyst at a temperature above 130° C. and at a pressure of at least 200 atmospheres.

3,397,183
METHOD FOR PRODUCING CRYSTALLINE ALDEHYDE COPOLYMERS
Atsushi Tanaka, Iruma-gun, Yukio Hozumi, Oi-mura, Iruma-gun, and Koichi Hatada, Habikino-shi, Osaka-fu, Japan, assignors to Dai Cellu Kabushiki Kaisha, Osaka, Japan
Filed Apr. 20, 1964, Ser. No. 361,198
Claims priority, application Japan, Apr. 30, 1963, 38/22,244
12 Claims. (Cl. 260—67)

A method of copolymerizing either two or three aliphatic aldehydes to produce isotactic crystalline aldehyde copolymers wherein the copolymerization is effected in the presence of novel catalysts of the formula $R_mMe(NR'_2)_n$, in which R and R' are alkyl, cycloalkyl or aryl groups, Me is a metal of Groups II and III of the Periodic Table having a valency of $(m+n)$, and m and n are each either 1 or 2.

3,397,184
POLYURETHANE PLASTICS
Wolfgang Heydkamp, Leverkusen, Wilhelm Kallert, Cologne-Stammheim, Erwin Müller, Leverkusen, and Helmut Freytag, Cologne-Stammheim, Germany, assignors to Farbenfabriken Bayer Aktiengesellschaft, Leverkusen, Germany, a German corporation
No Drawing. Filed Mar. 3, 1965, Ser. No. 436,950
Claims priority, application Germany, Mar. 7, 1964, F 42,241
11 Claims. (Cl. 260—77.5)

Polyurethane plastics are prepared by reacting an organic polyisocyanate, an organic compound having a molecular weight of at least 600 and containing active hydrogen atoms and a glycol having a molecular weight less than 460 and having the formula

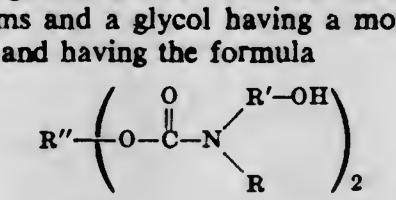

or

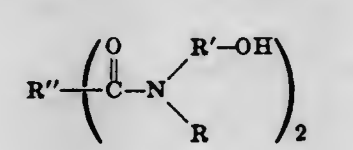

where R is a monovalent organic radical, R' is a divalent aliphatic radical having from 2 to 4 carbon atoms, and R'' is a divalent organic radical that is the residue remaining after the removal of the carboxyl groups of dicarboxylic acid or the residue remaining after the removal of the hydroxyl groups from an organic diol.

3,397,185
ANIONIC POLYMERIZATION OF LACTAMS WITH A CARBONATE DIESTER CONTAINING N-HETEROCYCLIC SUBSTITUENT AS PROMOTER
Marvin T. Tetenbaum, Petersburg, Va., assignor to Allied Chemical Corporation, New York, N.Y., a corporation of New York
No Drawing. Filed Feb. 24, 1964, Ser. No. 347,056
18 Claims. (Cl. 260—78)

1. In a process for anionically polymerizing with an anionic catalyst and under anhydrous conditions lactams the improvement which comprises providing as promoter of the polymerization at least one carbonate diester of the formula

$$R_1O\overset{O}{\overset{\|}{C}}OR_2$$

wherein at least one of the ester radicals designated R_1 and R_2 in the formula is of the group consisting of (a) radicals in which a carbon atom of the radical is linked to an oxy oxygen atom of the carbonate radical, which carbon atom in turn is bonded by a double bond to a nitrogen atom in the ester radical; and (b) radicals in which a carbon atom of the radical is linked to an oxy oxygen atom of the carbonate radical, said carbon atom being in one of the positions 2- and 4- in a 6-membered aromatic heterocyclic ring wherein nitrogen is in the 1-position which heterocyclic ring contains, in addition to the above specified carbon and nitrogen atoms, only atoms selected from the group consisting of carbon, nitrogen, oxygen and sulfur.

3,397,186
TRIAMINOGUANIDINIUM SALTS OF 5 - VINYL TETRAZOLE POLYMERS AND A METHOD FOR THEIR PREPARATION
Robert Edward Torley, Wilton, and George Sidney Sprague, Stamford, Conn., assignors to American Cyanamid Company, Stamford, Conn., a corporation of Maine
No Drawing. Filed Apr. 12, 1966, Ser. No. 543,488
4 Claims. (Cl. 260—78.4)

Triaminoguanidinium salts of 5-vinyltetrazole polymers and a method for their preparation are disclosed.

3,397,187
RESINS CONTAINING THE REPEATING BENZOTHIAZOLE STRUCTURE
William D. Mecum, Wyckoff, N.J., assignor to Abex Corporation, New York, N.Y., a corporation of Delaware
No Drawing. Filed Dec. 30, 1966, Ser. No. 606,039
3 Claims. (Cl. 260—79)

Carboxylated polybenzothiazole resin rendered soluble, as in dimethylacetamide, by reacting carboxyl potentials in increments with polybenzothiazole resin while cycling the temperature during reaction.

3,397,188
POLY[PHENYLENE(DIFLUOROMETHYLENE)SULFIDE]
Harry A. Smith, Midland, Mich., assignor to The Dow Chemical Company, Midland, Mich., a corporation of Delaware
No Drawing. Filed Jan. 26, 1967, Ser. No. 611,838
1 Claim. (Cl. 260—79)

The compositions are of the class of poly[phenylene-(difluoromethylene)sulfide] having recurring units of the structure

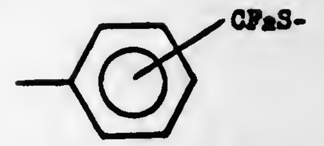

useful as a thermally stable laminating or molding resin. The process for making the composition employs a single aromatic compound, a sodium, potassium, lithium, or copper salt of an α,α,α-trifluoro-m(or p)-toluenethiol, which homopolymerizes to yield the polymer.

3,397,189
POLYMERIC SULFIDES
John G. Erickson, Stillwater, Minn., assignor to Minnesota Mining and Manufacturing Company, St. Paul, Minn., a corporation of Delaware
No Drawing. Continuation-in-part of applications Ser. No. 343,142 and Ser. No. 343,147, Feb. 6, 1964. This application June 7, 1967, Ser. No. 644,076
7 Claims. (Cl. 260—79)

Novel vinyl- or sulfhydryl-terminated polymers capable of chain extension or other reaction to give block copolymers are provided having pluralities of ester groups and hetero atoms in the back-bone chain. At least some of the hetero atoms are sulfur.

3,397,190
POLYMERS OF CARBONAMIDES CONTAINING SULFONAMIDE GROUPS
Rosemarie Toepfl, Basel, and Arthur Maeder, Therwil, Switzerland, assignors to Ciba Limited, Basel, Switzerland, a Swiss company
No Drawing. Filed May 16, 1966, Ser. No. 550,147
Claims priority, application Switzerland, May 17, 1965, 6,839/65
10 Claims. (Cl. 260—79.3)

New polymerization products are provided which are obtained by polymerizing 5–100% of the compound of the general formula

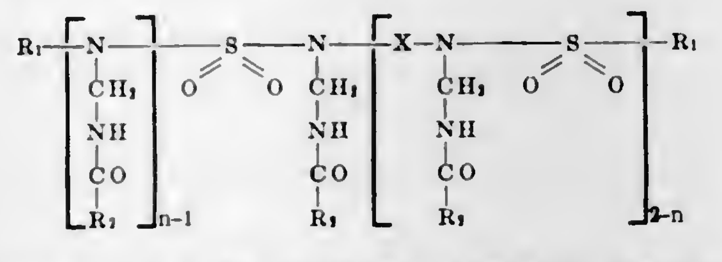

where $n=1$ or 2, R_1 represents an alkyl, aryl, alkaryl or aralkyl radical, or when $n=2$ a hydrogen atom, R_2 represents an ethylenically unsaturated residue containing at most 3 carbon atoms, and X represents an alkylene or arylene radical, with 95–0% of another copolymerizable ethylenically unsaturated monomeric compound.

The polymerization product of this invention may be used to prepare shaped objects, coatings on nonporous materials and binders, and are especially useful for impregnating or coating porous materials such as textiles, paper and leather.

3,397,191
FLUOROCARBON ETHERS
Richard Beckerbauer, Wilmington, Del., assignor to E. I. du Pont de Nemours and Company, Wilmington, Del., a corporation of Delaware
No Drawing. Filed June 2, 1965, Ser. No. 461,611
18 Claims. (Cl. 260—80.3)

Divinyl fluorocarbon ethers of the formulas

$$CF_2{=}CF{-}O{(}CF_2CF_2O{)}_nCF{=}CF_2$$

and

$$CF_2{=}CF{-}O{(}CF_2{)}_mO{-}CF{=}CF_2$$

wherein n and m are integers, including mixtures thereof, of from 2 to 20 can be converted into a divinyl oligomer of said divinyl ethers of the formulas

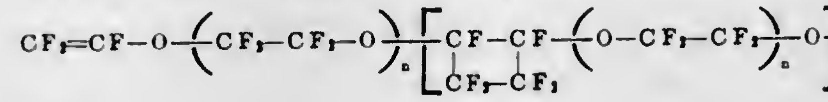

and

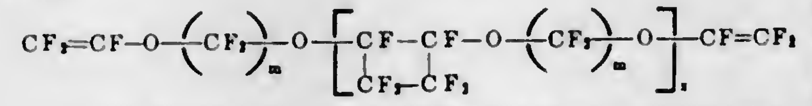

respectively, wherein x is an integer of from 1–10 by heating said divinyl ether at a temperature of about 100–200° C. in an inert atmosphere under pressure of 1000–5000 atmospheres under conditions which minimize the presence of free radicals. The divinyl fluorocarbon ether oligomers produced can be reacted to form a highly cross-linked thermoset resin.

3,397,192
ALKOXY- AND ARYLOXY-ETHYLATED POLYMERS OF HETEROCYCLIC N-VINYL MONOMERS AND PROCESS OF PREPARING THE SAME
Frederick Grosser, Midland Park, and Ashot Merijan, Clark, N.J., assignors to GAF Corporation, a corporation of Delaware
No Drawing. Filed May 18, 1966, Ser. No. 550,954
7 Claims. (Cl. 260—80.72)

Alkoxy- and aryloxy-ethylated polymers of heterocyclic N-vinyl monomers are provided which are insoluble in water but soluble in a variety of polar and nonpolar organic solvents and which are obtained by simultaneously polymerizing and alkoxy- or aryloxy-ethylating by heating one mole of a monomer of a 5- or 7-membered heterocyclic N-vinyl monomer having a carbonyl function adjacent to the nitrogen in its heterocyclic moiety or one mole of a comonomer mixture containing from 5 to 99 mole percent of said heterocyclic N-vinyl monomer and from 1 to 95 mole percent of a monoethylenically unsaturated polymerizable monomer with 0.05 to 10 moles of vinyl ether in solution of an inorganic solvent common to said monomer, comonomer mixture and vinyl ether in the presence of 0.025 to 0.2 mole of organic peroxide catalyst per mole of vinyl ether at a temperature of from about 80° to 200° C.

3,397,193
ACRYLIC ELASTOMER
Romeo Raymond Aloia and Samuel Kaizerman, New Brunswick, N.J., assignors to American Cyanamid Company, Stamford, Conn., a corporation of Maine
No Drawing. Filed Oct. 21, 1964, Ser. No. 405,579
10 Claims. (Cl. 260—80.81)

A vulcanizable elastomeric terpolymer having good low temperature flexibility and oil resistance properties. The terpolymer comprises at least 90% of a mixture of butyl acrylate and 2-cyanoethylacrylate, of which between 5% and 50% is 2-cyanoethylacrylate, polymerized with a monomer containing at least one vinyl group and at least one chlorine atom capable of acting as a cross-linking site.

3,397,194
PROCESS FOR POLYMERIZATION OF ALPHA-OLEFINS USING CCl_4 AND AIR, WITH (1) LOW TEMPERATURE HIGH IONIZING RADIATION OR (2) IRON OR NIOBIUM HALIDES
Harold E. Swift, Gibsonia, Pa., assignor to Gulf Research & Development Company, Pittsburgh, Pa., a corporation of Delaware
No Drawing. Filed July 15, 1965, Ser. No. 472,347
25 Claims. (Cl. 260—85.3)

A process for the polymerization of olefins, particularly alpha-olefins, having at least four carbon atoms at reduced temperatures using a new catalyst system. The catalyst comprises a halogenated derivative of methane such as carbon tetrachloride plus an organo-aluminum component having at least one carbon to metal bond such as aluminum triethyl. Polymerization occurs at reduced temperatures using irradiation and/or when the catalyst system comprises in addition an iron or niobium halide. Increased yields of polymer are obtained by initially contacting the reaction mixture with an olefin having two to three carbon atoms per molecule.

3,397,195
PREPARATION OF α-OLEFIN POLYMERS IN FINELY DIVIDED FORM
Carl A. Lukach, Wilmington, and Harold M. Spurlin, Cooper Farm, Del., assignors to Hercules Incorporated, a corporation of Delaware
No Drawing. Filed Dec. 18, 1964, Ser. No. 419,607
12 Claims. (Cl. 260—93.7)

A process is taught whereby α-olefins are polymerized directly to particles of less than 10μ average size using an organometallic catalyst. Two embodiments of the process are taught. In one embodiment the catalyst is prepared by reducing titanium tetrachloride with an organometallic compound at a low temperature under agitation in the presence of an abrading solid material. The other embodiment comprises polymerizing the desired α-olefin under agitation in the presence of an abrading solid material using as catalyst a titanium compound prepared by reducing titanium tetrachloride at a low temperature with an organometallic compound but not in the presence of the abrasive. The preferred abrading material is sand.

3,397,196
THREE-COMPONENT CATALYST CONTAINING POLYMERIC METHYL HALIDE METAL REACTION PRODUCT AND TITANIUM COMPOUND FOR OLEFIN POLYMERIZATION
Newton H. Shearer, Jr., and Harry W. Coover, Jr., Kingsport, Tenn., assignors to Eastman Kodak Company, Rochester, N.Y., a corporation of New Jersey
No Drawing. Continuation of application Ser. No. 473,523, July 20, 1965. This application Mar. 20, 1967, Ser. No. 624,626
13 Claims. (Cl. 260—93.7)

A catalyst for the preparation of solid crystalline polymer from alpha-olefins containing 3 to 10 carbon atoms which comprises the polymer resulting from the reaction of a methylene halide with a metal from the group consisting of aluminum, zinc and magnesium, a titanium compound and an ester.

3,397,197
STREPTOMYCIN REDUCTION PROCESS
Edwin H. Makepeace, Jr., New London, Conn., assignor to Chas. Pfizer & Co., Inc., New York, N.Y., a corporation of Delaware
No Drawing. Filed Nov. 2, 1964, Ser. No. 408,411
6 Claims. (Cl. 260—210)

Reducing streptomycin or hydroxystreptomycin by adsorbing on a solid matrix, e.g., carbon or a cation exchange resin, and treating the adsorbate at an alkaline pH with an alkali metal borohydride or trimethoxyborohydride to produce the corresponding dihydrostreptomycin-type compound.

3,397,198

DEGRADED CELLULOSE AND ITS MANUFACTURE

Dahlia S. Greidinger, 98 Hatishbi St., and Herbert Bernstein, 58 Panorama Road, both of Haifa, Israel, and Shimon Epstein, 15 Elon St., Kiryat Bialik, Israel

No Drawing. Filed May 26, 1965, Ser. No. 459,096

Claims priority, application Israel, June 18, 1964, 21,562

9 Claims. (Cl. 260—212)

1. Degraded cellulose consisting of very finely divided amorphous particles insoluble in water but capable of forming colloidal aqueous dispersions, said cellulose being made by a process comprising dissolving cellulosic matter within a time not exceeding 10 minutes at a temperature of about 35° to 45° C. in an aqueous sulfuric acid medium containing 65% to 75% by weight of H_2SO_4, then diluting the solution with water, and finally separating from the acidic aqueous liquor the precipitate of degraded cellulose thereby formed.

3,397,199

NITROTHENYLIDENEAMINO COMPOUNDS

George L. Dunn, Willingboro, N.J., assignor to Smith Kline & French Laboratories, Philadelphia, Pa., a corporation of Pennsylvania

No Drawing. Filed Dec. 2, 1964, Ser. No. 415,453

19 Claims. (Cl. 260—240)

1-(5-nitro-2-thenylideneamino)pyrimidines and imidazolines are prepared by reaction of 5-nitrothiophene-2-carboxaldehyde with a 1-aminopyrimidine or imidazolidine. The products possess anti-trichomonal activity.

3,397,200

NITROPYRROLYLMETHYLENEAMINOURACILS

George L. Dunn, Willingboro, N.J., assignor to Smith Kline & French Laboratories, Philadelphia, Pa., a corporation of Pennsylvania

No Drawing. Filed Feb. 3, 1965, Ser. No. 430,171

8 Claims. (Cl. 260—240)

1 - (5 - nitro - 2 - pyrrolylmethyleneamino) - 5,6 - dihydrouracils, optionally substituted on the pyrrole and/or pyrimidine rings, are prepared by reaction of an appropriately substituted 1-amino-dihydrouracil with a 5-nitropyrrole-2-carboxaldehyde. The products possess antitrichomonal activity.

3,397,201

5,6 - DIHYDRO - 2 - (SUBSTITUTED) - 6 - PHENYL-3,4,5 - TRIMETHYL - 4H - 1,3,4 - OXADIAZINIUM HALIDES

Donald L. Trepanier, Indianapolis, Ind., assignor to The Dow Chemical Company, Midland, Mich., a corporation of Delaware

No Drawing. Filed Apr. 8, 1966, Ser. No. 541,088

2 Claims. (Cl. 260—244)

5,6 - dihydro - 2 - (substituted)-6-phenyl-3,4,5-trimethyl-4H-1,3,4-oxadiazinium halides are prepared by the reaction of a 4,5 - dimethyl - 2 - (substituted)-6-phenyl-5,6-dihydro-4H-1,3,4-oxadiazine compound with methyl bromide or methyl iodide. Typical substituents in the 2 position are halophenyl, alkylphenyl and alkoxyphenyl. The compounds are useful as pesticides.

3,397,202

11,11a - DIHYDRO - 11a - HYDROXY - 2 - (LOWER ALKYL) - 11 - R_3 - 6H - BENZO[5,6]CYCLOHEPT [1,2,3-cd]INDOLIN - 1,6 - DIONES AND INTERMEDIATES FOR THEIR PREPARATION

Janis Plostnieks, Philadelphia, Pa., assignor to McNeil Laboratories, Inc., a corporation of Pennsylvania

No Drawing. Continuation-in-part of application Ser. No. 502,473, Oct. 22, 1965. This application May 2, 1967, Ser. No. 635,403

8 Claims. (Cl. 260—247.2)

The compounds are of the class of indolin-1,6-dione derivatives useful as hypotensive agents. Also included are indolin-1,6-dione epoxides useful as intermediates.

3,397,203

METHODS OF PRODUCING CHLOROCYANURIC ACIDS

William F. Symes, Webster Groves, and Steve Vazopolos, St. Louis, Mo., assignors to Monsanto Company, St. Louis, Mo., a corporation of Delaware

No Drawing. Filed Aug. 25, 1966, Ser. No. 574,941

12 Claims. (Cl. 260—248)

1. A process for reducing the biuret content of cyanuric acid containing substantial quantities of biuret as an impurity therein which comprises (1) reacting an aqueous solution containing a metallic compound selected from the group consisting of alkali metal hydroxides and alkaline earth metal hydroxides, oxides, and carbonates with said cyanuric acid to form a metal salt cyanurate solution; and (2) contacting said cyanurate solution with a chlorine-liberating compound for a sufficient period of time to substantially decompose the biuret in said cyanurate solution without materially chlorinating the said cyanurate while continuously maintaining the pH of said cyanurate solution at not less than 10.5.

5. In a process for preparing a polychlorocyanuric acid compound which comprises (1) reacting an aqueous solution containing a metallic compound selected from the group consisting of alkali metal hydroxides and alkaline earth metal hydroxides, oxides, and carbonates with cyanuric acid containing at least 200 parts per million of biuret as an impurity therein, to form a metal salt cyanurate solution and (2) subsequently contacting said cyanurate solution with a sufficient quantity of chlorine at a temperature less than 50° C. to form, at a pH less than 6.5, the aforementioned polychlorocyanuric acid compound, the improvement which comprises contacting said cyanurate solution with a chlorine-liberating compound prior to step (2) for a sufficient period of time to substantially decompose the biuret in said cyanurate solution without materially chlorinating the said cyanurate while continuously maintaining the pH of said cyanurate solution at not less than 10.5.

3,397,204

PRODUCTION OF HALOHYDROCARBYLOXY-SYM-TRIAZINES

Van R. Gaertner, Ballwin, Mo., assignor to Monsanto Company, St. Louis, Mo., a corporation of Delaware

No Drawing. Continuation-in-part of application Ser. No. 192,986, May 7, 1962. This application Oct. 21, 1965, Ser. No. 500,343

5 Claims. (Cl. 260—248)

A process for preparing (halohydrocarbyloxy)-sym-triazines particularly useful as sizing agents for paper and textile waterproofing agents comprising reacting an epoxide or ether or thioether epoxide with a cyanuryl halide and recovering the resulting (halohydrocarbyloxy)-sym-triazine having halogen atoms bonded to the ring carbon atoms. Friedel-Crafts catalyst are useful in a process. A suitable temperature range is 25 to 150 degrees centigrade for the reaction period.

3,397,205

ARYL-1,3,5-TRIAZINES

Christian Luethi, Munchenstein, Hans Rudolf Biland, Basel, and Max Duennenberger, Frenkendorf, Basel-Land, Switzerland, assignors to Ciba Limited, Basel, Switzerland, a Swiss company

No Drawing. Filed Feb. 8, 1966, Ser. No. 525,856

Claims priority, application Switzerland, Feb. 19, 1965, 2,312/65

11 Claims. (Cl. 260—248)

New aryl-1,3,5-triazines are provided which may be represented by the formula

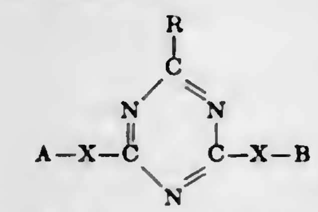

where R represents a possibly substituted 6-membered aromatic ring system which contains a hydroxyl group in ortho-position to the bond with the triazine ring and which may be annellated with a further 5-membered or 6-membered aromatic ring system and is bound with the triazine ring through a carbon atom; X represents a divalent hetero atom grouping such as —O—, —S— or —NQ— (in which Q stands for a hydrogen atom or a lower aliphatic radical bound through a carbon atom with nitrogen); A and B each represents an alkyl, alkenyl, cycloalkyl, aralkyl, phenyl or naphthyl group which contains up to 20 carbon atoms and, if desired, these groups may be further substituted.

The compounds of this invention are especially useful as stabilizers to conteract the effects of light, atmospheric oxygen and heat on certain high molecular weight organic materials.

3,397,206

PRODUCTION OF CHLOROISOCYANURATES

Bernard H. Nicolaisen, Stamford, Conn., assignor to Olin Mathieson Chemical Corporation

Continuation-in-part of application Ser. No. 486,250, Aug. 3, 1965. This application June 28, 1967, Ser. No. 649,654

5 Claims. (Cl. 260—248)

Chloroisocyanurates are prepared by introducing liquid chlorine into a body containing cyanuric acid or a cyanurate at a point where the pressure is approximately atmospheric while maintaining an absolute pressure below 50 millimeters of mercury at another part of the said body.

3,397,207

WATER - SOLUBLE REACTIVE ANTHRAQUINONE DYESTUFFS, THEIR PREPARATION AND USE

Ian Knowles Barben and Dennis Eckersley, Manchester, England, assignors to Imperial Chemical Industries Limited, London, England, a corporation of Great Britain

No Drawing. Filed Aug. 8, 1966, Ser. No. 570,735

Claims priority, application Great Britain, Aug. 23, 1965, 36,026/65

3 Claims. (Cl. 260—249)

Reactive, water-soluble anthraquinone dyestuffs useful for colouring textiles and having the formula:

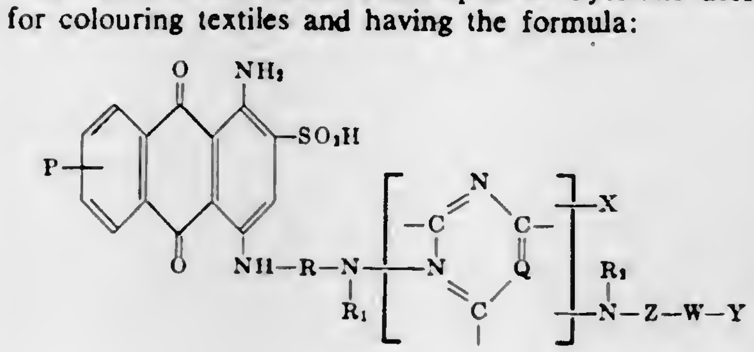

wherein R_1 and R_2 each independently represent a substituent selected from hydrogen and alkyl groups having up to 4 carbon atoms,

Q represents a group selected from nitrogen, C—Cl and C—CN,

X represents a substituent selected from chlorine, bromine and sulphonic acid,

Z is phenylene,

W represents a group selected from carbamyl, sulphone and sulphur,

Y represents a group selected from

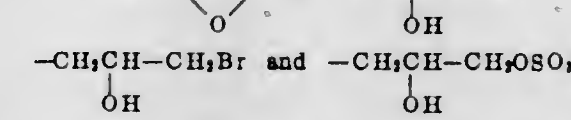

and wherein R represents a sulphophenylene radical and P represents a substituent selected from hydrogen and sulphonic acid.

3,397,208

METHOD FOR PREPARING 4-HYDROXY-6,7-DIALKOXY-3-CARBOALKOXYQUINOLINES AND NOVEL 4-CHLORO-6,7-DIALKOXY-3-CARBOALKOXYQUINOLINES USEFUL THEREIN

Harold Berman and Frank Frederick Ebetino, Norwich, N.Y., assignors to The Norwich Pharmacal Company, a corporation of New York

No Drawing. Filed Feb. 24, 1965, Ser. No. 435,091

8 Claims. (Cl. 260—287)

A method for preparing 4-hydroxy-6,7-dialkoxy-3-carboalkoxyquinolines is described which comprises reacting a dialkyl 3,4-dialkoxyanilinomethylene malonate with phosphorus oxychloride to effect ring closure of the anil. The use of excess phosphorus oxychloride results in the formation of the corresponding 4-chloro-6,7-dialkoxy-3-carboalkoxyquinolines which are converted to the 4-hydroxy compounds in acid medium.

3,397,209

3-HYDROXY-5-ISOXAZOLE-CARBOXAMIDE

André R. Gagneux and Franz Hafliger, Basel, Switzerland, assignors to Geigy Chemical Corporation, Ardsley, N.Y., a corporation of New York

No Drawing. Filed Nov. 25, 1966, Ser. No. 596,774

2 Claims. (Cl. 260—307)

1. 3-hydroxy-5-isoxazole carboxamide.
2. 3-hydroxy-5-isoxazole carboxylic acid.

3,397,210

PROCESS FOR PREPARING MALEIMIDES USING A SOLID PHASE ACIDIC ALUMINA-CONTAINING CATALYST

William A. Michalowicz, Verona, Pa., assignor to Koppers Company, Inc., a corporation of Delaware

Filed Jan. 17, 1966, Ser. No. 521,069

8 Claims. (Cl. 260—326.5)

Maleimide or substituted maleimides are produced by reacting, in vapor phase, ammonia or a primary amine with a maleic anhydride in the presence of an acidic alumina containing catalyst.

3,397,211

PROCESS FOR PREPARING 3-INDOLYL ACETIC ACIDS

George Gal, Summit, N.J., assignor to Merck & Co., Inc., Rahway, N.J., a corporation of New Jersey

No Drawing. Filed Sept. 9, 1966, Ser. No. 578,159

3 Claims. (Cl. 260—326.13)

A process for preparing 3-indolyl acetic acids, by acylating an amino cinnamic acid, followed by reaction with acetaldehyde to form the desired product. The products are useful as anti-inflammatory agents.

3,397,212
EUCALYPTOL DERIVATIVES
Raymond Valette, Epinay-sur-Seine, France, assignor to Les Laboratoires Albert Rolland, Paris, France, a French society
No Drawing. Filed July 20, 1964, Ser. No. 384,001
Claims priority, application Great Britain, July 18, 1963, 28,499/63
7 Claims. (Cl. 260—345.1)

Eucalyptol disulfonic acids of the structure

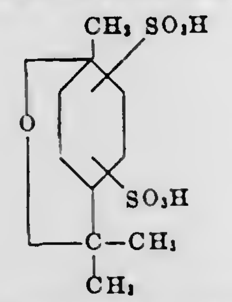

are prepared by sulfonating eucalyptol with SO_3 in the presence of dioxane. The new compounds in the form of their free acids or salts are good analeptic and antiseptic agents.

3,397,213
12 METHYL-9,11-DIHALOPROGESTERONES
Patrick A. Diassi, Westfield, N.J., assignor to E. R. Squibb & Sons, Inc., New York, N.Y., a corporation of Delaware
No Drawing. Filed Jan. 12, 1966, Ser. No. 520,050
3 Claims. (Cl. 260—397.3)

The instant disclosure relates to 9,11-dihalo-12α-methyl steroids and derivatives thereof. These compounds possess progestational activity and hence can be utilized in lieu of known progestational agents.

3,397,214
PROCESS OF REACTING TETRAALKYLALLENE WITH PALLADOUS HALIDE
Robert G. Schultz, St. Louis, Mo., assignor to Monsanto Company, St. Louis, Mo., a corporation of Delaware
No Drawing. Filed Nov. 12, 1964, Ser. No. 410,711
5 Claims. (Cl. 260—429)

Reaction of tetraalkylallene with dihalo-bis-arylcyanide palladium (II) to obtain tetraalkylallyl complexes of palladium.

3,397,215
ION EXCHANGE METHOD OF PREPARING QUATERNARY AMMONIUM COMPOUNDS
William P. Hettinger, Jr., Hinsdale, Ill., assignor to Nalco Chemical Company, Chicago, Ill., a corporation of Delaware
No Drawing. Filed Aug. 26, 1965, Ser. No. 482,909
10 Claims. (Cl. 260—429)

1. A method of preparing quaternary ammonium compounds of the following structure:

$$Q_{2x-y}MO_x$$

where Q is a quaternary ammonium radical of the structure:

where R is an alkyl radical of 1–2 carbon atoms, M is an atom of a group listed in the Periodic Table selected from the group consisting of I–B, III–A, IV–A, IV–B, VI–B, and VIII, X is an integer of 1–4 and y is the valence of said atom; which comprises the steps of contacting a cation exchange resin with a quaternary ammonium salt containing said above radical whereby said resin is put in an amine form, and subsequently contacting said amine form resin with a compound having the formula

$$L_{2x-y}MO_x$$

where M, X and y each have a significance as above stated and L is an alkali metal.

3,397,216
COORDINATION COMPLEXES OF METAL HALIDES AND PENTAVALENT PHOSPHORUS COMPOUNDS
Frank J. Welch, Charleston, and Herbert J. Paxton, Jr., Elkview, W. Va., assignors to Union Carbide Corporation, a corporation of New York
No Drawing. Filed Oct. 30, 1963, Ser. No. 319,959
28 Claims. (Cl. 260—429.5)

1. A coordination complex of a halide of a metal selected from the group consisting of antimony, tin and titanium, with a pentavalent phosphorus compound selected from the group consisting of compounds represented by the formulas:

$$R_n\overset{O}{\overset{\|}{P}}X_{(3-n)} \quad \text{and} \quad Y_2\overset{O}{\overset{\|}{P}}-(CH_2)_m-(O)_p-\overset{O}{\overset{\|}{P}}Y_2$$

wherein R is a monovalent hydrocarbon radical having from 1 to 20 carbon atoms; X is a radical selected from the group consisting of —OR, and —NR_2, wherein R is as above defined; Y is a radical selected from the group consisting of —R and —OR, wherein R is as above defined; n is an integer having a value of from 1 to 2; m is an integer having a value of from 0 to 10, and is at least 1 when p is 0; and p is an integer having a value of from 0 to 1, and is 1 when m is 0.

3. A coordination complex of a halide of a metal selected from the group consisting of antimony, tin and titanium, with a pentavalent phosphorus compound selected from the group consisting of compounds represented by the formulas:

$$R_n\overset{O}{\overset{\|}{P}}X_{(3-n)} \quad \text{and} \quad Y_2\overset{O}{\overset{\|}{P}}-(CH_2)_m-(O)_p-\overset{O}{\overset{\|}{P}}Y_2$$

wherein R is a monovalent hydrocarbon radical having from 1 to 20 carbon atoms; X is a radical selected from the group consisting of —OR, and —NR_2, wherein R is as above defined; Y is a radical selected from the group consisting of —R and —OR, wherein R is as above defined; n is an integer having a value of from 1 to 2; m is an integer having a value of from 0 to 10, and is at least 1 when p is 0; and p is an integer having a value of from 0 to 1, and is 1 when m is 0; said complex being prepared by admixing the metal halide and phosphorus compound in a ratio of from about 0.25 mole to about 10 moles of the metal halide per mole of the phosphorus compound.

3,397,217
SUBSTITUTED DITHIARSOLES AND DITHIASTIBOLES
William Lindsay Mosby, North Plainfield, and Erwin Klingsberg, Mountainside, N.J., assignors to American Cyanamid Company, Stamford, Conn., a corporation of Maine
No Drawing. Filed Aug. 3, 1965, Ser. No. 477,020
3 Claims. (Cl. 260—440)

This invention relates to organo-metallic derivatives represented by Formula I:

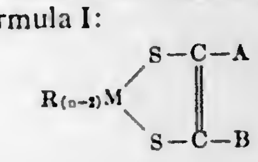

I

wherein M is a polyvalent metal selected from the group consisting of antimony, arsenic and tin; R is a monovalent hydrocarbyl radical selected from the group consisting of lower-alkyl, monocyclic and bicyclic aromatic, and monocyclic ar(lower-alkyl); n is the valence of M; A and B are independently monovalent radicals selected from the group consisting of CN, COOR, $CONH_2$, CONHR, COR and NO_2; and when M is tin, A and B are selected from the group consisting of COOR, $CONH_2$, CONHR, COR and NO_2.

3,397,218
PROCESS FOR PREPARING SODIUM METHYL ARSONATE
Paul A. Mazur, Dumont, N.J., assignor, by mesne assignments, to Shamrock Corporation, a corporation of Delaware
No Drawing. Filed June 1, 1965, Ser. No. 460,485
7 Claims. (Cl. 260—442)

1. In a process for preparing sodium methyl arsonate by methylating an aqueous sodium arsenite solution with a methylating agent under methylation conditions, the improvement which comprises conducting said methylation reaction in the presence of a water-miscible promoter composition comprising a mixture of a saturated aliphatic ketone having the following formula:

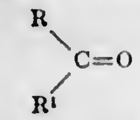

wherein R and R^1 are lower alkyl radicals containing 1 to 4 carbon atoms and a hydrocarbon material liquid under the reaction conditions and free from any reaction active substituents containing 5 to 22 carbon atoms and having a boiling point within the range from about 35° to 350° C.

3,397,219
PREPARATION OF PHOSPHORUS-CONTAINING OLEFIN POLYMERS AND SALTS THEREOF
John Frederick Ford and John Michael Wood, Sunbury-on-Thames, Middlesex, England, assignors to The British Petroleum Company Limited, London, England, a British joint-stock corporation
No Drawing. Filed Mar. 19, 1964, Ser. No. 353,269
Claims priority, application Great Britain, Mar. 29, 1963, 12,510/63, 12,512/63
11 Claims. (Cl. 260—448)

Liquid phosphorus-containing polymers useful as lubricating oil additives can be prepared by a combined phosphorylation/polymerization reaction of an alpha-olefin with a phosphorus halide in the presence of a Friedel-Crafts catalyst, the olefin being present in at least a 10:1 molar excess over the phosphorus halide, and the Friedel-Crafts catalyst being in at least a 1.5:1 molar excess over the phosphorus halide.

3,397,220
SILYLATING PROCESS AND AGENT
Johann F. Klebe, Schenectady, N.Y., assignor to General Electric Company, a corporation of New York
No Drawing. Continuation-in-part of application Ser. No. 371,095, May 28, 1964. This application Sept. 23, 1964, Ser. No. 398,781
12 Claims. (Cl. 260—448.2)

Compounds containing acidic protons are silylated by reacting the compounds containing acidic protons with a silyl compound having the formula

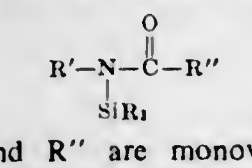

wherein R, R′ and R″ are monovalent hydrocarbon radicals, R′ is in addition hydrogen and the —SiR_3 radical and R″ in addition is hydrogen and the

$$\begin{array}{c} Z \\ | \\ -N-Z \end{array}$$

radical, wherein Z is selected from the class consisting of hydrogen, monovalent hydrocarbon radicals, and the aforesaid —SiR_3 group. The process of this reaction is useful for the separation and analysis of organic compounds containing acidic protons.

3,397,221
ORGANOSILOXANE CONTAINING CARBORANES AND PROCESS THEREFOR
Stelvio Papetti, Hamden, Conn., assignor to Olin Mathieson Chemical Corporation, a corporation of Virginia
Filed June 21, 1965, Ser. No. 465,499
9 Claims. (Cl. 260—448.2)

Silicon-containing organoborane compounds are prepared by reacting meta-carborane or para-carborane derivatives of the formula:

$$HCB_{10}H_8RR'CH$$

where R and R′ are hydrogen or alkyl, with an alkali metal alkyl to form the corresponding di(alkali metal) derivative which, in turn, is reacted with a disiloxane. The compounds of this invention react with dialkoxy silanes in the presence of ferric chloride to form high temperature resistant linear polymeric products which can be cured to yield compositions useful in high temperature and high pressure applications.

3,397,222
ALKYLSULPHATE SALTS OF 2-HOMOMYRTENYLOXY 1-DIETHYL-AMINO ETHANE
Olivier Paul Gaudin, 91 Blvd. du General Koenig, 92 Neuilly-sur-Seine, France
No Drawing. Filed May 17, 1966, Ser. No. 550,590
Claims priority, application France, Jan. 18, 1966, 46,222
3 Claims. (Cl. 260—459)

1. 2-homomyrtenyloxy 1-diethylamino ethane alkylsulphate having the formula:

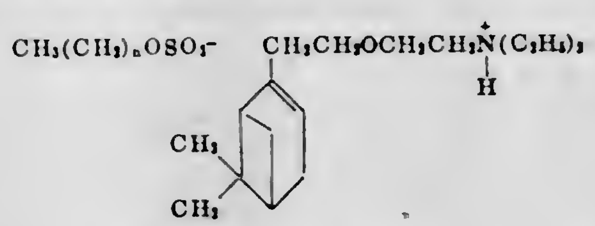

in which n is an integer within the range 7–17.

3,397,223
PREPARATION OF CYCLOPROPANE DERIVATIVES
George B. Payne, Berkeley, Calif., assignor to Shell Oil Company, New York, N.Y., a corporation of New York
No Drawing. Filed May 19, 1966, Ser. No. 551,212
11 Claims. (Cl. 260—464)

Cyclopropane derivatives having a plurality of electron-withdrawing groups as ring substituents are prepared by reaction of stabilized sulfur ylids with ethylenic linkages of olefinic reactants wherein the ethylenic linkages are activated by conjugation with an unsaturated moiety of an electron-withdrawing group.

3,397,224
PROCESS FOR THE MANUFACTURE OF ESTERS OF BENZENE DICARBOXYLIC ACID
Yasuhiro Fujita and Junichi Hijii, Ohtake-shi, Japan, assignors to Mitsui Petrochemical Industries, Ltd., Tokyo, Japan
No Drawing. Filed Nov. 13, 1964, Ser. No. 411,088
Claims priority, application Japan, Nov. 15, 1963, 38/61,166, 38/61,167
17 Claims. (Cl. 260—475)

A process for the manufacture of a β-hydroxy-alkyl ester of a benzene dicarboxylic acid by reacting a benzene dicarboxylic acid or a monoalkyl ester thereof with an alkylene oxide in an organic cyanide solvent selected from the group consisting of methyl cyanide, ethyl cyanide, propyl cyanide and benzonitrile.

3,397,225
PREPARATION OF ESTERS OF UNSATURATED ACIDS
Donald M. Fenton, Anaheim, Calif., assignor to Union Oil Company of California, Los Angeles, Calif., a corporation of California
No Drawing. Filed June 15, 1964, Ser. No. 375,342
9 Claims. (Cl. 260—486)

The invention comprises the oxidative carbonylation of a hydrocarbon olefin by contacting the olefin and carbon monoxide with an alcoholic reaction medium containing a platinum group metal and a soluble salt of a multivalent metal having an oxidation potential more positive than said platinum metal. The reaction proceeds to form the ester of an alpha,beta-unsaturated carboxylic acid having one more carbon than said olefin. A specific illustration is the formation of methyl acrylate by introducing ethylene and carbon monoxide into contact with a methanol solution of palladium chloride and cupric chloride at a pressure of about 1000 p.s.i.g. and a temperature of about 100° C.

3,397,226
PREPARATION OF ESTERS FROM OLEFINS
Donald M. Fenton, Anaheim, Calif., assignor to Union Oil Company of California, Los Angeles, Calif., a corporation of California
No Drawing. Continuation-in-part of application Ser. No. 375,342, June 15, 1964. This application Jan. 18, 1965, Ser. No. 426,382
8 Claims. (Cl. 260—486)

The invention comprises the oxidative carbonylation of hydrocarbon olefins in the presence of an alcohol reactant to produce esters of unsaturated carboxylic acids, esters of dicarboxylic acids and esters of beta-alkoxy-substituted carboxylic acids. The reaction is performed in the presence of a catalyst comprising a platinum group metal salt or chelate and a multivalent heavy metal salt which functions as a redox agent to maintain the platinum group metal in an elevated oxidation state. Oxygen is introduced into contact with the reactants to regenerate the multivalent metal salt and maintain it in an elevated oxidation state to provide a continuous process. The reaction is performed at a temperature from about 0° to 300° C. and a pressure from atmospheric to about 2500 p.s.i.g. and is preferably performed in liquid phase. In specific embodiments the invention comprises the reaction of ethylene with carbon monoxide and ethanol to produce ethyl acrylate. Byproducts also produced during the reaction include from diethyl succinate and ethyl beta-ethoxypropionate. The latter ester can be pyrolyzed to ethyl acrylate and ethanol.

3,397,227
ESTER PRODUCTION
Igor Sobolev, Orinda, Calif., assignor to Shell Oil Company, New York, N.Y., a corporation of Delaware
No Drawing. Continuation-in-part of application Ser. No. 405,858, Oct. 22, 1964. This application Nov. 9, 1967, Ser. No. 681,932
11 Claims. (Cl. 260—486)

Reaction of acyclic hydrocarbon monoalkene monocarboxylic acid, epihalohydrin and a reaction-limiting amount of trialkylamine produces 2-hydroxy-3-alkenoyloxypropyltrialkylammonium halide, useful in the production of polymeric wet end additives.

3,397,228
NOVEL PREPARATION OF BORON-CONTAINING COMPOUNDS
Arthur M. Brownstein, Morristown, N.J., assignor to Allied Chemical Corporation, New York, N.Y., a corporation of New York
No Drawing. Filed July 6, 1965, Ser. No. 469,891
7 Claims. (Cl. 260—502.3)

1. A process for the preparation of 10-hydroxy-9-oxa-10-bora anthracene which comprises reacting phenyl ether with boron tribromide in the presence of at least 0.1 mol of aluminum dust per mol fo phenyl ether and then hydrolyzing.

5. A process as claimed in claim 1 wherein at least 2 mols of boron tribromide and at least 1 mol of aluminum dust are present for each mol of phenyl ether and the reaction product contains substantial portions of 4,4'-phenoxyphenyldiboronic acid and 2,4'-phenoxyphenyldiboronic acid in addition to 10-hydroxy-9-oxa-10-bora-anthracene.

6. As a new composition of matter, 4,4'-phenoxyphenyldiboronic acid having the structural formula

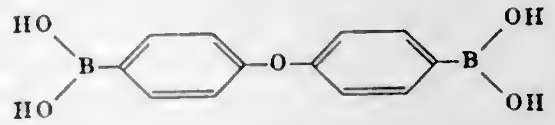

7. As a new composition of matter, 2,4'-phenoxyphenyldiboronic acid having the structural formula

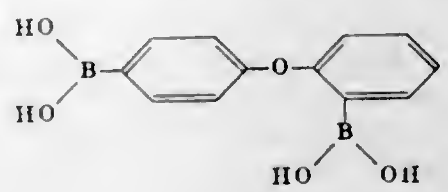

3,397,229
NITRATION OF BENZOIC ACID AND ITS CHLORINATED DERIVATIVES
Eldred Welch, Westfield, N.J., assignor to GAF Corporation, a corporation of Delaware
No Drawing. Filed Dec. 4, 1963, Ser. No. 328,061
9 Claims. (Cl. 260—515)

1. The process of mononitrating a sulfuric acid solution of a benzenoid acid selected from the class consisting of benzoic acid, monochloro-, dichloro- and trichlorobenzoic acid at a temperature of 40° to 60° C. by the addition of a mixed acid consisting of 33% nitric acid and 67% sulfuric acid and oleum containing 65% free sulfur trioxide wherein the weight ratio of total sulfuric acid to the said benzenoid acid is 3.33–4.8:1 and wherein the ratio of moles of free sulfur trioxide in the oleum to the said benzenoid acid is approximately 1:1.

3,397,230
NITRATION OF TETRACYCLINES
Robert Winterbottom, New City, Panayota Bitha, New York, and Henry Marcel Kissman, Nanuet, N.Y., assignors to American Cyanamid Company, Stamford, Conn., a corporation of Maine
No Drawing. Filed Mar. 14, 1966, Ser. No. 533,830
10 Claims. (Cl. 260—559)

1. The process of preparing compounds of the formula:

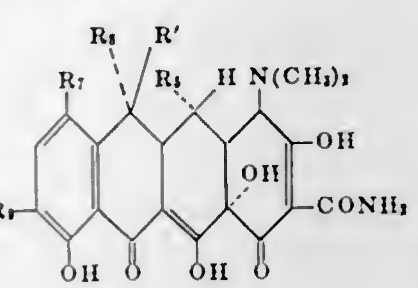

wherein R_5 is selected from the group consisting of hydrogen and hydroxy, R' is selected from the group consisting of hydrogen and hydroxy, R_6 is selected from the group consisting of hydrogen and methyl, R' and R_6 taken together is methylene, R_7 is selected from the group consisting of hydrogen and nitro and R_9 is selected from the group consisting of hydrogen and nitro with the proviso that R_7 and R_9 cannot both be hydrogen, which comprises contacting a compound of the formula:

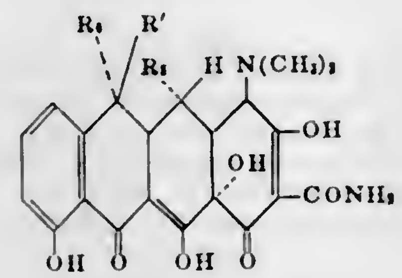

wherein R_5, R' and R_6 are as hereinabove defined, with nitronium tetrafluoroborate in a polar solvent inert to the reactants.

3,397,231
REFINING OF α-6-DEOXY-5-OXYTETRACYCLINE
James J. Korst, Old Lyme, Conn., assignor to Chas. Pfizer & Co., Inc., New York, N.Y., a corporation of Delaware
No Drawing. Filed Apr. 12, 1967, Ser. No. 630,194
9 Claims. (Cl. 260—559)

Impure α-6-deoxy-5-oxytetracycline sulfosalicyclic salt is converted to purified hydrochloride salt by recrystalization from methanolic hydrochloric acid followed by conversion of the recrystallized sulfosalicylate to the hydrochloride in ethanolic hydrogen chloride at controlled levels of hydrogen chloride and water.

3,397,232
METHOD OF INHIBITING POLYMERIZATION OF ACRYLAMIDE
Kazumi Takagi and Tamio Tsunokawa, Niihama-shi, Japan, assignors to Sumitomo Chemical Company, Ltd., Osaka, Japan, a corporation of Japan
No Drawing. Filed Mar. 21, 1966, Ser. No. 535,707
Claims priority, application Japan, Mar. 25, 1965, 40/17,612; May 31, 1965, 40/32,344; June 2, 1965, 40/32,580, 40/32,581
10 Claims. (Cl. 260—561)

Unwanted polymerization of acrylamide is inhibited by adding at least one inhibitor comprising nitrosobenzene, nitrosometacresol, and sodium-1-naphthylamine-4-sulfonate.

3,397,233
3-AMINOTRICYCLO[4.3.1.1^{3,8}]UNDECANES
Theodore L. Cairns, Greenville, Del., assignor to E. I. du Pont de Nemours and Company, Wilmington, Del., a corporation of Delaware
No Drawing. Continuation-in-part of application Ser. No. 277,134, May 1, 1963. This application June 15, 1964, Ser. No. 375,338
8 Claims. (Cl. 260—563)

3-aminotricyclo[4.3.1.1^{3,8}]undecanes have the formula

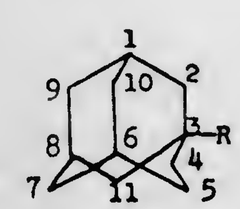

where R is an amine radical which may be substituted by a carboxyl or a carboxylate. The compounds have the ability to inhibit and deter the incidence and growth of harmful viruses.

3,397,234
PROCESS FOR THE PREPARATION OF α-PHENYL-N-METHYL NITRONE
Earl W. Cummins, Wilmington, Del., assignor to E. I. du Pont de Nemours and Company, Wilmington, Del., a corporation of Delaware
No Drawing. Continuation-in-part of application Ser. No. 375,946, June 17, 1964. This application Mar. 2, 1967, Ser. No. 619,965
11 Claims. (Cl. 260—566)

α-Phenyl-N-methyl nitrone is prepared by mixing an aqueous solution of N-methylhydroxylamine sulfate, bisulfate or chloride with benzaldehyde and then adding sodium or potassium hydroxide in amounts sufficient to maintain the pH of the aqueous phase between 1 and 6 and to attain a final stable pH between 4 and 6. Salting-out of the nitrone can be achieved by utilizing reactants at concentrations which will result in the final aqueous phase being approximately saturated with the by-product inorganic salt.

3,397,235
PHENYLHYDRAZINO-PROPANETHIOLS
Leonard Levine, Lake Jackson, Tex., assignor to The Dow Chemical Company, Midland, Mich., a corporation of Delaware
No Drawing. Filed Aug. 29, 1966, Ser. No. 575,536
1 Claim. (Cl. 260—569)

1. 1-(2-phenylhydrazino)-2-propanethiol.

3,397,236
N - 2,3 - BUTADIENYL - N - METHYLBENZYL-AMINE OR THE 2 - CHLORO - DERIVATIVE THEREOF
Edward John Watson, Jr., Norwich, N.Y., assignor to The Norwich Pharmacal Company, a corporation of New York
No Drawing. Filed Dec. 29, 1965, Ser. No. 517,426
3 Claims. (Cl. 260—570.9)

Monoamine oxidase enzyme inhibiting chemical compounds of the formula:

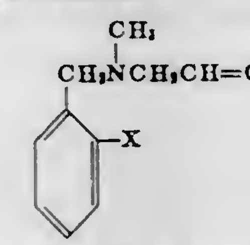

.HCl

wherein X is hydrogen or chloro.

3,397,237
PROCESS FOR PREPARING METHYL-DIALKYL-AMINES
John E. Jackson, Geneseo, N.Y., assignor, by mesne assignments, to Ashland Oil and Refining Company, a corporation of Kentucky
No Drawing. Filed June 10, 1965, Ser. No. 463,022
2 Claims. (Cl. 260—583)

Methyl dialkyl tertiary amines are produced by reacting a dialkyl secondary amine, such as dihydrogenated tallow amine, with methanol at elevated temperatures, e.g., 350°–450° F., and elevated pressures, e.g., from autogenous pressure up to 100 p.s.i.g., in the presence of a salt of chromous acid, e.g., copper chromite, and an alkaline earth oxide, e.g., calcium oxide.

3,397,238
PROCESS FOR THE PREPARATION OF ALKYL ETHERS OF AMINO-ALCOHOLS
Donald C. Hobbs, Niantic, Conn., assignor to Chas. Pfizer & Co., Inc., New York, N.Y., a corporation of Delaware
No Drawing. Filed Nov. 16, 1965, Ser. No. 508,147
4 Claims. (Cl. 260—584)

1. A process for preparing a compound of the formula:

$$R_1—O—R_2—NH_2$$

wherein R_1 is alkyl having from 1 to 4 carbon atoms and R_2 is alkylene having from 2 to 10 carbon atoms, which comprises reacting an hydroxy-substituted alkylamine of the formula:

$$HO—R_2—NH_2$$

wherein R_2 is as aforesaid, with a dialkyl sulfate selected from the group consisting of dimethyl sulfate, diethyl sulfate, di-n-propyl sulfate, and di-n-butyl sulfate in an aqueous medium at a pH of less than 1 and in the presence of from about 5 to about 75% by weight of a lower alkanoic acid based on the total reaction mixture weight.

3,397,239
PROCESS FOR PURIFYING 2 - (1 - CYCLOHEXENYL)CYCLOHEXANONE BY FRACTIONAL CRYSTALLIZATION
Kenneth K. Kelly, Penn Hills Township, Allegheny County, and Joseph S. Matthews, O'Hara Township, Allegheny County, Pa., assignors to Gulf Research & Development Company, Pittsburgh, Pa., a corporation of Delaware
No Drawing. Filed May 22, 1967, Ser. No. 640,332
6 Claims. (Cl. 260—586)

A process for separating 2 - (1 - cyclohexenyl)cyclohexanone from a mixture of 2-(1-cyclohexenyl)cyclohexanone and 2-cyclohexylidenecyclo-hexanone by fractional crystallization from a hydrocarbon solvent.

3,397,240
PROCESS FOR THE MONOHALOGENATION OF ACETONE
Arnold Kaufman, Scotch Plains, Stanley H. Nusim, Teaneck, and William A. Sklarz, Clark, N.J., assignors to Merck & Co., Inc., Rahway, N.J., a corporation of New Jersey
Continuation-in-part of application Ser. No. 212,129, July 24, 1962. This application Apr. 7, 1966, Ser. No. 540,919
5 Claims. (Cl. 260—593)

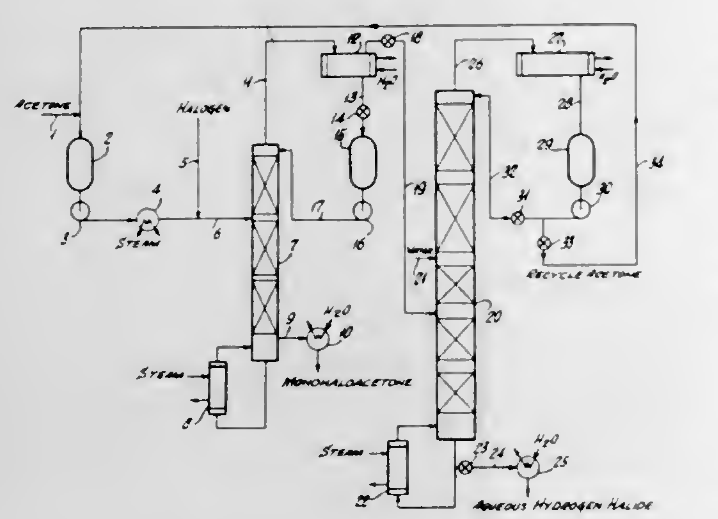

An improved continuous process for preparing monohaloacetone by contacting acetone with a halogen gas in the vapor phase, the acetone halogen ratio being at least 3:1. The monohaloacetone formed is separated from the unreacted acetone and hydrogen halide gas by fractional distillation. The excess acetone and hydrogen halide mixture is then extractively distilled with water to separate this mixture into its constituents, hydrogen halide acid and acetone, the latter may be recycled.

3,397,241
PROCESS FOR THE ECONOMICAL PREPARATION OF BR_3 ORGANOBORON COMPOUNDS
Franco Smai and Antonio Salvemini, Milan, Italy, assignors to Montecatini Edison S.p.A., Milan, Italy
No Drawing. Filed Dec. 29, 1964, Ser. No. 422,027
Claims priority, application Italy, Jan. 2, 1964, 6/64, 7/64
14 Claims. (Cl. 260—606.5)

A process for producing triorganoboron compounds having direct bonds between boron and the carbon atoms of the organic groups, comprising the steps of reacting a Grignard reagent having the general formula RMgX, where R is a hydrocarbon radical selected from the group consisting of alkyl, aryl, cycloalkyl and aralkyl radicals, and X is a halogen selected from the group consisting of chlorine, bromine and iodine, with boron oxide in the presence of a boron-containing activator selected from the group which consists of boron trifluoride, boron trifluoride addition compounds and organic esters of boric acid and in an organic solvent selected from the group which consists of hydrocarbons and ethers nonreactive with the Grignard reagent.

3,397,242
SULFONE PRODUCTION
Harvey S. Klein, Berkeley, Calif., assignor to Shell Oil Company, New York, N.Y., a corporation of Delaware
No Drawing. Filed Oct. 15, 1965, Ser. No. 496,668
5 Claims. (Cl. 260—607)

Ethyl 2-butenyl sulfone is produced as the major product when ethylene is contacted with sulfur dioxide in the presence of palladium halide as catalyst in an organic reaction solvent.

3,397,243
PROCESS FOR THE PRODUCTION OF MERCAPTANS AND SULFIDES FROM ALPHA OLEFINS
George F. Kite, Springdale, Pa., assignor to Gulf Research & Development Company, Pittsburgh, Pa., a corporation of Delaware
No Drawing. Filed Aug. 9, 1965, Ser. No. 478,464
17 Claims. (Cl. 260—609)

A process for the preparation of mercaptans and sulfides by reacting a compound such as an alpha olefin under substantially anhydrous conditions with liquid hydrogen sulfide in the presence of both an acyclic azo initiator and a finely divided elemental metal from the Iron Group metals of the Fourth Period of Group VIII of the Periodic Table. The ratio of mercaptans to sulfides in the product can be increased by the addition to the above reaction mixture of a mono or bis-thiolester.

3,397,244
PROCESS FOR PRODUCTION OF DIARYL AND DI(ALKARYL) SULFIDES
Rector P. Louthan, Bartlesville, Okla., assignor to Phillips Petroleum Company, a corporation of Delaware
No Drawing. Filed Sept. 9, 1964, Ser. No. 395,292
12 Claims. (Cl. 260—609)

1. A process for the preparation of at least one of a diaryl sulfide, a di(alkaryl) sulfide and an aryl alkaryl sulfide by reacting at an elevated temperature at least one of an aryl halide and an alkaryl halide with an alkali metal bisulfide in a polar organic compound reaction medium which is a substantial solvent for the reactants and which is essentially stable at the reaction conditions and then recovering a sulfide thus formed from the reaction mass thus obtained, said reaction medium being selected from

N-methyl-2-pyrrolidone
pyrrolidone
caprolactam
N-ethylcaprolactam
sulfolane
dimethylacetamide
tetramethylurea
hexamethylphosphoramide
N,N'-ethylenedipyrrolidone

the ratio of said halide to said bisulfide being in the approximate range 0.5:1–5:1.

3,397,245
METHOD OF MAKING DIACYL PEROXIDES
Herbert R. Appell, Pitcairn, Pa., assignor to Koppers Company, Inc., a corporation of Delaware
No Drawing. Continuation-in-part of application Ser. No. 251,023, Jan. 14, 1963. This application June 17, 1966, Ser. No. 558,231
11 Claims. (Cl. 260—610)

1. A method of making diacyl peroxides comprising reacting at a temperature of 0–75° C.

(a) an organic acid anhydride of the formula $(RCO)_2O$ wherein R is a member selected from the group consisting of lower alkyl, phenyl, lower alkyl phenyl, halophenyl, nitrophenyl and naphthyl and
(b) an aldehyde of the formula

$$R'\overset{O}{\overset{\|}{C}}H$$

wherein R' is a member selected from the group consisting of lower alkyl, phenyl, lower alkyl phenyl, halophenyl, and naphthyl with
(c) oxygen in the presence of a catalyst comprising a metal salt of a carboxylic acid, said metal being selected from the group consisting of lithium and magnesium, said salt being soluble in the reaction mixture.

3,397,246
STABILIZED CHLORINATED HYDROCARBONS
André Gustave Ryckaert, Uccle-Brussels, Belgium, and Charles Domen, deceased, late of Etterbeek-Brussels, Belgium, by Lucie Domen née Depauw, heir, Etterbeek-Brussels, Belgium, assignors to Solvay & Cie, Brussels, Belgium, a Belgian company
No Drawing. Continuation-in-part of application Ser. No. 323,215, Nov. 13, 1963. This application Apr. 26, 1966, Ser. No. 545,307
6 Claims. (Cl. 260—652.5)

Chlorinated hydrocarbons are stabilized by the addition of two synergistic substances, one being pyrrole, N-methylpyrrole, N-ethylpyrrole or (2-pyrryl)-trimethylsilane and the other being glycidol, glycidyl acetate, epoxycyclopentanol, 2 - methyl - 1,2-epoxypropanol-(3), 3-methoxy-1,2-epoxypropane or 3-ethoxy-1,2-epoxypropane.

3,397,247
PRODUCTION OF UNSATURATED MONOFLUORIDES
John W. Begley, Berkeley, Calif., and Robert M. Marsheck, Bartlesville, Okla., assignors to Phillips Petroleum Company, a corporation of Delaware
Filed Dec. 30, 1964, Ser. No. 422,260
7 Claims. (Cl. 260—653.4)

In a process for catalytically hydrofluorinating an acetylenic hydrocarbon, e.g., acetylene, with hydrogen fluoride, the reaction zone effluent is fractionated in a novel fractionation step to remove a mixture of hydrogen

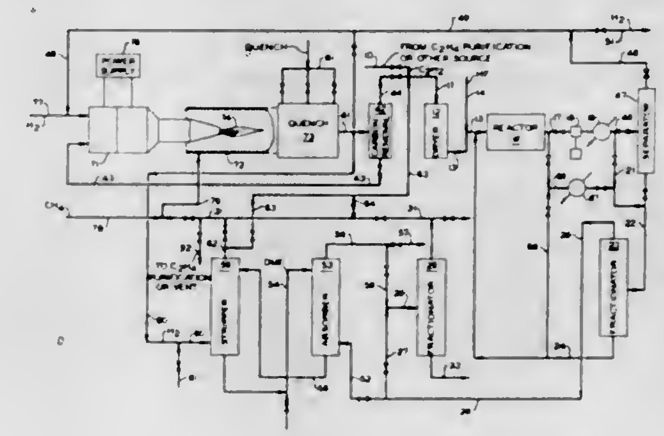

fluoride and gem-difluoroalkane, and said mixture is recycled to said reaction zone to provide novel combinations of steps for carrying out said process.

3,397,248
PROCESS FOR THE PREPARATION OF HEXAFLUOROPROPENE
Donald George Hummel, Wilmington, Del., and Frederick Wurl Swamer, Boothwyn, Pa., assignors to E. I. du Pont de Nemours and Company, Wilmington, Del., a corporation of Delaware
No Drawing. Filed May 15, 1964, Ser. No. 367,894
2 Claims. (Cl. 260—653.5)

Production of hexafluoropropene by the pyrolysis of 2-chloro-1,1,1,3,3,3-hexafluoropropane.

3,397,249
PROCESS FOR THE CATALYTIC HYDROGENATION OF AROMATIC HYDROCARBONS
Pieter C. Aben and Herman W. Kouwenhoven, Amsterdam, Netherlands, assignors to Shell Oil Company, New York, N.Y., a corporation of Delaware
Filed May 9, 1966, Ser. No. 548,677
Claims priority, application Netherlands, May 19, 1965, 6506348
8 Claims. (Cl. 260—667)

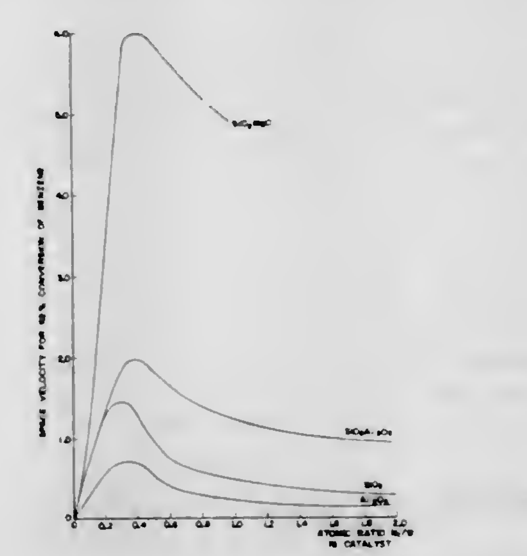

1. A process for the hydrogenation of aromatic hydrocarbons which comprises contacting said hydrocarbons at an elevated temperature and hydrogen pressure with a catalyst comprising sulfided tungsten and nickel on silica-magnesia, the atomic ratio of tungsten to nickel being from 4:1 to 1:1.

3,397,250
PROCESS OF PURIFYING AND RECOVERING ISOOLEFINS
Masao Nambu, Kawasaki-shi, Japan, assignor to Nippon Oil Company, Limited, Minato-ku, Tokyo, Japan
No Drawing. Filed Apr. 26, 1965, Ser. No. 451,055
Claims priority, application Japan, May 9, 1964, 39/26,053
7 Claims. (Cl. 260—677)

A process for recovering highly pure isoolefins from a hydrocarbon mixture of olefins by catalytically reacting the mixture to an aqueous solution containing a metal halide wherein the metal is a member selected from the group consisting of Group III metals, Group IV metals, Group V metals, Group VI metals and Group VIII metals.

3,397,251
METHOD OF PRODUCING ETHYLENE AND ACETYLENE
Carl Glinka, Stollwerckstr. 2, Krefeld-Urdingen, Germany
Filed Jan. 25, 1965, Ser. No. 427,598
Claims priority, application Germany, Sept. 30, 1964, G 41,659
7 Claims. (Cl. 260—679)

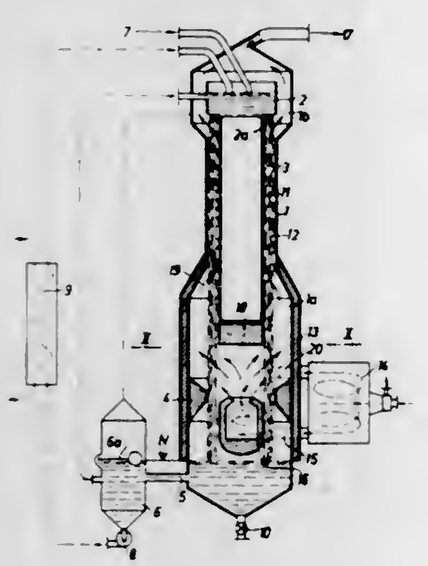

The methods disclosed relate to producing ethylene and acetylene from high boiling point liquid hydrocarbons, i.e. hydrocarbons having a boiling point between 200 and 400°. This method consists mainly in conducting the hydrocarbons in the form of a plurality of substantially parallel streaming filaments of liquid through a stream of inert gas at a temperature above the boiling range of the hydrocarbons, re-exposing the gaseous hydrocarbons thereby formed to a second stream of inert gas at a temperature high enough to cause ethylene or acetylene to be formed, and then withdrawing the resultant gaseous product through the intervening spaces between the streaming filaments of liquid hydrocarbons in countercurrent thereto.

3,397,252
PROCESS FOR PRODUCING DIETHYLENICALLY UNSATURATED COMPOUNDS
Frank N. Jones, Wilmington, Del., assignor to E. I. du Pont de Nemours and Company, Wilmington, Del., a corporation of Delaware
No Drawing. Filed July 25, 1966, Ser. No. 567,389
10 Claims. (Cl. 260—680)

1. Process for producing a diethylenically unsaturated compound comprising reacting a stannous salt in the presence of a salt of a metal of the platinum or palladium group of metals of the Periodic Table with a halogen-containing compound of the formula

$$RCH=\underset{R^1}{\underset{|}{C}}-(CH_2)_n-X$$

wherein R is selected from hydrogen, cyano, cyanoalkyl, cycloalkyl and aryl, R^1 is selected from R and halogen, X is halogen and n is a cardinal number selected from 0 to 1; with the proviso that R^1 is not halogen when n is 0; said process conducted at a temperature of 0 to 200° C. in a solvent or mixture of solvents capable of dissolving, at least in part, the salts and halogen-containing compound; and thereafter isolating the product.

3,397,253
POLYHYDANTOIN POLYMER PREPARED BY THE REACTION OF GLYCINE DERIVATIVES AND POLYISOCYANATES
Rudolf Merten and Willi Dünwald, Leverkusen, Karl-Heinz Mielke, Cologne-Stammheim, and Eckart Reese, Dormagen, Germany, assignors to Farbenfabriken Bayer Aktiengesellschaft, Leverkusen, Germany, a corporation of Germany
No Drawing. Filed Mar. 4, 1966, Ser. No. 531,798
Claims priority, application Germany, Mar. 23, 1965, F 45,600, F 45,602
17 Claims. (Cl. 260—830)

Polyhydantoin polymers may be prepared by heating glycine derivatives and polyisocyanates or polythiosocyanates to temperatures between 80° and 500° C. In an example 370 pts. of N,N'-bis-carbethoxymethyl-4,4' diamino diphenyl methane is condensed with 25 pts. of 4,4' diisocyanate-diphenylmethane in 1000 pts. of cresol at 210° C. for 10 hrs.

3,397,254
CARBOXY TERMINATED POLYESTERS PREPARED FROM TRIBASIC ACID ANHYDRIDES AND HYDROXY TERMINATED POLYESTERS
John Wynstra, Bridgewater Township, and John J. Gardikes, Somerville, N.J., assignors to Union Carbide Corporation, a corporation of New York
No Drawing. Filed Sept. 21, 1964, Ser. No. 398,038
9 Claims. (Cl. 260—835)

Carboxy terminated polyesters may be prepared from the reaction of a tricarboxylic acid anhydride with an hydroxy terminated polyester which in turn is the reaction product of a cyclic dicarboxylic acid or anhydride and a polyol. These polyesters may be combined with polyepoxides to form thermosetting compositions.

3,397,255
ALKYD RESINS PREPARED BY SIMULTANEOUSLY REACTING (1) A POLYCARBOXYLIC ACID (2) A POLYHYDRIC ALCOHOL HAVING AT LEAST 3 HYDROXYL GROUPS AND (3) A MONOEPOXYALKANE HAVING 8–26 CARBON ATOMS
Carlton E. Coats and Richard B. Graver, Savage, and Stephen F. Hudak, Minneapolis, Minn., assignors, by mesne assignments, to Ashland Oil and Refining Company, a corporation of Kentucky
No Drawing. Filed Dec. 29, 1964, Ser. No. 421,991
9 Claims. (Cl. 260—850)

Alkyd resins are obtained by the reaction of 15–60% by weight of the total resin components of a polycarboxylic acid, 10–45% by weight of the total resin components of a polyhydric alcohol, and 10–70% by weight of the total resin components of an epoxide containing component consisting essentially of an epoxy-alkane containing 8–26 carbon atoms.

3,397,256
COMBUSTION PROCESS AND APPARATUS TO INCREASE A FLAME TEMPERATURE
Robert A. Paul, York, Pa., and Thomas Lambert Shepherd, Essex Falls, N.J., assignors to The J. E. Baker Company, York, Pa., and Air Reduction Company, Incorporated, New York, N.Y., both corporations of New York
Filed July 1, 1966, Ser. No. 562,198
19 Claims. (Cl. 263—52)

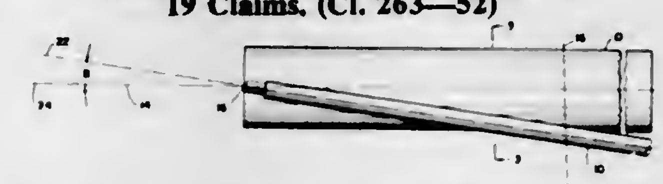

A method for combustion heating in which a fuel-oxygen flame is impinged on a fuel-air flame, which supplies the major portion of the heating, thereby increasing the temperature of the fuel-air flame at the area of impingement relative to the remainder of the fuel-air flame. An apparatus to carry out said method comprising a first burner, adapted to burn said fuel and air and to supply the major heat requirement, and a second burner whose flame is positioned to impinge on the first burner flame at an acute angle to the axis of the first burner flame.

3,397,257
METHOD OF FORMING SPHEROIDS OF PARTICULATE, AGGLOMERATION-RESISTANT REFRACTORY METAL OXIDES
Giovanni Brambilla, Lecco, and Dino Neri, San Donato Milanese, Italy, assignors to SNAM Progetti S.p.A., Milan, Italy, a company of Italy
No Drawing. Continuation-in-part of application Ser. No. 418,899, Dec. 16, 1964. This application Sept. 6, 1966, Ser. No. 577,190
Claims priority, application Italy, Jan. 21, 1964, 1,423/64; Jan. 18, 1966, 13,520/66
10 Claims. (Cl. 264—.5)

Generally spherical aggregates of agglomeration-resistant particles of metal oxides are prepared by mixing water-soluble resin whose viscosity increases in the presence of alkali into an aqueous solution of salt of the metal that is precipitated by basic medium and then feeding droplets of that solution into an aqueous alkaline solution.

3,397,258
PROCESS FOR EXTRUDING SPHERICAL EXPANDABLE PARTICLES
Olin E. Williams, Pittsburgh, Pa., assignor to Sinclair-Koppers Company, a partnership
Filed Dec. 15, 1965, Ser. No. 513,990
2 Claims. (Cl. 264—9)

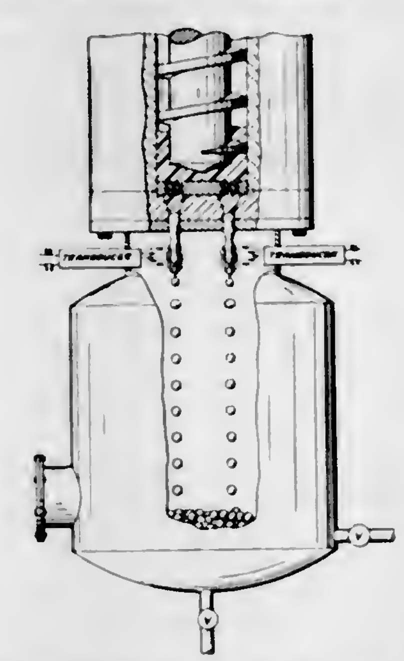

A process for forming spherical particles of expandable polystyrene polymer comprising extruding a fluid mixture of styrene polymer containing an expanding agent into a cooling liquid as a stream and subjecting the stream to a low-frequency vibration to break the stream into droplets. The droplets, while they are still in a fluid state, form spherical globules as they flow through the cooling liquid which eventually hardens these spherical globules.

3,397,259
METHOD FOR CASTING ARTICLES
Alanson J. Arnold, New Orleans, La., Burton Van Dyke, Westport, Conn., Don Van Dyke, Louisville, Ky., and David D. Porter, Metuchen, N.J., assignors to American Standard Inc., a corporation of Delaware
Filed Apr. 22, 1964, Ser. No. 361,847
13 Claims. (Cl. 264—86)

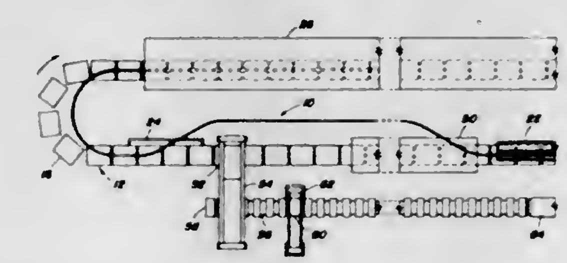

1. In a method of casting a fixture comprising, the steps of providing upper and lower conveying means which are separate from each other and adapted for carrying porous upper and lower molds, respectively, conveying the upper and lower molds through a plurality of stations along separate closed loop paths, mating an upper and lower mold at one station, pouring casting material at another station into said molds, and separating said mated molds at another station, the positions of said pouring and separating stations being adjustable relative to one another along said closed loop paths to thereby provide a method to control the casting rate and solidification of the casting material in successive mated molds when the latter are conveyed at a generally overall constant rate of advancement between the pouring and separation stations.

3,397,260
METHOD FOR ENCASING RIGID MEMBERS WITH CONCRETE
Bruce A. Lamberton, Berea, Ohio, assignor to Construction Techniques, Inc., Cleveland, Ohio, a corporation of Delaware
Continuation-in-part of application Ser. No. 446,346, Apr. 7, 1965, and a continuation of application Ser. No. 486,786, Sept. 13, 1965. This application June 26, 1967, Ser. No. 657,455
10 Claims. (Cl. 264—86)

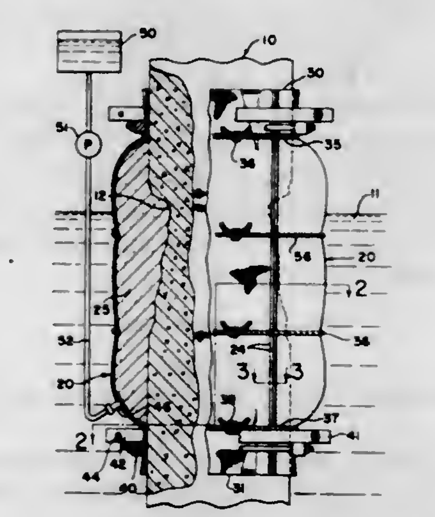

A form comprised of a sleeve of flexible porous material is positioned around an elongated rigid member with the ends of the sleeve pressed against the members

to form a space between the form and the material. A cementitious slurry of a known liquid-cement ratio is pumped into the space until a pressure is built up and the form is inflated. The pumping is continued until some of the liquid in the slurry passes outwardly through the pores of the fabric and the liquid-cement ratio is lowered.

3,397,261
PROCESS AND DEVICES FOR CHEVRONING PLIABLE SHEET MATERIAL
Lucien Victor Gewiss, Ville-d'Avray, France, assignor to Marc Wood Societe Anonyme pour la Promotion des Echanges Techniques Internationaux, Paris, France, a company of France
Filed Oct. 11, 1963, Ser. No. 315,618
20 Claims. (Cl. 264—89)

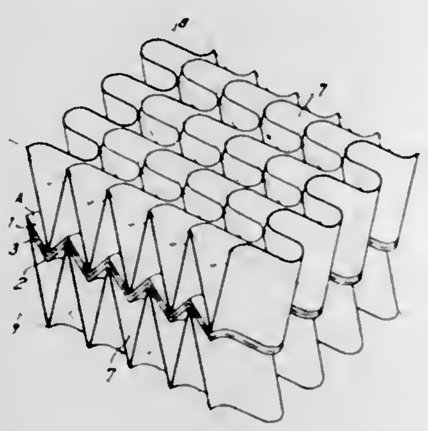

Method and apparatus for chevroning pliable material into an undulating three dimensional pattern. Apparatus for practicing the invention comprises a contractible chevroned structure. The pliable material is positioned against the contractible chevroned structure or sandwiched between contractible structures; and then the assembly is deformed. Force is applied to the assembly by vacuum or other force applying means which contracts the structure to form a three dimensional chevroned configuration.

3,397,262
METHOD FOR CONTINUOUS POLYMERIZATION AND COPOLYMERIZATION OF ACRYLONITRILE IN CONCENTRATED AQUEOUS INORGANIC SALT SOLUTIONS
Artur Stoy and Vladimír Stoy, both of 7 Farni, Prague 6, Czechoslovakia
Continuation of application Ser. No. 549,372, May 11, 1966, which is a continuation of application Ser. No. 89,700, Feb. 16, 1961. This application Aug. 22, 1967, Ser. No. 662,544
Claims priority, application Czechoslovakia, Feb. 16, 1960, 1,018/60
9 Claims. (Cl. 264—182)

Continuous process for polymerizing or copolymerizing acrylic monomers, especially acrylonitrile, in aqueous mixtures containing zinc, magnesium and calcium chlorides. Solubility of the polymer in the salt solution allows polymerization, deaeration, and spinning into fibers in a single continuous process.

3,397,263
PROCESS FOR PREPARING SMOOTH NYLON FILM
James C. Werner, Henderson, Ky., assignor, by mesne assignments, to Gulf Oil Corporation, Pittsburgh, Pa., a corporation of Pennsylvania
Filed Feb. 24, 1964, Ser. No. 346,746
5 Claims. (Cl. 264—216)

A method of preparing nylon film by extruding a molten web of nylon and cooling the web on a surface maintained at about ambient temperature to 200° F. The cooled self-supporting web is then separated from the

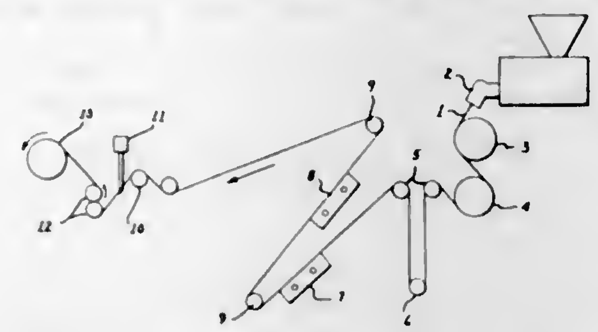

surface and treated with steam for a few seconds at about 212° F. to 230° F. and then wound onto a storage roll.

3,397,264
METHOD FOR CORRUGATING AND COMPRESSING FLEXIBLE TUBING
Thomas W. Martinek, Crystal Lake, Ill., assignor, by mesne assignments, to Union Oil Company of California, Los Angeles, Calif., a corporation of California
Original application July 24, 1964, Ser. No. 384,974, now Patent No. 3,343,220, dated Sept. 26, 1967. Divided and this application Apr. 21, 1967, Ser. No. 656,966
1 Claim. (Cl. 264—287)

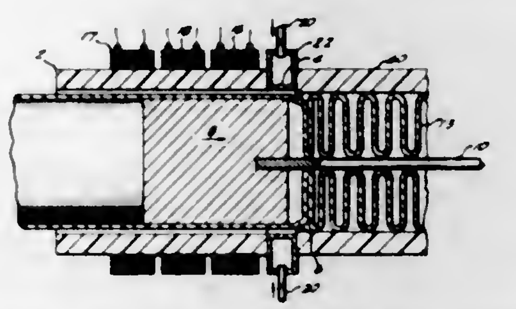

The method embodies corrugating and compressing flexible tubing. A ferromagnetic material is suspended within flexible tubing. As oscillating motion is imparted with magnetic force to the ferro-magnet which then moves between a first and second point. After the tubing is peripherally depressed the ferro-magnet creases, then corrugates the walls of the tubing and moves the corrugated segments into compression.

3,397,265
METHOD OF THE MANUFACTURE OF THIN-WALLED ARTICLES OF RUBBER OR THE LIKE
Harvey Neil Ansell, Olinda, Victoria, Australia, assignor to Rubber Products Development Proprietary Limited, Richmond, Victoria, Australia, a company of Australia
Continuation-in-part of application Ser. No. 392,858, Aug. 28, 1964. This application June 9, 1967, Ser. No. 657,448
1 Claim. (Cl. 264—306)

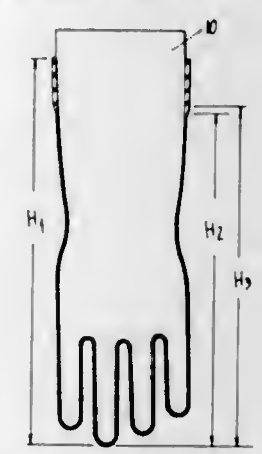

A method of continuously moulding rubber gloves by immersing a series of formers, each having the shape of

a glove, into a bath of concentrated coagulant to a depth of the length of the glove to be formed. Removing the formers from said bath and then immersing them in a solvent of the coagulant to remove substantially all the coagulant below the wrist portion of the glove to be formed. Transferring the formers to a bath of dilute coagulant and immersing them to about the same depth as the coagulant removing step. The formers are then removed from the bath and late is applied to their coagulant-coated areas to provide a glove having relatively thin-walled hand sections and a thick wrist band.

3,397,266
METHOD AND APPARATUS FOR THE INJECTION MOLDING OF ELONGATE CYLINDRICAL ARTICLES
Ralph E. Ayres, Midland, Mich., assignor to The Dow Chemical Company, Midland, Mich., a corporation of Delaware
Filed Oct. 31, 1966, Ser. No. 590,712
4 Claims. (Cl. 264—328)

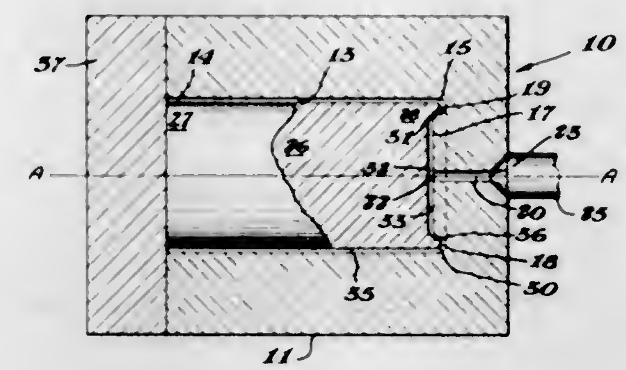

In the injection molding of cylindrical closed end articles such as tumblers, mandrel deflection during the molding operation is significantly reduced by injecting plastic on the axis of generation of the tumbler at the bottom and causing the mandrel and mold to define a restriction at the base of the cavity so that the material being injected exerts a radially outward pressure on the mandrel which overcomes to a significant degree tendency of the mandrel to deflect.

3,397,267
METHOD OF PRODUCING RABIES VACCINE
Mario V. Fernandes, Philadelphia, and Hilary Koprowski and Tadeusz J. Wiktor, Wynnewood, Pa., assignors to Research Corporation, New York, N.Y., a nonprofit corporation of New York
Filed Sept. 21, 1964, Ser. No. 397,763
8 Claims. (Cl. 424—89)

Anti-rabies vaccines are made by the subculture passage adaptation of live rabies virus strains for propagation in normal human diploid cells.

3,397,268
PROCESS OF TREATING HERPES SIMPLEX WITH 1-β-D-ARABINOFURANOSYLCYTOSINE
James H. Hunter, Kalamazoo, Mich., assignor to The Upjohn Company, Kalamazoo, Mich., a corporation of Delaware
No Drawing. Continuation-in-part of application Ser. No. 217,543, Aug. 17, 1962. This application Sept. 1, 1965, Ser. No. 484,473
4 Claims. (Cl. 424—180)

2. A process of treating herpes simplex in affected humans and animals which comprises the topical administration to said subjects of an effective amount of a member selected from the group consisting of 1-β-D-arabinofuranosylcytosine and a non-toxic acid addition salt thereof dispersed in a topical pharmaceutical carrier.

3,397,269
METHOD FOR CONTROLLING PESTS SELECTED FROM INSECTS AND MITES WITH PHOSPHOROMONO- OR DITHIOATES AND THIOCARBONATES
Edward N. Walsh, New City, N.Y., assignor to Stauffer Chemical Company, New York, N.Y., a corporation of Delaware
No Drawing. Continuation-in-part of application Ser. No. 341,103, Jan. 29, 1964. This application May 16, 1967, Ser. No. 638,760
10 Claims. (Cl. 424—205)

Pests are controlled through the application of a pesticidal amount of a compound having the formula:

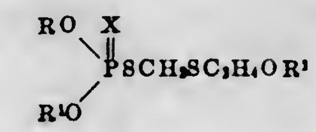

wherein R and R[1] are lower alkyl, X is a chalcogen such as oxygen or sulfur, and R[2] is selected from the group consisting of

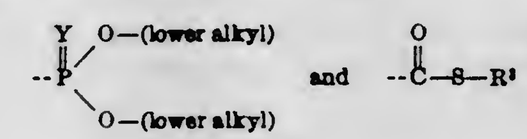

where Y is chalcogen such as oxygen or sulfur and R[3] is selected from the group consisting of lower alkyl and phenyl.

3,397,270
METHOD FOR CONTROLLING AND ERADICATING INSECTS WITH PHOSPHOROAMIDATE STERILANTS
Philip C. Hamm, Glendale, Mo., assignor to Monsanto Company, St. Louis, Mo., a corporation of Delaware
No Drawing. Filed Jan. 25, 1967, Ser. No. 611,546
11 Claims. (Cl. 424—220)

Compounds of the following formula are insect chemosterilants:

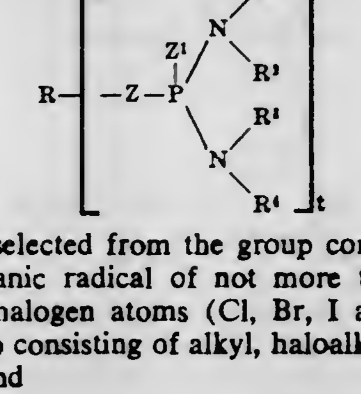

wherein R is selected from the group consisting of

(1) an organic radical of not more than 12 carbon atoms and 3 halogen atoms (Cl, Br, I and F) selected from the group consisting of alkyl, haloalkyl, alkenyl, and haloalkenyl, and

(2)

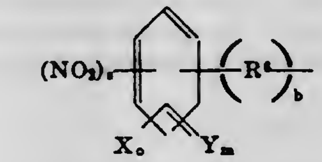

wherein X is halogen (Cl, Br, I and F), Y is selected from the group consisting of alkyl and haloalkyl of not more

than 18 carbon atoms and 3 halogen atoms (Cl, Br, I and F) and alkoxy of not more than 4 carbon atoms, R^6 is alkylene of not more than 4 carbon atoms, s is an integer from 0 to 2 inclusive, m is an integer from 0 to 3 inclusive, n is an integer from 0 to 5 inclusive and b is an integer from 0 to 1;

R^1, R^2, R^3 and R^4 are each selected from the group consisting of hydrogen, CH_3 and $CH_2R^5X^1_a$ wherein R^5 is hydrocarbyl of not more than 12 carbon atoms selected from the group consisting of alkyl, alkenyl and alkynyl, X^1 is halogen (Cl, Br, F and I) and a is an integer from 0 to 3 inclusive; Z and Z^1 are selected from the group consisting of oxygen and sulfur, and t is an integer from 1 to 2, provided that t is always 1 when R is selected from the group consisting of (1).

3,397,271

ACYL SUBSTITUTED 2,2'-BIPHENYLENE CHALKOGENIDES AS INSECTICIDES

John H. Cornell, Jr., Arlington, Mass., assignor to Monsanto Research Corporation, St. Louis, Mo., a corporation of Delaware

No Drawing. Original application Aug. 24, 1967, Ser. No. 482,240, now Patent No. 3,341,552, dated Sept. 12, 1967. Divided and this application July 14, 1967, Ser. No. 671,510

5 Claims. (Cl. 424—244)

This invention is concerned with the insecticidal use of compositions of new acyl substituted 2,2'-biphenylene chalkogenides.

3,397,272

CYCLOALKYL BENZYLAMINE AND ANOREXIGENIC COMPOSITIONS AND METHOD OF USE

Karl J. Doebel, Ossining, and Frederick Leonard, Yonkers, N.Y., assignors to Geigy Chemical Corporation, Greenburgh, N.Y., a corporation of Delaware

No Drawing. Original application Oct. 24, 1963, Ser. No. 318,761, now Patent No. 3,320,252, dated May 16, 1967. Divided and this application Sept. 16, 1966, Ser. No. 615,273

10 Claims. (Cl. 424—248)

1. A process for obtaining an anorexigenic effect in mammals which comprises administering internally a dosage unit form of a member selected from the group consisting of a compound of the formula

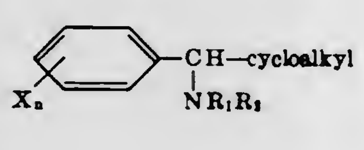

wherein

NR_1R_2 is selected from the group consisting of mono (lower)alkylamino, morpholino, N-methylpiperazino, piperidino, pyrrolidino and hexamethyleneimino;
X is chosen from the group consisting of hydrogen, chlorine, bromine, trifluoromethyl, lower alkyl and lower alkoxy;
n is an integer of 1 to 3;

cycloalkyl is selected from the group consisting of cyclopentyl and cyclohexyl or non-toxic water-soluble acid addition salts thereof, in an amount ranging from about 25 to 300 milligrams of said compound.

3,397,273

CONTROLLING PHYTOPATHOGENIC FUNGI ON PLANTS WITH 3-PYRIDYL METHANE DERIVATIVES

Earle M. Van Heyningen and Harold M. Taylor, Indianapolis, Ind., assignors to Eli Lilly and Company, Indianapolis, Ind., a corporation of Indiana

No Drawing. Filed Feb. 18, 1966, Ser. No. 528,374

7 Claims. (Cl. 424—263)

1. A method for protecting plants from attack by phytopathogenic fungi which comprises treating the plants with a fungicidally effective amount of a compound of the formula:

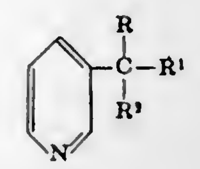

wherein

R is hydrogen, C_1–C_3 alkyl, cyano, carboxyl, carbo(C_1–C_3)-alkoxy, benzyl, or phenyl;
R^1 is benzyl, phenyl, pyridyl, pyridylmethyl, or thienyl;
R^2 is C_3–C_6 alkyl, C_3–C_8 cycloalkyl, benzyl, phenyl, pyridyl, or thienyl; or
a nonphytotoxic acid addition salt thereof.

3,397,274

METHOD FOR THE CONTROL OF FUNGI

James Wellington Clapp, Princeton, N.J., assignor to American Cyanamid Company, Stamford, Conn., a corporation of Maine

No Drawing. Original application Nov. 10, 1964, Ser. No. 410,269. Divided and this application Feb. 1, 1967, Ser. No. 613,088

6 Claims. (Cl. 424—316)

The present invention relates to a novel method for the control of fungi utilizing a guanidine represented by the formula:

$$R-O-R^1-NH-\overset{\overset{NH}{\|}}{C}-NH_2$$

and the acid addition salts thereof wherein R is an alkyl substituent containing from 8 to 18 carbon atoms and R^1 is an alkyl radical containing from 3 to 4 carbon atoms.

3,397,275

METHODS FOR CONTROLLING OR ERADICATING INSECTS WITH QUATERNARY AMINE STERILANTS

Philip C. Hamm, Glendale, Mo., assignor to Monsanto Company, St. Louis, Mo., a corporation of Delaware

No Drawing. Filed Jan. 25, 1967, Ser. No. 611,545

10 Claims. (Cl. 424—329)

Compounds of the following formula are insect chemosterilants:

$$\left[X_aR-\underset{R^3X^3_d}{\overset{R^1X^1_b}{\underset{|}{\overset{|}{N}}}}-R^2X^2_c\right]^+ Z^-$$

wherein R, R^1, R^2 and R^3 are selected from the group consisting of alkyl and alkenyl of not more than 18 carbon atoms, X, X^1, X^2, X^3 and Z are halogen (Cl, Br, F and I) and a, b, c and d are each integers of 0 to 3.

ELECTRICAL

3,397,276

ELECTRIC-ARC SMELTING FURNACE

Gustav-Adolf Sixel, Dusseldorf-Kaiserswerth, Germany, assignor to Beteiligungs- und Patentverwaltungsgesellschaft mit beschrankter Haftung, Essen, Germany, a corporation of Germany

Filed June 7, 1965, Ser. No. 461,664

Claims priority, application Germany, June 12, 1964, B 77,220

3 Claims. (Cl. 13—10)

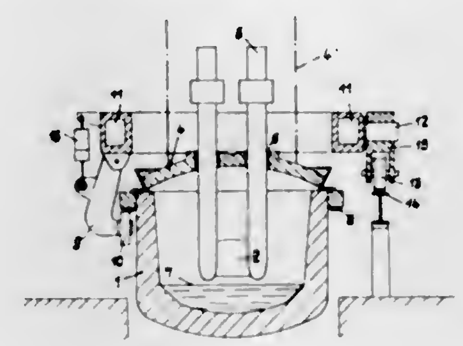

An electric-arc smelting furnace for smelting of steel, a furnace pot containing a liquid, means for performing at least one of tipping, rotating and displacing movements of the furnace pot, which means are disposed above the level of the liquid content and comprises a ring disposed at the outer periphery of the furnace pot above the level of the liquid content. Carrying rollers support the rotating ring and a carrying ring including tipping pivots is provided and the carrying rollers are suspended from the carrying ring.

3,397,277

DEVICE FOR INDICATING ABNORMAL OPERATING CONDITIONS IN ELECTRODE FURNACES

Erik Helsing and Nils-Erik Strom, Vasteras, Sweden, assignors to Allmanna Svenska Elektriska Aktiebolaget, Vasteras, Sweden, a corporation of Sweden

Continuation of application Ser. No. 486,972, Sept. 13, 1965. This application Nov. 1, 1966, Ser. No. 591,337

Claims priority, application Sweden, Mar. 2, 1962, 2,311/62

2 Claims. (Cl. 13—13)

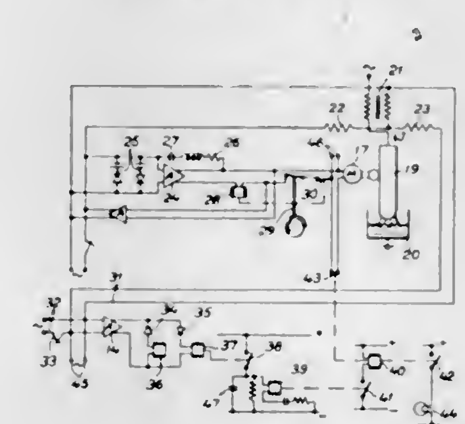

In an arc furnace having a motor for adjusting the position of an electrode, a variable magnitude of the furnace is measured and compared with a reference magnitude. An amplifier emits signals when there is a difference between the reference signal and the measured signal. Time delay means connect the amplifier with the control means for the motor. A continuous output signal is furnished from the amplifier when the measured value is either greater or less than the reference value, and the time delay means are started in response to either of such conditions, and act to stop the motor after a predetermined time if such signals continue.

3,397,278

ANODIC BONDING

Daniel I. Pomerantz, Lexington, Mass., assignor to P. R. Mallory & Co., Inc., Indianapolis, Ind., a corporation of Delaware

Continuation-in-part of application Ser. No. 453,600, May 6, 1965. This application Oct. 3, 1966, Ser. No. 583,907

23 Claims. (Cl. 174—52)

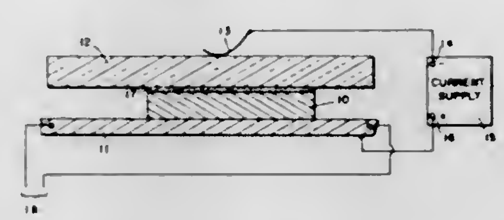

An inorganic insulator element of normally high electrical resistivity is bonded to a metallic element by placing the substantially smooth and complemental adjoining surfaces of the elements in contact, heating the insulator element to increase its electrical conductivity and applying a potential across the elements thereby producing an electric current through the elements and creating an electrostatic field whereby the elements are brought into intimate contact with each other and a bond is formed. The foregoing is useful, for example, to encapsulate a planar surface of a silicon semiconductor device with a glass.

3,397,279

CABLE CLAMP AND GUIDE MEANS FOR ELECTRICAL CONNECTORS

Clarence Leonard Paullus and Larry Ronald Stauffer, Camp Hill, Pa., assignors to AMP Incorporated, Harrisburg, Pa.

Filed Jan. 25, 1966, Ser. No. 522,884

2 Claims. (Cl. 174—135)

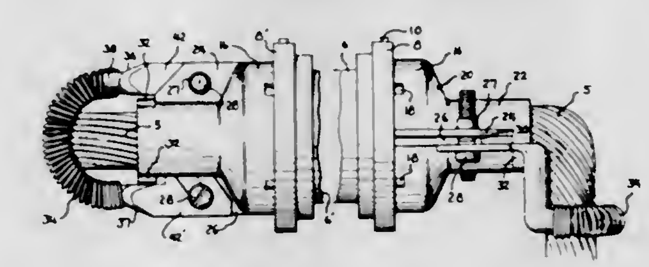

Cable guide intended for use with multi-contact electrical connector having cable extending therefrom comprising helical spring having laterally extending supports on its ends and means on the ends of the supports for securing the guide to the rearward side of a cable clamp or to the rearward side of the connector. When it is desired to guide a cable extending from the connector laterally with respect to the connector axis, the guide member is deformed until the helical spring assumes an arcuate configuration. The free ends of the support members are then secured to the rearward side of the cable clamp and cable is passed from the cable clamp laterally between the support members so that it bears against this surface of the deformed helical spring.

3,397,280
SELF-LOCKING GROMMET
Ferdinand Klumpp, Jr., Mountainside, N.J., assignor to Heyman Manufacturing Company, Kenilworth, N.J., a corporation of New Jersey
Filed Aug. 24, 1967, Ser. No. 662,922
3 Claims. (Cl. 174—153)

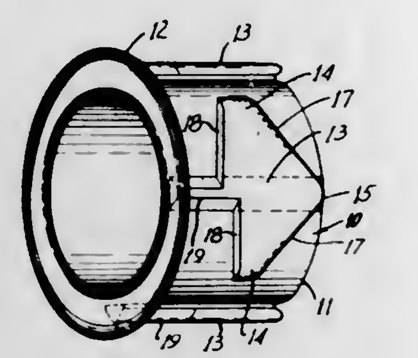

The present invention provides a self-locking grommet of relatively hard insulating material which will accommodate itself to panels of varying thicknesses. The grommet generally comprises a body member having a flange on one end adapted to engage one side of an apertured panel and, a plurality of oppositely disposed wing-like members integral with the outer surface of the body adapted to be flexed towards the body as it passes through the aperture. Each of the wing members has oppositely disposed flexible portions the end lengths of which opposite the flange portion lie in a plane parallel to the plane of the flange and equidistantly spaced therefrom with various of the end lengths of the flexible wing members positioned at different spaced distances from the flange. Ribs extend from the wing-like locking members to the base of the flange and include thereon a substantially raised surface area behind the flange to prevent rotatable and/or lateral movement of the grommet. The wing-like members are preferably provided in pairs and tapered towards a triangular shaped point allowing for ready insertion of the grommet within the panel aperture.

3,397,281
CHROMINANCE SIGNAL PROCESSING APPARATUS
Bernard D. Loughlin, Centerport, N.Y., assignor to Hazeltine Research, Inc., a corporation of Illinois
Filed Dec. 30, 1965, Ser. No. 517,601
9 Claims. (Cl. 178—5.4)

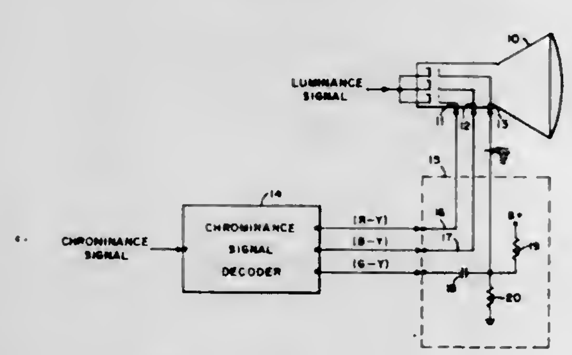

Disclosed is chrominance signal processing apparatus for use in a color television receiver having a color image reproducing device. The apparatus develops a set of three color-difference signals from a supplied chrominance signal with at least two of the color-difference signals including both a D-C component and A-C components representative of color-difference information. The apparatus then translates each of the developed color-difference signals to an input of the color image reproducing device with the D-C component of only a selected one of the color-difference signals intentionally suppressed. Other embodiments are also disclosed.

3,397,282
LIGHT SPOT FOCUSSING DEVICE USED FOR FACSIMILE TRANSMITTING EQUIPMENT
Akira Iijima, Yokohama, Japan, assignor to Denki Onkyo Co., Ltd., Tokyo, Japan
Filed May 14, 1965, Ser. No. 455,900
Claims priority, application Japan, Oct. 15, 1964, 39/80,609
4 Claims. (Cl. 178—6)

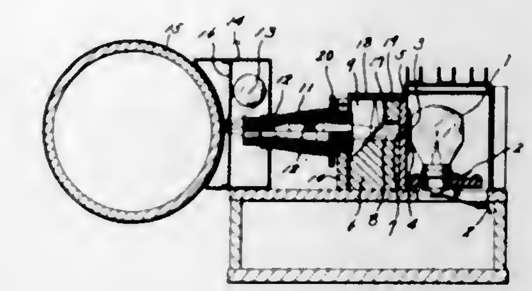

A light spot focussing device, particularly useful with facsimile transmitting equipment, is disclosed as including means for reflecting the light spot, focussed on copy on a facsimile cylinder, to a monitoring screen where the sharpness of focussing may be readily observed. By observing the reflected light spot on the monitoring screen, an operator can adjust the focus of the light spot directed on the copy on the facsimile cylinder.

3,397,283
SINGLE PICTURE SELECTOR SYSTEM
Arturo E. Stosberg, Palo Alto, and Donald A. Horstkorta, Menlo Park, Calif., assignors to MVR Corporation (formerly known as Machtronics, Inc.), Palo Alto, Calif., a corporation of California
Filed Dec. 11, 1964, Ser. No. 417,677
14 Claims. (Cl. 178—6.6)

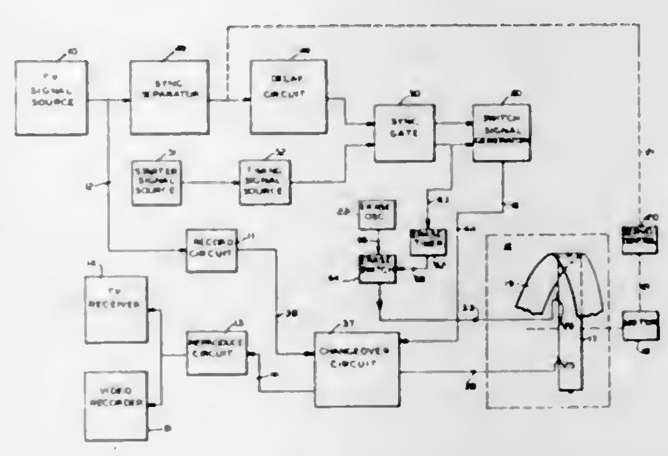

A system for selecting a single picture signal from a moving picture television signal to be repetitively reproduced and to be immediately substituted for the television signal. This system includes trigger means to enable a single picture signal to be selected from the television signal commencing during one of its blanking intervals after the equalizing pulses thereof, a storage device for repetitively reproducing the single picture signal, and a switch signal generator to produce a signal to enable the storage device to record and then repetitively reproduce the single picture signal which is to be substituted for the television signal, all of which are responsive to the sync pulses of the television signal so that the repetitively reproduced single picture signals are in synchronization with the television signal.

3,397,284
TELEVISION CAMERA SYNC GENERATOR WHICH DERIVES SYNC SIGNALS FROM THE HORIZONTAL AND VERTICAL SWEEP CIRCUITS
De Loss J. Tanner, Bensenville, Ill., assignor to Motorola, Inc., Franklin Park, Ill., a corporation of Illinois
Filed May 24, 1965, Ser. No. 457,938
7 Claims. (Cl. 178—69.5)

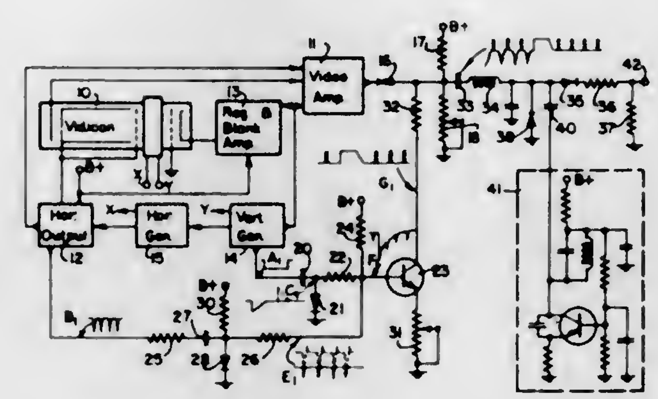

1. A synchronizing signal generating circuit for a television system having a horizontal sweep generator, a vertical sweep generator, and a black level clipper circuit for passing blanking signals below a preset DC level and giving a flat top to the output blanking signal, said system including in combination, a pulse amplifier having input circuit means and output circuit means, said output circuit means coupled to the black level clipper circuit, a first pulse processing circuit coupled to the horizontal sweep generator, a second pulse processing circuit for forming pulse signals of predetermined width coupled to the vertical sweep generator, said first pulse processing circuit and said second pulse processing circuit coupled to said input circuit, said first pulse processing circuit including differentiator means and clipping means for forming delayed spikes with predetermined base width, said delayed spikes and said pulse signals applied to said input circuit means for composition by adding, and supplied to said pulse amplifier for producing flat topped pulses which pulses being combined with the blanking signals produce blanking pulses with synchronizing pulses at the top having a predetermined front and back porch.

3,397,285
ELECTRONIC APPARATUS
Leslie P. Golonski, Hanover Park, Ill., assignor to Motorola, Inc., Franklin Park, Ill., a corporation of Illinois
Filed July 22, 1964, Ser. No. 384,414
7 Claims. (Cl. 179—1)

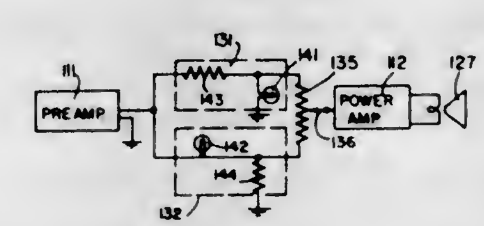

A variable compression and expansion circuit for an audio amplifier incorporates separate compression and expansion circuits having inputs coupled to the output of the amplifier. A resistor having a variable tap is coupled between the outputs of the compression and expansion circuits to control a negative feedback signal used for regulating the gain of the amplifier.

3,397,286
FOUR-SPEAKER ADJUSTABLE STEREO SOUND SYSTEM
Thomas A. Prewitt and Donald E. Brinkerhoff, Kokomo, Ind., assignors to General Motors Corporation, Detroit, Mich., a corporation of Delaware
Filed Sept. 17, 1964, Ser. No. 397,162
5 Claims. (Cl. 179—1)

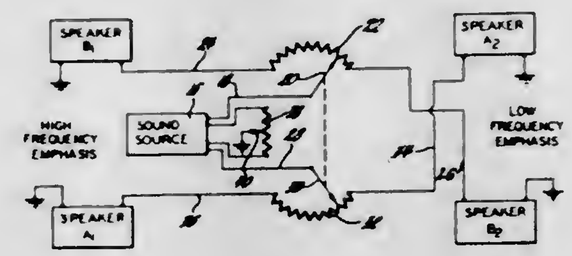

A stereophonic sound reproducing system for automobiles including speaker units mounted in a quadrilateral pattern. A source such as a radio receiver delivers R and L signals to diagonally opposite pairs of speaker units. Balance and front-rear fader controls permit spatial variation in sound center. A second embodiment makes use of three speakers, two mounted in the front of the automobile and one in the middle rear portion. Similar balance and fader controls are provided for the three speaker embodiment.

3,397,287
AUTOMATIC ANSWER-BACK SYSTEM
Ryuichi Ishii and Hideo Totani, Tokyo, Japan, assignors to Nippon Electric Company Ltd., Minatoku, Tokyo, Japan
Filed Aug. 18, 1964, Ser. No. 390,415
Claims priority, application Japan, Aug. 26, 1963, 38/45,608
7 Claims. (Cl. 179—2)

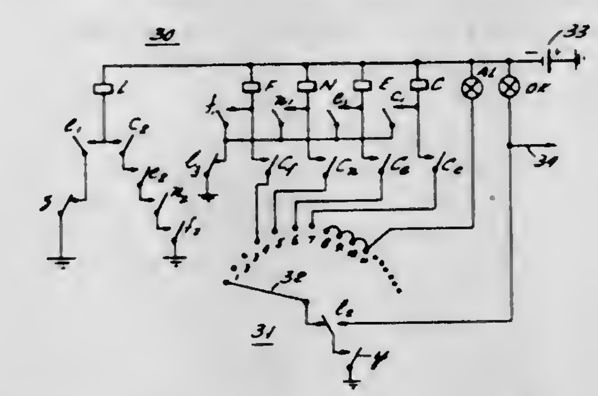

An automatic answer-back system for use in conventional telephone networks wherein the calling party may establish the right of the called party to receive digital-type data commonly used in data processing equipment by examination of an answer-back code transmitted by the called party to the calling party. Equipment is provided for storing the presence of predetermined characters in selective positions of the answer-back code immediately after the last selected position examined has been received. These are provided to determine whether the presence of all selected characters in their selected positions were appropriately transmitted so as to produce a signal enabling the transmission of digital-type data from the calling to the called party. Failure in the receipt of any predetermined character in its appropriate position prevents transmission of the digital data requiring either a retransmission of the answer-back code or the replacement of the call by the calling party to the desired called party.

3,397,288
TELEPHONE PATCHING CIRCUIT
Lawrence J. Semon, 710 Wilshire Blvd., Rm. 305, Santa Monica, Calif. 90411
Filed Oct. 4, 1965, Ser. No. 492,374
6 Claims. (Cl. 179—42)

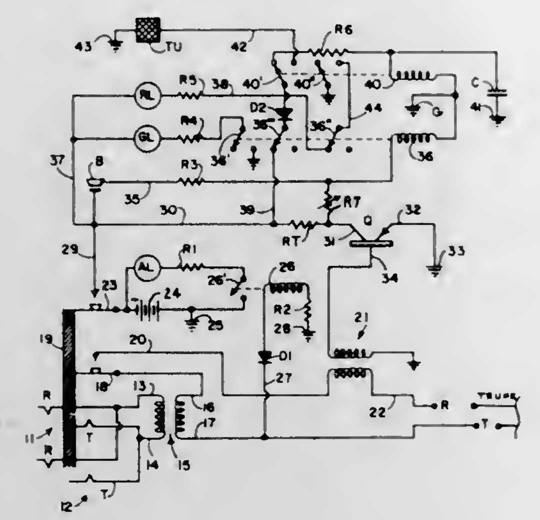

A patching circuit is provided to connect an incoming call with an outgoing call at a telephone answering switchboard and includes circuitry automatically responsive to a voltage spike generated in one of the connecting lines when one of the parties hangs up to energize a tone generator. The sound from this tone generator thus automatically advises the operator at the switchboard that the patched call has been completed and she can then immediately free the lines for other calls.

3,397,289
MAGNETIC TRANSDUCER HEAD MOUNT
Robert Fred Pfost, Mountain View, and Walter Earl Lock, San Jose, Calif., assignors to MVR Corporation, Palo Alto, Calif., a corporation of California
Filed Feb. 8, 1965, Ser. No. 431,083
5 Claims. (Cl. 179—100.2)

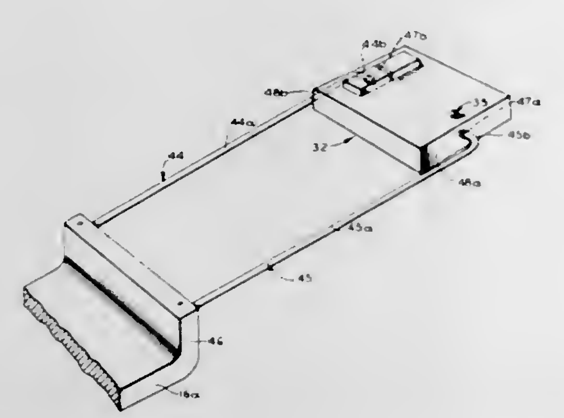

The magnetic transducer head device includes a transducer with an elongated plane surface and a pivot located between the lateral extensions of the ends of the transducer and on one side thereof. Spring means is applied to the device to provide an effective force centrally directed between the pivot and the ends of the transducer. When contacting a record medium, the transducer is not restrained from aligning itself with the surface of the record medium, and the transducer itself will be caused to turn about the pivotal fulcrum provided by the end of the pivot. Consequently, the transducer will be automatically oriented to follow the changing slopes of the record medium.

3,397,290
MECHANISM FOR POSITIONING ROLLERS AND TRANSDUCER MEANS RELATIVE TO A FILM STRIP
Henry A. Thomson and Victor J. Witkowski, Denver, Colo., and Philip N. Crawford, Rochester, N.Y., assignors to Eastman Kodak Company, Rochester, N.Y., a corporation of New Jersey
Filed Mar. 8, 1965, Ser. No. 437,887
17 Claims. (Cl. 179—100.2)

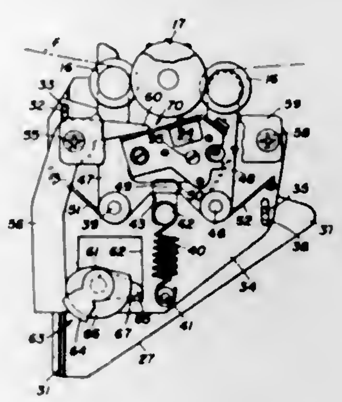

1. Photographic apparatus having a continuously rotatable member about which a film strip is adapted to to at least partially wrapped for driving engagement therewith, comprising in combination:

means mounted on said apparatus adjacent said rotatable member and maintained in a first position for guiding and holding said film strip in driving engagement with said rotatable member, and adapted to be moved into a second position in which said guiding and holding means is disengaged from said film strip so that the latter can be manually threaded around and removed from said rotatable member;

transducer means pivotally mounted on said guiding and holding means adjacent said rotatable member for engaging said film strip on said rotatable member in sound-transducing relationship with a sound track on said film strip, and adapted to be moved independently of said guiding and holding means into a disengaged position out of such sound-transducing relationship with said film strip; and

means on said apparatus coupled to said guiding and holding means and to said transducer means and movable from a sound operating position to a silent operating position for moving said transducer means independently of said guiding and holding means into said disengaged position and from said silent operating position to a threading position for moving said guiding and holding means into said second position while holding said transducer means disengaged from said film strip.

3,397,291
RETAINING RIB AND PIN FOR THIRD RAIL CONTACT SHOE
Bernard Maloney, Gary, Ind., assignor to Amsted Industries Incorporated, Chicago, Ill., a corporation of New Jersey
Filed Dec. 15, 1966, Ser. No. 602,007
7 Claims. (Cl. 191—49)

1. In an electrical contact shoe assembly for a vehicle, the combination of a fulcrum having means for attachment to the vehicle, a pad having a bottom surface for engagement with an associated source of electrical current, a tongue on said pad received within a slot of said fulcrum, spring means bearing against upwardly and downwardly facing surfaces of the tongue and fulcrum, respectively, at one side of the slot for urging said pad and fulcrum into interengagement at the opposite side

of the slot, a keyway on the pad above the slot, a key extending through the keyway and seated at its ends against upwardly facing surfaces of the fulcrum, said key having line contact with the pad in said keyway and

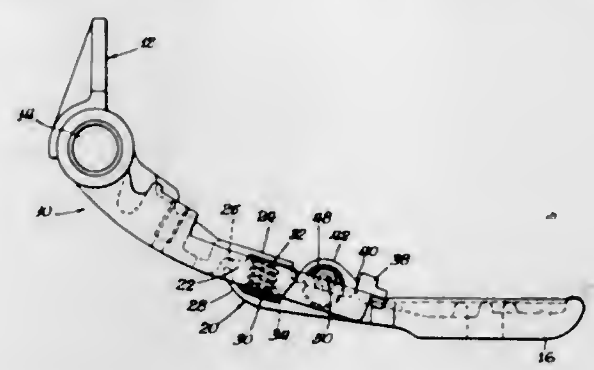

means on the fulcrum for positively locking the key against rotation about its longitudinal axis and about a substantially vertical axis perpendicular to the first-mentioned axis.

3,397,292
VISUAL PROGRAMMING APPARATUS
Jack Sutton, Fawley, Southampton, England, assignor to G. Stibbe & Company Limited, Leicester, England, a British company
Filed Sept. 21, 1966, Ser. No. 581,022
Claims priority, application Great Britain, Apr. 27, 1966, 18,329/66
19 Claims. (Cl. 200—6)

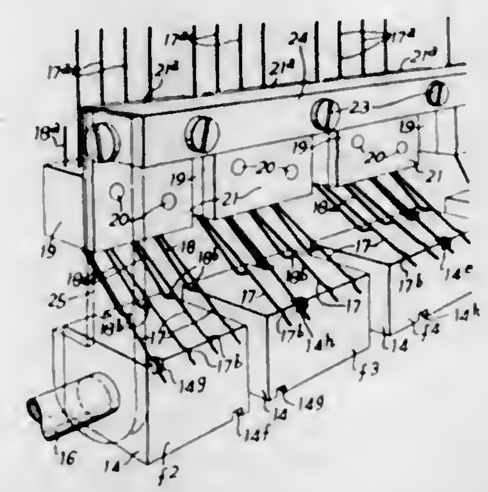

Programming apparatus for controlling a machine capable of sequentially performing a program of functions and comprising a plurality of individual elements for controlling switches adapted to influence the machine. Each element is rotatable about an axis to present one of a plurality of successive faces to a viewing reference plane. These faces are coded and distinguished from one another and from the faces of other elements, so that with the elements arranged in a grid-like assembly, they can be turned to present a visual pattern of faces representing a desired program.

3,397,293
METAL-CLAD SWITCHGEAR EMPLOYING VACUUM TYPE CIRCUIT INTERRUPTERS
Kenneth G. Darrow, Wallingford, and Charles H. Titus, Newtown Square, Pa., assignors to General Electric Company, a corporation of New York
Filed Aug. 13, 1965, Ser. No. 479,373
14 Claims. (Cl. 200—50)

1. In an electric switchgear unit for controlling a three-phase alternating current circuit that comprises three buses extending into said unit in spaced-apart relationship and three line conductors insulated from each other and adapted to be electrically connected, respectively, to said three buses, each of said phases extending through one of said buses and an associated one of said line conductors, said switchgear unit comprising:

(a) three vertically-spaced stationary disconnect contacts respectively connected to said three buses,

(b) three additional vertically-spaced stationary disconnect contacts adapted to be respectively connected to said line conductors,

(c) means for locating the pair of said disconnect contacts that is in each phase of said circuit in horizontally-spaced relationship to each other,

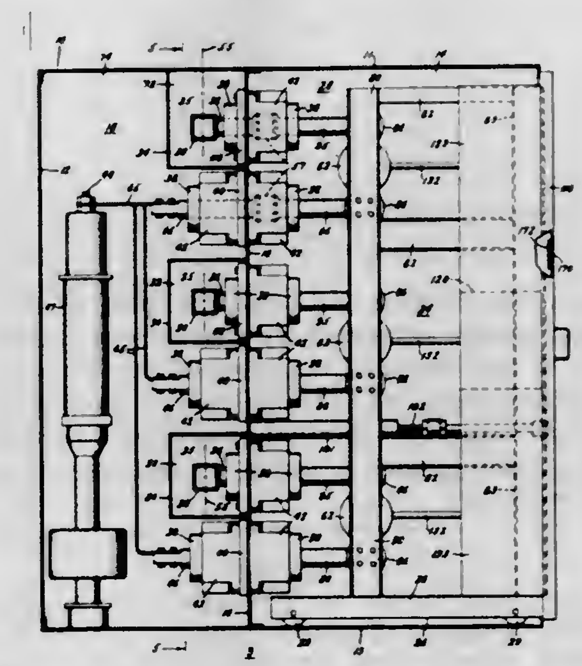

(d) a movable circuit breaker unit horizontally movable between a connected position and a disconnected position, and comprising:

(i) three vacuum interrupters respectively associated with the three phases of said circuit, each of said vacuum interrupters comprising a tubular housing at least partially of insulating material and conducting means forming a conductive path therethrough when the interrupter is closed,

(ii) means for mounting said vacuum interrupters in vertically-spaced relationship to each other with the longitudinal axes of said tubular housings extending generally horizontal,

(iii) a pair of horizontally-spaced studs at opposite ends of each of said tubular housings projecting from said housing transversely of said longitudinal axis and generally horizontally in the direction of movement of said movable circuit breaker unit,

(iv) means for electrically connecting said studs and said conducting means in the associated vacuum interrupter in series,

(v) and contacts at the free ends of said horizontally-spaced pair of studs for engaging a horizontally-spaced pair of said disconnect contacts when said movable circuit breaker unit is moved into its connected position.

3,397,294
APPARATUS FOR OPERATING PROGRESSIVE DIRECTION SIGNALING DEVICES
Walter T. Stol, Warren, Mich., assignor to Boyne Products, Inc., Boyne City, Mich., a corporation of Michigan
Filed May 6, 1964, Ser. No. 365,371
11 Claims. (Cl. 200—61.3)

1. A switch construction comprising a support member; an actuating member mounted on said support member for rocking movements about an axis; a switching

element connected to said actuating member for movement therewith and having a pair of flexible arms each of which extends substantially radially from said axis; a plurality of spaced apart pairs of fixed contacts supported by said support member in the path of movement of the arms of said switching element, said switching element being of such length that the arms thereof

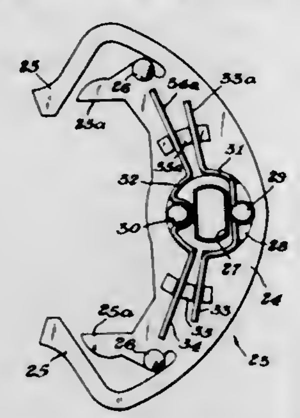

may span the distance between any pair of said contacts; and means supported by said support member in the path of movement of the arms of said switching element for deflecting said arms, thereby enabling engagement of said arms and selected ones of said contacts and preventing engagement between said arms and others of said contacts.

3,397,295
INDUCTION TUBE WELDING APPARATUS
James Hale, Oldbury, England, assignor to Tube Products Limited, Birmingham, England, a British company
Filed Feb. 1, 1965, Ser. No. 429,232
Claims priority, application Great Britain, Feb. 28, 1964, 8,540/64
4 Claims. (Cl. 219—8.5)

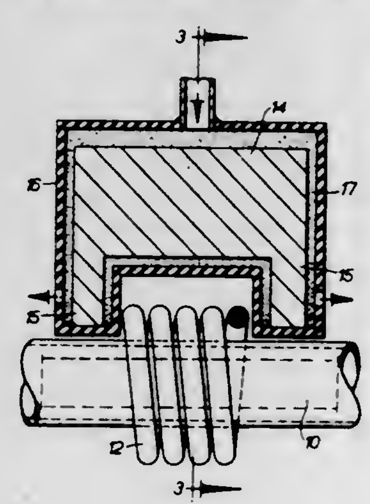

In the manufacture of welded tube by the continuous high frequency induction process employing an induction coil located around the tube a short distance in advance of the weld point an intensifier comprising a bridge of material of high magnetic permeability is located over the induction coil in radial alignment with the converging edges of the strip from which the tube is formed.

3,397,296
HEATING OF SUBSTANCES BY ELECTRICAL ENERGY AT MICROWAVE FREQUENCIES
John Edwin Curran, Rugby, England, assignor to Associated Electrical Industries Limited, London, England, a British company
Filed May 28, 1965, Ser. No. 459,807
Claims priority, application Great Britain, June 2, 1964, 22,798/64
17 Claims. (Cl. 219—10.55)

A method of heating an elongate body such as a sausage, a group of sausages, or a steak by placing the body together with two electrically conductive members located respectively adjacent the opposite ends of the body within a waveguide so that the length of the body is generally parallel to the electric field of the waveguide. The electrically conductive members insure uniform heating of the body.

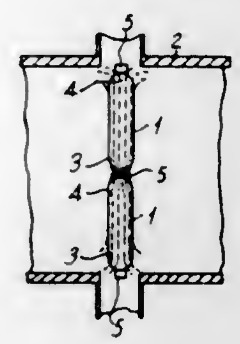

The apparatus includes a waveguide and a source of microwave arranged to transmit energy in the fundamental (H_{10}) mode only. The waveguide is provided with openings in opposite faces and support means extending therethrough.

3,397,297
INDUCTION HEATING APPARATUS
Arthur E. McCorry, Port Hope, Ontario, Canada, assignor to Atomic Energy of Canada Limited, Ottawa, Ontario, Canada, a corporation of Canada
Filed Feb. 24, 1966, Ser. No. 529,855
5 Claims. (Cl. 219—10.69)

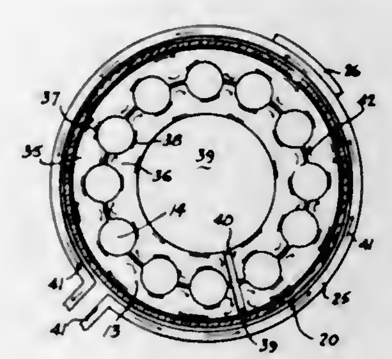

An induction heating apparatus is described which consists of a primary winding for connection to a high frequency alternating current source and within which winding is arranged a susceptor consisting of two rings each defining a set of half coves for cooperating with the half coves in the other ring, and within which coves workpieces to be heated can be inserted. Each ring includes a radial split to allow induced current passage along its circumferential surfaces and around the coves.

3,397,298
WELDING TORCH
Ira V. Nelson, Richland, Wash., assignor to the United States of America as represented by the United States Atomic Energy Commission
Filed Feb. 8, 1965, Ser. No. 431,234
3 Claims. (Cl. 219—75)

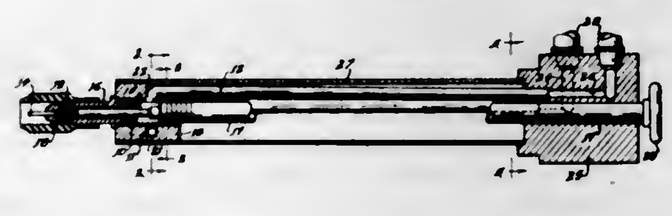

1. In a welder comprising an elongated electrode; a collet embracing an intermediate portion thereof; a holder containing the collet; and a tubular rod containing a portion of the electrode and having one end acting on the collet for urging the same against the holder to make the collet grip the electrode; the combination with the tubular rod and the holder; of a tubular core having the inside of one end connected with the said one end of the tubular rod and the inside of the other end connected with an end of the holder adjacent the said one end of the collet; a coolant tube having two legs extending along the tubular rod and an intermediate portion connecting the legs and curved about the tubular core so as to embrace the same; and a sprayed mass of metal applied to the exterior of the tubular core and extending radially outward sufficiently to completely cover and embed the said intermediate portion of the coolant tube and the adjacent regions of the legs thereof and to provide a thermal bond between the tubular core and the coolant tube.

3,397,299
WELD HEAD LOCATOR
Dazo H. Ciranko, Grand Rapids, Mich., assignor to General Motors Corporation, Detroit, Mich., a corporation of Delaware
Filed Mar. 8, 1965, Ser. No. 437,780
3 Claims. (Cl. 219—86)

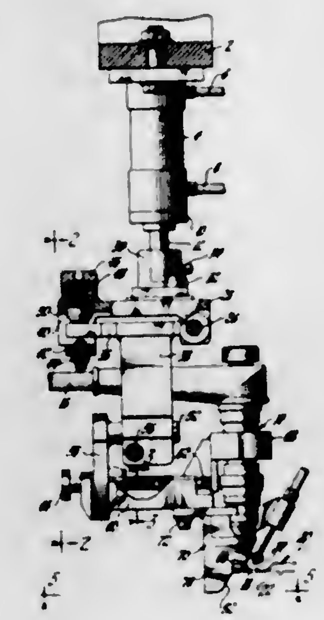

A welding gun is connected to a reciprocating cylinder through an articulated support hinged at a first pivot axis and spring biased in one direction. Motor means are secured to a frame and to the support for moving the support and welding gun toward and away from a workpiece. An indexing cam extending beyond the welding gun is adapted to engage the edge of the workpiece to position the welding gun at a predetermined distance from the edge and as permitted by the hinge. The support includes a second pivot axis at right angles to the first pivot axis and a linear slide for adjusting the welding gun position.

3,397,300
BIASING DEVICE FOR THE SLIDE CARRIAGE OF A BUTT WELDING MACHINE
Hermann Ludwig Schönmann, Geroldswil, Zurich, Switzerland, assignor to H. A. Schlatter A.G., Schlieren, Zurich, Switzerland
Filed Aug. 27, 1965, Ser. No. 483,272
Claims priority, application Switzerland, Aug. 31, 1964, 11,334/64
5 Claims. (Cl. 219—101)

A biasing device for the slide carriage of a butt welding machine in which the advancing movement of the movable carriage is provided by the force of a weight mounted on a lever. This force is transmitted in a second rotating pressure moment to the movable carriage. A locking device blocks the advancement of the slide carriage, when the locking device is in its upper or unlocked position it controls the connection of the welding current. The

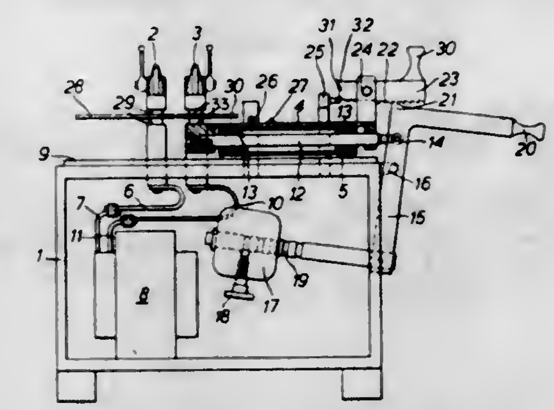

termination of the current is obtained in relation to the preselected slide distance of the carriage in that a contact actuates a disconnection switch.

3,397,301
ELECTRICAL RADIANT HEATER HAVING CELLULAR AIR SHIELD
Nathaniel E. Hager, Jr., Lancaster, Pa., assignor to Armstrong Cork Company, Lancaster, Pa., a corporation of Pennsylvania
Filed June 15, 1967, Ser. No. 646,232
6 Claims. (Cl. 219—345)

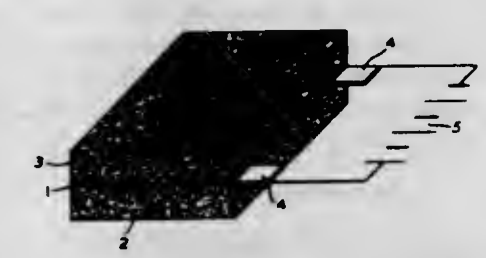

An electric radiant heater has a metallic foil heating element adapted to be operated in the range of 100°–175° F. A 0.25"–1" air shield, transparent to the infrared radiation generated by the heating element and made of foamed or cellular polyethylene, polystyrene or poly (vinyl chloride) is positioned in front of the element to prevent ambient air from contacting the heating element, thereby restricting waste of heat by convection to the surrounding air. The foam air shield is coextensive in area with the heating element and may be either in direct contact with the element of spaced therefrom by a 0.01"–1" thick dead air space.

3,397,302
FLEXIBLE SHEET-LIKE ELECTRIC HEATER
Harry W. Hosford, 2741 Ashley Road, Shaker Heights, Ohio 44122
Filed Dec. 6, 1965, Ser. No. 511,680
2 Claims. (Cl. 219—528)

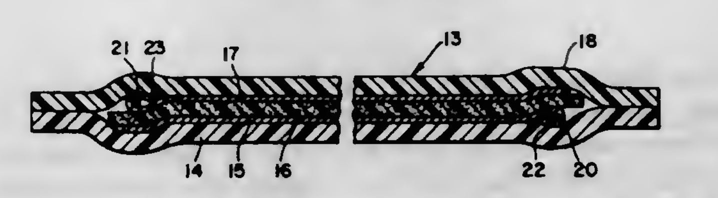

Thin flexible sheet-like electric heating means for aircraft wings, comprising two thin sheets of electrically conductive metal foil substantially equal in area to and disposed on either side of and in direct contact with a thin electric resistance layer of polytetrafluoroethylene

impregnated with carbon particles. A thin outer envelope of polytetrafluoroethylene closely encloses the foregoing assemblage. Current conducting lead wires extend along substantially the entire length of said heating means and respectively connect with said two metal foils.

3,397,303
CONVEYING BELT WITH INTEGRAL ELECTRIC HEATER AND SHEET MEMBER HOLDDOWN MEANS
Edwin L. Smith, Wilmette, Ill., assignor to Bell & Howell Company, Chicago, Ill., a corporation of Illinois
Filed Oct. 23, 1965, Ser. No. 502,973
10 Claims. (Cl. 219—545)

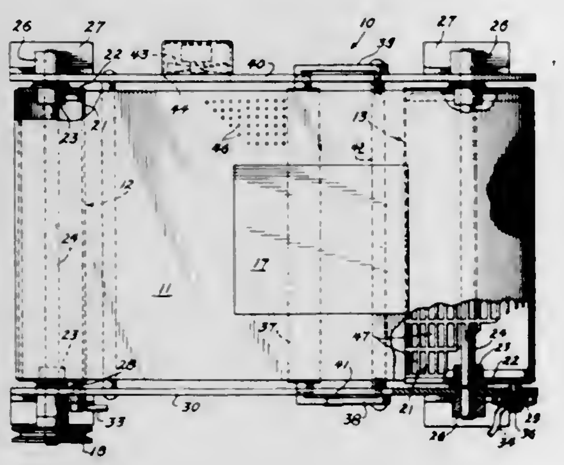

Apparatus for simultaneously conveying and efficiently heating sheet members, including an electrically conductive endless belt heated by an electric current passing therethrough. The endless belt supports the sheet members and they are maintained in good contact therewith by a pressure differential acting on the sheets through the belt.

3,397,304
METHOD AND APPARATUS FOR MEASURING VEHICULAR TRAFFIC
John H. Auer, Jr., Rochester, N.Y., assignor to The General Signal Corporation, Rochester, N.Y., a corporation of New York
Filed Aug. 29, 1963, Ser. No. 305,469
7 Claims. (Cl. 235—150.24)

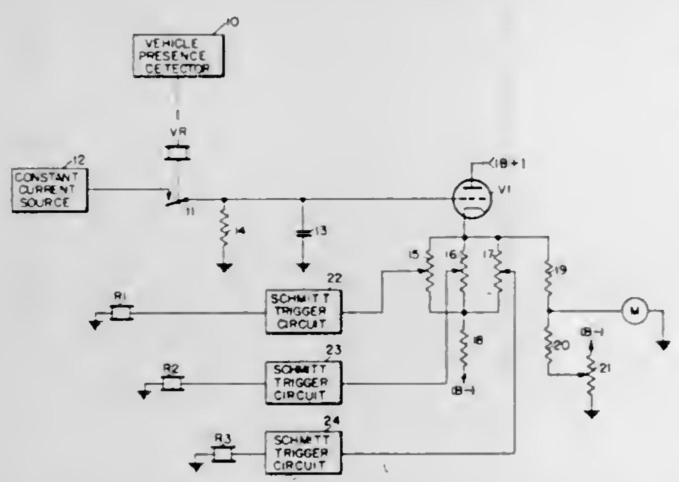

The disclosure relates to apparatus for measuring the traffic parameter of lane occupancy, i.e. percentage of pavement which is vehicle-occupied. A vehicle presence detector controls the addition of signal, at a constant rate, to a signal accumulating means throughout each vehicle detection interval; at the same time, signal is being subtracted continually from the signal accumulating means at a rate proportional to the present value of the signal stored in the signal accumulating means. The magnitude of the stored signal at each moment represents lane occupancy.

3,397,305
METHOD AND APPARATUS FOR MEASURING VEHICULAR TRAFFIC LANE OCCUPANCY
John H. Auer, Jr., Fairport, N.Y., assignor to The General Signal Corporation, Rochester, N.Y., a corporation of New York
Continuation-in-part of application Ser. No. 305,469, Aug. 29, 1963. This application Aug. 14, 1964, Ser. No. 389,588
18 Claims. (Cl. 235—150.24)

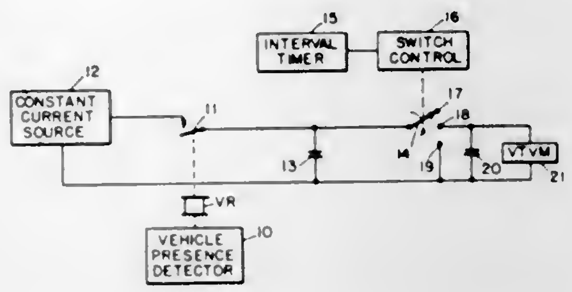

In one form, a capacitor is charged from a constant current source to add equal increments of charge for each increment of time a vehicle is detected at a given point in the highway. An interval timer periodically transfers the charge to said capacitor to another smaller capacitor and then discharges the first capacitor before beginning the next timed interval. Each timed interval is of course greater than the longest expected time of occupancy of the given point by a single vehicle. The signal across the smaller capacitor is of a value representative of lane occupancy for the successive intervals timed.

Another form provides a periodic pulse generator for repeatedly operating a shift register through its several steps. A vehicle detector registers that it is present during one or more of the periodic pulses by specially controlling the corresponding steps of the shift register during such pulses. The total number of specially controlled steps related to the total number of steps in the shift register gives the represented lane occupancy signal.

Other forms have somewhat different structure, but all forms are for providing a lane occupancy signal.

3,397,306
APPARATUS FOR UPDATING RUNNING AVERAGE OF MEASURED TRAFFIC PARAMETER
John H. Auer, Jr., Fairport, N.Y., assignor to General Signal Corporation, Rochester, N.Y., a corporation of New York
Filed Dec. 1, 1964, Ser. No. 415,108
8 Claims. (Cl. 235—150.24)

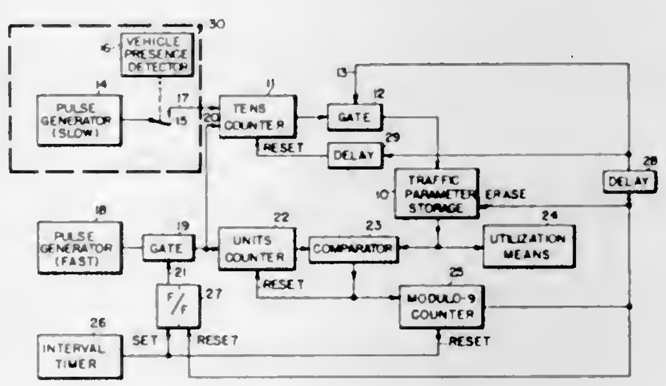

A system for maintaining a running average traffic parameter per time interval for a predetermined number of time intervals in a digital storage wherein a vehicle presence detector means generates a number of input pulses for an accumulator, the number of pulses accumulated being the number of input pulses divided by the number of time intervals for which the average is maintained. Once during each interval, additional input pulses are supplied to the accumulator in an amount corresponding to the digital storage at that time multiplied by one less than the number of time intervals for which the running average is provided. After the accumulator has been thus corrected, the digital value in the storage means is updated by gating means connecting its input to the output of the accumulator.

3,397,307
HEADLAMP UNITS
Pierre Cibie, 17 Rue Valentine, Bobigny, Seine-St.-Denis, France
Filed Mar. 3, 1965, Ser. No. 436,889
Claims priority, application France, Mar. 23, 1964, 968,320
2 Claims. (Cl. 240—41.3)

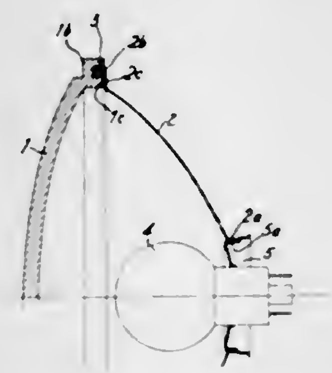

A motor vehicle headlamp unit comprising a headlamp lens, a metallic reflector and a light source support. The outer peripheral edge of the reflector is formed as an annular strip engaged in a corresponding annular groove in the lens and imbedded in a suitable jointing material in the groove so as to be protected against corrosion. The inner periphery of the reflector also forms an annular strip engaged in a corresponding annular groove formed in the light source support, and imbedded in a jointing material in the groove in the light source support so as to be protected against corrosion.

3,397,308
LIGHTING FIXTURE
George P. Wakefield, Harvey H. Vick, and Ned Buckner, Vermilion, Ohio, assignors to International Telephone and Telegraph Corporation, New York, N.Y., a corporation of Maryland
Filed Oct. 19, 1966, Ser. No. 587,724
7 Claims. (Cl. 240—128)

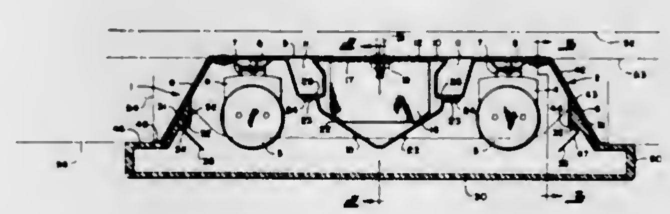

A lighting fixture having a housing with downwardly, outwardly sloping side walls for mating engagement by upper complementary tapered sides of a refractor. Refractor retaining latches on the housing yieldably urge the upper tapered sides of the refractor into firm seating engagement with the downwardly tapered sides of the housing.

3,397,309
SPEED LIMIT CONTROL SYSTEM
David W. Stone, Hales Corners, Wis., assignor to Harnischfeger Corporation, West Milwaukee, Wis., a corporation of Wisconsin
Filed July 19, 1965, Ser. No. 472,961
6 Claims. (Cl. 246—182)

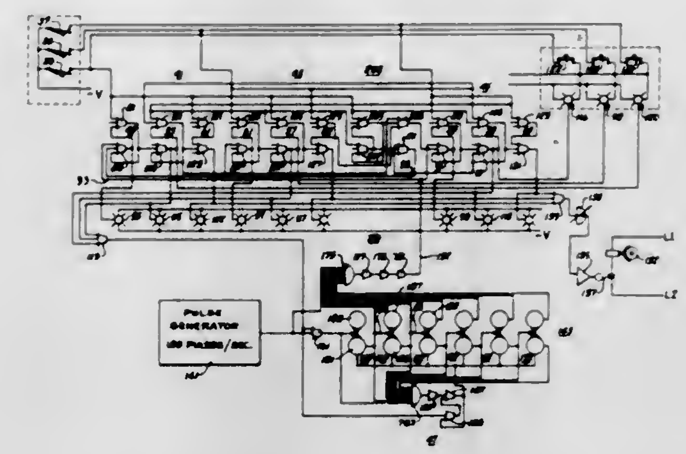

A speed limit control system for a vehicle includes a plurality of sensing means operable indicators placed in the path of the vehicle A control means is connected to the sensing means and includes a timer having a predetermined timing interval. Actuation of the control means by the sensing means operates the timer to determine whether the vehicle has traversed the distance between two adjacent indicators in a time period greater or less than the timing interval, and hence the speed of the vehicle. The speed limit control system is provided with additional control means so that if the first fails to operate, the second or third will provide the necessary speed limiting action.

3,397,310
ATOMIC BEAM APPARATUS
Joseph H. Holloway, Topsfield, Mass., and Joseph W. Anderson, Manor, Pa., assignors, by mesne assignments, to Hewlett-Packard Company, Palo Alto, Calif., a corporation of California
Original application Oct. 29, 1962, Ser. No. 233,573. Divided and this application Oct. 24, 1966, Ser. No. 589,072
1 Claim. (Cl. 250—41.3)

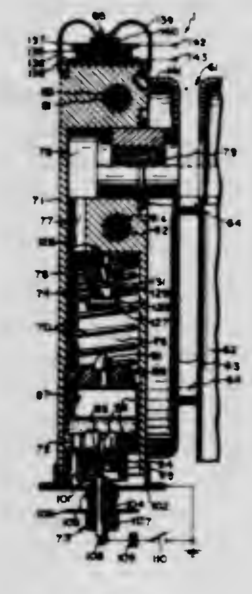

A cesium beam tube has a cesium ampule which is ruptured after evacuation of the tube by means of an electrical discharge which vaporizes a thin walled portion of the ampule.

3,397,311
BROAD-BEAM MASS SPECTROMETER HAVING PARTICLE ENERGY SELECTION MEANS
John M. Saari, Mercer Island, and Richard L. Schoen, Kent, Wash., and Irving E. Dayton, Bozeman, Mont., assignors to The Boeing Company, Seattle, Wash., a corporation of Delaware
Filed Feb. 12, 1965, Ser. No. 432,244
3 Claims. (Cl. 250—41.9)

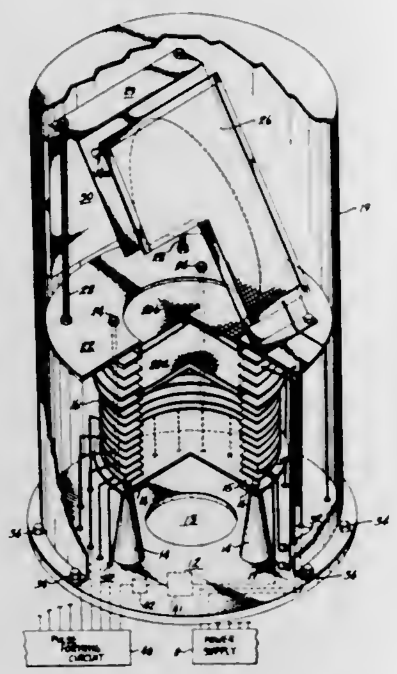

An apparatus for selecting ions of predetermined masses having an ion source producing pulses of ions. Electrodes defining the ion source are energized to impart substantially constant momentum to the ions in a first direction. A transparent intercepting grid imposes a force on the ions in a second direction parallel but opposite to the first direction so that only those ions exceeding a predetermined energy level pass through the intercepting grid. Of these ions, those below a predetermined energy level are reflected by a second intercepting grid to a collector electrode to be measured.

3,397,312
LAMINATED X-RAY ANALYZING CRYSTAL WHEREIN THE RESPECTIVE LAMINATIONS HAVE DIFFERENT LATTICE SPACINGS
Hiroshi Okano, Hachioji-shi, Tokyo-to, Japan, assignor to Kabushiki Kaisha Hitachi Seisakusho, Chiyoda-ku, Tokyo-to, Japan, a joint-stock company of Japan
Filed Aug. 16, 1965, Ser. No. 479,784
Claims priority, application Japan, Aug. 15, 1964, 39/46,925
1 Claim. (Cl. 250—51.5)

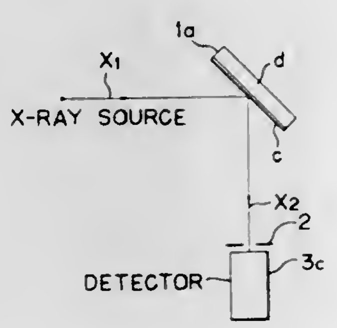

An X-ray analysis detecting device which has an analyzing element consisting of a first analyzing crystal having relatively narrow lattice spacing, laminated to a second analyzing crystal of comparatively wide lattice spacing, so that X-rays emitted from a specimen are diffracted at these crystals corresponding to their wavelengths. The detecting device comprises two different detectors having energy resolving power, whose output is connected to a pulse height analyzer. The analysis wave-length ranges of the latter are changeable in cooperation with changing operation of the two detectors.

3,397,313
APPARATUS FOR TRANSDUCING INFRA-RED IMAGES INTO VISIBLE IMAGES UTILIZING A LIQUID LIGHT CONTROL LAYER
Fred Mast, Zurich, Switzerland, assignor to Gretag Aktiengesellschaft, Regensdorf, Switzerland
Filed June 18, 1965, Ser. No. 465,041
Claims priority, application Switzerland, June 25, 1964, 8,319/64
32 Claims. (Cl. 250—83)

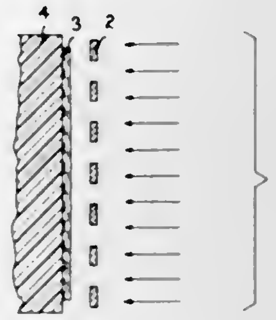

Apparatus for transducing an infra-red image into a visible image, having a liquid layer, an optical system for projecting an infra-red image on to said layer and a grating interposed between said optical system and said layer. The ratio of the period of the grating to the thickness of the liquid layer is chosen within the range of at least 2π, preferably 100 to 300. As a result of said ratio the liquid layer can be locally deformed according to the intensity pattern of the infra-red radiation to produce an image in relief. The deformed layer being used to control visible light projected on to the layer and reflected therefrom through, for example, a Schlieren or phase-contrast optical system.

3,397,314
INFRARED IMAGING SYSTEM COMPRISING AN ARRAY OF IMMERSED DETECTOR ELEMENTS
Seymour L. Weiner, Stamford, Conn., assignor to Barnes Engineering Company, Stamford, Conn., a corporation of Delaware
Filed May 18, 1966, Ser. No. 551,100
11 Claims. (Cl. 250—83)

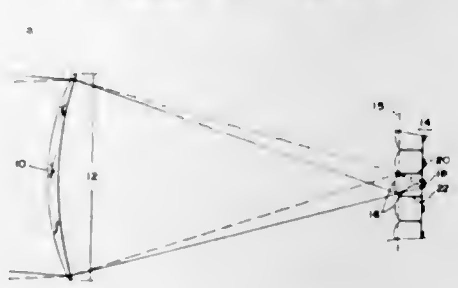

1. An infrared imaging system using a plurality of contiguous elemental fields which provide excellent field definition with minimal cross-talk and minimal gaps between adjacent elemental fields, comprising
(a) a long focal length optical means defining an entrance aperture for the infrared imaging system,
(b) an array of infrared detectors,
(c) each of said detectors in said array having a detector element immersed on an immersion lens,

(d) said immersion lenses being positioned in abutting relationship and in the focal plane of said optical means such that each lens acts as a field lens which images the entrance aperture of the system on its associated detector element to form contiguous elemental fields of the entrance aperture with minimal gaps between the elemental fields.

3,397,315
METHOD AND APPARATUS FOR EVALUATING THE PRINTING SPEED OF DIAZOTYPE MATERIALS
Robert C. Johnston, Binghamton, N.Y., assignor to Defiance-Azon Corporation, Johnson City, N.Y., a corporation of Massachusetts
Filed May 11, 1966, Ser. No. 549,291
7 Claims. (Cl. 250—83.3)

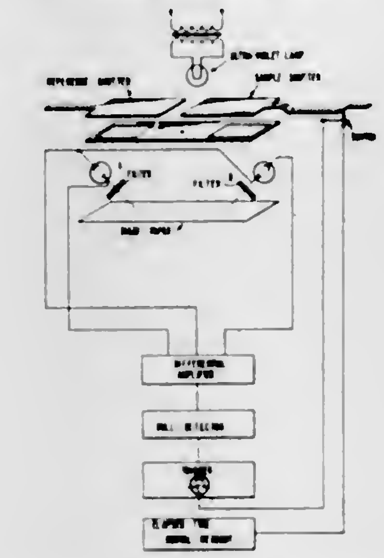

1. The method of determining the printing speed of diazo coated materials, such as paper, which comprises exposing a first portion of said material to radiation predominantly in the ultraviolet spectrum from a fixed source for a preset time, thereafter exposing a second portion of said material to said source while continuing exposure of said first portion, initiating the start of an elapsed time counter upon exposure of said second portion, photoelectrically sensing each of said portions and automatically stopping said counter when the photoelectric sensing of said second portion matches that of said first portion, the elapsed time indication of said counter representing a measure of the printing speed of said material.

3,397,316
OPTICAL FREQUENCY-CHANGING DEVICES AND MATERIALS FOR USE THEREIN
Michael R. Brown, Highcliffe, William Brian Nash, Southbourne, and Geoffrey Phillips, Highcliffe, England, and William A. Shand, Huntly, Scotland, assignors to Minister of Aviation in Her Britannic Majesty's Government of the United Kingdom of Great Britain and Northern Ireland, Strand, London, England
Filed Sept. 18, 1964, Ser. No. 397,403
Claims priority, application Great Britain, Oct. 22, 1963, 41,685/63; Jan. 28, 1964, 3,587/64; Mar. 26, 1964, 12,830/64
24 Claims. (Cl. 250—213)

Impurity ions of dysprosium, praseodymium, terbium, erbium holmium or neodymium in a triply ionized state are introduced into a host lattice of one of the fluoride crystals, lanthanum fluoride, calcium fluoride, strontium fluoride or barium fluoride, in concentrations of between one and thirty atomic percent.

Incident radiations of different specific frequencies raise the energy of the impurity ions from the ground state in at least two stages via one or more separate and distinct intermediate levels to a higher level. In returning to the ground state the electrons give up this energy by emitting radiation at a frequency different to the incident frequencies.

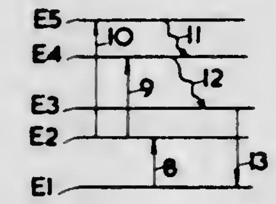

A number of crystals may be formed into a mosaic or into fibres or pipes to form an image converter in which for example a visible image may be formed from an infra-red image.

3,397,317
SELF-REGULATING PHOTOELECTRIC CIRCUIT
Peter Dosch, Jona, Switzerland, assignor to Heberlein & Co. A.G., Wattwil, Switzerland, a corporation of Switzerland
Filed Dec. 13, 1965, Ser. No. 513,195
Claims priority, application Switzerland, Dec. 16, 1964, 16,259/64
5 Claims. (Cl. 250—219)

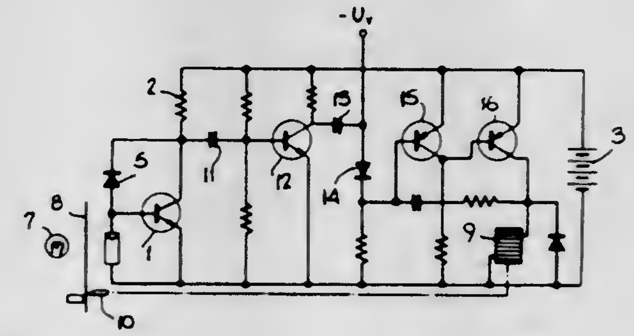

1. In a photoelectric circuit, a transistor having a base terminal, a collector terminal, and an emitter terminal, a photovoltaic cell of the type which generates a voltage according to incident light energy, means connecting said photovoltaic cell between the emitter and base terminals in a direction such that voltages produced by it in response to incident light energy tend to force current in a reverse direction through said transistor, and a logarithmic element connected between the collector and base terminals of said transistor.

3,397,318
ABLATION SENSOR
Archibald R. Sinclair, Hampton, and James M. Russell III, Newport News, Va., assignors to the United States of America as represented by the Administrator of the National Aeronautics and Space Administration
Filed June 9, 1965, Ser. No. 462,763
3 Claims. (Cl. 250—227)

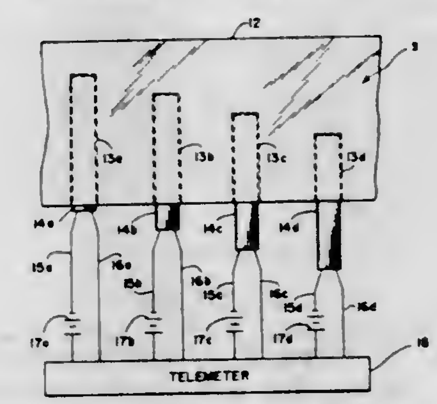

A sensor for measuring the rate of ablation and the temperature of an ablation material on the surface of a vehicle reentering the atmosphere from space. Light pipes are embedded in the surface of the ablation at various

levels. When the ablation material burns to the successive levels of the light pipes, the incandescence of the burning is conveyed through the light pipes to photo-sensors whose outputs are indicative of the burning rate. Calibration of the output also provides a temperature reading at the area of charring.

3,397,319
DIFFERENTIAL PRESSURE INDICATOR AND SWITCH
John P. Locke, Michigan City, Ind., assignor to F. W. Dwyer Mfg. Co., a corporation of Illinois
Filed Mar. 31, 1966, Ser. No. 539,151
12 Claims. (Cl. 250—231)

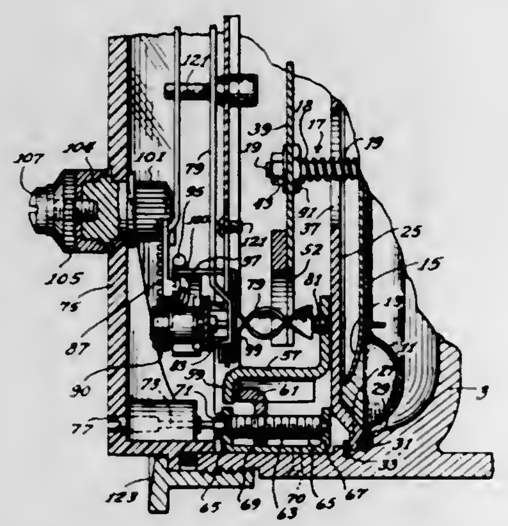

1. A pressure switch comprising
(a) pressure sensitive means adapted to move with change in pressure;
(b) a light interrupting member;
(c) a light source on one side of said light interrupting member;
(d) a photosensitive device on the other side of said light interrupting member, said device conducting current when exposed to the light source and being a non-conductor when not exposed to the light source;
(e) a rotatably mounted magnetized helical core;
(f) a magnetic armature operatively mounted with relation to said core, said armature being mounted at the free end of a cantilever spring which is rigidly mounted at its other end;
(g) said spring being operatively connected to said pressure sensitive means in such manner as to cause the free end thereof and the armature mounted thereon to move in unison with said pressure sensitive means;
(h) said interrupting member being mounted to rotate in unison with said helical core and being sized and positioned so as to move into and out of the straight line path between said light source and photosensitive device upon predetermined positions of said armature;
(i) means for connecting said light source to a source of electric potential;
(j) means for connecting said photosensitive device to a source of electric potential; and
(k) means for connecting said photosensitive device in series with a relay.

3,397,320
TERMINAL BLOCK MOUNTING MEANS FOR PLUG-IN TYPE PHOTOELECTRIC CELL
Hans Ege, Chicago, Ill., assignor to Underwriters Safety Device Co., Chicago, Ill., a corporation of Illinois
Filed Oct. 21, 1965, Ser. No. 499,618
4 Claims. (Cl. 250—239)

1. A terminal block particularly adapted for blind insertion into a mounting socket, said terminal block comprising a body portion having a transverse surface at one end and a laterally projecting flange at an opposite end, a plurality of terminal openings at said opposite end adapted to receive connectors projecting from a photoelectric cell unit, a pair of cam surfaces formed on opposite sides of said body, a pair of elongated fasteners extending through said laterally projecting flange in substantial longitudinal alignment with each of said cam surfaces, a cam follower member disposed over each of

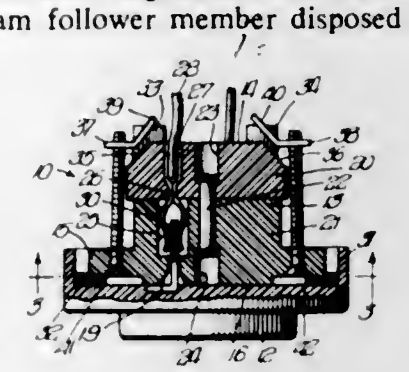

said cam surfaces, thread means formed in each of said cam follower members, each of said thread means cooperating with thread means formed on each of said elongated fasteners whereby rotation of said fasteners will cause said cam follower members to be drawn into engagement with said cam surfaces, and means on said cam follower adapted to engage a portion of said mounting socket for rigidly mounting said terminal block therein.

3,397,321
POWER CONTROL APPARATUS
Robert A. Niemann, Roanoke, Va., assignor to General Electric Company, a corporation of New York
Filed Apr. 22, 1965, Ser. No. 450,131
3 Claims. (Cl. 307—31)

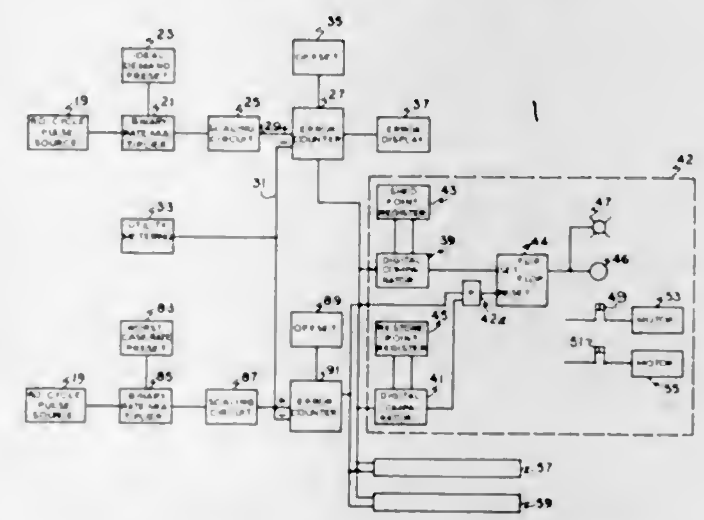

In an electrical power system, pulses indicating the ideal rate of power use are added and pulses indicating the actual rate of power use are subtracted in a counter. The difference continuously indicates whether power use should be decreased or may be increased without exceeding a demand limit. When the maximum possible power use offset by the demand limit exceeds the actual power use, the power use need not subsequently be decreased during that demand period.

3,397,322
PORTABLE RESISTANCE SPOT WELDER
Raymond P. Wolgast, 3726 Kipling Road, Berkley, Mich. 48072
Filed Jan. 25, 1965, Ser. No. 427,679
8 Claims. (Cl. 307—141)

1. A control circuit for a welding transformer having a primary winding in circuit with a source of line voltage, a first switch for controlling current flow through said

primary winding of said welding transformer, a control transformer having a primary winding in parallel circuit with said primary winding of said welding transformer, a first relay coil for actuating said first switch, first circuit means for connecting said first relay coil in circuit with the secondary winding of said control transformer, said first circuit means including a control switch and a second switch for controlling current flow through said first relay coil, second circuit means in circuit with said secondary winding of said control transformer in parallel to said first relay coil, said second circuit means including a charging capacitor and a variable potentiometer for regulating the time rate of voltage build up on said charging capacitor, a transistor, and a voltage responsive device for switching said transistor, said charging capacitor establish-

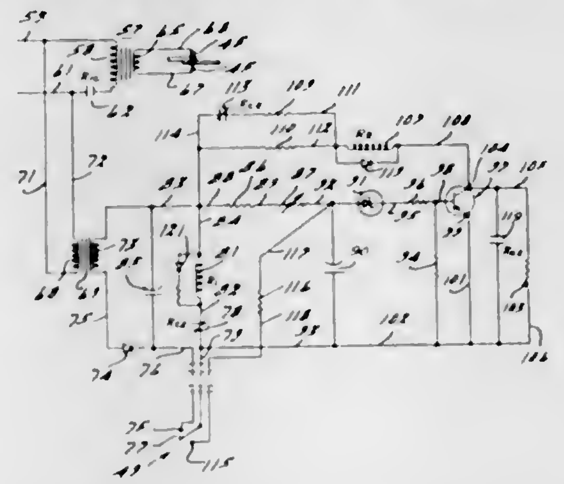

ing the voltage potential at which the voltage responsive device will operate, a resistor in parallel circuit with the collector emitter circuit of said transistor for limiting the potential upon said transistor, third circuit means in circuit with said transistor for experiencing current flow when said transistor is switched, a second relay coil in said third circuit means, a pair of resistors in parallel circuit with each other and in series circuit with said second relay coil, a third switch in series with one resistor of said pair of resistors, means for opening said second and said third switches upon a predetermined current flow through said second relay coil for interrupting the current flow through said first relay coil to open said first switch, and means for discharging said capacitor upon the cessation of current flow through said first relay coil.

3,397,323
TIMER
James A. Hirsch, Indianapolis, Ind., assignor to P. R. Mallory & Co. Inc., Indianapolis, Ind., a corporation of Delaware
Filed Mar. 24, 1966, Ser. No. 537,111
9 Claims. (Cl. 307—141)

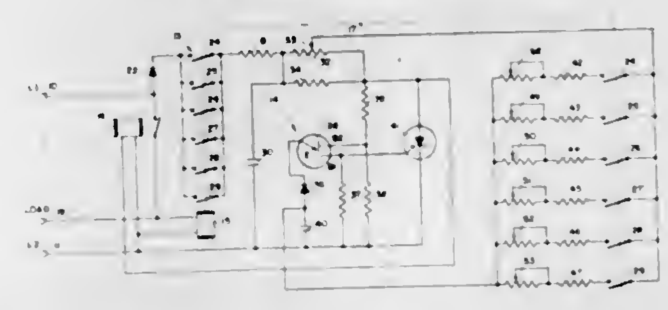

1. A timer comprising: a power source; a relay means for applying power from said power source to a load and for energizing a solenoid; an electronic switching means for operating said relay means so as to remove power from said load and deenergize said solenoid; a timing circuit for energizing said electronic switching means after a predetermined time, said timing circuit being connected to said electronic switching means; a plurality of timing networks for determining different time intervals for said timing circuit, said timing networks being connected to said timing circuit; a plurality of switches, each of said switches having a first contact member for energizing said relay means and a second contact member for connecting one of said timing networks to said power source so as to energize said timing circuit, said switches being connected to said power source and in circuit with said relay means and said timing networks; and means for latching said switches in an actuated position when said relay is energized, said latching means being connected to and operated by said solenoid so as to release said switches when said relay means is deenergized.

3,397,324
PEAK AMPLITUDE TO R.M.S. LIMITER
Laughton T. Fine, Cincinnati, Ohio, John L. Dennis, Lexington, Ky., and Gerald B. Bay, Cincinnati, Ohio, assignors to Avco Corporation, Cincinnati, Ohio, a corporation of Delaware
Filed Apr. 14, 1965, Ser. No. 448,178
12 Claims. (Cl. 307—237)

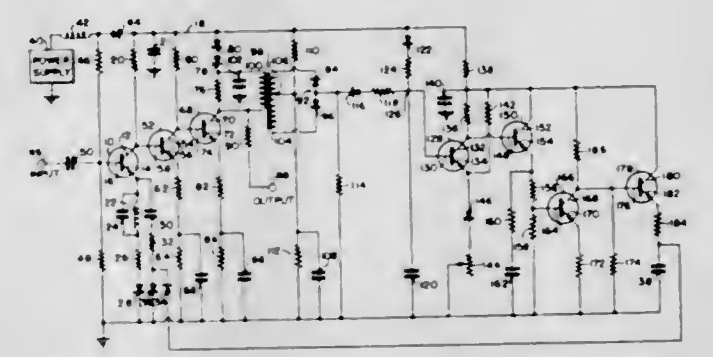

An I.F. amplifier is provided with a variable impedance device in its first stage. The second and third stages of the I.F. amplifier include saturable transistor amplifiers arranged for negative and positive signal limiting at a preset level above a desired R.M.S. level. A portion of the output derived from the amplifier is full wave rectified to derive a pulsating direct voltage which is then applied to a piece-wise square law detector. The output of the square law detector after amplification is used to control the variable impedance in the first stage amplifier to maintain a constant signal R.M.S. value and a fixed ratio between the signal R.M.S. value and the level of the signal limiting.

3,397,325
SENSOR ARRAY COUPLING CIRCUITS
Paul K. Weimer, Princeton, N.J., assignor to Radio Corporation of America, a corporation of Delaware
Filed Dec. 30, 1965, Ser. No. 517,702
3 Claims. (Cl. 307—251)

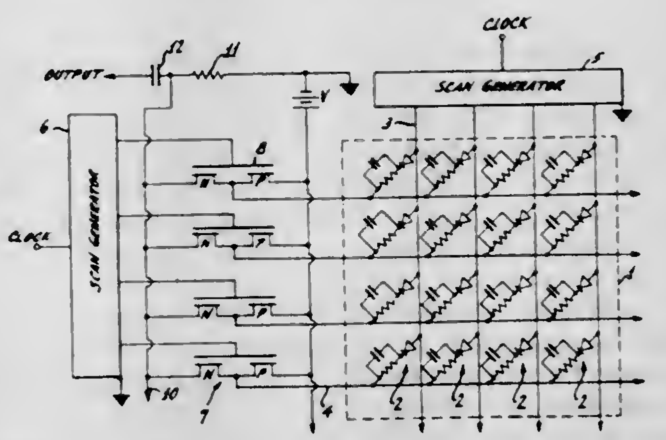

A signal gating circuit having a complementary field-effect transistor pair having a control electrode connected to a source of a control signal for concurrently turning

off one transistor and turning on the other transistor. The transistors are connected in series between a bias source and an output signal line while an input signal line is connected to the junction of the transistors.

3,397,326
BIPOLAR TRANSISTOR WITH FIELD EFFECT BIASING MEANS
Robert C. Gallagher, Catonsville, Md., and Robert P. Donovan, Durham, N.C., assignors to Westinghouse Electric Corporation, Pittsburgh, Pa., a corporation of Pennsylvania
Filed Mar. 30, 1965, Ser. No. 443,810
5 Claims. (Cl. 307—304)

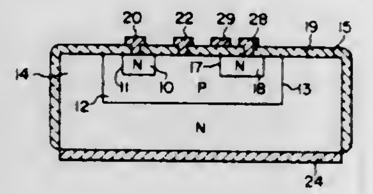

Semiconductor transistor structures wherein an extra region forming a p-n junction with the base region provides control over the current level in the base region by utilizing surface potential control of the junction's reverse characteristic.

3,397,327
THERMOELECTRIC CONVERSION PROCESS AND APPARATUS
Ralph Forman, Rocky River, Ohio, John A. Ghormley, Oak Ridge, Tenn., and Robert L. Cummerow, Hartsdale, N.Y., assignors to Union Carbide Corporation, a corporation of New York
Original application Mar. 20, 1962, Ser. No. 182,707, now Patent No. 3,322,977, dated May 30, 1967. Divided and this application Aug. 5, 1966, Ser. No. 570,575
6 Claims. (Cl. 310—4)

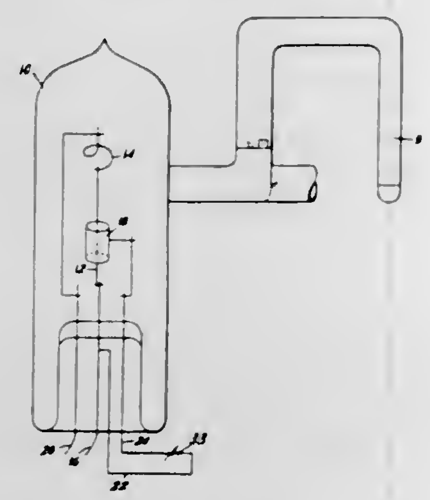

1. A thermionic converter comprising a cathode and an anode disposed in an ionizable gas, said cathode having a thermionic work function greater than the thermionic work function of said anode and being electrically connected to said anode through an external load circuit, the temperature of said cathode being sufficiently high to effect thermionic emission therefrom and the temperature of said anode being below the temperature of said cathode and sufficiently low that the thermionic emission from said anode is negligible in comparison with the thermionic emission from said cathode; a material having nuclei with a high cross section for an n, p or n, alpha reaction disposed within said ionizable gas; and means for irradiating said material with slow neutrons so as to produce charged particles which ionize said ionizable gas, the pressure of said gas and the dose rate of said charged particles being sufficient to produce an ion concentration sufficiently high to make the current output of said converter temperature dependent.

3,397,328
VOLTAGE GENERATION UTILIZING PIEZOELECTRIC EFFECTS
Hugo W. Schafft, Des Plaines, Ill., assignor to Motorola, Inc., Franklin Park, Ill., a corporation of Illinois
Filed June 14, 1966, Ser. No. 557,508
10 Claims. (Cl. 310—8.1)

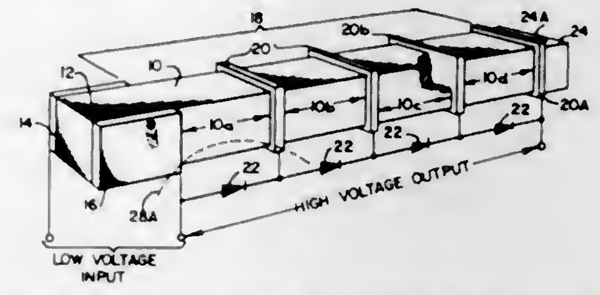

1. For generating an electric voltage wave, in combination:

piezoelectric means including a capacitance and having first and second end portions and a middle portion betwen the end portions,

means form introducing a mechanical stress into the piezoelectric means in said one end portion such that the stress travels through the middle portion to said second end portion,

a plurality of electrode means spaced apart along the middle portion such that a shock wave traveling therealong piezoelectrically generates electrical voltages between adjacent electrode means,

and a series electrical circuit interconnecting the electrodes and including a plurality of rectifiers respectively connecting adjacent electrodes such that generated voltages between adjacent electrodes of a first polarity are shunted out while electrical voltages of a second plurality are blocked by the rectifiers and stored in capacitance of the piezoelectric means and the combination being such that the summation of the stored voltages appear across such series circuit.

3,397,329
MEASURING SYSTEM
John C. Riedel, Pasadena, Calif., assignor to Endevco Corporation, Pasadena, Calif., a corporation of California
Filed Oct. 19, 1964, Ser. No. 404,608
14 Claims. (Cl. 310—8.4)

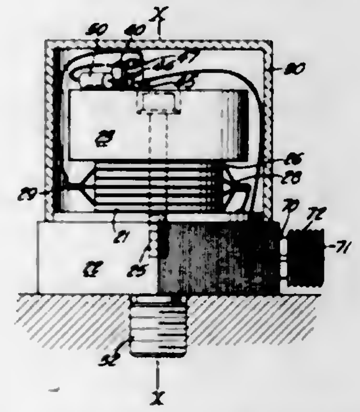

A safe-to-use motion detecting system is provided which employs a ceramic piezoelectric accelerometer and a solid-state switching device. Excessive motion is detected when the voltage generated by the piezoelectric accelerometer is developed at a rate above a predetermined rate and this voltage attains a value in excess of a predetermined level. A resistor is connected across a ceramic piezoelectric element to avoid misfiring from pyroelectric effects. The piezoelectric element and the solid-state switching device are mounted in thermally conductive relation to render the action of the motion detector independent of temperature and are mounted in a metal housing to preserve calibration and to avoid misfiring from electrostatic fields.

3,397,330
MAGNETOHYDRODYNAMIC ELECTRIC POWER GENERATOR
Eiichi Hori, Kokubunji-shi, and Motokazu Uchida, Setagaya-ku, Tokyo-to, Japan, assignors to Kabushiki Kaisha Hitachi Seisakusho, Chiyoda-ku, Tokyo-to, Japan, a joint-stock company of Japan
Filed May 4, 1965, Ser. No. 453,141
Claims priority, application Japan, May 6, 1964, 39/25,340
3 Claims. (Cl. 310—11)

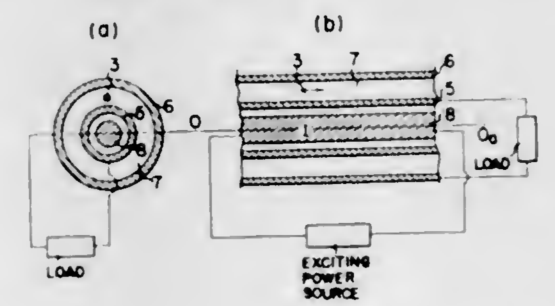

A magnetohydrodynamic electric power generator which has a longitudinal linear field-exciting conductor, a combination of inner and outer conductive cones or cylinders enclosing said conductor thus forming a passage for a working fluid; further means to apply an exciting current through the conductor to establish a circular exciting magnetic field about the conductor; means for causing the working fluid to flow through the passage and to interact with the magnetic field thus inducing an electromotive force across the passage; and means to lead that force out through the cylinders or cones or circuit leads parallel thereto so as to cause the direction of the resulting current flowing therethrough to produce a flux to aid that produced in the duct by said field exciting conductor.

3,397,331
ELECTRODE STRUCTURE FOR A MAGNETO-HYDRODYNAMIC DEVICE
Kurt Burkhard, Woburn, Mass., assignor to Avco Corporation, Cincinnati, Ohio, a corporation of Delaware
Filed July 20, 1965, Ser. No. 473,306
15 Claims. (Cl. 310—11)

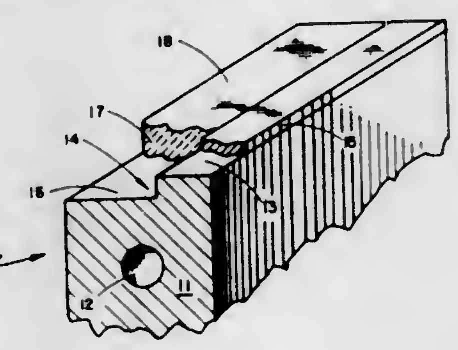

1. An electrode for a magnetohydrodynamic device of the type in which the electrode is exposed to high temperature corrosive fluids comprising:

(a) a metallic base member one end of which is adapted to be disposed adjacent said fluid;

(b) a metal the oxide of which is electrically conductive exposed to said fluid and covering a portion of said end; and

(c) a refractory material exposed to said fluid and covering substantially the remainder of said end.

3,397,332
JOURNAL ROLLING BEARING INCLUDING A SEGMENTED CAGE
Alfred Pitner, Paris, France, assignor to Nadella S.A., Rueil-Malmaison, Seine-et-Oise, France, a French body corporate
Filed June 1, 1966, Ser. No. 554,558
Claims priority, application France, July 1, 1965, 23,047
8 Claims. (Cl. 310—90)

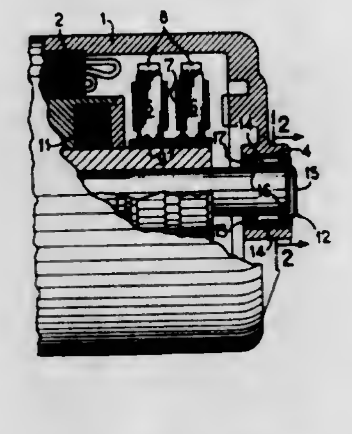

In an electric machine having a housing and a rotating part, the provision of a rolling bearing between the rotating part and the housing, this bearing having a rolling member-retaining segmented cage having an axial gap the relative circumferential dimensions of the inner raceway and cage being such that the gap is maintained irrespective of the radial position and shape of the cage in the bearing.

3,397,333
ELECTRICAL TEMPERATURE SENSORS WITH CONNECTED HEAT CONDUCTIVE MEANS
Edward P. Jastram, Rehoboth, and Harry M. Landis, Norton, Mass., assignors to Texas Instruments Incorporated, Dallas, Tex., a corporation of Delaware
Filed Nov. 10, 1965, Ser. No. 507,102
15 Claims. (Cl. 310—68)

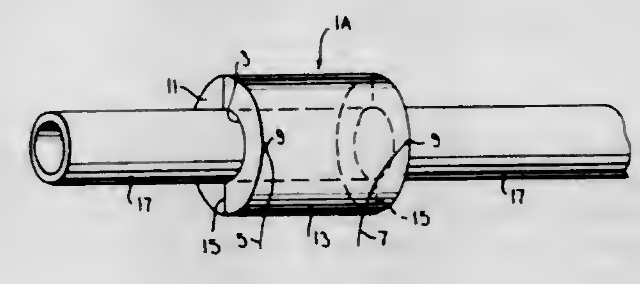

A small sleeve of solid electrically conductive material which has a substantial temperature coefficient of resistance. The preferred material is one selected from the group consisting of ceramic semiconductors, plastic semiconductors and ionic conductors. The sleeve has one or more signal leads electrically connected with it. Extending through the sleeve in heat conductive interior contact therewith is a heat conductive wire, rod, tube or the like for conducting heat from a distance to the sensor element. In one form of the invention the sleeve is an integral solid cylinder and in another it is composed of two semicylindrical parts which are metallurgically bonded to one another to form a complete cylinder.

3,397,334
ELECTROLUMINESCENT LAMP WITH ALTERNATIVELY DEFINED AND UNDEFINED INDICIA
James F. Motson, 798 Welsh Road, Huntingdon Valley, Pa. 19006
Filed Jan. 6, 1967, Ser. No. 607,725
4 Claims. (Cl. 313—108)

The present invention provides a "transparent" elec-

trode means which enables indicia to be defined when

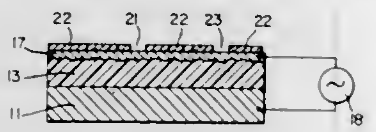

the lamp is lighted, or energized, and undefined when the lamp is de-energized.

3,397,335
SAFETY REFLECTIVE HEADLIGHTS
Francis E. Peek, 720 E. Three Fountains Drive, Murray, Utah 84107
Filed Oct. 3, 1966, Ser. No. 583,663
8 Claims. (Cl. 313—111)

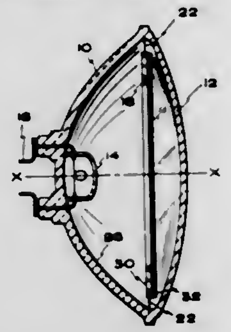

1. A headlight having conically shaped sidewalls, light source means secured to said sidewalls proximate their apex for producing light; a reflective surface, positioned in the opening between said sidewalls having a front face which is positioned away from said light source, a back face which is positioned towards said light source, and an open central portion; attaching means secured to the periphery of said reflective surface and imbedded in said sidewalls for fixedly positioning the reflective surface between the conically shaped sidewalls with an annulus between the periphery of the reflective surface and said sidewalls; and luminescent means connected to said front face of said reflective surface for illuminating said front face of said reflective surface when light is directed upon said luminescent means.

3,397,336
TARGET ROTATABLE BY TUBULAR MEMBER OF DEFORMABLE, SHAPE-RETAINING MATERIAL
Warren C. Davis, Cohasset, and Gordon R. Spencer, Westwood, Mass., assignors to Raytheon Company, Lexington, Mass., a corporation of Delaware
Filed Mar. 6, 1967, Ser. No. 620,751
6 Claims. (Cl. 313—146)

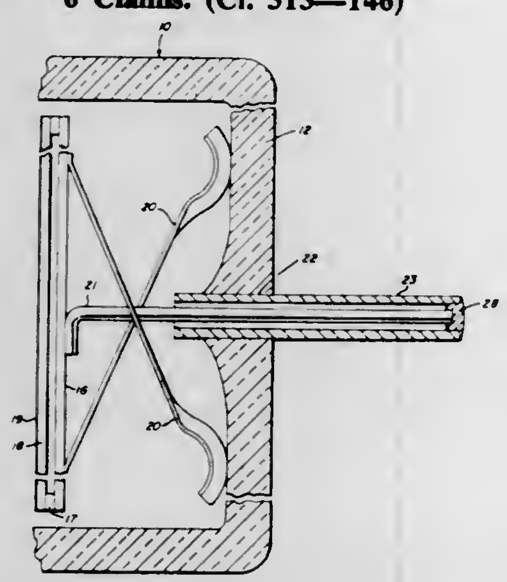

An adjustable target support for cathode ray tubes comprising a pin-like projection extending from the rear surface of a target and extending freely through an opening in the wall of the tube envelope, and a thin metal sheath fixed at one end to the envelope around the opening and enclosing the outer end portion of the projection, the sheath being secured at its other end to the outer end of the projection and being of a flexible, deformable metal capable of being twisted so as to rotate the projection and target thereon whereby the target may be adjusted with respect to an impinging electron beam trace.

3,397,337
FLASH X-RAY DIELECTRIC WALL STRUCTURE
Alec S. Denholm, Lexington, Mass., assignor to Ion Physics Corporation, Burlington, Del., a corporation of Delaware
Filed Jan. 14, 1966, Ser. No. 520,690
8 Claims. (Cl. 313—250)

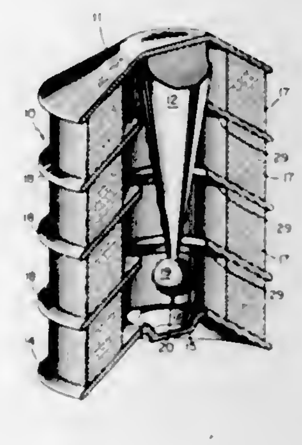

A flash X-ray tube comprising an evacuated envelope containing a field emission cathode and an opposing anode wherein the wall forming the envelope is composed of insulating ring segments rhombic in cross-section alternated with hollow conical frustums forming ring shielding equipotential planes.

3,397,338
ROTARY ANODE PLATE FOR X-RAY TUBES
Adolf Friedrich Elsas, Erlangen, Germany, assignor to Siemens Aktiengesellschaft, Erlangen, Germany, a corporation of Germany
Filed Feb. 25, 1965, Ser. No. 435,178
3 Claims. (Cl. 313—330)

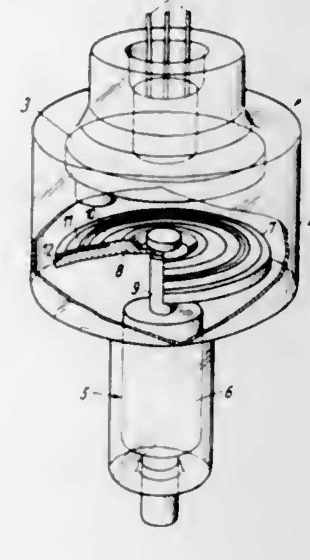

A rotary anode plate for X-ray tubes in which at least the electron impact surface is formed of a high melting alloy which consists of tungsten, osmium, and another high melting metal, such as rhenium.

3,397,339
BAND EDGE OSCILLATION SUPPRESSION TECHNIQUES FOR HIGH FREQUENCY ELECTRON DISCHARGE DEVICES INCORPORATING SLOW WAVE CIRCUITS
William L. Beaver, Los Altos Hills, and Thomas R. Mullen, Sunnyvale, Calif., assignors to Varian Associates, Palo Alto, Calif., a corporation of California
Filed Apr. 30, 1965, Ser. No. 452,279
15 Claims. (Cl. 315—3.5)

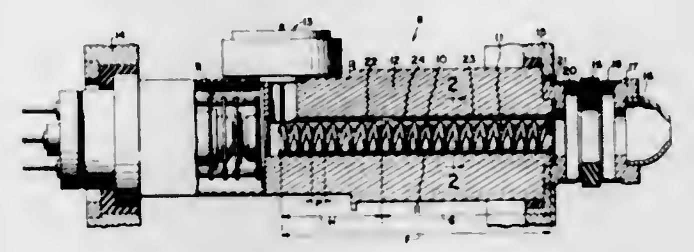

Band edge oscillations in a helical slow wave circuit may be suppressed by constructing the waveguide surrounding the helix in a manner such that the distance from the helix to the waveguide varies in an axial direction. For this purpose, the inside diameter of the waveguide may be tapered axially, or axial grooves may be cut in the interior of the waveguide, or metallic strips may be fastened to the interior wall of the waveguide. Each of these techniques causes the band edge frequencies of different portions of the helix to be nonidentical, substantially eliminating band edge oscillation. Alternatively, lossy attenuator strips may be distributed in the space between the helix and the waveguide in order to attenuate the magnetic fields which cause the oscillations.

3,397,340
VERTICAL CONVERGENCE TILT CIRCUITRY
Charles B. Neal and Lawrence R. Poel, Batavia, N.Y., assignors to Sylvania Electric Products Inc., a corporation of Delaware
Filed May 10, 1966, Ser. No. 548,950
5 Claims. (Cl. 315—13)

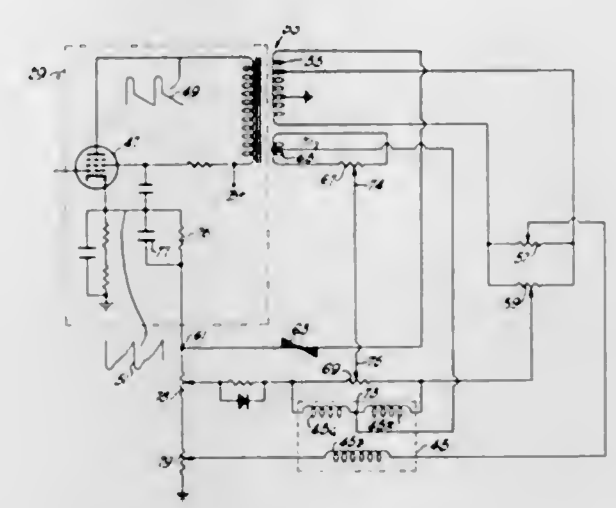

A multi-gun color television convergence circuit comprising a source of a first and second output potential containing both a sawtooth and a pulse portion; a voltage dependent resistor which eliminates the sawtooth portion of the second output potential; and an adder for adding the remaining pulse portion of the second output potential with the first output potential in order to produce a combined sawtooth potential. The combined sawtooth potential and the first output potential are both applied to each vertical convergence winding of the receiver in order to produce vertical convergence.

3,397,341
BIAXIAL ELECTROSTATIC DEFLECTOR
Lucien F. Guyot, Paris, and Gérard F. Peres, Villepreux, France, assignors to Compagnie Francaise Thomson Houston-Hotchkiss Brandt, Paris, France, a corporation of France
Filed Apr. 11, 1966, Ser. No. 541,675
Claims priority, application France, Apr. 20, 1965, 13,771
14 Claims. (Cl. 315—17)

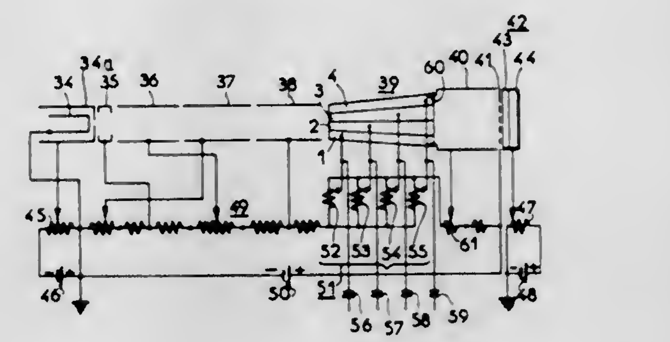

Improved biaxial electrostatic deflection device including two pairs of opposed main deflection plates and a compensating electrode. The compensating electrode has portions circumferentially interspersed with the main plates at the beam-exit end of the device. Deflection potentials are connected to the main deflection plates serving to deflect an electron beam in mutually orthogonal directions and a common potential is connected to the compensating electrode to create correcting fields imparting corrective deflections to the particles whereby the resulting overall deflections will simulate the vector sums of the deflections produced by said main plates in said respective orthogonal directions.

3,397,342
AUXILIARY CIRCUIT EMPLOYING A DIODE TO ENSURE THE ENERGIZATION OF THE LOW BEAM LAMPS WHENEVER THE MOTOR IS OPERATING
Charles L. Dill, Jr., Miami, Fla., assignor to Edward M. Long, Miami, Fla.
Filed May 17, 1966, Ser. No. 550,783
2 Claims. (Cl. 315—79)

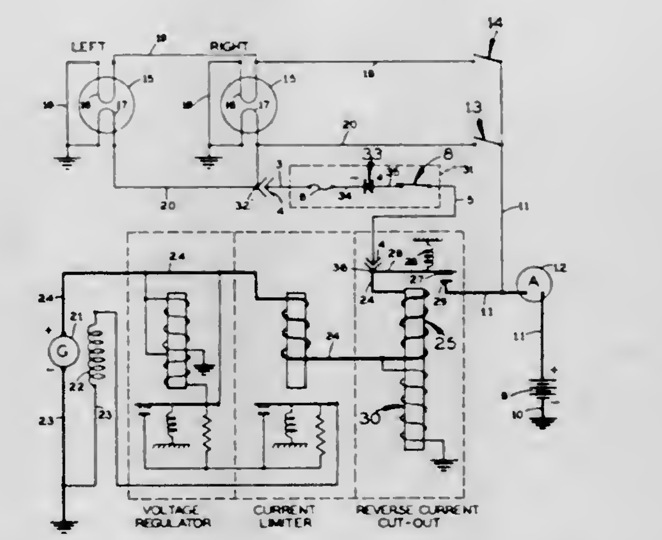

An automatic circuit for insuring the energizing of the low beam light whenever the motor is in operation. A diode connects the generator directly to the low beam lamps and allows the current to flow only from the generator to the lamps. This circuit parallels the regulator cutout contacts and the regular light switches.

3,397,343
PLURAL LAMP STARTING CIRCUIT UTILIZING HIGH IMPEDANCE AND GLOW DISCHARGE SWITCH TO CAUSE THE LAMPS TO ACT AS BALLASTS
Shungo Furui, Yokohama, Japan, assignor of twenty-five percent to Yasuka Akamatsu, Sacramento, Calif.
Filed Mar. 6, 1967, Ser. No. 621,737
4 Claims. (Cl. 315—189)

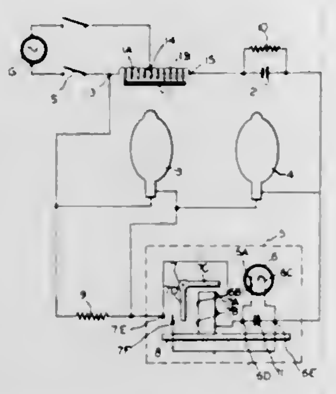

This invention relates to a circuit for starting two or more gaseous discharge lamps which are connected in series to a voltage source, comprising impedance means connected in parallel to one of said lamps, and switch means connected in series with said impedance means and in parallel with another of said lamps and operable to initially short circuit said other lamp thereby to start said one lamp and to subsequently remove said short circuit to cause said other lamp to start.

3,397,344
LIGHTING CONTROL APPARATUS
Stephen J. Skirpan, New York, N.Y., assignor to Skirpan Electronics, Inc., Long Island City, N.Y., a corporation of New York
Filed Oct. 7, 1965, Ser. No. 493,793
9 Claims. (Cl. 315—194)

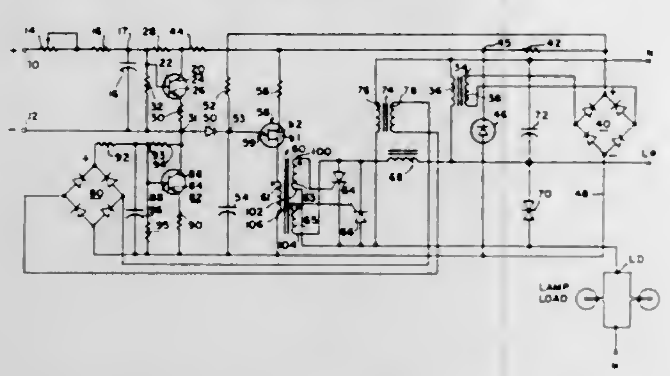

1. Apparatus for variably controlling the current from an AC source supplied to an incandescent lamp load comprising a pair of terminals for connecting said apparatus to said source, a pair of gate controlled rectifiers, each of said gate controlled rectifiers respectively comprising anode, cathode, and gate electrodes, connected in their anode to cathode paths in inverse parallel relationship across said terminals, a unijunction transistor relaxation oscillator comprising a transistor having emitter and first and second base electrodes, said emitter being adapted to be connected to a variable unidirectional control signal source, means for deriving a unidirectional voltage from said AC source and applying said last named signal as an operating biasing potential to said transistor, means for applying said control signal to said emitter to produce a pulse train output from said transistor in which each of the pulses comprising said train respectively occur during discrete half cycles of said AC source output, the times of occurrence of said pulses within said half cycles being determined by the magnitude of said control signal, means for applying said pulses to said gate electrodes to render said rectifiers alternately conductive in successively occurring half cycles substantially simultaneously with the occurrence of said pulses, means for applying the outputs of said gate controlled rectifiers to said load and means connected across said load for deriving a unidirectional signal and negatively feeding back said last named signal to said emitter to provide an AC voltage applied to said load which varies with said control signal to produce a luminescence in said load whose apparent intensity varies linearly with the magnitude of said control signal.

3,397,345
ELECTRODE ASSEMBLY FOR FLUID TRANSFER DEVICE
Robert J. Dunlavey, Palatine, Ill., assignor to Teletype Corporation, Skokie, Ill., a corporation of Delaware
Filed Dec. 2, 1965, Ser. No. 511,084
2 Claims. (Cl. 317—3)

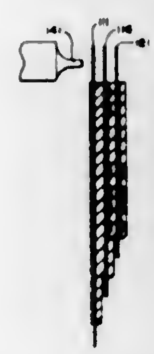

An electrode structure is formed by etching a plurality of plates of the electrode material to form the desired electrode shapes but with the electrodes still connected to the outer edges of the plates to form a temporary support; making electrical strapping connections between selected electrodes; stacking the plates; potting with epoxy the portions of the electrodes which are to be unexposed; and severing the electrodes from the temporary support. The completed structure results in electrodes arranged in planes perpendicular to the quiescent path of charged ink particles passing through the gaps in the electrodes.

3,397,346
METER BOX AND LINER
Clifford E. Sloop, 2230 10th St., Columbus, Ga. 31906
Filed Sept. 8, 1965, Ser. No. 485,844
17 Claims. (Cl. 317—104)

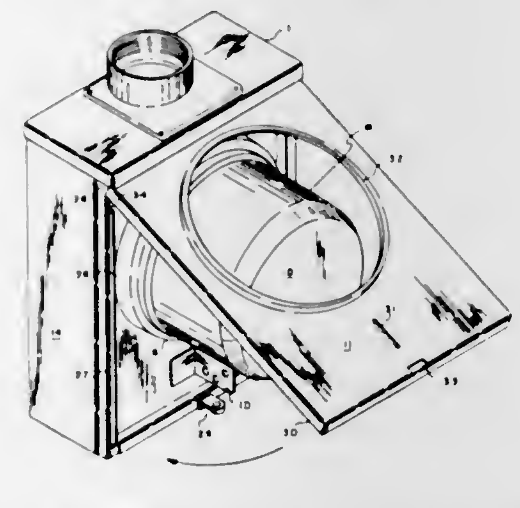

A meter box for electricity meters having a removable liner to cover the opening of the box. The liner defines a central opening for receiving the electrical connections of a meter but is of a size to engage the base of the meter, thus functioning to guide the meter into proper alignment with the sockets of the meter box, and weather proofing the meter box.

3,397,347
MAGNETIC DISPLACEMENT TRANSDUCER
Raymond W. Hoeppel, P.O. Box 5, Oak View, Calif. 93022
Continuation-in-part of application Ser. No. 219,602, Aug. 27, 1962. This application May 16, 1966, Ser. No. 550,370
11 Claims. (Cl. 317—123)

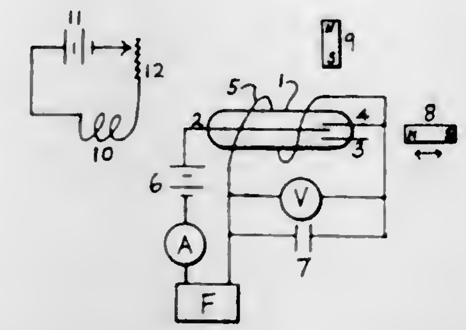

A displacement transducer for measuring movement of a nearby member comprises a magnetically biased vibrating reed relay having a capacitor to retard its vibration rate and ferromagnetic material attached to the moving member that alters the magnetic bias flux at the relay. The degree of movement is indicated by a transducer that is switched by the vibrating contacts of the relay, the vibration rate varying with the movement of the member.

3,397,348
PROXIMITY CURRENT DETECTOR
Raymond W. Hoeppel, P.O. Box 5, Oak View, Calif. 93022
Continuation-in-part of application Ser. No. 219,602, Aug. 27, 1962. This application May 16, 1966, Ser. No. 550,371
6 Claims. (Cl. 317—123)

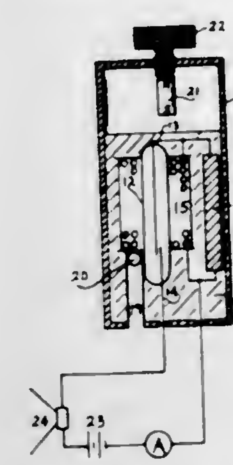

An instrument for detecting and measuring current flowing through a nearby wire comprises a magnetically biased vibrating reed relay having a capacitor to retard its rate of vibration. The current flow is detected or measured by a transducer that is switched by the vibrating contacts of the relay, the vibration rate varying with the amount of current flowing through the wire.

3,397,349
HIGH VOLTAGE SEMICONDUCTOR RECTIFIER WITH A SLOPING SURFACE ACROSS BARRIER EDGE
Oscar Mellville Clark, Scottsdale, Ariz., assignor to Motorola, Inc., Franklin Park, Ill., a corporation of Illinois
Original application Feb. 17, 1961, Ser. No. 90,026. Divided and this application Dec. 22, 1964, Ser. No. 420,409
16 Claims. (Cl. 317—234)

A semiconductor rectifier has a sloping surface around the edge in which the pn-junction terminates. The magnitude of the slope decreases continually in the direction

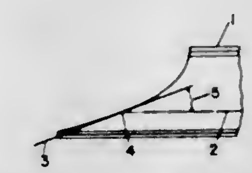

away from the region with the smaller diameter and this region has a higher resistivity than the other.

3,397,350
CIRCUIT CONTROL RELAY UTILIZING CAPACITOR AND SCR MEANS
Ruben Garzon, Los Angeles, Calif., assignor to I-T-E Circuit Breaker Company, Philadelphia, Pa., a corporation of Pennsylvania
Filed Dec. 15, 1965, Ser. No. 513,970
1 Claim. (Cl. 317—142)

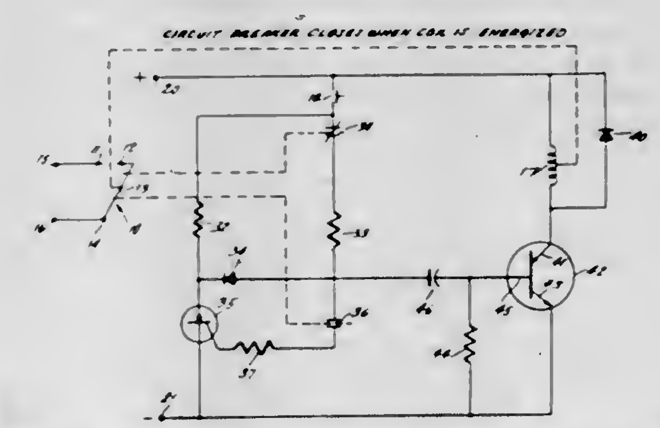

A control circuit for performing the function of X and Y relays for controlling the closing operation of a circuit breaker with a capacitor charging control arrangement for preventing pumping of the circuit breaker contacts.

3,397,351
ELECTRIC MOTORS INCLUDING A ROTOR FED FROM AN EXTERNAL COMMUTATION SYSTEM
Eric Wolfendale, Bracknell, England, assignor to Racal Communications Limited, Bracknell, England, a British company
Filed Nov. 8, 1965, Ser. No. 506,765
Claims priority, application Great Britain, Nov. 10, 1964, 45,773/64
12 Claims. (Cl. 318—138)

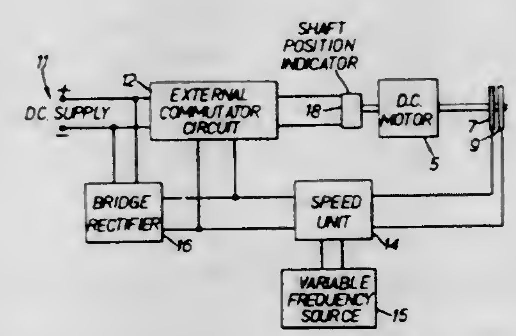

1. A D.C. motor control system comprising
a D.C. motor having a stator winding and an armature rotor winding,
a pair of continuous non-segmented slip rings rotating with the armature winding,
means connecting the armature winding to the said slip rings,
an electric power supply source,

an external commutator circuit having input and output terminals and connections therebetween,

reversing means in said external commutator circuit for reversing the connections between the input and output terminals thereof,

means connecting the input terminals of the external commutator circuit to the electric power supply source,

means connecting the output terminals of the external commutator circuit to the slip rings to supply current to the armature winding through the slip rings,

position-responsive means including means driven by rotation of said armature winding and producing radiation signals according to the instantaneous position of the armature winding with respect to the stator winding and means responsive to said radiation signals to produce corresponding control signals,

and means interconnecting the position-responsive means and the external commutator circuit whereby each said control signal actuates the said reversing means in the external commutator circuit to reverse the connections between the said input and output terminals thereof,

the position-responsive means being arranged so that the said control signals occur at such instants that the external commutator circuit maintains the armature winding continuously correctly polarised with respect to the stator winding.

3,397,352
FAN SPEED CONTROL MEANS EMPLOYING A VIBRATING CONTACT
Gary F. Woodward, Ann Arbor, Mich., assignor to American Standard Inc., a corporation of Delaware
Filed Mar. 19, 1965, Ser. No. 441,085
8 Claims. (Cl. 318—346)

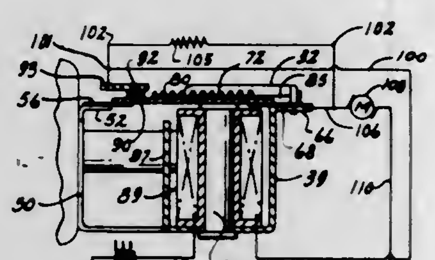

A set of electrical contacts operably arranged to feed current to a fan motor, one of said contacts being located on a vibratory leaf whose amplitude of vibration is varied by condition-responsive power means. The amplitude variation is effective to vary the duration of each contact-closed period relative to the duration of each contact-open period. Varying the relative durations of these two periods can effectively vary the resistance across the contacts to thus vary the fan motor voltage and motor speed.

3,397,353
MODULATORS USING FIELD-EFFECT TRANSISTORS
James J. Hitt, Willow Grove, and Gerald Mosley, Melrose Park, Pa., assignors to Leeds & Northrup Company, Philadelphia, Pa., a corporation of Pennsylvania
Filed Mar. 31, 1966, Ser. No. 539,038
9 Claims. (Cl. 321—44)

Full-wave and half-wave modulator circuits of series-connected and shunt-connected types using field-effect transistors with balanced amplifier-coupling networks of RC and transformer types. In all of the modulator circuits disclosed, the means for minimizing transfer to the amplifier of switching transients includes an external capacitor connected between the gate of the field-effect transistor and one of its channel electrodes for balancing of the internal feed-through capacitances. In the shunt-connected modulator circuitry, the impedance of the signal source as seen by one-half of the balanced amplifier-coupling network is balanced by an impedance of like

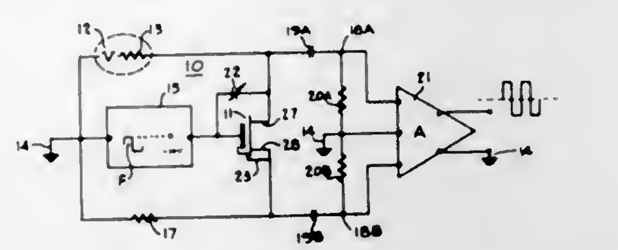

value as seen by the other half of the amplifier-coupling network: In the series-connected modulator circuitry, the impedance as respectively seen by the halves of the amplifier-coupling network may, in one circuit configuration, be balanced in similar manner or, in another circuit configuration, by shunting the signal source by capacitance of low impedance at the operating frequency.

3,397,354
MAGNETIC AMPLIFIER CONTROL SYSTEM WITH RESET CIRCUIT
Franklin O. Wisman, South Bend, Ind., assignor to The Reliance Electric and Engineering Company, a corporation of Ohio
Filed Sept. 29, 1965, Ser. No. 491,341
9 Claims. (Cl. 323—22)

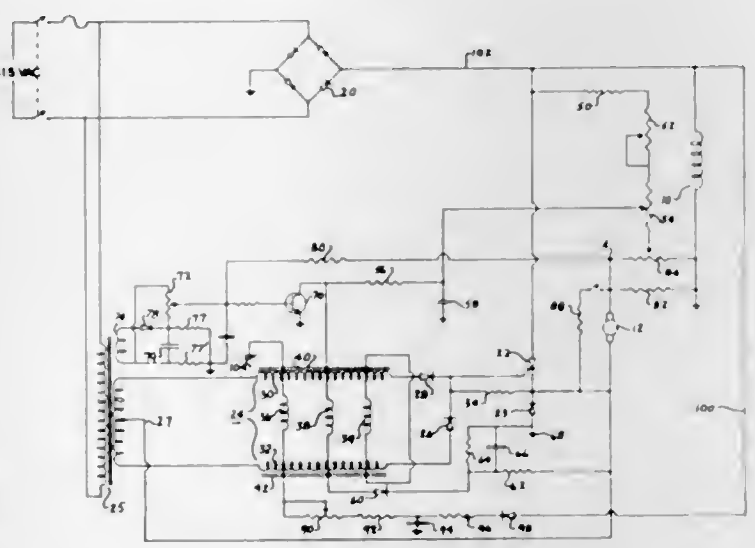

A motor control system having a silicon controlled rectifier and a magnetic amplifier, in which a circuitry is used to reset the magnetic amplifier to its original operating state so that the control will not cause an excessive initial load on the motor or driven equipment when the control is reenergized. The reset circuitry includes a winding in the magnetic amplifier in addition to the control winding for performing the resetting operation.

3,397,355
TAP CHANGING TRANSFORMER POWER SUPPLY SYSTEM
Karl F. Frank, Mineola, N.Y., assignor to Schenck Manufacturing Corporation, Farmingdale, N.Y.
Filed Mar. 10, 1966, Ser. No. 533,524
4 Claims. (Cl. 323—43.5)

The present invention provides transformer relay means which are installed for instance in a 120 volt appliance so that it may be plugged into 120 volts or 240 volts without any further internal connections.

The principle employed is making use of the transformer core magnetic leakage flux pulling an armature of a relay when the higher of the two voltages is con-

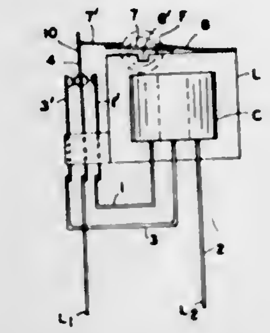

nected to the low voltage winding of the transformer. The relay contacts will then transfer the higher operating voltages to the transformer winding tap of its designed operating voltage.

3,397,356
METHODS OF INVESTIGATING SUBSURFACE EARTH FORMATIONS BY COMBINING THE ELECTRICAL RESISTIVITIES AT DIFFERENT LATERAL DEPTHS WITHIN THE FORMATIONS
Jean L. Dumanoir, New York, N.Y., assignor to Schlumberger Technology Corporation, Houston, Tex., a corporation of Texas
Filed May 27, 1966, Ser. No. 553,450
4 Claims. (Cl. 324—1)

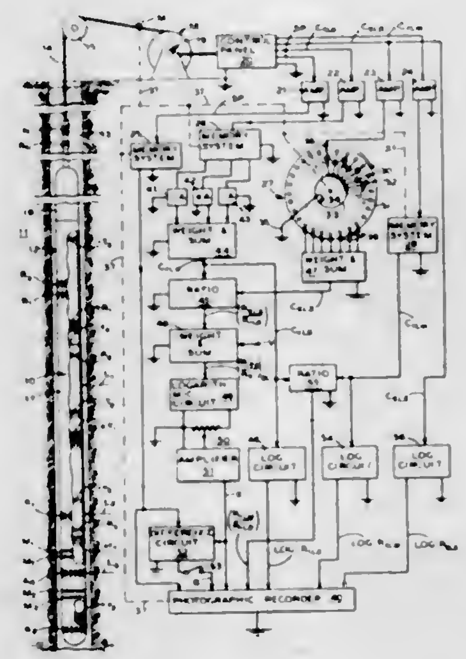

One embodiment of the invention indicates the presence and relative movability of hydrocarbons within an earth formation. The spontaneous potential ("SP") is contrasted with a value X that is determined through the equation:

$$X = -K \log \left(\frac{R_{xo}}{R_t}\right)_{QL}$$

Differences, Δ, between X and SP identify a production horizon and provide an indication of potential hydrocarbon production. The reliability of these data is verified by the ratio:

$$R_{ILM}/R_{ILD}$$

which, if more than about 1.15, indicates that filtrate invasion is deep and that the foregoing analysis is trustworthy.

3,397,357
INDUCTIVE DEVICE FOR CENTERING A PUNCH WITHIN ITS DIE
Edward R. Metzker, Oregon, and Sam J. Green, Temperance, Mich., assignors to Champion Spark Plug Company, Toledo, Ohio, a corporation of Delaware
Continuation of application Ser. No. 380,563, July 6, 1964. This application Oct. 2, 1967, Ser. No. 672,400
1 Claim. (Cl. 324—34)

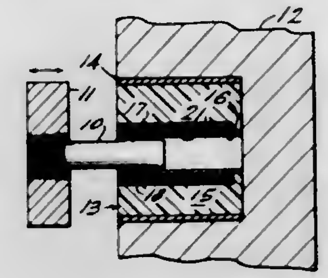

A punch centering device for indicating when a punch is aligned with its die. The device includes an annular housing adapted to fit into the die cavity and having a central passage which will receive the punch. The housing contains two balanced inductors spaced equidistant from and on opposite sides of the desired path for the punch and connected to two legs of a balanced bridge circuit. When the punch is off-center, the impedences of the two inductors are unequal and the bridge circuit is unbalanced. The unbalanced bridge circuit is electrically detected and indicated. Two pairs of opposed inductors can be mounted perpendicular to each other to indicate centering in two directions.

3,397,358
ROTATING COIL MAGNETOMETER WITH MEANS TO COMPENSATE FOR VARIATIONS IN ROTATIONAL SPEED
Dennis Allenden, Stretford, Manchester, and Terence Trevor Harrison, Poynton, England, assignors to Associated Electrical Industries Limited, London, England, a British company
Filed Apr. 22, 1965, Ser. No. 450,148
Claims priority, application Great Britain, Apr. 27, 1964, 17,312/64
7 Claims. (Cl. 324—47)

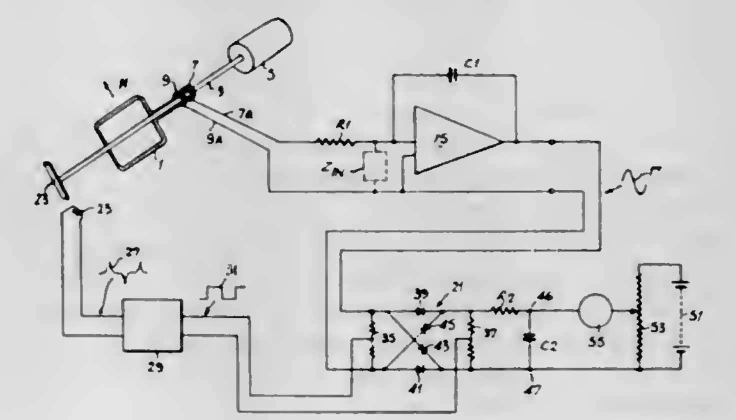

1. Circuit means for the purpose of providing a signal representative of the magnetic flux density in a magnetic field comprising

(a) an electrical pick-up coil arranged in the magnetic field;

(b) driving means by which the coil is continuously rotated in use at a substantially uniform speed;

(c) an amplifier to which the E.M.F. from the coil is applied as input and having capacitive negative feedback and arranged to yield an output with a gain which decreases inversely in magnitude with an increase in the frequency of the input to the amplifier;

(d) a synchronous detector to which the output from the amplifier is applied as input and which serves to block substantially all frequencies which are harmonics of the basic frequency of rotation of the coil; and

(e) output means arranged to receive the output from the synchronous detector and to provide the said signal representative of the magnitude of the magnetic field.

3,397,359
APPARATUS FOR MEASURING THE INPUT CHARACTERISTICS OF FOUR-TERMINAL NETWORKS INCLUDING A PROGRAMMING MEANS
Lothar Rohde, Munich, Germany, assignor to Rohde & Schwarz Ohg., Munich, Germany
Filed Feb. 1, 1965, Ser. No. 429,370
Claims priority, application Germany, Feb. 5, 1964, R 37,127
11 Claims. (Cl. 324—57)

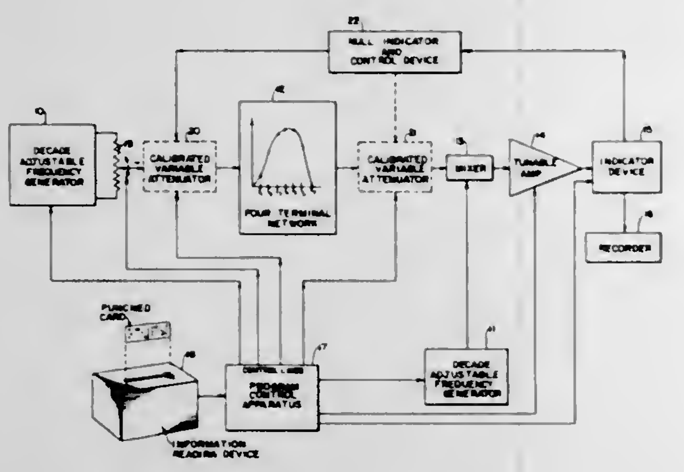

1. In combination with an apparatus for testing a four terminal network including a first and second decade tunable frequency generator for producing a first and second output frequency displaced with respect from one another by a predetermined fixed difference frequency, said first frequency being fed into the network under test, a frequency converter connected to the output of the network and the second generator for producing a difference frequency from the difference between the second frequency and the output frequency of the network, an amplifier connected to the converter and selectively tuned to the difference frequency to amplify the difference frequency, and an indicating device connected to the output of the amplifier to indicate the magnitude of the amplified signal, the improvement of which comprises: programming means for storing a predetermined program having a plurality of points indicative of the characteristics of the network, and a means connected to the generators for automatically adjusting the frequencies of the outputs of the first and second generators in response to said predetermined program.

3,397,360
RECEPTION SYSTEM USING CARRIER DETECTION FOR ANGULARLY MODULATED SIGNALS
Hisashi Kaneko and Akira Sawai, Tokyo, Japan, assignors to Nippon Electric Company Limited, Tokyo, Japan, a corporation of Japan
Filed Feb. 18, 1966, Ser. No. 528,473
1 Claim. (Cl. 325—45)

A receiver with a carrier detection facility for demodulating by means of an angle demodulator an incoming signal having an angularly modulated carrier which is switched on and off at the transmitter, the receiver also including means for detecting a carrier component of the incoming signal by a phase-locked circuit, so that the demodulated signal may be automatically switched on

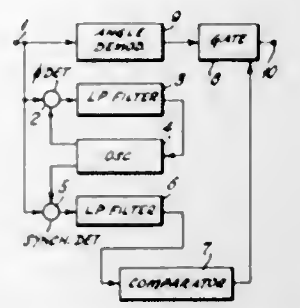

and off by the carrier-detected output, whereby the transmitted signal component may be reproduced in the receiver and suitable squelch provided during the "off" periods.

3,397,361
MAGNETIC AMPLIFIER UTILIZED AS A STATIC CONSTANT CURRENT REGULATOR
Joseph Ben Uri, Michael S. Erlicki, and David Schieber, Haifa, Israel, assignors to Technion Research and Development Foundation Ltd., Haifa, Israel, a corporation of Israel
Filed Jan. 7, 1965, Ser. No. 424,058
4 Claims. (Cl. 330—8)

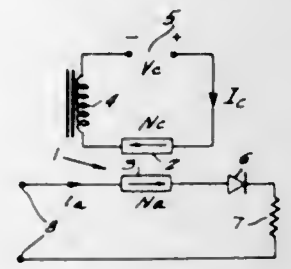

A constant current regulator in which a saturable magnetic core having a rectangular hysteresis characteristic is biased to negative saturation by a control current through a control winding with load current through a load winding opposing the ampere turns of the control winding. The load current flows to the load through a rectifier and saturates the core in a positive direction at the end of the load current cycle.

3,397,362
OPTICAL LASER CONFIGURATION
Lawrence P. Grayson, Baltimore, Md., and James H. Boyden, Pasadena, Calif., assignors to the United States of America as represented by the Secretary of the Army
Filed Oct. 18, 1966, Ser. No. 588,252
4 Claims. (Cl. 330—4.3)

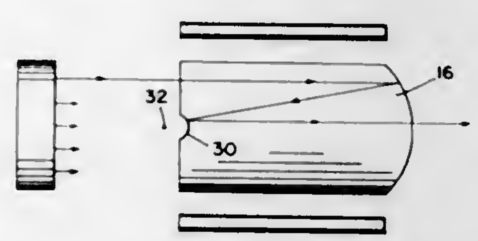

Laser amplifying crystal having at least a portion of each of its ends shaped as a paraboloid such that a coincident focal point exists, either within or outside the crystal. The paraboloids are made reflective to light rays impinging thereon and optically force the rays to make three passes through the crystal.

3,397,363
CONTROLLABLE SIMULATED INDUCTOR USING TETRODE TRANSISTORS
Fleming Dias, Chicago, Ill., assignor to Zenith Radio Corporation, Chicago, Ill., a corporation of Delaware
Filed Jan. 3, 1967, Ser. No. 607,003
6 Claims. (Cl. 331—8)

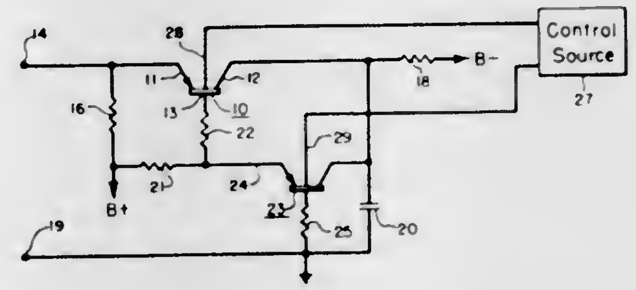

A simulated inductor circuit employing one or more transistors wherein the apparent inductance is substantially independent of the intrinsic internal impedance of the transistors. In a preferred embodiment the transistors are of the tetrode type having a second base electrode which alters their intrinsic internal impedance according to an applied control effect. Control effect developing means apply a control effect to the second base electrode to vary the apparent inductance as a function of some related variable and include temperature-dependent elements for obviating the effect of temperature variations.

The simulated inductor is used as a voltage controlled inductance as part of an oscillator resonant circuit in a phase control loop.

3,397,364
INDUCTIVE LOOP METALLIC OBJECT DETECTOR
Charles L. Crandall, Fountain, Colo., assignor, by mesne assignments, to Small Business Administration, an agency of the United States Government
Filed May 24, 1967, Ser. No. 640,927
4 Claims. (Cl. 331—65)

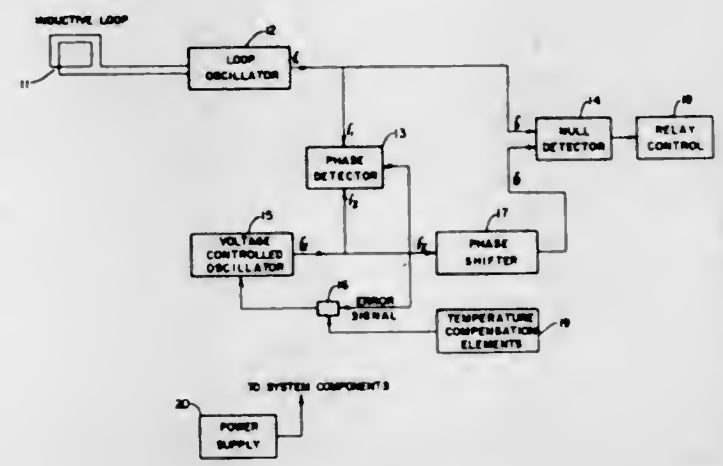

A detector of metallic objects through change of inductance in an oscillator whereby the oscillator signal is compared with a signal from a second oscillator locked 90° out of phase, whose signal is further shifted with both the additionally shifted signal and the first oscillator signals now 180° out of phase being compared in a null detector which in turn operates a relay control.

3,397,365
OSCILLATOR WITH SEPARATE VOLTAGE CONTROLS FOR NARROW AND WIDE RANGE TUNING
Frederick W. Kruse, Jr., Palo Alto, and Douglas L. Baskins, Cupertino, Calif., assignors to Kruse-Storke Electronics, Mountain View, Calif., a corporation of California
Filed May 22, 1967, Ser. No. 640,135
17 Claims. (Cl. 331—102)

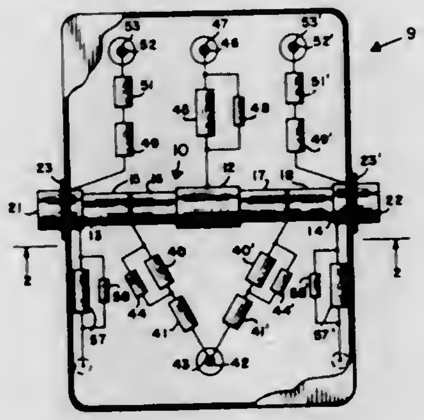

A voltage-tunable oscillator in which two pairs of variable-capacitance diodes, connected back-to-back, are symmetrically disposed in a transmission line. The transmission line is symmetrically located in a hollow rectangular transmission line structure to form a resonant circuit which is excited at the fundamental resonator frequency by a pair of transistor amplifiers driving the transmission line in push-pull relationship. The oscillation frequency is varied over a wide range by the application of a first tuning voltage to the junction between the two diodes of each pair of diodes; and the oscillation frequency is varied over a lesser range by the application of a second tuning voltage to the junction between the two pairs of diodes.

3,397,366
INVERTER STARTING CIRCUIT
John D. Bishop, Basking Ridge, N.J., assignor to Bell Telephone Laboratories, Incorporated, Berkeley Heights, N.J., a corporation of New York
Filed Mar. 29, 1967, Ser. No. 626,728
4 Claims. (Cl. 331—113)

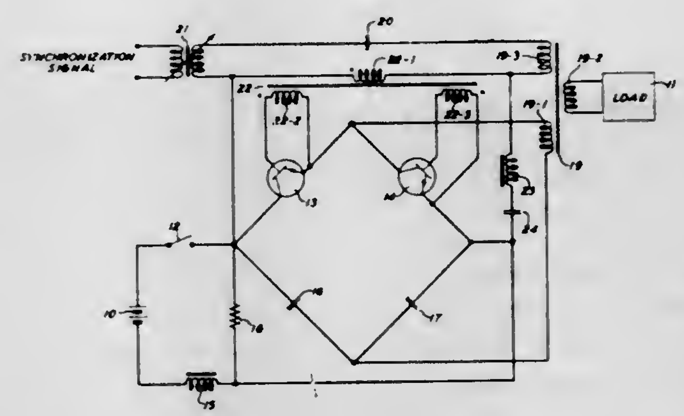

In a transistor inverter a series L-C network is connected between the D.C. input source and the primary winding of the emitter-base drive transformer for the switching transistors. When power is applied to the inverter a burst of damped sinusoidal current is generated by means of the L-C network. Either the positive or negative peak of the sinusoidal current overcomes the residual flux of the drive transformer to forward bias one of the switching transistors, thereby assuring the start of switching.

3,397,367
TEMPERATURE COMPENSATED CRYSTAL OSCILLATOR
Francis R. Steel, Northbrook, Ill., and George R. Gawell, Indian Harbour Beach., Fla., assignors to Motorola, Inc., Franklin Park, Ill., a corporation of Illinois
Filed Jan. 12, 1967, Ser. No. 608,864
7 Claims. (Cl. 331—116)

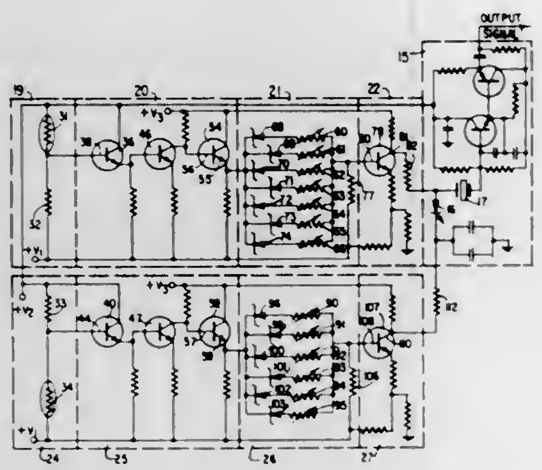

A temperature compensated crystal oscillator using a voltage variable reactance device coupled to the crystal to regulate the frequency of the oscillator in response to a control voltage. The control voltage is developed by a temperature sensing element and the curve of the control voltage is shaped by a non-linear network.

3,397,368
CONTROL CURRENT SENSITIVE MODULATORS
Walter Emil Wilhelm Jacob, Stuvsta, Sweden, assignor to Telefonaktiebolaget L M Ericsson, Stockholm, Sweden, a corporation of Sweden
Filed July 27, 1965, Ser. No. 475,145
Claims priority, application Sweden, Aug. 12, 1964, 9,730/64
7 Claims. (Cl. 332—43)

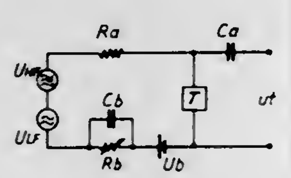

There is disclosed a family of circuits which can be used for modulators. Each circuit includes a threshold device of semi-conductor material whose resistance is switchable between high and low values in accordance with the magnitude of a direct and/or slowly varying control current passing therethrough. A high frequency signal is applied to the device as is the control current. As the control current is varied the high frequency signal is modulated.

3,397,369
HARMONIC GENERATOR AND FREQUENCY MULTIPLIER BIASING SYSTEM
Arthur Uhlir, Jr., Weston, Mass., assignor to Microwave Associates, Incorporated, Burlington, Mass., a corporation of Massachusetts
Filed Aug. 24, 1965, Ser. No. 482,148
14 Claims. (Cl. 332—52)

1. A frequency multiplier comprising an input circuit resonant at a fundamental frequency, an output circuit resonant at a harmonic of said fundamental frequency, a voltage-variable reactance diode connected between said input circuit and said output circuit to generate harmonics of said fundamental frequency, and means to bias said reactance diode as a function of signal amplitude comprising: a voltage-variable resistance diode,

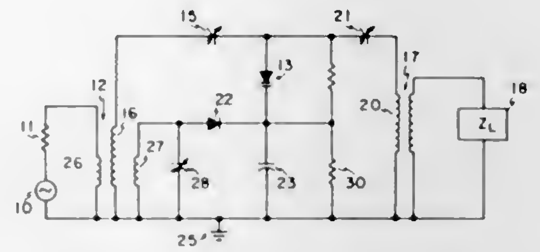

means to couple at least one of said input circuit and said output circuit to said resistance diode independently of said reactance diode and means to connect said resistance diode to said reactance diode whereby a DC bias voltage is applied to said reactance diode.

3,397,370
DELAY LINE HAVING A THERMOELECTRIC GENERATOR RESPONSIVE TO RATE OF HEAT TRANSFER
Jean-Pierre Biet, Saulx-les-Chartreux, and Charles Dufour, Paris, France, assignors to Compagnie Generale d'Electricite, Paris, France, a corporation of France
Filed Oct. 22, 1965, Ser. No. 502,075
Claims priority, application France, Dec. 3, 1964, 997,279
18 Claims. (Cl. 333—29)

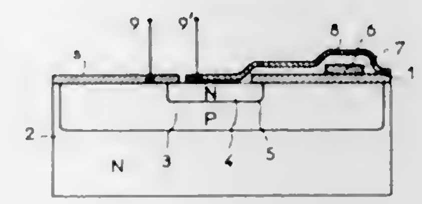

1. A thermal delay device providing a thermoelectric effect comprising:
thermoelectric generator means for providing an electrical signal in response to a temperature differential,
heating resistance means for generating heat in response to application of an electrical control signal,
a first thermal path of low thermal capacitance connecting said heating resistance means to one side of said thermoelectric generator means, and
a second thermal path of higher thermal capacitance than said first thermal path connecting said heating resistance means to another side of said thermoelectric generator means.

3,397,371
ELECTROMAGNETIC RELAYS
Bernard Sydney Barnaby, Ware, Peter William Ward, Hatch End, and Peter H. Morcombe, Newton Aycliffe, England, assignors to The General Electric Company Limited, London, England, a British company
Filed Aug. 10, 1966, Ser. No. 571,551
Claims priority, application Great Britain, Aug. 12, 1965, 34,583/65
12 Claims. (Cl. 335—112)

An electromagnetic relay has two operated positions on either side of a normal stable position, the armature being mounted on the center limb of an E-shaped core so as to rock towards one or the other outer limb selectively. The contact units and the remainder of the relay are sep-

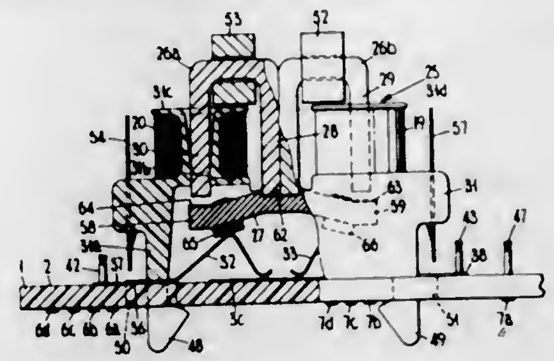

arately mounted on a printed circuit board the conductors of which constitute one contact of each contact unit.

3,397,372
PROXIMITY-MAGNETIC MEANS FOR OPERATING MICROSWITCHES
Palmer M. Maxwell, 212 E. Liberty St., Savannah, Ga. 31401
Original application Nov. 8, 1965, Ser. No. 506,680, now Patent No. 3,325,756, dated June 13, 1967. Divided and this application June 13, 1967, Ser. No. 645,790
14 Claims. (Cl. 335—205)

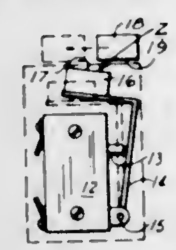

An actuating mechanism for a microswitch wherein the microswitch and the lever to activate it are in a hermetically sealed enclosure. The lever has a permanent magnet on the end thereof and is moved by a second permanent magnet outside the enclosure. Two microswitches may be within the housing with one or two levers.

3,397,373
FIRE WARNING CABLE
Lyndon Reginald Spicer, Cascades, Llandevaud, Wales, assignor to International Standard Electric Corporation, New York, N.Y., a corporation of Delaware
Filed Dec. 28, 1966, Ser. No. 605,396
Claims priority, application Great Britain, Dec. 31, 1965, 55,347/65
8 Claims. (Cl. 337—412)

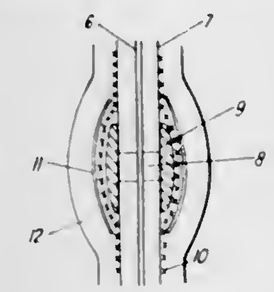

A cable for a fire warning system in which a pair of conductors are covered by insulation having gaps to expose the conductors. Low melting point slugs of conductive material overlie the gaps and are encased in an elastic sleeve which when the slugs are melted force them into the gaps to form a conductive path between the conductors.

3,397,374
TWO-PIECE POTENTIOMETER
Mogens W. Bang, Ridgway, Pa., assignor to Stackpole Carbon Company, St. Marys, Pa., a corporation of Pennsylvania
Filed July 6, 1967, Ser. No. 651,468
8 Claims. (Cl. 338—162)

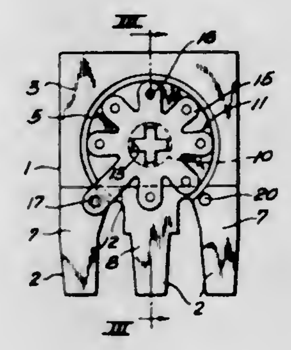

A substrate supports an electrical resistance element having a curved body with a circular inner edge and laterally spaced ends, to which electric terminals are connected. The substrate also supports conductive material in the area between a central opening through the substrate and the space between the ends of the resistance element. This material likewise is connected with a terminal. Mounted in the opening is a metal rotor disposed in constant engagement with the adjoining conductive material and carrying an electric contact engaging the resistance element.

3,397,375
HEATING ELEMENT
Richard L. Casper, Grand Island, and Frank J. Baumeister, Lockport, N.Y., assignors to The Carborundum Company, Niagara Falls, N.Y., a corporation of Delaware
Filed Dec. 1, 1966, Ser. No. 598,455
7 Claims. (Cl. 338—330)

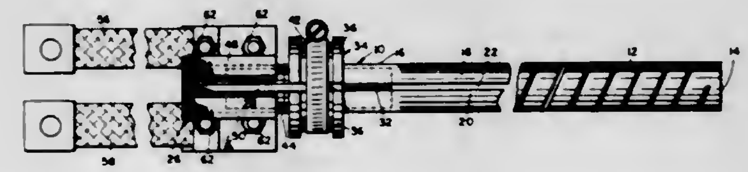

An electric heating element comprising a tubular resistance body having a hot zone section and a cold end terminal section engageable with an electrical contact. A ceramic bulk fiber filler is disposed within a controlled portion of the cold end terminal section to impede the flow of radiative heat toward the electrical contact area.

3,397,376
FLUORESCENT LAMPHOLDER WITH MOUNTING CLIP
Andrew J. Gombar, South Norwalk, Conn., assignor to Kulka Electric Corporation, Mount Vernon, N.Y., a corporation of New York
Filed May 24, 1966, Ser. No. 552,476
8 Claims. (Cl. 339—56)

A lampholder assembly comprising a pair of lampholders for supporting a double-ended fluorescent lamp therebetween and connecting said lamp to a source of potential, wherein each lampholder is mounted for limited tilting movement on a support plate. A spring clip is mounted on each lampholder and has a leg extending along the base of the lampholder and projecting there-

from into engagement with the support plate for urging the lampholders toward each other so as to apply com-

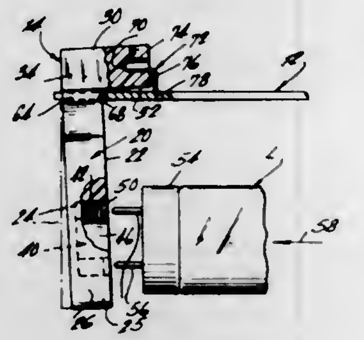

pressioned force upon the lamp mounted between the lampholders.

3,397,377
DETACHABLE WATERPROOF CONNECTOR
Rossiter Raymond Potter, Harrisburg, Pa., assignor to AMP Incorporated, Harrisburg, Pa.
Filed Oct. 6, 1965, Ser. No. 493,400
6 Claims. (Cl. 339—60)

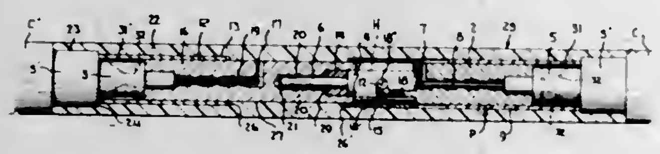

A detachable electrical connector is provided for primary use in underwater applications. The connector is waterproof and has an external diameter which is consistent with the external diameter of the cables being connected. Further, the connector has a resilient outer cover which permits of some flexibility whereby the connector will not interfere with coiling of the cables for storage.

3,397,378
FLUID-PROOF JUNCTION BOX
Oran R. Dietrich, Encinitas, Calif., assignor, by mesne assignments, to Electro Oceanics, Inc., a corporation of California
Filed Dec. 8, 1965, Ser. No. 512,340
3 Claims. (Cl. 339—60)

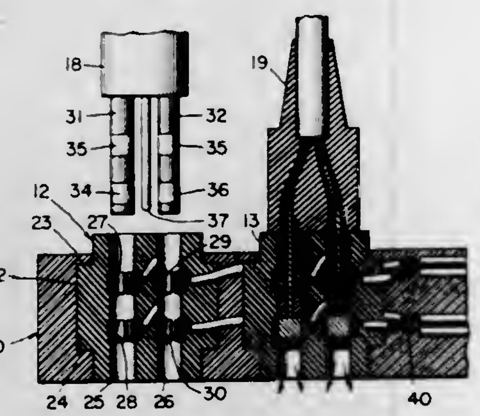

A fluid-proof junction box for connecting underwater cables is provided in the form of several socket bodies of insulating material having elongated sockets passing therethrough imbedded as by molding within a plastic body holding the various sockets in fixed relationship to each other. A cable extends into the plastic material to connect to specific contacts on the interior walls of each of the elongated sockets. Connections are effected by inserting elongated plugs of corresponding dimensions to the sockets through one open end of the socket thereby urging water within the socket out the other open end and effecting a wiping action so that engagement of a plug contact on the exterior surface of the plug intermediate its ends with the internal socket contact is effected and the connection maintained in a clean and dry condition even though the connection is effected under water.

3,397,379
LAMP SOCKET WITH INSULATION PIERCING CONTACTS
Juan Coma Puig, Carretera de Caldas 118, Granollers, Barcelona, Spain
Filed July 5, 1966, Ser. No. 562,609
Claims priority, application Spain, Oct. 20, 1965, 319,034
6 Claims. (Cl. 339—99)

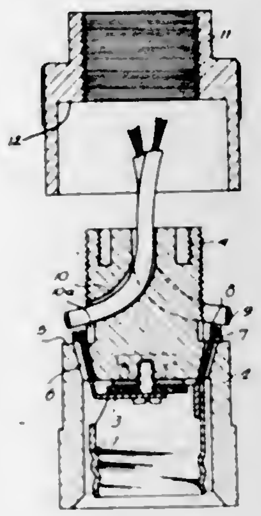

A lamp socket having structure for making electrical connections between inner contacts and outer conductors. The socket has a housing having a lamp-receiving interior where the contacts are located, and these contacts are connected with electrically conductive piercing members which extend through and beyond a transverse housing wall, these piercing members terminating outwardly beyond the housing wall in a pair of toothed free ends. A projection extending from the transverse housing wall is formed with passages through which conductors extend across the toothed ends of the piercing members, and a pressing structure is carried by the projection and presses the conductors across and against the toothed free ends of the piercing members so that the latter will pierce through insulation of the conductors and form electrical connections therewith.

3,397,380
ELECTRIC PLUG WITH INSULATION PIERCING CONTACTS
Juan Coma Puig, Carretera de Caldas 118, Granollers, Barcelona, Spain
Filed July 5, 1966, Ser. No. 562,610
Claims priority, application Spain, Sept. 27, 1965, 318,221
4 Claims. (Cl. 339—99)

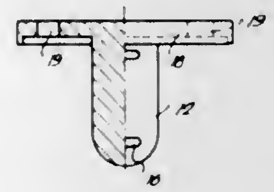

An electric plug capable of making electrical connections between contacts of the plug and conductors to which the plug is connected. The plug contacts are car-

ried by a plug housing and are engaged by electrically conductive blades extending into the housing and defining between themselves a space which is adapted to receive a spreader means which spreads the blades apart from each other toward a pair of conductors, respectively, which also extend into the housing. The blades carry tooth members which pierce through the insulation of the conductors and a spring means in one embodiment urges the conductors respectively toward the blades and in another embodiment urges the blades toward the conductors.

3,397,381
PRINTED CIRCUIT EDGE CONNECTOR
Hermanus Petrus Johannes Gilissen, Vlijmen, North Brabant, Netherlands, assignor to AMP Incorporated, Harrisburg, Pa.
Filed June 30, 1966, Ser. No. 561,942
Claims priority, application Netherlands, July 5, 1965, 6508627
6 Claims. (Cl. 339—176)

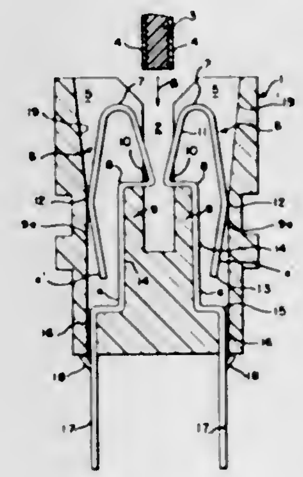

An electrical connector comprises a dielectric housing having a channel and a pocket in communication with the channel so that a spring contact section of an electrical contact in the pocket extends within the channel and the electrical contact has a leg portion provided with a bowed area that resiliently and slidably engages a wall of the pocket to permit the spring contact section to remain substantially constant and to be substantially independent from the deflection of a bight of the spring contact section while the spring contact section is under electrical-engaging tension.

3,397,382
ELECTRICAL TERMINATION
John K. Shannon, Kenosha, Wis., assignor to Quick Cable Corporation, Racine, Wis., a corporation of Wisconsin
Filed July 13, 1967, Ser. No. 653,211
5 Claims. (Cl. 339—230)

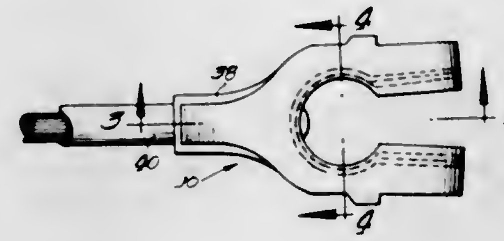

A plastic coated electrical terminal which has an insert which is preferably of steel, brass, lead or other material having similar electrical and mechanical strength imbedded in it. The insert can be, for example, a reinforcement ring or a generally flat, elongated connector strip having a tube affixed to it for receiving therein the end of an electrical conductor. The conductor can be secured therein using a compression nut, in which case, the tube is threaded internally. Alternatively, the conductor can be secured within the tube, by means of a threaded fastener such as a screw extended into ends of the conductor, or by casting the insert of lead, directly to the conductor. Only the portion of the insert which is in electrical contact with the object such as a battery post is exposed, and that portion is exposed in a manner such that it is sealed when the terminal is affixed to the object.

3,397,383
ELECTRICAL CONNECTOR
John S. Prifogle, Williamsburg, and Richard C. Vail, Richmond, Ind., assignors to Belden Corporation, a corporation of Illinois
Filed Apr. 11, 1966, Ser. No. 541,771
4 Claims. (Cl. 339—252)

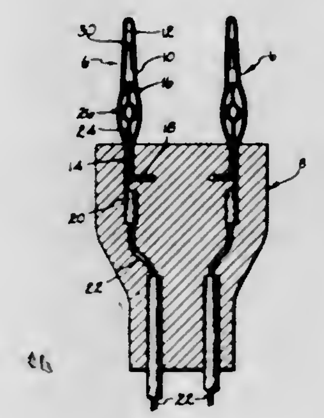

A spring blade is provided which extends from and is supported in a plug body. The spring blade comprises a flat metal strip which is folded upon itself to provide an outer contact portion, a shank portion and an intermediate contact portion connecting the outer contact portion with the shank portion, the outer contact portion includes first coextensive substantially parallel adjacent sections of the strip, the intermediate contact portion includes second coextensive sections of the strip. These second coextensive sections are bowed outwardly from each other to provide compressional resiliency for the intermediate contact portion. The spring blade also includes a stiffener strip extending between the second coextensive sections and between the first coextensive sections for imparting lateral and torsional rigidity to the spring blade. The spring blade further comprises means supported either by the stiffener portion between the second coextensive sections or by the second coextensive sections for limiting inward movement of the second coextensive sections so that permanent deformation does not occur when the second coextensive sections are urged toward each other.

3,397,384
ARRANGEMENT FOR ELECTRICAL TERMINALS
Roland B. Lawrence, Falls Church, Va., assignor to The Deutsch Company Electronic Components Div., Banning, Calif., a corporation of California
Filed Nov. 17, 1965, Ser. No. 508,198
19 Claims. (Cl. 339—258)

An electrical connecting device in which a contact has a portion to be received within an opening in a mating electrically conductive member, including means for positioning the contact in which a retainer has resilient tabs for holding the contact against axial movement, and means

outside the opening in the mating part for biasing the contact laterally to one side for providing firm contact

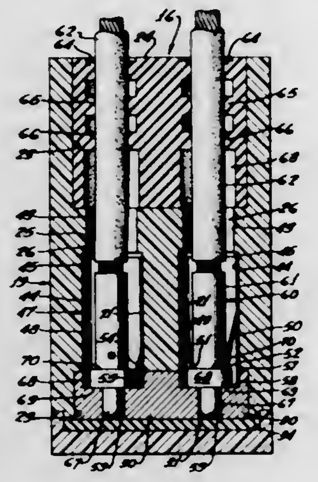

between the projecting portion of the contact and the electrically conductive member.

3,397,385
VEHICLE COURSE AND TURN TIMER APPARATUS
Alonzo R. Moeller, 1706 Cherrytree Lane, Mountain View, Calif. 94040
Filed July 17, 1964, Ser. No. 383,424
6 Claims. (Cl. 340—23)

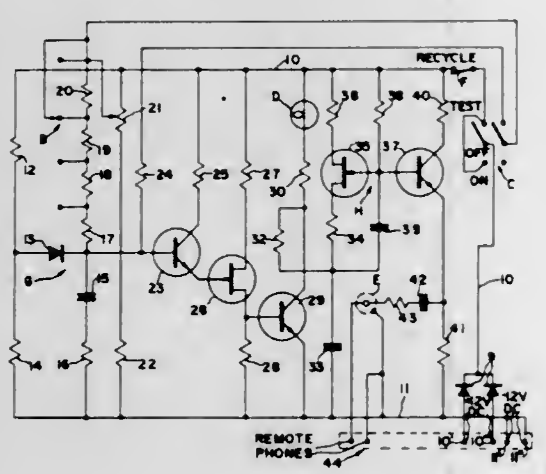

A vehicle course and turn timer having a timing circuit with a capacitor, a selectable series of resistors for controlling the charging rate of the capacitor and a diode and a unijunction transistor operable with the time integrated voltage at the end of the time interval for operating a warning signal with the diode conducting to the unijunction transistor when the capacitor is discharged. The timer is tested by shunting the resistors for a short timing interval and means are provided for momentarily interrupting the power to the timing circuit for reinitiating the time interval of the timing circuit.

3,397,386
TELEMETERING AND SUPERVISORY CONTROL SYSTEM HAVING NORMALLY CONTINUOUS TELEMETERING SIGNALS
Bernard W. Bishup, Elk Grove Village, and Anthony A. Repeta and Frank C. Giarrizzo, Chicago, Ill., assignors, by mesne assignments, to Leeds & Northrup Company, Philadelphia, Pa., a corporation of Pennsylvania
Filed Apr. 3, 1963, Ser. No. 270,312
9 Claims. (Cl. 340—163)

A central to remote station supervisory control and telemetering station is disclosed. Equipment monitoring digital address signals are normally continuously transmitted to the remote station. Manually operated control

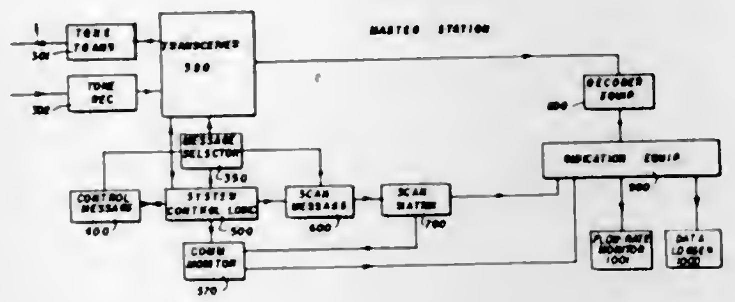

circuitry is provided at the central station for interrupting the monitoring signals and sending control signals to the remote station equipment.

3,397,387
SELECTION APPARATUS
John E. Hickerson and Henry R. Kruspe, Lexington, Ky., assignors to International Business Machines Corporation, Armonk, N.Y., a corporation of New York
Filed Dec. 11, 1964, Ser. No. 417,579
22 Claims. (Cl. 340—164)

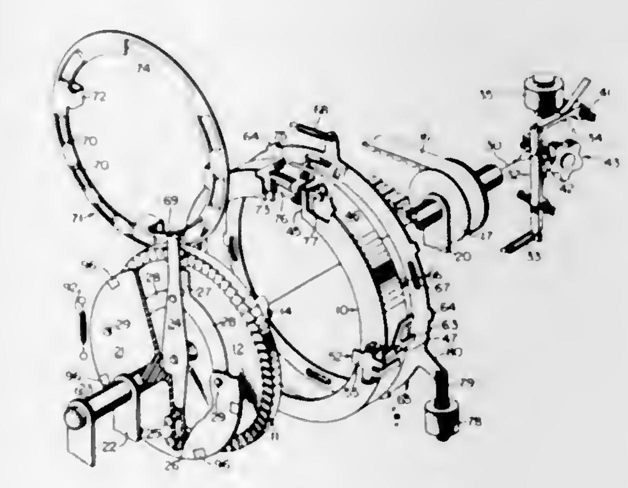

A selection apparatus includes a movable actuating member that is adapted to be connected to driving means for movement through a cycle. During the movement of the movable actuating member by the driving means, the actuating member passes one or more information stations with each of the stations having movable means adapted to be actuated by the actuating member during movement of the actuating member by the driving means. The actuating member may be moved into engagement with one or more of the movable means during the movement of the actuating member through its cycle. The selection apparatus has means to stop the actuating member at the completion of a cycle of movement of the actuating member.

3,397,388
MATRIX CONTROL CIRCUIT
Paul Abramson, Yorktown Heights, Pao H. Chin, Pleasantville, and George R. Stilwell, Jr., West Nyack, N.Y., assignors to International Business Machines Corporation, New York, N.Y., a corporation of New York
Filed Dec. 20, 1963, Ser. No. 332,058
13 Claims. (Cl. 340—166)

A circuit for energizing one or more thyratron-like elements arranged in a matrix comprising a first switching means normally maintaining a sustaining potential across the thyratron-like elements and operable to remove the

sustaining potential from a first group of said thyratron-like elements, a second set of switching means normally latching the control element of said thyratron-like elements at a voltage insufficient to energize said thyratron-like elements and capable of selectively removing said latching potential from said first group of the thyratron-like elements, and a third set of switching means normally

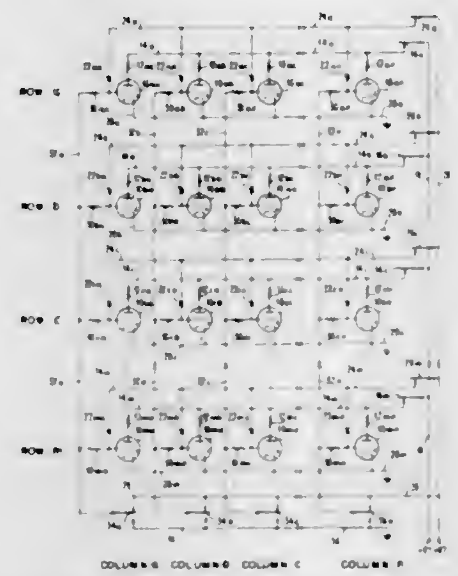

applying a potential to said control element of said thyratron-like elements similar to the potential applied through said second set of switching means and said third set of switching means capable of removing said potential from a second group of said thyratron-like elements so that said first group and said second group of the thyratron-like elements have only one common thyratron-like element.

3,397,389
GRAPHICAL DATA RECORDER SYSTEM
Alan K. Jennings, Anaheim, Ronald D. Cone, Saratoga, and Eugene Seid, Los Angeles, Calif., assignors to California Computer Products, Inc., Anaheim, Calif., a corporation of California
Original application May 21, 1962, Ser. No. 196,134, now Patent No. 3,199,111, dated Aug. 3, 1965. Divided and this application Nov. 25, 1964, Ser. No. 413,868
13 Claims. (Cl. 340—172.5)

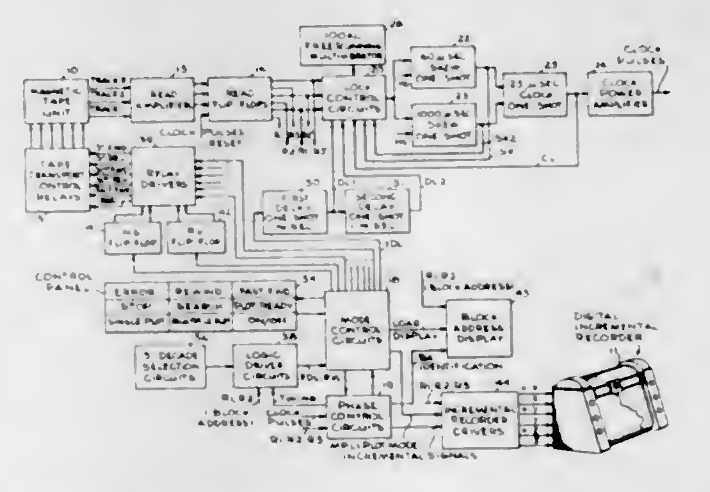

A system for searching for and identify desired blocks of graphical plot data stored on magnetic tape with each block having address information, the addresses being in numerical order. The magnetic tape is first driven forward, and the block address is compared to a desired address. Depending upon the relative magnitude relationship between the addresses, the tape is driven at high speed in the forward or reverse direction until the desired block is located. The tape is stopped and driven in the opposite direction at normal speed as the address is verified. Two different clock rates are provided, one of these being locked to data derived at normal speed from the tape, and the other being considerably slower and used to provide compensation intervals in which mechanical and other actions are effected.

3,397,390
LOGIC ARRAY FOR ASSOCIATIVE MEMORY
Robert C. Minnick, Redwood City, Calif., assignor to Stanford Research Institute, Menlo Park, Calif., a corporation of California
Filed Mar. 25, 1965, Ser. No. 442,711
8 Claims. (Cl. 340—172.5)

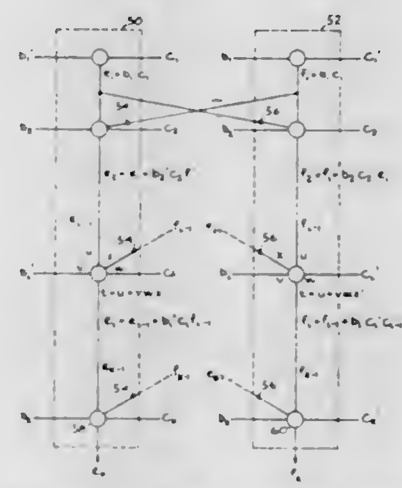

An array of logic cells is provided which affords comparision of two data words to determine whether there is inclusion or inverse inclusion present. Also, a column of identical dual cells is provided, which enables an arithmetical comparsion to be made and also, by appropriate cutting of connections between the two columns, a measure of inclusion or inverse inclusion can also be obtained.

3,397,391
COMPACT STORAGE CONTROL APPARATUS
Gerald H. Ottaway, Hyde Park, N.Y., and Helmut Painke, Sindelfingen, Titus Scheler, Boblingen, and Helmut Will, Sindelfingen, Germany, and William V. Wright, Poughkeepsie, N.Y., assignors to International Business Machines Corporation, Armonk, N.Y., a corporation of New York
Filed Oct. 22, 1965, Ser. No. 502,196
7 Claims. (Cl. 340—172.5)

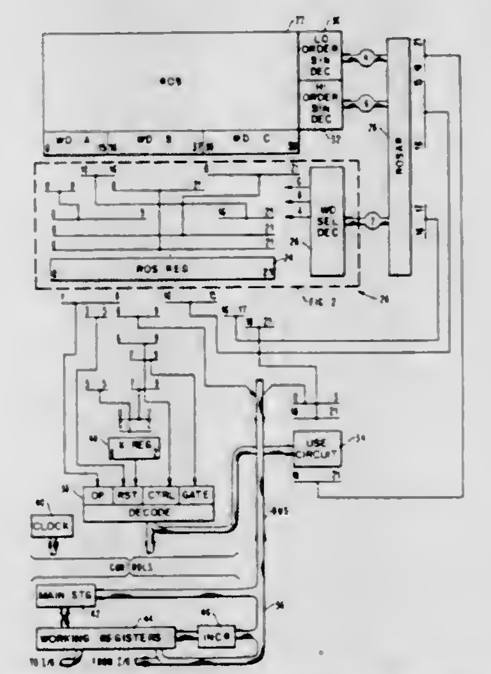

Disclosed is a microprogram control for a data processing system wherein microprogram control words are stored in a read only store and wherein those words are read out to control the operation of the system. The particular word read out is selected by an address register which specifies a particular word in the read only store.

Each word establishes a particular set for control conditions throughout the system. Each word contains a plurality of portions where only one of those plurality is gated to a read only store output register during one cycle. The selection of which portion will be gated to the output register is under control of a decoder which decodes data manifestations applied to the address register from the output register. One of the portions may include N fewer data manifestations than the other portions, in which case, N data manifestations saved from a portion gated during a previous cycle are combined with that portion and together they are applied to the address register. By saving the N data manifestations from cycle to cycle, redundant data locations in the read only store are eliminated thereby reducing the overall size of the read only store.

3,397,392
INFORMATION STORAGE AND CATEGORY SELECTOR
Seymour Henig, Kensington, and Ervin C. Palasky, Silver Spring, Md., assignors to the United States of America as represented by the Secretary of Commerce
Original application June 21, 1963, Ser. No. 289,761, now Patent No. 3,300,066, dated Jan. 24, 1967. Divided and this application Oct. 31, 1966, Ser. No. 591,003
16 Claims. (Cl. 340—172.5)

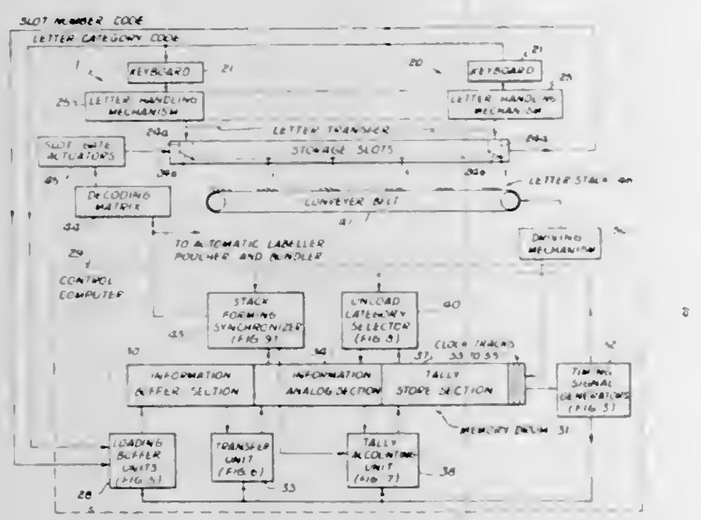

This application describes an information storage and selector system that is used in a sorting machine. The machine includes several stations, each having a rack containing a plurality of slots positioned above a conveyor belt common to all stations. An operator, reading the destination of a letter to be sorted, operates a keyboard at a station to generate a category code representing the destination. The letter is then dropped in the first empty slot and the number code of the slot is generated.

An information storage system receives the category and slot number codes as they are aperiodically generated at the sorting stations and effects the storage of these codes in a loading buffer section. The stored number code and an identical number code pre-recorded in the system are employed to place the category code for each letter in a section whose position in a memory is analogous to the letter's physical location in its rack. A running inventory with respect to categories is kept for the letters stored in the slots at each station. Periodically, a selector system makes a determination premised on optimum inventory reduction, of a selected category to be unloaded from the slots. The code of this category is recorded in a section of the memory, which retains a list of all selected categories. The selector system continuously makes identity comparisons between the latter categories and those of the letters stored in the slots. Each identity is converted to a gate-opening signal, the latter controlling the gate of a respective one of said slots, permitting the letter contained therein to fall in the appropriate stack forming on the conveyor belt.

3,397,393
CAPACITOR READ-ONLY MEMORY WITH PLURAL INFORMATION AND GROUND PLANES
Paul H. Palmateer, Wappingers Falls, and Wilbur D. Pricer, Pleasant Valley, N.Y., assignors to International Business Machines Corporation, Armonk, N.Y., a corporation of New York
Filed Aug. 10, 1965, Ser. No. 478,558
11 Claims. (Cl. 340—173)

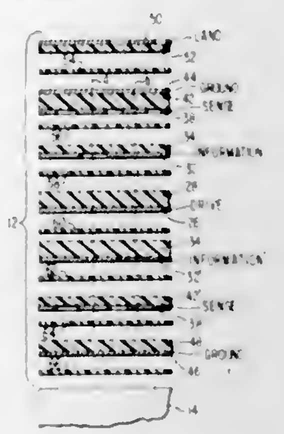

11. A capacitor read-only memory comprising:
(a) a drive plane including a plurality of drive lines thereon,
(b) a sense plane parallel to but spaced from the drive plane, the sense plane having a plurality of sense lines thereon positioned to intersect without physically contacting the drive lines to create a plurality of intersections capable of providing a capacitive coupling,
(c) an information plane positioned between the drive plane and the sense plane, the information plane carrying means for permanently but selectively varying the capacitive coupling at each of the intersections,
(d) symmetrical ground planes positioned on opposite sides of the drive plane, and
(e) means permanently laminating all of the aforesaid planes together.

3,397,394
THIN FILM MAGNETIC CORE MATRIX MEMORY DEVICE
Hisao Maeda, 211 Minamisenzoku-machi, Ota-ku, Tokyo-to, Japan; Hisaaki Maeda, heir of said Hisao Maeda, deceased
Filed May 8, 1964, Ser. No. 365,892
Claims priority, application Japan, May 11, 1963, 38/24,881
7 Claims. (Cl. 340—174)

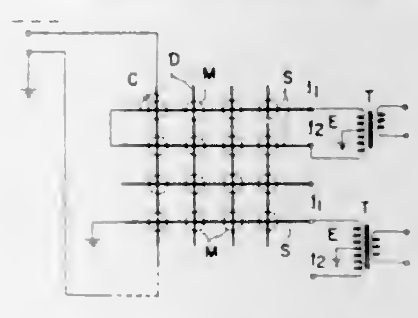

A magnetic matrix memory device provided with drive lines and sense lines crossing the drive lines and with output transformers. The sense lines are grouped, and each group of adjacent parallel sense lines, attached to a corresponding output transformer, constitutes a forward and a return line. The primary winding of the attached output transformer is connected at both its terminals to the same side terminals of the sense line group, and the midpoint of the primary winding is grounded. The primary winding has an impedance which is higher than that of the sense lines.

3,397,395
FILTER CONDITION INDICATOR
William R. Pierce, Flint, Mich., assignor to General Motors Corporation, Detroit, Mich., a corporation of Delaware
Filed Sept. 20, 1965, Ser. No. 488,501
6 Claims. (Cl. 340—239)

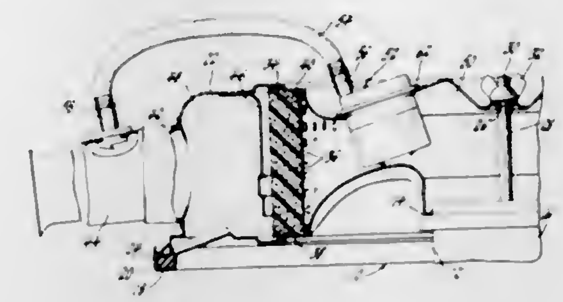

5. A filter condition indicator for an air cleaner silencer having a housing, a snorkel tube air inlet connected thereto, a filter element in said housing for removing contaminants from air passing therethrough whereby such removal of contaminants creates a restriction build-up on said filter element and reduces the amount of air that can be passed therethrough for a given air pressure, said filter having an upstream side and a downstream side, a filtered air compartment in said air cleaner silencer assembly on the downstream side of said filter, an air outlet in said air cleaner silencer assembly opening from said filtered air compartment, a filter condition indicator for indicating restriction build-up in said filter element including a first chamber connected to said snorkel tube for receiving in said first chamber air under the same pressure as that therein, a port in said first chamber for connecting said first chamber to the atmosphere, a second chamber having an opening for connecting said second chamber to said filtered air compartment for receiving in said second chamber air under the same pressure as that therein, a passage connecting said chambers, sealing means having a closed position and an open position, said sealing means effectively sealing said passage and said port and allowing communication between said second chamber and said filtered air compartment through said opening when in said closed position, said sealing means effectively sealing said opening and allowing communication between said chambers, said snorkel tube and the atmospher when in said open position, said spring means biasing said sealing means to said closed position, and indicating means for indicating movement of said sealing means to said open position.

3,397,396
DECODING DEVICE WITH A NONLINEAR COMPANDING CHARACTERISTIC
Hisashi Kaneko, Tokyo, Japan, assignor to Nippon Electric Company, Limited, Tokyo, Japan, a corporation of Japan
Filed Jan. 13, 1964, Ser. No. 337,310
Claims priority, application Japan, Jan. 30, 1963, 38/4,213
16 Claims. (Cl. 340—347)

1. A device for converting a coded input signal into a nonlinearly companded output signal comprising:
(a) passive attenuation means having a plurality of defined attenuating portions,
(a–1) each defined portion providing a substantially fixed preselected attenuation ratio and having a predetermined substantially constant input impedance thereby to produce a preset nonlinearity;
(b) switch means connected to each defined attenuating portion;
(c) a coded input signal source connected to said switch means;
(d) power supply means and output signal deriving means connected to opposite terminals of said passive attenuation means;

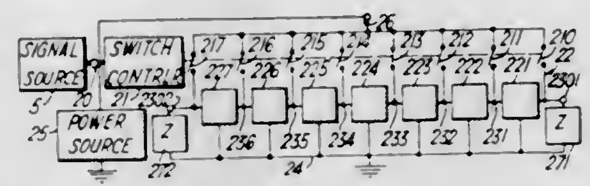

(e) and switch control means under control of said signal source for operating a fixed number, at least one, of said switch means selectively, for each value of the said signals to regulate the energy flow from the power supply means through selected portions of the attenuating means to the output signal deriving means.

3,397,397
TERRAIN-FOLLOWING RADAR
George M. Barney, Dallas, Tex., assignor to Texas Instruments Incorporated, Dallas, Tex., a corporation of Delaware
Filed Dec. 20, 1966, Ser. No. 603,242
8 Claims. (Cl. 343—7)

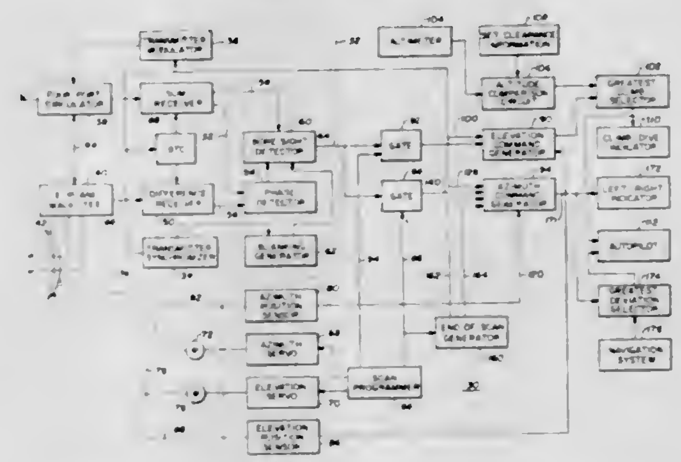

An airborne, forward looking radar is disclosed which provides both elevation and azimuth scanning thereby allowing an aircraft to circumnavigate obstacles where possible in order to maintain the same low altitude, and rise over obstacles only when circumnavigation has exceeded predetermined limits from a desired course.

3,397,398
DOPPLER RANGE MEASURING SYSTEM
Oscar B. Dutton, Palos Verdes Estates, and Charles B. Petry, San Diego, Calif., assignors, by mesne assignments, to Babcock Electronics Corporation, Costa Mesa, Calif., a corporation of California
Continuation-in-part of application Ser. No. 467,590, June 28, 1965. This application Nov. 28, 1966, Ser. No. 597,266
9 Claims. (Cl. 343—13)

The specification of this application discloses a radar system for finding the distance to one moving object from another. The system is of the Doppler type in which the Doppler signal is derived by the simultaneous transmission to the target of two CW signals having a small, fixed frequency difference. The two CW signals are pulsed so that the on-time is equal to the time required for a radio signal to travel from the transmitter to the maximum range and back to the receiver. The off-time is made long relative to the on-time so that echoes from targets at most ranges beyond the desired range will not be detected and indicated. In one embodiment, rejection of such long range

signals is accomplished by rendering the receiving means inoperative at a time following initiation of a transmitter

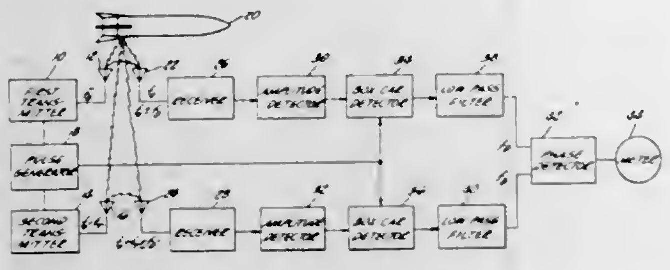

pulse corresponding to twice the transmit time to the maximum range from the transmitter.

3,397,399
COLLAPSIBLE DISH REFLECTOR
Robert R. Carman, Tallmadge, and Salvatore J. Pipitone, Akron, Ohio, assignors to Goodyear Aerospace Corporation, Akron, Ohio, a corporation of Delaware
Filed Feb. 7, 1966, Ser. No. 525,509
7 Claims. (Cl. 343—915)

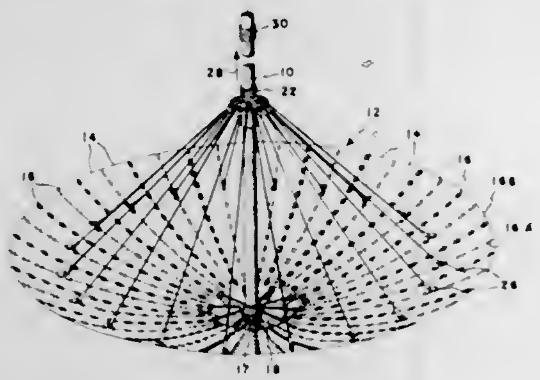

2. In an antenna the combination of
a cylindrically shaped pole,
a substantially O-shaped ring, received in complementary sliding relationship by said pole,
a compound curvature reflector secured at the center thereof to one end of said pole, the reflector comprising,
a plurality of substantially wedge shaped compound curved petals made from a flexible material,
a plurality of relatively flexible piano hinges pivotally connecting the lateral edges of said petals to each other,
means pivotally connecting the inner end of at least certain of said hinge pins to the one end of said pole to allow pivotal movement of said hinge pins in a plane which includes the pole, and
a plurality of support rods, one end of each rod being pivotally secured to said O-shaped ring and the other end of each rod being pivotally secured to at least certain hinge pins at points equidistant from the center of said antenna.

3,397,400
METHOD AND APPARATUS FOR RADIO NAVIGATION
Hans W. Maass, Gehrden, and Friedhelm K. Sender, Hannover, Germany, assignors to Prakla Gesellschaft fur Praktische Lagerstattenforschung G.m.b.H., Hannover, Germany, a corporation of Germany
Filed Nov. 10, 1966, Ser. No. 593,392
Claims priority, application Germany, Nov. 13, 1965, P 38,119
13 Claims. (Cl. 343—112)

Radio navigation system including two fixed transmitter stations and a receiver on a vehicle traveling a predetermined course with respect to the two stations. Atomic clocks are utilized in the transmitters and receiver to accurately maintain frequency and phase. Computing means in the receiver determines the distance of the receiver to each transmitter and indicates if the vehicle is

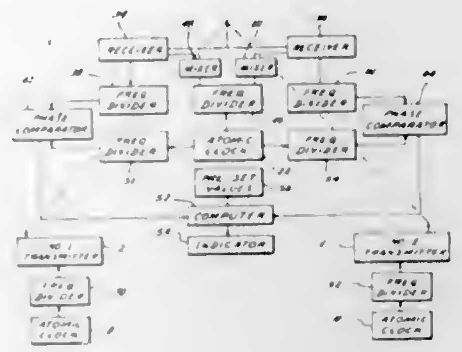

off course. The bandwidth for the transmitters may be only a few cycles.

3,397,401
VOICE OPERATED COMMUNICATION SYSTEM
Ross C. Winterbottom, Santa Monica, Calif., assignor to Hughes Aircraft Company, Culver City, Calif., a corporation of Delaware
Filed May 27, 1966, Ser. No. 553,517
4 Claims. (Cl. 343—177)

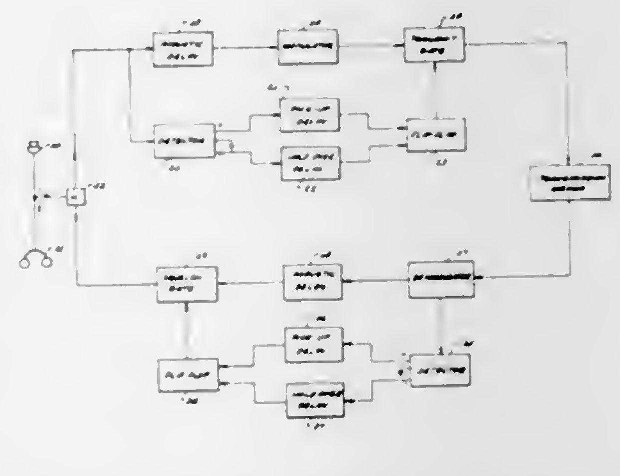

In a voice-operated transmitter, application of the modulating signal is delayed until after transmission of the carrier has begun, and the carrier continues until after the termination of the modulating signal. A detector produces control signals in response to the modulating signal and applies them to switch means provided to prevent operation of the transmitter. In another embodiment, control signals are modulated onto the carrier prior to and after modulation of the carrier by the modulating signal. In the receiver, a squelch gate is opened before the audio signal reaches the gate and closed after the audio signal has passed through.

3,397,402
SYSTEM FOR DETERMINING THE LISTENING HABITS OF WAVE SIGNAL RECEIVER USERS
Henry W. Schneider, Voorburg, Netherlands, assignor to Intomart Instituut voor Toegepast Marktonderzoek, Hilversum, Netherlands
Filed Sept. 13, 1966, Ser. No. 579,087
Claims priority, application Austria, Sept. 14, 1965, A 8,403/65; Aug. 25, 1966, A 8,089/66
16 Claims. (Cl. 346—37)

Apparatus is disclosed for registering audience tuning habits in radio or television sets. A system provides for transmission of a set of subsonic audiofrequency tone signals which turn on a recorder at the receiver to record

the tones. The recorder is operated only a short time to indicate the actual transmitted signals and is turned off

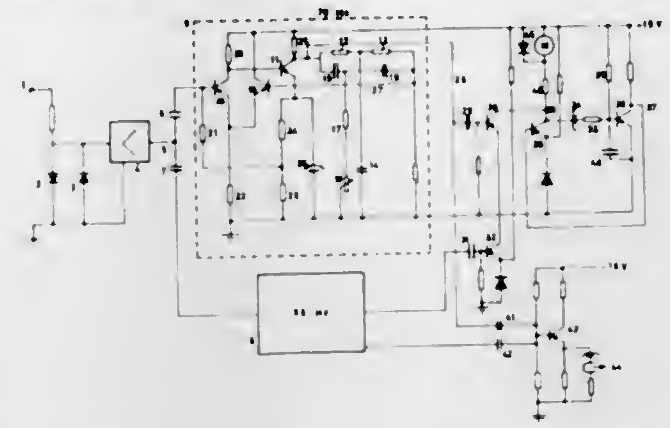

either by a time delay device or by a transmitted signal at the end of a code group identifying the message.

3,397,403
FLUID ACTUATED PRINTER
George Boyd Greene, Lafayette, Calif., assignor of ninety percent to Greene Engineering Company, a corporation
Filed Nov. 21, 1966, Ser. No. 595,975
16 Claims. (Cl. 346—72)

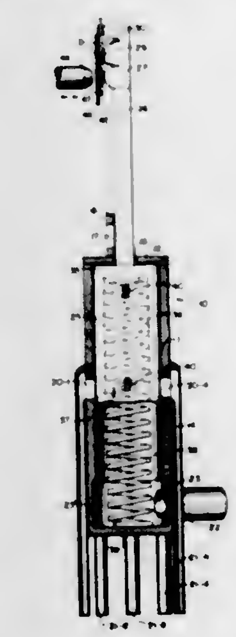

1. A signal translating and manifesting device comprising:
a first member containing a chamber;
a second member closely fitting within said chamber, slidable therewithin parallel to an axis, and defining therewith a variable volume compartment in which may be maintained pressures different from that without said first member;
a set of ports passing through said first member, none of said ports lying on the same line parallel to said axis with any other of said ports;
a plurality of groups of ports passing through the closely fitting surface of said second member and communicating with said compartment, each of said groups having each of its ports in registration with one of the ports of said set when said second member is located at a predetermined position within said first member;
means for urging said second member toward a particular position within said first member;
means for successively applying signals consisting of permutations of pressures to the ports of said set, whereby said second member is successively moved to positions corresponding to said signals;
carrier means constrained to move with said second member and carrying symbol means corresponding to said signals;
and manifesting means associated with said carrier means for successively manifesting the symbols corresponding to the signals successively applied to said set of ports.

3,397,404
CONSTANT CHARGE DRIVING CIRCUIT FOR ELECTROLYTIC RECORDERS
Wilbur H. Highleyman, Murray Hill, N.J., assignor to Data Trends, Inc., Parsippany, N.J., a corporation of New Jersey
Filed May 20, 1964, Ser. No. 368,947
2 Claims. (Cl. 346—74)

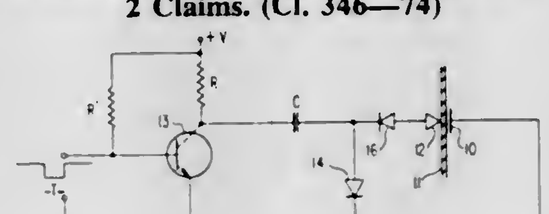

An electronic drive circuit for an electrolytic printer is disclosed which functions to deliver a constant charge of electricity to the printing electrodes for each applied input pulse in order to maintain a uniform degree of contrast between the recording medium and the data recorded thereon regardless of variations in the electrical resistance of the recording medium. The constant charge is achieved by providing a condenser charge and discharge circuit in combination with switching means so that the condenser either discharges through or is charged through the recording medium in response to the presence of a recording pulse.

3,397,405
RECORDER AND PROCESSOR FOR USE IN WELL LOGGING
John A. Stafford, Houston, Tex., assignor to Schlumberger Technology Corporation, Houston, Tex., a corporation of Texas
Continuation-in-part of application Ser. No. 481,626, Aug. 23, 1965. This application Aug. 4, 1966, Ser. No. 573,753
7 Claims. (Cl. 346—108)

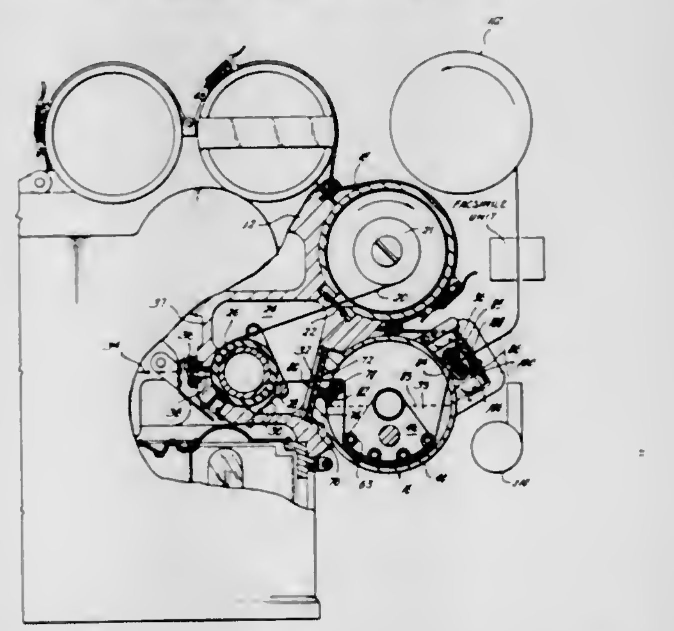

Apparatus for processing well logging data including a casing with a dark chamber and at least one film supply spool. A processor is detachably mounted on the casing and has conveyance means for transporting the film through the processor after exposure in the dark chamber, the processor containing a monobath solution for developing and fixing the film. The conveyance means is coupled to the cable on which a logging tool is suspended in a well bore for driving the film at velocities determined by well logging operations.

DESIGNS

AUGUST 13, 1968

211,925
BRIEFS
Antoine Charles Henri Richard, Lille, Nord, France, assignor to Tricotages Mecaniques Troyen, Lomme, Nord, France, a corporation of France
Filed Dec. 13, 1966, Ser. No. 5,019
Term of patent 14 years
Claims priority, application France June 15, 1966
(Cl. D2—11)

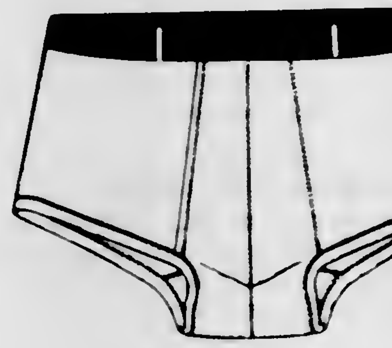

211,926
BOTTLE OR THE LIKE
John M. Kelly, Toledo, Ohio, assignor to The Sinclair Manufacturing Company, Toledo, Ohio, a corporation of Ohio
Filed Jan. 16, 1967, Ser. No. 5,432
Term of patent 14 years
(Cl. D9—32)

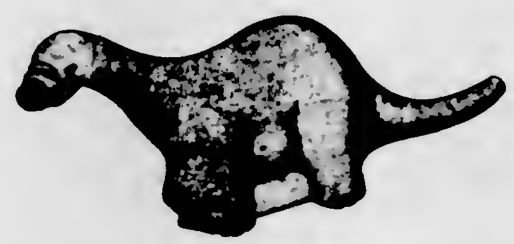

211,927
JUG
John J. Phelan, South Laguna, Calif., assignor, by mesne assignments, to Schenley Industries, Inc., New York, N.Y., a corporation of Delaware
Filed June 30, 1966, Ser. No. 2,887
Term of patent 14 years
(Cl. D9—41)

211,928
BOTTLE
Robert R. Burnett, Webster, N.Y., assignor to Xerox Corporation, Rochester, N.Y., a corporation of New York
Filed Dec. 2, 1966, Ser. No. 4,897
Term of patent 14 years
(Cl. D9—44)

211,929
DECANTER
Russell V. Stone, Staatsburg, N.Y., assignor to Schenley Industries, Inc., New York, N.Y., a corporation of Delaware
Filed Feb. 16, 1967, Ser. No. 5,836
Term of patent 14 years
(Cl. D9—72)

211,930
COMBINED BOTTLE AND COVER THEREFOR
Melvin S. Shutt, Bartlesville, Okla., assignor to Phillips Petroleum Company, a corporation of Delaware
Filed Feb. 7, 1967, Ser. No. 5,716
Term of patent 14 years
(Cl. D9—89)

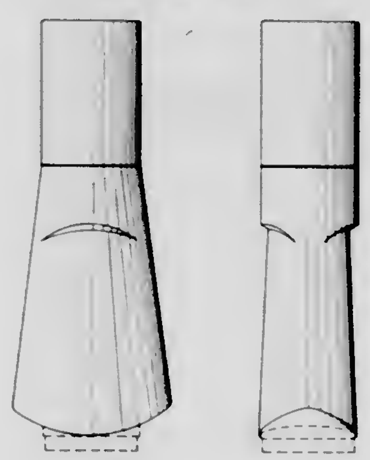

211,931
BOTTLE
Clara Virginia Eicholtz, Midland, and Bertrand N. Trombley, Bloomfield Hills, Mich., assignors to The Dow Chemical Company, Midland, Mich., a corporation of Delaware
Filed May 28, 1965, Ser. No. 85,508
Term of patent 14 years
(Cl. D9—100)

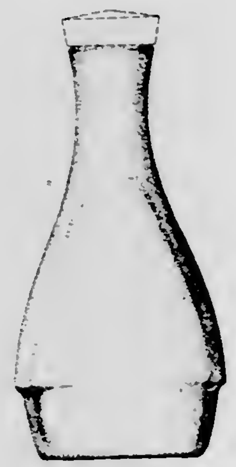

211,932
JAR
James E. Plummer, Toledo, Ohio, assignor to Owens-Illinois, Inc., Toledo, Ohio, a corporation of Ohio
Filed Dec. 29, 1967, Ser. No. 9,992
Term of patent 14 years
(Cl. D9—105)

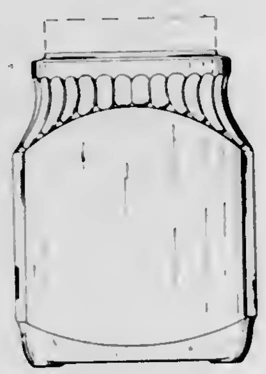

211,933
DISPENSING CONTAINER FOR POWDER OR THE LIKE
Willard R. Horne, Northvale, N.J., assignor to Johnson & Johnson, a corporation of New Jersey
Filed Dec. 12, 1966, Ser. No. 5,024
Term of patent 14 years
(Cl. D9—144)

211,934
BOX COVER OR SIMILAR ARTICLE
Frank W. Derenski, Los Angeles, Calif.
(11009 Morrison St., North Hollywood, Calif. 91607)
Filed July 21, 1967, Ser. No. 7,937
Term of patent 14 years
(Cl. D9—254)

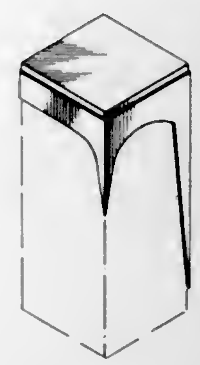

211,935
KNOB OR THE LIKE
Lionel C. Algoren, Evanston, Ill., assignor to National Lock Co., Rockford, Ill., a corporation of Delaware
Filed Dec. 14, 1967, Ser. No. 9,781
Term of patent 14 years
(Cl. D10—8)

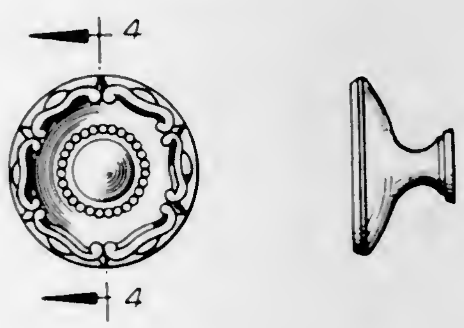

211,936
BAIL PULL OR THE LIKE
Lionel C. Algoren, Evanston, Ill., assignor to National Lock Co., Rockford, Ill., a corporation of Delaware
Filed Dec. 14, 1967, Ser. No. 9,787
Term of patent 14 years
(Cl. D10—8)

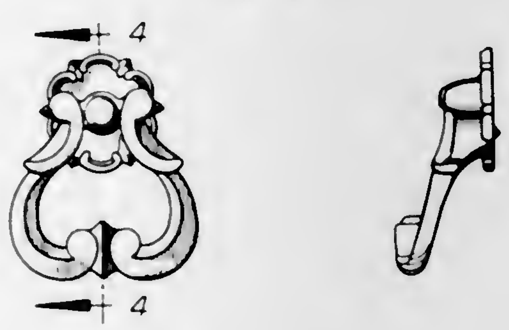

211,937
BACKPLATE OR THE LIKE
Lionel C. Algoren, Evanston, Ill., assignor to National Lock Co., Rockford, Ill., a corporation of Delaware
Filed Dec. 15, 1967, Ser. No. 9,792
Term of patent 14 years
(Cl. D10—8)

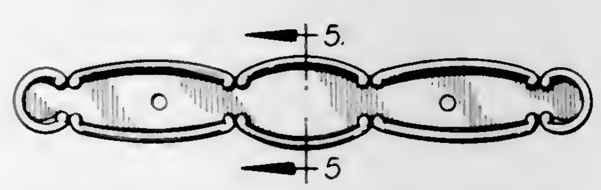

211,938
PULL OR THE LIKE
Lionel C. Algoren, Evanston, Ill., assignor to National Lock Co., Rockford, Ill., a corporation of Delaware
Filed Dec. 15, 1967, Ser. No. 9,793
Term of patent 14 years
(Cl. D10—8)

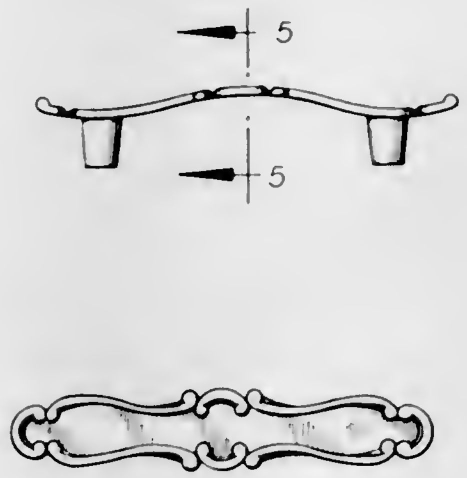

211,939
PULL OR THE LIKE
Vytant P. Aleks, Rockford, Ill., assignor to National Lock Co., Rockford, Ill., a corporation of Delaware
Filed Jan. 26, 1968, Ser. No. 10,320
Term of patent 14 years
(Cl. D10—8)

211,940
BAIL PULL OR THE LIKE
Vytant P. Aleks, Rockford, Ill., assignor to National Lock Co., Rockford, Ill., a corporation of Delaware
Filed Jan. 26, 1968, Ser. No. 10,322
Term of patent 14 years
(Cl. D10—8)

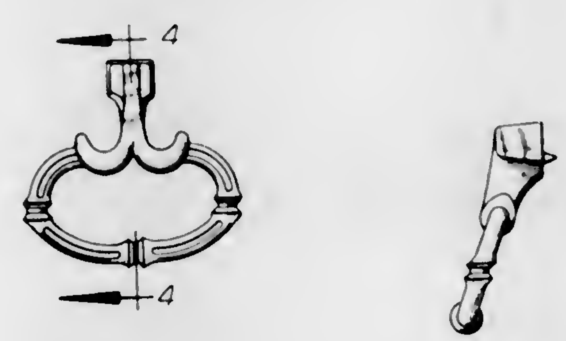

211,941
ARMORED VEHICLE
Irwin R. Barr, Lutherville, Md., assignor to AAI Corporation, Cockeysville, Md., a corporation of Maryland
Filed May 3, 1967, Ser. No. 6,934
Term of patent 14 years
(Cl. D14—3)

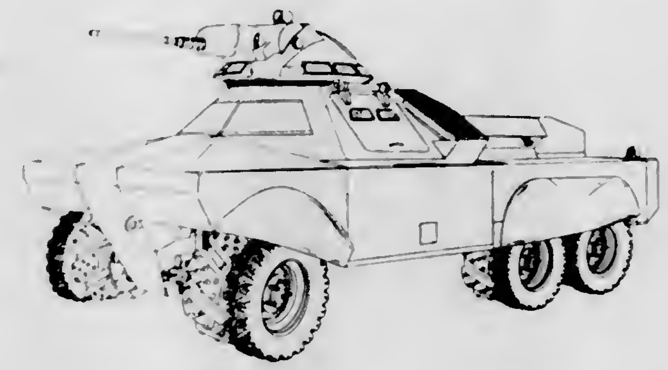

211,942
BUILDING BRICK
Geoffrey Benjamin Hern, Byecroft, Bircher, near Leominster, Herefordshire, England
Filed Mar. 16, 1967, Ser. No. 6,266
Term of patent 14 years
(Cl. D18—2)

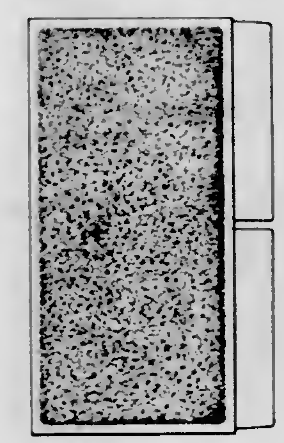

211,943
LAWN SPRINKLER
John D. Beinert, Babylon, N.Y., assignor to International Patent Research Corp., Moonachie, N.J., a corporation of New York
Filed Sept. 7, 1967, Ser. No. 8,519
Term of patent 7 years
(Cl. D23—7)

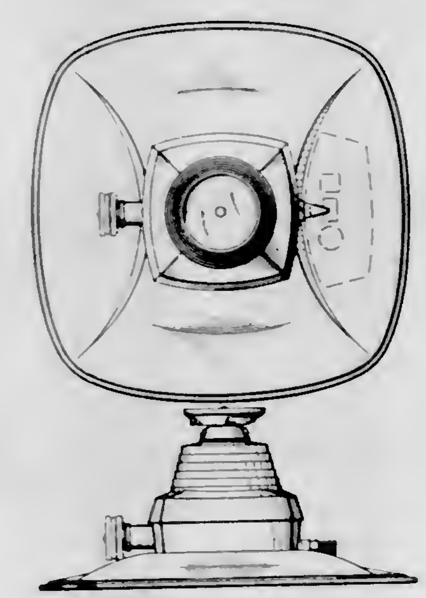

211,944
MOUNTING PLATE FOR TRAILER FURNACE
Robert R. Cooper and Paul F. Bloomingdale, Wichita, Kans., assignors to The Coleman Company, Inc., Wichita, Kans., a corporation of Kansas
Filed Mar. 16, 1967, Ser. No. 6,261
Term of patent 14 years
(Cl. D23—115)

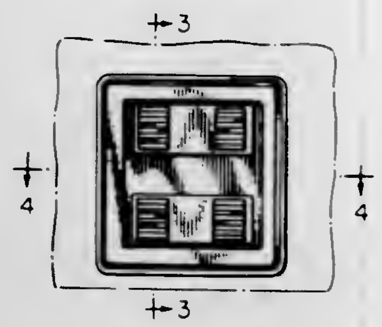

211,945
HUMIDIFIER
Hans Rudolf Stoop, Mutschellen, and Karl Flury, Dietikon, Switzerland, assignors to Defensor AG, Zurich, Switzerland, a Swiss corporation
Filed Nov. 8, 1967, Ser. No. 9,328
Claims priority, application Switzerland May 16, 1967
Term of patent 14 years
(Cl. D23—146)

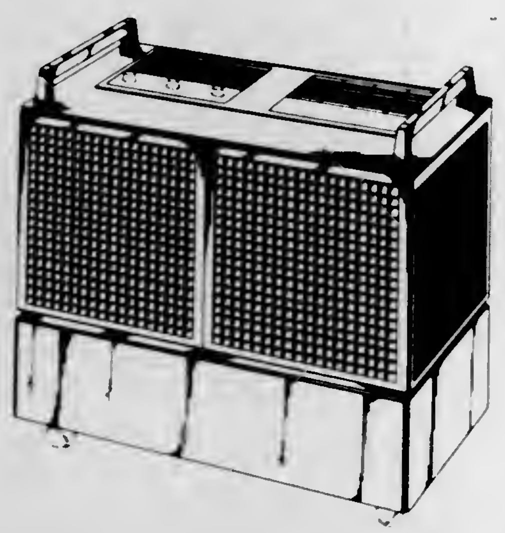

211,946
HUMIDIFIER
Karl Flury, Dietikon, Switzerland, assignor to Defensor AG, Zurich, Switzerland, a Swiss corporation
Filed Nov. 8, 1967, Ser. No. 9,329
Claims priority, application Switzerland May 16 1967
Term of patent 14 years
(Cl. D23—146)

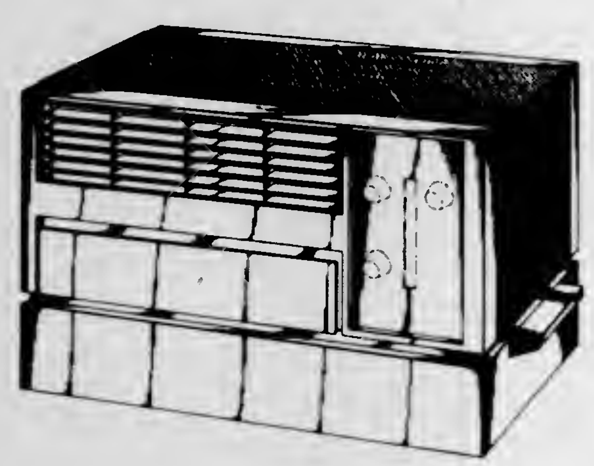

211,947
AIR CIRCULATOR
Masaya Matsuyoshi and Masaru Furuzawa, Osaka, Takehiro Sugihara, Ibaragi, and Katsumi Shimoyama, Osaka, Japan, assignors to Matsushita Electric Industrial Co., Ltd., and Matsushita Seiko Co., Ltd., both of Osaka, Japan, both corporations of Japan
Filed July 10, 1967, Ser. No. 7,745
Claims priority, application Japan Jan. 26, 1967
Term of patent 14 years
(Cl. D23—156)

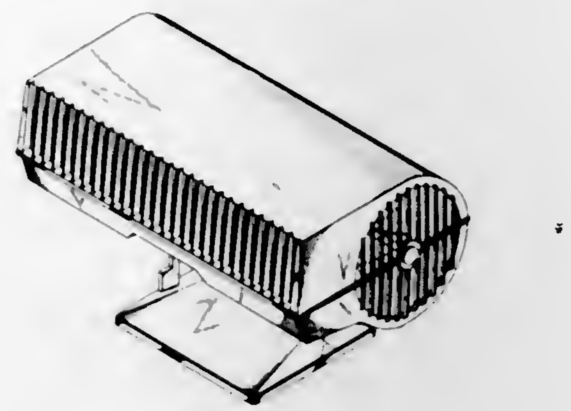

211,948
FRONT PANEL OF A HOUSING FOR ELECTRONIC EQUIPMENT
Burton W. Worral, Orange County, Fla., assignor to General Dynamics Corporation, a corporation of Delaware
Filed Aug. 9, 1967, Ser. No. 8,175
Term of patent 14 years
(Cl. D26—1)

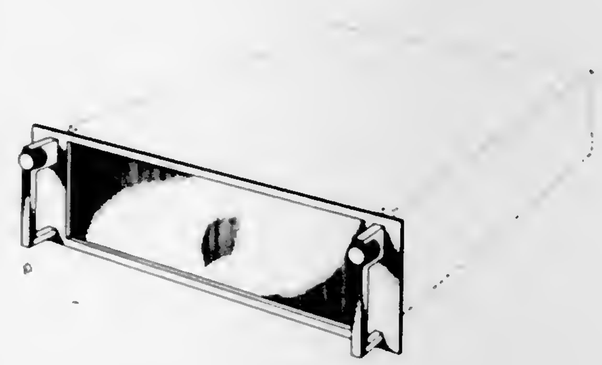

211,949
ELECTRICAL TERMINAL BLOCK
John A. Toedtman, Warson Woods, St. Louis, Mo., assignor to ITT Blackburn Corporation, St. Louis, Mo., a corporation of Delaware
Filed May 3, 1967, Ser. No. 6,933
Term of patent 14 years
(Cl. D26—1)

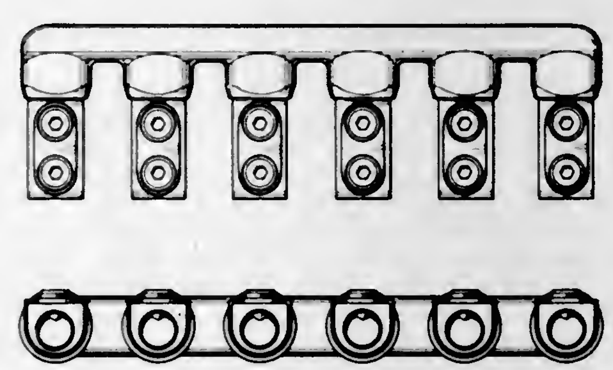

211,950
PUSHBUTTON CONTROL STATION
Neil J. Driscoll, 20980 Costanso St., Woodland Hills, Calif. 91364
Continuation-in-part of design application Ser. No. 6,525, Apr. 5, 1967. This application Sept. 5, 1967, Ser. No. 9,066
Term of patent 14 years
(Cl. D26—13)

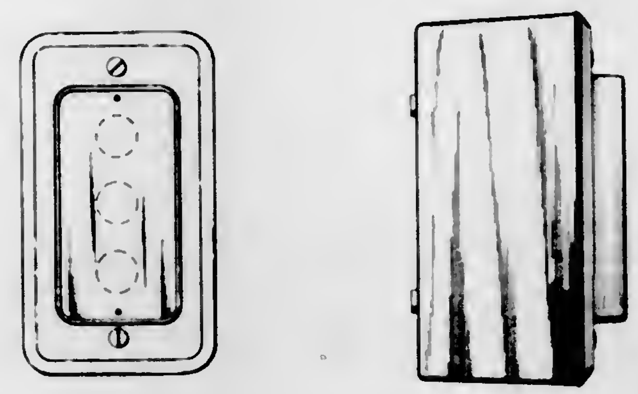

211,951
TELEPHONE HEADSET
George Thomson, London, Ontario, and William J. Driver, Burlington, Ontario, Canada, assignors to Northern Electric Company, Limited, Montreal, Quebec, Canada
Filed Sept, 26, 1967, Ser. No. 8,733
Term of patent 14 years
(Cl. D26—14)

211,952
MODULAR POWER SUPPLY
James P. Ettinger, 9 Manor Road, and Christian S. Otteson, Rockcrest Drive, both of Ridgefield, Conn. 06877
Filed Apr. 25, 1967, Ser. No. 6,837
Term of patent 14 years
(Cl. D26—15)

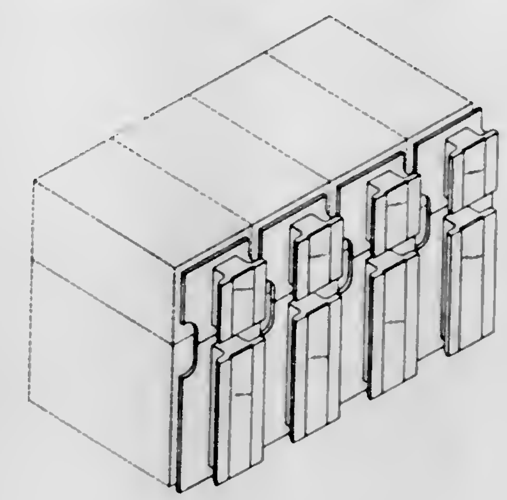

211,953
AQUARIUM ORNAMENT OR THE LIKE
Willis J. Whittaker, 451 Nevada St., Toledo, Ohio 43605
Filed Jan. 25, 1967, Ser. No. 5,555
Term of patent 7 years
(Cl. D30—12)

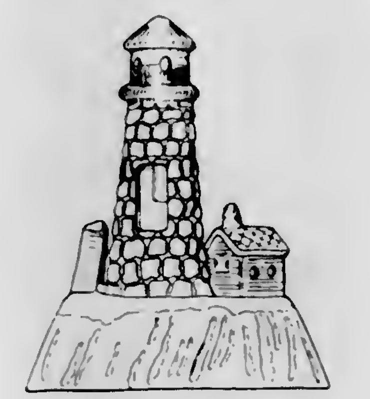

211,954
GAME DEVICE OR THE LIKE
Alfred E. Ischinger, 410 Kenhorst Blvd., Reading, Pa. 19602
Filed Mar. 29, 1967, Ser. No. 6,425
Term of patent 14 years
(Cl. D34—5)

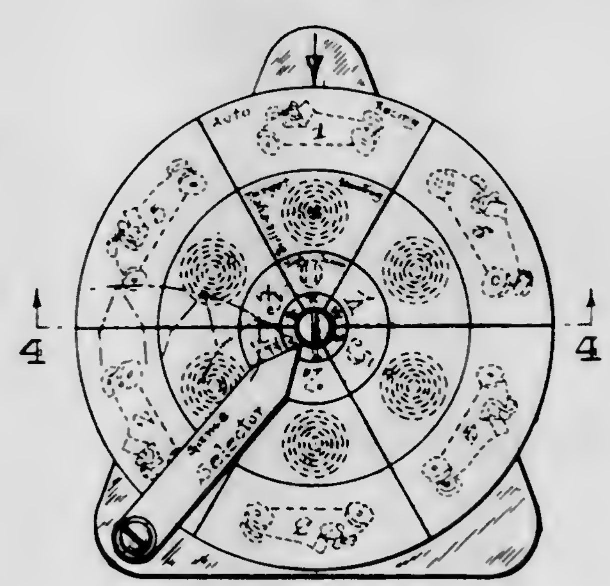

211,955
GOLF CLUB HEAD
John R. Brandell, 300 N. State St., Chicago, Ill. 60610
Filed May 17, 1967, Ser. No. 7,165
Term of patent 14 years
(Cl. D34—5)

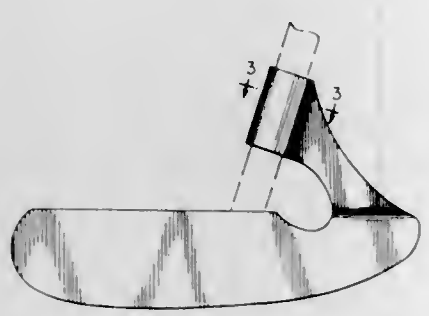

211,956
CLUB HOLDER FOR A GOLF BAG
William G. Christie, 1301 E. Michelle St., West Covina, Calif. 91790
Filed Oct. 3, 1967, Ser. No. 8,852
Term of patent 14 years
(Cl. D34—5)

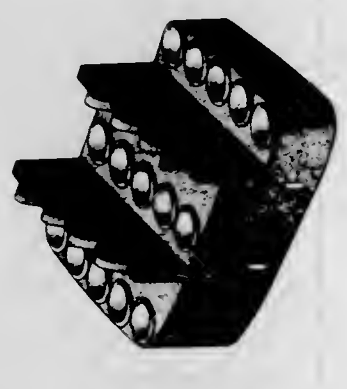

211,957
WINDOW PLANTER
Richard E. Penniman, Narberth, Pa., assignor to Safeguard Products Corporation, North Wales, Pa., a corporation of Pennsylvania
Filed Dec. 13, 1967, Ser. No. 9,753
Term of patent 7 years
(Cl. D35—3)

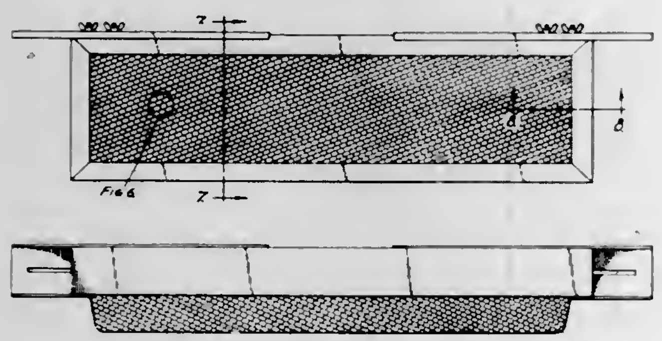

211,958
PULL-TYPE WINDROWER
William D. Long, Hesston, and Richard E. Ten Eyck, Wichita, Kans., assignors to Hesston Corporation, Inc., Hesston, Kans., a corporation of Kansas
Filed June 16, 1967, Ser. No. 7,495
Term of patent 14 years
(Cl. D40—1)

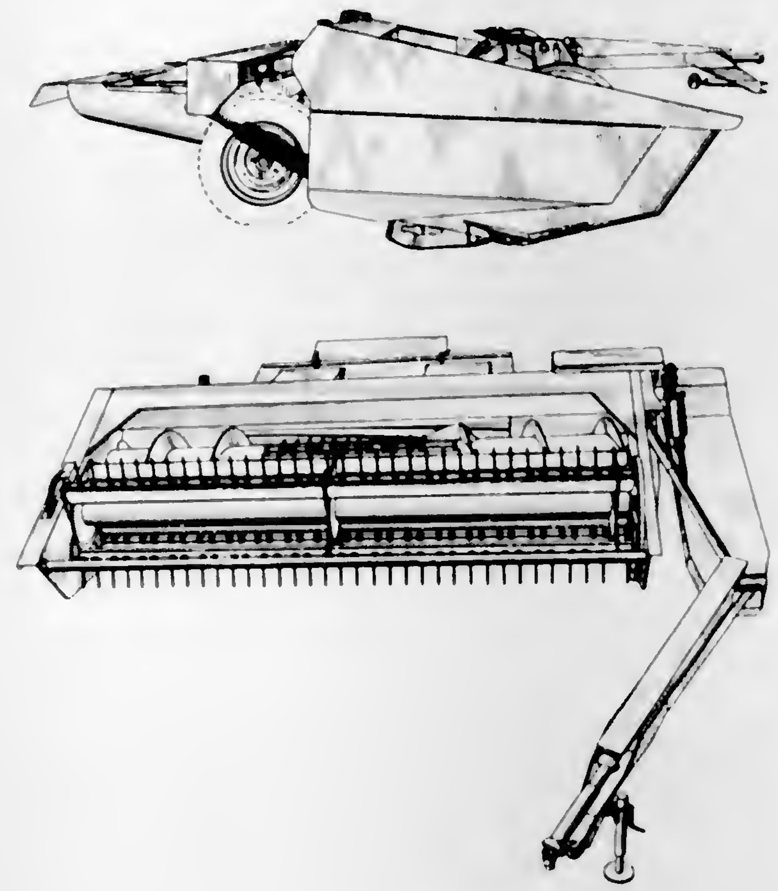

211,959
COTTON HARVESTER
Robert S. Brace and Edward L. Robinson, Jr., Memphis, Tenn., assignors to International Harvester Company, Chicago, Ill., a corporation of Delaware
Filed June 23, 1967, Ser. No. 7,570
Term of patent 14 years
(Cl. D40—1)

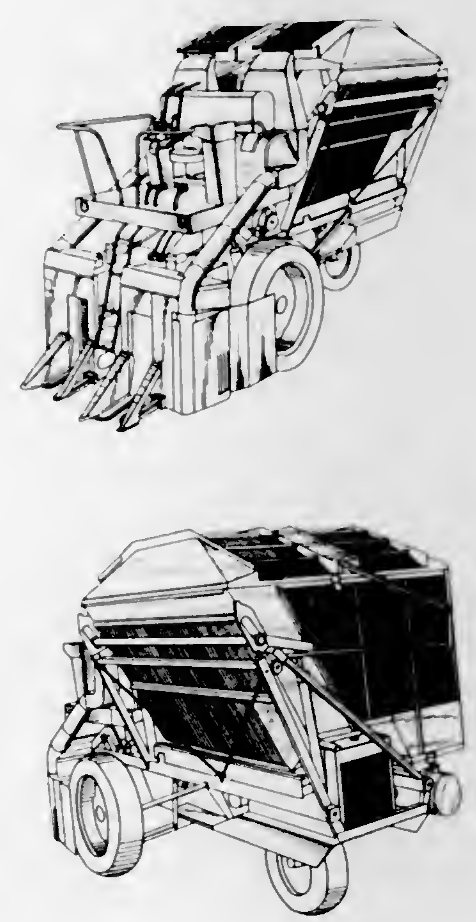

211,960
LINK CHAIN FOR A BRACELET OR THE LIKE
Morris D. Gandelman, Fort Lee, N.J., assignor to Jacoby-Bender, Inc., Woodside, N.Y., a corporation of New York
Filed July 26, 1967, Ser. No. 8,010
Term of patent 7 years
(Cl. D45—4)

211,961
BACKPLATE OR THE LIKE
George R. Sonnenleiter, Rockford, Ill., assignor to National Lock Co., Rockford, Ill., a corporation of Delaware
Filed Jan. 26, 1968, Ser. No. 10,321
Term of patent 14 years
(Cl. D50—6)

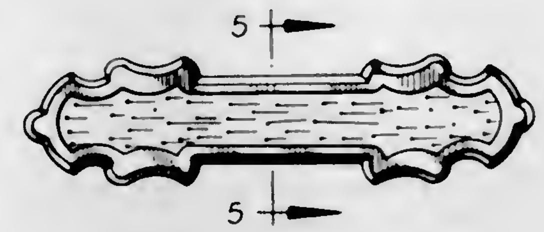

211,962
HOUSING FOR AUTOMATIC AEROSOL DISPENSER
William L. Soles, Toronto, Ontario, Canada, assignor to Air Guard Control of Canada Limited, Toronto, Ontario, Canada
Filed Sept. 2, 1966, Ser. No. 3,694
Term of patent 14 years
(Cl. D52—2)

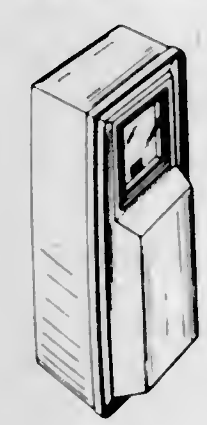

211,963
AIR HAMMER TOOL PIECE
George O. Fortenberry, 6323 Moonglow Drive, Dallas, Tex. 75241
Filed Apr. 13, 1965, Ser. No. 84,759
Term of patent 14 years
(Cl. D54—14)

211,964
JINGLE STICK
Michael J. Valente, 116 Harding Terrace, Dedham, Mass. 02026
Filed Jan. 9, 1967, Ser. No. 5,341
Term of patent 14 years
(Cl. D56—1)

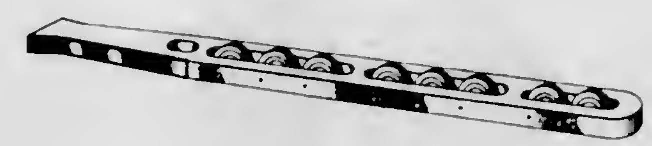

211,965
COMBINED RADIO, PHONOGRAPH AND TELEVISION CABINET OR SIMILAR ARTICLE
John C. Kopf, New York, N.Y., assignor to Andrea Radio Corporation, Long Island City, N.Y., a corporation of New York
Filed June 5, 1967, Ser. No. 7,362
Term of patent 14 years
(Cl. D56—4)

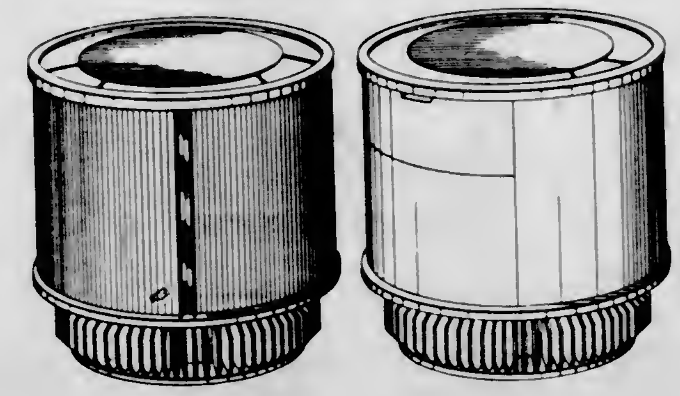

211,966
PAIR OF SUNGLASSES
Kikuo Hayashi, 2119½ Hoagland Ave., Fort Wayne, Ind. 46804
Filed May 11, 1967, Ser. No. 7,066
Term of patent 14 years
(Cl. D57—1)

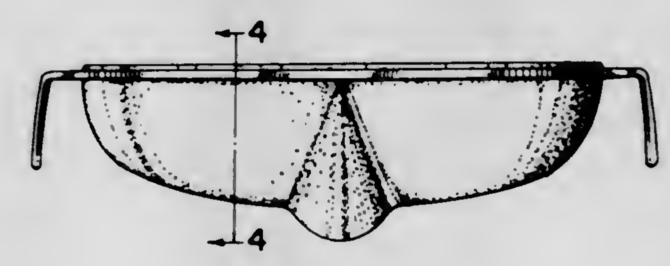

211,967
SUNGLASS FRONT
Atherton R. Mitchell, San Francisco, Calif., assignor to Renauld International, Ltd., Fitchburg, Mass., a corporation of Delaware
Filed Oct. 5, 1967, Ser. No. 8,869
Term of patent 14 years
(Cl. D57—1)

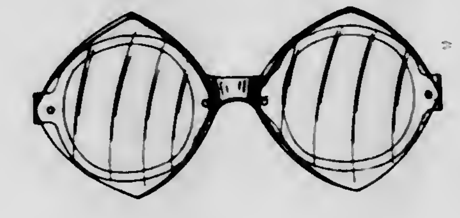

211,968
SUNGLASS FRONT
Atherton R. Mitchell, San Francisco, Calif., assignor to Renauld International, Ltd., Fitchburg, Mass., a corporation of Delaware
Filed Oct. 5, 1967, Ser. No. 8,871
Term of patent 14 years
(Cl. D57—1)

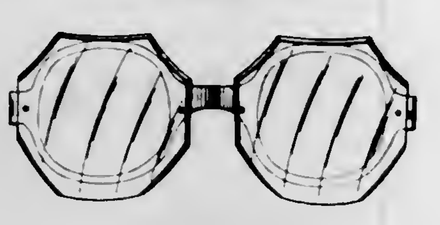

211,969
FACE PLATE FOR A PHOTOGRAPHIC CAMERA OR SIMILAR ARTICLE
Andrew V. McClare, Rochester, N.Y., assignor to Eastman Kodak Company, Rochester, N.Y., a corporation of New Jersey
Filed Dec. 26, 1967, Ser. No. 9,921
Term of patent 14 years
(Cl. D61—1)

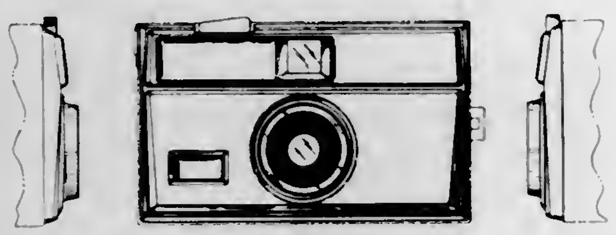

211,970
COMBINED STORAGE COMPARTMENT, FREEZER CHEST, AND BAKING OVEN FOR USE IN PROCESSING COMESTIBLES, SUCH AS PRETZELS, PIZZA PIES AND THE LIKE
Walter R. Reach, 588 Washington Terrace, Audubon, N.J. 08106
Filed May 19, 1967, Ser. No. 7,195
Term of patent 7 years
(Cl. D67—3)

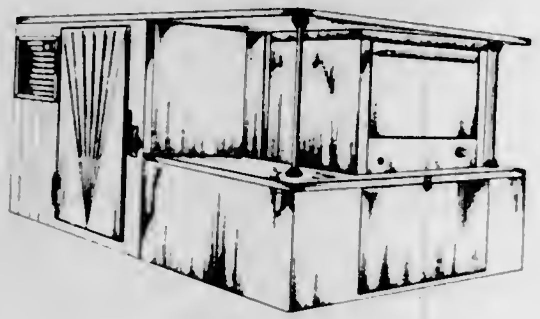

211,971
BOATHOOK
George A. Lasko, 1367 Vulcan St., El Cajon, Calif. 92021
Filed Mar. 23, 1967, Ser. No. 6,361
Term of patent 14 years
(Cl. D71—1)

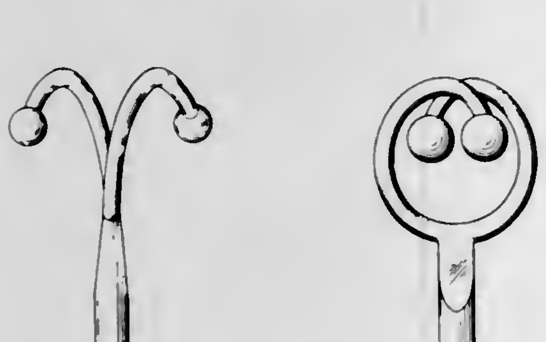

211,972
DISPLAY STAND FOR DISHES AND THE LIKE
Eirvan C. Cantrell, 1801 W. Anaheim St., Long Beach, Calif. 90813
Filed Apr. 24, 1967, Ser. No. 6,789
Term of patent 14 years
(Cl. D80—9)

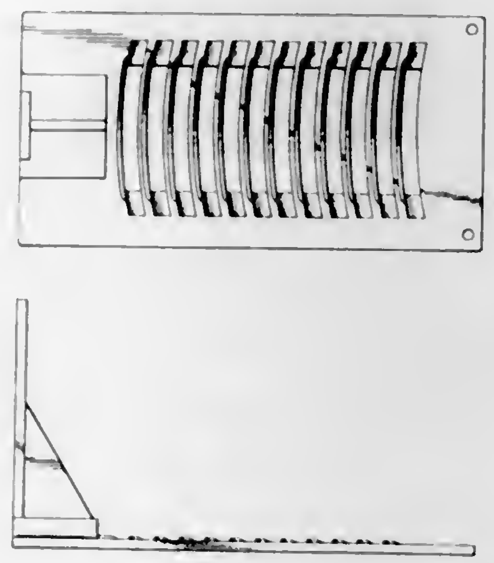

211,973
STERILIZER FOR BARBER TOOLS
Byron C. Eppler, 1318 S. Cherry, Ada, Okla. 74820
Filed Sept. 8, 1967, Ser. No. 8,527
Term of patent 14 years
(Cl. D83—1)

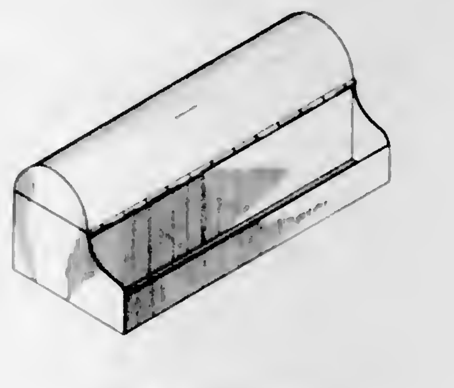

211,974
CONTAINER FOR A TAPE REEL OR SIMILAR ARTICLE
Carl J. Norby and John V. Stram, Boulder, and Jack W. Stringer, Hygiene, Colo., assignors to International Business Machines Corporation, Armonk, N.Y., a corporation of New York
Filed July 12, 1967, Ser. No. 7,770
Term of patent 14 years
(Cl. D87—1)

LIST OF REISSUE PATENTEES

TO WHOM

PATENTS WERE ISSUED ON THE 13TH DAY OF AUGUST, 1968

NOTE—Arranged in accordance with the first significant character or word of the name (in accordance with city and telephone directory practice).

Bethlehem Steel Corp.: *See*—
Poole, William D. Re. 26,441.
Case, J. I., Co.: *See*—
Long, Elton B. Re. 26,439.
Crane Co.: *See*—
White, Howard T. Re. 26,438.
D & M Equipment Co., The: *See*—
Dunbar, Glenn G. Re. 26,442.
Dunbar, Glenn G., to The D & M Equipment Co. Hoisting fork. Re. 26,442, 8–13–68, Cl. 294—67.
Long, Elton B., to J. I. Case Co. Hydraulic apparatus for locking a side shiftable excavator. Re. 26,439, 8–13–68, Cl. 280—456.
Loveland, Winton, and S. Warshaw, to The Loveshaw Corp. Automatic carton closing machine. Re. 26,440, 8–13–68, Cl. 53—75.
Loveshaw Corp., The: *See*—
Loveland, Winton, and Warshaw. Re. 26,440.
Poole, William D., to Bethlehem Steel Corp. Method of producing rimmed steel. Re. 26,441, 8–13–68, Cl. 75—56.
Warshaw, Saul: *See*—
Loveland, Winton, and Warshaw. Re. 26,440.
White, Howard T., to Crane Co. Motor driven pump. Re. 26,438, 8–13–68, Cl. 103—87.

LIST OF DESIGN PATENTEES

AAI Corp.: *See*—
Barr, Irwin R. 211,941.
Air Guard Control of Canada Ltd.: *See*—
Soles, William L. 211,962.
Aleks, Vytant P., to National Lock Co. Pull or the like. 211,939, 8–13–68, Cl. D10—8.
Aleks, Vytant P., to National Lock Co. Ball pull or the like. 211,940, 8–13–68, Cl. D10—8.
Algoren, Lionel C., to National Lock Co. Knob or the like. 211,935, 8–13–68, Cl. D10—8.
Algoren, Lionel C., to National Lock Co. Ball pull or the like. 211,936, 8–13–68, Cl. D10—8.
Algoren, Lionel C., to National Lock Co. Backplate or the like. 211,937, 8–13–68, Cl D10—8
Algoren, Lionel C., to National Lock Co. Pull or the like. 211,938, 8–13–68, Cl. D10—8.
Andrea Radio Corp.: *See*—
Kopf, John C. 211,965.
Barr, Irwin R., to AAI Corp. Armored vehicle. 211,941, 8–13–68, Cl. D14—3.
Beinert, John D., to International Patent Research Corp. Lawn sprinkler. 211,943, 8–13–68, Cl. D23—7.
Bloomingdale, Paul F.: *See*—
Cooper, Robert R., and Bloomingdale. 211,944.
Brace, Robert S., and E. L. Robinson, Jr., to International Harvester Co. Cotton harvester. 211,959, 8–13–68, Cl. D40—1.
Brandell, John R Golf club head. 211,955, 8–13–68, Cl. D34—5.
Burnett, Robert R., to Xerox Corp. Bottle. 211,928, 8–13–68, Cl. D9—44.
Cantrell, Eirvan C. Display stand for dishes and the like. 211,972, 8–13–68, Cl. D80—9.
Christie, William G. Club holder for a golf bag. 211,956, 8–13–68, Cl. D34—5.
Coleman Co., Inc., The: *See*—
Cooper, Robert R., and Bloomingdale. 211,944.
Cooper, Robert R., and P. F. Bloomingdale, to The Coleman Co., Inc. Mounting plate for trailer furnace 211,944, 8–13–68, Cl. D23—115.
Defensor AG.: *See*—
Stoop, Hans R., and Flury. 211,945.
Flury, Karl. 211,946.
Derenski, Frank W. Box cover or similar article. 211,934, 8–13–68, Cl. D9—254.
Dow Chemical Co., The: *See*—
Eicholtz, Clara V., and Trombley. 211,931.
Driscoll, Neil J. Push button control station. 211,950, 8–13–68, Cl. D26—13.
Driver, William J.: *See*—
Thomson, George, and Driver. 211,951.
Eastman Kodak Co.: *See*—
McClare, Andrew V. 211,969.
Eicholtz, Clara V., and B. N. Trombley, to The Dow Chemical Co. Bottle. 211,931, 8–13–68, Cl. D9—100.
Eppler, Byron C. Sterilizer for barber tools. 211,973, 8–13–68, Cl. D83—1.
Ettinger, James P., and C. S. Otteson. Modular power supply. 211,952, 8–13–68, Cl. D26—15.
Flury, Karl: *See*—
Stoop, Hans R., and Flury. 211,945.
Flury, Karl, to Defensor AG. Humidifier. 211,946, 8–13–68, Cl. D23—146.
Fortenberry, George O. Air hammer tool piece. 211,963, 8–13–68, Cl. D54—14.
Furuzawa, Masaru: *See*—
Matsuyoshi, Masaya, Furuzawa, Sughihara, and Shimoyama. 211,947.
Gandelman, Morris D., to Jacoby-Bender, Inc. Link chain for a bracelet or the like. 211,960, 8–13–68, Cl. D45—4.
General Dynamics Corp.: *See*—
Worral, Burton W. 211,948.
Hayashi, Kikuo. Pair of sunglasses. 211,966, 8–13–68, Cl. D57—1.
Hern, Geoffrey B. Building brick. 211,942, 8–13–68, Cl. 18—2.
Hesston Corp., Inc.: *See*—
Long, William D., and Ten Eyck. 211,958.
Horne, Willard R., to Johnson & Johnson. Dispensing container for powder or the like. 211,933, 8–13–68, Cl. D9—144.
ITT Blackburn Corp.: *See*—
Toedtman, John A. 211,949.
International Business Machines Corp.: *See*—
Norby, Carl J., Stram, and Stringer. 211,974.
International Harvester Co.: *See*—
Brace, Robert S., and Robinson. 211,959.
International Patent Research Corp.: *See*—
Beinert, John D. 211,943.
Ischinger, Alfred E. Game device or the like. 211,954, 8–13–68, Cl. D34—5.
Jacoby-Bender, Inc.: *See*—
Gandelman, Morris D. 211,960.
Johnson & Johnson: *See*—
Horne, Willard R. 211,933.
Kelly, John M., to The Sinclair Mfg. Co. Bottle or the like. 211,926, 8–13–68, Cl. D9—32.
Kopf, John C., to Andrea Radio Corp. Combined radio, phonograph and television cabinet or similar article. 211,965, 8–13–68, Cl. D56—4.
Lasko, George A. Boathook. 211,971, 8–13–68, Cl. D71—1.
Long, William D., and R. E. Ten Eyck, to Hesston Corp., Inc. Pull-type windrower. 211,958, 8–13–68, Cl. D40—1.
Matsushita Electric Industrial Co., Ltd.: *See*—
Matsuyoshi, Masaya, Furuzawa, Sughihara, and Shimoyama. 211,947.
Matsushita Seiko Co., Ltd.: *See*—
Matsuyoshi, Masaya, Furuzawa, Sughihara, and Shimoyama. 211,947.
Matsuyoshi, Masaya, M. Furuzawa, T. Sughihara, and K. Shimoyama, to Matsushita Electric Industrial Co., Ltd. and Matsushita Seiko Co., Ltd. Air circulator. 211,947, 8–13–68, Cl. D23—156.
McClare, Andrew V., to Eastman Kodak Co. Face plate for a photographic camera or similar article. 211,969, 8–13–68, Cl. D61—1.
Mitchell, Atherton R., to Renauld International, Ltd. Sunglass front. 211,967, 8–13–68, Cl. D57—1.
Mitchell, Atherton R., to Renauld International, Ltd. Sunglass front. 211,968, 8–13–68, Cl. D57—1.
National Lock Co.: *See*—
Aleks, Vytant P. 211,939.
Aleks, Vytant P. 211,940.
Algoren, Lionel C. 211,935.
Algoren, Lionel C. 211,936.
Algoren, Lionel C. 211,937.
Algoren, Lionel C. 211,938.
Sonnenleiter, George R. 211,961.
Norby, Carl J., J. V. Stram, and J. W. Stringer, to International Business Machines Corp. Container for a tape reel or similar article. 211,974, 8–13–68, Cl. D87—1.
Northern Electric Co., Ltd.: *See*—
Thomson, George, and Driver. 211,951.
Otteson, Christian S.: *See*—
Ettinger, James P., and Otteson. 211,952.
Owen-Illinois, Inc.: *See*—
Plummer, James E. 211,932.
Penniman, Richard E., to Safeguard Products Corp. Window planter. 211,957, 8–13–68, Cl. D35—3.
Phelan, John J., to Schenley Industries, Inc. Jug. 211,927, 8–13–68, Cl. D9—41.
Phillips Petroleum Co.: *See*—
Shutt, Melvin S. 211,930.
Plummer, James E., to Owen-Illinois, Inc. Jar. 211,932, 8–13–68, Cl. D9—105.
Reach, Walter R. Combined storage compartment, freezer chest, and baking oven for use in processing comestibles, such as pretzels, pizza pies and the like. 211,970, 8–13–68, Cl. D67—3.

Renauld International, Ltd. : *See—*
Mitchell, Atherton R. 211,967.
Mitchell, Atherton R. 211,968.
Richard, Antoine C. H., Tricotages Mecaniques Troyen. Briefs. 211,925, 8-13-68, Cl. D2—11.
Robinson, Edward L., Jr. : *See—*
Brace, Robert S., and Robinson. 211,959.
Safeguard Products Corp. : *See—*
Penniman, Richard E. 211,957.
Schenley Industries, Inc. : *See—*
Phelan, John J. 211,927.
Stone, Russell V. 211,929.
Shimoyama, Katsumi : *See—*
Matauyoshi, Masaya, Furuzawa, Sughihara, and Shimoyama. 211,947.
Shutt, Melvin S., to Phillips Petroleum Co. Combined bottle and cover therefor. 211,930, 8-13-68, Cl. D9—89.
Sinclair Mfg. Co., The : *See—*
Kelly, John M. 211,926.
Solea, William L., to Air Guard Control of Canada Ltd. Housing for automatic aerosol dispenser. 211,962, 8-13-68, Cl. D52—2.
Sonnenleiter, George R., to National Lock Co. Backplate or the like. 211,961, 8-13-68, Cl. D50—6.
Stone, Russell V., to Schenley Industries, Inc. Decanter. 211,929, 8-13-68, Cl. D9—72.
Stoop, Hans R., and K. Flury, to Defensor AG. Humidifier. 211,945, 8-13-68, Cl. D23—146.
Stram, John V. : *See—*
Norby, Carl J., Stram, and Stringer. 211,974.
Stringer, Jack W. : *See—*
Norby, Carl J., Stram, and Stringer. 211,974.
Sughihara, Takehiro : *See—*
Matsuyoshi, Masaya, Furuzawa, Sughihara, and Shimoyama. 211,947.
Ten Eyck, Richard E. : *See—*
Long, William D., and Ten Eyck. 211,958.
Thomson, George, and W. J. Driver, to Northern Electric Co., Ltd. Telephone headset. 211,951, 8-13-68, Cl. D26—14.
Toedtman, John A., to ITT Blackburn Corp. Electrical terminal block. 211,949, 8-13-68, Cl. D26—1.
Tricotages Mecaniques Troyen : *See—*
Richard, Antoine C. H. 211,925.
Trombley, Bertrand N. : *See—*
Eicholtz, Clara V., and Trombley. 211,931.
Valente, Michael J. Jingle stick. 211,964, 8-13-68, Cl. D56—1.
Whittaker, Willis J. Aquarium ornament or the like. 211,953, 8-13-68, Cl. D30—12.
Worral, Burton W., to General Dynamics Corp. Front panel of a housing for electronic equipment. 211,948, 8-13-68, Cl. D26—1.
Xerox Corp. : *See—*
Burnett, Robert R. 211,928.

LIST OF PATENTEES

TO WHOM

PATENTS WERE ISSUED ON THE 13TH DAY OF AUGUST, 1968

NOTE.—Arranged in accordance with the first significant character or word of the name (in accordance with city and telephone directory practice).

AB Penta : *See—*
Bergstedt, Karl A. 3,396,692.
Bergstedt, Karl A. 3,396,693.
AB Tetra Pak : *See—*
Rausing, Gad A. 3,397,101.
ACF Industries, Inc. : *See—*
Stevens, Eric S. 3,396,675.
AFA Corp. of Florida, The : *See—*
Malone, Carl E. 3,396,874.
AMP Inc. : *See—*
Gilissen, Hermanus P. J. 3,397,381.
Hahn, Paul T. 3,396,568.
Paullus, Clarence L., and Stauffer. 3,397,279.
Potter, Rossiter R. 3,397,377.
Shannon, Suel G., and Graeff. 3,396,839.
Aben, Pieter C., and H. W. Kouwenhoven, to Shell Oil Co. Process for the catalytic hydrogenation of aromatic hydrocarbons. 3,397,249, 8-13-68, Cl. 260—667.
Abex Corp. : *See—*
Mecum, William D. 3,397,187.
Abramson, Davis. Coat collar construction. 3,396,407, 8-13-68, Cl. 2—98.
Abramson, Paul, P. H. Chin, and G. R. Stilwell, Jr., to International Business Machines Corp. Matrix control circuit. 3,397,388, 8-13-68, Cl. 340—166.
Adams, Floyd N., V. D. Cooper, and J. E. Sommers, to DCA Food Industries, Inc. Shaped doughnut cutting device. 3,396,677, 8-13-68, Cl. 107—14.
Adams, George C., to Rollform, Inc. Fire rated ceiling grid system. 3,396,997, 8-13-68, Cl. 287—189.36.
Adams, John P. : *See—*
Kern, Joseph F., Desnoes, and Adams. 3,397,031.
Adamson, William G., R. A. Bonnell, and R. H. Feucht, to The Goodyear Tire & Rubber Co. Expandable adapter. 3,396,918, 8-13-68, Cl. 242—72.
Advertising Metal Display Co. : *See—*
Slaga, Case J. 3,396,932.
Aeroflex Laboratories Inc. : *See—*
Hickox, Walter A. 3,396,583.
Aerospace Systems Co. : *See—*
Kriesel, Marshall S. 3,396,924.
Agfa-Gevaert Aktiengesellschaft : *See—*
Fengler, Harald, Schausberger, and Kocourek. 3,396,964.
Air Preheater Co., Inc., The : *See—*
Rayburn, Walker H. 3,396,706.
Ajem Laboratories, Inc. : *See—*
Millhiser, Robert G., and Wooll. 3,396,844.
Akamatsu, Yasuka : *See—*
Furui, Shungo. 3,397,343.
Akhagen, Rune V. Device of inflaming large-bore propelling charge. 3,396,659, 8-13-68, Cl. 102—70.
Albemarle Paper Co. : *See—*
Kilgore, William E. 3,396,902.
Lepisto, John G. 3,396,638.
Alberto-Culver Co. : *See—*
Oppasser, Edward F. 3,396,866.
Alderfer, Sterling, Co. : *See—*
Alderfer, Sterling W. 3,396,773.
Alderfer, Sterling W., to Sterling Alderfer Co. Centrifugally cast wheel. 3,396,773, 8-13-68, Cl. 152—313.
Alfa-Laval AB : *See—*
Nilsson, Rutger E. V. 3,396,750.
Alholm, Wayne L., R. C. Boulton, and W. B. Harrison, to W. R. Grace & Co. Apparatus for lining gasket-forming compositions in closures. 3,396,698, 8-13-68, Cl. 118—318.
Allen, Chauncey D., to Natural Resources Corp. Portable combustion device for solid fuels. 3,396,715, 8-13-68, Cl. 126—25.
Allen, Frank M., to Barber-Greene Co. Bowl adjustment for crushers. 3,396,915, 8-13-68, Cl. 241—290.
Allen, Kenneth M. Lazy tong adjustable sorting machines. 3,396,843, 8-13-68, Cl. 209—104.
Allenden, Dennis, and T. T. Harrison, to Associated Electrical Industries Ltd. Rotating coil magnetometer with means to compensate for variations in rotational speed. 3,397,358, 8-13-68, Cl. 324—47.
Alles, Francis P., to E. I. du Pont de Nemours and Co. Magnetic recording tape with an asymmetrically oriented terephthalate polymer support. 3,397,072, 8-13-68, Cl. 117—7.
Allied Chemical Corp. : *See—*
Brownstein, Arthur M. 3,397,228.
Kushnick, Julian H., Mears, and Jones. 3,397,103.
Tetenbau, Marvin T. 3,397,185.
Allis-Chalmers Mfg. Co. : *See—*
Jennrich, George J., and Blann. 3,396,952.
Kemnitz, Robert H., and Winter. 3,396,916.
Murdock, James P., and Schroeder. 3,396,454.
Allmanna Svenska Elektriska Aktiebolaget : *See—*
Helsing, Erik, and Strom. 3,397,277.
Allseits, Frank, and J. Doblin, to P. Lorillard Co. Cigarette tip. 3,396,733, 8-13-68, Cl. 131—10.5.
Alm, Rasmus S. Adjustable light aperture, particularly a slit in a diaphragm in an optical system. 3,397,025, 8-13-68, Cl. 350—271.
Almin, Karl E. : *See—*
Kubat, Josef, Pattyranie, Wahrem, Almin, Andersson, and Johanson. 3,396,850.
Aloi, Alfred. Garment shaping bag with resilient inserts. 3,396,881, 8-13-68, Cl. 223—67.
Aloia, Romeo R., and S. Kaizerman, to American Cyanamid Co. Acrylic elastomer. 3,397,193, 8-13-68, Cl. 260—80.81.
Alsco, Inc. : *See—*
Nash, John J. 3,396,628.
Alsop, James F., and J. Maltby, to Davy and United Engineering Co. Ltd. Roll changing arrangement for rolling mills. 3,396,566, 8-13-68, Cl. 72—239.
Altmann, Werner E., to Daimler-Benz Aktiengesellschaft. Steering column for vehicles. 3,396,599, 8-13-68, Cl. 74—492.
Amchem Products, Inc. : *See—*
Beatty, Robert H. 3,397,049.
American Chemical & Refining Co., Inc. : *See—*
Camp, Eldridge K. 3,397,127.
American Cyanamid Co. : *See—*
Aloia, Romeo R., and Kaizerman. 3,397,193.
Clapp, James W. 3,397,274.
Dorion, George H., Nachtigall, and Cerreta. 3,397,059.
Merryweather, John P., McLean, and Field. 3,397,095.
Mosby, William L., and Klingsberg. 3,397,217.
Richter, Ferdinand J., and Granowitz. 3,396,419.
Roberts, George L., Jr., Bragg, and Whately. 3,397,037.
Sedlak, John A., and Matsuda. 3,397,180.
Spitzer, Donald P. 3,397,043.
Torley, Robert E., and Sprague. 3,397,186.
Winterbottom, Robert, Bitha, and Kissman. 3,397,230.
American Engineering Co., Ltd. : *See—*
Donche-Gay, Pierre. 3,396,759.
American Felt Co. : *See—*
Fraser, Redmond P., Jr., and Woodward. 3,396,970.
American Optical Co. : *See—*
Cole, Henry B. 3,397,022.
Metcalfe, Richard T. 3,396,425.
American Standard Inc. : *See—*
Arnold, Alanson J., B. Van Dyke, D. Van Dyke, and Porter. 3,397 259.
Heskestad, Gunnar. 3,396,738.
Kozel, James A. 3 396 848.,
Okress, Ernest C. 3,396,662.
Woodward, Gary F. 3,397,352.
Amran et Fils S.A.R.L. : *See—*
Genin, Robert. 3,396,478.
Amsted Industries, Inc. : *See—*
Livelsberger, Kenneth W., and Kulieke. 3,396,673.
Maloney, Bernard. 3,397,291.
Simanek, Edward J., and Martini. 3,396,823.
Anaconda Wire and Cable Co. : *See—*
Beebe, Norman P., Wase, and Stone. 3,396,699.
Anderson, Hubert D. Floor support and drain for an oil heater. 3,396,718, 8-13-68, Cl. 126—278.
Anderson, Joseph W. : *See—*
Holloway, Joseph H., and Anderson. 3,397,310.
Anderson, Phillip J. : *See—*
Khan, Amanullah R., Eakin, and Anderson. 3 396,539.
Anderson, Ronald A., and G. H. Pardue, to Schlumberger Technology Corp. Descent-facilitating apparatus for well tools. 3,396,799, 8-13-68, Cl. 166—243.
Anderson, William J., to North American Rockwell Corp. Silicon-containing diffusion coating for ferrous metals. 3,397,078, 8-13-68, Cl. 117—114.
Anderson, Wilmer C., to General Time Corp. Apparatus for measuring static forces dynamically. 3,396,576, 8-13-68, Cl. 73—89.
Andersson, Olle : *See—*
Kubat, Josef, Pattyranie, Wahrem, Almin, Andersson and Johanson. 3,396,850.
Andrews, Peter. Surface, material and health protective device. 3,396,810, 8-13-68, Cl. 180—69.1.
Angus, George & Co., Ltd. : *See—*
Balkin, Mark, Turner, and Irving. 3,396,978.
Balkin, Mark, Turner, and Irving. 3,396,979.
Annis, James R., Jr., to Signode Corp. Reversible feed wheel mechanism for power strapping machines. 3,396,889, 8-13-68, Cl. 226—143.
Ansell, Harvey N., to Rubber Products Development Proprietary Ltd. Method of the manufacture of thin-walled articles of rubber or the like. 3,397,265, 8-13-68, Cl. 264—306.
Appell, Herbert R., to Koppers Co., Inc. Method of making diacyl peroxides. 3,397,245, 8-13-68, Cl. 260—610.
Applied Power Industries, Inc. : *See—*
Sessody, Donald W. 3,396,637.
Arenco Aktiebolag : *See—*
Jansson, Carl R. 3,396,734.

Armour and Co.: *See*—
  Brown, Louise H., and Swidler. 3,397,152.
Armstrong Cork Co.: *See*—
  Hager, Nathaniel E., Jr. 3,397,301.
Arnold, Alanson J., B. and D. Van Dyke, and D. D. Porter, to American Standard Inc. Method for casting articles. 3,397,259, 8-13-68, Cl. 264—86.
Arrance, Frank C.: *See*—
  Berger, Carl, and Arrance. 3,397,088.
Artichoke Industries, Inc.: *See*—
  Perkins, Granville W. 3,396,766.
Arvin Industries, Inc.: *See*—
  Wilcox, Richard, and Beaman. 3,396,812.
Ashland Oil & Refining Co.: *See*—
  Slagel, Robert C., and Tushaus. 3,397,175.
  Jackson, John E. 3,397,237.
  Coats, Carlton E., Graver, and Hudak. 3,397,255.
Associated Electrical Industries Ltd.: *See*—
  Allenden, Dennis, and Harrison. 3,397,358.
  Curran, John E. 3,397,296.
Astor, Edward E.: *See*—
  Sachs, Charles M., and Astor. 3,396,728.
Atadan, Erdem M., and C. H. Noren, to E. I. Du Pont de Nemours and Co. Thickened aqueous inorganic oxidizer salt blasting compositions containing gas bubbles and a crystal habit modifier and method of preparation. 3,397,097, 8-13-68, Cl. 149—46.
Atlas Tool & Mfg. Co.: *See*—
  Kortum, Robert E. 3,396,809.
Atomic Energy of Canada Ltd.: *See*—
  McCorry, Arthur E. 3,397,297.
Aubert, Jean, to Societe Anonyme dite: Societe Generale de Traction et d'Exploitations. Means for effecting vessel movement in a canal and lock 3,396,540, 8-13-68, Cl. 61—8.
Auer, John H., Jr., to The General Signal Corp. Method and apparatus for measuring vehicular traffic. 3,397,304, 8-13-68, Cl. 235—150.24.
Auer John H. Jr., to The General Signal Corp. Apparatus for measuring vehicular traffic lane occupancy. 3,397,305, 8-13-68, Cl. 235—150.24.
Auer, John H., Jr., to General Signal Corp. Apparatus for updating running average of measured traffic parameter. 3,397,306, 8-13-68, Cl. 235—150.24.
Austin Concrete Works, Inc.: *See*—
  Robinson, Harold G. 3,396,441.
Austin, James: *See*—
  Narins, Arthur P., Austin, Ellis, and Conners. 3,397,036.
Avco Corp.: *See*—
  Burkhard, Kurt. 3,397,331.
  Fine, Laughton T., Dennis, and Bay. 3,397,324.
Ayres, Ralph E., to Dow Chemical Co. Method and apparatus for the injection molding of elongate cylindrical articles. 3,397,266, 8-13-68, Cl. 264—328.
Ayrshire Collieries Corp.: *See*—
  Pearce, Edwin S. 3,397,018.
Babcock Electronics Corp.: *See*—
  Dutton, Oscar B., and Petry. 3,397,398.
Babcock & Wilcox Ltd.: *See*—
  Bagley, Roy, and Evans. 3,396,707.
  Deighton, Thomas. 3,397,114.
  Humphreys, John. 3,396,513.
Babcock & Wilcox Co., The: *See*—
  Hurst, Thomas B., and Winklepleck. 3,396,514.
Bachmann, Horst, to Maschinenfabrik Hasenclever A.G. Apparatus for the heading of conductive workpieces. 3,396,567, 8-13-68, Cl. 72—318.
Backhaus, Karl H.: *See*—
  Joseph, Charles W., Jr., and Backhaus. 3,396,527.
Bacon American Corp.: *See*—
  Barefoot, Carlton K. 3,397,099.
Bacon, Kenneth H., to Warren Petroleum Corp. Gas separation employing work expansion of feed and fractionator overhead. 3,397,138, 8-13-68, Cl. 208—340.
Bade, Heinz E. Compressed air-operated drive-in apparatus to drive-in fasteners, for instance, nails, staples or the like. 3,396,636, 8-13-68, Cl. 91—399.
Bade, Rudolf, to W. R. Grace & Co. Vacuum control for moving sheets. 3,396,887, 8-13-68, Cl. 226—1.
Bader, Erich: *See*—
  Schuler, Wilhelm A., Bader, Rink, and Weigert. 3,397,172.
Badin, Frank E., and F. D. Farnsworth, to National Aeronautics & Space Administration. Space simulation and radiative property testing system and method. 3,396,584, 8-13-68, Cl. 73—432.
Bagley, Roy, and R. H. Evans, to Babcock & Wilcox Ltd. Gas passes. 3,396,707, 8-13-68, Cl. 122—510.
Baits, Stephen S., to Sundstrand Corp. Hydraulic pump or motor. 3,396,670, 8-13-68, Cl. 103—162.
Baker, J. E., Co., The: *See*—
  Paul, Robert A., and Forchheimer. 3,397,070.
  Paul, Robert A., and Shepherd. 3,397,256.
Baker, Silveus M., and R. W. Smiley, to Royal Industries, Inc. Load handling apparatus having retractable stabilizing arm. 3,396,858, 8-13-68, Cl. 214—38.
Bakula, Robert G.: *See*—
  Balogh, Roy O., and Bakula. 3,396,852.
Balamuth, Lewis, to Cavitron Corp. Ultrasonic motor system. 3,396,892, 8-13-68, Cl. 228—1.
Balkin, Mark, D. G. Turner, and K. Irving, to George Angus & Co., Ltd. Shaft seals. 3,396,978, 8-13-68, Cl. 277—153.
Balkin, Mark, D. G. Turner, and K. Irving, to George Angus & Co., Ltd. Shaft seals. 3,396,979, 8-13-68, Cl. 277—153.
Ballard, Wade E., to Menardi & Co. Baghouse apparatus. 3,396,516, 8-13-68, Cl. 55—302.
Ballbe, Mariano, to Magin Deaveus Duran. Weft stop motion for looms. 3,396,757, 8-13-68, Cl. 139—370.
Balogh, John, to Deerpark Machine Co. Corona treating apparatus having an electrode with an adjustable width. 3,397,136, 8-13-68, Cl. 204—312.
Balogh, Roy O., and R. G. Bakula, to McCabe-Powers Body Co. Derrick units. 3,396,852, 8-13-68, Cl. 212—35.
Bang, Mogens W., to Stackpole Carbon Co. Two-piece potentiometer. 3,397,374, 8-13-68, Cl. 338—162.
Banks, Bradford H., ½ to A. C. Litteer. Mobile mixer and paver. 3,396,644, 8-13-68, Cl. 94—40.
Barben, Ian K., and D. Eckersley, to Imperial Chemical Industries Ltd. Water-soluble reactive anthraquinone dyestuffs, their preparation and use. 3,397,207, 8-13-68, Cl. 260—249.
Barber-Greene Co.: *See*—
  Allen, Frank M. 3,396,915.
Barefoot, Carlton K., to Bacon American Corp. Method and apparatus for rebuilding tires. 3,397,099, 8-13-68, Cl. 156—96.
Barnaby, Bernard S., P. W. Ward, and P. H. Morcombe, to The General Electric Co. Ltd. Electromagnetic relays. 3,397,371, 8-13-68, Cl. 335—112.
Barnes Engineering Co.: *See*—
  Weiner, Seymour L. 3,397,314.
Barney, George M., to Texas Instruments Inc. Terrain-following radar. 3,397,397, 8-13-68, Cl. 343—7.
Bartfai, John J., to General Electric Co. Photoconductive composition and coated article. 3,397,086, 8-13-68, Cl. 117—218.
Basic Products Corp.: *See*—
  Martinek, Robert G. 3,396,955.
Baskins, Douglas L.: *See*—
  Kruse, Frederick W., Jr., and Baskins. 3,397,365.
Bates, Marcus L. Apparatus for communicating service lines to mains. 3,396,745, 8-13-68, Cl. 137—317.
Batley-Janss Enterprises: *See*—
  Eaves, Raymond O. 3,396,476.
Batista, Jose H. Flexible shoehorn. 3,396,883, 8-13-68, Cl. 223—118.
Bauer, Gustav, KG: *See*—
  Herzog, Hillmar. 3,396,884.
Baumeister, Frank J.: *See*—
  Casper, Richard L., and Baumeister. 3,397,375.
Baxter, Allan S., J. F. Warriner, and P. M. Jeffery, to Ruston & Hornsby Ltd. Lubrication of connecting rod big-end bearings. 3,396,819, 8-13-68, Cl. 184—6.
Bay, Gerald B.: *See*—
  Fine, Laughton T., Dennis, and Bay. 3,397,324.
Bayer, Helmut: *See*—
  Von Bethmann, Max F., Lipp, and Bayer. 3,396,735.
Bayerisches Leichtmetallwerk Graf Blucher Von Wahlstatt KG: *See*—
  Schorp, Georg. 3,396,591.
Beaman, J. Alson: *See*—
  Wilcox, Richard, and Beaman. 3,396,812.
Beatty, Robert H., to Amchem Products, Inc. Method of controlling mesquite. 3,397,049, 8-13-68, Cl. 71—84.
Beaver, William L., and T. R. Mullen, to Varian Associates. Band edge oscillation suppression techniques for high frequency electron discharge devices incorporating slow wave circuits. 3,397,339, 8-13-68, Cl. 315—3.5.
Beck, Ralph A., to Beloit Corp. Flat sided stream flow valve. 3,396,742, 8-13-68, Cl. 137—219.
Becker, Ralph B. Lens turner for high vacuum evaporators. 3,396,696, 8-13-68, Cl. 118—49.
Beckerbauer, Richard, to E. I. du Pont de Nemours and Co. Fluorocarbon ethers. 3,397,191, 8-13-68, Cl. 260—80.3.
Beebe, Norman P., I. W. Wase, Jr., and D. G. Stone, to Anaconda Wire and Cable Co. Continuous coating apparatus. 3,396,699, 8-13-68, Cl. 118—634.
Begley, John W., and R. M. Marsheck, to Phillips Petroleum Co. Production of unsaturated monofluorides. 3,397,247, 8-13-68, Cl. 260—653.4.
Beiswanger, John P. G.: *See*—
  Stefcik, Andrew, and Beiswanger. 3,397,051.
Belden Corp.: *See*—
  Prifogle, John S., and Vail. 3,397,383.
Bell & Howell Co.: *See*—
  Davidson, Richard M. 3,396,589.
  Smith, Edwin L. 3,397,303.
Bell Telephone Laboratories, Inc.: *See*—
  Bishop John D. 3,397,366.
Bell, William T., to Schlumberger Technology Corp. Depth control methods and apparatus. 3,396,788, 8-13-68, Cl. 166—4.
Bell, William T.: *See*—
  Schuster, Nick A., and Bell. 3,396,786.
Bellos, Thomas J.: *See*—
  Lissant, Kenneth J., and Bellos. 3,396,537.
Beloit Corp.: *See*—
  Beck, Ralph A. 3,396,742.
Bender, Alfred, to Alfred Teves, Firma. Two-position valve. 3,396,751, 8-13-68, Cl. 137—625.65.
Benson, Glendon M., to Physics International Co. Thermal underground penetrator. 3,396,806, 8-13-68, Cl. 175—11.
Berardinelli, Frank M.: *See*—
  Halek, George W., and Berardinelli. 3,397,181.
Berger, Carl, and F. C. Arrance, to Douglas McDonnell Corp. Battery including inorganic fibrous material. 3,397,088, 8-13-68, Cl. 136—6.
Bergmann, Adolph G.: *See*—
  Spooner, Howard E., and Bergmann. 3,396,461.
Bergstedt, Karl A., to AB penta. Drive arrangement for motor boats. 3,396,692, 8-13-68, Cl. 115—35.
Bergstedt, Karl A., to AB Penta. Pipe connection with seal for outboard boat drive unit. 3,396,693, 8-13-68, Cl. 115—41.

Berlin, Abe. Hosiery-removal device. 3,396,882, 8-13-68, Cl. 223—111.
Berman, Harold, and F. F. Ebetino, to The Norwich Pharmacal Co. Method for preparing 4-hydroxy-6,7-dialkoxy-3-carboalkoxyquinolines and novel 4-chloro-6,7-dialkoxy-3-carboalkoxyquinolines useful therein. 3,397,208, 8-13-68, Cl. 260—287.
Berman, Merril, to Harrworth, Inc. Apparatus for adjusting the natural frequency of rotating equipment. 3,396,665, 8-13-68, Cl. 103—87.
Bernson, Elmer R., and H. W. Engel, to Caterpillar Tractor Co. Air impingement nozzle arrangement for a turbocharger compressor and an improved method of employing air impingement. 3,396,534, 8-13-68, Cl. 60—13.
Berry, James S., Jr.: *See*—
  Richards, Nolan E., and Berry. 3,396,494.
Bernstein, Herbert: *See*—
  Greidinger, Dahlia S., Bernstein, and Epstein. 3,397,198.
Beteiligungs- und Patentverwaltungsgesellschaft mit Beschrankter Haftung: *See*—
  Maatsch, Jurgen, and Borowski. 3,396,960.
  Sixel, Gustav-Adolf. 3,397,276.
Bethlehem Steel Corp.: *See*—
  Osterholtz, Carl E., and Derkacz. 3,396,877.
  Ritterhoff, Charles W., and Romerll. 3,396,564.
Bezlaj, Frank A., and J. J. Panko. 3,396,603, 8-13-68, Cl. 74—506.
Biagini, Albert A. Stranding machine. 3,396,522, 8-13-68, Cl. 57—15.
Bibun Machine Construction Co., Ltd.: *See*—
  Kurihara, Shinji. 3,396,768.
Bick, Gerald J., and W. J. Kirkbride, to Owens-Illinois, Inc. Fiberboard carton. 3,396,897, 8-13-68, Cl. 229—32.
Bieser, Carl O. Corn Buttering device. 3,396,697, 8-13-68, Cl. 118—76.
Biet, Jean-Pierre, and C. Dufour, to Compagnie Generale Electricite. Delay line having a thermoelectric generator responsive to rate of heat transfer. 3,397,370, 8-13-68, Cl. 333—29.
Biffani, Raffaele. Structural members for building construction. 3,396,499, 8-13-68, Cl. 52—127.
Biland, Hans R.: *See*—
  Luethi, Christian, Biland, and Duennenberger. 3,397,205.
Bilson, Frank L., and R. F. Isted, to Jack The Yeoman Sales Ltd. Hypodermic darts. 3,396,660, 8-13-68, Cl. 102—92.
Biotec Aktiebolag: *See*—
  Heden, Carl-Goran. 3,396,947.
Bishop, Donald R., and R. T. Sullivan, to Polaroid Corp. Photographic mounting and conversion device. 3,396,649, 8-13-68, Cl. 95—86.
Bishop, John D., to Bell Telephone Laboratories, Inc. Inverter starting circuit. 3,397,366, 8-13-68, Cl. 331—113.
Bishup, Bernard W., A. A. Repeta, and F. C. Giarrizzo, to Leeds & Northrup Co. Telemetering and supervisory control system having normally continuous telemetering signals. 3,397,386, 8-13-68, Cl. 340—163.
Bitha Panayota: *See*—
  Winterbottom, Robert, Bitha, and Kissman. 3,397,230.
Black and Decker Mfg. Co., The: *See*—
  Moores, Robert G., Jr. 3,396,557.
  Moores, Robert G., Jr. 3,396,593.
Black Products Co.: *See*—
  Van Pernis, John M. 3,396,763.
Black, Sivalls & Bryson, Inc.: *See*—
  McMinn, Robert E., and Dougherty. 3,396,512.
Blann, William A.: *See*—
  Jennrich George J., and Blann. 3,396,952.
Blanshine, Allison W., C. M. Kline, C. K. Focht, and R. E. Wallin, to Sperry Rand Corp. Corn cob shredding rollers. 3,396,767, 8-13-68, Cl. 146—71.
Blatchford, John K., to Whirlpool Corp. Disposer for combustible and metal refuse. 3,396,682, 8-13-68, Cl. 110—18.
Bloom, William, and E. M. Kelly, to Miner Industries Inc. Case insert for the storage and carrying of hair falls. 3,396,-832, 8-13-68, Cl. 206—8.
Blubaugh, Otto J., to Jeffrey Galion Mfg. Co. Calibration of belt conveyor scales. 3,396,573. 8-13-68, Cl. 73—1.
Blueberry Equipment, Inc.: *See*—
  McKibben, Horace E., and Jones. 3,396,521.
Bode, Hans, and M. Jung, to VARTA Aktiengesellschaft. Process of electrochemically producing amines. 3,397,128, 8-13-68, Cl. 204—72.
Boeing Co., The: *See*—
  Sarri, John M., Schoen, and Dayton. 3,397,311.
Bogossian, Armen: *See*—
  Mackal, Henry H., and Bogossian. 3,396,743.
Boller, Ernest R.: *See*—
  Boller, Ernest R., and Snider. 3,397,077.
Boller, Ernest R., and G. E. Snider, to E. R. Boller. Metal finishing process and composition therefor. 3,397,077, 8-13-68, Cl. 117—75.
Bolton, Anthony P.: *See*—
  Pickert, Paul E., and Bolton. 3,397,137.
Bomar, Horace L.: *See*—
  Nichols, Edward C., and Guindon. 3,396,755.
Bonnell, Rollin A.: *See*—
  Adamson, William G., Bonnell, and Feucht. 3,396,918.
Borden Co., The: *See*—
  Matz, Samuel A. 3,397,064.
Bordenca, Carl, and J. M. Derfer, to SCM Corp. Method of killing plants. 3,397,053, 8-13-68, Cl. 71—98.
Borer, Herbert W., F. J. Profit, and J. W. White, to Caterpillar Tractor Co. Latch means for loader lift arm support. 3,396,863, 8-13-68, Cl. 214—776.
Borg-Warner Corp.: *See*—
  Moochhala, Yumus E., and Haas. 3,396,666.
  Rich, William M., Jr., and Flinn. 3,396,610.
Borowski, Kurt: *See*—
  Maatsch, Jurgen, and Borowski. 3,396,960.
Bosch, Robert, G.m.b.H.: *See*—
  Brantner, Andreas. 3,396,449.
Boschi, Antonio, and G. Martorana, to Societá Applicazioni Gomma Antivibranti "(SAGA)" S.p.A. Twin-joint for resilient transmission of torque. 3,396,555, 8-13-68, Cl. 64—14.
Boulton, Richard C.: *See*—
  Alholm, Wayne I., Boulton, and Harrison. 3,396,698.
Bouskill, Frederick M., deceased; St. Joseph Bank and Trust Co., and J. S. Bouskill, to J. S. Bouskill. Water conditioning system. 3,396,845, 8-13-68, Cl. 210—98.
Bouskill, June S.: *See*—
  Bouskill, Frederick M. 3,396,845.
Bourland, William L. Distillation and condensation system for converting salt water to fresh water. 3,397,116, 8-13-68, Cl. 202—177.
Bourland, William L. Salt water distillation and condensation utilizing alternate steam expansion-compression heat cycle to evaporate salt water. 3,397,119, 8-13-68, Cl. 203—11.
Boutonnet, Alexandre, to Societe Rhodiaceta. Yarn packaging and method of making. 3,396,835, 8-13-68, Cl. 206—46.
Bowaters United Kingdom Paper Co. Ltd.: *See*—
  Highton, Allan P., and Wheeldon. 3,397,112.
Bowden, George F., to Symons Mfg. Co. Multi-unit tie rod for a concrete wall form. 3,396,936, 8-13-68, Cl. 249—214.
Bowen, Eldred W., and J. A. McAfee, to Pet Inc. Container pressure testing apparatus. 3,396,842, 8-13-68, Cl. 209—73.
Bowers, Grover W., and F. H. Kennedy. Remote control for automobiles. 3,396,811, 8-13-68, Cl. 180—98.
Bowles, Romald E., and R. W. Warren. Fluid amplifier employing boundary layer effect. 3,396,619, 8-13-68, Cl. 83—639.
Boyden, James H., and M. Laikin, to Korad Corp. Optical prism for use in beam divergence reducing apparatus. 3,397,-024, 8-13-68, Cl. 350—199.
Boyden, James H.: *See*—
  Grayson, Lawrence P., and Boyden. 3,397,362.
Boyne Products, Inc.: *See*—
  Stol, Walter T. 3,397,294.
Brackett, Robert D., to Polaroid Corp. Measuring and comparator device. 3,396,577, 8-13-68, Cl. 73—141.
Bradshaw, John L.: *See*—
  Maclin, Ernest, and Bradshaw. 3,396,586.
Bragg, Horace A.: *See*—
  Roberts, George L., Jr., Bragg, and Whately. 3,397,037.
Brambilla, Giovanni, and D. Neri, to Snam Progetti S.p.A. Method of forming spheroids of particulate, agglomeration-resistant refractory metal oxides. 3,397,257, 8-13-68, Cl. 264—.5.
Brantley, Francis E., and C. Rampacek, to United States of America, Interior. Process for manganese recovery from leach solutions. 3,397,130, 8-13-68, Cl. 204—105.
Brantner, Andreas, to Robert Bosch G.m.b.H. Method of calibrating vacuum advance mechanisms for ignition distributors. 3,396,449, 8-13-68, Cl. 29—173.
Brasseur, Paul L.: *See*—
  Charles, Robert, and Brasseur. 3,397,182.
Bratten, Thomas A., to General Motors Corp. Liquid pump. 3,396,663, 8-13-68, Cl. 103—42.
Brauer, Philipp, to Brown, Boveri & Cie A.G. High-temperature fuel element apparatus. 3,397,028, 8-13-68, Cl. 431—115.
Brinkerhoff, Donald E.: *See*—
  Prewitt, Thomas A., and Brinkerhoff. 3,397,286.
Bristol Siddeley Engines Ltd.: *See*—
  Norton, James L. 3,396,942.
Britain, J W., and P. G. Gemeinhardt, to Mobay Chemical Co. Cellular polyurethanes. 3,397,158, 8-13-68, Cl. 260—2.5.
Britax (London) Ltd.: *See*—
  Burleigh, David W. 3,396,437.
British Petroleum Co. Ltd.: *See*—
  Ford, John F., and Wood. 3,397,219.
British Straddle Carrier Co. Ltd.: *See*—
  Houlton, George A. A. 3,396,861.
Brittain, Anthony S.: *See*—
  Taylor, Robert C., and Brittain. 3,396,558.
Brosene, William G., Jr., to Studebaker Corp. Stud feeding mechanism. 3,397,015, 8-13-68, Cl. 302—2.
Brott, Joseph W., 22½% to H. J. Holtorf, Jr., 22½% to L. V. H. Hansen, and 5% to A. J. Kortum. Lettering set guide for felt tip markers. 3,396,469, 8-13-68, Cl. 33—23.
Brown, Boveri & Cie A.G.: *See*—
  Brauer, Philipp. 3,397,028.
Brown, George I.: *See*—
  Schmidle, Claude J., and Brown. 3,397,166.
Brown, Fred L., to Interlake Steel Corp. Cupola furnace with noncorrosive outer coating. 3,396,959, 8-13-68, Cl. 266—32.
Brown, Jon, to Maryland Cup Corp. Stacker device. 3,396,857, 8-13-68, Cl. 214—6.
Brown, Keith M. Hand-wrist and fore-arm exercising device. 3,396,967, 8-13-68, Cl. 272—67.
Brown, Louise H., and R. Swidler, to Armour and Co. Corrosion inhibitor composition and process. 3,397,152, 8-13-68, Cl. 252—390.
Brown, Michael R., W. B. Nash, G. Phillips, and W. A. Shand, to Minister of Aviation, Her Britannic Majesty's Government of the United Kingdom of Great Britain and Northern Ireland. Optical frequency changing devices and materials for use therein. 3,397,316, 8-13-68, Cl. 250—213.
Brown, Robert C. Easel bracket for ladders. 3,396,929, 8-13-68, Cl. 248—211.
Brown & Root, Inc.: *See*—
  Moore, Warren T. 3,396,747.

Browning, Melvin F., and W. J. Wilson, to United States of America, Atomic Energy Commission. Process of vapor coating nuclear fuel with beryllium oxide and carbon. 3,397,075, 8–13–68, Cl. 117—46.
Brownline Corp.: See—
Jensen, Richard H. 3,396,678.
Brownstein, Arthur M., to Allied Chemical Corp. Novel preparation of boron-containing compounds. 3,397,228, 8–13–68, Cl. 260—502.3.
Bruno, Michael F., and J. D. Sculley, to E. I. du Pont de Nemours and Co. Coated polyolefin film structure and process of preparation thereof. 3,397,163, 8–13–68, Cl. 260—28.5.
Brunswick Corp.: See—
Gray, Lysle B. 3,396,410.
Buchmann, Fred J.: See—
Parker, Paul T., and Buchmann. 3,397,174.
Buchner, Marvin K., to FMC Corp. Method of and apparatus for preparing fruit. 3,396,770, 8–13–68, Cl. 146—241.
Bucher, William J., to Whirlpool Corp. Adjustable water level control for ice maker. 3,396,552, 8–13–68, Cl. 62—233.
Buckner, Ned: See—
Wakefield, George P., Vick, and Buckner. 3,397,308.
Buckner, Teddy J., and R. T. Collins, to General Motors Corp. Support bracket. 3,396,851, 8–13–68, Cl. 211—13.
Buhler, Gebruder, A.G.: See—
Nef, Alfred. 3,396,873.
Burachinsky, Bohdan V., and Y. P. Jacob, to Interchemical Corp. Printing on polystyrene. 3,397,074, 8–13–68, Cl. 117—38.
Burkhard, Kurt, to Avco Corp. Electrode structure for a magnetohydrodynamic device. 3,397,331, 8–13–68, Cl. 310—11.
Burleigh, David W., to Britax (London) Ltd. Slimline safety belt buckle. 3,396,437, 8–13–68, Cl. 24—230.
Burns, Erwin, and L. Jones. Circulating washer tool. 3,396,-798, 8–13–68, Cl. 166—147.
Burnside, Ralph. Ball-cock shank. 3,396,995, 8–13–68, Cl. 285—330.
Burris, Truman B.: See—
Piper, Myron M., and Burris. 3,396,793.
Burt, James G., and H. E. Phillips, to E. I. du Pont de Nemours and Co. Composition and method for treating surfaces. 3,397,150, 8–13–68, Cl. 252—194.
Burton, Paul E.: See—
Diana, William D., Wellman, and Burton. 3,397,120.
Butterworth Hydraulic Developments Ltd.: See—
Butterworth, Philip. 3,396,634.
Butterworth, Philip, to Butterworth Hydraulic Developments Ltd. Fluid pressure operated linear motor. 3,396,634, 8–13–68, Cl. 91—224.
Bylund, Linton D., to Reynolds Metals Co. Aluminum-iron articles and alloys. 3,397,044, 8–13–68, Cl. 29—183.
Cadiou, Jean, to Societe Anonyme Andre Citroen. Anti-roll devices for automatic vehicles. 3,396,984, 8–13–68, Cl. 280—6.
Cairns, Theodore L., to E. I. du Pont de Nemours and Co. 3-aminotricyclo[4.3.1.$1^{3,8}$]-undecanes. 3,397,233, 8–13–68, Cl. 260—563.
California Computer Products, Inc.: See—
Jennings, Alan K., Cone, and Seid. 3,397,389.
Callaway, Richard W.: See—
Walker, James H. 3,396,886.
Camp, Eldridge K., to American Chemical & Refining Co., Inc. Method and bath for electroplating gold. 3,397,127, 8–13–68, Cl. 204—46.
Canadian Industries Ltd.: See—
Falconer, Errol L., Kelly, and James. 3,397,096.
Canny, Floyd H.: See—
Mosbier, Edson G., and Canny. 3,396,828.
Carborundum Co., The: See—
Casper, Richard L., and Baumeister. 3,397,375.
Carlou, Frank E., W. E. Loeb, and D. J. Valley, to Union Carbide Corp. Thin film capacitors. 3,397,085, 8–13–68, Cl. 117—217.
Carlson, Paul O., and E. W. Michael, to General Foods Corp. Beverage mix and process. 3,397,063, 8–13–68, Cl. 99—78.
Carman, Robert R., and S. J. Pipitone, to Goodyear Aerospace Corp. Collapsible dish reflector. 3,397,399, 8–13–68, Cl. 343—915.
Carrier Corp.: See—
McGrath, William L. 3,396,549.
Carter, Elbert P., to E. I. du Pont de Nemours and Co. Method for unwinding rolls. 3,396,917, 8–13–68, Cl. 242—55.
Casalis, Alfred. Lock. 3,396,560, 8–13–68, Cl. 70—134.
Casper, Richard L., and F. J. Baumeister, to The Carborundum Co. Heating element. 3,397,375, 8–13–68, Cl. 338—330.
Caterpillar Tractor Co.: See—
Bernson, Elmer R., and Engel. 3,396,534.
Borer, Herbert W., Profit, and White. 3,396,863.
Fahgman, Charles N., Gutzwiller, and Johnson. 3,396,-711.
Cavanagh, Walter R., to Hooker Chemical Corp. Corrosion resistant coatings. 3,397,092, 8–13–68, Cl. 148—6.16.
Cavitron Corp.: See—
Balamuth, Lewis. 3,396,892.
Cawley, Richard E., to Lennox Industries, Inc. Arrangement for reducing compressor discharge gas temperature. 3,396,-550, 8–13–68, Cl. 62—117.
Celanese Coatings Co.: See—
Hicks, Darrell D. 3,397,160.
Slater, William W., and Thow. 3,397,159.
Celanese Corp.: See—
Joseph, Charles W., Jr., and Backhaus. 3,396,527.
Halek, George W., and Berardinelli. 3,397,181.
Centriblast Corp.: See—
Liebman, Arno J. 3,396,914.
Cerreta, John J.: See—
Dorion, George H., Nachtigall, and Cerreta. 3,397,059.
Cessna Aircraft Co., The: See—
Darling, Marvin C. 3,396,635.
Miller, Wendell E., Walter, and Tessmann. 3,396,536.
Champaneria, Ashok J., and W. S. Russell, to Hooker Chemical Corp. Metal coating composition and process. 3,397,090, 8–13–68, Cl. 148—6.2.
Champion Spark Plug Co.: See—
Metzker, Edward R., and Green. 3,397,357.
Poland, Milton E. 3,397,083.
Charles, Robert, and P. L. Brasseur, to Ethylene-Plastique. Polyoxymethylene-type resins and process for their production. 3,397,182, 8–13–68, Cl. 260—67.
Checker Motors Corp.: See—
May, Vivian G., and Hori. 3,397,005.
Chemische Fabriek L. van der Grinteen, N.V.: See—
Van Loon, Arie, and Roncken. 3,397,058.
Chen, Richard J., and N. Gold, to Polaroid Corp. Apparatus for treating photographic sheet materials with a liquid. 3,396,648, 8–13–68, Cl. 95—13.
Chicago Bridge & Iron Co.: See—
Stafford, Donald C. 3,397,113.
Chicago Specialty Mfg. Co.: See—
Gore, William C., and Shapiro. 3,396,614.
Samuels, Abraham M., and Shapiro. 3,396,604.
Chin, Pao H.: See—
Abramson, Paul, Chin, and Stilwell. 3,397,388.
Christie, John A., to The Technical Rubber Co. Patch process. 3,397,100, 8–13–68, Cl. 156—97.
Christiansen, Erik F., to Danfoss A/S. Method of diffusion of molybdenum into extruded ferrous metal surfaces of a piston. 3,396,447, 8–13–68, Cl. 29—156.5.
Ciba Ltd.: See—
Luethi, Christian, Biland, and Duennenberger. 3,397,205.
Toepfl, Rosemarie, and Maeder. 3,397,190.
Cible, Pierre. Headlamp units. 3,397,307, 8–13–68, Cl. 240—41.3.
Ciccone, Vincent F., Jr.: See—
Ciccone, Anthony E. and V. F. Ciccone, Jr. 3 396,968.
Ciccone, Anthony E. and V. F. Ciccone, Jr. Ball arrester. 3,396,968, 8–13–68, Cl. 273—39.
Cincinnati Mine Machinery Co., The: See—
Krekeler, Claude B. 3,397,012.
Krekeler, Claude B. 3,397,013.
Ciranko, Dazo H., to General Motors Corp. Weld head locator. 3,397,299, 8–13–68, Cl. 219—86.
Cirone, Joseph. Fire escape window. 3,396,489, 8–13–68, Cl. 49—276.
Clapp, James W., to American Cyanamid Co. Method for the control of fungi. 3,397,274, 8–13–68, Cl. 424—316.
Clark, Oscar M., to Motorola, Inc. High voltage semiconductor rectifier with a sloping surface across barrier edge. 3,397,349, 8–13–68, Cl. 317—234.
Clark, Samuel H. Fishing sinker. 3,396,484, 8–13–68, Cl. 43—42.13.
Clarke, James A.: See—
Lopez, Romeo, and Clarke. 3,397,156.
Coast Metals, Inc.: See—
Hawk, Elwin A., Sr. 3,396,746.
Coats, Carlton E., R. B. Graver, and S. F. Hudak, to Ashland Oil & Refining Co. Alkyd resins prepared by simultaneously reacting (1) a polycarboxylic acid, (2) a polyhydric alcohol having at least 3 hydroxyl groups and (3) a mono-epoxyalkane having 8–26 carbon atoms. 3,397,255, 8–13–68, Cl. 260—850.
Coca-Cola Co., The: See—
Rutherford, Bruce J., Shipley, and Satchwill. 3,396,653.
Cole, Douglas L., to General Electric Co. Storage and release apparatus for measuring devices. 3,396,580, 8–13–68, Cl. 73—343.
Cole, Henry B., to American Optical Co. Optical fibers and fiber optical image-transfer devices having light absorbing elements. 3,397,022, 8–13–68, Cl. 350—96.
Collette, John W., and R. W. Keown, to E. I. du Pont de Nemours and Co. Stable chloroprene-sulfur copolymer. 3,397,173, 8–13–68, Cl. 260—45.9.
Collins, Roy T.: See—
Buckner, Teddy J., and Collins. 3,396,851.
Commercial Shearing & Stamping Co.: See—
White, Thomas L. 3,396,543.
Commissariat a l'Energie Atomique: See—
Guth, Jean L., and Wey. 3,397,142.
Compagnie Francaise Thomson Houston-Hotchkiss Brandt: See—
Guyot, Lucien F., and Peres. 3,397,341.
Compagnie Generale Electricite: See—
Blet, Jean-Pierre, and Dufour. 3,397,370.
Cone, Ronald D.: See—
Jennings, Alan K., Cone, and Seid. 3,397,389.
Conners, Alan: See—
Narins, Arthur P., Austin, Ellis, and Conners. 3,397,036.
Construction Techniques, Inc.: See—
Lamberton, Bruce A. 3,397,260.
Lamberton, Bruce A. 3,396,545.
Lamberton, Bruce A. 3,396,542.
Contevita, John, to International Environmental Dynamics. Suspension system for building construction. 3,396,502, 8–13–68, Cl. 52—236.
Cook, George R., to Cutler Mail Chute Co., Inc. Holder for glue components. 3,396,836, 8–13–68, Cl. 206—47.
Cooper, Victor D.: See—
Adams, Floyd N., Cooper, and Sommers. 3,396,677.
Coover, Harry W., Jr.: See—
Shearer, Newton H., Jr., and Coover. 3,397,196.

Cope, F. Troy, and R. J. Perrine, to The Electric Furnace Co. Emergency atmosphere annealing furnace and method. 3,396,961, 8–13–68, Cl. 263—3.
Copping, Bruce G., to Geo. J. Meyer Mfg. Co. Readily openable package assembly. 3,396,841, 8–13–68, Cl. 206—65.
Cornell, John H., Jr., to Monsanto Research Corp. Acyl substituted 2,2′-biphenylene chalkogenides as insecticides. 3,397,271, 8–13–68, Cl. 424—244.
Corni, Antonio, to Fiat Societa per Azioni. Automatic depth control device for tractor-hauled agricultural implements. 3,396,803, 8–13–68, Cl. 172—7.
Costain, Richard, Ltd.: See—
Jansz, Joost W. 3,396,944.
Crandall, Charles L., to Small Business Administration. Inductive loop metallic object detector. 3,397,364, 8–13–68, Cl. 331—65.
Crawford, Philip N.: See—
Thomson, Henry A., Witkowski, and Crawford. 3,397,290.
Crawford, William R., III. Underwater motor. 3,396,941, 8–13–68, Cl. 253—1.
Cress, Hobart A., and J. T. Walls, to United States of America, Atomic Energy Commission. Friction welder. 3,396,893, 8–13–68, Cl. 228—2.
Crisp, Oris L. Outrigger stabilizer for cranes. 3,396,854, 8–13–68, Cl. 212—145.
Crossley, Harold T.: See—
Morris, James W., and Crossley. 3,396,507.
Cull, Jay A., to Hooker Chemical Corp. Purifying aqueous acid phosphate solutions containing fluorine impurities. 3,397,123, 8–13–68, Cl. 203—49.
Cummerow, Robert L.: See—
Forman, Ralph, Ghormley, and Cummerow. 3,397,327.
Cummins, Earl W., to E. I. du Pont de Nemours and Co. Process for the preparation of α-phenyl-N-methyl nitrone. 3,397,234, 8–13–68, Cl. 260—566.
Cunningham, David K., and R. G. Hans, to The Pillsbury Co. Edible food release composition. 3,397,065, 8–13–68, Cl. 99—90.
Cupper, Robert A., and M. W. Ranney, to Union Carbide Corp. Lubricating compositions. 3,397,146, 8–13–68, Cl. 252—34.
Curran, John E., to Associated Electrical Industries Ltd. Heating of substances by electrical energy at microwave frequencies. 3,397,296, 8–13–68, Cl. 219—10.55.
Curtis & Marble Machine Co.: See—
Davidson, Ralph L., and Parker. 3,396,686.
Cutler Mail Chute Co., Inc.: See—
Cook, George R. 3,396,836.
Cyba, Henry A., to Universal Oil Products Co. Hydrocarbon oils containing alkylthiophosphoric acid salts of polymeric condensation products. 3,397,144, 8–13–68, Cl. 252—32.7.
DCA Food Industries, Inc.: See—
Adams, Floyd N., Cooper, and Sommers. 3,396,677.
Daddona, Domenic J., Jr., to Scovill Mfg. Co. Snap fastener assembly. 3,396,436, 8–13–68, Cl. 24—208.
Dai Cellu Kabushiki Kaisha: See—
Tanaka, Atsushi, Hozumi, and Hatada. 3,397,183.
Daimler-Benz Aktiengesellschaft: See—
Altmann Werner E. 3,296,599.
Ruckert, Friedrich. 3,396,825.
Schumacher, Ernst. 3,396,608.
Danfoss A/S: See—
Christiansen, Erik F. 3,396,447.
Valbjorn, Knud V. 3 396,907.
Vind, Holger V. 3 396,908.
Waldorff, Jorgen F. 3,396,668.
D'Angelo, Anthony J.: See—
Heden, Folke. 3,396,654.
Darling, Marvin C., to The Cessna Aircraft Co. Cushion stop for hydraulic actuators. 3,396,635, 8–13–68 Cl. 91—396.
Darrow, Kenneth G., and C. H. Titus, to General Electric Co. Metal-clad switchgear employing vacuum type circuit interrupters. 3,397,293, 8–13–68, Cl. 200—50.
Data Trends, Inc.: See—
Highleyman, Wilbur H. 3,397.404.
Davidson, Frederic A., Jr., and R. D. Schalge, to Harsco Corp. Cathead supports. 3,396,498, 8–13–68, Cl. 52—123.
Davidson, Ralph L., and C. C. Parker, to Curtis & Marble Machine Co. Sewing apparatus. 3,396,686, 8–13–68, Cl. 112—2.
Davidson, Richard M., to Bell & Howell Co. Fast acting reversible friction drive mechanism. 3,396,589, 8–13–68, Cl. 74—202.
Davis, Frank L. Buckle with automatically operating positive release action. 3,396,435, 8–13–68, Cl. 24—78.
Davis, Warren C., and G. R. Spencer to Raytheon Co. Target rotatable by tubular member of deformable, shape retaining material. 3 397,336, 8–13–68, Cl. 313—146.
Davy and United Engineering Co. Ltd.: See—
Alsop, James F., and Maltby. 3,396,566.
Day, Garrel O.: See—
Maddock, William E. 3 396,946.
Day, Lawrence E. Hydraulic die assembly for the forming of sheet material. 3,396,561, 8–13–68, Cl. 72—63.
Day, Roger E., C. J. Metzger, and L. Stella, to General Motors Corp. Separator. 3,397,019, 8–13–68 Cl. 308—193.
Dayhoff, Donald G. Dental appliance. 3,396,468, 8–13–68, Cl. 32—33.
Dayton, Irving E.: See—
Saari, John M., Schoen, and Dayton. 3,397 311.
Dea, Stanley J. Method of dewatering sewage sludge. 3,397,-140, 8–13–68, Cl. 210—10.
Dean, James C., to United Aircraft Corp. Flight control linkage for aircraft. 3,396,597, 8–13–68, Cl. 74—469.
Dean, James T., to Mobil Oil Corp. Storage method and system for TFL tools. 3,396,789, 8–13–68, Cl. 166—.5.
Deerpark Machine Co.: See—
Balogh, John. 3,397,136.
Defiance-Azon Corp.: See—
Johnston, Robert C. 3 397,315.
Deighton, Thomas, to Babcock & Wilcox, Ltd. 3,397,114, 8–13–68, Cl. 176—54.
De Jon, Cornelis P., H. J. Kanters, to North American Philips Co., Inc. Apparatus for feeding a welding electrode of quadrangular cross-section. 3,396,891, 8–13–68, Cl. 226—184.
Delforce, Cedric G., and G. L. Donnellan, to Lear Siegler, Inc. Bearing units. 3,397,016, 8–13–68, Cl. 308—3.
Delorme, Hector. Air propeller. 3,396,801, 8–13–68, Cl. 170—170.
Demaison, Raymond J., to Quigley Co., Inc. Apparatus for use in applying refractory coatings to refractory linings of small basic oxygen furnaces. 3,396,855, 8–13–68, Cl. 214—1.
Deneke, Karl-Heinz. Package for needles or the like. 3,396,833, 8–13–68, Cl. 206—46.
Denholm, Alec S., to Ion Physics Corp. Flash X-ray dielectric wall structure. 3,397,337, 8–13–68, Cl. 313—250.
Denki Onkyo Co., Ltd.: See—
Iijima, Akira. 3,397.282.
Dennis, James K., and V. Draugelis, to Xerox Corp. Sensor gauge. 3,396,965, 8–13–68, Cl. 271—64.
Dennis, John L.: See—
Fine, Laughton T., Dennis, and Bay. 3,397,324.
De Oliveira, Luiz R., to Magnesita S.A. Adjustable keystone assembly of molded refractory material for arches, walls and the like. 3,396,504, 8–13–68, Cl. 52—575.
De Pugh Chauncey C., and R. F. Snyder, to Thiokol Chemical Corp. Heat-sealable polyolefin film coated with a plasticized vinylidene chloride copolymer. 3,397,079, 8–12–68, Cl. 117—122.
Derfer, John M.: See—
Bordenca, Carl, and Derfer. 3,397,053.
Derkacz, John: See—
Osterholtz, Carl E., and Derkacz. 3,396,877.
Designatronics, Inc.: See—
Walker, Melvin F. 3,396,594.
Desnoes Arnold B.: See—
Kern, Joseph F., Desnoes, and Adams. 3,397,031.
Dettoni, Giorgio, to Officine Meccaniche Agudio S.p.A. Blondin cableway installation. 3,396,853, 8–13–68, Cl. 212—121.
Deutsch Co. Electronic Components Div., The: See—
Lawrence, Roland B. 3 397,384.
Deutsche Gold- und Silber-Scheideanstalt vormals Roessler: See—
Ney, Peter, and Kuhnmunch. 3,397,033.
Schuler, Wilhelm A., Bader, Rink, and Weigert. 3,397,172.
Diamond, Milton J., and R. J. Kinsey, to General Motors Corp. Mechanical metal pouring control system and components thereof. 3,396,870, 8–13–68, Cl. 222—14.
Diamond Shamrock Corp.: See—
Mazur, Paul A. 3,397,218.
Diana, William D., W. E. Wellman, and P. E. Burton, to Esso Research and Engineering Co. Purification of dihydroisophorone by plural distillation and isomerization. 3,397,-120 8–13–68, Cl 203—28.
Dias, Fleming, to Zenith Radio Corp. Controllable simulated inductor using tetrode transistors. 3,397,363, 8–13–68, Cl. 333—8.
Diassi, Patrick A., to E. R. Squibb & Sons, Inc. 12 Methyl-9,11-dihalo-progesterones. 3,397,213, 8–13–68, Cl. 260—397.3.
Dickie, Robert J., and J. P. Wilson, to General Precision Systems, Inc. Vibration isolator. 3,396,925, 8–13–68, Cl. 248—26.
Diepeveen, John C., to Unitek Corp. Precision drive structure for rotatable member. 3,396 856, 8–13–68, Cl. 214—1.
Dietrich, Oran R., to Electro Oceanics, Inc. Fluid proof junction box. 3,397,378, 8–13–68, Cl. 339—60.
Dill, Charles L., Jr., to Edward M. Long. Auxiliary circuit employing a diode to ensure the energization of the low beam lamps whenever the motor is operating. 3,397,342, 8–13–68, Cl. 315—79.
Dills, Leland L.: See—
Walker, James H. 3,396,886.
Di Margio, Nicholas A., and I. L. Silver, to Syro Steel Co. Production line for steel landing mats. 3,396,451, 8–13–68, Cl. 29—200.
Dimentberg, Moses. Electrical transmission cooling system. 3,396,551, 8–13–68, 62—185.
Di Pilla, Anthony A., to Robertshaw Controls Co. Actuating mechanism for push button switch operating devices. 3,396,602, 8–13–68, Cl. 74—503.
Doblin, Jay: See—
Allseits, Frank, and Doblin. 3,396,733.
Doebel, Karl J., and F. Leonard, to Geigy Chemical Corp. Cycloalkyl benzylamine and anorexigenic compositions and method of use. 3,397,272, 8–13–68, Cl. 424—248.
Doeh, Benjamin B.: See—
Sooryn, Vsevolod. 3,397,133.
Dohms, Otto P., and M. Updike. Animal trap. 3,396,486, 8–13–68, Cl. 43—90.
Domen, Charles: See—
Ryckaert, Andre G., and Domen. 3,397,246.
Domen, Lucie nee D.: See—
Ryckaert, Andre G., and Domen. 3,397,246.
Donalies, Daniel J., to Xerox Corp. Xerographic toner dispensing apparatus. 3,396,700, 8–13–68, Cl. 118—637.
Donche-Gay, Pierre, to American Engineering Co., Ltd. Barbed wire machine. 3,396,759, 8–13–68, Cl. 140—58.

Donnellan, Gerald L.: *See*—
Delforce, Cedric G., and Donnellan. 3,397,016.
Donovan, Robert P.: *See*—
Gallagher, Robert C., and Donovan. 3,397,326.
Dorfman, Edwin: *See*—
Weil, Edward D., and Dorfman. 3,397,055.
Dorfmann, Oskar, to Federal Carton Corp. Carton erecting and filling machine. 3,396,508, 8–13–68, Cl. 53—186.
Dorfmann, Oskar, to Federal Carton Corp. Locked container. 3,396,898, 8–13–68, Cl. 229—36.
Dorion, George H., G. W. Nachtigall, and J. J. Cerreta, to American Cyanamid Co. Photochromic polymethylmethacrylate element on contact with polyester resinous material. 3,397,059, 8–13–68, Cl. 96—87.
Dorr-Oliver Inc.: *See*—
Hubbard, Peter J. 3,396,680.
Hubbard, Peter J. 3,396,681.
Dosch, Peter, to Heberlein & Co. A.G. Self-regulating photoelectric circuit. 3,397,317, 8–13–68, Cl. 250—219.
Dougherty, Clifford C., Jr: *See*—
McMinn, Robert E., and Dougherty. 3,396,512.
Dounis, Leona H.: *See*—
Raptis, George M. 3,396,996.
Dow Chemical Co.: *See*—
Ayres, Ralph E. 3,397,266.
Fitzgerald, Charles E. 3,396,868.
Holmes, George W. 3,397,157.
Knierlem, Herman, Jr. 3,397,071.
Layne, Gilbert S., and Huml. 3,397,056.
Levine, Leonard. 3,397,235.
Lopez, Romeo, and Clarke. 3,397,156.
McFedries, Robert, Jr. 3,396,901.
Miller, Lewis S. 3,397,161.
Reding, John N., Jr. 3,396,777.
Roth, Harold H. 3,397,179.
Sak, James G. 3,397,139.
Schaefer, Harold F., and Westcott. 3,397,068.
Smith, Harry A. 3,397,188.
Tobey, Stephen W. 3,397,115.
Trepanier, Donald L. 3,397,201.
Turner, Robert B. 3,396,473.
Westcott, Robert F. 3,396,430.
Windecker, Leo J. 3,396,922.
Windecker, Leo J. 3,396,923.
Wright, Donald R. 3,396,601.
Wright, Donald R. 3,396,616.
Downey, Rogers B., to Polaroid Corp. Photographic film assembly. 3,396,647, 8–13–68, Cl. 95—13.
Drager, Otto H.: *See*—
Freytag, Klaus. 3,396,723.
Freytag, Klaus. 3,396,724.
Schreiber, Peter. 3,396,725.
Draugelis, Valdevutis: *See*—
Dennis, James K., and Draugelis. 3,396,965.
Dresser Industries, Inc.: *See*—
Scott, Robert K. 3,396,775.
Venghiattis, Alexis A. 3,396,795.
Drost, Jacques I. J., to Shell Oil Co. Two-step process for preparing alkyd resins from glycidyl esters of alpha-branched monocarboxylic acids, polyhydroxy compounds and phthalic anhydride. 3,397,176, 8–13–68, Cl. 260—47.
Duennenberger, Max: *See*—
Luethi, Christian, Biland, and Duennenberger. 3,397,205.
Dufour, Charles: *See*—
Biet, Jean-Pierre, and Dufour. 3,397,370.
Dufresne, Edmund A. Electric razor cleaning system. 3,396,-462, 8–13–68, Cl. 30—41.5.
Dugan, William P.: *See*—
Freehauf, Eugene G., and Dugan. 3,396,459
Dukas, John. Door and frame constructions. 3,396,490, 8–13–68, Cl. 49—382.
Dumanoir, Jean L., to Schlumberger Technology Corp. Methods of investigating subsurface earth formations by combining the electrical resistivities at different lateral depths within the formations. 3,397,356, 8–13–68, Cl. 324—1.
Dumont, Marcel: *See*—
Faehndrich, Gabriel, and Dumont. 3,396,450.
Dunlavey, Robert J., to Teletype Corp. Electrode assembly for fluid transfer device. 3,397,345, 8–13–68, Cl. 317—3.
Dunlop Rubber Co. Ltd.: *See*—
Edwards, Reginald H., and Holmes. 3,396,774.
Dunn, George L., to Smith Kline & French Laboratories. Nitrothenylideneamino compounds. 3,397,199, 8–13–68, Cl. 260—240.
Dunn, George L., to Smith Kline & French Laboratories. Nitropyrrolylmethyleneaminouracils. 3,387,200, 8–13–68, Cl. 260—240.
Dunwald, Willi: *See*—
Merten, Rudolf, Dunwald, Mielke, and Reese. 3,397,253.
Du Pont de Nemours, E. I., and Co.: *See*—
Alles, Francis P. 3,387,072.
Atadan, Erdem M., and Noren. 3,397,097.
Beckerbauer, Richard. 3,397,191.
Bruno, Michael F., and Sculley. 3,397,163.
Burt, James G., and Phillips. 3,397,150.
Cairns, Theodore L. 3,397,233.
Carter, Elbert P. 3,396,917.
Collette, John W., and Keown. 3,397,173.
Cummins, Earl W. 3,397,234.
Gano, Robert D. 3,397,118.
Hecht, James L., and Polejes. 3,397,108.
Hummel, Donald G., and Swamer. 3,397,248.
Iler, Ralph K. 3,397,171.
Jones, Frank N. 3,397,252.
Loux, Harvey M. 3,397,050.
Mayberry, Thomas C. 3,397,081.
Moseley, Walter W., Jr. 3,397,106.
Roxlo, William D. 3,396,433.
Du Pont de Nemours, E. I., and Co.: *See*—Continued
Sippel, Roy J. 3,397,153.
Taisma, Herbert. 3,397,154.
Willis, Frank M. 3,369,623.
Wolinski, Leon E. 3,397,132.
Durrwerke Aktiengesellschaft: *See*—
Eickenberg, Leo. 3,396,705.
Dutton, Oscar B., and C. B. Petry, to Babcock Electronics Corp. Doppler range measuring system. 3,397,398, 8–13–68, Cl. 343—13.
Dwyer, F. W., Mfg. Co.: *See*—
Locke, John P. 3,397,319.
Dycus, Billy G. Interchangeable neck assemblies for electrical musical instruments. 3,396,621, 8–13–68, Cl. 84—293.
Dynabulk Corp.: *See*—
Paton, Hamilton N. K. 3,396,762.
Eakin, Bertram E.: *See*—
Khan, Amanullah R., Eakin, and Anderson. 3,396,539.
Eastman Kodak Co.: *See*—
Morse, John E., and Thomas. 3,396,732.
Schwan, Judith A., and Jones. 3,397,060.
Shearer, Newton H., Jr., and Coover. 3,397,196.
Thomson, Henry A., Witkowski, and Crawford. 3,397,290.
Eaton, Ben A., to Union Oil Co. of California. Selective plugging of permeable water channels in subterranean formations. 3,396,790, 8–13–68, Cl. 166—9.
Eaves, Raymond O., to Batley-Janss Enterprises. Means and method of controlling dehydrators. 3,396,476, 8–13–68, Cl. 34—25.
Ebetino, Frank F.: *See*—
Berman, Harold, and Ebetino. 3,397,208.
Eckersley, Dennis: *See*—
Barben, Ian K., and Eckersley. 3,397,207.
Eckstein, Emil L. Weight-balanced adjustable radiation apparatus. 3,396,931, 8–13–68, Cl. 248—280.
Ednalite Corp., The: *See*—
Rouy, Auguste L. M. A., and Weinstein. 3,396,627.
Edson Machinery Ltd.: *See*—
McCrudden, Edward. 3,396,505.
Edwards, Herbert C., to The Timken Roller Bearing Co. Single row tapered roller bearing. 3,397,020, 8–13–68, Cl. 308—207
Edwards, Reginald H., and T. Holmes, to Dunlop Rubber Co. Ltd. Inflation valves. 3,396,774, 8–13–68, Cl. 152—427.
Ege, Hans, to Underwriters Safety Device Co. Terminal block mounting means for plug-in type photolectric cell. 3,397,-320, 8–13–68, Cl. 250—239.
Egger, Josef: *See*—
Meltinger, Heinz, and Egger. 3,396,531.
Eggleston Philip W., W. Glen, K. W. Hillier, and I. Marshall, to Imperial Chemical Industries, Ltd. Process for reducing pilling in textile articles. 3,396,446, 8–13–68, Cl. 28—76.
Ehrhardt, Paul: *See*—
Neumann, Roland, Wunschmann, and Ehrhardt. 3,396,-463.
Eickenberg, Leo, to Durrwerke Aktiengesellschaft. Vapor generator. 3,396,705, 8–13–68, Cl. 122—240.
Eisenwerke Kaiserslautern G.m.b.H.: *See*—
Schmitt, Armin. 3,396,667.
Electric Furnace Co., The: *See*—
Cope, F. Troy, and Perrine. 3,396,951.
Electro Oceanics, Inc.: *See*—
Dietrich, Oran R. 3,397,378.
Electro-Therm, Inc.: *See*—
Meng, Eberhard, and Neeld. 3,396,458.
Electronic Communications, Inc.: *See*—
Hughes, Bill B. 3,396,626.
Elektrokemisk A/S: *See*—
Krogsrud, Harald. 3,396,954.
Ellis, John D.: *See*—
Narins, Arthur P., Austin, Ellis, and Conners. 3,397,036.
Ellis, Roger H., to Raychem Corp. Solder device. 3,396,894, 8–13–68, Cl. 228—56.
Ellis, Sidney G.: *See*—
Webb, James E. 3,397,094.
Elmes, Albert W., and M. J. M. Raymond, to Imperial Chemical Industries Ltd. Synthesis pressure vessel. 3,396,865, 8–13–68, Cl. 220—13.
Elsas, Adolf, to Siemens-Reiniger-Werke Aktiengesellschaft. Rotary anode plate for X-ray tubes. 3,397,338, 8–13–68, Cl. 313—330.
Emco Wheaton, Inc.: *See*—
Rosell, Lester P. 3,396,739.
Emhart Corp.: *See*—
Rowe, George E. 3,397,047.
Endevco Corp.: *See*—
Riedel, John C. 3,397,329.
Engel, Hans W.: *See*—
Bernson, Elmer R., and Engel. 3,396,534.
England, Charles J.: *See*—
Scott, Stanley G., and England. 3,396,831.
Enger, Roy E., to Sears, Roebuck and Co. Hat. 3,396,408, 8–13–68, Cl. 2—183.
Englesberg, Julius L. Filtering apparatus adjustable for series or parallel filtration. 3,396,847, 8–13–68, Cl. 210—85.
Englesberg, Julius L.: *See*—
Otto, Walter J. 3,397,135.
Epstein, Shimon: *See*—
Greidinger, Dahlia S., Bernstein, and Epstein. 3,397,198.
Equipment Development Corp.: *See*—
Macklem, F. Sutherland. 3,396,645.
Eresta Warenhandelsgesellschaft mit Beschrankter Haftung: *See*—
Von Bethmann, Max F., Lipp, and Bayer. 3,396,735.
Ergenc, Mehmet S., and T. H. Liem, to Sulzer Bros. Ltd. Honeycombed restricted tube heat exchanger. 3,396,784, 8–13–68, Cl. 165—172.
Erickson, John G., to Minnesota Mining and Mfg. Co. Polymeric sulfides. 3,397,189, 8–13–68, Cl. 260—79.

Eriksson, Henning E. and F. A. Device for attaching objects to a base or foundation of low mechanical strength. 3,396,-624, 8–13–68, Cl. 85—66.
Erlicki, Michael S.: *See*—
Uri, Joseph B., Erlicki, and Schieber. 3,397,361.
Esso Research and Engineering Co.: *See*—
Diana, William D., Wellman, and Burton. 3,397,120.
Parker, Paul T., and Buchmann. 3,397, 174.
Estep, Shelby L., to Victor Comptometer Corp. Archery target of bundled plastic rods. 3,396,971, 8–13–68, Cl. 273—102.
Ethyl Corp.: *See*—
Grammer, George N., and Trotter. 2,397,148.
Ethylene-Plastique: *See*—
Charles, Robert, and Brasseur. 3,397,182.
Evans, Richard H.: *See*—
Bagley, Roy, and Evans. 3,396,707.
Everett, Hazen F. Roller pump. 3,396,669, 8–13–68, Cl. 103—149.
FMC Corp.: *See*—
Buchner, Marvin K. 3,396,770.
Gilmore, Charles G. 3,396,442.
Gresham, John T. 3,396,587.
Hirahara Katsuji. 3,396,769.
Faehndrich, Gabriel, and M. Dumont. Process for making a unit consisting of a time piece spiral and a collet. 3,396,-450, 8–13–68, Cl. 29—178.
Faisandier, Jacques. Launching posts and the remote control of missiles. 3,396,629, 8–13–68, Cl. 89—1.815.
Falconer, Errol L., C. Kelly, and N. James, to Canadian Industries Ltd. Thickened inorganic oxidizer salt explosive slurry sensitized with a soluble polyflavonoid. 3,397,096, 8–13–68, Cl. 149—39.
Falls Engineering & Machine Co., The: *See*—
Miller, Robert P., and Kuts. 3,396,615.
Fangman, Charles N., W. R. Gutzwiller, and C. C. Johnson, to Caterpillar Tractor Co. Spacer deck for engine cylinder block. 3,396,711, 8–13–68, Cl. 123—193.
Farbenfabriken Bayer Aktiengesellschaft: *See*—
Heydkamp, Wolfgang, Kallert, Muller, and Freytag. 3,397,184.
Merten, Rudolf, Dunwald, Mielke, and Reese. 3,397,253.
Farnsworth Franklin D.: *See*—
Badin, Frank E., and Farnsworth. 3,396,584.
Farren, Paul L. Reel storage container. 3,396,840, 8–13–68, Cl. 206—65.
Farrington, Grant M., to General Refractories Co. Precast taphole assembly. 3,396,961, 8–13–68, Cl. 266—42.
Fauber, Eugene M.: *See*—
Podlipnik, John, Karr, and Fauber. 3,397,082.
Faulkner, Clarence F., to Puritan Cordage Mills. Bobbin carrier for braiding machines and the like 3,396,625, 8–13–68, Cl. 87—22.
Federal Carton Corp.: *See*—
Dorfmann, Oskar. 3,396,508.
Dorfmann, Oskar. 3,396,898.
Fehner, Robert H., to Minnesota Mining and Mfg. Co. Soot-resistant roofing grannles. 3,397,073, 8–13–68, Cl. 117—27.
Felix, Hans, to Moser-Glaser & Co., A.G. Method of making insulating bodies. 3,397,098, 8–13–68, Cl. 156—48.
Fellows Gear Shaper Co., The: *See*—
Tlaker, Erich. 3,396,563.
Fengler, Harald, H. Schausberger, and F. Kocourek, to Agfa-Gevaert Aktiengesellschaft. Sheet feeding apparatus. 3,396,-964, 8–13–68, Cl. 271—5.
Fenton, Donald M., to Union Oil Co. of California. Preparation of esters of unsaturated acids. 3,397,225, 8–13–68, Cl. 260—486.
Fenton, Donald M., to Union Oil Co. of California. Preparation of esters from olefins. 3,397,226, 8–13–68, Cl. 260—486.
Ferguson, Stewart B. Shake board-making machine and shake board-making process and product. 3,396,764, 8–13–68, Cl. 144—326.
Fernandes, Mario V., H. Koprowski, and T. J. Wiktor, to Research Corp. Method of producing rabies vaccine. 3,397,-267, 8–13–68, Cl. 424—89.
Ferris, Jack. Vinyl mold making apparatus. 3,396,934, 8–13–68, Cl. 249—163.
Feucht, Robert H.: *See*—
Adamson, William G., Bonnell, and Feucht. 3,396,918.
Fiat Societa per Azioni: *See*—
Corni, Antonio. 3,396,803.
Zerbi, Pier C. 3,396,672.
Field, Trevor D.: *See*—
Merryweather, John P., McLean, and Field. 3,397,095.
Finch, Earl A. Container with integral measuring chamber. 3,396,875, 8–13–68, Cl. 222—456.
Fine, Laughton T., J. L. Dennis, and G. B. Bay, to Avco Corp. Peak amplitude to R.M.S. limiter. 3,397,324, 8–13–68, Cl. 307—237.
Finken, Robert E.: *See*—
Little, Thomas W., and Finken. 3,396,797.
First National Bank of Minneapolis: *See*—
Lazan, Benjamin J. 3,396,612.
Fischer, Artur. Motion-transmitting device. 3,396,596, 8–13–68, Cl. 74—432.
Fischer, Arthur J.: *See*—
Sontheimer, Heinrich, and Fischer. 3,397,143.
Fischer, Leonard J. Fork lift truck structure. 3,396,862, 8–13–68, Cl. 214—620.
Fischer, Walther C. Speed boost control for an engine exhaust driven turbocharger. 3,396,533, 8–13–68, Cl. 60—13.
Fisher Governor Co.: *See*—
Piper, Myron M., and Burris. 3,396,793.
Fitzgerald, Charles E., to The Dow Chemical Co. Container. 3,396,868, 8–13–68, Cl. 220—97.
Fitzgerald, Francis A., to Halcon International, Inc. Purification of phthalic anhydride. 3,397,121, 8–13–68, Cl. 203—35.
Fitzsimmons, Brian, to The Timken Roller Bearing Co. Axle bearing construction. 3,397,021, 8–13–68, Cl. 308—236.
Flinn, George E.: *See*—
Rich, William M., Jr., and Flinn. 3,396,610.
Focht, Claude K.: *See*—
Blanshine, Allison W., Kline, Focht, and Wallin. 3,396,-767.
Fogleman, Edgar L.: *See*—
Jensen, Niels H., Westman, and Fogleman. 3,396,778.
Forchheimer, Otto L.: *See*—
Paul, Robert A., and Forchheimer. 3,397,070.
Ford, John F., and J. M. Wood, to British Petroleum Co. Ltd. Preparation of phosphorus-containing olefin polymers and salts thereof. 3,397,219, 8–13–68, Cl. 260—448.
Ford, Lewis M., to Steelcraft Corp. Means for pre-heating air for introduction into incinerators. 3,396,683, 8–13–68, Cl. 110—18.
Ford Motor Co.: *See*—
Stockton, Thomas R. 3,396,609.
Forkner, John H., to The Pillsbury Co. Suspension system for food dehydration centrifuge. 3,396,656, 8–13–68, Cl. 99—407.
Forman, Ralph, J. A. Ghormley, and R. L. Cummerow, to Union Carbide Corp. Thermoelectric conversion process and apparatus. 3,397,327, 8–13–68, Cl. 310—4.
Forsheda Gummifabrik Aktiebolag: *See*—
Nord, Sten. 3,396,974.
Foster, Lawrence E., and H. E. Hicks, to Nooter Corp. Pipe repair device. 3,396,753, 8–13–68, Cl. 138—99.
Fourcade, Robert, and T. Van De Walle, to Houilleres du Bassin du Nord & du Pas-de-Calais. Black acetal resin compositions. 3,397,170, 8–13–68, Cl. 260—37.
Fox, Theodore A., to Sears, Roebuck and Co. Surgical girdle. 3,396,730, 8–13–68, Cl. 128—548.
Fracke, Aribert, H. Klein, R. Pieper, and E. Weber, to Siemens Aktiengesellschaft. Vortex separator for solid or liquid aerosols or the like. 3,396,511, 8–13–68, Cl. 55—83.
Francom, Lawrence R. Bathtub. 3,396,412, 8–13–68, Cl. 4—173.
Frank, Karl F., to Schenck Mfg. Corp. Tap changing transformer power supply system. 3,397,355, 8–13–68, Cl. 323—43.5.
Fraser, Redmond P., Jr., and E. A. Wodward, to American Felt Co. Tennis ball including needle punched fabric cover. 3,396,970, 8–13–68, Cl. 273—61.
Freehauf, Eugene G., and W. P. Dugan, to General Dynamics Corp. Method of fabricating electrical connectors. 3,396,459, 8–13–68, Cl. 29—625.
Freeman, Dennis B.: *See*—
Oswald, Anthony J., and Freeman. 3,397,093.
French, Alfred W., to The French Oil Mill Machinery Co. Drive apparatus. 3,396,592, 8–13–68, Cl. 74—325.
French Oil Mill Machinery Co., The: *See*—
French, Alfred W. 3,396,592.
Frew, Duncan W., Jr., to Shell Oil Co. Petroleum wax containing high-molecular-weight, acetoxy-substituted saturated polybutadiene. 3,397,164, 8–13–68, Cl. 260—28.5.
Freytag, Helmut: *See*—
Heydkamp, Wolfgang, Kallert, Muller, and Freytag. 3,397,184.
Freytag, Klaus, to O. H. Drager. Breathing apparatus with periodic volume change. 3,396,723, 8–13–68, Cl. 128—145.6.
Freytag, Klaus, to O. H. Drager. Breathing apparatus with periodic volume change. 3,396,724, 8–13–68, Cl. 128—145.6.
Friedman, Nathan R. Closure latch assembly. 3,397,001, 8–13–68, Cl. 292—87.
Frisch Kabel- und Verseilmaschinenbau, G.m.b.H.: *See*—
Haarmann, Dietrich. 3,396,526.
Seeger, Heinz. 3,396,525.
Fujihara, Yoshiki, to W. R. Grace & Co. Joint sealing devices. 3,396,640, 8–13–68, Cl. 94—18.
Fujimoto, Yasuo, and M. Teranishi, to Kyowa Hakko Kogyo Co., Ltd. Electrolytic process of producing purine derivatives. 3,397,129, 8–13–68, Cl. 204—74.
Fujita, Yasuhiro, and J. Hijii, to Mitsui Petrochemical Industries, Ltd. Process for the manufacture of esters of benzene dicarboxylic acid. 3,397,224, 8–13–68, Cl. 260—475.
Fujiwara, Yoshio: *See*—
Sasagawa, Ryusuke, Fujiwara, Kosuge, and Sano. 3,397,-089.
Fullen, Warren J.: *See*—
Shackelford, William E., and Fullen. 3,397,178.
Fuller Co.: *See*—
Sontheimer, Heinrich, and Fischer. 3,397,143.
Fulton, Langdon H., to Radio Corp. of America. Tape transport drive means. 3,396,890, 8–13–68, Cl. 226—177.
Funk, Charles F., 25% to J. B. Thompson. Method of cladding metal. 3,396,776, 8–13–68, Cl. 164—54.
Furui, Shungo, 25% to Y. Akamatsu. Plural lamp starting circuit utilizing high impedance and glow discharge switch to cause the lamps to acts as ballasts. 3,397,343, 8–13–68, Cl. 315—189.
Furukawa Denchi Kabushiki Kaisha: *See*—
Sasagawa, Ryusuke, Fujiwara, Kosuge, and Sano. 3,397,-089.
GAF Corp.: *See*—
Grosser, Frederick, and Merijan. 3,397,192.
Stefcik, Andrew, and Beiswanger. 3,397,051.
Welch, Eldred. 3,397,229.
G & H Mechanical Laboratory, Inc.: *See*—
Hoffman, Howard S. 3,396,830.
Gaertner, Van R., to Monsanto Co. Production of halohydrocarbyloxy-sym-triazines. 3,397,204, 8–13–68, Cl. 260—248.

Gagneux, Andre R., and F. Hafliger, to Geigy Chemical Corp. 3-hydroxy-5-isoxazole-carboxamide. 3,397,209, 8-13-68, Cl. 260—307.
Gal, George, to Merck & Co., Inc. Process for preparing 3-indolyl acetic acids. 3,397,211, 8-13-68, Cl. 260—326.13.
Gale, Ronald, to Norris Dispenser, Inc. Dispensing apparatus with movable supply sources. 3,396,869, 8-13-68, Cl. 221—116.
Gallagher, Robert C., and R. P. Donovan, to Westinghouse Electric Corp. Bipolar transistor with field effect biasing means. 3,397,326, 8-13-68, Cl. 307—304.
Galle, Edward L., to The Pillsbury Co. Flour product and method of making. 3,397,067, 8-13-68, Cl. 99—93.
Gano, Robert D., to E. I. du Pont de Nemours and Co. Purification of chloroanilines by vacuum distillation with a chromate. 3,397,118, 8-13-68, Cl. 203—6.
Gardikes, John J.: *See—*
Wynstra, John, and Gardikes. 3,397,254.
Garnett, Edward V. Power ladder and safety device for workman's basket. 3,396,814, 8-13-68, Cl. 182—2.
Garnier, Georges, to Roto-Diesel. Injection pumps. 3,396,710, 8-13-68, Cl. 123—139.
Garriga, Jaime S. Packing case. 3,396,867, 8-13-68, Cl. 220—97.
Garrison, Earl R. Cab-over telescopic camper. 3,397,004, 8-13-68, Cl. 296—23.
Garzon, Ruben, to I-T-E Circuit Breaker Co. Circuit control relay utilizing capacitor and SCR means. 3,397,350, 8-13-68, Cl. 317—142.
Gaudin, Olivier P. Alkylsulphate salts of 2-homomyrtenyloxy 1-diethyl-amino ethane. 3,397,222, 8-13-68, Cl. 260—459.
Gawell, George R.: *See—*
Steel, Francis R., and Gawell. 3,397,367.
Gebr. Eickhoff, Maschinenfabrik und Eisengiesserei m.b.H.: *See—*
Hotger, Karl. 3,396,509.
Gebruder Stober Maschinenfabrik: *See—*
Stober, Paul and W. 3,396,588.
Geigy Chemical Corp.: *See—*
Doebel, Karl J., and Leonard. 3,397,272.
Gagneux, Andre R., and Hafliger. 3,397,209.
Gemeinhardt, Paul G.: *See—*
Britain, J. W., and Gemeinhardt. 3,397,158.
General Cable Corp.: *See—*
Vayda, William C. 3,396,919.
General Connectors Corp.: *See—*
Hale, Jesse R. W. 3,396,992.
General Dynamics Corp.: *See—*
Freehauf, Eugene G., and Dugan. 3,396,459.
General Electric Co. Ltd., The: *See—*
Barnaby, Bernard S., Ward, and Morcombe. 3,397,371.
General Electric Co.: *See—*
Bartfai, John J. 3,397,086.
Cole, Douglas I. 3,396,580.
Darrow, Kenneth G., and Titus. 3,397,293.
Girard, Roland T., Sims, and Wisely. 3,397,080.
Klebe, Johann F. 3,397,220.
Niemann, Robert A. 3,397,321.
Smith, Richard J. 3,396,664.
Solheim, Karsten. 3,396,966.
Ward, William J., III, and Robb. 3,396,510.
Winkler, William K., and Pickerrell. 3,396,717.
General Foods Corp.: *See—*
Carlson, Paul O., and Michael. 3,397,063.
General Mills, Inc.: *See—*
Hasten, Mark, Lobash, and Pommer. 3,396,676.
Shackelford, William E., and Fullen. 3,397,178.
General Motors Corp.: *See—*
Bratten, Thomas A. 3,396,663.
Buckner, Teddy J., and Collins. 3,396,851.
Ciranko, Dazo H. 3,397,299.
Day, Roger E., Metzger, and Stella. 3,397,019.
Diamond, Milton J., and Kinsey. 3,396,870.
Johnson, Douglas. 3,396,905.
Pierce, William R. 3,397,395.
Prewitt, Thomas A., and Brinkerhoff. 3,397,286.
Ridenour, Jack B. 3,396,765.
Sakraida, Carl R., and Pratt. 3,396,712.
Stettner, Ernest R. 3,396,948.
Tuck, Robert M. 3,396,606.
Westercamp, Kenneth L. 3,396,554.
Zeigler, Philip B., and Wight. 3,396,600.
General Precision Systems, Inc.: *See—*
Dickie, Robert J., and Wilson. 3,396,925.
Maclin, Ernest, and Bradshaw. 3,396,586.
General Refractories Co.: *See—*
Farrington, Grant M. 3,396,961.
General Signal Corp., The: *See—*
Auer, John H., Jr. 3,397,304.
Auer, John H., Jr. 3,397,305.
Auer, John H., Jr. 3,397,306.
General Time Corp.: *See—*
Anderson, Wilmer C. 3,396,576.
Genin, Robert, to Amran et Fils S.A.R.I. Audio-visual instrument. 3,396,478, 8-13-68, Cl. 35—35.
Geratebau Eberspacher OHG: *See—*
Munk, Kurt. 3,396,532.
Getz, Robert J.: *See—*
Weyland, Carl M., and Getz. 3,396,716.
Gewiss, Lucien V., to Marc Wood Societe Anonyme pour la Promotion des Echanges Techniques Internationaux. Process and devices for chevroning pliable sheet material. 3,397,261, 8-13-68, Cl. 264—89.
Geyer, Herbert, and H. Minar, to VEB Tabak- und Industriemaschinen Dresden. Article-packing machines. 3,396,506, 8-13-68, Cl. 53—112.
Geyer, Paul, to Uniroyal, Inc. Self-feed ram for extrusion equipment. 3,396,429, 8-13-68, Cl. 18—12.
Ghormley, John A.: *See—*
Forman, Ralph, Ghormley, and Cummerow. 3,397,327.
Giarrizzo, Frank C.: *See—*
Bishup, Bernard W., Repeta, and Giarrizzo. 3,397,386.
Giegerich, Raymond W., to Lovejoy Flexible Coupling Co. Flexible coupling. 3,396,556, 8-13-68, Cl. 64—14.
Giesbrecht, Peter. Window assembly. 3,396,491, 8-13-68, Cl. 49—413.
Gieskieng, David H.: *See—*
Iten, Henry C., and Gieskieng. 3,396,581.
Gilbert, Frederick M., to Sel-Rex Corp. Plating of small parts. 3,397,126, 8-13-68, Cl. 204—23.
Gilbert, Frederick M.: *See—*
Rinker, Edwin C., and Gilbert. 3,397,134.
Gilissen, Hermanus P. J., to AMP Inc. Printed circuit edge connector. 3,397,381, 8-13-68, Cl. 339—176.
Gillis, James M. Combined vehicle radiator and refrigerant condenser. 3,396,779, 8-13-68, Cl. 165—42.
Gilmore, Charles G., to FMC Corp. Lacing guide. 3,396,442, 8-13-68, Cl. 28—1.
Giondi, Leona A. Bicycle wire basket liner and cover. 3,396,-885, 8-13-68, Cl. 224—32.
Girala, Anthony S.: *See—*
Sjoberg, Robert E., Girala, Ryan, and Ross. 3,396,575.
Girard, Roland T., C. T. Sims, and H. R. Wisely, to General Electric Co. Protective ceramic coating. 3,397,080, 8-13-68, Cl. 117—129.
Glacken, Gerald J.: *See—*
Hopkins, John G., and Glacken. 3,396,445.
Glamour Pools, Inc.: *See—*
Lankheet, Jay A. 3,396,500.
Glekas, Louis P.: *See—*
Smith, Robert W., Glekas, Riley, and Swingle. 3,397,117.
Glen, William: *See—*
Eggleston, Philip W., Glen, Hillier, and Marshall. 3,396,-446.
Gleockler, Frederick M. Ladder with transport wheels. 3,396,-815, 8-13-68, Cl. 182—17.
Glick, Jack, to Secret Charm Bra, Inc. Brassiere. 3,396,729, 8-13-68, Cl. 128—489.
Glinka, Carl. Method of producing ethylene and acetylene. 3,397,251, 8-13-68, Cl. 260—679.
Godsey, James K. Angle attachment for rivet gun. 3,396,572, 8-13-68, Cl. 72—452.
Gold, Nicholas: *See—*
Chen, Richard J., and Gold. 3,396,648.
Goldfarb, Kenneth S.: *See—*
Hayes, Thomas. 3,396,990.
Golonski, Leslie P., to Motorola, Inc. Electronic apparatus. 3,397,285, 8-13-68, Cl. 179—1.
Gombar, Andrew J., to Kulka Electric Corp. Fluorescent lampholder with mount clip. 3,397,376, 8-13-68, Cl. 339—56.
Gongwer, Calvin A., to Innerspace Corp. Aquatic apparel. 3,396,406, 8-13-68, Cl. 2—2.1.
Goodman, Donald, I. E. Isgur, and D. M. Wacome, to W. R. Grace & Co. Preparation of latex of butadiene-containing copolymers. 3,397,165, 8-13-68, Cl. 260—29.7.
Goodrich, B. F., Co., The: *See—*
Hasselquist, Victor H. 3,397,104.
Goodyear Aerospace Corp.: *See—*
Carman, Robert R., and Pipitone. 3,397,399.
Goodyear Tire & Rubber Co., The: *See—*
Adamson, William G., Bonnell, and Feucht. 3,396,918.
Gore, William C., and E. B. Shapiro, to Chicago Specialty Mfg. Co. Sliding side jaw wrench having a pivoted rack catch. 3,396,614, 8-13-68, Cl. 81—136.
Grace, W. R., & Co.: *See—*
Alholm, Wayne I., Boulton, and Harrison. 3,396,698.
Bade, Rudolf. 3,396,887.
Fujihara, Yoshiki. 3,396,640.
Goodman, Donald, Isgur, and Wacome. 3,397,165.
Leyer, Alfred. 3,396,618.
Payment, Walter R. 3,397,151.
Graeff, Norwood C.: *See—*
Shannon, Suel G., and Graeff. 3,396,839.
Grammer, George N., and P. W. Trotter, to Ethyl Corp. Stable solvent compositions. 3,397,148, 8-13-68, Cl. 252—171.
Granowitz, Jack M.: *See—*
Richter, Ferdinand J., and Granowitz. 3,396,419.
Grant, Donald R. Camper truck extension structure. 3,397,-006, 8-13-68, Cl. 296—26.
Grant, John C., and R. G. Taylor, Jr., to Byron Jackson Inc. Non-rotating drill pipe protector. 3,397,017, 8-13-68, Cl. 308—4.
Grassman, Hans-Christian: *See—*
Walther, Emil, Schmidt, and Grassman. 3,396,474.
Graver, Richard B.: *See—*
Coats, Carlton E., Graver, and Hudak. 3,397,255.
Gray, Lysle B., to Brunswick Corp. Sterilizer for use with water closets. 3,396,410, 8-13-68, Cl. 4—40.
Grayson Lawrence P., and J. H. Boyden, to United States of America, Army. Optical laser configuration. 3,397,362, 8-13-68, Cl. 330—4.3.
Green, Sam J.: *See—*
Metzker, Edward R., and Green. 3,397,357.
Greene Engineering Co.: *See—*
Greene, George B. 3,397,403.
Greene, George B., 90% to Green Engineering Co. Fluid actuated printer. 3,397,403, 8-13-68, Cl. 346—72.
Gregorovic, Dragutin I. Support penetrating bracket. 3,396,-930, 8-13-68, Cl. 248—216.
Greidinger, Dahlia S., H. Bernstein, and S. Epstein. Degraded cellulose and its manufacture. 3,397,198, 8-13-68, Cl. 260—212.
Gresham, John T., to FMC Corp. Gyroscopes. 3,396,587, 8-13-68, Cl 74—5.5.

Gretag Aktiengesellschaft: *See—*
Mast, Fred. 3,397,313.
Greyson, William L., to Tensolite Insulated Wire Co., Inc. Red-corrosion-inhibited silver plated copper conductor in contact with a fluorinated olefin polymer. 3,397,046, 8-13-68, Cl. 29—195.
Griffin, Ira L., & Sons, Inc.: *See—*
Griffin, Ira L., Sr. 3,396,444.
Griffin, Ira L., Sr., to Ira L. Griffin & Sons, Inc. Size box having additional pressure rolls. 3,396,444, 8-13-68, Cl. 28—28.
Grispo, George V. Micropositioner. 3,396,598, 8-13-68, Cl. 74—479.
Grosser, Frederick, and A. Merijan, to GAF Corp. Alkoxy- and aryloxy-ethylated polymers of heterocyclic N-vinyl monomers and process of preparing the same. 3,397,192, 8-13-68, Cl. 260—80.72.
Gruber, Alvin V., to Herman Kahn. Anti-scale composition. 3,397,149, 8-13-68, Cl. 252—181.
Gruber, George E., to Monitor Mfg., Inc. Bin level indicator with scored diaphragm. 3,396,694, 8-13-68, Cl. 116—114.
Gruver, Jerry T., to Phillips Petroleum Co. Polymer stabilization with 1,4,7,9β and-tetrazaphenalene compounds. 3,397-167, 8-13-68, Cl. 260—33.6.
Guilbert, Inc.: *See—*
Guilbert, Nicholas R., Jr. 3,396,822.
Guilbert, Nicholas R., Jr., to Guilbert, Inc. Drawbridge. 3,396,822, 8-13-68, Cl. 187—98.
Guindon, Bertrand E.: *See—*
Nichols, Edward C., and Guindon. 3,396,755.
Gulf Oil Corp.: *See—*
Hamilton, Ellis W. 3,396,846.
Robicheaux, Warren J. 3,396,709.
Werner, James C. 3,397,263.
Gulf Research & Development Co.: *See—*
Kelly, Kenneth K., and Matthews. 3,397,239.
Kite, George F. 3,397,243.
Swift, Harold E. 3,397,194.
Guth, Jean Louis, and R. Wey, to Commissariat a l' Energie Atomique. Process for the elimination of anions from a solution. 3,397,142, 8-13-68, Cl. 210—24.
Gutzwiller, Walter R.: *See—*
Fahgman, Charles N., Gutzwiller, and Johnson. 3,396,711.
Guyot, Lucien F., and G. F. Peres, to Compagnie Francaise Thomson Houston-Hotchkiss Brandt. Biaxial electrostatic deflector. 3,397,341, 8-13-68, Cl. 313—17.
Haarmann, Dietrich, to Frisch Kabel- und Verseilmaschinenbau, G.m.b.H. Accumulator stranding machine with two sets of wheels. 3,396,526, 8-13-68, Cl. 57—66.
Haas, Ronald H.: *See—*
Moochhala, Yunus E., and Haas. 3,396,666.
Hafliger, Franz: *See—*
Gagneux, Andre R., and Hafliger. 3,397,209.
Hager, Nathaniel E., Jr., to Armstrong Cork Co. Electrical radiant heater having cellular air shield. 3,397,301, 8-13-68, Cl. 219—345.
Hahn, Paul T., to AMP Inc. Stock trimming apparatus. 3,396,568, 8-13-68, Cl. 72—335.
Halcon International, Inc.: *See—*
Fitzgerald, Francis A. 3,397,121.
Hale, James, to Tube Products Ltd. Induction tube welding apparatus. 3,397,295, 8-13-68, Cl. 219—8.5.
Hale, Jesse R. W., to General Connectors Corp. Connector for hot fluid conduits. 3,396,992, 8-13-68, Cl. 285—100.
Halek, George W., and F. M. Berardinelli, to Celanese Corp. Copolymerization and trioxane with an epoxy-containing comonomer in the presence of formaldehyde. 3,397,181, 8-13-68, Cl. 260—67.
Halkey-Roberts Corp.: *See—*
Mackal, Henry H., and Bogossian. 3,396,743.
Hall, James R., to Oldberg Mfg. Co. Silencer or muffler and method of producing same. 3,396,813, 8-13-68, Cl. 181—61.
Hall, Raymond L., to Martin G. Heller. Processing of transistor leads. 3,396,758, 8-13-68, Cl. 140—1.
Hall, William B. Pneumatic conveyors. 3,396,879, 8-13-68, Cl. 223—43.
Halliburton Co.: *See—*
Shelton, Robert Q., and Seay. 3,396,926.
Hamilton Cosco, Inc.: *See—*
Lay, Ralph B. 3,396,928.
Hamilton, Ellis W., to Gulf Oil Corp. Control of oil-water interface. 3,396,846, 8-13-68, Cl. 210—76.
Hamm, Philip C., to Monsanto Co. Method for controlling and eradicating insects with phosphoroamidate sterilants. 3,397,270, 8-13-68, Cl. 424—220.
Hamm, Philip C., to Monsanto Co. Methods for controlling or eradicating insects with quaternary amine sterilants. 3,397,275, 8-13-68, Cl. 424—329.
Hammond, Earl J., to Houdaille Industries, Inc. Chucking apparatus. 3,396,981, 8-13-68, Cl. 279—89.
Hanlein, Walter, and J. Rupprecht, to Siemens Aktiengesellschaft. Apparatus for determining the condensation temperature of a vapor in a gas. 3,396,574, 8-13-68, Cl. 73—17.
Hans, Richard G.: *See—*
Cunningham, David K., and Hans. 3,397,065.
Hansen, La Verne H.: *See—*
Brott, Joseph W. 3,396,469.
Hara, Kazumasa: *See—*
Nakajima, Yoshihiko, and Hara. 3,396,688.
Hardel, Hans-Joachim: *See—*
Sennewald, Kurt, Ohorodnik, Kirstein, and Hardel. 3,397,122.
Harnischfeger Corp.: *See—*
Stone, David W. 3,397,309.
Harrington, John H., and A. L. Prill, to The International Nickel Co., Inc. Method for producing flowable metal powders. 3,397,057, 8-13-68, Cl. 75—213.
Harris, Howard E.: *See—*
Hart, Richard D., and Harris. 3,397,054.
Harrison, John W.: *See—*
Strout, Russell B., and Harrison. 3,396,752.
Harrison, Terence T.: *See—*
Allenden, Dennis, and Harrison. 3,397,358.
Harrison, William B.: *See—*
Alholm, Wayne I., Boulton, and Harrison. 3,396,698.
Harrison, Mortimer J., to Valve Corporation of America. Stick-type applicator construction. 3,397,027, 8-13-68, Cl. 401—50.
Harrworth, Inc.: *See—*
Berman, Merril. 3,396,665.
Harsco Corp.: *See—*
Davidson, Frederic A., Jr., and Schalge. 3,396,498.
Hart, Richard D., and H. E. Harris, to Schering Corp. Process for controlling plant growth. 3,397,054, 8-13-68, Cl. 71—105.
Harwell, Edward M., to Litton Business Systems, Inc. Tactile keyboard. 3,396,827, 8-13-68, Cl. 197—98.
Hass, Robert H.: *See—*
Tulleners, Anthony J., and Hass. 3,397,034.
Hasselquist, Victor H., to The B. F. Goodrich Co. Apparatus for forming a laminated belt of plural plies of belt material. 3,397,104, 8-13-68, Cl. 156—351.
Hasten, Mark, F. Lobash, and D. L. Pommer, to General Mills, Inc. Extrusion apparatus. 3,396,676, 8-13-68, Cl. 107—14.
Hatada, Koichi: *See—*
Tanaka, Atsushi, Hozumi, and Hatada. 3,397,183.
Hatakeyama, Hiroyuki, and Y. Sugimoto to Kabushiki Kaisha Honda Gijutsu Kenkyusho. Fuel-delivering device for a portable engine. 3,396,748, 8-13-68, Cl. 137—587.
Haverberg, Russ, Co.: *See—*
Haverberg, Russell. 3,396,422.
Haverberg, Russell, to Russ Haverberg Co. Car mat washing machine. 3,396,422, 8-13-68, Cl. 15—308.
Hawk, Elwin A., Sr., to Coast Metals, Inc. Valve construction and control for powder feed. 3,396,746, 8-13-68, Cl. 137—329.05.
Hawthorn, Franklin A. Composite masking and trim tape. 3,396,838, 8-13-68, Cl. 206—59.
Hayes, Thomas, to K. S. Goldfarb. Child's vehicle propelled by jumping motion. 3,396,990, 8-13-68, Cl. 280—221.
Hazeltine Research, Inc.: *See—*
Loughlin, Bernard D. 3,397,281.
Head, Beverly P., Jr.: *See—*
Pearl, David L., Waller, and Head. 3,396,895.
Heberlein & Co., A.G.: *See—*
Dosch, Peter. 3,397,317.
Heberlein Patent Corp.: *See—*
Stutz, Otto T. 3,396,529.
Weiss, Ernst. 3,396,528.
Weiss, Ernst. 3,396,530.
Hecht, James L., and J. D. Polejes, to E. I. du Pont de Nemours & Co. Deglossed polyvinyl fluoride film structures. 3 397,108, 8-13-68, Cl. 161—189.
Heden, Carl-Goran, to Biotec Aktiebolag. Vibration device. 3,396,947, 8-13-68, Cl. 259—72.
Heden, Folke, ½ to A. J. D'Angelo. Coffee maker. 3,396,-654, 8-13-68, Cl. 99—314.
Hein, Ewald, and W. Kramer, to Siegener Maschinenbau G.m.b.H. Rotary shear for cropping and subdividing moving rolled material. 3,396,617, 8-13-68, Cl. 83—310.
Hein-Werner Corp.: *See—*
Witwer, Wallace J., and Wright. 3,396,860.
Heller, Martin G.: *See—*
Hall, Raymond L. 3,396,758.
Helsing, Erik, and N.-E. Strom, to Allmanna Svenska Elektriska Aktiebolaget. Device for indicating abnormal operating conditions in electrode furnaces. 3,397,277, 8-13-68, Cl. 13—13.
Henig, Seymour, and E. C. Palasky, to United States of America, Commerce. Information storage and category selector. 3,397,392, 8-13-68, Cl. 340—172.5.
Henry Valve Co.: *See—*
Jones, Evan. 3 396,940.
Her Britannic Majesty's Government of the United Kingdom, Minister of Aviation, of Great Britain and Northern Ireland: *See—*
Brown, Michael R., Nash, Phillips, and Shand. 3,397,316.
Hercules Inc.: *See—*
Lukach, Carl A., and Spurlin. 3,397,195.
Hermann, Loren E.: *See—*
Schrimper, Vernon L., and Hermann. 3,396,991.
Herzog, Hilmar, to Gustav Bauer. KG. Multilayer strap for wristwatches of thermoplastic material. 3,396,884, 8-13-68, Cl. 224—4.
Heskestad, Gunnar, to American Standard Inc. Fluid guiding method and apparatus. 3,396,738, 8-13-68, Cl. 137—13.
Hettich, Adam J., to James, Pond & Clark, Inc. High-pressure bleed valve. 3,396,939, 8-13-68, Cl. 251—253.
Hettinger, William P., Jr., to Malco Chemical Co. Ion exchange method of preparing quaternary ammonium compounds. 3,397,215, 8-13-68, Cl. 260—429.
Hewlett-Packard Co.: *See—*
Holloway, Joseph H., and Anderson. 3,397,310.
Heydkamp, Wolfgang, W. Kallert, E. Muller, and H. Freytag, to Farbenfabriken Bayer Aktiengesellschaft. Polyurethane plastics. 3,397,184, 8-13-68, Cl. 260—77.5.
Heyman Mfg. Co.: *See—*
Klumpp, Ferdinand, Jr. 3,397,280.

Hickerson, John E., and H. R. Kruspe, to International Business Machine Corp. Selection apparatus. 3,397,387, 8-13-68, Cl. 340—164.
Hickox, Walter A., to Aeroflex Laboratories Inc. Differential force-ratio transducer. 3,396,583, 8-13-68, Cl. 73—407.
Hicks, Darrell D., to Celanese Coatings Co. Polyurethane modified epoxy esters. 3,397,160, 8-13-68, Cl. 260—18.
Hicks, Harold E.: *See*—
  Foster, Lawrence E., and Hicks. 3,396,753.
Highleyman, Wilbur H., to Data Trends, Inc. Constant charge driving circuit for electrolytic recorders. 3,397,404, 8-13-68, Cl. 346—74.
Highton, Allan P., and J. B. Wheeldon, to Bowaters United Kingdom Paper Co. Ltd. Cylinder papermaking machine containing a water impervious cylinder. 3,397,112, 8-13-68, Cl. 162—318.
Hijii, Junichi: *See*—
  Fujita, Yasuhiro, and Hijii. 3,397,224.
Hildebrand, Fritz, to Stahlwerke Bruninghaus G.m.b.H. Machine for bending and hardening leaf springs. 3,396,956, 8-13-68, Cl. 266—6.
Hillander, Oscar H., and I. K. E. Jung. Arrangement in seagoing vessels driven by two counter-rotating propellers. 3 396,800, 8-13-68, Cl. 170—135.28.
Hillier, Kenneth W.: *See*—
  Eggleston, Philip W., Glen, Hillier, and Marshall. 3,396 446.
Hillstrom, Hugo F. Hot water brooder unit. 3,396,704, 8-13-68, Cl. 119—31.
Hinterthur, Helmut, and W. Pestel, to Licentia Patent-Verwaltungs-G.m.b.H. Stabilizer. 3,396,630, 8-13-68, Cl. 89—41.
Hirahara, Katsuji, to FMC Corp. Tomato peeling method. 3,396,769, 8-13-68, Cl. 146—231.
Hirsch, James A., to P. R. Mallory & Co., Inc. Timer. 3,397,-323, 8-13-68, Cl. 307—141.
Hitt, James J., and G. Mosley, to Leeds & Northrup Co. Modulators using field-effect transistors. 3,397,353, 8-13-68, Cl. 321—44.
Hobbs, Donald C., to Chas. Pfizer & Co. Inc. Process for the preparation of alkyl ethers of amino-alcohols. 3,397,238, 8-13-68, Cl. 260—584.
Hoeppel, Raymond W. Magnetic displacement transducer. 3,397,347, 8-13-68, Cl. 317—123.
Hoeppel, Raymond W. Proximity current detector. 3,397,348, 8-13-68, Cl. 317—123.
Hoffman, Howard S., to G & H Mechanical Laboratory, Inc. Apparatus for orienting cylindrical articles. 3,396,830, 8-13-68, Cl. 198—33.
Holloway, Joseph H., and J. W. Anderson, to Hewlett-Packard Co. Atomic beam apparatus. 3,397,310, 8-13-68, Cl. 250—41.3.
Holmes, George W., to The Dow Chemical Co. Rapid curing epoxy resin compositions. 3,397,157, 8-13-68, Cl. 260—2.
Holmes, Thomas: *See*—
  Edwards, Reginald H., and Holmes. 3,396,774.
Holtorf, Hans J., Jr.: *See*—
  Brott, Joseph W. 3,396,469.
Hooker Chemical Corp.: *See*—
  Cavanagh, Walter R. 3,397,092.
  Champaneria, Ashok J., and Russell. 3,397,090.
  Cull, Jay A. 3,397,123.
  Minklei, Alfred O., and Lecher. 3,397,038.
  Oswald, Anthony J., and Freeman. 3,397,093.
  Russell, William S. 3,397,091.
  Weil, Edward D., and Dorfman. 3,397,055.
Hope, Leiv. Device for treating large area surfaces. 3,396,423, 8-13-68, Cl. 15—312.
Hopkins, John G., and G. J. Glacken, to J. P. Stevens & Co., Inc. Method for texturizing yarns. 3,396,445, 8-13-68, Cl. 28—72.
Hori, Eiichi, and M. Uchida, to Kabushiki Kaisha Hitachi Seisakusho. Magnetohydrodynamic electric power generator. 3,397,330, 8-13-68, Cl. 310—11.
Hori, Saburo: *See*—
  May, Vivian G., and Hori. 3,397,005.
Horstkorta, Donald A.: *See*—
  Stosberg, Arturo E., and Horstkorta. 3,397,283.
Hosford, Harry W. Flexible sheet-like electric heater. 3,397,-302, 8-13-68, Cl. 219—528.
Hotger, Karl, to Gebr. Eickhoff, Maschinenfabrik und Eisengiesserei m.b.H. Rotary table packaging apparatus. 3,396,-509, 8-13-68, Cl. 53—258.
Houdaille Industries, Inc.: *See*—
  Hammond, Earl J. 3,396,981.
Houilleres du Bassin du Nord & du Pas-de-Calais: *See*—
  Fourcade, Robert, and Van De Walle. 3,397,170.
Houlton, George A. A., to British Straddle Carrier Co. Ltd. Straddle carrier vehicles. 3,396,861, 8-13-68, Cl. 214—392.
Houston Engineers, Inc.: *See*—
  Webb, Darrel D. 3,396,794.
Hovorak, William P. Earthmoving machine. 3,396,481, 8-13-68, Cl. 37—108.
Howlett, James W., to Howlett Machine Works. Concrete prestressing apparatus (jack). 3,396,943, 8-13-68, Cl. 254—77.
Howlett Machine Works: *See*—
  Howlett, James W. 3,396,943.
Hozumi, Yukio: *See*—
  Tanaka, Atsushi, Hozumi, and Hatada. 3,397,183.
Hubbard, Peter J., to Dorr-Oliver Inc. Thermal reactors. 3,396,680, 8-13-68, Cl. 110—8.
Hubbard, Peter J., to Dorr-Oliver Inc. Cyclonic reactor. 3,396,681, 8-13-68, Cl. 110—8.
Hudak, Stephen F.: *See*—
  Coats, Carlton E., Graver, and Hudak. 3,397,255.
Hughes Aircraft Co.: *See*—
  Winterbottom, Ross C. 3,397,401.
Hughes, Bill B., to Electronic Communications, Inc. Automatic range finder. 3,396,626, 8-13-68, Cl. 88—1.
Huml, James O.: *See*—
  Layne, Gilbert S., and Huml. 3,397,056.
Hummel, Donald G., and F. W. Swamer, to E. I. du Pont de Nemours and Co. Process for the preparation of hexafluoropropene. 3,397,248, 8-13-68, Cl. 260—653.5.
Humphreys & Glawgow Ltd.: *See*—
  Whetmore, Henry J. 3,396,781.
Humphreys, John, to Babcock & Wilcox Ltd. Steam and water separator. 3,396,513, 8-13-68, Cl. 55—201.
Hunt, Patrick H. Production of dislocation-free silicon single crystals. 3,397,042, 8-13-68, Cl. 23—301.
Hunter, James H., to The Upjohn Co. Process of treating herpes simplex with 1-D-arabinofuranosylcytosine. 3,397,-268, 8-13-68, Cl. 424—180.
Hurst, Thomas B., and R. G. Winklepleck, to The Babcock & Wilcox Co. Gas cleaning system. 3,396,514, 8-13-68, Cl. 55—227.
Hutchins, Alma A. Resilient cushion structure. 3,396,963, 8-13-68, Cl. 267—1.
Hutton, Billy. Jig for use with a machine tool. 3,396,613, 8-13-68, Cl. 77—55.
Hydro-Test, Inc.: *See*—
  Sjoberg, Robert E., Girala, Ryan, and Ross. 3,396,575.
I-T-E Circuit Breaker Co.: *See*—
  Garzon, Ruben. 3,397,350.
Ideal Corp.: *See*—
  Schaub, Edwin L. 3,396,439.
Igarashi, Isoji: *See*—
  Maehara, Shigeru, and Igarashi. 3,396,958.
Iguchi, Zin, to Koyo Seiko Co., Ltd. Grease sealed bearings. 3,396,977, 8-13-68, Cl. 277—94.
Iijima, Akira, to Denki Onkyo Co., Ltd. Light spot focussing device used for facsimile transmitting equipment. 3,397,282, 8-13-68, Cl. 178—6.
Iler, Ralph K., to E. I. du Pont de Nemours and Co. Polyamide fibers containing kaolinite and process of preparation. 3,397,171, 8-13-68, Cl. 260—37.
Imai, Susumu: *See*—
  Kamiya, Akima, Yoshimura, and Imai. 3,396,651.
Imperial Chemical Industries Ltd.: *See*—
  Barben, Ian K., and Eckersley. 3,397,207.
  Eggleston, Philip W., Glen, Hillier, and Marshall. 3,396,-446.
  Elmes, Albert W., and Raymond. 3,396,865.
  Mather, John, Stimpson, and O'Neill. 3,397,032.
  Tapley, John G. 3,397,125.
Ingelhard Industries, Inc.: *See*—
  Spooner, Howard E., and Bergmann. 3,396,461.
Innerspace Corp.: *See*—
  Gongwer, Calvin A. 3,396,406.
Institute of Gas Technology: *See*—
  Khan, Amanullah R., Eakin, and Anderson. 3,396,539.
Instituut voor toegepast Marktonderzoek: *See*—
  Schneider, Henry W. 3,397,402.
Interchemical Corp.: *See*—
  Burachinsky, Bohdan V., and Jacob. 3,397,074.
Interlake Steel Corp.: *See*—
  Brown, Fred L. 3,396,959.
  Kirsinas, Peter, and Plattner. 3,396,760.
International Business Machines Corp.: *See*—
  Abramson, Paul, Chin, and Stilwell. 3,397,388.
  Hickerson, John E., and Kruspe. 3,397,387.
  Ottaway, Gerald H., Painke, Scheler, Will, and Wright. 3,397,391.
  Palmateer, Paul H., and Pricer. 3,397,393.
International Environmental Dynamics: *See*—
  Contevita, John. 3,396,502.
International Latex Corp.: *See*—
  Sachs, Charles M., and Astor. 3,396,728.
International Milling Co., Inc.: *See*—
  Somers, Perrie D., Jr., and Mauseth. 3,397,066.
International Minerals & Chemical Corp.: *See*—
  Thomas, Walter J., Sr. 3,396,453.
International Nickel Co., Inc., The: *See*—
  Harrington, John H., and Prill. 3,397,057.
International Rectifier Corp.: *See*—
  Weinstein, Harold. 3,396,456.
International Standard Electric Corp.: *See*—
  Spicer, Lyndon R. 3,397,373.
International Telephone and Telegraph Corp.: *See*—
  Wakefield, George P., Vick, and Buckner. 3,397,308.
Ion Physics Corp.: *See*—
  Denholm, Alec S. 3,397,337.
Iowa Mfg. Co.: *See*—
  Schrimper, Vernon L., and Hermann. 3,396,991.
Irish, Meral C., to National Automatic Tool Co. Work sensing fixture and control system therefor. 3,396,493, 8-13-68, Cl. 51—53.
Irving, Kenneth: *See*—
  Balkin, Mark, Turner, and Irving. 3,396,978.
  Balkin, Mark, Turner, and Irving. 3,396,979.
Isgur, Irving E.: *See*—
  Goodman, Donald, Isgur, and Wacome. 3,397,165.
Ishii, Ryuichi, and H. Totani, to Nippon Electric Co., Ltd. Automatic answer-back system. 3,397,287, 8-13-68, Cl. 179—2.
Ishikawa, Tomio: *See*—
  Yoshida, Akinobu, Ishikawa, and Sano. 3,396,655.
Ishikawajima-Harima Jukogyo Kabushiki Kaisha: *See*—
  Tsunazawa, Mamoru. 3,396,690.
Isomet Corp.: *See*—
  Taylor, Thomas I., and Ruderman. 3,396,719.

Isted, Ronald F.: *See*—
  Bilson, Frank L., and Isted. 3,396,660.
Iten, Henry C., and D. H. Gieskieng; said Gieskieng, assor. to Allis-Chalmers Mfg. Co. Rotary kiln thermocouple collector ring and brush assembly. 3,396,581, 8-13-68, Cl. 73—351.
Ito, Tsunehiko, S. Nagaoka, and Y. Ochiai. Hose coupling for reinforced flexible hose. 3,396,994, 8-13-68, Cl. 285—248.
Jack The Yoeman Sales Ltd.: *See*—
  Bilson, Frank L., and Isted. 3,396,660.
Jäckering, Gunter. Means for comminuting thermoplastic materials. 3,396,913, 8-13-68, Cl. 241—52.
Jackson, Byron, Inc.: *See*—
  Grant, John C., and Taylor. 3,397,017.
Jackson, John E., to Ashland Oil and Refining Co. Process for preparing methyl-dialkylamines. 3,397,237, 8-13-68, Cl. 260—583.
Jackson Vibrators, Inc.: *See*—
  Roseberry, Wilmer W. 3,396,671.
Jacob, Walter E. W., to Telefonaktiebolaget L M Ericsson. Control current sensitive modulators. 3,397,368, 8-13-68, Cl. 332—43.
Jacob, Yuash P.: *See*—
  Burachinsky, Bohdan V., and Jacob. 3,397,074.
James, Noel: *See*—
  Falconer, Errol L., Kelly, and James. 3,397,096.
James, Pond & Clark, Inc.: *See*—
  Hettich, Adam J. 3,396,939.
Jan-Air, Inc.: *See*—
  Janette, John I. 3,396,904.
Janette, John I., to Jan-Air, Inc. Adjustable air inlet closure. 3,396,904, 8-13-68, Cl. 230—114.
Janome Sewing Machine Co., Inc.: *See*—
  Nakajima, Yoshihiko, and Hara. 3,396,688.
Jansson, Carl R., to Arenco Aktiebolag. Machine for producing tobacco product from a fluid tobacco pulp. 3,396,734, 8-13-68, Cl. 131—133.
Jansz, Joost W., to Richard Costain Ltd. Jacking systems for use in the construction of buildings. 3,396,944, 8-13-68, Cl. 254—89.
Jastram, Edward P., and H. M. Landis, to Texas Instruments Inc. Electrical temperature sensors with connected heat conductive means. 3,397,333, 8-13-68, Cl. 310—68.
Jeffery, Peter M.: *See*—
  Baxter, Allan S., Warriner, and Jeffery. 3,396,819.
Jeffrey Galion Mfg. Co.: *See*—
  Blubaugh, Otto J. 3,396,573.
Jenn-Air Corp.: *See*—
  Morrison, William E., and Painter. 3,396,652.
Jennings, Alan K., R. D. Cone, and E. Seld, to California Computer Products, Inc. Graphical data recorder system. 3,397,389, 8-13-68, Cl. 340—172.5.
Jennrich, George J., and W. A. Blann, to Allis-Chalmers Mfg. Co. Apparatus and process for producing calcined phosphate flakes. 3,396,952, 8-13-68, Cl. 263—32.
Jensen, Niels H., R. A. Westman, and E. L. Fogleman, to Lukens Steel Co. Apparatus for cast cladding. 3,396,778, 8-13-68, Cl. 164—275.
Jensen, Richard H., to Brownline Corp. Pallet construction. 3,396,678, 8-13-68, Cl. 108—51.
Johanson, Frans: *See*—
  Kubat, Josef, Pattyranie, Wahrem, Almin, Andersson, and Johanson. 3,396,850.
Johnson, Clayton C.: *See*—
  Fahgman, Charles N., Gutzwiller, and Johnson. 3,396,711.
Johnson, Douglas, to General Motors Corp. Ducted fan. 3,396,-905, 8-13-68, Cl. 230—122.
Johnson, Earl B. Rotary power lawn mower. 3,396,518, 8-13-68, Cl. 56—25.4.
Johnson & Johnson: *See*—
  Ziolko, Francis J. 3,396,426.
Johnson, Kenneth V., to Koehring Co. Subgrading machine. 3,396,643, 8-13-68, Cl. 94—39.
Johnston, Norman M. Stringed instrument construction. 3,396,622, 8-13-68, Cl. 84—318.
Johnston, Robert C., to Defiance-Azon Corp. Method and apparatus for evaluating the printing speed of diazotype materials. 3,397,315, 8-13-68, Cl. 250—83.3.
Jone, Arthur. Device for extending and retracting equipment under ice surfaces. 3,396,691, 8-13-68, Cl. 115—.5.
Jones, Edward S.: *See*—
  Kushnick, Julian H., Mears, and Jones. 3,397,103.
Jones, Evan, to Henry Valve Co. Packless valve with antifrost means. 3,396,940, 8-13-68, Cl. 251—335.
Jones, Frank N., to E. I. du Pont de Nemours and Co. Process for producing diethylenically unsaturated compounds. 3,397,252, 8-13-68, Cl. 260—680.
Jones, Fred E.: *See*—
  Knight, John V., and Jones. 3,396,465.
Jones, Frederick E., and J. V. Knight. Safety cap structure. 3,396,864, 8-13-68, Cl. 215—9.
Jones, Jean E.: *See*—
  Schwan, Judith A., and Jones. 3,397,060.
Jones, Leslie: *See*—
  Burns, Erwin, and Jones. 3,396,798.
Jones, Paul F.: *See*—
  McKibben, Horace E., and Jones. 3,396,521.
Joseph, Charles W., Jr., and K. H. Backhaus, to Celanese Corp. Ring travelers. 3,396,527, 8-13-68, Cl. 57—125.
Jung, Ingvar K. E.: *See*—
  Hillander, Oscar H., and Jung. 3,396,800.
Jung, Margarete: *See*—
  Bode, Hans, and Jung. 3,397,128.
Kabushiki Kaisha Honda Gijutsu Kenkyusho: *See*—
  Hatakeyama, Hiroyuki, and Sugimoto. 3,396,748.
Kabushiki Kaisha Hitachi Seisakusho: *See*—
  Hori, Eiichi, and Uchida. 3,397,330.
  Okano, Hiroshi. 3,397,312.
Kahler, Ernest J.: *See*—
  Kircher, John G., McFarling, Wyant, and Kahler. 3,397,-131.
Kahn, Herman: *See*—
  Gruber, Alvin V. 3,397,149.
Kaizerman, Samuel: *See*—
  Aloia, Romeo R., and Kaizerman. 3,397,193.
Kallert, Wilhelm: *See*—
  Heydkamp, Wolfgang, Kallert, Muller, and Freytag. 3,397,184.
Kamiya, Akima, H. Yoshimura, and S. Imai, to Mitsubishi Denki Kabushiki Kaisha. Kitchen ventilating device. 3,396,651, 8-13-68, Cl. 98—33.
Kampas, George S., and L. S. Wiswall, to Magnastatic Corp. Self-powered drive means. 3,396,585, 8-13-68, Cl. 74—3.52.
Kanegafuchi Boseki Kabushiki Kaisha: *See*—
  Kimura, Isao. 3,397,107.
Kaneko, Hisashi, and A. Sawai, to Nippon Electric Co., Ltd. Reception system using carrier detection for angularly modulated signals. 3,397,360, 8-13-68, Cl. 325—45.
Kaneko, Hisashi, to Nippon Electric Co., Ltd. Decoding device with a nonlinear companding characteristic. 3,397,-396, 8-13-68, Cl. 340—347.
Kanters, Hendrikus J.: *See*—
  De Jong, Cornelis P., and Kanters. 3,396,891.
Karr, Theodore J.: *See*—
  Podlipnik, John, Karr, and Fauber. 3,397,082.
Katz, Morris H., to The Pillsbury Co. Depectinized cocoa and frosting compositions containing the same. 3,397,061, 8-13-68, Cl. 99—26.
Kaufman, Arnold, S. H. Nusim, and W. A. Sklarz, to Merck & Co., Inc. Process for the monohalogenation of acetone. 3,397,240, 8-13-68, Cl. 260—593.
Kaufman, William. Footrest. 3,396,413, 8-13-68, Cl. 4—185.
Keene, Charles W.: *See*—
  Smith, Joseph W., and Keene. 3,396,962.
Kelly, Cornelius: *See*—
  Falconer, Errol L., Kelly, and James. 3,397,096.
Kelly, Ernest M.: *See*—
  Bloom, William, and Kelly. 3,396,832.
Kelly, Kenneth K., and J. S. Matthews, to Gulf Research & Development Co. Process for purifying 2-(1-cyclohexenyl) cyclohexanone by fractional crystallization. 3,397,239, 8-13-68, Cl. 260—586.
Kelly, William F. Shoeshine machines. 3,396,418, 8-13-68, Cl. 15—31.
Kemnitz, Robert H., and H. W. Winter, to Allis-Chalmers Mfg. Co. Fluid pressure operated adjustment and release for gyratory crushers and the like. 3,396,916, 8-13-68, Cl. 241—290.
Kendall Co., The: *See*—
  Mitchell, Philip A. 3,396,420.
Kennedy, Francis H.: *See*—
  Bowers, Grover W., and Kennedy. 3,396,811.
Kennedy, George D. Apparatus for use in picking tree grown fruit. 3,396,816, 8-13-68, Cl. 182—49.
Kennesaw Plastic Co.: *See*—
  Pearl, David L., Waller, and Head. 3,396,895.
Kenny, Ronald W. Food conveying apparatus for aircraft. 3,396,820, 8-13-68, Cl. 186—1.
Keown, Robert W.: *See*—
  Collette, John W., and Keown. 3,397,173.
Kern, Joseph F., A. B. Desnoes, and J. P. Adams, to Puregas Equipment Corp. Burner ignition system. 3,397,031, 8-13-68, Cl. 431—202.
Khan, Amanullah R., B. E. Eakin, and P. J. Anderson, to Institute of Gas Technology. Vapor barrier means for underground storage system. 3,396,539, 8-13-68, Cl. 61—.5.
Kilgore, William E., to Albemarle Paper Co. Refuse sack. 3,396,902, 8-13-68, Cl. 229—62.
Kimura Entetsu Kagaku Kikai Co., Ltd.: *See*—
  Nakai, Shiro. 3,397,141.
Kimura, Isao, to Kanegafuchi Boseki Kabushiki Kaisha. Composite polyamide filaments with improved potential crimpability and method of making the same. 3,397,107, 8-13-68, Cl. 161—173.
Kinsey, Robert J.: *See*—
  Diamond, Milton J., and Kinsey. 3,396,870.
Kipnis, Daniel D. Roller skate. 3,396,985, 8-13-68, Cl. 280—11.26.
Kircher, John G., J. L. McFarling, R. E. Wyant, and E. J. Kahler, to United States of America, Atomic Energy Commission. Method of preparing organotin compounds. 3,397,131, 8-13-68, Cl. 204—158.
Kirkbride, Willis J.: *See*—
  Bick, Gerald J., and Kirkbride. 3,396,897.
Kirsch, Bernhard. Heating units. 3,396,785, 8-13-68, Cl. 165—175.
Kirsinas, Peter, and R. F. Plattner, to Interlake Steel Corp. Strapping tool. 3,396,760, 8-13-68, Cl. 140—93.4.
Kirstein, Dieter: *See*—
  Sennewald, Kurt, Ohorodni, Kirstein, and Hardel. 3,397,-122.
Kisling, James W., III, to Schlumberger Technology Corp. Methods for manufacture of flexible valve elements. 3,396,-448, 8-13-68, Cl. 29—157.1.
Kissman, Henry M.: *See*—
  Winterbottom, Robert, Bitha, and Kissman. 3,397,230.
Kite, George F., to Gulf Research & Development Co. Process for the production of mercaptans and sulfides from alpha olefins. 3,397,243, 8-13-68, Cl. 260—609.
Klebe, Johann F., to General Electric Co. Silylating process and agent. 3,397,220, 8-13-68, Cl. 260—448.2.
Klein, Harvey S., to Shell Oil Co. Sulfone production. 3,397,-242, 8-13-68, Cl. 260—607.
Klein, Heinrich: *See*—
  Fracke, Aribert, Klein, Pieper, and Weber. 3,396,511.

Kliever, Waldo H.: *See*—
Little, Charles H., Kliever, and Wiemels. 3,396,679.
Kline, Charles M.: *See*—
Blanshine, Allison W., Kline, Focht, and Wallin. 3,396,-767.
Klingsberg, Erwin: *See*—
Mosby, William L., and Klingsberg. 3,397,217.
Klumpp, Ferdinand, Jr., to Heyman Mfg. Co. Self-locking grommet. 3,397,280, 8-13-68, Cl. 174—153.
Knapp, William F. Safety lock for automotive vehicles. 3,396,-999, 8-13-68, Cl. 292—39.
Knapsack Aktiengesellschaft: *See*—
Sennewald, Kurt, Ohorodnik, Kirstein, and Hardel. 3,397,122.
Knieriem, Herman, Jr., to The Dow Chemical Co. Protein base adhesive compositions with improved water resistance. 3,397,071, 8-13-68, Cl. 106—154.
Knight, John P. Recorder with ribbon-inking attachment. 3,396,829, 8-13-68, Cl. 197—171.
Knight, John V.: *See*—
Jones, Frederick E., and Knight. 3,396,864.
Knight, John V., and F. E. Jones. Safety razor guard. 3,396,-465, 8-13-68, Cl. 30—90.
Kocourek, Franz: *See*—
Fengler, Harald, Schausberger, and Kocourek. 3,396,964.
Koehring Co.: *See*—
Johnson, Kenneth V. 3,396,643.
Martinson, E. O. 3,396,642.
Kolbe, Joachim. Weld-fabricated structural member. 3,396,-989, 8-13-68, Cl. 280—106.
Koltuniak, Michael A., and T. N. Urquhart, to The Udylite Corp. Add-on cooling system. 3,396,780, 8-13-68, Cl. 165—47.
Koppers Co.: *See*—
Michalowicz, William A. 3,397,210.
Koppers Co., Inc.: *See*—
Appell, Herbert R. 3,397,245.
Parisse, Louis L. 3,397,124.
Koprowski, Hilary: *See*—
Fernandes, Mario V., Koprowski, and Wiktor. 3,397,267.
Korad Corp.: *See*—
Boyden, James H., and Laikin. 3,397,024.
Korst, James J., to Chas. Pfizer & Co., Inc. Refining of α-6-deoxy-5-oxytetracycline. 3,397,231, 8-13-68, Cl. 260—559.
Kortum, Alfred J.: *See*—
Brott, Joseph W. 3,396,469.
Kortum, Robert E., to Atlas Tool & Mfg. Co. Drive assembly for powered mower. 3,396,809, 8-13-68, Cl. 180—19.
Kosuge, Takashi: *See*—
Sasagawa, Ryusuke, Fujiwara, Kosuge, and Sano. 3,397,-089.
Kouwenhoven, Herman W.: *See*—
Aben, Pieter C., and Kouwenhoven. 3,397,249.
Kovach, Leslie J., and B. V. Menegus, to Modern Plastic Machinery Corp. Screw injector for plastic material. 3,396,-431, 8-13-68, Cl. 18—30.
Koyo Seiko Co., Ltd.: *See*—
Iguchi, Zin. 3,396,977.
Kozel, James A., to American Standard Inc. Plastic-metal valve. 3,396,848, 8-13-68, Cl. 210—137.
Kramer, Irvin R., and E. L. Strauss, to Martin-Marietta Corp. Thermoplastics exhibiting high viscosity at their decomposition temperatures. 3,397,168, 8-13-68, Cl. 260—37.
Kramer, Walter: *See*—
Hein, Ewald, and Kramer. 3,396,617.
Krekeler, Claude B., to The Cincinnati Mine Machinery Co. Cutter bits and means for mounting them. 3,397,012, 8-13-68, Cl. 299—86.
Krekeler, Claude B., to The Cincinnati Mine Machinery Co. Cutter bits and means for mounting them. 3,397,013, 8-13-68, Cl. 299—86.
Kriegistein, Walter, to Siemens Aktiengesellschaft. Method for producing superconductive layers. 3,397,084, 8-13-68, Cl. 117—217.
Kriesel, Marshall S., to Aerospace Systems Co. Load transfer device. 3,396,924, 8-13-68, Cl. 244—137.
Kroening, Charles A. Chain and sprocket assembly. 3,396,988, 8-13-68, Cl. 280—96.
Krogsrud, Harald, to Elektrokemisk A/S. Gas-curtained electric smelting furnaces and method of collecting reaction gases thereof. 3,396,954, 8-13-68, Cl. 263—50.
Kruse, Frederick W., Jr., and D. L. Baskins, to Kruse-Storke Electronics. Oscillator with separate voltage controls for narrow and wide range tuning. 3,397,365, 8-13-68, Cl. 331—102.
Kruse-Storke Electronics: *See*—
Kruse, Frederick W., Jr., and Baskins. 3,397,365.
Kruspe, Henry R.: *See*—
Hickerson, John E., and Kruspe. 3,397,387.
Kubat, Josef, C. Pattyranie, D. Wahrem, K. E. Almin, O. Andersson, and F. Johanson, to Rederiaktiebolaget Nordstjernan, Axel Johnson Institutet for Industriforskning I Nynashamn. Device for separation and fractionation of material dissolved or suspended in a liquid. 3,396,850, 8-13-68, Cl. 210—322.
Kuhnmunch, Walter: *See*—
Ney, Peter, and Kuhnmunch. 3,397,033.
Kulieke, Frederick C.: *See*—
Livelsberger, Kenneth V., and Kulieke. 3,396,673.
Kulka Electric Corp.: *See*—
Gombar, Andrew J. 3,397,376.
Kuntz, William D. Fishing fly. 3,396,485, 8-13-68, Cl. 43—44.8.
Kurihara, Shinji, to Bibun Machine Construction Co., Ltd. Apparatus and method for separating meat from bone. 3,396,768, 8-13-68, Cl. 146—222.

Kushnick, Julian H., W. H. Mears, and E. S. Jones, to Allied Chemical Corp. Chlorotrifluoroethylene copolymer solvent systems. 3,397,103, 8-13-68, Cl. 156—307.
Kuts, Richard M.: *See*—
Miller, Robert P., and Kuts. 3,396,615.
Kyowa Hakko Kogyo Co., Ltd.: *See*—
Fujimoto, Yasuo, and Teranishi. 3,397,129.
Laikin, Milton: *See*—
Boyden, James H., and Laikin. 3,397,024.
Lakin, Hubert W., and H. M. Nakagawa, to United States of America, Interior. Spectrophotometric method for the determination of gold. 3,397,040, 8-13-68, Cl. 23—230.
Lamberton, Bruce A. Means and method for constructing sand drains in the earth's surface. 3,396,541, 8-13-68, Cl. 61—11.
Lamberton, Bruce A., to Construction Techniques, Inc. Method and arrangements for protecting shorelines. 3,396,542, 8-13-68, Cl. 61—38.
Lamberton, Bruce A., to Construction Techniques, Inc. Method of forming concrete bodies. 3,396,545, 8-13-68, Cl. 61—47.
Lamberton, Bruce A., to Construction Techniques, Inc. Method for encasing rigid members with concrete. 3,397,260, 8-13-68, Cl. 264—86.
Land, Edwin H., to Polaroid Corp. Photographic apparatus, product and process. 3,396,646, 8-13-68, Cl. 95—13.
Land, Edwin H., to Polaroid Corp. Light apertures. 3,397,-023, 8-13-68, Cl. 350—160.
Lande, Arnold J., and C. W. Lillehei, to The Regents of the University of Minnesota. Membrane oxygenator-dialyzer. 3,396,849, 8-13-68, Cl. 210—321.
Landenberger, Hilbert H. Tarp roller. 3,397,009, 8-13-68, Cl. 296—100.
Landis, Harry M.: *See*—
Jastram, Edward P., and Landis. 3,397,333.
Lankheet, Jay A., to Glamour Pools, Inc. Swimming pool construction. 3,396,500, 8-13-68, Cl. 52—169.
Larsson, Oscar U.: *See*—
Stahl, Nils E. J., and Larsson. 3,396,657.
Laswell, Samuel W., to Shell-Globe Corp. Method and apparatus for producing a reticulated wire structure. 3,396,-761, 8-13-68, Cl. 140—112.
Lauze, Robert L., to Navan Products, Inc. Tensioned internal diameter cutting wheel assembly. 3,396,714, 8-13-68, Cl. 125—15.
Lawrence, Roland B., to The Deutsch Co. Electronic Components Div. Arrangement for electrical terminals. 3,397,-384, 8-13-68, Cl. 339—258.
Lay, Ralph B., to Hamilton Cosco, Inc. Leg mounting. 3,396,-928, 8-13-68, Cl. 248—188.6.
Layne, Gilbert S., and J. O. Huml, to The Dow Chemical Co. Separation of aluminum from impure aluminum sources. 3,397,056, 8-13-68, Cl. 75—68.
Lazan, B. J.: *See*—
Lazan, Benjamin J. 3,396,612.
Lazan, Benjamin J., to B. J. and J. W. Lazan, and First National Bank of Minneapolis. Adjustable reciprocatory mechanism. 3,396,612, 8-13-68, Cl. 74—837.
Lazan, Jeannette W.: *See*—
Lazan, Benjamin J. 3,396,612.
Lear Siegler, Inc.: *See*—
Delforce, Cedric G., and Donnellan. 3,397,016.
Leblanc, Michel. Volumetric machine suitable for operation as pump, engine, or motor pump. 3,396,632, 8-13-68, Cl. 91—60.
Lecher, Hans Z.: *See*—
Minklei, Alfred O., and Lecher. 3,397,038.
Leeds & Northrup Co.: *See*—
Bishup, Bernard W., Repeta, and Giarrizzo. 3,397,386.
Hitt, James J., and Mosley. 3,397,353.
Lees, James, & Sons Co.: *See*—
Nowicki, Henry F. 3,396,687.
Lehman, Robert E. Height adjustment mechanism for power mower vehicles. 3,396,519, 8-13-68, Cl. 56—25.4.
Leimgruber, John. Collapsible chair device. 3,397,010, 8-13-68, Cl. 297—174.
Lemelson, Jerome H. Reflecting devices. 3,396,639, 8-13-68, Cl. 94—1.5.
Lennox Industries, Inc.: *See*—
Cawley, Richard E. 3,396,550.
Leonard, Frederick: *See*—
Doebel, Karl J., and Leonard. 3,397,272.
Lepisto, John G., to Albemarle Paper Co. Process and apparatus for the manufacture of multi-ply bags. 3,396,638, 8-13-68, Cl. 93—20.
Les Laboratoires Albert Rolland: *See*—
Valette, Raymond. 3,397,212.
Levine, Leonard, to The Dow Chemical Co. Phenylhydrazinopropanethiols. 3,397,235, 8-13-68, Cl. 260—569.
Leyer, Alfred, to W. R. Grace & Co. Cold saw. 3,396,618, 8-13-68, Cl. 83—470.
Licentia Patent-Verwaltungs G.m.b.H.: *See*—
Hinterthur, Helmut, and Pestel. 3,396,630.
Liebman, Arno J., to Centriblast Corp. Machine for disintegrating paper and other waste materials. 3,396,914, 8-13-68, Cl. 241—63.
Liem, Tjing H.: *See*—
Ergenc, Mehmet S., and Liem. 3,396,784.
Lillehei, Clarence W.: *See*—
Lande Arnold J., and Lillehei. 3,396,849.
Lilly, Eli and Co.: *See*—
Van Heyningen, Earle M., and Taylor. 3,397,273.
Lindaberry, Harold L., to Pennsalt Chemicals Corp. Control of plant life. 3,397,048, 8-13-68, Cl. 71—66.
Lindberg, Albert W., Jr. Combined aeration and hydrotherapy apparatus. 3,396,722, 8-13-68, Cl. 128—66.
Lipp, Gerhard: *See*—
Von Bethmann, Max F., Lipp, and Bayer. 3,396,735.
Lissant, Kenneth J., and T. J. Bellos, to Petrolite Corp. Hybrid fuel II. 3,396,537, 8-13-68, Cl. 60—210.

Litteer, Abert C.: *See*—
Banks, Bradford H. 3,396,644.
Little, Charles H., W. H. Kliever, and E. L. Wiemels, to Universal Drafting Machine Corp. Drafting-digitizing apparatus. 3,396,679, 8-13-68, Cl. 108—144.
Little, John R., and E. A. Sanford, to Pfaudler, Ritter Corp. Semicrystallized ground coats and enameled articles manufactured therefrom. 3,397,076, 8-13-68, Cl. 117—70.
Little, Thomas W., and R. E. Finken, to Phillips Petroleum Co. Apparatus for injecting and withdrawing fluids from a well. 3,396,797, 8-13-68, Cl. 166—105.
Litton Business Systems, Inc.: *See*—
Harwell, Edward M. 3,396,827.
Liu, David Y., to Nalco Chemical Co. Control of microorganisms in industrial process waters. 3,397,144, 8-13-68, Cl. 210—62.
Livelsberger, Kenneth V., and F. C. Kulieke, to Amsted Industries, Inc. Articulate railway car connector and truck. 3,396,673, 8-13-68, Cl. 105—4.
Lobash, Floyd: *See*—
Hasten, Mark, Lobash, and Pommer. 3,396,676.
Lock, Walter E.: *See*—
Pfost, Robert F., and Lock. 3,397,289.
Locke, John P., to F. W. Dwyer Mfg. Co. Differential pressure indicator and switch. 3,397,319, 8-13-68, Cl. 250—231.
Loeb, William E.: *See*—
Cariou, Frank E., Loeb, and Valley. 3,397,085.
Loibl, Johann: *See*—
Schreler, Kurt, and Loibl. 3,396,945.
Lonati, Francesco. Yarn cutting device for circular knitting machines. 3,396,559, 8-13-68, Cl. 66—134.
Long, Edward M.: *See*—
Dill, Charles L., Jr. 3,397,342.
Lopata, Ira L. Apparatus and method for making looped ribbon ornaments. 3,396,880, 8-13-68, Cl. 223—46.
Lopez, Romeo, and J. A. Clarke, to The Dow Chemical Co. Rapid curing epoxy resin compositions. 3,397,156, 8-13-68, Cl. 260—2.
Lorillard, P. Co.: *See*—
Allseits, Frank, and Doblin. 3,396,733.
Loughlin, Bernard D., to Hazeltine Research, Inc. Chrominance signal processing apparatus. 3,397,281, 8-13-68, Cl. 178—5.4.
Louks, Theodric W., and R. E. McLin, to Mi-Continent Mfg., Co. Thermometer assembly. 3,396,582, 8-13-68, Cl. 73—376.
Louthan, Rector P., to Phillips Petroleum Co. Process for production of diaryl and di(alkaryl) sulfides. 3,397,244, 8-13-68, Cl. 260—609.
Loux, Harvey M., to E. I du Pont de Nemours and Co. Herbicidal method. 3,397,050, 8-13-68, Cl. 71—92.
Lovejoy, Charles K., to Scripto, Inc. Burner valve with impinging means. 3,397,029, 8-13-68, Cl. 431—152.
Lovejoy Flexible Coupling Co.: *See*—
Giegerich, Raymond W. 3,396,556.
Lowry Development Corp.: *See*—
Strout, Russell B., and Harrison. 3,396,752.
Lucas, Malcolm B., to The Procter & Gamble Co. Tear tape for plastic packaging materials. 3,396,900, 8-13-68, Cl. 229—51.
Luckey, Heribert, and F. Winkelmann. Curtain runner holding device. 3,396,834, 8-13-68, Cl. 206—46.
Luethi, Christian, H. R. Biland, and M. Duennenberger, to Ciba Limited. Aryl-1,3,5-triazines. 3,397,205, 8-13-68, Cl. 260—248.
Lukach, Carl A., and H. M. Spurlin, to Hercules Inc. Preparation of α-olefin polymers in finely divided form. 3,397,-195, 8-13-68, Cl 260—93.7.
Lukens Steel Co.: *See*—
Jensen, Niels H., Westman and Fogleman. 3,396,778.
MVR Corp.: *See*—
Pfost, Robert F., and Lock. 3,397,289.
Stosberg, Arturo E., and Horstkorta. 3,397,283.
M & W Gear Co.: *See*—
Meiners, Elmo R. 3,396,685.
Maass, Hans W., and F. K. Sender, to Prakla Gesellschaft fur Praktische Lagerstattenforschung G.m.b.H. Method and apparatus for radio navigation. 3,397,400, 8-13-68, Cl. 343—112.
Maatsch, Jurgen, and K. Borowski, to Beteiligungs- und Patentverwaltungsgesellschaft mit beschrankter Haftung. Method of and apparatus for inspection and control of the reaction performance during the oxygen blowing process. 3,396,960, 8-13-68, Cl. 266—34.
Mackal, Henry H., and A. Bogossian, to Halkey-Roberts Corp. Oral inflation valve. 3,396,743, 8-13-68, Cl. 137—223.
Macklem, F. Sutherland, to Equipment Development Corp. Electrophotographic printing apparatus. 3,396,645, 8-13-68, Cl. 95—1.7.
Maclin, Ernest, and J. L. Bradshaw, to General Precision Systems Inc. Slip ring. 3,396,586, 8-13-68, Cl. 74—5.
Maddock, William E., ½ to Garrel O. Day. Attachment for a backhoe or other vehicle. 3,396,946, 8-13-68, Cll. 254—189.
Maeda, Hisaaki: *See*—
Maeda, Hisao. 3,397,394.
Maeda, Hisao, deceased (Hisaaki Maeda, heir). Thin film magnetic core matrix memory device. 3,397,394, 8-13-68, Cl. 340—174.
Maeder, Arthur: *See*—
Toepfl, Rosemarie, and Maeder. 3,397,190.
Maehara, Shigeru, and I. Igarashi, to Yawata Iron & Steel Co., Ltd., and Yokoyama Engineering Co., Ltd. Apparatus for recovering an unburnt waste gas in an oxygen top-blowing converter. 3,396,958, 8-13-68, Cl. 266—31.
Maenaka Valve Works Co., Ltd.: *See*—
Matsui, Teruhiko. 3,396,938.
Magikitch'n Equipment Corp.: *See*—
Weyland, Carl M., and Getz. 3,396,716.

Magin Desveus Duran: *See*—
Ballbe, Mariano. 3,896,757.
Magna Corp.: *See*—
Muggee, Fred D. 3,396,792.
Magnastatic Corp.: *See*—
Kampas, George S., and Wiswall. 3,396,585.
Magnesita S.A.: *See*—
De Oliveira, Luiz R. 3,396,504.
Mahe, Andre Y., to North American Philips Co., Inc. Vacuum device. 3,396,548, 8-13-68, Cl. 62—55.5.
Makepeace, Edwin H., Jr., to Chas. Pfizer & Co., Inc. Streptomycin reduction process. 3,397,197, 8-13-68, Cl. 260—210.
Malco Chemical Co.: *See*—
Hettinger, William P., Jr. 3,397,215.
Mallory, P. R. & Co., Inc.: *See*—
Hirsch, James A. 3,397,323.
Pomerantz, Daniel I. 3,397,278.
Malone, Carl E., to The AFA Corp. of Florida. Positive action dispensing valve. 3,396,874, 8-13-68, Cl. 222—402.1.
Maloney, Bernard, to Amsted Industries, Inc. Retaining rib and pin for third rail contact shoe. 3,397,291, 8-13-68, Cl. 191—49.
Maltby, Jack: *See*—
Alsop, James F., and Maltby. 3,396,566.
Manning, William F., to Mobil Oil Corp. Storage tank fixed on the ocean bottom and method of installation. 3,396,544, 8-13-68, Cl. 61—46.
Marbach, Walter V.: *See*—
Urbutis, Algimantas P., Schenk, Risany, and Marbach. 3,397,069.
Marc Wood Societe Anonyme pour la Promotion des Echanges Techniques Internationaux: *See*—
Gewiss, Lucien V 3,397,261.
Marks, Cornelis J. A. T.: *See*—
Reinhoudt, Jacobus P., Marks, and Van Beukering. 3,396,-976.
Marshall, Ian: *See*—
Eggleston, Philip W., Glen, Hillier, and Marshall, 3,396-446.
Marshall, John D.: *See*—
Nichols, Edward C., and Guindon. 3,396,755.
Marsheck, Robert M.: *See*—
Begley, John W., and Marsheck. 3,397,247.
Martin-Marietta Corp.: *See*—
Kramer, Irvin R., and Strauss. 3,397,168.
Martinek, Robert G., to Basis Products Corp. Diffusion furnace with transport means. 3,396,955, 8-13-68, Cl. 266—1.
Martinek, Thomas W., to Union Oil Co. Electroviscous fluid composition. 3,397,147, 8-13-68, Cl. 252—78.
Martinek, Thomas W., to Union Oil Co. of California. Method for corrugating and compressing flexible tubing. 3,397,264, 8-13-68, Cl. 264—287.
Martini, Mario: *See*—
Simanek, Edward J., and Martini. 3,396,823.
Martinson, E. O., to Koehring Co. Subgrading machine. 3,396,642, 8-13-68, Cl. 94—39.
Martorana, Giovanni: *See*—
Boschi, Antonio, and Martorana. 3,396,555.
Maryland Cup Corp.: *See*—
Brown, Jon. 3,396,857.
Maschinenfabrik Hasenclever A.G.: *See*—
Bachmann, Horst. 3,396,567.
Massey, Lloyd H., and H. Slavings. Tractor apparatus. 3,396,-983, 8-13-68, Cl. 280—5.
Mast, Fred, to Gretag Aktiengesellschaft. Apparatus for transducing infra-red images into visible images utilizing a liquid light control layer. 3,397,313, 8-13-68, Cl. 250—83.
Masters, Arlo B. Leveling device. 3,396,927, 8-13-68, Cl. 248—188.2.
Mather, John, J. W. Stimpson, and W. A. O'Neill, to Imperial Chemical Industries, Ltd. Coloration of polyolefins. 3,397,-032, 8-13-68, Cl. 8—100.
Matsui, Teruhiko, to Maenaka Valve Works Co., Ltd. Valve actuating device. 3,396,938, 8-13-68, Cl. 251—229.
Matsuda, Ken: *See*—
Sedlak, John A., and Matsuda. 3,397,180.
Matsushita Electric Industrial Co., Ltd.: *See*—
Yoshida, Akinobu, Ishikawa, and Sano. 3,396,655.
Matthews, Joseph S.: *See*—
Kelly, Kenneth K., and Matthews. 3,397,239.
Matz, Samuel A., to The Borden Co. Refrigerated dough product. 3,397,064, 8-13-68, Cl. 99—90.
Mauseth, Robert E.: *See*—
Somers, Perrie D., Jr., and Mauseth. 3,397,066.
May, Vivian G., and S. Hori, to Checker Motors Corp. Automobile with robbery preventing partition. 3,397,005, 8-13-68, Cl. 296—24.
Mayberry, Thomas C., to E. I. du Pont de Nemours and Co. Antioxidant-containing textile lubricant, process for preparing nylon tire cord therewith and the resulting cord. 3,397,-081, 8-13-68, Cl. 117—139.5.
Maxwell, Palmer M. Proximity-magnetic means for operating microswitches. 3,397,372, 8-13-68, Cl. 335—205.
Mazur, Paul A., to Diamond Shamrock Corp. Process for preparing sodium methyl arsonate. 8,397,218, 8-13-68, Cl. 260—442.
McAfee, Joseph A.: *See*—
Bowen, Eldred W., and McAfee. 3,396,842.
McCabe-Powers Body Co.: *See*—
Balogh, Roy O., and Bakula. 3,396,852.
McCann, Gerald P., to McCann's Engineering & Mfg. Co. Beverage dispensing unit. 3,396,871, 8-13-68, Cl. 222—76.
McCann's Engineering & Mfg. Co.: *See*—
McCann, Gerald P. 3,396,871.
McCardell, Willard B., to Michigan Tool Co. Non-generating tooth forming apparatus. 3,396,570, 8-13-68, Cl. 72—399.
McCarroll, Raymond A., to Studebaker Corp. Tire stud. 3,396,-772, 8-13-68, Cl. 152—210.

McCorry, Arthur E., to Atomic Energy of Canada Ltd. Induction heating apparatus. 3,397,297, 8–13–68, Cl. 219—10.69.
McCrudden, Edward, to Edson Machinery Ltd. Carton packer. 3,396,505, 8–13–68, Cl. 53—61.
McDonnell, Douglas Corp.: *See*—
  Berger, Carl, and Arrance. 3,397,088.
McDougall, Franklin M., to Standard Machine & Mfg. Co. Latch mechanism for spray gun. 3,396,937, 8–13–68, Cl. 251—107.
McFarling, James L.: *See*—
  Kircher, John G., McFarling, Wyant, and Kahler. 3,397,131.
McFedries, Robert, Jr., to The Dow Chemical Co. Container. 3,396,901, 8–13–68, Cl. 229—55.
McGrath, William L., to Carrier Corp. Multiple-effect absorption refrigeration systems. 3,396,549, 8–13–68, Cl. 62—101.
McKibben, Horace E., and P. F. Jones, to Blueberry Equipment, Inc. Harvesting machine for row crops such as blueberries. 3,396,521, 8–13–68, Cl. 56—330.
McLain, William R., to United States Steel Co. Basic refractory furnace structure. 3,396,684, 8–13–68, Cl. 110—99.
McLean, John A.: *See*—
  Merryweather, John P., McLean, and Field. 3,397,095.
McLin, Ronald E.: *See*—
  Louks, Theodric W., and McLin. 3,396,582.
McMinn, Robert E., and C. C. Dougherty, Jr., to Black, Sivalls & Bryson, Inc. Method and apparatus for the treatment of liquids. 3,396,512, 8–13–68, Cl. 55—170.
McNeil Laboratories, Inc.: *See*—
  Plostnieks, Janis. 3,397,202.
Mears, Whitney H.: *See*—
  Kushnick, Julian H., Mears, and Jones. 3,397,103.
Mecum, William D., to Abex Corp. Resins containing the repeating benzothiazole structure. 3,397,187, 8–13–68, Cl. 260—79.
Meier, Ernst, to A. Teves. Disk brake with axial displacement limit means for brake shoes. 3,396,824, 8–13–68, Cl. 188—73.
Meier-Windhorst, Christian A. Process for the continuous heat treatment of lengths of textiles and the like. 3,396,415, 8–13–68, Cl. 8—149.3.
Meiners, Elmo R., to M & W Gear Co. Auxiliary fertilizer applicator. 3,396,685, 8–13–68, Cl. 111—7.
Meitinger, Heinz, and J. Egger, to The United States Time Corp. Dial train drive. 3,396,531, 8–13–68, Cl. 58—28.
Melrose, Denis G., to National Research Development Corp. Artificial heart valve. 3,396,409, 8–13–68, Cl. 3—1.
Menardi & Co.: *See*—
  Ballard, Wade E. 3,396,516.
Mencacci, Samuel A. Process to stimulate the peristaltic movements and device therefor. 3,396,721, 8–13–68, Cl. 128—41.
Menegus, Bruno V.: *See*—
  Kovach, Leslie J., and Menegus. 3,396,431.
Meng, Eberhard, and D. K. Neeld, to Electro-Therm, Inc. Electrical heating elements and method and apparatus for making the same. 3,396,458, 8–13–68, Cl. 29—615.
Menton, Jack K. Rotary-impact drill. 3,396,807, 8–13–68, Cl. 175—293.
Mercantile Marine Engineering & Graving Docks Co.: *See*—
  Schenck, Robert A. M. 3,396,492.
Merck & Co., Inc.: *See*—
  Gal, George. 3,397,211.
  Kaufman, Arnold, Nusim, and Sklarz. 3,397,240.
Merijan, Ashot: *See*—
  Grosser, Frederick, and Merijan. 3,397,192.
Merryweather, John P., J. A. McLean, and T. D. Field, to American Cyanamid Co. Gelled aqueous explosive composition having hydrogen cyanamide as anti-freezing agent. 3,397,095, 8–13–68, Cl. 149—39.
Merten, Rudolf, W. Dunwald, K.-H. Mielke, and E. Reese, to Farbenfabriken Bayer Aktiengesellschaft. Polyhydantoin polymer prepared by the reaction of glycine derivatives and polyisocyanates. 3,397,253, 8–13–68, Cl. 260—830.
Metcalfe, Richard T., to American Optical Co. Spectacle hinge. 3,396,425, 8–13–68, Cl. 16—128.
Metzger, Clarence J.: *See*—
  Day, Roger E., Metzger, and Stella. 3,397,019.
Metzker, Edward R., and S. J. Green, to Champion Spark Plug Co. Inductive device for centering a punch within its die. 3,397,357, 8–13–68, Cl. 324—34.
Meyer, Geo. J., Mfg. Co.: *See*—
  Copping, Bruce G. 3,396,841.
Michael, Elmer W.: *See*—
  Carlson, Paul O., and Michael. 3,397,063.
Michael, Harold E. Progressive burning firearm propellant. 3,396,661, 8–13–68, Cl. 102—103.
Michalowicz, William A., to Koppers Co. Process for preparing maleimides using a solid phase acidic alumina-containing catalyst. 3,397,210, 8–13–68, Cl. 260—326.5.
Michigan Tool Co.: *See*—
  McCardell, Willard B. 3,396,570.
Microwave Associates, Inc.: *See*—
  Uhlir, Arthur, Jr. 3,397,369.
Mid-Continent Mfg. Co.: *See*—
  Louks, Theodric W., and McLin. 3,396,582.
Mielke, Karl-Heinz: *See*—
  Merten, Rudolf, Dunwald, Mielke, and Reese. 3,397,253.
Milburn, Roy F. Flag-adjusting assembly for flagpole. 3,396,695, 8–13–68, Cl. 116—173.
Millhiser, Robert G., and W. W. Wooll, Jr., to Ajem Laboratories, Inc. Vortical separator. 3,396,844, 8–13–68, Cl. 209—211.
Miller, Leonidas C. Apparatus for bending metal tubing. 3,396,565, 8–13–68, Cl. 72—216.
Miller, Lewis S., to The Dow Chemical Co. Resinous condensation products of aminopolyamides and halomethyldiphenyl ether. 3,397,161, 8–13–68, Cl. 260—18.
Miller, Peter J., to Toledo Heater Co. Method of bending tubular workpieces. 3,396,569, 8–13–68, Cl. 72—369.
Miller, Richard L. Ski binding having frangible heel engaging member. 3,396,986, 8–13–68, Cl. 280—11.35.
Miller, Robert P., and R. M. Kuts, to The Falls Engineering & Machine Co. Ribbon guide take-up for splitting machinery. 3,396,615, 8–13–68, Cl. 83—4.
Miller, Wendell E., N. L. Walter, and R. K. Tessmann, to The Cessna Aircraft Co. Hydraulic transmission. 3,396,536, 8–13–68, Cl. 60—53.
Milos, Louis W. Engine exhaust system. 3,396,535, 8–13–68, Cl. 60—30.
Minar, Heinz: *See*—
  Geyer, Herbert, and Minar. 3,396,506.
Miner Industries Inc.: *See*—
  Bloom, William, and Kelly. 3,396,832.
Minklei, Alfred O., and H. Z. Lecher, to Hooker Chemical Corp. Manufacture of a reactive trisodium phosphide. 3,397,038, 8–13–68, Cl. 23—204.
Minnesota Mining and Mfg. Co.: *See*—
  Erickson, John G. 3,397,189.
  Fehner, Robert H. 3,397,073.
  Schmelzle, Ambrose F., and Sauer. 3,396,837.
Minnick, Robert C., to Stanford Research Institute. Logic array for associative memory. 3,397,390, 8–13–68, Cl. 340—172.5.
Mitchell, Philip A., to The Kendall Co. Lithographic wiping pad. 3,396,420, 8–13–68, Cl. 15—210.
Mitsubishi Denki Kabushiki Kaisha: *See*—
  Kamiya, Akima, Yoshimura, and Imai. 3,396,651.
Mitsui Petrochemical Industries, Ltd.: *See*—
  Fujita, Yasuhiro, and Hijii. 3,397,224.
Miyoshi, Shigeto; Japan: *See*—
  Takigawa, Bin, and Sakamoto. 3,397,162.
Mobay Chemical Co.: *See*—
  Britain, J. W. and Gemeinhardt. 3,397,158.
Mobil Oil Corp.: *See*—
  Dean, James T. 3,396,789.
  Manning, William F. 3,396,544.
  Naro, Paul A., and Offenhauer. 3,397,155.
  Wilkinson, William H., and Thorson. 3,396,605.
Modern Plastic Machinery Corp.: *See*—
  Kovach, Leslie J., and Menegus. 3,396,431.
Moeller, Alonzo R. Vehicle course and turn timer apparatus. 3,397,385, 8–13–68, Cl. 340—23.
Monarch Forge and Machine Works, Inc.: *See*—
  Rickert, Edward N., Jr. 3,387,111.
Monitor Mfg., Inc.: *See*—
  Gruber, George E. 3,396,694.
Monotype Corp Ltd., The: *See*—
  Scott, Stanley G., and England. 3,396,831.
Monsanto Co.: *See*—
  Gaertner, Van R. 3,397,204.
  Hamm, Philip C. 3,397,270.
  Hamm, Philip C. 3,397,275.
  Schultz, Robert G. 3,397,214.
  Shen, Chung Y., and Stahlheber. 3,397,035.
  Symes, William F., and Vazopolos. 3,397,203.
Monsanto Research Corp.: *See*—
  Cornell, John H., Jr. 3,397,271.
Montecatini Edison S.p.A.: *See*—
  Smai, Franco, and Salvemini. 3,397,241.
Moochhala, Yumus E., and R. H. Haas, to Borg-Warner Corp. Transmission with variable volume vane pump. 3,396,666, 8–13–68, Cl. 103—120.
Moore, Warren T., to Brown & Root, Inc. Fluid handling apparatus including a reel. 3,396,747, 8–13–68, Cl. 137—355.21.
Moores, Robert G., Jr., to The Black and Decker Mfg. Co. Adjustable slip clutch for rotary tools. 3,396,557, 8–13–68, Cl. 64—30.
Moores, Robert G., Jr., to The Black and Decker Mfg. Co. Transmission and clutch for rotary tool. 3,396,593, 8–13–68, Cl. 74—371.
Moragne, Edward L. Animal stand. 3,396,818, 8–13–68, Cl. 182—187.
Morcombe, Peter H.: *See*—
  Barnaby, Bernard S., Ward, and Morcombe. 3,397,371.
Morris, James W., and H. T. Crossley, to Packaging Frontiers, Inc. Containerization of tetrahedron-shaped packages. 3,396,507, 8–13–68, Cl. 53—142.
Morrison, William E., and P. Painter, to Jenn-Air Corp. Ventilating skylight with heat-vent. 3,396,652, 8–13–68, Cl. 98—43.
Morse, John E., and W. C. Thomas, to Eastman Kodak Co. Information storage and retrieval apparatus. 3,396,732, 8–13–68, Cl. 129—16.1.
Mosby, William L., and E. Klingsberg, to American Cyanamid Co. Substituted dithiarsols and dithiastiboles. 3,397,217, 8–13–68, Cl. 260—440.
Moseley, Walter W., Jr., to E. I. du Pont de Nemours and Co. Microcellular laminate. 3,397,106, 8–13–68, Cl. 161—55.
Moser-Glaser & Co., A.G.: *See*—
  Felix, Hans. 3,397,098.
Moshier, Edson G., and F. H. Canny, to SCM Corp. Ribbon cartridge. 3,396,828, 8–13–68, Cl. 197—151.
Mosley, Gerald: *See*—
  Hitt, James J., and Mosley. 3,397,353.
Moss, Wilfred. Device to measure diameter and thread pitch of a screw. 3,396,472, 8–13–68, Cl. 33—199.
Motorola, Inc.: *See*—
  Clark, Oscar M. 3,397,349.
  Golonski Leslie P. 3,397,285.
  Shafft, Hugo W. 3,397,328.
  Steel, Francis R., and Gawell. 3,397,367.
  Tanner, De Loss J. 3,397,284.

Motson, James F. Electroluminescent lamp with alternatively defined and undefined indicia. 3,397,384, 8–13–68, Cl. 313—108.
Mount, Keith B., 50% to A. C. Nolte, Jr. Drainage tube for body fluids provided with filtering means coated with bacterial preventive material. 3,396,727, 8–13–68, Cl. 128—349.
Muggee, Fred D., to Magna Corp. Process for recovery of petroleum by steam stimulation. 3,396,792, 8–13–68, Cl. 166—40.
Mullen, Thomas R.: *See*—
  Beaver, William L., and Mullen. 3,397,339.
Muller, Erwin: *See*—
  Heydkamp, Wolfgang, Kallert, Muller, and Freytag. 3,397,184.
Muller, Ludwig. Vibrating devices. 3,396,805, 8–13–68, Cl. 173—49.
Muller, Ludwig. Clamping device for clamping a tubular member to a pile driving device. 3,396,980, 8–13–68, Cl. 279—2.
Munk, Kurt, to Geratebau Eberspacher OHG. Combustion air system. 3,396,532, 8–13–68, Cl. 60—13.
Murdock, James P., and J. E. Schroeder, to Allis-Chalmers Mfg. Co. Method of forming ohmic contacts in semiconductor devices. 3,396,454, 8–13–68, Cl. 29—494.
Murphy, Francis A., to The Tyler Co. Structural paneling. 3,396,497, 8–13–68, Cl. 52—80.
Nachtigall Guenter W.: *See*—
  Dorlon, George H., Nachtigall, and Cerreta. 3,397,059.
Nadella S.A.: *See*—
  Pitner, Alfred. 3,397,332.
Nagaoka, Shingi: *See*—
  Ito, Tsunehiko, Nagaoka, and Ochiai. 3,396,994.
Nakai, Shiro, to Kimura Entetsu Kagaku Kikai Co., Ltd. Method for separating concentrated solution of electrolyte from high viscous solution by dialysis and an apparatus therefor. 3,297,141, 8–13–68, Cl. 210—22.
Nakagawa, Harry M.: *See*—
  Lakin, Hubert W., and Nakagawa. 3,397,040.
Nakajima, Yoshihiko, and K. Hara, to Janome Sewing Machine Co., Inc. Rotary looping device for a sewing machine. 3,396,688, 8–13–68, Cl. 112—228.
Nakamura, Yoshiaki: *See*—
  Sato, Katsuo, and Nakamura. 3,396,452.
Nakanishi, Yoshitaka. One-touch plug-in lock. 3,397,000, 8–13–68, Cl. 292—61.
Nalco Chemical Co.: *See*—
  Liu, David Y.-L. 3,397,144.
  Snyder, William T. 3,396,935.
  Nalco Chemical Co. 3,396,935.
Nambu, Masao, to Nippon Oil Co. Ltd. Process of purifying and recovering isoolefins. 3,397,250, 8–13–68, Cl. 260—677.
Narins, Arthur P., J. Austin, J. D. Ellis, and A. Conners, to Occidental Research & Engineering Ltd. Process for the preparation of polyammonium phosphates. 3,397,036, 8–13–68, Cl. 23—106.
Naro, Paul A., and R. D. Offenhauer, to Mobil Oil Corp. Polymerization of monoepoxides employing high surface area phosphate catalysts. 3,397,155, 8–13–68, Cl. 260—2.
Nash, John J., to Alsco, Inc. Weaponry firing devices. 3,396,628, 8–13–68, Cl. 89—1.814.
Nash, William B.: *See*—
  Brown, Michael R., Nash, Phillips, and Shand. 3,397,316.
National Aeronautics & Space Administration under provisions of 42 U.S.C. 2457(d): *See*—
  Badin, Frank E., and Farnsworth. 3,396,584.
  Rosen, Harold A., and Williams. 3,396,920.
  Webb, James E. 3,397,094.
National Automatic Tool Co.: *See*—
  Irish, Meral C. 3,396,493.
National Research Development Corp.: *See*—
  Melrose, Denis G. 3,396,409.
Natural Resources Corp.: *See*—
  Allen, Chauncey D. 3,396,715.
Navan Products, Inc.: *See*—
  Lauze, Robert L. 3,396,714.
Neal, Charles B., and L. R. Poel, to Sylvania Electric Products Inc. Vertical convergence tilt circuitry. 3,397,340, 8–13–68, Cl. 315—13.
Neeld, Douglas K.: *See*—
  Meng, Eberhard, and Neeld. 3,396,458.
Nef, Alfred, to Gebruder Buhler, A.G. Pressure casting machine. 3,396,873, 8–13–68, Cl. 222—309.
Nelson, Ira V., to United States of America, Atomic Energy Commission. Welding torch. 3,397,298, 8–13–68, Cl. 219—75.
Neri, Dino: *See*—
  Brambilla G. 3,397,257.
Nessly, Raymond S. Maple product for beverage, flavoring and the like. 3,397,062, 8–13–68, Cl. 99—28.
Neumann, Roland, H. Wunschmann, and P. Ehrhardt, to Veb Elektrogeratewerk Suhl. Dry shaver having a single spring means as a drive element and to retain the inner cutter in the shaver head when said head is removed. 3,396,463, 8–13–68, Cl. 30—43.92.
Newton Earl W., to The Trane Co. Pump housing seal arrangement. 3,396,906, 8–13–68, Cl. 230—127.
Ney, Peter, and W. Kuhnmunch, to Deutsche Gold- und Silber-Scheideanstalt vormals Roessler. Textile bleaching process. 3,397,033, 8–13–68, Cl. 8—111.
Nicolaisen, Bernard H., to Olin Mathieson Chemical Corp. Production of chloroisocyanurates. 3,397,206, 8–13–68, Cl. 260—248.
Nichols, Edward C., and B. E. Guindon, to J. D. Marshall, and H. L. Bomar; as Trustees of the Carolina Patent Development Trust. Loom fringe motion. 3,396,755, 8–13–68, Cl. 139—116.
Niehaus, Edward J., Jr.: *See*—
  Warrick, Edward C., and Niehaus. 3,396,826.
Niemann, Gustav. Worm and worm-wheel transmissions. 3,396,595, 8–13–68, Cl. 74—425.
Niemann, Robert A., to General Electric Co. Power control apparatus. 3,397,321, 8–13–68, Cl. 307—31.
Nigrelli, Gus T. Safety wheel for automotive and similar vehicles. 3,397,014, 8–13–68, Cl. 301—39.
Nilsson, Rutger E. V., to Alfa-Laval AB. Milking machine pulsator. 3,396,750, 8–13–68, Cl. 137—625.25.
Nippon Carbon Co., Ltd.: *See*—
  Yoshizawa, Shiro, and Watanabe. 3,397,087.
Nippon Electric Co., Ltd.: *See*—
  Ishii, Ryuichi, and Totani. 3,397,287.
  Kaneko, Hisashi, and Sawai. 3,397,360.
  Kaneko, Hisashi. 3,397,396.
  Sato, Katsuo, and Nakamura. 3,396,452.
Nippon Oil Co. Ltd.: *See*—
  Nambu, Masao. 3,397,250.
Niveau, Jean. Stretcher for picking up and transport of injured or sick persons. 3,396,414, 8–13–68, Cl. 5—81.
Nolin, Roger J.: *See*—
  Russell, Fred J., and Nolin. 3,397,002.
Nolte, Albert C., Jr.: *See*—
  Mount, Keith B. 3,396,727.
Nooter Corp.: *See*—
  Foster, Lawrence E., and Hicks. 3,396,753.
Nora, Harry C., to The Pillsbury Co. Agglomerating apparatus. 3,396,477, 8–13–68, Cl. 34—85.
Nord, Sten, to Forsheda Gummifabrik Aktiebolag. Bell and spigot pipe joints and method of sealing and locking pipe joints. 3,396,974, 8–13–68, Cl. 277—9.
Nordin, Robert W., to Teletype Corp. Method of making an electrode structure. 3,396,457, 8–13–68, Cl. 29—592.
Noren, Charles H.: *See*—
  Atadan, Erdem M., and Noren. 3,397,097.
Norris Dispenser, Inc.: *See*—
  Gale, Ronald. 3,396,869.
Norris, Edward O. Spray gun activation mechanism. 3,396,911, 8–13–68, Cl. 239—290.
Norris Industries, Inc.: *See*—
  Russell, Fred J., and Solovieff. 3,396,424.
North American Philips Co., Inc.: *See*—
  De Jong, Cornelis P., and Kanters. 3,396,891.
  Mabe, Andre Y. 3,396,548.
  Prast, Gijsbert, and Rietdijk. 3,396,547.
  Reinhoudt, Jacobus P., Marks, and Van Beukering. 3,396,976.
North American Rockwell Corp.: *See*—
  Anderson, William J. 3,397,078.
Norton, James L., to Bristol Siddeley Engines Ltd. Rotary bladed machines. 3,396,942, 8–13–68, Cl. 253—59.
Norwich Pharmacal Co., The: *See*—
  Berman, Harold, and Ebetino. 3,397,208.
  Watson, Edward J., Jr. 3,397,236.
Nowicki, Henry F., to James Lees & Sons Co. Tufting machine having plural shiftable needlebars and the method of making a tufted fabric. 3,396,687, 8–13–68, Cl. 112—79.
Nuovo Pignone S.p.A.: *See*—
  Scherillo, Vittorio. 3,396,754.
Nusim, Stanley H.: *See*—
  Kaufman, Arnold, Nusim, and Sklarz. 3,397,240.
Occidental Research & Engineering Ltd.: *See*—
  Narins, Arthur P., Austin, Ellis, and Conners. 3,397,036.
Ochiai, Yoshiya: *See*—
  Ito, Tsunehiko, Nagaoka, and Ochiai. 3,396,994.
Offenhauer, Robert D.: *See*—
  Naro, Paul A., and Offenhauer. 3,397,155.
Officine Meccaniche Agudio S.p.A.: *See*—
  Dettoni, Giorgio. 3,396,853.
Ohkubo, Shigeyuki. Cosmetic massage device. 3,396,720, 8–13–68, Cl. 128—40.
Ohorodnik, Alexander: *See*—
  Sennewald, Kurt, Ohorodnik, Kirstein, and Hardel. 3,397,122.
Okano, Hiroshi, to Kabushiki Kaisha Hitachi Seisakusho. Laminated X-ray analyzing crystal wherein the respective laminations have different lattice spacings. 3,397,312, 8–13–68, Cl. 250—51.5.
Okress, Ernest C., to American Standard, Inc. Fluid mover. 3,396,662, 8–13–68, Cl. 103—1.
Oldberg Mfg. Co.: *See*—
  Hall, James R. 3,396,813.
Olin Mathieson Chemical Corp.: *See*—
  Nicolaisen, Bernard H. 3,397,206.
  Papetti, Stelvio. 3,397,221.
  Valyi, Emery I. 3,396,782.
  Winter, Joseph. 3,397,045.
Olson, Harold J. Valve apparatus responsive to fluid flow. 3,396,740, 8–13–68, Cl. 137—87.
Oman, Erik, to Skogsagarnas Industri Aktiebolag. Alkali pretreatment in sulfate process to prevent malodors. 3,397,109, 8–13–68, Cl. 162—37.
O'Neill, William A.: *See*—
  Mather, John, Stimpson, and O'Neill. 3,397,032.
Oppasser, Edward F., to Alberto-Culver Co. Cap for aerosol container. 3,396,866, 8–13–68, Cl. 220—60.
Osterholtz, Carl E., and J. Derkacz, to Bethlehem Steel Corp. Composite nozzle pocket block. 3,396,877, 8–13–68, Cl. 222—566.

Ostwald, Fritz: *See*—
  Wintterlin, Max O., Ostwald, and Varga. 3,396,741.
Oswald, Anthony J., and D. B. Freeman, to Hooker Chemical Corp. Treatment of metal surfaces. 3,397,093, 8–13–68, Cl. 148—6.16.
Ottaway, Gerald H., H. Painke, T. Scheler, H. Will, and W. V. Wright, to International Business Machines Corp. Compact storage control apparatus. 3,397,391, 8–13–68, Cl. 340—172.5.
Otto, Dennis L., to The Timken Roller Bearing Co. Bearing seal case construction. 3,396,975, 8–13–68, Cl. 277—26.
Otto, Walter J., to J. L. Englesberg. Integral pump and filter assembly including electrode means. 3,397,135, 8–13–68, Cl. 204—276.
Overhead Door Corp.: *See*—
  Pemberton, Paul E. 3,396,503.
Overhoff, Heinrich, to A. Raymond. Molding fastener. 3,396,-434, 8–13–68, Cl. 24—73.
Owens-Illinois, Inc.: *See*—
  Bick, Gerald J., and Kirkbride. 3,396,897.
  Strouse, Melvin W., and Vincent. 3,396,899.
Oya, Iwao, to Sanyo Electric Co., Ltd., and Tokyo Sanyo Electric Co., Ltd. Hermetically sealed type motor-compressor for refrigerating machine. 3,396,903, 8–13–68, Cl. 230—58.
Packaging Frontiers, Inc.: *See*—
  Morris, James W., and Crossley. 3,396,507.
Painke, Helmut: *See*—
  Ottaway, Gerald H., Painke, Scheler, Will, and Wright. 3,397,391.
Painter, Phillip: *See*—
  Morrison, William E., and Painter. 3,396,652.
Palasky, Ervin C.: *See*—
  Henig, Seymour, and Palasky. 3,397,392.
Palmateer, Paul H., and W. D. Price, to International Business Machines Corp. Capacitor read-only memory with plural information and ground planes. 3,397,393, 8–13–68, Cl. 340—173.
Panko, Jerome J.: *See*—
  Bezlaj, Frank A., and Panko. 3,396,603.
Papetti, Stelvio, to Olin Mathieson Chemical Corp. Organosiloxane containing carboranes and process therefor. 3,397,-221, 8–13–68, Cl. 260—448.2.
Pardue, George H.: *See*—
  Anderson, Ronald A., and Pardue. 3,396,799.
Parisse, Louis L., to Koppers Co., Inc. Process for separation of alkyl phenols by azeotropic distillation with a nonpolar branched alkene. 3,397,124, 8–13–68, Cl. 203—52.
Parker, Carroll C.: *See*—
  Davidson, Ralph L., and Parker. 3,396,686.
Parker, Paul T., and F. J. Buchmann, to Esso Research and Engineering Co. Stabilizing halogenated copolymers. 3,397,-174, 8–13–68, Cl. 260—45.9.
Parker, Walter, to Scragg, Ernest & Sons Ltd. Yarn heating means in textile apparatus. 3,396,524, 8–13–68, Cl. 57—34.
Parker, Walter: *See*—
  Scragg, Frederick, and Parker. 3,396,523.
Paton, Hamilton N. K., to Dynabulk Corp. Methods of densifying and deterring deterioration and contamination of discrete particle material in a container. 2,396,762, 8–13–68, Cl. 141—7.
Pattyranie, Carel: *See*—
  Kubat, Josef, Pattyranie, Wahrem, Almin, Andersson, and Johanson. 3,396,850.
Paul, Robert A., and O. L. Forchheimer, to The J. E. Baker Co. Process for making dead burned dolomite. 3,397,070, 8–13–68, Cl. 106—58.
Paul, Robert A., and T. L. Shepherd, to The J. E. Baker Co. Combustion process and apparatus to increase a flame temperature. 3,397,256, 8–13–68, Cl. 263—52.
Paullus, Clarence L., and L. R. Stauffer, to AMP Inc. Cable clamp and guide means for electrical connectors. 3,397,279, 8–13–68, Cl. 174—135.
Paxton, Herbert J., Jr.: *See*—
  Welch, Frank J., and Paxton. 3,397,216.
Payment, Walter R., to W. R. Grace & Co. Process of producing a silicate-carbon complex. 3,397,151, 8–13–68, Cl. 252—378.
Payne, George B., to Shell Oil Co. Preparation of cyclopropane derivatives. 3,397,223, 8–13–68, Cl. 260—464.
Pearce, Edwin S., to Ayrshire Collieries Corp. Journal lubricator. 3,397,018, 8–13–68, Cl. 308—88.
Pearl, David L., J. G. Waller, and B. P. Head, Jr., to Kennesaw Plastic Co. Egg carton and label. 3,396,895, 8–13–68 Cl. 229—2.5.
Peebles, David M. Device for supporting files visibly. 3,396,-731, 8–13–68, Cl. 129—16.
Peek, Francis E. Safety reflective headlights. 3,397,335, 8–13–68, Cl. 313—111.
Pemberton, Paul E., to Overhead Door Corp. Panel-holding structure. 3,396,503, 8–13–68, Cl. 52—397.
Pennsalt Chemicals Corp.: *See*—
  Lindaberry, Harold L. 3,397,048.
  Smith, Herbert Q. 3,397,052.
Peres, Gerard F.: *See*—
  Guyot, Lucien F., and Peres. 3,397,341.
Perkins, Granville W., to Artichoke Industries, Inc. Artichoke machine. 3,396,766, 8–13–68, Cl. 146—52.
Perrine, Ralph J.: *See*—
  Cope, F. Troy, and Perrine. 3,396,951.
Perry, Eugene D., to Perry Mfg., Inc. Adjustable scaffold. 3,396,817, 8–13–68, Cl. 182—187.
Perry Mfg., Inc.: *See*—
  Perry, Eugene D. 3,396,817.
Pestel, Wolfgang: *See*—
  Hinterthur, Helmut, and Pestel. 3,396,630.
Pet Inc.: *See*—
  Bowen, Eldred W., and McAfee. 3,396,842.
Peterson, Donald J., to The Procter & Gamble Co. Preparation of alkali metal phosphides. 3,397,039, 8–13–68, Cl. 23—204.
Petrea, James C., to Wright Machinery Co., Inc. Material-in-suspension compensator and tare adjuster. 3,396,808, 8–13–68, Cl. 177—165.
Petrolite Corp.: *See*—
  Lissant, Kenneth J., and Bellos. 3,396,537.
Petry, Charles B.: *See*—
  Dutton, Oscar B., and Petry. 3,397,398.
Pfaudler, Ritter Corp.: *See*—
  Little, John R., and Sanford. 3,397,076.
Pfizer, Chas. & Co., Inc.: *See*—
  Hobbs, Donald C. 3,397,238.
  Korst, James J. 3,397,231.
  Makepeace, Edwin H., Jr. 3,397,197.
Pfost, Robert F., and W. E. Lock, to MVR Corp. Magnetic transducer head mount. 3,397,289, 8–13–68, Cl. 179—100.2.
Phillips, Geoffrey: *See*—
  Brown, Michael R., Nash, Phillips, and Shand. 3,397,316.
Phillips, Howard E.: *See*—
  Burt, James G., and Phillips. 3,397,150.
Phillips Petroleum Co.: *See*—
  Begley, John W., and Marsheck. 3,397,247.
  Gruver, Jerry T. 3,397,167.
  Little, Thomas W., and Finken. 3,396,797.
  Louthan, Rector P. 3,397,244.
Physics International Co.: *See*—
  Benson, Glendon M. 3,396,806.
Picanol, Jaime. Multicolor magazine control means. 2,396,756, 8–13–68, Cl. 139—232.
Pickerrell, Eugene E.: *See*—
  Winkler, William K., and Pickerrell. 3,396,717.
Pickert, Paul E., and A. P. Bolton, to Union Carbide Corp. Hydrocarbon reforming process and catalyst compositions therefor. 3,397,137, 8–13–68, Cl. 208—138.
Picollo, Giacomo. Counting machine adjustable for coins of different diameters. 3,396,737, 8–13–68, Cl. 133—3.
Pieper, Rudolf: *See*—
  Fracke, Aribert, Klein, Pieper, and Weber. 3,396,511.
Pierce, William R., to General Motors Corp. Filter condition indicator. 3,397,395, 8–13–68, Cl. 340—239.
Pillsbury Co., The: *See*—
  Cunningham, David K., and Hans. 3,397,065.
  Forkner John H. 3,396,656.
  Galle, Edward L. 3 397,067.
  Katz, Morris H. 3,397,061.
  Nora, Harry C. 3,396,477.
Piper, Myron M., and T. B. Burris, to Fisher Governor Co. Gas well dewatering controller. 3,396,793, 8–13–68, Cl. 166—53.
Pipitone, Salvatore J.: *See*—
  Carman, Robert R., and Pipitone. 3,397,399.
Pisano, Frank T., and L. L. Pitney, to United States of America, Army. Gas generating system. 3,397,030, 8–13–68, Cl. 431—157.
Pitner, Alfred, to Nadella S.A. Journal rolling bearing including a segmented cage. 3,397,332, 8–13–68, Cl. 310—90.
Pitney, Leonord L.: *See*—
  Pisano, Frank T., and Pitney. 3,397,030.
Plattner, Robert F.: *See*—
  Kirsinas, Peter, and Plattner. 3,396,760.
Pleiger, Paul, Maschinenfabrik: *See*—
  Ryzner, Clemens. 3,396,633.
Pleuger, Friedrich. Method of producing concrete piles for foundations. 3,396,546, 8–13–68, Cl. 61—53.66.
Plostnieks, Janis, to McNeil Laboratories, Inc. 11,11α-dihydro-11α-hydroxy-2-(lower alkyl)-11-R₃-6H-benzo[5,6]cyclohept[1,2,3-cd] indolin 1,6-diones and intermediates for their preparation. 3,397,202, 8–13–68, Cl. 260—247.2.
Podlipnik, John, T. J. Karr, and E. M. Fauber, to Sinclair Research, Inc. Paperboard base impregnated with pitch or a blend of pitch and hydrocarbon polymer resin. 3,397,082, 8–13–68, Cl. 117—158.
Poel, Lawrence R.: *See*—
  Neal, Charles B., and Poel. 3,397,340.
Poland, Milton E., to Champion Spark Plug Co. Insulator body having an electrically conductive surface and method. 3,397,083, 8–13–68, Cl. 117—201.
Polaroid Corp.: *See*—
  Bishop, Donald R., and Sullivan. 3,396,649.
  Brackett, Robert D. 3,396,577.
  Chen, Richard J., and Gold. 3,396,648.
  Downey, Rogers B. 3,396,647.
  Land, Edwin H. 3,396,646.
  Land, Edwin H. 3,397,023.
  Rubinstein, Leon, and Sable. 3,396,650.
Polejes, Jacob D.: *See*—
  Hecht, James L., and Polejes. 3,397,108.
Pomerantz, Daniel I., to P. R. Mallory & Co., Inc. Anodic bonding. 3,397,278, 8–13–68, Cl. 174—52.
Pommer, Dennis L.: *See*—
  Hasten, Mark, Lobash, and Pommer. 3,396,676.
Porter, David D.: *See*—
  Arnold, Alanson J., Van Dyke, and Porter. 3,397,259.
Porter, H. K., Inc.: *See*—
  Porter, Thomas M. 3,396,571.
Porter, Thomas M., to H. K. Porter, Inc. Compression tool. 3,396,571, 8–13–68, Cl. 72—410.
Potter, George A. Universal drive unit. 3,396,553, 8–13–68, Cl. 64—6.
Potter, Rossiter R., to AMP Inc. Detachable waterproof connector. 3,397,377, 8–13–68, Cl. 339—60.
Pradenas, Fernando, to Triad Enterprises. Fastening device. 3,396,482, 8–13–68, Cl. 40—2.2.

Prakla Gesellschaft fur Praktische Lagerstattenforschung GmbH: *See*—
  Maass, Hans W., and Sender. 3,397,400.
Prast, Gijsbert, and J. A. Rietdijk, to North American Philips Co., Inc. Cold transport to a remote location with small temperature drop. 3,396,547, 8–13–68, Cl. 62—6.
Pratt, Thomas N.: *See*—
  Sakraida, Carl R., and Pratt. 3,396,712.
Premier Athletic Products Corp.: *See*—
  Rosenfeld, Martin. 3,396,969.
Prewitt, Thomas A., and D. E. Brinkerhoff, to General Motors Corp. Four-speaker adjustable stereo sound system. 3,397,-286, 8–13–68, Cl. 179—1.
Pricer, Wilbur D.: *See*—
  Palmateer, Paul H., and Pricer. 3,397,393.
Prifogle, John S., and R. C. Vail, to Belden Corp. Electrical connector. 3,397,383, 8–13–68, Cl. 339—252.
Prill, Arnold L.: *See*—
  Harrington, John H., and Prill. 3,397,057.
Primak, William. Ski overboot. 3,396,479, 8–13–68, Cl. 36—2.5.
Procter & Gamble Co., The: *See*—
  Lucas, Malcolm B. 3,396,900.
  Peterson, Donald J. 3,397,039.
Profit, Franz J.: *See*—
  Borer, Herbert W., Profit, and White. 3,396,863.
Puig, Juan C. Lamp socket with insulation piercing contacts. 3,397,379, 8–13–68, Cl. 339—99.
Puig, Juan C. Electric plug with insulation piercing contacts. 3,397,380, 8–13–68, Cl. 339—99.
Puregas Equipment Corp.: *See*—
  Kern, Joseph F., Desnoes, and Adams. 3,397,031.
Puritan Cordage Mills: *See*—
  Faulkner, Clarence F. 3,396,625.
Quakertown Stove Works, Inc.: *See*—
  Weyland, Carl M., and Getz. 3,396,716.
Quick Cable Corp.: *See*—
  Shannon, John K. 3,397,382.
Quigley Co., Inc.: *See*—
  Demaison, Raymond J. 3,396,855.
Quinlan, Joseph B.: *See*—
  Scanlon, John J., Jr., and Quinlan. 3,396,658.
Racal Communications Ltd.: *See*—
  Wolfendale, Eric. 3,397,351.
Rade, Theodore P. Adjustable scraper implement. 3,396,421, 8–13–68, Cl. 15—236.
Radio Corp. of America: *See*—
  Fulton, Langdon H. 3,396,890.
  Weimer, Paul K. 3,397,325.
Rampacek, Carl: *See*—
  Brantley, Francis E., and Rampacek. 3,397,130.
Ranney, Maurice W.: *See*—
  Cupper, Robert A., and Ranney. 3,397,146.
Raphael, Julian J., and E. Shulman. Support for a steel rule die member and method of producing the same. 3,396,620, 8–13–68, Cl. 83—686.
Rantis, George M., to L. H. Dounis. Self-sealing bolt assembly. 3,396,996, 8–13–68, Cl. 287—189.36.
Raspante, Antonino. Blow-molding apparatus. 3,396,427, 8–13–68, Cl. 18—5.
Ratby Engineering Co. Ltd.: *See*—
  Taylor, Robert C., and Brittain. 3,396,558.
Rausing, Gad A., to AB Tetra Pak. Method of improving the heat sealing qualities of thermoplastic film oriented by stretching. 3,397,101, 8–13–68, Cl. 156—229.
Rayburn, Walker H., to The Air Preheater Co., Inc. Boiler cleaning control method. 3,396,706, 8–13–68, Cl. 122—379.
Raychem Corp.: *See*—
  Ellis, Roger H. 3,396,894.
  Sherlock, Hugh P. 3,396,455.
  Wetmore, Judson D. 3,396,460.
Raymond, A.: *See*—
  Overhoff, Heinrich. 3,396,434.
Raymond, Martin J. M.: *See*—
  Elmes, Albert W., and Raymond. 3,396,865.
Raytheon Co.: *See*—
  Davis, Warren C., and Spencer. 3,397,336.
Rederiaktiebolaget Nordstjernan, Axel Johnson Institutet for Industriforskning I Nynashamn: *See*—
  Kubat, Josef, Pattyranie, Wahrem, Almin, Andersson, and Johanson. 3,396,850.
Reding, John N., Jr., to The Dow Chemical Co. Process for impregnating porous solids. 3,396,777, 8–13–68, Cl. 164—97.
Redlin, Eugene L.: *See*—
  Stein, Clinton L., and Redlin. 3,396,483.
Reed, Myles E. Detachable snow tread. 3,396,771, 8–13–68, Cl. 152—175.
Reese, Eckart: *See*—
  Merten, Rudolf, Dunwald, Mielke, and Reese. 3,397,253.
Reinhoudt, Jacobus P., C. J. A. T. Marks, and H. C. J. Van Beukering, to North American Philips Co., Inc. Device, particularly hot-gas reciprocating engine. 3,396,976, 8–13–68, Cl. 277—71.
Reliance Electric and Engineering Co., The: *See*—
  Wisman, Franklin O. 3,397,354.
Repeta, Anthony A.: *See*—
  Bishup, Bernard W., Repeta, and Giarrizzo. 3,397,386.
Research Corp.: *See*—
  Fernandes, Mario V., Koprowski, and Wiktor. 3,397,267.
Reynolds Metals Co.: *See*—
  Bylund, Linton D. 3,397,044.
  Richards, Nolan E., and Berry. 3,396,494.
Rich, William M., Jr., and G. E. Flinn, to Borg-Warner Corp. Transmission mechanism. 3,396,610, 8–13–68, Cl. 74—740.
Richards, Nolan E., and J. S. Berry, Jr., to Reynolds Metals Co. Removal of protrusions formed on carbon anodes. 3,396,-494, 8–13–68, Cl. 51—319.
Richter, Ferdinand J., and J. M. Granowitz, to American Cyanamid Co. Disposable surgical scrub sponge and dispenser. 3,396,419, 8–13–68, Cl. 15—104.93.
Rickert, Edward N., Jr., to Monarch Forge and Machine Works, Inc. Cleaning apparatus for paper machine press felts. 3,397,111, 8–13–68, Cl. 162—279.
Ridenour, Jack B., to General Motors Corp. Screw and driver. 3,396,765, 8–13–68, Cl. 145—50.
Riedel, John C., to Endevco Corp. Measuring system. 3,397,-329, 8–13–68, Cl. 310—8.4.
Ries, Raymond J. Unitary planter with bottom flange. 3,396,-488, 8–13–68, Cl. 47—33.
Rietdijk, Johan A.: *See*—
  Prast, Gijsbert, and Rietdijk. 3,396,547.
Riley, John E.: *See*—
  Smith, Robert W., Glekas, Riley, and Swingle. 3,397,117.
Rink, Karl-Heinz: *See*—
  Schuler, Wilhelm A., Bader, Rink, and Weigert. 3,397,-172.
Rinker, Edwin C., and F. M. Gilbert, to Sel-Rex Corp. Device for holding and moving chains for liquid treatment thereof. 3,397,134, 8–13–68, Cl. 204—212.
Risany, Joseph J.: *See*—
  Urbutis, Algimantas P., Schenk, Risany, and Marbach. 3,397,069.
Risser, J. Marlin. Toy traversing hoist and game. 3,396,487, 8–13–68, Cl. 46—244.
Ritterhoff, Charles W., and R. D. Romeril, to Bethlehem Steel Corp. Apparatus for controlled cooling of metal stock. 3,396,564, 8–13–68, Cl. 72—201.
River, Charles, Breeding Laboratories, Inc., The: *See*—
  Trexler, Philip C. 3,396,701.
Rivers, Ronald D., to United States of America, Atomic Energy Commission. Sulfur purification by fractional condensation. 3,397,041, 8–13–68, Cl. 23—294.
Robb, Walter L.: *See*—
  Ward, William J., III, and Robb. 3,396,510.
Roberts, George B. Adjustable awnings. 3,396,496, 8–13–68, Cl. 52—75.
Roberts, George L., Jr., H. A. Bragg, and W. R. Whatley, to American Cyanamid Co. Digestion of titanium-bearing ores. 3,397,037, 8–13–68, Cl. 23—117.
Robertshaw Controls Co.: *See*—
  Di Pilla, Anthony A. 3,396,602.
Robicheaux, Warren J., to Gulf Oil Corp. Roto-piston engine. 3,396,709, 8–13–68, Cl. 123—45.
Robinson, Elvin F. Carding machine drive having antifriction guide means for separating the opposed reaches of crossed belts therein. 3,396,432, 8–13–68, Cl. 19—98.
Robinson, Harold G., to Austin Concrete Works, Inc. Protective apparatus for concrete pipe forming machines. 3,396,-441, 8–13–68, Cl. 25—36.
Rockwell Mfg. Co.: *See*—
  Warrick, Edward C., and Niehaus. 3,396,826.
Rogallo, Francis M. Control devices for flexible wing aircraft. 3,396,921, 8–13–68, Cl. 244—43.
Rogers, Thelmer A. Vibratory plow. 3,396,804, 8–13–68, Cl. 172—40.
Rohde, Lothar, to Rohde & Schwarz Ogh. Apparatus for measuring the input characteristics of four-terminal networks including a programming means. 3,397,359, 8–13–68, Cl. 324—57.
Rohde & Schwarz Ogh: *See*—
  Rohde, Lothar. 3,397,359.
Rohm & Haas Co.: *See*—
  Schmidle, Claude J., and Brown. 3,397,166.
Rollform, Inc.: *See*—
  Adams, George C. 3,396,997.
Romeril, Robert D.: *See*—
  Ritterhoff, Charles W., and Romeril. 3,396,564.
Roncken, Hubertus W. H. M.: *See*—
  Van Loon, Arie, and Roncken. 3,397,058.
Roseberry, Wilmer W., to Jackson Vibrators, Inc. Adjustable tamper blade assembly. 3,396,871, 8–13–68, Cl. 104—13.
Rosell, Lester P., to Emco Wheaton, Inc. Emergency valve responsive to impact, jarring or heat. 3,396,739, 8–13–68, Cl. 137—39.
Rosen, Harold A., and D. D. Williams, to National Aeronautics & Space Administration. Apparatus for changing the orientation and velocity of a spinning body traversing a path. 3,396,920, 8–13–68, Cl. 244—1.
Rosenblad, Curt F. Cleaning of heat exchangers used with cellulose digesters. 3,397,110, 8–13–68, Cl. 162—42.
Rosenfeld, Martin, to Premier Athletic Products Corp. Football training dummy. 3,396,969, 8–13–68, Cl. 273—55.
Ross, Doand L.: *See*—
  Sjoberg, Robert E., Girala, Ryan, and Ross. 3,396,575.
Ross, William A., to Sundstrand Corp. Hydrostatic transmission. 3,396,607, 8–13–68, Cl. 74—687.
Rostone Corp.: *See*—
  Wilkinson, Robert E. 3,397,169.
Roth, Harold H., to The Dow Chemical Co. Purification of chloromethylaromatic polymers by perchloroethylene extraction. 3,397,179, 8–13–68, Cl. 260—47.
Roto-Diesel: *See*—
  Garnier, Georges. 3,396,710.
Rouy, Auguste L. M. A., and A. J. Weinstein, to The Ednalite Corp. Method and device for measuring surface roughness. 3,396,627, 8–13–68, Cl. 88—14.
Rowe, George E., to Emhart Corp. Blow molding apparatus for a glassware forming machine. 3,397,047, 8–13–68, Cl. 65—260.
Rowland, Edwin C. Cutting torch mount. 3,396,957, 8–13–68, Cl. 266—23.
Roxlo, William D., to E. I. du Pont de Nemours and Co. Apparatus for making non-woven webs. 3,396,433, 8–13–68, Cl. 19—156.3.
Royal Industries, Inc.: *See*—
  Baker, Silveus M., and Smiley. 3,396,858.

Rubber Products Development Proprietary Ltd.: *See*—
Ansell, Harvey N. 3,397,265.
Rubinstein, Leon, and A. J. Sable, to Polaroid Corp. Photographic apparatus. 3,396,650, 8-13-68, Cl. 95—89.
Ruckert, Friedrich, to Daimler-Benz Aktiengesellschaft. Continuous brake system with the aid of a hydrodynamic circulatory system. 3,396,825, 8-13-68, Cl. 188—90.
Ruderman, Irving W.: *See*—
Taylor, Thomas I., and Ruderman. 3,396,719.
Rupprecht, Joachim: *See*—
Hanlein, Walter, and Rupprecht. 3,396,574.
Russell, Denis G. Container and method of making same. 3,396,896, 8-13-68, Cl. 229—23.
Russell, Fred J., and G. B. Solovieff, to Norris Industries, Inc. Door closer. 3,396,424, 8-13-68, Cl. 16—62.
Russell, Fred J., and R. J. Nolin. Two-way auxiliary bolt. 3,397,002, 8-13-68, Cl. 292—192.
Russell, James M., III: *See*—
Sinclair, Archibald R., and Russell. 3,397,318.
Russell, William S.: *See*—
Champaneria, Ashok J., and Russell. 3,397,090.
Russell, William S., to Hooker Chemical Corp. Method for forming improved coatings on metal. 3,397,091, 8-13-68, Cl. 148—6.2.
Ruston & Hornsby Ltd.: *See*—
Baxter, Allan S., Warriner, and Jeffery. 3,396,819.
Rutherford, Bruce J., J. M. Shipley, and R. A. Satchwill, to The Coca-Cola Co. Liquid heating apparatus. 3,396,653, 8-13-68, Cl. 99—282.
Ryan, Paul V.: *See*—
Sjoberg, Robert E., Girala, Ryan, and Ross. 3,396,575.
Ryckaert, Andre G., and C. Domen, deceased (by L. Domen (nee Depauw), heir), to Solvay & Cie. Stabilized chlorinated hydrocarbons. 3,397,246, 8-13-68, Cl. 260—652.5.
Rygiol, Henry V. Wire feeder. 3,396,888, 8-13-68, Cl. 226—134.
Ryzner, Clemens, to Paul Pleiger Maschinenfabrik. Hydraulic variable torque motor. 3,396,633, 8-13-68, Cl. 91—202.
SCM Corp.: *See*—
Bordenca, Carl, and Derfer. 3,397,053.
Moshier, Edson G., and Canny. 3,396,828.
S-P Mfg. Corp., The: *See*—
Sampson, Merritt B. 3,396,982.
Saari, John M., R. L. Schoen, and I. E. Dayton, to The Boeing Co. Broad-beam mass spectrometer having particle energy selection means. 3,397,311, 8-13-68, Cl. 250—41.9.
Sable, Arthur J.: *See*—
Rubinstein, Leon, and Sable. 3,396,650.
Sachs, Charles M., and E. E. Astor, to International Latex Corp. Long-line brassiere. 3,396,728, 8-13-68, Cl. 128—427.
Sahlstrom Mfg. Co.: *See*—
Sahlstrom, Nils J. 3,396,912.
Sahlstrom, Nils J., to Sahlstrom Mfg. Co. Slurry handling apparatus. 3,396,912, 8-13-68, Cl. 239—665.
St. Joseph Bank and Trust Co.: *See*—
Bouskill, Frederick M. 3,396,845.
Sak, James G., to The Dow Chemical Co. Waste treatment process. 3,397,139, 8-13-68, Cl. 210—7.
Sakamoto, Nobuaki: *See*—
Takigawa, Bin, Sakamoto, and Miyoshi. 3,397,162.
Sakraida, Carl R., and T. N. Pratt, to General Motors Corp. Cover seal arrangement. 3,396,712, 8-13-68, Cl. 123—198.
Salvemini, Antonio: *See*—
Smai, Franco, and Salvemini. 3,397,241.
Sampson, Merritt B., to The S-P Mfg. Corp. Chuck. 3,396,982, 8-13-68, Cl. 279—120.
Samuels, Abraham M., and E. B. Shapiro, to Chicago Specialty Mfg. Co. Faucet handle assembly. 3,396,604, 8-13-68, Cl. 74—548.
Sandbrook, Dean E., to United States Steel Corp. Kiln. 3,396,953, 8-13-68, Cl. 263—33.
Sanford, Elbert A.: *See*—
Little, John R., and Sanford. 3,397,076.
Sano, Ichiro: *See*—
Sasagawa, Ryusuke, Fujiwara, Kosuge, and Sano. 3,397,089.
Sano, Yoshiaki: *See*—
Yoshida, Akinobu, Ishikawa, and Sano. 3,396,655.
Sanyo Electric Co., Ltd.: *See*—
Oya, Iwao. 3,396,903.
Sarnoff, Stanley J. Hypodermic syringe and cartridge for use therewith. 3,396,726, 8-13-68, Cl. 128—218.
Sasagawa, Ryusuke, Y. Fujiwara, T. Kosuge, and I. Sano, to Furukawa Denchi Kabushiki Kaisha. Storage battery with transparent cover having connectors in channels. 3,397,089, 8-13-68, Cl. 136—170.
Satchwill, Ralph A.: *See*—
Rutherford, Bruce J., Shipley, and Satchwill. 3,396,653.
Sato, Katsuo, and Y. Nakamura, to Nippon Electric Co., Ltd. Method and apparatus for breaking a semiconductor wafer into elementary pieces. 3,396,452, 8-13-68, Cl. 29—413.
Sauer, Charlotte I.: *See*—
Schmelzle, Ambrose F., and Sauer. 3,396,837.
Sawai, Akira: *See*—
Kaneko, Hisashi, and Sawai. 3,397,360.
Scanlon, John J., Jr., and J. B. Quinlan, to United States of America, Army. Small arms cartridge. 3,396,658, 8-13-68, Cl. 102—38.
Schaefer, Harold F., and R. F. Westcott, to The Dow Chemical Co. Method of packaging fresh meat. 3,397,068, 8-13-68, Cl. 99—174.
Schafft, Hugo W., to Motorola, Inc. Voltage generation utilizing piezoelectric effects. 3,397,328, 8-13-68, Cl. 310—8.1.
Schalge, Roger D.: *See*—
Davidson, Frederic A., Jr., and Schalge. 3,396,498.
Scharmann & Co.: *See*—
Schraub, Willy. 3,397,102.
Schaub, Edwin L., to Ideal Corp. Clamp for hose or the like. 3,396,439, 8-13-68, Cl. 24—274.
Schausberger, Helmut: *See*—
Fengler, Harald, Schausberger, and Kocourek. 3,396,964.
Scheibel, Edward G. Freeze drying system. 3,396,475, 8-13-68, Cl. 34—5.
Scheid, Richard W., to Ward Mfg., Inc. Spring actuated permanent top for camping trailer. 3,397,007, 8-13-68, Cl. 296—27.
Scheler, Titus: *See*—
Ottaway, Gerald H., Painke, Scheler, Will, and Wright. 3,397,391.
Schenk, Bernard H.: *See*—
Urbutis, Algimantas P., Schenk, Risany, and Marbach. 3,397,069.
Schenck Mfg. Corp.: *See*—
Frank, Karl F. 3,397,355.
Schenck, Robert A. M., to Mercantile Marine Engineering & Graving Docks Co. Grit blasting machine. 3,396,492, 8-13-68, Cl. 51—8.
Scherillo, Vittorio, to Nuovo Pignone S.p.A. Drive for selvedge forming mechanisms. 3,396,754, 8-13-68, Cl. 139—54.
Schering Corp.: *See*—
Hart, Richard D., and Harris. 3,397,054.
Schieber, David: *See*—
Url, Joseph B., Erlicki, and Schieber. 3,397,361.
Schlatter, H. A., A.G.: *See*—
Schonmann, Hermann L. 3,397,300.
Schlumberger Technology Corp.: *See*—
Anderson, Ronald A., and Pardue. 3,396,799.
Bell, William T. 3,396,788.
Dumanoir, Jean L. 3,397,356.
Kisling, James W., III. 3,396,448.
Schuster, Nick A., and Bell. 3,396,786.
Stafford, John A. 3,397,405.
Vann, Roy R. 3,396,787.
Voetter, Ulrich E. 3,396 796.
Schmelzle, Ambrose F., and C. I. Sauer, to Minnesota Mining and Mfg. Co. Pressure-sensitive adhesive masking tape having polypropylene film backing. 3,396,837, 8-13-68, Cl. 206—59.
Schmidle, Claude J., and G. I. Brown, to Rohm & Haas Co. Method of preparing polymer dispersions in a mixed hydrocarbon and fluorinated hydrocarbon solvent media. 3,397,166, 8-13-68, Cl. 260—33.6.
Schmidt, Klaus: *See*—
Walther, Emil, Schmidt, and Grassman. 3,396,474.
Schmitt, Armin, to Eisenwerke Kaiserslautern G.m.b.H. Rotary pumps for viscous fluids. 3,396,667, 8-13-68, Cl. 103—126.
Schneider, Henry W., to Instituut voor toegepast Marktonderzoek. System for determining the listening habits of wave signal receiver users. 3,397,402, 8-13-68, Cl. 346—37.
Schoeller-Bleckmann Stahlwerke Aktiengesellschaft: *See*—
Schreier, Kurt, and Loibl. 3,396,945.
Schoen, Richard L.: *See*—
Saari, John M., Schoen, and Dayton. 3,397,311.
Schonmann, Hermann L., to H. A. Schlatter, A.G. Biasing device for the slide carriage of a butt welding machine. 3,397,300, 8-13-68, Cl. 219—101.
Schorp, Georg, to Bayerisches Leichtmetallwerk Graf Blucher Von Wahlstatt KG. Infinitely variable mechanical speed transmission. 3,396,591, 8-13-68, Cl. 74—230.17.
Schraub, Willy, to Scharmann & Co. Method of making guiding means for machine carriages. 3,397,102, 8-13-68, Cl. 156—257.
Schreiber, Peter, to O. H. Drager. Respirator with negative pressure limiting valve. 3,396,725, 8-13-68, Cl. 128—145.8.
Schreier, Kurt, and J. Loibl, to Schoeller-Bleckmann Stahlwerke Aktiengesellschaft. Mounting for elevated platform. 3,396,945, 8-13-68, Cl. 254—106.
Schrimper, Vernon L., and L. E. Hermann, to Iowa Mfg. Co. Truck hook for bituminous paving machines. 3,396,991, 8-13-68, Cl. 280—479.
Schroeder, James E.: *See*—
Murdock, James P., and Schroeder. 3,396,454.
Schuler, Wilhelm A., E. Bader, K.-H. Rink, and W. Weigert, to Deutsche Gold- und Silber-Scheideanstalt vormals Roessler. Process for the preparation of polyacrolein gels and process for improving the properties and sealing of soils, soil formations, structures, structural elements and structural materials. 3,397,172, 8-13-68, Cl. 260—41.
Schultz, Robert G., to Monsanto Co. Process of reacting tetraalkylallene with palladous halide. 3,397,214, 8-13-68, Cl. 260—429.
Schumacher, Ernst, to Daimler-Benz Aktiengesellschaft. Drive connection. 3,396,608, 8-13-68, Cl. 74—688.
Schuman, Albert. Concrete saw guide and method of use thereof. 3,396,713, 8-13-68, Cl. 125—14.
Schuster, Nick A., and W. T. Bell, to Schlumberger Technology Corp. Depth control methods and apparatus. 3,396,786, 8-13-68, Cl. 166—4.
Schwab, Louis. Filters. 3,396,517, 8-13-68, Cl. 55—368.
Schwan, Judith A., and J. E. Jones, to Eastman Kodak Co. Supersensitization of green-sensitive silver halide emulsions. 3,397,060, 8-13-68, Cl. 96—104.
Schwarz, Leo L. System for elimination of condensation in fuel storage tanks. 3,396,744, 8-13-68, Cl. 137—246.23.
Scocozza, Fred J. Cutter for pieces of piping. 3,396,467, 8-13-68, Cl. 30—95.
Scott, Robert K., to Dresser Industries, Inc. Method of making a shell mold. 3,396,775, 8-13-68, Cl. 164—26.
Scott, Stanley G., and C. J. England, to The Monotype Corp. Ltd. Typographic molds with cooling means. 3,396,831, 8-13-68, Cl. 199—91.
Scovill Mfg. Co.: *See*—
Daddona, Domenic J., Jr. 3,396,436.
Scoville, Wright A. Fishbook holder. 3,396,998, 8-13-68, Cl. 289—17.

Scragg, Ernest & Sons Ltd.: *See*—
Scragg, Frederick, and Parker. 3,396,523.
Parker, Walter. 3,396,524.
Scragg, Frederick, and W. Parker, to Ernest Scragg & Sons Ltd. Apparatus for twisting yarn. 3,396,523, 8-13-68, Cl. 57—34.
Scranton, Gordon N.: *See*—
Scranton, Morris D. and G. N. 3,396,802.
Scranton, Morris D. and G. N. Run-off control and method and apparatus for making. 3,396,802, 8-13-68, Cl. 172—1.
Scripto, Inc.: *See*—
Lovejoy, Charles K. 3,397,029.
Sculley, John D.: *See*—
Bruno, Michael F., and Sculley. 3,397,163.
Sears Roebuck and Co.: *See*—
Enger, Roy E. 3,396,408.
Fox, Theodore A. 3,396,730.
Seay, Orum E.: *See*—
Shelton, Robert Q., and Seay. 3,396,926.
Secret Charm Bra, Inc.: *See*—
Glick, Jack. 3,396,729.
Sedlak, John A., and K. Matsuda, to American Cyanamid Co. Process for preparing 1-fluorovinyl methyl ketone and copolymers of the same. 3,397,180, 8-13-68, Cl. 260—63.
Seeger, Heinz, to Frisch Kabel- und Verseilmaschinenbau, G.m.b.H. Accumulator stranding machine. 3,396,525, 8-13-68, Cl. 57—59.
Seid, Eugene: *See*—
Jennings, Alan K., Cone, and Seid. 3,397,389.
Seifert, Gerd W. Cooling fan for internal-combustion engine having thermostatically operated clutch. 3,396,909, 8-13-68, Cl. 230—271.
Sel-Rex Corp.: *See*—
Gilbert, Frederick M. 3,397,126.
Rinker, Edwin C., and Gilbert. 3,397,134.
Semon, Lawrence J. Telephone patching circuit. 3,397,288, 8-13-68, Cl. 179—42.
Sender, Friedhelm K.: *See*—
Maass, Hans W., and Sender. 3,397,400.
Sennewald, Kurt, A. Oborodnik, D. Kirstein, and H. Hardel, to Knapsack Aktiengesellschaft. Process for purifying β-chloroethane phosphonic acid dichloride by treatment with a tertiary amine salt. 3,397,122, 8-13-68, Cl. 203—38.
Sessody, Donald W., to Applied Power Industries, Inc. Hydraulic ram. 3,396,637, 8-13-68, Cl. 92—240.
Shackleford, William E., and W. J. Fullen, to General Mills, Inc. Hardenable epoxy resin compositions. 3,397,178, 8-13-68, Cl. 260—47.
Shand, William A.: *See*—
Brown, Michael R., Nash, Phillips, and Shand. 3,397,316.
Shannon, John K., to Quick Cable Corp. Electrical termination. 3,397,382, 8-13-68, Cl. 339—230.
Shannon, Suel G., and N. C. Graeff, to AMP Inc. Packaging apparatus. 3,396,839, 8-13-68, Cl. 206—63.2.
Shansky, Albert, to Turner Hall Corp. Fiber reactive dyestuff composition and methods of dyeing human hair therewith. 3,396,736, 8-13-68, Cl. 132—7.
Shapiro, Eugene B.: *See*—
Gore, William C., and Shapiro. 3,396,614.
Samuels, Abraham M., and Shapiro. 3,396,604.
Shearer, Newton H., Jr., and H. W. Coover, Jr., to Eastman Kodak Co. Three-component catalyst containing polymeric methyl halide metal reaction product and titanium compound for olefin polymerization. 3,397,196, 8-13-68, Cl. 260—93.7.
Shell-Globe Corp.: *See*—
Laswell, Samuel W. 3,396,761.
Shell Oil Co.: *See*—
Aben, Pieter C., and Kouwenhoven. 3,397,249.
Drost, Jacques J. J. 3,397,176.
Frew, Duncan W., Jr. 3,397,164.
Klein, Harvey S. 3,397,242.
Payne, George B. 3,397,223.
Sobolev, Igor. 3,397,227.
Stolton, Ralph E. 3,397,177.
Van Meurs, Pieter, and Volek. 3,396,791.
Shelton, Robert Q., and O. E. Seay, to Halliburton Co. Hitch for piggyback trailer car. 3,396,926, 8-13-68, Cl. 248—119.
Shen, Chung Y., and N. E. Stahlheber, to Monsanto Co. Ammonium polyphosphates. 3,397,035, 8-13-68, Cl. 23—106.
Shepherd, Thomas L.: *See*—
Paul, Robert A., and Shepherd. 3,397,256.
Sherlock, Hugh P., to Raychem Corp. Method of recovering heat recoverable articles. 3,396,455, 8-13-68, Cl. 29—498.
Sherman, Martin. Child's shoe. 3,396,480, 8-13-68, Cl. 36—2.5.
Shipley, James M.: *See*—
Rutherford, Bruce J., Shipley, and Satchwill. 3,396,653.
Shulman, Elliott: *See*—
Raphael, Julian J., and Shulman. 3,396,620.
Siegener Maschinenbau G.m.b.H.: *See*—
Hein, Ewald, and Kramer. 3,396,617.
Siemens Aktienkesellschaft: *See*—
Fracke, Aribert, Klein, Pieper, and Weber. 3,396,511.
Hanlein, Walter, and Rupprecht. 3,396,574.
Kriegleistein, Walter. 3,397,084.
Walter Emil, Schmidt, and Grassman. 3,396,474.
Siemens-Reiniger-Werke Aktiengesellschaft: *See*—
Elsas, Adolf. 3,397,338.
Siempelkamp, Eugen. Temperature-controlled press platen. 3,396,783, 8-13-68, Cl. 165—165.
Signode Corp.: *See*—
Annis, James R., Jr. 3,396,889.
Silver, Isadore L.: *See*—
Di Margio, Nicholas A., and Silver. 3,396,451.
Simanek, Edward J., and M. Martini, to Amsted Industries Inc. Variable load brake. 3,396,823, 8-13-68, Cl. 188—56.
Sims, Chester T.: *See*—
Girard, Roland T., Sims, Wisely. 3,397,080.
Sinclair Archibald R., and J. M. Russell, III, to United States of America, National Aeronautics and Space Administration. Ablation sensor. 3,397,318, 8-13-68, Cl. 250—227.
Sinclair-Koppers Co.: *See*—
Williams, Olin E. 3,397,258.
Sinclair Research, Inc.: *See*—
Podlipnik, John, Karr, and Fauber. 3,397,082.
Sippel, Roy J., to E. I. du Pont de Nemours, and Co. Process for manufacturing sintered silica gel of lowered bulk density and catalyst containing same. 3,397,153, 8-13-68, Cl. 252—452.
Sixel, Gustav-Adolf, to Beteiligungs- und Patentverwaltungsgesellschaft mit Beschrankter Haftung. Electric-arc smelting furnace. 3,397,276, 8-13-68, Cl. 13—10.
Sjoberg, Robert E., A. S. Girala, P. V. Ryan, and D. L. Ross, to Hydro-Test, Inc. Testing tool and method. 3,396,575, 8-13-68, Cl. 73—40.5.
Skirpan Electronics, Inc.: *See*—
Skirpan, Stephen J. 3,397,344.
Skirpan, Stephen J., to Skirpan Electronics, Inc. Lighting control apparatus. 3,397,344, 8-13-68, Cl. 315—194.
Sklaar, Richard L. Seating structure. 3,397,011, 8-13-68, Cl. 297—219.
Sklarz, William A.: *See*—
Kaufman, Arnold, Nusim, and Sklarz. 3,397,240.
Skogsagarnas Industri Aktiebolag: *See*—
Oman, Erik. 3,397,109.
Skundberg, James O., to Waldorf Paper Products Co. Glue bond tester. 3,396,578, 8-13-68, Cl. 73—150.
Slaga, Case J., to Advertising Metal Display Co. Rotating article display mount. 3,396,932, 8-13-68, Cl. 248—349.
Slagel, Robert C., and L. A. Tushaus, to Ashland Oil & Refining Co. Rigid polyvinyl chloride. 3,397,175, 8-13-68, Cl. 260—45.85.
Slater, William W., and L. E. Thow, to Celanese Coatings Co. Aqueous solutions of salts of 1,4-bis(2-hydroxypropyl)-2-methyl piperazine and epoxy ester-maleic anhydride adducts. 3,397,159, 8-13-68, Cl. 260—18.
Slavings, Harold: *See*—
Massey, Lloyd H., and Slavings. 3,396,983.
Sloop, Clifford E. Meter box and liner. 3,397,346, 8-13-68, Cl. 317—104.
Sluter, Simon J.: *See*—
Welty, Lloyd G., and Sluter. 3,396,641.
Smai, Franco, and A. Salvemini, to Montecatini Edison S.p.A. Process for the economical preparation of Br organoboron compounds. 3,397,241, 8-13-68, Cl. 260—606.5.
Small Business Administration: *See*—
Crandall, Charles L. 3,397,364.
Smiley, Robert W.: *See*—
Baker, Silveus M., and Smiley. 3,396,858.
Smith, Douglas W., to V-M Corp. Record adapter spindle. 3,396,973, 8-13-68, Cl. 274—10.
Smith, Edwin L., to Bell & Howell Co. Conveying belt with integral electric heater and sheet member holddown means. 3,397,303, 8-13-68, Cl. 219—545.
Smith, Floyd E. Lubricating system for a geneva motion apparatus. 3,396,611, 8-13-68, Cl. 74—820.
Smith, Harry A., to Dow Chemical Co. Poly[phenylene(difluoromethylene)sulfide]. 3,397,188, 8-13-68, Cl. 260—79.
Smith, Herbert Q., to Pennsalt Chemicals Corp. Process for controlling plant life. 3,397,052, 8-13-68, Cl. 71—97.
Smith, James A. Word construction game apparatus having numerical scoring feature. 3,396,972, 8-13-68, Cl. 273—135.
Smith, Joseph W., and C. W. Keene. Basic oxygen furnace lining construction. 3,396,962, 8-13-68, Cl. 266—43.
Smith Kline & French Laboratories: *See*—
Dunn, George L. 3,397,199.
Dunn, George L. 3,397,200.
Smith, Richard J., to General Electric Co. Floating ring viscous pump. 3,396,664, 8-13-68, Cl. 103—84.
Smith, Robert W., L. P. Glekas, J. E. Riley, and R. L. Swingle, to United States of America, National Aeronautics and Space Administration. Compact solar still. 3,397,117, 8-13-68, Cl. 202—234.
Snam Progetti S.p.A.: *See*—
Brambilla, Giovanni, and Neri. 3,397,257.
Snayberger, Clarence L., Jr.: *See*—
Snayberger, Clarence L., Sr. and C. L. Snayberger, Jr. 3,396,878.
Snayberger, Clarence L., Sr., and C. L. Snayberger, Jr. Folding device for flat goods. 3,396,878, 8-13-68, Cl. 223—37.
Sneider, Benjamin. Method of making a shoe construction. 3,396,416, 8-13-68, Cl. 12—146.
Snider, Gerald E.: *See*—
Boller, Ernest R., and Snider. 3,397,077.
Snyder, Ronald F.: *See*—
De Pugh, Chauncey C., and Snyder. 3,397,079.
Snyder, William T., to Nalco Chemical Co. Metal ingot mold with protective coating. 3,396,935, 8-13-68, Cl. 249—174.
Sobolev, Igor, to Shell Oil Co. Ester production. 3,397,227, 8-13-68, Cl. 260—486.
Societa'Applicazioni Gomma Antivibranti "(SAGA)" S.p.A.: *See*—
Boschi, Antonio, and Martorana. 3,396,555.
Societe Anonyme Andre Citroen: *See*—
Cadiou, Jean. 3,396,984.
Societe Anonyme dite: Societe Generale de Traction et d'Exploitations: *See*—
Aubert, Jean. 3,396,540.
Societe Rhodiaceta: *See*—
Boutonnet, Alexandre. 3,396,835.
Solheim, Karsten, to General Electric Co. Sheet stacking apparatus. 3,396,966, 8-13-68, Cl. 271—86.

Solovieff, George B.: *See*—
Russell, Fred J., and Solovieff. 3,396,424.
Solvay & Cie: *See*—
Ryckaert, Andre G., and Domen. 3,397,246.
Somers, Perrie D., Jr., and R. E. Mauseth, to International Milling Co., Inc. Process for preparing a flowable flour and product formed by said process. 3,397,066, 8–13–68, Cl. 99—93.
Sommer, Edmund T. Sailboat rigging. 3,396,689, 8–13–68, Cl. 114—98.
Sommers, John E.: *See*—
Adams, Floyd N., Cooper, and Sommers. 3,396,677.
Sontheimer, Heinrich, and A. J. Fischer, to Fuller Co. Method for thickening sludge. 3,397,143, 8–13–68, Cl. 210—49.
Sooryn, Vsevolod, to B. B. Doeh. Apparatus for producing silver nitrate. 3,397,133, 8–13–68, Cl. 204—208.
Souriau, Daniel. Mass flowmeter. 3,396,579, 8–13–68, Cl. 73—194.
Spencer, Gordon R.: *See*—
Davis, Warren C., and Spencer. 3,397,336.
Sperry Rand Corp.: *See*—
Blanshine, Allison W., Kline, Focht, and Wallin. 3,396,-767.
Spicer, Lyndon R., to International Standard Electric Corp. Fire warning cable. 3,397,373, 8–13–68, Cl. 337—412.
Spina, Joseph. Adjustable eyeglass retaining strap. 3,397,026, 8–13–68, Cl. 351—157.
Spitzer, Donald P., to American Cyanamid Co. Single phase ternary semiconducting compounds of silver or copper, thallium, and sulfur or selenium. 3,397,043, 8–13–68, Cl. 23—315.
Spooner, Howard E., and A. G. Bergmann, to Ingelhard Industries, Inc. Printer circuit board and method of manufacture thereof. 3,396,461, 8–13–68, Cl. 29—630.
Sprague, George S.: *See*—
Torley, Robert E., and Sprague. 3,397,186.
Spurlin, Harold M.: *See*—
Lukach, Carl A., and Spurlin. 3,397,195.
Squibb, E. R., & Sons, Inc.: *See*—
Diassi, Patrick A. 3,397,213.
Stacknole Carbon Co.: *See*—
Bang, Mogens W. 3,397,374.
Stafford, Donald C., to Chicago Bridge & Iron Co. Modular suppression tanks for nuclear containment structures. 3,397,113, 8–13–68, Cl. 176—37.
Stafford, John A., to Schlumberger Technology Corp. Recorder and processor for use in well logging. 3,397,405, 8–13–68, Cl. 346—108.
Stahl, Nils E. J., and O. U. Larsson. Arrangement in receipt-issuing machines. 3,396,657, 8–13–68, Cl. 101—66.
Stahlheber, Norman E.: *See*—
Shen, Chung Y., and Stahlheber. 3,397,035.
Stahlwerke Bruninghaus G.m.b.H.: *See*—
Hildebrand, Fritz. 3,396,956.
Standard Machine & Mfg. Co.: *See*—
McDougall, Franklin M. 3,396,937.
Stanford Research Institute: *See*—
Minnick, Robert C. 3,397,390.
Stanley, Robert K., to Techniservice Corp. Strand treatment process and apparatus. 3,396,443, 8–13–68, Cl. 28—1.
Starr, Richard A. Window washer. 3,396,417, 8–13–68, Cl. 15—29.
Stauffer Chemical Co.: *See*—
Walsh, Edward N. 3,397,269.
Stauffer, Larry R.: *See*—
Paullus, Clarence L., and Stauffer. 3,397,279.
Steel, Francis R., and G. R. Gawell, to Motorola, Inc. Temperature compensated crystal oscillator. 3,397,367, 8–13–68, Cl. 331—116.
Steelcraft Corp.: *See*—
Ford, Lewis M. 3,396,683.
Stefcik, Andrew, and J. P. G. Beiswanger, to GAF Corp. Herbicidal concentrate composition. 3,397,051, 8–13–68, Cl. 71—97.
Stein, Clinton L., and E. L. Redlin; said Redlin assor. to said Stein. Sign frame. 3,396,483, 8–13–68, Cl. 40—125.
Steinacker, Peter, to Westfalia Separator Aktiengesellschaft. Method and apparatus for sensing the fullness of the mud chamber in a centrifugal separator. 3,396,910, 8–13–68, Cl. 233—20.
Stella, Leo: *See*—
Day, Roger E., Metzger, and Stella. 3,397,019.
Stettner, Ernest R., to General Motors Corp. Carburetor air valve vacuum damper. 3,396,948, 8–13–68, Cl. 261—23.
Stevens, Eric S., to ACF Industries, Inc. Dual hopper outlet closure structure. 3,396,675, 8–13–68, Cl. 105—280.
Stevens, J. P., & Co., Inc.: *See*—
Hopkins, John G., and Glacken. 3,396,445.
Stibbe, G., & Co. Ltd.: *See*—
Sutton, Jack. 3,397,292.
Stilwell, George R., Jr.: *See*—
Abramson, Paul, Chin, and Stilwell. 3,397,388.
Stimpson, James W.: *See*—
Mather, John, Stimpson, and O'Neill. 3,397,032.
Stober, Wilhelm: *See*—
Stober, Paul and W. 3,396,588.
Stober, Paul and W., to Gebruder Stober Maschinenfabrik. Infinitely variable friction cone transmission. 3,396,588, 8–13–68, Cl. 74—190.
Stockton, Thomas R., to Ford Motor Co. Positive drive traction differential with inertia disc. 3,396,609, 8–13–68, Cl. 74—711.
Stol, Walter T., to Boyne Products, Inc. Apparatus for operating progressive direction signaling devices. 3,397,294, 8–13–68, Cl. 200—61.3.
Stolton, Ralph E., to Shell Oil Co. Curing agent composition and use in curing polyepoxides. 3,397,177, 8–13–68, Cl. 260—47.
Stone, Daniel G.: *See*—
Beebe, Norman P., Wase, and Stone. 3,396,699.
Stone, David W., to Harnischfeger Corp. Speed limit control system. 3,397,309, 8–13–68, Cl. 246—182.
Stosberg, Arturo E., and D. A. Horstkorta, to MVR Corp. (formerly known as Machtronics, Inc.). Single picture selector system. 3,397,283, 8–13–68, Cl. 178—6.6.
Stoy, Vladimir: *See*—
Stoy, Artur and V. 3,397,262.
Stoy, Artur and V. Method for continuous polymerization and copolymerization of acrylonitrile in concentrated aqueous inorganic salt solutions. 3,397,262, 8–13–68, Cl. 264—182.
Strauss, Eric L.: *See*—
Kramer, Irvin R., and Strauss. 3,397,168.
Strom, Nils-Erik: *See*—
Helsing, Erik, and Strom. 3,397,277.
Strouse, Melvin W., and L. D. Vincent, to Owens-Illinois, Inc. Composite container and sealing means therefor. 3,396,899, 8–13–68, Cl. 229—43.
Strout, Russell B., and J. W. Harrison, to Lowry Development Corp. Internally expansible trap. 3,396,752, 8–13–68, Cl. 138—27.
Studebaker Corp.: *See*—
Brosene, William G., Jr. 3,397,015.
McCarroll, Raymond A. 3,396,772.
Stutz, Otto T., to Heberlein Patent Corp. Elastic yarn process and product. 3,396,529, 8–13–68, Cl. 57—140.
Sugimoto, Yoshimi: *See*—
Hatakeyama, Hiroyuki, and Sugimoto. 3,396,748.
Sullivan, Robert T.: *See*—
Bishop, Donald R., and Sullivan. 3,396,649.
Sulzer Bros. Ltd.: *See*—
Ergenc, Mehmet S., and Liem. 3,396,784.
Sumitomo Chemical Co., Ltd.: *See*—
Takagi, Kazumi, and Tsunokawa. 3,397,232.
Sundstrand Corp.: *See*—
Baits, Stephen S. 3,396,670.
Ross, William A. 3,396,607.
Sutton, Jack, to G. Stibble & Co. Ltd. Visual programming apparatus. 3,397,292, 8–13–68, Cl. 200—6.
Suzuki, Tom J. Protector for safety razor. 3,396,466, 8–13–68, Cl. 30—90.
Swamer, Frederick W.: *See*—
Hummel, Donald G., and Swamer. 3,397,248.
Swidler, Ronald: *See*—
Brown, Louise H., and Swidler. 3,397,152.
Swift, Harold E., to Gulf Research & Development Co. Process for polymerization of alpha-olefins using CCl_4 and AlR_3 with (1) low temperature high ionizing radiation or (2) iron or niobium halides. 3,397,194, 8–13–68, Cl. 260—85.3.
Swingle, Robert L.: *See*—
Smith, Robert W., Glekas, Riley, and Swingle. 3,397,117.
Sylvania Electric Products Inc.: *See*—
Neal, Charles B., and Poel. 3,397,340.
Symes, William F., and S. Vazopolos, to Monsanto Co. Methods of producing chlorocyanuric acids. 3,397,203, 8–13–68, Cl. 260—248.
Symons Mfg. Co.: *See*—
Bowden, George F. 3,396,936.
Syro Steel Co.: *See*—
Di Margio, Nicholas A., and Silver. 3,396,451.
Tado, Hiroshi, to Yanmer Diesel Engine Co., Ltd. Oiltight sealing device for rotary piston engines. 3,396,708, 8–13–68, Cl. 123—8.
Tahara, Hideo. Apparatus for blow molding thermoplastic plastics. 3,396,428, 8–13–68, Cl. 18—5.
Takagi, Kazumi, and T. Tsunokawa, to Sumitomo Chemical Co., Ltd. Method of inhibiting polymerization of acrylamide. 3,397,232, 8–13–68, Cl. 260—561.
Takami, Masaho. Tape fusing device. 3,397,105, 8–13–68, Cl. 156—494.
Takigawa, Bin, N. Sakamoto, and S. Miyoshi, to Denki Kagaku Kogyo Kabushiki Kaisha. Non-blocking water-soluble polyvinyl alcohol films. 3,397,162, 8–13–68, Cl. 260—23.
Talsma, Herbert, to E. I. du Pont de Nemours and Co. Preparation of alumina-supported catalyst compositions and the products thereof. 3,397,154, 8–13–68, Cl. 252—463.
Tanaka, Atsushi, Y. Hozumi, and K. Hatada, to Dai Cellu Kabushiki Kaisha. Method for producing crystalline aldehyde copolymers. 3,397,183, 8–13–68, Cl. 260—67.
Tani, Shoichi, to Yawata Iron & Steel Co., Ltd. Elevatable and rotatable railway truck. 3,396,674, 8–13–68, Cl. 105—157.
Tanner, De Loss J., to Motorola, Inc. Television camera sync generator which derives sync signals from the horizontal and vertical sweep circuits. 3,397,284, 8–13–68, Cl. 178—69.5.
Tapley, John G., to Imperial Chemical Industries, Ltd. Electrolytic processes. 3,397,125, 8–13–68, Cl. 204—3.
Tate Architectural Products, Inc.: *See*—
Tate, Donald L. 3,396,501.
Tate, Donald L., to Tate Architectural Products, Inc. Elevated floor system of grounded metal panels. 3,396,501, 8–13–68, Cl. 52—173.
Taylor, Gerald P. Tape combination measure. 3,396,471, 8–13–68, Cl. 33—127.
Taylor, Harold M.: *See*—
Van Heyningen, Earle M., and Taylor. 3,397,273.
Taylor, Raymond G., Jr.: *See*—
Grant, John C., and Taylor. 3,397,017.
Taylor, Robert C., and A. S. Brittain, to Ratby Engineering Co. Ltd. Yarn feeding mechanisms for flat bed knitting machines. 3,396,558, 8–13–68, Cl. 66—132.

Taylor, Thomas I., and I. W. Ruderman, to Isomet Corp. Metabolic rate meter and method. 3,396,719, 8–13–68, Cl. 128—2.07.
Technical Rubber Co., The: *See*—
Christie, John A. 3,397,100.
Technion Research and Development Foundation, Ltd.: *See*—
Uri, Joseph B., Erlicki, and Schieber. 3,397,361.
Techniservice Corp.: *See*—
Stanley, Robert K. 3,396,443.
Telefonaktiebolaget L M Ericsson: *See*—
Jacob, Walter E. W. 3,397,368.
Teletype Corp.: *See*—
Dunlavey, Robert J. 3,397,345.
Nordin, Robert W. 3,396,457.
Tensolite Insulated Wire Co., Inc.: *See*—
Greyson, William L. 3,397,046.
Teranishi, Masayuki: *See*—
Fujimoto, Yasuo, and Teranishi. 3,397,129.
Tessmann, Richard K.: *See*—
Miller, Wendell E., Walter, and Tessmann. 3,396,536.
Tetenbau, Marvin T., to Allied Chemical Corp. Anionic polymerization of lactams with a carbonate diester containing N-heterocyclic substituent as promoter. 3,397,185, 8–13–68, Cl. 260—78.
Teves, Alfred: *See*—
Meier, Ernst. 3,396,824.
Teves, Alfred, Firma: *See*—
Bender, Alfred. 3,396,751.
Teves, Alfred, K.G.: *See*—
Wintterlin, Max O., Ostwald, and Varga. 3,396,741.
Texas Instruments Inc.: *See*—
Barney, George M. 3,397,397.
Jastram, Edward P., and Landis. 3,397,333.
Thigpen, James B. Flaring toolholder. 3,396,562, 8–13–68, Cl. 72—71.
Thiokol Chemical Corp.: *See*—
De Pugh, Chauncey C., and Snyder. 3,397,079.
Thomas, Walter J., Sr., to International Minerals & Chemical Corp. Method of making a refractory brick. 3,396,453, 8–13–68, Cl. 29—421.
Thomas, William C.: *See*—
Morse, John E., and Thomas. 3,396,732.
Thomson, Henry A., V. J. Witkowski, and P. N. Crawford, to Eastman Kodak Co. Mechanism for positioning rollers and transducer means relative to a film strip. 3,397,290, 8–13–68, Cl. 179—100.2.
Thompson, Jennings B.: *See*—
Funk, Charles F. 3,396,776.
Thorson, John R.: *See*—
Wilkinson, William H., and Thorson. 3,396,605.
Thow, Lawrence E.: *See*—
Slater, William W., and Thow. 3,397,159.
Timken Roller Bearing Co., The: *See*—
Edwards, Herbert C. 3,397,020.
Fitzsimmons, Brian. 3,397,021.
Otto, Dennis L. 3,396,975.
Timmerman, Maurice G. G. Tractor cab. 3,397,008, 8–13–68, Cl. 296—28.
Titus, Charles H.: *See*—
Darrow, Kenneth G., and Titus. 3,397,293.
Tlaker, Erich, to The Fellows Gear Shaper Co. Method of forming profiled objects. 3,396,563, 8–13–68, Cl. 72—118.
Tobey, Stephen W., to The Dow Chemical Co. Extraction apparatus. 3,397,115, 8–13–68, Cl. 202—169.
Toepfl, Rosemarie, and A. Maeder, to Ciba Ltd. Polymers of carbonamides containing sulfonamide groups. 3,397,190, 8–13–68, Cl. 260—79.3.
Tokyo Sanyo Electric Co., Ltd.: *See*—
Oya, Iwao. 3,396,903.
Toledo Heater Co.: *See*—
Miller, Peter J. 3,396,569.
Torley, Robert E., and G. S. Sprague, to American Cyanamid Co. Triaminoguanidinium salts of 5-vinyltetrazole polymers and a method for their preparation. 3,397,186, 8–13–68, Cl. 260—78.4.
Totani, Hideo: *See*—
Ishii, Ryuichi, and Totani. 3,397,287.
Trane Co., The: *See*—
Newton, Earl W. 3,396,906.
Treiss, George. Double edge injector razor. 3,396,464, 8–13–68, Cl. 30—63.
Trepanier, Donald L., to The Dow Chemical Co. 5,6-dihydro-2-(substituted)-6-phenyl-3,4,5-trimethyl-4H-1,3,4-oxadiazinium halides. 3,397,201, 8–13–68, Cl. 260—244.
Trexler, Philip C., to The Charles River Breeding Laboratories, Inc. Container for live gnotobiotic axenic animals. 3,396,701, 8–13–68, Cl. 119—15.
Triad Enterprises: *See*—
Fradenas, Fernando. 3,396,482.
Trotter, Percy W.: *See*—
Grammer, George N., and Trotter. 3,397,148.
Troutman, Lena L. Temperature control hot and cold water faucet attachment. 3,396,749, 8–13–68, Cl. 137—603.
Trussell, Harry B. Poultry growing process and apparatus. 3,396,702, 8–13–68, Cl. 119—17.
Trussell, Harry B. Poultry hatching apparatus. 3,396,703, 8–13–68, Cl. 119—30.
Tsarnas, Nicholas. Aerator for water-containing vessel. 3,396,-949, 8–13–68, Cl. 261—64.
Tsunazawa, Mamoru, to Ishikawajima-Harima Jukogyo Kabushiki Kaisha. Power transmission for an amphibious vehicle. 3,396,690, 8–13–68, Cl. 115—1.
Tsunokawa, Tamio: *See*—
Takagi, Kazumi, and Tsunokawa. 3,397,232.
Tube Products Ltd.: *See*—
Hale, James. 3,397,295.
Tuck, Robert M., to General Motors Corp. Power transmission. 3,396,606, 8–13–68, Cl. 74—677.
Tulleners, Anthony J., and R. H. Hass, to Union Oil Co. of California. Method and apparatus for treating exhaust gases. 3,397,034, 8–13–68, Cl. 23—2.
Turner, Denys G.: *See*—
Balkin, Mark, Turner, and Irving. 3,396,978.
Balkin, Mark, Turner, and Irving. 3,396,979.
Turner Hall Corp.: *See*—
Shansky, Albert. 3,396,736.
Turner, Robert B., to The Dow Chemical Co. Method of desorbing vaporizable liquids from sorptive material. 3,396,473, 8–13–68, Cl. 34—1.
Tushaus, Leonard A.: *See*—
Slagel, Robert C., and Tushaus. 3,397,175.
Tyler Co., The: *See*—
Murphy, Francis A. 3,396,497.
Uchida, Motokazu: *See*—
Hori, Eiichi, and Uchida. 3,397,330.
Udylite Corp., The: *See*—
Koltuniak, Michael A., and Urquhart. 3,396,780.
Uhlir, Arthur, Jr., to Microwave Associates, Inc. Harmonic generator and frequency multiplier biasing system. 3,397,-369, 8–13–68, Cl. 332—52.
Unarco Industries, Inc.: *See*—
Bezlaj, Frank A., and Panko. 3,396,603.
Underwriters Safety Device Co.: *See*—
Ege, Hans. 3,397,320.
Union Carbide Corp.: *See*—
Cariou, Frank E., Loeb, and Valley. 3,397,085.
Cupper, Robert A., and Ranney. 3,397,146.
Forman, Ralph, Ghormley, and Cummerow. 3,397,327.
Pickert, Paul E., and Bolton. 3,397,137.
Urbutis, Algimantas P., Schenk, Risany, and Marbach. 3,397,069.
Welch, Frank J., and Paxton. 3,397,216.
Wynstra, John, and Gardikes. 3,397,254.
Union Oil Co. of California: *See*—
Eaton, Ben A. 3,396,790.
Fenton, Donald M. 3,397,225.
Fenton, Donald M. 3,397,226.
Martinek, Thomas W. 3,397,147.
Martinek, Thomas W. 3,397,264.
Tulleners, Anthony J., and Hass. 3,397,034.
Uniroyal, Inc.: *See*—
Geyer, Paul. 3,396,429.
United Aircraft Corp.: *See*—
Dean, James C. 3,396,597.
Wetherbee, Arthur E., Jr. 3,396,538.
United States of America
Army: *See*—
Grayson, Lawrence P., and Boyden. 2,397,362.
Pisano, Frank T., and Pitney. 3,397,030.
Scanlon, John J., Jr., and Quinlan. 3,396,658.
Woodward, Kenneth E. 3,396,631.
Atomic Energy Commission: *See*—
Browning, Melvin F., and Wilson. 3,397,075.
Cress, Hobart A., and Walls. 3,396,893.
Kircher, John G., McFarling, Wyant, and Kahler. 3,397,131.
Nelson, Ira V. 3,397,298.
Rivers, Ronald D. 3,397,041.
National Aeronautics and Space Administration: *See*—
Sinclair, Archibald R., and Russell. 3,397,318.
Smith, Robert W., Glekas, Riley, and Swingle. 3,397,-117.
Commerce: *See*—
Henig, Seymour, and Palasky. 3,397,392.
Interior: *See*—
Brantley, Francis E., and Rampacek. 3,397,130.
Lakin, Hubert W., and Nakagawa. 3,397,040.
United States Steel Co.: *See*—
McLain, William R. 3,396,684.
Sandbrook, Dean E. 3,396,953.
United States Time Corp., The: *See*—
Meitinger, Heinz, and Egger. 3,396,531.
Unitek Corp.: *See*—
Diepeveen, John C. 3,396,856.
Universal Drafting Machine Corp.: *See*—
Little Charles H., Kliever, and Wiemels. 3,396,679.
Universal Oil Products Co.: *See*—
Cyba, Henry A. 3,397,144.
University of Minnesota, Regents of the, The: *See*—
Lande, Arnold J., and Lillehei. 3,396,849.
Updike, Myron: *See*—
Dohms, Otto P., and Updike. 3,396,486.
Upjohn Co., The: *See*—
Hunter, James H. 3,397,268.
Urbutis, Algimantas P., B. H. Schenk, J. J. Risany, and W. V. Marbach, to Union Carbide Corp. Coherent self-sustaining stick of shirred and compressed tubular sausage casing. 3,397,069, 8–13–68, Cl. 99—176.
Uri, Joseph B., M. S. Erlicki, and D. Schieber, to Technion Research and Development Foundation, Ltd. Magnetic amplifier utilized as a static constant current regulator. 3,397,-361, 8–13–68, Cl. 330—8.
Urquhart, Thomas N.: *See*—
Koltuniak, Michael A., and Urquhart. 3,396,780.
Veb Tabak- und Industriemaschinen Dresden: *See*—
Geyer, Herbert, and Minar. 3,396,506.
V-M Corp.: *See*—
Smith, Douglas W. 3,396,973.
Varta Aktiengesellschaft: *See*—
Bode, Hans, and Jung. 3,397,128.
Vail, Richard C.: *See*—
Prifogle, John S., and Vail. 3,397,383.
Valbjorn, Knud V., to Danfoss A/S. Refrigerant compressor with sound absorbing structure. 3,396,907, 8–13–68, Cl. 230—232.

Valette, Raymond, to Les Laboratoires Albert Rolland. Eucalyptol derivatives. 3,397,212, 8-13-68, Cl. 260—345.1.
Valley, David J.: See—
Cariou, Frank E., Loeb, and Valley. 3,397,085.
Valve Corp. of America: See—
Harrison, Mortimer J. 3,397,027.
Valyi, Emery I., to Olin Mathieson Chemical Corp. Heating unit. 3,396,782, 8-13-68, Cl. 165—110.
Van Beukering, Henricus C. J.: See—
Reinhoudt, Jacobus P., Marks, and Van Beukering. 3,396,976.
Van De Walle, Therese: See—
Fourcade, Robert, and Van De Walle. 3,397,170.
Van Dyke, Burton: See—
Arnold, Alanson J., B. and D. Van Dyke, and Porter. 3,397,259.
Van Dyke, Don: See—
Arnold, Alanson J., B. and D. Van Dyke, and Porter. 3,397,259.
Varga, Dezso: See—
Wintterlin, Max O., Ostwald, and Varga. 3,396,741.
Van Heyningen, Earle M., and H. M. Taylor, to Eli Lilly and Co. Controlling phytopathogenic fungi on plants with 3-pyridyl methane derivatives. 3,397,273, 8-13-68, Cl. 424—263.
Van Loon, Arie, and H. W. H. M. Roncken, to Chemische Fabriek L. van der Grinteen, N.V. Diazotype material. 3,397,058, 8-13-68, Cl. 96—49.
Van Meurs, Pieter, and C. W. Volek, to Shell Oil Co. Steam drive for incompetent tar sands. 3,396,791, 8-13-68, Cl. 166—11.
Vann, Roy R., to Schlumberger Technology Corp. Depth control methods and apparatus. 3,396,787, 8-13-68, Cl. 166—4.
Van Pernis, John M., to Black Products Co. Bag filling machine. 3,396,763, 8-13-68, Cl. 141—68.
Van Schendelen, Johannes C. P. Clamping band for hoses. 3,396,440, 8-13-68, Cl. 24—279.
Varian Associates: See—
Beaver, William L., and Mullen. 3,397,339.
Vayda, William C., to General Cable Corp. Magnetic bobbin holding device. 3,396,919, 8-13-68, Cl. 242—129.7.
Vazopolos, Steve: See—
Symes, William F., and Vazopolos. 3,397,203.
Veb Elektrogeratewerk Suhl: See—
Neumann, Roland, Wunschmann, and Ehrhardt. 3,396,463.
Venghiattis, Alexis A., to Dresser Industries, Inc. Tubing cutter. 3,396,795, 8-13-68, Cl. 166—55.7.
Verdery, Holcombe M., Jr. Belt transmission device. 3,396,590, 8-13-68, Cl. 74—220.
Vick, Harvey H.: See—
Wakefield, George P., Vick, and Buckner. 3,397,308.
Victor Comptometer Corp.: See—
Estep, Shelby L. 3,396,971.
Viecell, Angelo. Automatic steam bath washer and dryer apparatus. 3,396,411, 8-13-68, Cl. 4—164.
Vincent, Etienne H. Method and apparatus for loading trucks by gravity. 3,396,859, 8-13-68, Cl. 214—41.
Vincent, Larry D.: See—
Strouse, Melvin W., and Vincent. 3,396,899.
Vind, Holger V., to Danfoss A/S. Hermetically sealed cooling machine. 3,396,908, 8-13-68, Cl. 230—235.
Voetter, Ulrich E., to Schlumberger Technology Corp. Fluid-sampling apparatus. 3,396,796, 8-13-68, Cl. 166—100.
Vogel, Clifford E. Apparatus for the harvesting of tobacco. 3,396,520, 8-13-68, Cl. 56—27.5.
Von Bethmann, Max F., G. Lipp, and H. Bayer, to Eresta Warenhandelsgesellschaft mit beschrankter Haftung. Continuous process of removing nicotine from tobacco. 3,396,735, 8-13-68, Cl. 131—143.
Voss, Allen M., to Western Electric Co., Inc. Method of cleaning a molded plastic article. 3,396,495, 8-13-68, Cl. 51—320.
Wacome, Donald M.: See—
Goodman, Donald, Isgur, and Wacome. 3,397,165.
Wahrem, Douglas: See—
Kubat, Josef, Pattyranie, Wahrem, Almin, Andersson, and Johanson. 3,396,850.
Wakefield, George P., H. H. Vick, and N. Buckner, to International Telephone and Telegraph Corp. Lighting fixture. 3,397,308, 8-13-68, Cl. 240—128.
Waldorf Paper Products Co.: See—
Skundberg, James O. 3,396,578.
Waldorff, Jorgen F., to Danfoss A/S. Rotary devices. 3,396,668, 8-13-68, Cl. 103—131.
Walker, James H., ½ to L. L. Dills, and ½ to R. W. Callaway. Stamp dispensing machine. 3,396,886, 8-13-68, Cl. 225—11.
Walker, Melvin F., to Designatronics, Inc. Anti-backlash means for gear trains. 3,396,594, 8-13-68, Cl. 74—409.
Waller, John G.: See—
Pearl, David L., Waller, and Head. 3,396,895.
Wallin, Robert E.: See—
Blanshine, Allison W., Kline, Focht, and Wallin. 3,396,767.
Walls, James T.: See—
Cress, Hobart A., and Walls. 3,396,893.
Walsh, Edward N., to Stauffer Chemical Co. Method for controlling pests selected from insects and mites with phosphoro-mono or dithioates and thiocarbonates. 3,397,269, 8-13-68, Cl. 424—205.
Walter, Norman L.: See—
Miller, Wendell E., Walter, and Tessmann. 3,396,536.
Walther, Emil, K. Schmidt, and H.-C. Grassman, to Siemens Aktiengesellschaft. Capacitive heating apparatus for drying an object having a dielectric value and geometrical dimensions which vary as such object is dried. 3,396,474, 8-13-68, Cl. 34—1.
Ward, Obediah C. Furniture leg construction. 3,396,933, 8-13-68, Cl. 248—431.
Ward Mfg., Inc.: See—
Scheid, Richard W. 3,397,007.
Ward, Peter W.: See—
Barnaby, Bernard S., Ward, and Morcombe. 3,397,371.
Ward, William J., and W. L. Robb, to General Electric Co. Liquid membranes for use in the separation of gases. 3,396,510, 8-13-68, Cl. 55—16.
Warren Petroleum Corp.: See—
Bacon, Kenneth H. 3,397,138.
Warren, Raymond W.: See—
Bowles, Romald E., and Warren. 3,396,619.
Warrick, Edward C., and E. J. Niehaus, Jr., to Rockwell Mfg. Co. Electric motor control and clutch. 3,396,826, 8-13-68, Cl. 192—.02.
Warriner, Joseph F.: See—
Baxter, Allan S., Warringer, and Jeffery. 3,396,819.
Wase, Ivan W., Jr.: See—
Beebe, Norman P., Wase, and Stone. 3,396,699.
Watanabe, Nobustsu: See—
Yoshizawa, Shiro, and Watanabe. 3,397,087.
Watson, Edward J., Jr., to The Norwich Pharmacal Co. N-2,3-butadienyl-N-methylbenzylamine or the 2-chloro-derivative thereof. 3,397,236, 8-13-68, Cl. 260—570.9.
Webb, Darrel D., to Houston Engineers, Inc. Washover tool, pipe cutter and retriever. 3,396,794, 8-13-68, Cl. 166—55.6.
Webb, James E., administrator of The National Aeronautics and Space Administration with respect to an invention of S. G. Ellis. Method of changing the conductivity of vapor deposited gallium arsenide by the introduction of water into the vapor deposition atmosphere. 3,397,094, 8-13-68, Cl. 148—174.
Weber, Eduard: See—
Fracke, Aribert, Kelin, Pieper, and Weber. 3,396,511.
Welford, George W., Jr. Elevator safety rail and door control. 3,396,821, 8-13-68, Cl. 187—52.
Weigert, Wolfgang: See—
Schuler, Wilhelm A., Bader, Rink, and Weigert. 3,397,172.
Weil, Edward D., and E. Dorfman, to Hooker Chemical Corp. Method for the control of plant growth. 3,397,055, 8-13-68, Cl. 71—115.
Weimer, Paul K., to Radio Corp. of America. Sensor array coupling circuits. 3,397,325, 8-13-68, Cl. 307—251.
Weiner, Seymour L., to Barnes Engineering Co. Infrared imaging system comprising an array of immersed detector elements. 3,397,314, 8-13-68, Cl. 250—83.
Weinhold, Karl. Quick coupling device for hoses. 3,396,993, 8-13-68, Cl. 285—114.
Weinstein, Alex J.: See—
Rouy, Auguste L. M. A., and Weinstein. 3,396,627.
Weinstein, Harold, to International Rectifier Corp. Process for diffusion of contoured junction. 3,396,456, 8-13-68, Cl. 29—580.
Weiss, Ernst, to Heberlein Patent Corp. Permanently crimped, elastic chemically modified cotton yarns. 3,396,528, 8-13-68, Cl. 57—139.
Weiss, Ernst, to Heberlein Patent Corp. Method for producing permanently crimped, elastic chemically modified cotton yarns. 3,396,530, 8-13-68, Cl. 57—156.
Welch, Eldred, to GAF Corp. Nitration of benzoic acid and its chlorinated derivatives. 3,397,229, 8-13-68, Cl. 260—515.
Welch, Frank J., and H. J. Paxton, Jr., to Union Carbide Corp. Coordination complexes to metal halides and pentavalent phosphorus compounds. 3,397,216, 8-13-68, Cl. 260—429.5.
Wellman, William E.: See—
Diana, William D., Wellman, and Burton. 3,397,120.
Welty, Lloyd G., and S. J. Sluter, ½ to Welty, and ½ to Sluter. Fabrication of slag surfaces and structures. 3,396,641, 8-13-68, Cl. 94—22.
Werner, James C., to Gulf Oil Corp. Process for preparing smooth nylon film. 3,397,263, 8-13-68, Cl. 264—216.
Westcott, Robert F., to The Dow Chemical Co. Method and apparatus for forming double walled containers. 3,396,430, 8-13-68 Cl. 18—19.
Westcott, Robert F.: See—
Schaefer, Harold F., and Westcott. 3,397,068.
Westercamp, Kenneth L., to General Motors Corp. Retaining ring for universal joint member. 3,396,554, 8-13-68, Cl. 64—7.
Western Electric Co., Inc.: See—
Voss, Allen M. 3,396,495.
Westfalia Separator Aktiengesellschaft: See—
Steinacker, Peter. 3,396,910.
Westinghouse Electric Corp.: See—
Gallagher, Robert C., and Donovan. 3,397,326.
Westman, Robert A.: See—
Jensen, Niels H., Westman, and Fogleman. 3,396,778.
Wetherbee, Arthur E., Jr., to United Aircraft Corp. Water injection for thrust augmentation. 3,396,538, 8-13-68, Cl. 60—263.
Wetmore, Judson D., to Raychem Corp. Method of making a connection. 3,396,460, 8-13-68, Cl. 29—629.
Wey, Raymond: See—
Guth, Jean L., and Wey. 3,397,142.
Weyland, Carl M., and R. J. Getz, to Magikitch'n Equipment Corp. and Quakertown Stove Works Inc. Cooking appliance with tilting grid. 3,396,716, Cl. 126—41.
Whately, Walter R.: See—
Roberts, George L., Jr., Bragg, and Whately. 3,397,037.
Wheeldon, John B.: See—
Highton, Allan P., and Wheeldon. 3,397,112.
Wheeler, George V. Powder dispenser for printed webs. 3,396,872, 8-13-68, Cl. 222—193.

Wherry, Rixey B. Container closure and carrying device. 3,397,003, 8-13-68, Cl. 294—87.2.
Whetmore, Henry J., to Humphreys & Glawgow Ltd. Process and apparatus for the recovery of waste heat. 3,396,781, 8-13-68, Cl. 165—103.
Whirlpool Corp.: See—
Blatchford, John K. 3,396,682.
Buchser, William J. 3,396,552.
White, James W.: See—
Borer, Herbert W., Profit, and White. 3,396,863.
White, Robert L. Clamp. 3,396,438, 8-13-68, Cl. 24—243.
White, Thomas L., to Commercial Shearing & Stamping Co. Tunnel liners. 3,396,543, 8-13-68, Cl. 61—45.
Wiemels, Eugene L.: See—
Little, Charles H., Kliever, and Wiemels. 3,396,679.
Wight, Robert D.: See—
Zeigler, Philip B., and Wight. 3,396,600.
Wiktor, Tadeusz J.: See—
Fernandes, Marie V., Koprowski, and Wiktor. 3,397,267.
Wilcox, Richard, and J. A. Beaman, to Arvin Industries, Inc. Acoustic quarter wave tube. 3,396,812, 8-13-68, Cl. 181—48.
Wilkinson, Robert E., to Rostone Corp. Abrasion-resistant mineral-filled thermosetting molding composition. 3,397,169, 8-13-68, Cl. 260—37.
Wilkinson, William H., and J. R. Thorson, to Mobil Oil Corp. Drive axle. 3,396,605, 8-13-68, Cl. 73—650.
Will, Helmut: See—
Ottaway, Gerald H., Painke, Scheler, Will, and Wright. 3,397,391.
Williams, Donald D.: See—
Rosen, Harold A., and Williams. 3,396,920.
Williams, Olin E., to Sinclair-Koppers Co. Process for extruding spherical expandable particles. 3,397,258, 8-13-68, Cl. 264—9.
Willis, Frank M., to E. I. du Pont de Nemours and Co. Electrically fired explosive fasteners. 3,396,623, 8-13-68, Cl. 85—65.
Wilson, Clayton W.: See—
Workman, Norman, and Wilson. 3,396,876.
Wilson, Jean P.: See—
Dickie, Robert J., and Wilson. 3,396,925.
Wilson, Wilbur J.: See—
Browning, Melvin F., and Wilson. 3,397,075.
Windecker, Leo J., to The Dow Chemical Co. Spar and wing structure therefrom. 3,396,922, 8-13-68, Cl. 244—123.
Windecker, Leo J., to The Dow Chemical Co. Structure and method for the fabrication thereof. 3,396,923, 8-13-68, Cl. 244—123.
Winkelmann, Franz: See—
Luckey, Heribert, and Winkelmann. 3,396,834.
Winklepleck, Roy G.: See—
Hurst, Thomas B., and Winklepleck. 3,396,514.
Winkler, William K., and E. E. Pickerrell, to General Electric Co. Track system for shutter of windowed oven door. 3,396,717, 8-13-68, Cl. 126—200.
Winter, Heinz W.: See—
Kemnitz, Robert H., and Winter. 3,396,916.
Winter, Joseph, to Olin Mathieson Chemical Corp. Composite metal article, 3,397,045, 8-13-68, Cl. 29—191.
Winterbottom, Robert, P. Bitha, and H. M. Kissman, to American Cyanamid Co. Nitration of tetracyclines. 3,397,230, 8-13-68, Cl. 260—559.
Winterbottom, Ross C., to Hughes Aircraft Co. Voice operated communication system. 3,397,401, 8-13-68, Cl. 343—177.
Wintterlin, Max O., F. Ostwald, and D. Varga, to Alfred K. G. Teves. Switching valve for fluid system. 3,396,741, 8-13-68, Cl. 137—115.
Wisely, Harriet R.: See—
Girard, Roland T., Sims, and Wisely. 3,397,080.
Wisman, Franklin O., to The Reliance Electric and Engineering Co. Magnetic amplifier control system with reset circuit. 3,397,354, 8-13-68, Cl. 323—22.
Wiswall, Lawrence S.: See—
Kampas, George S., and Wiswall. 3,396,585.
Witkowski, Victor J.: See—
Thomson, Henry A., Witkowski, and Crawford. 3,397,290.
Witwer, Wallace J., and J. V. Wright, to Hein-Werner Corp. Excavator and grader or crane apparatus. 3,396,860, 8-13-68, Cl. 214—141.
Wolfendale, Eric, to Racal Communications Ltd. Electric motors including a rotor fed from an external commutation system. 3,397,351, 8-13-68, Cl. 318—138.
Wolgast, Raymond P. Portable resistance spot welder. 3,397,322, 8-13-68, Cl. 307—141.
Wolinski, Leon E., to E. I. du Pont de Nemours, and Co. Treatment of metal surfaces. 3,397,132, 8-13-68, Cl. 204—165.
Wood, Elmer R. Diffuser for sewage treatment 3,396,950, 8-13-68, Cl. 261—122.
Wood, Harold R. Apparatus for measuring freeboard in choppy water. 3,396,470, 8-13-68, Cl. 33—126.5.
Wood, John M.: See—
Ford, John F., and Wood. 3,397,219.
Woodward, Elbirt A.: See—
Fraser, Relmond P., Jr., and Woodward. 3,396,970.
Woodward, Gary F., to American Standard Inc. Fan speed control means employing a vibrating contact. 3,397,352, 8-13-68, Cl. 318—346.
Woodward, Kenneth E., to United States of America, Army. Fluid driven engine with improved fluid amplifier valve means. 3,396,631, 8-13-68, Cl. 91—3.
Wooll, Warren W., Jr.: See—
Millhiser, Robert G., and Wooll. 3,396,844.
Workman, Norman and C. W. Wilson. Liquid food container. 3,396,876, 8-13-68, Cl. 222—474.
Wright, Donald R., to The Dow Chemical Co. Extensible element. 3,396,601, 8-13-68, Cl. 74—501.
Wright, Donald R., to The Dow Chemical Co. Method and apparatus for perforating thermoplastic foams, 3,396,616, 8-13-68, Cl. 83—16.
Wright, Jay V.: See—
Witwer, Wallace J., and Wright. 3,396,860.
Wright Machinery Co., Inc.: See—
Petrea, James C. 3,396,808.
Wright, Neal A. Air dryer. 3,396,515, 8-13-68, Cl. 55—269.
Wright, William V.: See—
Ottaway, Gerald H., Painke, Scheler, Will and Wright. 3,397,391.
Wynstra, John, and J. J. Gardikes, to Union Carbide Corp. Carboxy terminated polyesters prepared from tribasic acid anhydrides and hydroxy terminated polyesters. 3,397,254, 8-13-68, Cl. 260—835.
Wunschmann, Horst: See—
Neumann, Roland, Wunschmann, and Ehrhardt. 3,396,463.
Wyant, Robert E.: See—
Kircher, John G., McFarling, Wyant, and Kahler. 3,397,131.
Xerox Corp.: See—
Dennis, James K., and Draugelis. 3,396,965.
Donalies, Daniel J. 3,396,700.
Yanmer Diesel Engine Co., Ltd.: See—
Tado, Hiroshi. 3,396,708.
Yawata Iron & Steel Co., Ltd.: See—
Maehara, Shigeru, and Igarashi. 3,396,958.
Tani, Shoichi 3,396,674.
Yokoyama Engineering Co., Ltd.: See—
Maehara, Shigeru, and Igarashi. 3,396,958.
Yoshida, Akinobu, T. Ishikawa, and Y. Sano, to Matsushita Electric Industrial Co., Ltd. Automatic electric egg cooker. 3,396,655, 8-13-68, Cl. 99—331.
Yoshimura, Hiroshi: See—
Kamiya, Akima, Yoshimura, and Imai. 3,396,651.
Yoshizawa, Shiro, and N. Watanabe, to Nippon Carbon Co., Ltd. Method of coating a shaped carbon article with a polycarbon fluoride. 3,397,087, 8-13-68, Cl. 117—228.
Ziegler, Philip B., and R. D. Wight, to General Motors Corp. Power operated tilt and telescope steering assembly. 3,396,600, 8-13-68, Cl. 74—493.
Zenith Radio Corp.: See—
Dias, Fleming. 3,397,363.
Zerbi, Pier C., to Fiat Societa per Azioni. Overhead conveyor. 3,396,672, 8-13-68, Cl. 104—172.
Zimmermann, Werner. Safety head for ski binding. 3,396,987, 8-13-68, Cl. 280—11.35.
Ziolko, Francis J., to Johnson & Johnson. Apparatus for producing sausages. 3,396,426, 8-13-68, Cl. 17—35.

CLASSIFICATION OF PATENTS

ISSUED AUGUST 13, 1968

NOTE.—First number, class; second number, subclass; third number, patent number

2– 2.1	3,396,406
98	3,396,407
183	3,396,408
3– 1	3,396,409
4– 40	3,396,410
164	3,396,411
173	3,396,412
185	3,396,413
5– 81	3,396,414
8–100	3,397,032
111	3,397,033
149.3	3,396,415
12–146	3,396,416
13– 10	3,397,276
13	3,397,277
15– 29	3,396,417
31	3,396,418
104.93	3,396,419
210	3,396,420
236	3,396,421
308	3,396,422
312	3,396,423
16– 62	3,396,424
128	3,396,425
17– 35	3,396,426
18– 5	3,396,427
	3,396,428
12	3,396,429
19	3,396,430
30	3,396,431
19– 98	3,396,432
156.3	3,396,433
23– 2	3,397,034
106	3,397,035
	3,397,036
117	3,397,037
204	3,397,038
	3,397,039
230	3,397,040
294	3,397,041
301	3,397,042
315	3,397,043
24– 73	3,396,434
78	3,396,435
208	3,396,436
230	3,396,437
243	3,396,438
274	3,396,439
279	3,396,440
25– 36	3,396,441
28– 1	3,396,442
	3,396,443
28	3,396,444
72	3,396,445
76	3,396,446
29–156.5	3,396,447
157.1	3,396,448
173	3,396,449
178	3,396,450
183	3,397,044
191	3,397,045
195	3,397,046
200	3,396,451
413	3,396,452
421	3,396,453
494	3,396,454
498	3,396,455
580	3,396,456
592	3,396,457
615	3,396,458
625	3,396,459
629	3,396,460
630	3,396,461
30– 41.5	3,396,462
43.92	3,396,463
63	3,396,464
90	3,396,465
	3,396,466
95	3,396,467
32– 33	3,396,468
33– 23	3,396,469
126.5	3,396,470
127	3,396,471
199	3,396,472
34– 1	3,396,473
	3,396,474
5	3,396,475
25	3,396,476
85	3,396,477
35– 35	3,396,478
36– 2.5	3,396,479
	3,396,480
37–108	3,396,481
40– 2.2	3,396,482
125	3,396,483
43– 42.13	3,396,484
44.8	3,396,485
90	3,396,486
46–244	3,396,487
47– 33	3,396,488
49–276	3,396,489
382	3,396,490
413	3,396,491
51– 8	3,396,492
53	3,396,493
319	3,396,494
320	3,396,495
52– 75	3,396,496
80	3,396,497
123	3,396,498
127	3,396,499
169	3,396,500
173	3,396,501
236	3,396,502
397	3,396,503
575	3,396,504
53– 61	3,396,505
75	Re. 26,440
112	3,396,506
142	3,396,507
186	3,396,508
258	3,396,509
55– 16	3,396,510
83	3,396,511
170	3,396,512
201	3,396,513
227	3,396,514
269	3,396,515
302	3,396,516
368	3,396,517
56– 25.4	3,396,518
	3,396,519
27.5	3,396,520
330	3,396,521
57– 15	3,396,522
34	3,396,523
	3,396,524
59	3,396,525
66	3,396,526
125	3,396,527
139	3,396,528
140	3,396,529
156	3,396,530
58– 28	3,396,531
60– 13	3,396,532
	3,396,533
	3,396,534
30	3,396,535
53	3,396,536
216	3,396,537
263	3,396,538
61– .5	3,396,539
8	3,396,540
11	3,396,541
38	3,396,542
45	3,396,543
46	3,396,544
47	3,396,545
53.66	3,396,546
62– 6	3,396,547
55.5	3,396,548
101	3,396,549
117	3,396,550
185	3,396,551
233	3,396,552
64– 6	3,396,553
7	3,396,554
14	3,396,555
	3,396,556
30	3,396,557
65–260	3,397,047
66–132	3,396,558
134	3,396,559
70–134	3,396,560
71– 66	3,397,048
84	3,397,049
92	3,397,050
97	3,397,051
	3,397,052
98	3,397,053
71–105	3,397,054
115	3,397,055
72– 63	3,396,561
71	3,396,562
118	3,396,563
201	3,396,564
216	3,396,565
239	3,396,566
318	3,396,567
335	3,396,568
369	3,396,569
399	3,396,570
410	3,396,571
452	3,396,572
73– 1	3,396,573
17	3,396,574
40.5	3,396,575
89	3,396,576
141	3,396,577
150	3,396,578
194	3,396,579
343	3,396,580
351	3,396,581
376	3,396,582
407	3,396,583
432	3,396,584
74– 3.52	3,396,585
5	3,396,586
.5	3,396,587
190	3,396,588
202	3,396,589
220	3,396,590
230.17	3,396,591
325	3,396,592
371	3,396,593
409	3,396,594
425	3,396,595
432	3,396,596
469	3,396,597
479	3,396,598
492	3,396,599
493	3,396,600
501	3,396,601
503	3,396,602
506	3,396,603
548	3,396,604
650	3,396,605
677	3,396,606
687	3,396,607
688	3,396,608
711	3,396,609
740	3,396,610
820	3,396,611
837	3,396,612
75– 56	Re. 26,441
68	3,397,056
213	3,397,057
77– 55	3,396,613
81–136	3,396,614
83– 4	3,396,615
16	3,396,616
310	3,396,617
470	3,396,618
639	3,396,619
686	3,396,620
84–293	3,396,621
318	3,396,622
85– 65	3,396,623
66	3,396,624
87– 22	3,396,625
88– 1	3,396,626
14	3,396,627
89– 1.814	3,396,628
.815	3,396,629
41	3,396,630
91– 3	3,396,631
60	3,396,632
202	3,396,633
224	3,396,634
396	3,396,635
399	3,396,636
92–240	3,396,637
93– 20	3,396,638
94– 1.5	3,396,639
18	3,396,640
22	3,396,641
39	3,396,642
	3,396,643
40	3,396,644
95– 1.7	3,396,645
95– 13	3,396,646
	3,396,647
	3,396,648
86	3,396,649
89	3,396,650
96– 49	3,397,058
87	3,397,059
104	3,397,060
98– 33	3,396,651
43	3,396,652
99– 26	3,397,061
28	3,397,062
78	3,397,063
90	3,397,064
	3,397,065
93	3,397,066
	3,397,067
174	3,397,068
176	3,397,069
282	3,396,653
314	3,396,654
331	3,396,655
407	3,396,656
101– 66	3,396,657
102– 38	3,396,658
70	3,396,659
92	3,396,660
103	3,396,661
103– 1	3,396,662
42	3,396,663
84	3,396,664
87	Re. 26,438
	3,396,665
120	3,396,666
126	3,396,667
131	3,396,668
149	3,396,669
162	3,396,670
104– 13	3,396,671
172	3,396,672
105– 4	3,396,673
157	3,396,674
280	3,396,675
106– 58	3,397,070
154	3,397,071
107– 14	3,396,676
	3,396,677
108– 51	3,396,678
144	3,396,679
110– 8	3,396,680
	3,396,681
18	3,396,682
	3,396,683
99	3,396,684
111– 7	3,396,685
112– 2	3,396,686
79	3,396,687
228	3,396,688
114– 98	3,396,689
115– .5	3,396,691
1	3,396,690
35	3,396,692
41	3,396,693
116–114	3,396,694
173	3,396,695
117– 7	3,397,072
27	3,397,073
38	3,397,074
46	3,397,075
70	3,397,076
114	3,397,078
122	3,397,079
129	3,397,080
139.5	3,397,081
158	3,397,082
201	3,397,083
217	3,397,084
	3,397,085
218	3,397,086
228	3,397,087
118– 49	3,396,696
76	3,396,697
318	3,396,698
634	3,396,699
637	3,396,700
119– 15	3,396,701
17	3,396,702
30	3,396,703
31	3,396,704
122–240	3,396,705
122–379	3,396,706
510	3,396,707
123– 8	3,396,708
45	3,396,709
139	3,396,710
193	3,396,711
198	3,396,712
125– 14	3,396,713
15	3,396,714
126– 25	3,396,715
41	3,396,716
200	3,396,717
278	3,396,718
128– 2.07	3,396,719
40	3,396,720
41	3,396,721
66	3,396,722
145.6	3,396,723
	3,396,724
.8	3,396,725
218	3,396,726
349	3,396,727
427	3,396,728
489	3,396,729
548	3,396,730
129– 16	3,396,731
.1	3,396,732
131– 10.5	3,396,733
133	3,396,734
143	3,396,735
132– 7	3,396,736
133– 3	3,396,737
136– 6	3,397,088
170	3,397,089
137– 13	3,396,738
39	3,396,739
87	3,396,740
115	3,396,741
219	3,396,742
223	3,396,743
246.23	3,396,744
317	3,396,745
329.05	3,396,746
355.21	3,396,747
587	3,396,748
603	3,396,749
625.25	3,396,750
.65	3,396,751
138– 27	3,396,752
99	3,396,753
139– 54	3,396,754
116	3,396,755
232	3,396,756
370	3,396,757
140– 1	3,396,758
58	3,396,759
93.4	3,396,760
112	3,396,761
141– 7	3,396,762
68	3,396,763
144–326	3,396,764
145– 50	3,396,765
146– 52	3,396,766
71	3,396,767
222	3,396,768
231	3,396,769
241	3,396,770
148– 6.15	3,397,077
.16	3,397,092
	3,397,093
.2	3,397,090
	3,397,091
174	3,397,094
149– 39	3,397,095
	3,397,096
46	3,397,097
152–175	3,396,771
210	3,396,772
313	3,396,773
427	3,396,774
156– 48	3,397,098
96	3,397,099
97	3,397,100
229	3,397,101
257	3,397,102
307	3,397,103
351	3,397,104
494	3,397,105
161– 55	3,397,106
173	3,397,107
161–189	3,397,108
162– 37	3,397,109
42	3,397,110
279	3,397,111
318	3,397,112
164– 26	3,396,775
54	3,396,776
97	3,396,777
275	3,396,778
165– 42	3,396,779
47	3,396,780
103	3,396,781
110	3,396,782
165	3,396,783
172	3,396,784
175	3,396,785
166– .5	3,396,789
4	3,396,786
	3,396,787
	3,396,788
9	3,396,790
11	3,396,791
40	3,396,792
53	3,396,793
55.6	3,396,794
.7	3,396,795
100	3,396,796
105	3,396,797
147	3,396,798
243	3,396,799
170–135.28	3,396,800
170	3,396,801
172– 1	3,396,802
7	3,396,803
40	3,396,804
173– 49	3,396,805
174– 52	3,397,278
135	3,397,279
153	3,397,280
175– 11	3,396,806
293	3,396,807
176– 37	3,397,113
54	3,397,114
177–165	3,396,808
178– 5.4	3,397,281
6	3,397,282
.6	3,397,283
69.5	3,397,284
179– 1	3,397,285
	3,397,286
2	3,397,287
42	3,397,288
100.2	3,397,289
	3,397,290
180– 19	3,396,809
69.1	3,396,810
98	3,396,811
181– 48	3,396,812
61	3,396,813
182– 2	3,396,814
17	3,396,815
49	3,396,816
187	3,396,817
	3,396,818
184– 6	3,396,819
186– 1	3,396,820
187– 52	3,396,821
98	3,396,822
188– 56	3,396,823
73	3,396,824
90	3,396,825
191– 49	3,397,291
192– .02	3,396,826
197– 98	3,396,827
151	3,396,828
171	3,396,829
198– 33	3,396,830
199– 91	3,396,831
200– 6	3,397,292
50	3,397,293
61.3	3,397,294
202–169	3,397,115
177	3,397,116
234	3,397,117
203– 6	3,397,118
11	3,397,119
28	3,397,120
35	3,397,121
38	3,397,122
49	3,397,123

203– 52	3,397,124
204– 3	3,397,125
23	3,397,126
46	3,397,127
72	3,397,128
74	3,397,129
105	3,397,130
158	3,397,131
165	3,397,132
208	3,397,133
212	3,397,134
276	3,397,135
312	3,397,136
206– 8	3,396,832
46	3,396,833
	3,396,834
	3,396,835
47	3,396,836
59	3,396,837
	3,396,838
63.2	3,396,839
65	3,396,840
	3,396,841
208– 138	3,397,137
340	3,397,138
209– 73	3,396,842
104	3,396,843
211	3,396,844
210– 7	3,397,139
10	3,397,140
22	3,397,141
24	3,397,142
49	3,397,143
62	3,397,144
76	3,396,846
85	3,396,847
98	3,396,845
137	3,396,848
321	3,396,849
322	3,396,850
211– 13	3,396,851
212– 35	3,396,852
121	3,396,853
145	3,396,854
214– 1	3,396,855
	3,396,856
6	3,396,857
38	3,396,858
41	3,396,859
141	3,396,860
392	3,396,861
620	3,396,862
776	3,396,863
215– 9	3,396,864
219– 8.5	3,397,295
10.55	3,397,296
.69	3,397,297
75	3,397,298
86	3,397,299
101	3,397,300
345	3,397,301
528	3,397,302
545	3,397,303
220– 13	3,396,865
60	3,396,866
97	3,396,867
	3,396,868
221– 116	3,396,869
222– 14	3,396,870
76	3,396,871
193	3,396,872
309	3,396,873
402.1	3,396,874
456	3,396,875
474	3,396,876
566	3,396,877
223– 37	3,396,878
43	3,396,879
223– 46	3,396,880
67	3,396,881
111	3,396,882
118	3,396,883
224– 4	3,396,884
32	3,396,885
225– 11	3,396,886
226– 1	3,396,887
134	3,396,888
143	3,396,889
177	3,396,890
184	3,396,891
228– 1	3,396,892
2	3,396,893
56	3,396,894
229– 2.5	3,396,895
23	3,396,896
32	3,396,897
36	3,396,898
43	3,396,899
51	3,396,900
55	3,396,901
62	3,396,902
230– 58	3,396,903
114	3,396,904
122	3,396,905
127	3,396,906
232	3,396,907
235	3,396,908
271	3,396,909
233– 20	3,396,910
235– 150.24	3,397,304
	3,397,305
	3,397,306
239– 290	3,396,911
665	3,396,912
240– 41.3	3,397,307
128	3,397,308
241– 52	3,396,913
63	3,396,914
290	3,396,915
	3,396,916
242– 55	3,396,917
72	3,396,918
129.7	3,396,919
244– 1	3,396,920
43	3,396,921
123	3,396,922
	3,396,923
137	3,396,924
246– 182	3,397,309
248– 26	3,396,925
119	3,396,926
188.2	3,396,927
.6	3,396,928
211	3,396,929
216	3,396,930
280	3,396,931
349	3,396,932
431	3,396,933
249– 163	3,396,934
174	3,396,935
214	3,396,936
250– 41.3	3,397,310
.9	3,397,311
51.5	3,397,312
83	3,397,313
	3,397,314
.3	3,397,315
213	3,397,316
219	3,397,317
227	3,397,318
231	3,397,319
239	3,397,320
251– 107	3,396,937
229	3,396,938
253	3,396,939
335	3,396,940
252– 32.7	3,397,145
34	3,397,146
78	3,397,147
171	3,397,148
181	3,397,149
194	3,397,150
378	3,397,151
390	3,397,152
452	3,397,153
463	3,397,154
253– 1	3,396,941
59	3,396,942
254– 77	3,396,943
89	3,396,944
106	3,396,945
189	3,396,946
259– 72	3,396,947
260– 2	3,397,155
	3,397,156
	3,397,157
.5	3,397,158
18	3,397,159
	3,397,160
	3,397,161
23	3,397,162
28.5	3,397,163
	3,397,164
29.7	3,397,165
33.6	3,397,166
	3,397,167
37	3,397,168
	3,397,169
	3,397,170
	3,397,171
41	3,397,172
45.85	3,397,175
.9	3,397,173
	3,397,174
47	3,397,176
	3,397,177
	3,397,178
	3,397,179
63	3,397,180
67	3,397,181
	3,397,182
	3,397,183
77.5	3,397,184
78	3,397,185
.4	3,397,186
79	3,397,187
	3,397,188
	3,397,189
.3	3,397,190
80.3	3,397,191
.72	3,397,192
.81	3,397,193
85.3	3,397,194
93.7	3,397,195
	3,397,196
210	3,397,197
212	3,397,198
240	3,397,199
	3,397,200
244	3,397,201
247.2	3,397,202
248	3,397,203
	3,397,204
	3,397,205
	3,397,206
249	3,397,207
287	3,397,208
307	3,397,209
326.13	3,397,211
.5	3,397,210
345.1	3,397,212
397.3	3,397,213
429	3,397,214
	3,397,215
260– 429.5	3,397,216
440	3,397,217
442	3,397,218
448	3,397,219
.2	3,397,220
	3,397,221
459	3,397,222
464	3,397,223
475	3,397,224
486	3,397,225
	3,397,226
	3,397,227
502.3	3,397,228
515	3,397,229
559	3,397,230
	3,397,231
561	3,397,232
563	3,397,233
566	3,397,234
569	3,397,235
570.9	3,397,236
583	3,397,237
584	3,397,238
586	3,397,239
593	3,397,240
606.5	3,397,241
607	3,397,242
609	3,397,243
	3,397,244
610	3,397,245
652.5	3,397,246
653.4	3,397,247
.5	3,397,248
667	3,397,249
677	3,397,250
679	3,397,251
680	3,397,252
830	3,397,253
835	3,397,254
850	3,397,255
261– 23	3,396,948
64	3,396,949
122	3,396,950
263– 3	3,396,951
32	3,396,952
33	3,396,953
50	3,396,954
52	3,397,256
264– .5	3,397,257
9	3,397,258
86	3,397,259
	3,397,260
89	3,397,261
182	3,397,262
216	3,397,263
287	3,397,264
306	3,397,265
328	3,397,266
266– 1	3,396,955
6	3,396,956
23	3,396,957
31	3,396,958
32	3,396,959
34	3,396,960
42	3,396,961
43	3,396,962
267– 1	3,396,963
271– 5	3,396,964
64	3,396,965
86	3,396,966
272– 67	3,396,967
273– 39	3,396,968
55	3,396,969
61	3,396,970
102	3,396,971
135	3,396,972
274– 10	3,396,973
277– 9	3,396,974
26	3,396,975
71	3,396,976
94	3,396,977
153	3,396,978
	3,396,979
279– 2	3,396,980
89	3,396,981
120	3,396,982
280– 5	3,396,983
6.11	3,396,984
11.26	3,396,985
.35	3,396,986
	3,396,987
96	3,396,988
106	3,396,989
221	3,396,990
456	Re.26,439
479	3,396,991
285– 100	3,396,992
114	3,396,993
248	3,396,994
330	3,396,995
287– 189.36	3,396,996
	3,396,997
289– 17	3,396,998
292– 39	3,396,999
61	3,397,000
87	3,397,001
192	3,397,002
294– 67	Re.26,442
87.2	3,397,003
296– 23	3,397,004
24	3,397,005
26	3,397,006
27	3,397,007
28	3,397,008
100	3,397,009
297– 174	3,397,010
219	3,397,011
299– 86	3,397,012
	3,397,013
301– 39	3,397,014
302– 2	3,397,015
307– 31	3,397,321
141	3,397,322
	3,397,323
237	3,397,324
251	3,397,325
304	3,397,326
308– 3	3,397,016
4	3,397,017
88	3,397,018
193	3,397,019
207	3,397,020
236	3,397,021
310– 4	3,397,327
8.1	3,397,328
.4	3,397,329
11	3,397,330
	3,397,331
68	3,397,333
90	3,397,332
313– 108	3,397,334
111	3,397,335
146	3,397,336
250	3,397,337
330	3,397,338
315– 3.5	3,397,339
13	3,397,340
17	3,397,341
79	3,397,342
189	3,397,343
194	3,397,344
317– 3	3,397,345
104	3,397,346
123	3,397,347
317– 123	3,397,348
142	3,397,350
234	3,397,349
318– 138	3,397,351
346	3,397,352
321– 44	3,397,353
323– 22	3,397,354
43.5	3,397,355
324– 1	3,397,356
34	3,397,357
47	3,397,358
57	3,397,359
325– 45	3,397,360
330– 4.3	3,397,362
8	3,397,361
331– 8	3,397,363
65	3,397,364
102	3,397,365
113	3,397,366
116	3,397,367
332– 43	3,397,368
52	3,397,369
333– 29	3,397,370
335– 112	3,397,371
205	3,397,372
337– 112	3,397,373
338– 162	3,397,374
330	3,397,375
339– 56	3,397,376
60	3,397,377
	3,397,378
99	3,397,379
	3,397,380
176	3,397,381
230	3,397,382
252	3,397,383
258	3,397,384
340– 23	3,397,385
163	3,397,386
164	3,397,387
166	3,397,388
172.5	3,397,389
	3,397,390
	3,397,391
	3,397,392
173	3,397,393
174	3,397,394
239	3,397,395
347	3,397,396
343– 7	3,397,397
13	3,397,398
112	3,397,400
177	3,397,401
915	3,397,399
346– 37	3,397,402
72	3,397,403
74	3,397,404
108	3,397,405
350– 96	3,397,022
160	3,397,023
199	3,397,024
271	3,397,025
351– 157	3,397,026
401– 50	3,397,027
424– 89	3,397,267
180	3,397,268
205	3,397,269
220	3,397,270
244	3,397,271
248	3,397,272
263	3,397,273
316	3,397,274
329	3,397,275
431– 115	3,397,028
152	3,397,029
157	3,397,030
202	3,397,031

Classification of Designs

D 2– 11	211,925
D 9– 32	211,926
41	211,927
44	211,928
72	211,929
89	211,930
100	211,931
105	211,932
144	211,933
D 9–254	211,934
D10– 8	211,935
	211,936
	211,937
	211,938
	211,939
	211,940
D14– 3	211,941
D18– 2	211,942
D23– 7	211,943
115	211,944
146	211,945
	211,946
156	211,947
D26– 1	211,948
	211,949
13	211,950
D26– 14	211,951
15	211,952
D30– 12	211,953
D34– 5	211,954
	211,955
	211,956
D35– 3	211,957
D40– 1	211,958
D40– 1	211,959
D45– 4	211,960
D50– 6	211,961
D52– 2	211,962
D54– 14	211,963
D56– 1	211,964
4	211,965
D57– 1	211,966
D57– 1	211,967
	211,968
D61– 1	211,969
D67– 3	211,970
D71– 1	211,971
D80– 9	211,972
D83– 1	211,973
D87– 1	211,974

GEOGRAPHICAL INDEX OF RESIDENCE OF INVENTORS

(U.S. States, Territories and Armed Forces, the Commonwealth of Puerto Rico, and the Canal Zone)

(NOTE.—CODES ARE CHANGED AS OF JANUARY 1, 1967)

Alabama	1
Alaska	2
American Samoa	3
Arizona	4
Arkansas	5
California	6
Canal Zone	7
Colorado	8
Connecticut	9
Delaware	10
District of Columbia	11
Florida	12
Georgia	13
Guam	14
Hawaii	15
Idaho	16
Illinois	17
Indiana	18
Iowa	19
Kansas	20
Kentucky	21
Louisiana	22
Maine	23
Maryland	24
Massachusetts	25
Michigan	26
Minnesota	27
Mississippi	28
Missouri	29
Montana	30
Nebraska	31
Nevada	32
New Hampshire	33
New Jersey	34
New Mexico	35
New York	36
North Carolina	37
North Dakota	38
Ohio	39
Oklahoma	40
Oregon	41
Pennsylvania	42
Puerto Rico	43
Rhode Island	44
South Carolina	45
South Dakota	46
Tennessee	47
Texas	48
Utah	49
Vermont	50
Virginia	51
Virgin Islands	52
Washington	53
West Virginia	54
Wisconsin	55
Wyoming	56
U.S. Air Force	57
U.S. Army	58
U.S. Navy	59

(First number in listing denotes location according to above key. Refer to patent number in body of the Official Gazette to obtain details as to inventor name, location, etc.)

PATENTS

1	3,396,494
4	3,396,696
	3,396,966
	3,397,349
5	3,396,869
6	3,396,406
	3,396,411
	3,396,412
	3,396,417
	3,396,424
	3,396,455
	3,396,456
	3,396,459
	3,396,460
	3,396,462
	3,396,470
	3,396,476
	3,396,482
	3,396,484
	3,396,488
	3,396,502
	3,396,516
	3,396,522
	3,396,562
	3,396,565
	3,396,585
	3,396,612
	3,396,613
	3,396,641
	3,396,653
	3,396,656
	3,396,661
	3,396,678
	3,396,695
	3,396,713
	3,396,714
	3,396,715
	3,396,766
	3,396,769
	3,396,770
	3,396,790
	3,396,792
	3,396,798
	3,396,806
	3,396,807
	3,396,846
	3,396,856
	3,396,858
	3,396,886
	3,396,888
6	3,396,894
	3,396,920
	3,396,931
	3,396,939
	3,396,941
	3,396,943
	3,396,963
	3,396,989
	3,396,992
	3,396,996
	3,397,002
	3,397,004
	3,397,011
	3,397,017
	3,397,024
	3,397,034
	3,397,036
	3,397,068
	3,397,078
	3,397,088
	3,397,116
	3,397,119
	3,397,152
	3,397,157
	3,397,164
	3,397,223
	3,397,225
	3,397,226
	3,397,227
	3,397,242
	3,397,247
	3,397,283
	3,397,288
	3,397,289
	3,397,329
	3,397,339
	3,397,347
	3,397,348
	3,397,350
	3,397,365
	3,397,378
	3,397,385
	3,397,389
	3,397,390
	3,397,398
	3,397,401
	3,397,403
8	3,396,553
	3,396,665
	3,396,802
8	3,396,814
	3,396,871
	3,396,957
	3,397,040
	3,397,290
	3,397,364
9	3,396,419
	3,396,436
	3,396,485
	3,396,538
	3,396,576
	3,396,597
	3,396,645
	3,396,680
	3,396,681
	3,396,736
	3,396,744
	3,396,795
	3,396,911
	3,396,953
	3,396,970
	3,397,019
	3,397,022
	3,397,043
	3,397,045
	3,397,047
	3,397,059
	3,397,127
	3,397,146
	3,397,180
	3,397,186
	3,397,197
	3,397,206
	3,397,221
	3,397,231
	3,397,238
	3,397,314
	3,397,376
10	3,396,917
	3,397,050
	3,397,081
	3,397,097
	3,397,106
	3,397,118
	3,397,153
	3,397,171
	3,397,173
	3,397,191
	3,397,195
	3,397,233
10	3,397,234
	3,397,248
	3,397,252
11	3,396,779
	3,397,094
12	3,396,517
	3,396,743
	3,396,816
	3,396,874
	3,396,883
	3,397,026
	3,397,053
	3,397,342
13	3,396,515
	3,396,590
	3,396,625
	3,396,702
	3,396,703
	3,396,895
	3,396,995
	3,397,029
	3,397,346
	3,397,372
17	3,396,408
	3,396,457
	3,396,466
	3,396,479
	3,396,495
	3,396,534
	3,396,539
	3,396,589
	3,396,603
	3,396,604
	3,396,607
	3,396,614
	3,396,640
	3,396,670
	3,396,684
	3,396,685
	3,396,711
	3,396,712
	3,396,730
	3,396,733
	3,396,760
	3,396,763
	3,396,823
	3,396,863
	3,396,866
	3,396,885
	3,396,889
17	3,396,932
	3,396,935
	3,396,936
	3,396,940
	3,396,959
	3,396,985
	3,397,048
	3,397,069
	3,397,082
	3,397,113
	3,397,145
	3,397,147
	3,397,151
	3,397,178
	3,397,215
	3,397,264
	3,397,284
	3,397,285
	3,397,303
	3,397,320
	3,397,328
	3,397,345
	3,397,363
	3,397,367
	3,397,386
18	3,396,468
	3,396,481
	3,396,493
	3,396,552
	3,396,564
	3,396,606
	3,396,610
	3,396,652
	3,396,812
	3,396,817
	3,396,845
	3,396,862
	3,396,905
	3,396,928
	3,396,929
	3,396,946
	3,396,988
	3,397,018
	3,397,077
	3,397,099
	3,397,123
	3,397,169
	3,397,201
	3,397,273
	3,397,286
18	3,397,291
	3,397,319
	3,397,323
	3,397,354
	3,397,383
19	Re.26,439
	3,396,793
	3,396,986
	3,396,991
20	3,396,536
	3,396,635
21	3,396,717
	3,397,159
	3,397,160
	3,397,263
	3,397,387
22	3,396,999
	3,397,148
	3,397,174
	3,397,259
24	3,396,410
	3,396,421
	3,396,458
	3,396,501
	3,396,537
	3,396,557
	3,396,584
	3,396,593
	3,396,619
	3,396,689
	3,396,726
	3,396,731
	3,396,933
	3,397,130
	3,397,140
	3,397,168
	3,397,326
	3,397,362
	3,397,392
25	3,396,416
	3,396,420
	3,396,425
	3,396,472
	3,396,507
	3,396,571
	3,396,577
	3,396,646
	3,396,647
	3,396,648
	3,396,649

25 : 3,396,650 3,396,664 3,396,686 3,396,698 3,396,701 3,396,740 3,396,752 3,396,755 3,396,950 3,397,023 3,397,073 3,397,115 3,397,165 3,397,271 3,397,278 3,397,310 3,397,331 3,397,333 3,397,336 3,397,337 3,397,369

26 : 3,396,429 3,396,473 3,396,486 3,396,500 3,396,521 3,396,554 3,396,556 3,396,570 3,396,600 3,396,601 3,396,609 3,396,616 3,396,671 3,396,682 3,396,694 3,396,699 3,396,765 3,396,772 3,396,777 3,396,780 3,396,829 3,396,844 3,396,848 3,396,851 3,396,870 3,396,901 3,396,973 3,396,981 3,396,997 3,397,005 3,397,035 3,397,056 3,397,063 3,397,071 3,397,083 3,397,090 3,397,091 3,397,092 3,397,139 3,397,179 3,397,188 3,397,266 3,397,268 3,397,294 3,397,299 3,397,322 3,397,352 3,397,357 3,397,395

27 : 3,396,422 3,396,465 3,396,477 3,396,578 3,396,626 3,396,676

27 : 3,396,704 3,396,837 3,396,849 3,396,864 3,396,924 3,397,006 3,397,061 3,397,065 3,397,066 3,397,067 3,397,189 3,397,255

28 : 3,396,519

29 : 3,396,438 3,396,581 3,396,628 3,396,675 3,396,753 3,396,809 3,396,811 3,396,842 3,396,852 3,396,937 3,396,983 3,397,203 3,397,204 3,397,214 3,397,270 3,397,275

31 : 3,396,469

34 : 3,396,413 3,396,426 3,396,431 3,396,445 3,396,475 3,396,489 3,396,508 3,396,518 3,396,535 3,396,586 3,396,587 3,396,623 3,396,639 3,396,654 3,396,658 3,396,662 3,396,669 3,396,719 3,396,722 3,396,727 3,396,728 3,396,729 3,396,738 3,396,758 3,396,815 3,396,821 3,396,830 3,396,832 3,396,881 3,396,898 3,396,919 3,396,925 3,396,961 3,396,968 3,397,030 3,397,038 3,397,072 3,397,074 3,397,110 3,397,120 3,397,121 3,397,126 3,397,134 3,397,136 3,397,149

34 : 3,397,155 3,397,166 3,397,181 3,397,187 3,397,192 3,397,193 3,397,199 3,397,200 3,397,211 3,397,213 3,397,217 3,397,218 3,397,228 3,397,229 3,397,240 3,397,254 3,397,274 3,397,280 3,397,325 3,397,366 3,397,404

35 : 3,396,787

36 : RE.26,440 3,396,407 3,396,435 3,396,439 3,396,467 3,395,478 3,396,480 3,396,490 3,396,498 3,396,510 3,396,549 3,396,583 3,396,594 3,396,620 3,396,627 3,396,644 3,396,677 3,396,700 3,396,706 3,396,732 3,396,782 3,396,810 3,396,828 3,396,836 3,396,847 3,396,855 3,396,880 3,396,892 3,396,934 3,396,948 3,396,949 3,396,965 3,396,969 3,396,990 3,397,014 3,397,031 3,397,046 3,397,055 3,397,057 3,397,060 3,397,064 3,397,076 3,397,080 3,397,086 3,397,103 3,397,108 3,397,132 3,397,135 3,397,137 3,397,163 3,397,208 3,397,220 3,397,230

36 : 3,397,236 3,397,237 3,397,269 3,397,272 3,397,281 3,397,304 3,397,305 3,397,306 3,397,315 3,397,340 3,397,344 3,397,355 3,397,356 3,397,375 3,397,388 3,397,391 3,397,393

37 : 3,396,432 3,396,444 3,396,527 3,396,749 3,396,808

38 : 3,396,427 3,397,009

39 : RE.26,442 3,396,430 3,396,451 3,396,497 3,396,514 3,396,520 3,396,541 3,396,542 3,396,543 3,396,545 3,396,569 3,396,573 3,396,580 3,396,582 3,396,592 3,396,605 3,396,615 3,396,621 3,396,622 3,396,638 3,396,663 3,396,673 3,396,679 3,396,697 3,396,739 3,396,746 3,396,761 3,396,773 3,396,813 3,396,841 3,396,868 3,396,876 3,396,893 3,396,897 3,396,899 3,396,900 3,396,918 3,396,927 3,396,951 3,396,971 3,396,975 3,396,982 3,397,007 3,397,012 3,397,013 3,397,015 3,397,020 3,397,021 3,397,039 3,397,075 3,397,085

39 : 3,397,100 3,397,104 3,397,131 3,397,260 3,397,302 3,397,308 3,397,324 3,397,327 3,397,399

40 : 3,396,512 3,396,926 3,397,138 3,397,167 3,397,244

41 : 3,396,843 3,396,854 3,396,998 3,397,111

42 : RE.26,438 3,396,442 3,396,443 3,396,453 3,396,464 3,396,487 3,396,568 3,396,602 3,396,611 3,396,687 3,396,716 3,396,767 3,396,775 3,396,778 3,396,822 3,396,826 3,396,839 3,396,877 3,396,878 3,396,882 3,396,890 3,396,914 3,396,962 3,397,010 3,397,049 3,397,051 3,397,052 3,397,054 3,397,062 3,397,070 3,397,079 3,397,124 3,397,150 3,397,154 3,397,194 3,397,202 3,397,210 3,397,239 3,397,243 3,397,245 3,397,256 3,397,258 3,397,267 3,397,279 3,397,293 3,397,301 3,397,334 3,397,353 3,397,374 3,397,377

43 : 3,397,027

44 : 3,396,461

45 : 3,396,471 3,396,718

46 : 3,396,483

47 : 3,396,433 3,396,683

47 : 3,397,041 3,397,196

48 : 3,396,418 3,396,441 3,396,448 3,396,503 3,396,544 3,396,550 3,396,572 3,396,575 3,396,709 3,396,745 3,396,747 3,396,776 3,396,786 3,396,788 3,396,789 3,396,791 3,396,794 3,396,796 3,396,797 3,396,799 3,396,804 3,396,818 3,396,827 3,396,840 3,396,857 3,396,922 3,396,923 3,397,001 3,397,003 3,397,042 3,397,156 3,397,235 3,397,397 3,397,405

49 : 3,397,335

50 : 3,396,563

51 : 3,396,631 3,396,875 3,396,902 3,396,921 3,397,037 3,397,044 3,397,117 3,397,185 3,397,318 3,397,321 3,397,384

53 : 3,396,762 3,396,764 3,396,838 3,397,161 3,397,298 3,397,311

54 : 3,396,561 3,396,771 3,397,158 3,397,216

55 : 3,396,454 3,396,533 3,396,637 3,396,642 3,396,643 3,396,742 3,396,860 3,396,872 3,396,904 3,396,906 3,396,915 3,396,916 3,396,952 3,396,955 3,397,309 3,397,382

Design Patents

6 : 211,927 211,934 211,950 211,956 211,967 211,968 211,971 211,972

8 : 211,974

9 : 211,952

12 : 211,948

17 : 211,935 211,936 211,937 211,938

17 : 211,939 211,940 211,955 211,961

18 : 211,966

20 : 211,944 211,958

24 : 211,941

25 : 211,964

26 : 211,931

29 : 211,949

34 : 211,933 211,960 211,970

36 : 211,928 211,929 211,943 211,965 211,969

39 : 211,926 211,932

39 : 211,953

40 : 211,930 211,973

42 : 211,954 211,957

47 : 211,959

48 : 211,963

U.S. DEPARTMENT OF COMMERCE

OFFICIAL GAZETTE of the UNITED STATES PATENT OFFICE

August 13, 1968 Volume 853 Number 2

TRADEMARKS

NOTICES

Official Mailing Address

The official mailing address for all communications sent to the Patent Office remains:

Commissioner of Patents
Washington, D.C. 20231

The physical location of the Office is 2021 Jefferson Davis Highway, Arlington, Va. This address should not be used on mail sent to the Patent Office.

C. A. KALK,
Director of Administration.

June 25, 1968.

Trademark Suits

Notices under 15 U.S.C. 1116; Trademark Act of July 5, 1946

Reg. No. 161,439 (RAIN KING), Chicago Flexible Shaft Company, Lawn sprinklers; **Reg. No. 401,051**, same, Lawn sprinklers, hose nozzles, hose couplings and quick coupling valves; **Reg. No. 602,276**, same, Sunbeam Corporation, Hose couplings, **filed** Apr. 27, 1964, D.C., S.D.N.Y., Doc. 64–C–1289, *Sunbeam Corporation* v. *First Manufacturing Corp.* Stipulation and order of discontinuance, Apr. 23, 1968.

Reg. No. 166,810 (CRAFTSMAN), The Chandler and Price Company, Printing presses and parts thereof; **Reg. No. 227,421**, same, Paper cutters and paper cutting machines and parts thereof, and inking mechanism for printing presses, including ink fountains, vibrators, and parts thereof, **filed** May 2, 1968, D.C., N.D. Ohio (Cleveland), Doc. C68–315, *The Chandler & Price Company* v. *Sears, Roebuck & Co.*

Reg. No. 227,421. (See Reg. No. 166,810.)

Reg. No. 270,774 (REPRESENTATION OF OVAL DESIGN), Interstate Bakeries Corporation, Bread and cake; **Reg. No. 586,855** (MISCELLANEOUS DESIGN), Interstate Bakeries Corporation, doing business as Schulze Baking Company and as Weber Baking Co., Bread, **filed** Apr. 30, 1968, D.C., N.D. Ill. (Chicago), Doc. 68c784, *Interstate Bakeries Corp.* v. *The Borden Company.*

Reg. No. 338,718 (RPM), Standard Oil Company of California, Lubricating oils and greases, diesel engine lubricating oil; **Reg. No. 436,046** (RPM AND DESIGN), same, lubricating oils and greases, **filed** Apr. 18, 1968, D.C., N.D. Calif. (San Francisco), Doc. 49101, *Standard Oil Company of California* v. *Republic Powdered Metals, Inc.*

Reg. No. 401,051. (See Reg. No. 161,439.)

Reg. No. 436,046. (See Reg. No. 338,718.)

Reg. No. 508,889 (VISKON), The Visking Corporation, Nonwoven fabrics in rolls and cut to size pieces and made of unspun synthetic fibers, cotton or mixtures thereof and unified by bonding the fibers in place, **filed** May 3, 1968, D.C. Oreg. (Portland), Doc. C–68–246, *Johnson & Johnson* v. *R. D. Bussard & Sons, Inc.*

Reg. No. 524,144 (ASHLAND PENN) Ashland Oil & Refining Company, Motor oil; **Reg. No. 524,145** (ASHLAND OLD

CONDITION OF TRADEMARK APPLICATIONS AS OF JUNE 30, 1968

Total number of applications awaiting action [excluding renewals and Sec. 12(c)]	15,157
Date of oldest new application	Feb. 9, 1967
Date of oldest amended application (filing date)	Oct. 23, 1965

C. M. WENDT, Director, Trademark Examining Operation TRADEMARK EXAMINING DIVISIONS, EXAMINERS AND TRADEMARK CLASSES UNDER EXAMINATION	Oldest Application	
	New	Amended
(I) L. J. BETTENDORF, Classes 2, 3, 4, 5, 7, 9, 10, 11, 27, 28, 30, 32, 33, 37, 38, 39, 40, 41, 42, 43, 50; Certification Marks, Classes A and B	6–27–67	11–8–65
(II) F. H. WETHERBEE, Classes 1, 6, 15, 18, 45, 46, 47, 48, 49, 51, 52; Collective Membership Mark, Class 200	9–28–67	12–1–65
(III) P. S. BALL, Classes 19, 21, 23, 26, 31, 34, 35, 36	10–2–67	10–23–65
(IV) M. E. ABRAMSON, Classes 8, 12, 13, 14, 16, 17, 20, 22, 24, 25, 29, 44; Service Marks, Classes 100, 101, 102, 103, 104, 105, 106, and 107	2–9–67	3–25–66
Renewals (All Classes)	6–4–68	
Sec. 12(c) Publications (All Classes)	5–31–68	

Applications filed during the month of June 1968—2,280

Registrations Issued	530—No. 854,395 to No. 854,924
Renewals Issued	100

The TRADEMARK SECTION of the OFFICIAL GAZETTE, issued weekly, is mailed under the direction of the Superintendent of Documents, Government Printing Office, Washington, D.C. 20402 to whom all subscriptions should be made payable and all communications addressed; subscription price $12.00 per annum, foreign mailing $4.00 additional; single copies, 25 cents each.

PRINTED COPIES OF TRADEMARK REGISTRATIONS are furnished by the Patent Office for 20 cents each. Address orders to the Commissioner of Patents, Washington, D.C. 20231.

GOLD), same; **Reg. No. 535,578** (ASHLAND FLYING OCTANES), same, Gasoline; **Reg. No. 543,584** (ASHLAND TOP-FLITS), same, Lubricating oils; **Reg. No. 558,675** (ASHLAND), same, Gasoline, kerosene, lubricating oils and greases, protective oils and greases (products used to coat metals or other materials to keep them from oxidizing or rusting and/or to help preserve them), fuel oil, floor oil (products used on the surfaces of wooden floors to keep dust down and impregnate the fibers of the wood in order to preserve it), coal spray oil, oil for facilitating the cutting of metals and other substances, penetrating oils, brick oil (products used to lubricate the forms which are used in the manufacture of bricks, thereby keeping the brick from sticking to the form), form oil, paraffin oil (products used in the blending of motor oils as well as in transformer oils, hydraulic oils, and floor oils), castor oil (product used for lubricating purposes and general uses in the industrial arts), and oils and greases for use as pressure mediums in hydraulic pressure apparatus; **Reg. No. 574,318** (ASHLAND VITAFUEL), same, Gasoline; **Reg. No. 642,225** (ASHLAND FLYING OCTANES), same; **Reg. No. 675,457** (ASHLAND A PLUS), same; **Reg. No. 840,704** (ASHLAND), same, Preparation for prevention of rust or corrosion in machinery and various metallic surfaces; floor oil (products used on the surfaces of wooden floors to keep dust down and impregnate the fibers of the wood in order to preserve it, gasoline, kerosene, lubricating oils and greases, fuel oil, coal spray oil, oil for facilitating the cutting of metals and other substances, penetrating oils, brick oil (products used to lubricate the forms which are used in the manufacture of bricks, thereby keeping the brick from sticking to the form), form oil, paraffin oil (products used in the blending of motor oils as well as in transformer oils, and hydraulic oils), and oils and greases for use as pressure mediums in hydraulic pressure apparatus, **filed** Apr. 22, 1968, D.C., S.D. Fla. (Miami), Doc. 68–162–C–TC, *Ashland Oil & Refining Company* v. *Ashland Oil Company and Randolph M. Thomson.*

Reg. No. 524,145. (See Reg. No. 524,144.)

Reg. No. 535,578. (See Reg. No. 524,144.)

Reg. No. 543,584. (See Reg. No. 524,144.)

Reg. No. 543,934 (MISCELLANEOUS DESIGN), A. T. Cross Pencil Company, Mechanical pencils, **filed** Aug. 11, 1967, D.C., S.D.N.Y., Doc. 67–C–3073, *A. T. Cross Company* v. *Aversa & Martin, Inc.* Consent judgment, defendant is enjoined and restrained from copying, making, etc. all items indicated in order, May 2, 1968.

Reg. No. 558,675. (See Reg. No. 524,144.)

Reg. No. 574,318. (See Reg. No. 524,144.)

Reg. No. 586,855. (See Reg. No. 270,774.)

Reg. No. 602,276. (See Reg. No. 161,439.)

Reg. No. 642,225. (See Reg. No. 524,144.)

Reg. No. 675,457. (See Reg. No. 524,144.)

Reg. No. 706,976 (JOURNAL OF NEUROPSYCHIATRY), Journal of Neuropsychiatry, Inc., Professional magazine, **filed** Apr. 30, 1968, D.C., N.D. Ill. (Chicago), Doc. 68c785, *Journal of Neuropsychiatry, Inc.* v. *Abraham I. Jackman, M.D. et al.*

Reg. No. 840,704. (See Reg. No. 524,144.)

MARKS PUBLISHED FOR OPPOSITION

SECTION 1

The following marks are published in compliance with section 12(a) of the Trademark Act of 1946. Application for the registration of these marks in more than one class has been filed as provided in section 30 of said act as amended by Public Law 772, 87th Congress, approved Oct. 9, 1962, 76 Stat. 769. Opposition under section 13 may be filed within thirty days of this publication. See Rules 2.101 to 2.105.

A separate fee of twenty-five dollars for each class opposed must accompany the opposition.

[NOTE: For publication of marks presented in applications for registration in one class, see section 2.]

SN 253,917. Stanbee Company, Inc., Hasbrouck Heights, N.J. Filed Sept. 6, 1966.

Class 1—Raw or Partly Prepared Materials

For Stiffeners in Sheet Form for Shoe Counters and Box Toes (Int. Cl. 17).

Class 6—Chemicals and Chemical Compositions

For Hardening Preparations, Activators and Solvents for Application to Shoe Counters and Box Toes (Int. Cl. 1).

First use during 1961.

SN 254,210. Fixmobile, Inc., Brooklyn, N.Y. Filed Sept. 12, 1966.

FIXMOBILE

Class 23—Cutlery, Machinery, and Tools, and Parts Thereof

For New, Used and Rebuilt Industrial Vacuum Cleaners, Automatic Scrubbers and Parts (Int. Cl. 7).
First use Sept. 4, 1963.

Class 100—Miscellaneous

For Renting Vacuum Cleaners, Floor Machines, Automatic Scrubbers and Cleaning Equipment and Parts (Int. Cl. 42).
First use July 5, 1966.

Class 103—Construction and Repair

For Overhaul and Repair of Vacuum Cleaners, Floor Machines, Automatic Scrubbers and Cleaning Equipment and Parts (Int. Cl. 37).
First use Sept. 4, 1963.

SN 264,699. Vita-Pakt Citrus Products Co., Covina, Calif. Filed Feb. 14, 1967.

COLD COLD

The word "Cold" is disclaimed apart from the mark as shown.

Class 45—Soft Drinks and Carbonated Waters

For Citrus Juice Drinks Containing Water and Citrus Juices (Int. Cl. 32).

Class 46—Foods and Ingredients of Foods

For Citrus Juices (Int. Cl. 32).

First use during 1953.

SN 267,053. Mid-States Steel and Wire Company, Crawfordsville, Ind. Filed Mar. 17, 1967.

Class 13—Hardware and Plumbing and Steam-Fitting Supplies

For Round and Flat Steel Strapping, Strapping Seals (Int. Cl. 6).

Class 14—Metals and Metal Castings and Forgings

For Stitching Wire, Bookbinders' Wire (Int. Cl. 6).

First use Jan. 6, 1967.

SN 269,817. The Magnavox Company, Fort Wayne, Ind. Filed Apr. 24, 1967.

SCULPTURED CARDURA

Class 21—Electrical Apparatus, Machines, and Supplies

For FM/AM Radio, Television, and Combination Consoles, and Cabinets for Housing Same (Int. Cl. 9).

Class 36—Musical Instruments and Supplies

For Phonographs and Cabinets for Housing Same (Int. Cl. 9).

First use Dec. 31, 1966.

SN 272,536. Northern Electric Company, Chicago, Ill. Filed May 29, 1967.

Northern

Owner of Reg. No. 712,797.

Class 21—Electrical Apparatus, Machines, and Supplies

For Electric Heating Tapes, Electric Heating Pads, Electric Heating Gutter Cables and Electric Vaporizers of General Utility (Int. Cls. 9 and 10).
First use 1922.

Class 29—Brooms, Brushes, and Dusters

For Electric Tooth Brushes (Int. Cl. 21).
First use October 1965.

Class 34—Heating, Lighting, and Ventilating Apparatus

For Humidifiers (Int. Cl. 11).
First use May 1959.

Class 39—Clothing

For Electric Socks (Int. Cl. 9).
First use 1951.

Class 42—Knitted, Netted, and Textile Fabrics, and Substitutes Therefor

For Electric Bed Covers (Int. Cl. 10).
First use 1922.

Class 44—Dental, Medical, and Surgical Appliances

For Electric Vaporizers, Sterilizers, Massagers, Curling Irons, Baby Bottle Warmers, Devices for Fluid Conditioning Facial Tissue, Heating Pads, and a Portable Oral Hygiene Appliance Utilizing a Pulse Jet of Water for Massaging the Gums and Cleaning the Spaces Adjacent the Teeth (Int. Cls. 9, 10, and 11).
First use 1922.

SN 277,097. CTV Television Network Ltd., Toronto, Ontario, Canada. Filed July 31, 1967.

W5

Priority claimed under Sec. 44(d) on Canadian application filed June 30, 1967; Reg. No. 156,572, dated Apr. 26, 1968.

Class 38—Prints and Publications

For Videotape Recordings and Kinescope Recordings of Television Programs Dealing With Public Affairs, Including Informal Interviews With Noteworthy Guests and Informal Discussions of All Topics of General Interest (Int. Cl. 9).

Class 107—Education and Entertainment

For Regular Broadcasting and Transmission of Television Programs Dealing With Public Affairs, and the Production and Distribution of Videotape Recordings and Kinescope Recordings of Such Television Programs (Int. Cl. 41).

SN 282,228. Bruce A. Brown, Dana Point, Calif., assignee of Clairol Incorporated, New York, N.Y. Filed Oct. 11, 1967.

ENDLESS SUMMER

Class 51—Cosmetics and Toilet Preparations

For Cosmetic and Toilet Preparations—Namely, a Hair Tinting, Dyeing and Coloring Preparation, a Hair Lightener, a Cologne, an After-Shave Lotion and a Hair Conditioner (Int. Cl. 3).
First use Aug. 11, 1966.

Class 52—Detergents and Soaps

For Detergents and Soaps—Namely, a Hair Shampoo (Int. Cl. 3).
First use Sept. 26, 1966.

SN 289,444. W. E. Lahr Co., Minneapolis, Minn. Filed Jan. 24, 1968.

I-WAY

Class 6—Chemicals and Chemical Compositions

For Antifreeze Compositions—Namely, Antifreeze and Summer Coolant for Automotive Cooling Systems (Int. Cl. 1).
First use August 1965.

Class 15—Oils and Greases

For Gas Line Antifreeze (Int. Cl. 1).
First use August 1967.

SN 289,944. General Felt Industries, Inc., Chicago, Ill. Filed Jan. 31, 1968.

Owner of Reg. No. 819,587.

Class 42—Knitted, Netted, and Textile Fabrics, and Substitutes Therefor

For Rugs and Carpets (Int. Cl. 27).
First use on or about Oct. 1, 1965.

Class 50—Merchandise Not Otherwise Classified

For Plastic Carpet Runners (Int. Cl. 27).
First use in or about July 1967.

SECTION 2

The following marks are published in compliance with section 12(a) of the Trademark Act of 1946. Opposition under section 13 may be filed within thirty days of publication. See Rules 2.101 to 2.105.
A fee of twenty-five dollars must accompany the opposition.
[NOTE: For publication of marks presented in a combined application for registration in more than one class, see section 1.]

Class 1 — Raw or Partly Prepared Materials

SN 265,573. Vacuum Concrete (Overseas) Co. Anstalt, Vaduz, Liechtenstein. Filed Feb. 27, 1967.

PICOVEX

Priority claimed under Sec. 44(d) on Liechtenstein Reg. No. 2,208, dated Aug. 29, 1966.
For Industrial Chemical Products, Specifically Epoxy-Base Curable Synthetic Compositions for Epoxy Mortars and Concrete (Int. Cl. 1).

SN 269,561. Plantabbs Corporation, Timonium, Md. Filed Apr. 19, 1967.

STA-SET

For Chemical Composition for Holding Flowers (Int. Cl. 1).
First use Feb. 22, 1967.

SN 270,502. Occidental Petroleum Corporation, Los Angeles, Calif. Filed May 2, 1967.

OXY

For Phosphate Bearing Ores (Int. Cl. 6).
First use in or about April 1965.

SN 279,330. Raybestos-Manhattan, Inc., Manheim, Pa. Filed Aug. 29, 1967.

MB

The drawing is lined for the color brown.
For Bronze Filled Tetrafluoroethylene Polymer Material for the Manufacture of Oilless Bearings (Int. Cl. 17).
First use Aug. 6, 1964.

SN 280,400. Crown Rubber Company, Fremont, Ohio. Filed Sept. 15, 1967.

OLD SHU COMFORT

For Foam-Coated Fabric Used as Padding, Cushioning, Filler and Lining Material in Footwear (Int. Cl. 17).
First use Aug. 10, 1967.

SN 293,005. Tenneco Advanced Materials Inc., Newton Upper Falls, Mass. Filed Mar. 12, 1968.

FRONTERA

For Synthetic Polymeric Sheet Material for General Industrial Use (Int. Cl. 17).
First use on or about Feb. 1, 1968.

SN 296,745. MacAndrews & Forbes Company, Camden, N.J. Filed Apr. 29, 1968.

MAFCO

For Textured Synthetic Fibers (Int. Cl. 22).
First use Apr. 11, 1968.

SN 297,015. Vilar Products, Redwood City, Calif. Filed May 1, 1968.

STARCAST

For Synthetic Resins for Home and Industrial Use (Int. Cl. 1).
First use Dec. 29, 1967.

Class 2 — Receptacles

SN 282,701. David Jaffe, Scotch Plains, N.J. Filed Oct. 17, 1967.

RENDEZVOUS

For Receptacles—Namely, Re-Fillable Personal Capsules (Int. Cl. 20).
First use Sept. 8, 1967.

SN 283,337. Gibson Greeting Cards, Inc., Cincinnati, Ohio. Filed Oct. 25, 1967.

"GEM PACK"

The word "Pack" is disclaimed apart from the mark as a whole.
For Package for Decorative Bows (Int. Cl. 16).
First use Sept. 15, 1967.

SN 290,741. Augustus Mierson, d.b.a. Jason Products Co., San Francisco, Calif. Filed Feb. 9, 1968.

J-pak

For Dispensers for Polyethylene Garbage Bags (Int. Cl. 21).
First use Dec. 21, 1967.

SN 294,657. R-W Industries, Inc., Barberton, Ohio. Filed Apr. 1, 1968.

POLAR-PAK

For Transportation and Storage Containers Adapted for Mobile and Stationary Use (Int. Cl. 20).
First use at least as early as January 1967.

SN 295,508. Burhop Paper Company, Chicago, Ill. Filed Apr. 12, 1968.

For Corrugated Shipping Cartons (Int. Cl. 16).
First use June 12, 1967.

SN 295,653. The F. H. Lawson Company, Cincinnati, Ohio. Filed Apr. 15, 1968.

LIT'R-CHUTE

For Trash Receptacles (Int. Cl. 21).
First use Mar. 20, 1968.

SN 296,371. Wagner Folding Box Corp., Buffalo, N.Y. Filed Apr. 16, 1968.

AUTO-TRAY

For Folding Carry-Out Tray (Int. Cl. 16).
First use Apr. 13, 1960.

Class 3 — Baggage, Animal Equipments, Portfolios, and Pocketbooks

SN 288,542. Sarné Company, Inc., New York, N.Y. Filed Jan. 10, 1968.

SARNÉ

For Luggage, Tote Bags, Plastic, Leather, Straw and Beaded Pocketbooks and Handbags, and Evening Bags (Int. Cl. 18).
First use 1953.

Class 5—Adhesives

SN 283,692. Nichiban Co., Ltd., Tokyo, Japan. Filed Oct. 30, 1967.

Panfix

Owner of Reg. No. 712,340.
For Adhesive Tapes for Binding, Packaging and Masking (Int. Cl. 17).
First use June 25, 1958; in commerce Dec. 15, 1959.

SN 285,703. Minnesota Mining and Manufacturing Company, St. Paul, Minn. Filed Nov. 28, 1967.

The drawing is lined for the color gray. Owner of Reg. Nos. 536,381, 741,466, and 741,467.
For Adhesive Tape (Int. Cl. 17).
First use Sept. 8, 1965.

SN 297,251. General Mills, Inc., Minneapolis, Minn. Filed May 3, 1968.

GENBOND

For Resin Adhesive (Int. Cl. 1).
First use on or prior to Feb. 26, 1968.

SN 297,258. General Mills, Inc., Minneapolis, Minn. Filed May 3, 1968.

G-MELT

For Resin Adhesive (Int. Cl. 1).
First use on or prior to Feb. 26, 1968.

Class 6—Chemicals and Chemical Compositions

SN 270,507. Occidental Petroleum Corporation, Los Angeles, Calif. Filed May 2, 1967.

OXY

For Ammonium Sulphate (Int. Cl. 1).
First use in or about April 1965.

SN 271,516. Res-Q Automotive Products, Inc., Orlando, Fla. Filed May 15, 1967.

RES-Q

For Metallic-Seal Stop-Leak for Radiators and Cracked Motor Blocks and Rust Inhibitors for Radiators and Cooling Systems (Int. Cls. 2 and 17).
First use July 9, 1965.

SN 274,592. Direct Image Corporation, Monterey Park, Calif. Filed June 23, 1967.

PHOUNTENAL

For Auxiliary Printing Liquid for Use in Production Printing—Namely, for Use in Etching and as a Foundation Solution (Int. Cl. 1).
First use on or about April 1964.

SN 277,749. Stauffer Chemical Company, New York, N.Y. Filed Aug. 7, 1967.

AERO SAFE

For Fire Resistant Aircraft Hydraulic Fluid (Int. Cl. 1).
First use at least as early as May 15, 1967.

SN 279,713. Calgon Corporation (Delaware corporation), Pittsburgh, Pa., assignee of Calgon Corporation (Pennsylvania corporation), Pittsburgh, Pa. Filed Sept. 6, 1967.

SILOCK

For Phosphate-Silicate-Polymer Boiler Compound (Int. Cl. 1).
First use Nov. 25, 1966.

SN 280,440. Madison Chemical Corporation, Maywood, Ill. Filed Sept. 15, 1967.

PERFORM

For Rust and Corrosion Penetrant for Industrial Use (Int. Cl. 1).
First use Sept. 4, 1963.

SN 281,500. Ralph W. Speer, d.b.a. Elite Products Co., Memphis, Tenn. Filed Sept. 29, 1967.

HOSE MAGIC

The word "Hose" is disclaimed apart from the mark as shown.
For Preparation for Preventing Hosiery Runs (Int. Cl. 1).
First use Aug. 29, 1967.

SN 284,520. United Aircraft Corporation, Sunnyvale, Calif. Filed Nov. 9, 1967.

HYCAT

For Combustion Catalysts for Solid Propellant Formulations (Int. Cl. 1).
First use Aug. 9, 1967.

SN 286,882. International Minerals & Chemical Corporation, Skokie, Ill. Filed Dec. 14, 1967.

IMC

Owner of Reg. Nos. 724,355, 820,571, and others.
For Chemicals Used in Well Drilling, Well Packing, Well Treating, Well Workover, and Chemicals Used in Petroleum Production, Such Chemicals Being in the Nature of Thinners, Conditioners, Waterloss Control Agents, Clay Extenders, Shale Control Agents, Surfactants, Detergents, Emulsifiers, Defoamers, Lubricants, Flocculants, Emulsion Breakers, Wax Deposition Control Agents, Corrosion Inhibitors, Bactericides, and the Like (Int. Cl. 1).
First use February 1962.

SN 287,539. Geigy Chemical Corporation, Ardsley, N.Y. Filed Dec. 26, 1967.

BUG HAWK

Applicant disclaims the word "Bug" apart from the mark as shown. Owner of Reg. No. 811,194.
For Chemical Ingredient Used in the Manufacture of Insecticides (Int. Cl. 1).
First use Dec. 12, 1967.

Class 8—Smokers' Articles, Not Including Tobacco Products

SN 281,719. Plastics, Inc. St. Paul, Minn. Filed Oct. 3, 1967.

STASH TRAY

Exclusive use of the word "Tray" is disclaimed apart from the mark.
For Disposable Stackable Ash Trays (Int. Cl. 34).
First use June 1, 1967.

SN 292,753. Arlington Briar Pipe Corp., Brooklyn, N.Y. Filed Mar. 8, 1968.

PIPE BY Lee ★★★

No registration rights are claimed for the word "Pipe" apart from the mark shown in the drawing; but applicant waives none of its common law rights on the mark shown in the drawing or any feature thereof.
For Pipes (Int. Cl. 34).
First use Feb. 8, 1968.

Class 10—Fertilizers

SN 280,764. Chase Organics (Great Britain) Limited, Shepperton, Middlesex, England. Filed Sept. 20, 1967.

SM3

For Soil Builder, Soil Amendments and Soil Conditioners in the Nature of Soil Catalyst and Plant Nutrients (Int Cl. 1).
First use 1960; in commerce in or about May 1962.

SN 283,907. Lowe's, Inc., Cassopolis, Mich. Filed Nov. 1, 1967.

DECO-MULCH

For Decorative Surface Mulch Used Around Shrubbery and Bushes and in Rose Beds, Planters and Pots (Int. Cl. 31).
First use July 5, 1967.

Class 12—Construction Materials

SN 266,949. U.S. Plywood-Champion Papers Inc., New York, N.Y. Filed Mar. 16, 1967.

STOR-MOR

Owner of Reg. Nos. 657,340, 756,259, and 764,914.
For Wood, Lumber, Plywood, and Wood Fiber Products, i.e., Hardboard for Use in the Construction, Building and Furniture Fields (Int. Cl. 19).
First use on or about Feb. 3, 1967.

SN 271,389. Schnee-Morehead Chemicals, Inc., Irving, Tex. Filed May 12, 1967.

ACRYL-R

For Bedding Compounds and Seam Sealing Compounds (Int. Cl. 17).
First use on or about Mar. 5, 1967.

SN 275,154. Medusa Portland Cement Company, Cleveland Heights, Ohio. Filed June 30, 1967.

The drawing is lined for blue but color is not claimed as a feature of the mark. Owner of Reg. Nos. 44,957, 762,166, and others.
For Shrinkage Compensating Cement (Int. Cl. 19).
First use Oct. 10, 1966.

SN 278,150. Niedermeyer-Martin Company, Portland, Oreg. Filed Aug. 14, 1967.

PYRO-NON X

For Lumber That Has Been Treated With a Fire-Retardant Preparation (Int. Cl. 19).
First use Jan. 1, 1965.

SN 278,158. Niedermeyer-Martin Company, Portland, Oreg. Filed Aug. 14, 1967.

FYR-BAN

For Lumber That Has Been Treated With a Fire-Retardant Preparation (Int. Cl. 19).
First use Jan. 1, 1966.

SN 281,504. Unarco Industries, Inc., Chicago, Ill. Filed Sept. 29, 1967.

UNARCOBOARD

Owner of Reg. Nos. 755,322 and 755,491.
For Asbestos Insulating Panels (Int. Cl. 17).
First use July 10, 1961.

SN 283,659. Hendon Construction Company, Little Ferry, N.J. Filed Oct. 30, 1967.

THE NUMBERONE

For Prefabricated Swimming Pools (Int. Cl. 19).
First use Aug. 30, 1967.

SN 283,663. Hendon Construction Company, Little Ferry, N.J. Filed Oct. 30, 1967.

SPACE DECK

For Prefabricated Swimming Pools (Int. Cl. 19).
First use Aug. 31, 1967.

SN 286,773. Permagile Corporation of America, Plainview, N.Y. Filed Dec. 12, 1967.

PERMAGROUT

For Epoxy Filling, Grouting, Doweling and Bonding Compounds (Int. Cl. 19).
First use Sept. 7, 1967.

SN 293,152. The Larutan Corporation, Dallas, Tex. Filed Mar. 13, 1968.

PACZYME

For Soil Compaction Formulations To Be Added to Water and Spread Onto Soil To Be Compacted and Used In Connection With Construction of Building Pads, Bases for Roads, Driveways, Racetracks, Airport Runways, Reservoirs, and the Like (Int. Cl. 1).
First use May 1, 1963.

SN 294,041. Glaros Products, Inc., Pittsburgh, Pa. Filed Mar. 25, 1968.

INTER·LAP

Owner of Reg. No. 827,095.
For Prefabricated Building Panels of Metal and Plastic Including Steel, Aluminum, Fiberglass and Like Materials (Int. Cl. 6).
First use January 1967.

SN 294,937. J & A Products, Inc., Saginaw, Mich. Filed Apr. 4, 1968.

BLUE STAR

For Window Frames, Window Units, and Parts Thereof (Int. Cl. 19).
First use May 6, 1961.

SN 296,918. General Refractories Company, Philadelphia, Pa. Filed Apr. 30, 1968.

KYNAC

For High Alumina Refractory Brick (Int. Cl. 19).
First use Feb. 19, 1968.

Class 13—Hardware and Plumbing and Steam-Fitting Supplies

SN 264,340. Poly Products Inc., St. Paul, Minn. Filed Feb. 9, 1967.

SAFE T FLOOR

For Shower Receptors or Shower Floors (Int. Cl. 11).
First use June 3, 1966.

SN 271,808. David Kamenstein Inc., New York, N.Y. Filed May 18, 1967.

MINI-FONDUE

For Fondue Heater (Int. Cl. 11).
First use Mar. 30, 1967.

SN 278,516. Michigan Bolt & Nut Co., Inc., Madison Heights, Mich. Filed Aug. 17, 1967.

DURAPLATE

For Zinc-Coated or Finished Industrial Fasteners, Particularly Bolts, Nuts, Washers, Screws and Cotter-Pins (Int. Cl. 6).
First use April 1966.

SN 278,620. Tubex Corporation, Chicago, Ill. Filed Aug. 18, 1967.

For Metal Tubing (Int. Cl. 6).
First use July 10, 1967.

SN 280,405. The Fanner Manufacturing Company, Division of Textron, Inc., Providence, R.I. Filed Aug. 15, 1967.

SERVA-TAIL

For Preformed Helical Rods for Receiving the End of a Looped Strand Dead End In Place (Int. Cl. 6).
First use Jan. 4, 1967.

SN 281,118. Republic Industrial Corporation, New York, N.Y. Filed Sept. 25, 1967.

E-LOK

For Fasteners (Locking Screws) (Int. Cl. 6).
First use Aug. 24, 1967.

SN 283,081. American Cyanamid Company, Wayne, N.J. Filed Oct. 23, 1967.

SERVASET

Owner of Reg. No. 788,648.
For Sink and Laundry Tray Enclosed In a Cabinet (Int. Cl. 19).
First use May 1967.

SN 290,221. Empire Slip-On Hook Co., Inc., Dorado, Puerto Rico. Filed Feb. 5, 1968.

SLIP-ON

Owner of Reg. No. 658,202.
For Drapery Hardware (Int. Cl. 6).
First use on or about May 27, 1949.

SN 293,077. Deniston Company, Chicago, Ill. Filed Mar. 13, 1968.

DENISTON

Owner of Reg. No. 645,006.
For Nails, Drive Screws, Bolts, and Metal Fasteners Having Lead Portions Adjacent to the Heads Thereof (Int. Cl. 6).
First use June 20, 1955.

SN 294,351. Gardco Industries, Inc., Geneva, N.Y. Filed Mar. 28, 1968.

NOMAR

For Molded Plastic Curtain Rod Brackets, Wall Hooks, Window Shade Brackets and Button Hooks (Int. Cl. 20).
First use Jan. 30, 1968.

SN 295,170. Premium Corporation of America, Inc., Minneapolis, Minn. Filed Apr. 8, 1968.

LADY MARIAN

For Sauce Pans (Int. Cl. 21).
First use Oct. 9, 1967.

Class 14—Metals and Metal Castings and Forgings

SN 290,919. Western Gold and Platinum Company, Belmont, Calif. Filed Feb. 12, 1968.

PALCUSIL

For Brazing Alloys (Int. Cl. 6).
First use about January 1965.

SN 290,920. Western Gold and Platinum Company, Belmont, Calif. Filed Feb. 12, 1968.

INCUNIRO

Owner of Reg. No. 677,228.
For Brazing Alloys (Int. Cl. 6).
First use about Jan. 15, 1967.

SN 290,921. Western Gold and Platinum Company, Belmont, Calif. Filed Feb. 12, 1968.

NICUSIL

Owner of Reg. Nos. 658,971 and 677,229.
For Brazing Alloys (Int. Cl. 6).
First use about January 1963.

SN 290,922. Western Gold and Platinum Company, Belmont, Calif. Filed Feb. 12, 1968.

PALNIRO

For Brazing Alloys (Int. Cl. 6).
First use about January 1965.

Class 15—Oils and Greases

SN 274,055. Ellis Chemicals & Lubricants, Inc., Kansas City, Mo. Filed June 16, 1967.

MOL-E-GARD

For Lubricating Oils, Hydraulic Oils, Metal Working Fluids, Lubricating Greases, Mechanical Parts, Anti-Seize Compounds and Lubricant Powders (Int. Cl. 4).
First use Nov. 11, 1966.

Class 16—Protective and Decorative Coatings

SN 276,124. The Goodyear Tire & Rubber Company, Akron, Ohio. Filed July 17, 1967.

NEOTHANE

Owner of Reg. Nos. 689,536, 696,923, and 749,131.
For Topcoating for Heels and Soles for Boots and Shoes for Decorative and Protective Purposes (Int. Cl. 2).
First use May 2, 1967.

SN 283,462. Earl Scheib, Inc., Beverly Hills, Calif. Filed Oct. 26, 1967.

For Automotive Paint (Int. Cl. 2).
First use Mar. 15, 1967.

SN 283,833. Western Chemical Company, St. Joseph, Mo. Filed Oct. 31, 1967.

STA-PUT

For Polymer Latex Liquid for Coating and Protecting Resilient Floors Made of Vinyl, Vinyl Asbestos, Asphalt Tile, Linoleum, Ruber Tile, and Cork (Int. Cl. 2).
First use May 25, 1967.

SN 292,532. Eastern Lacquer Corp., Malden, Mass. Filed Mar. 6, 1968.

LAC-THANE

For Plastic Paints (Int. Cl. 2).
First use Oct. 2, 1967.

Class 18—Medicines and Pharmaceutical Preparations

SN 274,892. The Purdue Frederick Company, Yonkers, N.Y. Filed June 27, 1967.

BRIDINE

For Antiseptic Germicidal Preparation (Int. Cl. 5).
First use June 20, 1967.

SN 274,893. The Purdue Frederick Company, Yonkers, N.Y. Filed June 27, 1967.

GLUTANOR

Owner of Reg. No. 839,885.
For Sedative Tranquilizing Agent (Int. Cl. 5).
First use June 20, 1967.

SN 277,188. Eli Lilly and Company, Indianapolis, Ind. Filed July 31, 1967.

CORDRAFORM

Owner of Reg. No. 731,403.
For Corticosteroid Preparation With an Antifungal and Antibacterial Agent (Int. Cl. 5).
First use June 27, 1967.

SN 277,292. Ortho Pharmaceutical Corporation, Raritan, N.J. Filed Aug. 1, 1967.

TARE-PAK

Owner of Reg. No. 785,489.
For Dispensing Packages Sold Containing Medicinal Tablets (Int. Cl. 5).
First use Apr. 6, 1965.

SN 282,263. Bristol-Myers Company, New York, N.Y. Filed Oct. 11, 1967.

RESOLVE

For Cough Syrup (Int. Cl. 5).
First use Mar. 8, 1967.

SN 282,447. Eli Lilly and Company, Indianapolis, Ind. Filed Oct. 13, 1967.

GA-27

For Ingredient in a Medicated Poultry Premix To Increase Absorption Rate of Medication (Int. Cl. 5).
First use Oct. 2, 1967.

SN 282,478. The Purdue Frederick Company, Yonkers, N.Y. Filed Oct. 13, 1967.

QUIN-PLEX

Owner of Reg. Nos. 644,653 and 665,930.
For Cardiovascular Preparation (Int. Cl. 5).
First use May 10, 1967.

SN 282,818. The Purdue Frederick Company, Yonkers, N.Y. Filed Oct. 18, 1967.

QUINOPLEX

Owner of Reg. Nos. 644,653 and 665,930.
For Cardiovascular Preparation (Int. Cl. 5).
First use May 25, 1967.

SN 294,359. Parke, Davis & Company, Detroit, Mich. Filed Mar. 28, 1968.

VETRETTES

For Antibiotic Preparation—Namely, Chloramphenicol, for Use in Treatment of Calf Scours (Int. Cl. 5).
First use on or before Apr. 7, 1967.

Class 19—Vehicles

SN 249,371. White Cap Top Co., Marysville, Mich. Filed June 30, 1966.

Genuine WHITE CAP

No exclusive right is claimed to the word "Genuine."
For Folding Boat Tops, Boat Campers, Boat Side Curtains, Boat Stern Curtains, Boat Storage Covers, Boat Mooring Covers, Boat Safety Railings, and Boat Hand Rails (Int. Cls. 12 and 22).
First use Dec. 2, 1956.

SN 271,076. Shimano Kogyo Kabushiki Kaisha, Sakai, Japan. Filed May 9, 1967.

Bi Matic

Owner of Japanese Reg. No. 721,134, dated Sept. 28, 1966.
For Motorcycles, Bicycles, and Parts Therefor (Int. Cl. 12).

SN 289,138. Universal Oil Products Company, Des Plaines, Ill. Filed Jan. 18, 1968.

BANTAM-60

For Airplane Seats (Int. Cl. 12).
First use Feb. 3, 1967.

SN 289,445. W. E. Lahr Co., Minneapolis, Minn. Filed Jan. 24, 1968.

I-WAY

For Automotive Shock Absorbers (Int. Cl. 12).
First use February 1967.

SN 289,698. Koneta Rubber Company, Inc., Wapakoneta, Ohio. Filed Jan. 26, 1968.

POLY ARMOR

For Splash Guards for Vehicle Wheels (Int. Cl. 12).
First use Jan. 11, 1968.

Class 21—Electrical Apparatus, Machines, and Supplies

SN 258,114. Hill-Shaw Company, Chicago, Ill. Filed Nov. 7, 1966.

FILPAX

For Electric Cartridge-Type Coffee Maker (Int. Cl. 11).
First use September 1966.

SN 266,673. The Miller Company, Meriden, Conn. Filed Mar. 14, 1967.

MILLER

Owner of Reg. Nos. 542,866 and 547,036.
For Electrical Lighting Fixtures (Int. Cl. 11).
First use at least as early as August 1919.

SN 268,240. Sunn Musical Equipment Company, Tualatin, Oreg. Filed Apr. 3, 1967.

sunn

For Amplifier Speaker Units, Particularly for Musical Instruments, Public Address Amplifiers and Speakers, and Battery Operated Transistorized Sound Effect Devices for Electrical Guitars (Int. Cl. 9).
First use May 12, 1966; Jan. 25, 1965, as to "Sunn."

SN 270,122. The Garrett Corporation, Los Angeles, Calif. Filed Apr. 27, 1967.

GARRETT

For Electrical Connectors and Parts Thereof, Including Insulating Sleeves for Said Connectors; Electrically Motivated Linear Actuators, Linear Actuator Synchronizers, Torque Actuators and Power Amplifier Units; A.C. and D.C. Electric Motors; Electric Generators; Generator Voltage Regulators; Generator Control Panels; Self-Regulating Electro-Hydraulic Power Units; Radio Noise Filters; Capacitors; Relays; Transformers; Chokes; Battery Connectors; Limit Switch Boxes; Electromagnetic Valves; Thermistors and Mountings Therefor; Potentiometers of the Variable Electrical Resistor Type; Differential Pressure Switches; Pressure Ratio Switches; Pressure Ratio Limit Switches; Starting Control Switches; Contact Arc Suppressors; Relay Boxes; Pressure Switches; Magnetic Valves; Solenoids, Electric Positioning Transmitter Drives; Electric Synchronizing Controls for Operating a Plurality of Electric Translation Devices, Such as Motors, in Unison; Magnetic Amplifiers; Fans; Indicating Instruments; Traction Motors and Control Systems Therefor; Solid State Inverters and Converters; Printed Circuit Boards; Radio Communication Apparatus; Electrical Generating Power Plants and Auxiliary Apparatus, Including Synchronizing Panels, Bus Load Sensors, Clock Programmer Kits, Peak Load Paralleling Kits, Precise Frequency Standard Kits, Multiple Unit Programmers, Load Shed Programmers, Synchronizing Swing Panels, and Master Control Cubicles (Int. Cls. 7, 9, and 11).
First use Dec. 5, 1955.

SN 278,124. Perma-Power Company, Chicago, Ill. Filed Aug. 11, 1967.

VELVET GLIDE

For Electrical Control Apparatus for Controlling the Movement of Overhead Track Mounted Garage Doors (Int. Cl. 9).
First use May 17, 1967.

SN 280,554. Chadwick-Helmuth Co., Inc., Monrovia, Calif. Filed Sept. 18, 1967.

STROBODELIC

For Electrical Flashing Light Apparatus (Int. Cl. 11).
First use May 12, 1967.

SN 280,738. Carol Wire & Cable Corp., Pawtucket, R.I. Filed Sept. 19, 1967.

KLONDIKE

For Battery Booster Cable (Int. Cl. 9).
First use in or about August 1963.

SN 281,383. Frank W. Murphy Manufacturer, Inc., Tulsa, Okla. Filed Sept. 28, 1967.

MIKESWICH

For Pressure Operated Switches Used in Coolant Level Monitors (Int. Cl. 9).
First use Sept. 19, 1966.

SN 282,212. Sarex Corporation, Carteret, N.J. Filed Oct. 10, 1967.

ALUM-A-PAK

For Housing Enclosure for Instruments, Such as Electronic Instruments, Electronic Components, Electrical Devices, Meters, Transistorized Amplifiers, Power Supplies, Miniature Speakers, Relays, Microphone Mixers, Printed Circuit Board Assemblies, and the Like, Which Are Sold Fully Assembled (Int. Cl. 9).
First use Aug. 15, 1967.

SN 283,576. The Ruby Lighting Corporation, New York, N.Y. Filed Oct. 27, 1967.

THIS ANTIQUE WAS MADE IN 1967

For Electrical Lighting Fixtures (Int. Cl. 11).
First use on or about Oct. 1, 1967.

SN 284,082. Electro Connective Systems, Inc., Brockton, Mass. Filed Nov. 3, 1967.

The drawing is lined for the color blue, but no claim is made as to any particular color.
For Electrical Wire, Harnesses, Connectors, Flexible Circuits, and Cable (Int. Cl. 9).
First use Apr. 29, 1967.

SN 284,341. Angel Wing Inc., Oklahoma City, Okla. Filed Nov. 8, 1967.

ANGEL WING

For Television Antennas (Int. Cl. 9).
First use Sept. 8, 1967.

SN 289,446. W. E. Lahr Co., Minneapolis, Minn. Filed Jan. 24, 1968.

I-WAY

For Automotive Batteries (Int. Cl. 9).
First use May 1965.

SN 290,104. Northern Electric Company Limited, Montreal, Quebec, Canada. Filed Feb. 1, 1968.

CONTEMPRA

Owner of Canadian Reg. No. 153,625, dated Oct. 6, 1967.
For Telephone Sets (Int. Cl. 9).

SN 290,546. Standard Oil Company of California, San Francisco, Calif. Filed Feb. 7, 1968.

Owner of Reg. No. 837,842.
For Storage Batteries (Int. Cl. 9).
First use Oct. 20, 1966.

SN 290,843. General Electric Company, Hudson Falls, N.Y. Filed Feb. 12, 1968.

MAGVAR

For Dielectric Materials and Electric Capacitors (Int. Cls. 9 and 17).
First use during December 1967.

SN 297,833. John Oster Manufacturing Co., Milwaukee, Wis. Filed May 10, 1968.

OSTER

Owner of Reg. Nos. 515,517, 834,711, and 835,917.
For Electric Lather Dispensing Machines, Electric Motors, Electric Food Mixers, Electric Drink Mixers, Electric Food Choppers, Electric Food Liquefiers, Electric Food Blenders, Electric Vacuum Cleaners, Electric Food Grinders, Electric Coffee Makers, and Parts Thereof (Int. Cls. 7, 9, and 11).
First use on or about Sept. 18, 1930, on electric motors.

Class 22 — Games, Toys, and Sporting Goods

SN 272,145. Torrence W. Aldred, d.b.a. T. & G. Industries, Charlotte, N.C. Filed May 23, 1967.

WOW

For Fishing Lures (Int. Cl. 28).
First use Jan. 9, 1967.

SN 284,408. Duncan Tong, d.b.a. Reliance Trading Corporation, Hong Kong. Filed Nov. 8, 1967.

PLAY-ART

For Dolls, and Plastic and Metal Toys (Mechanical, Friction, and Battery-Operated) (Int. Cl. 28).
First use Oct. 31, 1967; in commerce Oct. 31, 1967.

SN 290,398. Milton Bradley Company, East Longmeadow, Mass. Filed Feb. 6, 1968.

EARLY AMERICAN

For Jigsaw Puzzles (Int. Cl. 28).
First use Sept. 1, 1967.

SN 297,337. Mattel, Inc., Hawthorne, Calif. Filed May 6, 1968.

UNTHINKABLE DRINKABLES

For Make and Play Toys; Edible Powders for Making Pills in a Normally Considered Inedible Form and for Making Drinks Therefrom; and Devices for Making Drinks From Such Pills or From Previously Formed Edible Pills of the Inedible-Appearing Type (Int. Cl. 28).
First use Feb. 19, 1968.

Class 23 — Cutlery, Machinery, and Tools, and Parts Thereof

SN 245,994. The Superior Electric Company, Bristol, Conn. Filed May 18, 1966.

SLO-SYN

Owner of Reg. Nos. 685,066 and 777,758.
For Drilling and Milling Machines Incorporating Digital Controls—Namely, Numerical Controls and Tape Controls, Worktables for Machine Tools, and Drives Therefor, and Adjustable Speed Drives for Electric Motors (Int. Cl. 7).
First use Oct. 22, 1965.

SN 249,294. Almo Laboratories Co. Inc., Cedar Grove, N.J. Filed June 30, 1966.

For Fluid Rinse Injecting and Fluid Detergent Feed Apparatus for Automatic Dishwashing Equipment, Such Apparatus Having Means for Detecting Fluid Concentrations in the Equipment, Measuring Quantities of Fluid To Change the Concentrations to a Predetermined Level, and Passing Fluid Into the Equipment in Controlled Amounts Until the Concentrations Have Reached Such Level (Int. Cl. 9).
First use 1955.

SN 268,885. Meyer Products, Inc., Cleveland, Ohio. Filed Apr. 11, 1967.

SUPER ELECTROLIFT

Applicant disclaims the word "Super" apart from the mark as shown. Owner of Reg. No. 780,954.
For Electrically Powered Hydraulic Power Units (Int. Cl. 7).
First use Nov. 21, 1966.

SN 278,507. Lodding Engineering Corporation, Auburn, Mass. Filed Aug. 17, 1967.

LODDING GREENCOAT

Owner of Reg. No. 721,280.
For Papermaking Coating Blades (Int. Cl. 7).
First use Mar. 22, 1967.

SN 280,465. Claude B. Schneible Co., Holly, Mich. Filed Sept. 15, 1967.

MULTI-TURI

Owner of Reg. Nos. 521,469 and 564,258.
For Scrubbers, Dust and Fume Collectors, and Towers Through Which a Gaseous Medium is Passed Countercurrent to the Flow of Liquid for the Removal of Dust and Fumes (Int. Cl. 11).
First use on or before May 8, 1967.

SN 281,530. UTD Corporation, Athol, Mass. Filed Oct. 2, 1967.

BUTTERFIELD

For Taps, Drills, Reamers, Counterbores, Dies, Cutters, End Mills, Hobs, and Carbide Tools (Int. Cl. 7).
First use Dec. 15, 1938.

SN 284,491. Matsushita Electric Industrial Co., Ltd., Kadoma-shi, Osaka, Japan. Filed Nov. 9, 1967.

PANASONIC

Owner of U.S. Reg. Nos. 800,942, 808,840, and others.
For Pencil Sharpeners, Staplers, and Electric Shavers (Int. Cls. 8 and 16).
First use at least as early as July 30, 1965; in commerce at least as early as July 30, 1965; at least as early as July 15, 1964, in another form.

SN 285,223. Formsprag Company, Warren, Mich. Filed Nov. 20, 1967.

ROTO-CAM

For Clutches (Int. Cl. 7).
First use Mar. 22, 1967.

SN 285,224. Formsprag Company, Warren, Mich. Filed Nov. 20, 1967.

DISC-O-TORQUE

For Clutches (Int. Cl. 7).
First use Mar. 22, 1967.

Class 25 — Locks and Safes

SN 246,944. Ratner Safe Company Limited, Bromley-by-Bow, London, England. Filed May 31, 1966.

RATNERMATIC

Owner of British Reg. No. 715,954, dated Mar. 19, 1953.
For Anti-Explosive Devices for Use on Safes, Vaults, Locks, and the Like, To Keep the Boltworks Securely Locked in the Event the Control Locks Are Damaged or Destroyed (Int. Cl. 6).

Class 26 — Measuring and Scientific Appliances

SN 244,891. Intercontinental Systems, Inc., assignee, by mesne assignment, of Dura Corporation, Oak Park, Mich. Filed May 4, 1966.

EDIT CONTROL

For Data Processing Equipment Accessory—Namely, a Control for Revising or Updating Typewritten Material Produced From a Data Storage Source Such as Punched or Magnetic Tape (Int. Cl. 9).
First use Oct. 19, 1964.

SN 251,620. Geo-Engineering Development Company, Mount Vernon, Ill. Filed Aug. 3, 1966.

The drawing is lined for orange.
For Testing Equipment—Namely, Environmental Controls for Creating Controlled Thermal Environments in Which Temperature Characteristics of Various Equipments May Be Tested, Combinations of Flow Rate and Pressure Meters for Testing the Output Parameters of Pumps, Well Core Analysis Instruments and Multiphase Production Line Testing Equipment Comprising Various Aggregations of the Above Specified Instruments and Apparatus (Int. Cl. 9).
First use Apr. 21, 1965.

SN 259,661. Metritape Controls, Inc., Concord, Mass. Filed Nov. 29, 1966.

METRITAPE

For Electrical Level Sensors, and Electrical Level Sensing and Indicating Systems for Measuring and Indicating Levels of Fluids or Solid Particulate Materials (Int. Cl. 9).
First use on or about Aug. 15, 1965.

SN 277,637. Steven R. Donay, d.b.a. Steven Donay Company, Milwaukee, Wis. Filed Aug. 7, 1967.

TEL-A-RING VISUAL MONITOR

Applicant disclaims the words "Visual Monitor" apart from the mark as shown.
For Instruments Applied to Telephones To Indicate That a Call Has Been Placed to That Particular Telephone (Int. Cl. 9).
First use Jan. 15, 1967.

SN 278,684. General Radio Company, West Concord, Mass. Filed Aug. 21, 1967.

fastraK

For Recording Pens, Markers and Associated Cartridge, for Use With Graphic Recording Equipment and the Like (Int. Cl. 9).
First use on or about Mar. 28, 1967.

SN 280,914. John H. Rottman, d.b.a. Menuette Co., Beverly Hills, Calif. Filed Sept. 22, 1967.

MENUETTE

For Plastic Lorgnettes Sold to Restaurateurs as Table Placed Giveaway Items (Int. Cl. 9).
First use Dec. 7, 1966.

SN 284,794. B.W.I. Imports, Ltd., New York, N.Y. Filed Nov. 14, 1967.

ARAGON

For Photographic Lenses (Int. Cl. 9).
First use Aug. 18, 1967.

SN 284,958. Zylo Ware Corporation, Long Island City, N.Y. Filed Nov. 15, 1967.

INVINCIBLE

For Eyeglasses, Eyeglass Frames, Sunglasses, and Sunglass Frames (Int. Cl. 9).
First use in or before January 1966.

SN 286,934. Honeywell Inc., Minneapolis, Minn. Filed Dec. 14, 1967.

FLUIDOT

For Air or Gas Actuated Devices With Visual Colored Signalling Means for Displaying and Indicating the Status of Pneumatic or Fluidic Circuits (Int. Cl. 9).
First use April 1966.

SN 288,089. A. R. Cochran, d.b.a. Glas-Fit Co., Atlanta, Ga. Filed Jan. 4, 1968.

GLAS-FIT

For Rubber Grommets Which Fit Over the Hinge and Pin of Eye Glasses (Int. Cl. 9).
First use on or about Dec. 4, 1967.

SN 289,329. Olivetti Underwood Corporation, New York, N.Y. Filed Jan. 22, 1968.

COINFAX

For Conversion Coin Kit for Use With Certain Makes of Electrostatic Copying Machines, Which Enables Such Copiers To Be Coin Operated (Int. Cl. 9).
First use Nov. 3, 1967.

SN 294,227. Bohn Benton Inc., New York, N.Y. Filed Mar. 27, 1968.

For Sound Motion Picture Projectors and Cartridges (Int. Cl. 9).
First use June 19, 1967.

Class 28 — Jewelry and Precious-Metal Ware

SN 287,573. Oneida Ltd., Oneida, N.Y. Filed Dec. 26, 1967.

TANGIER

For Flatware Made of, or Coated With, Precious Metal (Int. Cl. 8).
First use Dec. 11, 1967.

SN 297,012. Marvella, Inc., New York, N.Y. Filed May 1, 1968.

ROPE TRICK

For Jewelry (Int. Cl. 14).
First use Apr. 5, 1968.

Class 29 — Brooms, Brushes, and Dusters

SN 272,538. Milton Arnold Zelinkoff, d.b.a. The House of Zelinkoff and The Zelinkoff Company, Wichita, Kans. Filed May 29, 1967.

MIRACLE-WIKS

The lining on the drawing is not for the purpose of indicating a color, but is an integral part of the mark.
For Dust Mops and Dust Cloths (Int. Cl. 21).
First use Feb. 3, 1967.

SN 292,248. Allpro Corporation, Maplewood, N.J. Filed Mar. 1, 1968.

ALLPRO

Owner of Reg. Nos. 725,343, 833,571, and others.
For Brushes and Rollers, and Parts Thereof, Adapted for Applying Surface Coating Material (Int. Cl. 16).
First use on or about Feb. 1, 1960.

Class 31 — Filters and Refrigerators

SN 269,007. North American Rockwell Corporation, Pittsburgh, Pa., by merger and change of name from Rockwell-Standard Corporation, Pittsburgh, Pa. Filed Apr. 13, 1967.

KLEENFLO

Owner of Reg. No. 368,700.
For Air Filters and Components Thereof (Int. Cl. 11).
First use Jan. 16, 1939.

SN 269,008. North American Rockwell Corporation, Pittsburgh, Pa., by merger and change of name from Rockwell-Standard Corporation, Pittsburgh, Pa. Filed Apr. 13, 1967.

GREASTOP

Owner of Reg. No. 373,325.
For Air Filters and Components Thereof (Int. Cl. 11).
First use May 15, 1939.

SN 280,387. Bruner Corporation, Milwaukee, Wis. Filed Sept. 15, 1967.

ALTWINATOR

For Ion Exchange Water Softening Equipment (Int. Cl. 11).
First use Feb. 10, 1967.

SN 284,492. Matsushita Electric Industrial Co., Ltd., Kadoma-shi, Osaka, Japan. Filed Nov. 9, 1967.

PANASONIC

Owner of Reg. No. 808,849 and others.
For Electric Refrigerators (Int. Cl. 11).
First use June 28, 1965; in commerce June 28, 1965; at least as early as July 15, 1964, in another form.

Class 32 — Furniture and Upholstery

SN 280,865. Formco, Inc., Cincinnati, Ohio. Filed Sept. 21, 1967.

BATHROOM PROOF

For Laminated Plastic and Wood Vanities (Int. Cl. 20).
First use Apr. 24, 1966.

SN 285,770. Stanley Manufacturing Company, Richmond, Va. Filed Nov. 28, 1967.

STANCRAFT

For Office Furniture, Storage Cabinets, Book Cases, Clothes Lockers, and Wardrobes (Int. Cl. 20).
First use Nov. 20, 1967.

SN 295,168. Premium Corporation of America, Inc., Minneapolis, Minn. Filed Apr. 8, 1968.

LADY MARIAN

For Child's Auxiliary Seat for Chairs or Automobiles and Folding High Chairs (Int. Cl. 20).
First use Oct. 9, 1967.

SN 297,505. Jarke Corporation, Chicago, Ill. Filed May 7, 1968.

HI-DRUM

For Modular Racks for Storage and Parts Thereof (Int. Cl. 20).
First use Dec. 20, 1967.

Class 33 — Glassware

SN 270,259. Mintons Limited, Stoke-on-Trent, England. Filed Apr. 28, 1967.

MINTON

Owner of U.S. Reg. Nos. 427,236, 444,177, and others.
For Glass Tableware—Namely, Tumblers, Decanters, Plates, Bowls, Dishes, Vases, and Cruets (Int. Cl. 21).
First use March 1967; in commerce March 1967.

SN 283,481. Wheaton Glass Company, Millville, N.J. Filed Oct. 26, 1967.

VACULE

For Glass Vials, Bottles and Ampules (Int. Cl. 21).
First use May 12, 1965.

SN 283,482. Wheaton Glass Company, Millville, N.J. Filed Oct. 26, 1967.

CRYULE

For Glass Vials, Bottles and Ampules (Int. Cl. 21).
First use Oct. 19, 1964.

SN 283,483. Wheaton Glass Company, Millville, N.J. Filed Oct. 26, 1967.

DRYULE

For Glass Vials, Bottles and Ampules (Int. Cl. 21).
First use May 12, 1965.

Class 34 — Heating, Lighting, and Ventilating Apparatus

SN 265,293. Eveready Burner Supply Corp., Bethpage, N.Y. Filed Feb. 23, 1967.

E VEREADY

For Oil Fired and Gas Fired Burners and Electric Heating Units, and Parts and Accessories Therefor (Int. Cl. 11).
First use Aug. 15, 1965.

SN 267,047. Keating of Chicago, Inc., Chicago, Ill. Filed Mar. 17, 1967.

TRUMP SPECIAL

Applicant disclaims the word "Special" apart from the mark as shown.
For Gas Fired Deep Fat Fryers for Commercial Use (Int. Cl. 11).
First use Dec. 31, 1958.

SN 273,738. Bristol Metal Products, Inc., Bristol, Tenn. Filed June 13, 1967.

BRIS-QUILT

Owner of Reg. No. 643,152.
For Heat Exchange Modules Incorporating Structure To Distribute a Medium for Heat Exchange and Adapted Particularly for Industrial Process Heating and Cooling Systems (Int. Cl. 11).
First use Apr. 26, 1967.

SN 280,733. Trageser Copper Works, Inc., Jamaica, N.Y. Filed Sept. 19, 1967.

HEARTH BRITE

The word "Hearth" is disclaimed apart from the mark as shown.
For Prefabricated Electric Fireplaces (Int. Cl. 11).
First use Sept. 12, 1967.

SN 283,786. Electric Boiler Corporation of America, Worcester, Mass. Filed Oct. 31, 1967.

EBCOR

For Electric Boilers and Conductivity Control Means for the Boiler Fluid, Steam Cleaners and Hot Water Heaters (Int. Cl. 11).
First use July 1, 1963.

SN 285,276. Viking Superior Corp., Brooklyn, N.Y. Filed Nov. 20, 1967.

VIKO

For Hot Water Supply Boilers (Int. Cl. 11).
First use July 18, 1966.

SN 286,984. Alpha Metals, Inc., Jersey City, N.J. Filed Dec. 15, 1967.

HI-COR

For Solder (Int. Cl. 6).
First use September 1961.

SN 289,149. The Belmas Company, Inc., Houston, Tex. Filed Jan. 19, 1968.

HEAT IRAN

For Heat Transfer Equipment—Namely, Shell and Tube Type Heat Exchangers (Int. Cl. 11).
First use Mar. 5, 1959.

Class 35 — Belting, Hose, Machinery Packing, and Nonmetallic Tires

SN 280,859. Cork Manufacturing Company Limited, South Chingford, London, England. Filed Sept. 21, 1967.

NEOLANGITE

For Bonded Synthetic Rubber and Cork Gasketing Materials (Int. Cl. 17).
First use at least as early as 1952; in commerce at least as early as 1952.

SN 282,360. A. W. Chesterton Company, Everett, Mass. Filed Oct. 12, 1967.

PACKING
Chesterton
SERVICE

The term "Packing Service" is disclaimed apart from the mark as a whole. Owner of Reg. Nos. 429,721 and 801,875.
For Mechanical Packings for Piston and Slide Valve Rods, and for Use in Stuffing Boxes, Sheet Packings, Rod Packings, Packing Rings, and Gaskets Made Wholly or in Part of Asbestos, Fibre, Rubber, Plastic, or Compounds Thereof (Int. Cl. 17).
First use at least as early as 1935.

SN 283,792. Fedtro, Inc., Rockville Centre, N.Y. Filed Oct. 31, 1967.

INFLATE-O-MATIC

For Portable Tire Inflator Device Consisting of a Hose for Transferring Air From the Spare Tire of an Automobile (Int. Cl. 12).
First use on or about Sept. 5, 1967.

SN 284,904. The General Tire & Rubber Company, Akron, Ohio. Filed Nov. 15, 1967.

JET-RADAN

Owner of Reg. No. 835,491.
For Tires (Int. Cl. 12).
First use as early as Jan. 16, 1967.

SN 286,760. The Firestone Tire & Rubber Company, Akron, Ohio. Filed Dec. 12, 1967.

REGENCY 30

Owner of Reg. No. 785,610.
For Resilient Vehicle Tires (Int. Cl. 12).
First use Oct. 11, 1967.

SN 286,814. The Firestone Tire & Rubber Company, Akron, Ohio. Filed Dec. 13, 1967.

CAVALLINO

The English Translation of the word "Cavallino" is "little horse."
For Resilient Vehicle Tires (Int. Cl. 12).
First use Sept. 26, 1967.

Class 36 — Musical Instruments and Supplies

SN 279,304. Krakauer Bros., Bronx, N.Y. Filed Aug. 29, 1967.

KRAKAUER

For Pianos (Int. Cl. 15).
First use about February 1875.

SN 279,305. Krakauer Bros., Bronx, N.Y. Filed Aug. 29, 1967.

KRAKAUER BROS

For Pianos (Int. Cl. 15).
First use about February 1875.

SN 282,087. Hickory Records, Inc., Nashville, Tenn. Filed Oct. 9, 1967.

TRX

For Mono and Stereo Phonograph Records (Int. Cl. 9).
First use July 14, 1967.

SN 282,367. Horizon Records Corporation, Houston, Tex. Filed Oct. 12, 1967.

CINEMA

For Phonograph Records (Int. Cl. 9).
First use Jan. 7, 1964.

SN 284,490. Matsushita Electric Industrial Co., Ltd., Kadoma-shi, Osaka, Japan. Filed Nov. 9, 1967.

PANASONIC

Owner of Reg. No. 808,862 and others.
For Tape Recorders and Electric Record Players (Int. Cl. 9).
First use Feb. 20, 1966; in commerce at least as early as Feb. 20, 1966; at least as early as July 15, 1964, in another form.

SN 285,066. SCM Corporation, New York, N.Y. Filed Nov. 16, 1967.

MAIL CALL

For Tape Recorders/Reproducers, and Parts Thereof (Int. Cl. 9).
First use Sept. 8, 1967.

SN 297,827. Apple Corps, Inc., New York, N.Y. Filed May 10, 1968.

apple

For Phonograph Records (Int. Cl. 9).
First use May 8, 1968.

SN 298,171. Apple Corps, Inc., New York, N.Y. Filed May 15, 1968.

a

The drawing is lined for green and yellow.
For Phonograph Records (Int. Cl. 9).
First use May 13, 1968.

Class 37 — Paper and Stationery

SN 275,918. Children's Bargain Town U.S.A., Inc., Niles, Ill. Filed July 13, 1967.

TOY-R-RIFIC

For Matching Ensembles Party Kits, Comprising Paper Napkins, Tablecovers, Plates, and Cups (Int. Cl. 16).
First use Oct. 27, 1966.

SN 284,336. La Société Anonyme: Papeteries de Saint-Louis S.A., Saint-Louis (Haut-Rhin), France. Filed Nov. 8, 1967.

ST LOUIS
PSL

Owner of French Reg. No. 3,560, dated Jan. 9, 1964 (Mulhouse); Natl. Inst. No. 220,901.
For Stationery—Namely, Letter Paper and Matching Envelopes (Int. Cl. 16).

SN 288,874. Bertram Slanhoff, d.b.a. Slanhoff Manufacturing Company, Mount Vernon, N.Y. Filed Jan. 15, 1968.

SLANTEE

For Combination Book Cover and Easel (Int. Cl. 16).
First use Dec. 1, 1967.

SN 294,996. Helzberg's Diamond Shops, Inc., Kansas City, Mo. Filed Apr. 5, 1968.

I AM LOVED

For Stationery—Namely, Writing Paper and Envelopes (Int. Cl. 16).
First use Mar. 26, 1968.

Class 38 — Prints and Publications

SN 260,612. Tyndale House Publishers, Wheaton, Ill. Filed Dec. 12, 1966.

THE LITERARY DIGEST

For Magazine (Int. Cl. 16).
First use Nov. 25, 1966.

SN 261,478. Farrar, Straus and Giroux, Inc., New York, N.Y. Filed Dec. 27, 1966.

VISION

For Children's Books on Religious Subjects (Int. Cl. 16).
First use September 1955.

SN 263,693. Pottersign, Inc., Peabody, Mass. Filed Jan. 31, 1967.

MFI
MARKINGS FOR INDUSTRY

Applicant disclaims in connection with this specific application the words "Markings for Industry"; reserving, however, all common law rights which it may now have or acquire in the future with respect to said phrase.
For Printed Paper Signs, Labels and Decals (Int. Cl. 16).
First use at least as early as Jan. 31, 1965.

SN 266,319. The C. R. Gibson Company, Norwalk, Conn. Filed Mar. 9, 1967.

STARDUST

For Books (Int. Cl. 16).
First use January 1966.

SN 266,372. T.F.H. Publications, Inc., Jersey City, N.J. Filed Mar. 9, 1967.

TFH

For Books (Int. Cl. 16).
First use September 1952.

SN 271,121. Nathaniel Branden Institute Incorporated, New York, N.Y. Filed May 10, 1967.

N I B

The cross-hatching on the drawing is part of the mark and does not represent color.
For Printed Materials in the Form of Leaflets and Pamphlets Expounding a Philosophy, and Applying This Philosophy to All Aspects of Culture (Int. Cl. 16).
First use at least as early as January 1962.

SN 272,192. Victor Lalli Enterprises, Inc., New Rochelle, N.Y. Filed May 23, 1967.

The words "Cheng Chou" and the picture are not the name, or the representation, of any particular person. For the purposes of registration, no claim is made to the exclusive right to use the words "Weekly Pick," but the applicant waives none of its common law rights therein.
For Numerology Leaflets Published Periodically (Int. Cl. 16).
First use Jan. 25, 1958.

SN 272,433. Western Publishing Company, Inc., Racine, Wis. Filed May 25, 1967.

PLAYSTORY

For Series of Books for Children (Int. Cl. 16).
First use Feb. 27, 1967.

SN 273,731. American Heritage Publishing Co., Inc. New York, N.Y. Filed June 13, 1967.

For Magazines and Books (Int. Cl. 16).
First use during May 1950.

SN 273,935. Associated Graphologists International, Inc., New York, N.Y. Filed June 15, 1967.

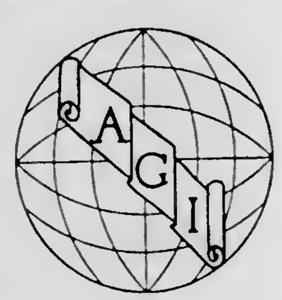

For Journal Issued Periodically (Int. Cl. 16).
First use October 1966.

SN 277,472. QD Publishing Inc., New York, N.Y. Filed Aug. 3, 1967.

AMERICAN BANKLETTER

For Newsletter (Int. Cl. 16).
First use June 26, 1967.

SN 278,289. Evangelical Foreign Missions Association, Washington, D.C. Filed Aug. 15, 1967.

mns
missionary news service

The words "Missionary News Service," are disclaimed apart from the mark as shown.
For News Bulletin Carrying Topical Material in Digest Form (Int. Cl. 16).
First use Nov. 15, 1954.

SN 278,967. Indicator Digest, Inc., Palisades Park, N.J. Filed Aug. 24, 1967.

INDICATOR DIGEST

For Financial Newsletter (Int. Cl. 16).
First use Mar. 15, 1961.

SN 279,036. American Federation of Police, Inc., Venice Fla. Filed Aug. 25, 1967.

POLICE TIMES

For Magazine and Newspaper (Int. Cl. 16).
First use Jan. 1, 1967.

SN 279,097. Rodale Press, Inc., Emmaus, Pa. Filed Aug. 25, 1967.

FITNESS FOR LIVING

For Magazine (Int. Cl. 16).
First use Aug. 14, 1967.

SN 281,389. Geo. A. Pflaum, Publisher, Inc., Dayton, Ohio. Filed Sept. 28, 1967.

TODAY'S CATHOLIC TEACHER

For Magazine Published From Time to Time (Int. Cl. 16).
First use Sept. 1, 1967.

SN 297,262. McGraw-Hill, Inc., New York, N.Y. Filed May 3, 1968.

ELECTRICAL CONSTRUCTION AND MAINTENANCE

Owner of Reg. No. 507,478.
For Technical and Management Journal for Electrical Contractors, etc., Published Monthly (Int. Cl. 16).
First use Mar. 1, 1947.

Class 39 — Clothing

SN 262,132. The Curless Corporation, Tuckahoe, N.Y. Filed Jan. 9, 1967.

dublife

The lining on the drawing is merely to show the lining on the specimens.
For Collars and Cuffs for Dress Shirts (Int. Cl. 25).
First use May 14, 1946.

SN 268,859. M. Aron Corporation, New York, N.Y. Filed Apr. 11, 1967.

DE CARLO

For Bow Ties and Four-in-Hand Neckties (Int. Cl. 25).
First use May 29, 1961.

SN 271,767. Cesare Conteglacomo S.p.A., Putignano, Bari, Italy. Filed May 18, 1967.

Priority claimed under Sec. 44(d) on Italian application filed Feb. 22, 1967; Reg. No. 206,859, dated Apr. 27, 1967. Applicant disclaims the word "Confezioni" apart from the mark as shown. Owner of U.S. Reg. No. 772,874.
For Men's and Women's Custom and Ready-Made Outer Garments—Namely, Outer Coats, Overcoats, Suits, Dresses, Coats, Trousers, Jackets, Skirts, Slacks, and Blouses (Int. Cl. 25).

SN 273,798. Ramchandra Hassamal Shamdasani, Liverpool, England. Filed June 13, 1967.

INDEUREX

Owner of British Reg. No. 874,150, dated Jan. 12, 1965.
For Ready Made Articles of Clothing—Namely, Shirts, Neckties, Socks, Handkerchiefs; Underwear, Namely, Briefs and Vests; Outerwear, Namely, Slipovers, Pullovers, Cardigans and Jumpers; Brassieres; Ladies' Lingerie, Namely, Full Slips, Half Slips, Panties, and Nightgowns (Int. Cl. 25).

SN 277,191. V. Mayes & Company (Australia) Proprietary Limited, Moorabbin, Victoria, Australia. Filed July 31, 1967.

DEB-U-FORM

Owner of Australian Reg. No. 154,045, dated May 26, 1959.
For Brassieres, Corselets, Corsets, Corset Pads, Girdles, Suspenders, Suspender Belts, and All Other Foundation Garments (Int. Cl. 25).

SN 277,463. Joyce, Inc., Cincinnati, Ohio. Filed Aug. 3, 1967.

joyce
California

Applicant disclaims the word "California" apart from the mark as shown. Owner of Reg. Nos. 392,863 and 504,118.
For Women's Shoes (Int. Cl. 25).
First use at least as early as Apr. 30, 1955.

SN 278,972. Kayser-Roth Corporation, New York, N.Y. Filed Aug. 24, 1967.

NOW!

Owner of Reg. No. 822,425.
For Men's and Ladies' Hosiery (Int. Cl. 25).
First use July 20, 1967.

SN 281,371. Marilyn Gesner, Brooklyn, N.Y. Filed Sept. 28, 1967.

PUT ON

For Women's Apparel—Namely, Dresses, Blouses, Skirts, Formal Gowns, Slacks, Shirts, Sweaters, Culottes, Hats, Bathing Suits, and Shorts (Int. Cl. 25).
First use Mar. 28, 1967.

SN 282,685. Crosley Shoe Corporation Limited, Toronto, Ontario, Canada. Filed Oct. 17, 1967.

DUBLEENS

Owner of Canadian Reg. No. 129,806, dated Feb. 8, 1963.
For Shoes, Boots, and Slippers (Int. Cl. 25).

SN 283,141. Modern Globe, Inc., Pawtucket, R.I. Filed Oct. 23, 1967.

LOLLI-LON

For Yarn Sold Only in Finished Hosiery and Underwear (Int. Cl. 25).
First use on or about Oct. 2, 1967.

SN 286,328. Eagle Clothes, Inc., New York, N.Y. Filed Dec. 6, 1967.

Owner of Reg. Nos. 66,879, 711,919, and others.
For Men's Coats, Topcoats, and Suits (Int. Cl. 25).
First use June 1883.

SN 286,948. The Manhattan Shirt Company, New York, N.Y. Filed Dec. 14, 1967.

CENTRE COURT

For Knitted Outer Shirts and Woven and Knitted Sport Shirts (Int. Cl. 25).
First use Nov. 8, 1967.

SN 287,383. Slumbertogs, Inc., New York, N.Y. Filed Dec. 21, 1967.

SAUCYS BY JULI

Owner of Reg. Nos. 599,094, 816,652, and others.
For Nightgowns (Int. Cl. 25).
First use Nov. 20, 1967.

SN 287,846. Wayne-Gossard Corporation, Humboldt, Tenn. Filed Dec. 29, 1967.

SHARMALON

For Ladies' Hosiery and Panty Stockings (Int. Cl. 25).
First use on or about Nov. 22, 1967.

SN 287,880. J. W. Bray Company, Inc., Dalton, Ga. Filed Jan. 2, 1968.

MAJESTIQUES

For Slippers (Int. Cl. 25).
First use Nov. 24, 1967.

SN 288,023. The Manhattan Shirt Company, New York, N.Y. Filed Jan. 3, 1968.

ZIP-CLEAN

For Outer Dress and Sports Shirts for Men and Women, and Pajamas for Men (Int. Cl. 25).
First use July 26, 1967.

SN 289,028. May Knitting Co., Inc., Bronx, N.Y. Filed Jan. 17, 1968.

MAISON-MAI

The mark "Maison-Mai" means "house-Mai" or "house of Mai."
For Sweaters and Swim Wear (Int. Cl. 25).
First use Nov. 13, 1967.

SN 291,017. Alpha Mills Corporation, Schuylkill Haven, Pa. Filed Feb. 14, 1968.

ALWAYS YOURS

For Ladies' Underwear (Int. Cl. 25).
First use Feb. 1, 1968.

SN 292,268. The Globe Tailoring Company, Cincinnati, Ohio. Filed Mar. 1, 1968.

MASTER MADE

Owner of Reg. No. 437,075.
For Men's, Young Men's, and Boys' Clothing, Consisting of Trousers, Pants, Vests, Coats, Jackets, and Overcoats (Int. Cl. 25).
First use on or about July 1, 1922.

SN 297,743. The United States Shoe Corporation, Cincinnati, Ohio. Filed May 9, 1968.

CABARET

For Ladies' Shoes (Int. Cl. 25).
First use at least as early as Apr. 12, 1968.

SN 297,741. The United States Shoe Corporation, Cincinnati, Ohio. Filed May 9, 1968.

SATIRE

For Ladies' Shoes (Int. Cl. 25).
First use at least as early as Apr. 12, 1968.

Class 42—Knitted, Netted, and Textile Fabrics, and Substitutes Therefor

SN 267,609. Cannon Mills Company, Kannapolis, N.C. Filed Mar. 27, 1967.

PUCKER-FREE

For Towels (Int. Cl. 24).
First use Feb. 19, 1962.

SN 273,733. Anglo Fabrics Company, Inc., New York, N.Y. Filed June 13, 1967.

ANGLO LANA

Owner of Reg. Nos. 438,953 and 636,015.
For Woolen and Worsted Piece Goods (Int. Cl. 24).
First use Nov. 15, 1945.

SN 282,539. Cannon Mills Company, Kannapolis, N.C. Filed Oct. 16, 1967.

ELEGANTÉ

For Towels and Wash Cloths (Int. Cl. 24).
First use Sept. 1, 1967.

SN 283,881. DHJ Industries Inc., New York, N.Y. Filed Nov. 1, 1967.

MELLO-STAR

Owner of Reg. No. 845,531.
For Woven and Non-Woven Fusible Interlinings and Interfacings and Which, When Laminated to Textiles and Similar Products, Are Used in the Manufacture of Garments of Wearing Apparel, Draperies, and Similar Products (Int. Cl. 24).
First use Oct. 2, 1967.

SN 284,322. Sani-Pac Corporation, New York, N.Y. Filed Nov. 7, 1967.

Applicant disclaims exclusive rights in the representation of the goods apart from the mark as shown, without disclaiming or waiving any rights at common law.
For Pillow Covers (Int. Cl. 24).
First use Aug. 2, 1961.

SN 288,883. J. P. Stevens & Co., Inc., New York, N.Y. Filed Jan. 15, 1968.

HI-FILTRONIC

Owner of Reg. No. 728,361.
For Fabrics of Glass Fibers for Industrial Purposes (Int. Cl. 24).
First use Dec. 21, 1967.

SN 289,095. Griffolyn Co., Inc., Houston, Tex. Filed Jan. 18, 1968.

GRIFF-SHRINK

For Reinforced Plastic Fabric Used as Tarpaulins and Other Uses (Int. Cl. 24).
First use at least as early as June 1, 1967.

SN 289,164. Blackstaff Limited, Belfast, Northern Ireland. Filed Jan. 19, 1968.

Blackstaff

For Piece Goods of Linen, Piece Goods of a Linen/Rayon Blend, Table Cloth Sets, Napkin Sets, Luncheon Sets, Cocktail Sets, Card Table Covers, Linen Calendars, Sheets and Pillowcases (Int. Cl. 24).
First use January 1956; in commerce January 1956.

SN 289,353. J. P. Stevens & Co., Inc., New York, N.Y. Filed Jan. 22, 1968.

EASY OUT

For Piece Goods of One or More Natural Fibers Including Wool and Cotton, or Synthetic Fibers or Cellulosic Fibers or Blends of the Foregoing, Which Have Been Treated With a Soil Release Finish (Int. Cl. 24).
First use Jan. 15, 1968.

SN 289,399. Hampton Mills, Inc., Ellijay, Ga. Filed Jan. 23, 1968.

PRINCESS LORAINE

For Rugs, Textile Bath Mat Sets, and Textile Commode Lid Covers (Int. Cls. 27 and 24).
First use at least as early as July 26, 1956.

SN 289,408. Rex Lucas, Jr., d.b.a. R & J Enterprises, Dallas, Tex. Filed Jan. 23, 1968.

PILLOW MAGIC

For Pillow Cases (Int. Cl. 24).
First use Mar. 8, 1967.

SN 289,647. Albany Felt Company, Albany, N.Y. Filed Jan. 26, 1968.

DURACOMB

For Industrial Woven Fabric Combining a Screen Base and Needled Web for Use on a Papermaking Machine (Int. Cl. 24).
First use on or about July 19, 1967.

SN 289,652. Annin & Co., New York, N.Y. Filed Jan. 26, 1968.

ANNIN

Owner of Reg. No. 514,934.
For Bunting (Int. Cl. 24).
First use Jan. 3, 1847.

SN 289,725. J. P. Stevens & Co., Inc., New York, N.Y. Filed Jan. 26, 1968.

STEVEREST

For Piece Goods of One or More Natural Fibers Including Wool and Cotton, or Synthetic Fibers or Cellulosic Fibers or Blends of the Foregoing (Int. Cl. 24).
First use Dec. 12, 1967.

SN 297,004. Deering Milliken, Inc., New York, N.Y. Filed May 1, 1968.

TRANSEASON

Owner of Reg. No. 584,869.
For Textile Fabrics Made of Wool, Cotton and Synthetic Fibers, and Combinations Thereof (Int. Cl. 24).
First use Apr. 24, 1968.

SN 297,501. David Crystal, Inc., New York, N.Y. Filed May 7, 1968.

WONDERCORD

Owner of Reg. No. 513,749.
For Fabric for Men's and Ladies' Outer Garments (Int. Cl. 24).
First use July 1947.

Class 43—Thread and Yarn

SN 277,796. Riverside Mills, Augusta, Ga. Filed Aug. 8, 1967.

riverside mills
RSM
riverspun

The drawing is lined for red and blue. Applicant disclaims the word "Mills" apart from the mark as shown.
For Carpet Yarn (Int. Cl. 23).
First use Sept. 1, 1966.

SN 279,491. Pentapco, Inc., d.b.a. Penn Products Co., Elizabeth, N.J. Filed Aug. 30, 1967.

Fashion Mode

Owner of Reg. Nos. 780,651 and 811,073.
For Sewing Thread (Int. Cl. 23).
First use Mar. 4, 1966.

Class 44—Dental, Medical, and Surgical Appliances

SN 264,235. Popper & Sons, Inc., New York, N.Y. Filed Feb. 8, 1967.

RED DOT

The word "Red" is disclaimed apart from the mark as shown.
For Fever Thermometers (Int. Cl. 9).
First use February 1957.

SN 270,657. Black Dentaprises, Inc., Miami, Fla. Filed May 4, 1967.

ultrason

For Oral Lavage Dental Sprayer (Int. Cl. 10).
First use Oct. 25, 1965.

SN 279,476. Georgia E. Glintz, Des Moines, Iowa. Filed Aug. 31, 1967.

For Hair Dryer (Int. Cl. 7).
First use July 21, 1967.

SN 284,569. American Sterilizer Company, Erie, Pa. Filed Nov. 13, 1967.

AMSCOMATIC

Owner of Reg. No. 681,562.
For Medical, Dental and Surgical Automatic Sterilizers and Washer Sterilizers (Int. Cl. 11).
First use July 1, 1967.

SN 289,559. Medical Plastics Corporation of America, Greensboro, N.C. Filed Jan. 25, 1968.

MEDI-GARD

Owner of Reg. No. 829,172.
For Plastic Tubing Used To Drain Wounds or Incisions in Any Part of a Human or Animal's Body; Plastic Tubing Used With Oxygen Therapy Equipment Such as Face Masks, Whereby the Oxygen Is Forcefully Fed to Patients, and Plastic Tubing Used in Connection With Catheters, for Drainage or Input of Fluids Into Animal or Human Bodies (Int. Cl. 10).
First use Aug. 2, 1965.

SN 290,153. C. R. Bard, Inc., Murray Hill, N.J. Filed Feb. 2, 1968.

UTIL-CATH

For Catheters (Int. Cl. 10).
First use February 1960.

SN 290,264. Electone Hearing Aid Company, Winter Park, Fla. Filed Feb. 5, 1968.

ELECTONE

For Hearing Aids (Int. Cl. 10).
First use Sept. 10, 1964.

Class 45—Soft Drinks and Carbonated Waters

SN 265,912. National Nugrape Company, Atlanta, Ga. Filed Mar. 3, 1967.

SC SunCrest

Owner of Reg. No. 376,703.
For Soft Drinks and Syrups and Concentrates for the Preparation Thereof (Int. Cl. 32).
First use Nov. 1, 1966.

SN 266,254. The Pillsbury Company, Minneapolis, Minn. Filed Mar. 8, 1967.

Crash Orange

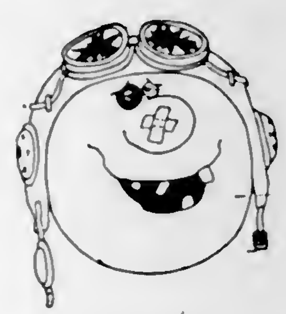

Applicant disclaims the word "Orange" apart from the mark as shown.
For Powders for Making Soft Drinks (Int. Cl. 32).
First use Feb. 27, 1967.

SN 279,461. Delaware Punch Company, San Antonio, Tex. Filed Aug. 31, 1967.

AMIGO

The Spanish word "Amigo" is translated in English as "friend."
For Soft Drinks and Flavor Concentrate for Soft Drinks (Int. Cl. 32).
First use May 15, 1967.

SN 287,081. Monsanto Overseas Enterprises Company, St. Louis, Mo. Filed Dec. 18, 1967.

PUMA

For Nonalcoholic Soft Drink and Concentrate for Use in the Preparation of Soft Drinks (Int. Cl. 32).
First use Nov. 28, 1967.

SN 296,082. S. Twitchell Co., d.b.a. Old Keg Company, Camden, N.J. Filed Apr. 22, 1968.

Old Keg

For Soft Drinks and Soft Drink Bases (Int. Cl. 32).
First use Apr. 24, 1967.

SN 296,083. S. Twitchell Co., d.b.a. Old Keg Company, Camden, N.J. Filed Apr. 22, 1968.

For Soft Drinks and Soft Drink Bases (Int. Cl. 32).
First use Apr. 24, 1967.

Class 46—Foods and Ingredients of Foods

SN 155,718. Marriott Corporation, Washington, D.C., by change of name from Hot Shoppes, Inc., Washington, D.C. Filed Oct. 22, 1962.

FAIRFIELD FARMS

Owner of Reg. No. 527,932 and others.
For Ready To Eat Food Products—Namely, Refrigerated Meat and Poultry, Preserves, Marmalade, Jelly, Pickles, and Candy (Int. Cls. 29 and 30).
First use at least as early as September 1958; May 1, 1898, as to "Fairfield."

SN 232,061. Commissary, Inc., Topeka, Kans. Filed Nov. 3, 1965.

WHERE FOOD IS KING

For Precooked Frozen Foods—Namely, Macaroni and Cheese; Macaroni and Ground Beef; Bar-B-Q Sauce and Sliced Pork; Sliced Pork and Yams; Sliced Beef and Potatoes; Salisbury Steak and Noodles; Bar-B-Q Sauce and Sliced Beef; Lasagna and Meat Sauce With Cheese; Swiss Steak and Dumplings, Turkey and Giblet Gravy With Dressing; Chicken and Dumplings; and Chicken With Rice (Int. Cls. 29 and 30).
First use October 1965.

SN 240,479. Ricci Remond Chocolate Co. Pty. Limited, New South Wales, Australia. Filed Mar. 8, 1966.

Priority claimed under Sec. 44(d) on Australian Reg. No. 197,577, dated Sept. 29, 1965. The name "Ricci Remond" is fanciful.
For Chocolate Candies (Int. Cl. 30).

SN 263,204. Scrivner-Boogaart, Inc., Oklahoma City, Okla. Filed Jan. 24, 1967.

QUAIL

Owner of Reg. No. 218,489.
For Canned and/or Glass-Jarred Foods—Namely, Fordhook Limas, Fancy Pumpkin, Cider Vinegar, Salad Dressing, French Dressing, Prepared Mustard, Hickory Smoke Barbecue Sauce, Apple Cherry Jelly, Apple Blackberry Jelly, Apple Raspberry Jelly, Apple Plum Jelly, Dill Relish, Sour Relish, Imitation Maple Waffle Syrup, Pancake Syrup, Sweet Relish, Midget Sweet Pickles, Sour Pickles, Cross Cut Sour Pickles, Sweet Cherry Peppers, Dill Pickles, Hamburger Sliced Dill Pickles, Sweet Pickles, Waffle Cut Sweet Pickles, Kosher Style Dill Pickles, Hamburger Sliced Kosher Dill Pickles, Apple Jelly, Grape Jelly, Apple Grape Jelly, Chopped Turnip Greens With Diced Turnips, Whole Irish Potatoes, Sliced Spinach, Chopped Turnip Greens, Curly Leaf Spinach, Salad Style Diced Irish Potatoes, Mustard Greens, Cut Green Beans, Cut Wax Beans, Fancy Whole Sweet Potatoes, Sliced Irish Potatoes, Chopped Mixed Greens, Chopped Mustard Greens, Dark Red Kidney Beans, Pinto Beans, Shelled Blackeye Peas, Purple Hull Peas, Blackeye Peas With Snaps, Crowder Peas, Tiny Tender Field Peas With Fresh Snaps, Chicken Soup Base, Boned Chicken, Chicken Broth, Boned Turkey, Long Thread Coconut, Flaked Coconut, Short Shread Coconut, Macaroon Coconut; and Packaged Foods—Namely, Long Spaghetti, Egg Noodles, No. 8. Spaghettini, Elbow Macaroni, Elbow Spaghetti, Shell Macaroni, Long Lasagne, Long Spaghetti, Long Macaroni, and Flour (Int. Cls. 29 and 30).
First use 1955.

SN 271,917. Candy Snacks Corporation, Methuen, Mass. Filed May 19, 1967.

Merry-Munch

For Confection Consisting of a Blend of Toffee, Peanuts, and Popcorn (Int. Cl. 30).
First use October 1966.

SN 272,052. Harrell Farms, Inc., Westport, Conn. Filed May 22, 1967.

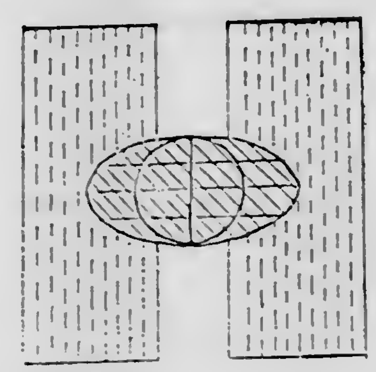

The drawing is lined for purple and green.
For Frozen Frying Chicken (Int. Cl. 29).
First use Apr. 6, 1967.

SN 272,053. Harrell Farms, Inc., Westport, Conn. Filed May 22, 1967.

HARRELL FARMS

For Frozen Frying Chicken (Int. Cl. 29).
First use Apr. 6, 1967.

SN 277,602. Stockton Tomato Co., Inc., Stockton, Calif., assignee of Stockton Tomato Company, d.b.a. Stockton Tomato Co., Stockton, Calif. Filed Aug. 7, 1967.

Ace

For Fresh Tomatoes (Int. Cl. 31).
First use at least as early as 1960.

SN 283,980. Cafe "El Marino," S.A., Mazatlan, Sinaloa, Mexico. Filed Nov. 2, 1967.

EL MARINO

The English translation of the Spanish words "El Marino" is "the sailor."
For Coffee (Int. Cl. 30).
First use September 1954; in commerce July 28, 1966.

SN 284,480. Jiggs Smoked Turkeys, Inc., Cordell, Okla. Filed Nov. 9, 1967.

For Smoked Turkeys (Int. Cl. 29).
First use at least as early as Sept. 1, 1963.

SN 284,881. Allen Foods, Inc., St. Louis, Mo. Filed Nov. 15, 1967.

The drawing is lined for red. The word "Whip" is disclaimed apart from the mark as shown.
For Dessert Topping Mix of a Non-Dairy Nature in Powdered Form, as Sold to Institutional Food Serving Establishments (Int. Cl. 30).
First use Aug. 18, 1967.

SN 287,100. Ray's Egg Company, Inc., d.b.a. Ray's Egg Co., Memphis, Tenn. Filed Dec. 18, 1967.

For Fresh Eggs (Int. Cl. 29).
First use Feb. 1, 1965.

SN 287,173. Societa per Azioni Abele Bertozzi, Parma, Italy. Filed Dec. 18, 1967.

PARMISSIMO

Priority claimed under Sec. 44(d) on Italian application filed June 17, 1967; Reg. No. 213,640, dated Aug. 4, 1967.
For Cheese (Int. Cl. 29).

SN 287,525. Dairy Merchandisers, Inc., Chicago, Ill. Filed Dec. 26, 1967.

COUNT-SURE

Owner of Reg. No. 684,157.
For Base for Making Artificially Sweetened Fruit Sherbet (Int. Cl. 30).
First use Dec. 8, 1967.

SN 292,837. Bernsteins' of Long Beach, Inc., Seal Beach, Calif. Filed Mar. 11, 1968.

B BERNSTEINS'

For Meatless Sauces and Salad Dressings (Int. Cls. 29 and 30).
First use 1910.

SN 293,182. United States Tobacco Company, New York, N.Y. Filed Mar. 13, 1968.

HOOTENANNY

Owner of Reg. No. 782,537.
For Candy Bars Wrapped for Retail Sale (Int. Cl. 30).
First use June 3, 1963.

SN 293,348. Bernard Food Industries, Inc., San Jose, Calif. Filed Mar. 15, 1968.

BAC-ETTES

For Prepared Foods—Namely, Bacon Flavored, Meatless Food Particles of High Protein Content (Int. Cl. 30).
First use June 16, 1966.

SN 293,690. Carnation Company, Los Angeles, Calif. Filed Mar. 20, 1968.

BUFFET

For Pet Foods (Int. Cl. 31).
First use Jan. 19, 1968.

SN 294,171. Cumberland Packing Corp., Brooklyn, N.Y. Filed Mar. 26, 1968.

ZERO

Owner of Reg. No. 629,669.
For Sugar Substitute (Int. Cl. 1).
First use Mar. 4, 1968.

SN 294,172. Cumberland Packing Corp., Brooklyn, N.Y. Filed Mar. 26, 1968.

SWEET & NO

Owner of Reg. No. 629,669.
For Sugar Substitute (Int. Cl. 1).
First use Mar. 4, 1968.

SN 295,074. R. B. Hayhoe & Co. Limited, Toronto, Ontario, Canada. Filed Mar. 18, 1968.

FLOWERDALE

For Tea (Int. Cl. 30).
First use February 1919; in commerce 1930.

SN 297,254. General Mills, Inc., Minneapolis, Minn. Filed May 3, 1968.

POWDER HORNS

For Ready To Eat Breakfast Cereal (Int. Cl. 30).
First use on or prior to July 3, 1967.

SN 297,257. General Mills, Inc., Minneapolis, Minn. Filed May 3, 1968.

UNICORNS

Owner of Reg. Nos. 260,771, 279,384, and 828,872.
For Puffed Corn Snacks (Int. Cl. 30).
First use on or prior to Apr. 2, 1968.

SN 297,509. Ralston Purina Company, St. Louis, Mo. Filed May 7, 1968.

TOP FLIGHT

For Pigeon Feed (Int. Cl. 31).
First use Feb. 15, 1965.

SN 297,834. The Procter & Gamble Company, Cincinnati, Ohio. Filed May 10, 1968.

NECTAR

Owner of Reg. No. 91,449.
For Edible Vegetable Shortening and Oil (Int. Cl. 29).
First use Oct. 11, 1911.

SN 297,916. Cargill, Incorporated, Minneapolis, Minn. Filed May 13, 1968.

BEEF KWIK-32

Owner of Reg. No. 766,735.
For Cattle Feed (Int. Cl. 31).
First use Sept. 14, 1967.

Class 47 — Wines

SN 233,679. Caves Alianca-Vinicola de Sangalhos S.A.R.L., Sangalhos, Portugal. Filed Dec. 1, 1965.

For Wines (Int. Cl. 33).
First use 1958; in commerce 1958.

Class 48 — Malt Beverages and Liquors

SN 286,489. Anheuser-Busch, Incorporated, St. Louis, Mo. Filed Dec. 8, 1967.

Owner of Reg. Nos. 749,963 and 805,717.
For Beer (Int. Cl. 32).
First use Dec. 5, 1961.

SN 286,807. Bosch Brewing Company, d.b.a. Bosch Brewing Co., Houghton, Mich. Filed Dec. 13, 1967.

Sauna

For Beer (Int. Cl. 32).
First use Nov. 29, 1967.

Class 49 — Distilled Alcoholic Liquors

SN 280,934. Continental Distilling Corporation, d.b.a. Continental Distillers Co., Philadelphia, Pa. Filed Sept. 22, 1967.

LORD CHESTERFIELD

For Gin (Int. Cl. 33).
First use at least as early as Feb. 9, 1967.

SN 281,275. The Drambuie Liqueur Co., Ltd., Edinburgh, Scotland. Filed S.R. Sept. 27, 1967; Am. P.R. June 14, 1968.

A DRAM OF DRAMBUIE—THE CORDIAL WITH THE SCOTCH WHISKY BASE

All of the wording of the trademark, except "Drambuie" is disclaimed. Owner of Reg. Nos. 303,089, 768,543, and others.
For Distilled Alcoholic Liqueur (Int. Cl. 33).
First use March 1962; in commerce March 1962.

SN 283,578. Schenley Industries, Inc., New York, N.Y. Filed Oct. 27, 1967.

BONAPARTE

Owner of Reg. No. 677,084.
For Brandy (Int. Cl. 33).
First use 1907.

Class 50 — Merchandise Not Otherwise Classified

SN 265,208. Edward M. Perkins, d.b.a. AAA Monumental Associates, Washington, D.C. Filed Feb. 21, 1967.

◇ ◇ ◇

For Grave Markers and Grave Stones (Int. Cl. 19).
First use about Apr. 15, 1963.

SN 269,125. Tamper-Proof-Tops Industries Ltd., Toronto, Ontario, Canada. Filed Apr. 13, 1967.

TAMPER-PROOF-TOPS

The words "Tamper-Proof-Tops" are disclaimed apart from the mark as shown. Owner of Canadian Reg. No. 156,621, dated May 3, 1968.
For Safety Tops for Bottles and Containers (Int. Cl. 20).

SN 274,294. The Allen System Inc., Glen Ellyn, Ill. Filed June 20, 1967.

For Plastic Tape for Use in Underground Installations for Facilitating Location of Underground Pipe, Cables, Conduit, and Other Underground Installations (Int. Cl. 17).
First use on or about Jan. 1, 1967.

SN 286,176. Reliance Trading Corporation, Hong Kong. Filed Dec. 4, 1967.

DECORART

For Artificial Flowers (Int. Cl. 26).
First use Oct. 31, 1967; in commerce Oct. 31, 1967.

SN 286,973. Mattel, Inc., Hawthorne, Calif. Filed Dec. 15, 1967.

KANDIMALS

For Accessory Pack Containing Food Molding Toy Products for Making Edible Toy Figures and Replicas, and Toy Materials for Making the Same, Including Candy Mixes, Icing Mixes, Molds, Eating Utensils, and Instructions (Int. Cl. 28).
First use Feb. 15, 1967.

SN 290,566. The Allen System Inc., Glen Ellyn, Ill. Filed Feb. 8, 1968.

DETECT-A-TAPE

For Tape for Use in Underground Installations for Facilitating Location of Underground Pipe, Cables, Conduit, and Other Underground Installations (Int. Cl. 17).
First use Oct. 30, 1967.

Class 51 — Cosmetics and Toilet Preparations

SN 167,635. L'Adorn, Inc., Great Neck, N.Y. Filed Apr. 26, 1963.

WHITE STAG

For Perfume and Cologne (Int. Cl. 3).
First use Jan. 11, 1963.

SN 229,474. Faberge, Inc., New York, N.Y., assignee of L. T. York Company, Kansas City, Mo. Filed Oct. 6, 1965.

TIGER

For Hair Wax, Hair Tonic, Cologne, After Shave Lotion, and Deodorant (Int. Cls. 3 and 5).
First use Oct. 8, 1964, on hair tonic.

SN 250,926. John H. Breck, Inc., Springfield, Mass. Filed July 25, 1966.

PASTEL LOOK

For Skin Cream (Int. Cl. 3).
First use Feb. 3, 1966.

SN 262,990. Parfums Guy Laroche, Paris, France. Filed Jan. 20, 1967.

Priority claimed under Sec. 44(d) on French Reg. No. 713,551, dated Aug. 2, 1966. "Fidji" is the French equivalent of the name of the islands known in English as "The Fiji Islands." Applicant disclaims the words Parfums Guy Laroche, Paris and the configuration of the bottle shape apart from their use in connection with the mark; however by such disclaimer applicant does not waive any common law rights which have been obtained in either the words or the bottle shape. Owner of U.S. Reg. No. 828,885.
For Perfumes, Toilet Waters, Skin Softener Lotions; Cosmetics—Namely, Lipstick, Rouge, and Face Powder; Hair Grooming Lotion, and Breath Freshener Mouthwash (Int. Cl. 3).
Subj. to Intf. with SN 284,815.

SN 269,856. Caron Corporation, New York, N.Y. Filed Apr. 21, 1967.

MUGUET DU BONHEUR

Applicant disclaims the word "Muguet" apart from the mark as a whole, while retaining all common law rights therein. The translation of the mark is "lily of the valley for good luck."
For Perfume, Toilet Water, and Cologne, Talcum Powder and Bath Oil (Int. Cl. 3).
First use December 1952.

SN 280,958. Marcel Jean-Marie Bleriot, Formerie (Oise), France. Filed Sept. 22, 1967.

ADRAGA

Owner of French Reg. No. 2,440, dated Oct. 25, 1958 (Beauvais); Natl. Inst. No. 115,165.
For Adhesive Powder for Dentures (Int. Cl. 5).

SN 282,012. J. Strickland & Co., Memphis, Tenn. Filed Oct. 6, 1967.

ROYAL

Owner of Reg. Nos. 596,898, 801,475, and others.
For Hair Dressing (Int. Cl. 3).
First use May 8, 1967.

SN 282,270. Clairol Incorporated, New York, N.Y. Filed Oct. 11, 1967.

HE DOES

For Kit Containing Hair Color Lotion and Hair Tonic, With or Without a Plastic Applicator (Int. Cl. 3).
First use May 6, 1965.

SN 283,368. Tiffany Perfumes, Ltd., New York, N.Y. Filed Oct. 25, 1967.

Tiffany PERFUME

The word "Perfume" is disclaimed apart from the mark as shown.
For Perfume (Int. Cl. 3).
First use Oct. 2, 1967.

SN 283,623. Clairol Incorporated, New York, N.Y. Filed Oct. 30, 1967.

AGE CUT

For Men's Hair Color Lotion (Int. Cl. 3).
First use Oct. 25, 1965.

SN 294,595. Clinique Laboratories, Inc., New York, N.Y. Filed Apr. 1, 1968.

C
CLINIQUE

For Cleansing Cream (Int. Cl. 3).
First use Mar. 15, 1968.

SN 296,920. The Gillette Company, d.b.a. The Toni Company, Boston, Mass. Filed Apr. 30, 1968.

SHAPE-IN

For Hair Spray (Int. Cl. 3).
First use Apr. 5, 1968.

SN 297,734. Amrcan, Inc., Chicago, Ill. Filed May 9, 1968.

KICK OFF

For Men's Cologne, Aftershave, Spray Deodorant, Talcum, Electric Pre-Shave Lotion, Hair Spray, and Hair Creme (Int. Cls. 3 and 5).
First use Apr. 3, 1968.

SN 297,735. Amrcan, Inc., Chicago, Ill. Filed May 9, 1968.

HOLE-IN-ONE

For Men's Cologne, Aftershave, Spray Deodorant, Talcum, Electric Pre-Shave Lotion, Hair Spray, and Hair Cream (Int. Cls. 3 and 5).
First use Apr. 3, 1968.

SN 297,745. Youngtown, Inc., New York, N.Y. Filed May 9, 1968.

YOUNGTOWN

For Cleansing Lotion, Moisturizing Lotion, and Skin Freshener (Int. Cl. 3).
First use Mar. 5, 1968.

Class 52 — Detergents and Soaps

SN 243,952. John H. Breck, Inc., Springfield, Mass. Filed Apr. 21, 1966.

PASTEL LOOK

For Hair Shampoo (Int. Cl. 3).
First use Mar. 22, 1966.

SN 271,538. Speco, Inc., Oklahoma City, Okla. Filed May 15, 1967.

HOUSE-KEEPER

For All-Purpose Cleaning Composition (Int. Cl. 3).
First use Mar. 15, 1967.

SN 276,156. Miracle Products, Inc., Wichita, Kans., assignee of Miracle-Strip, Inc., Wichita, Kans. Filed July 17, 1967.

MIRACLE-STRIP

For Exterior Paint Remover (Int. Cl. 3).
First use Aug. 10, 1966.

SN 279,298. Interstate Industries, Inc., d.b.a. Interstate Chemical Company, Kansas City, Mo. Filed Aug. 29, 1967.

CLEAN FRONT

For Detergent Concentrate for Use in the Preparation of Germicides and Detergent-Sanitizers (Int. Cl. 1).
First use Dec. 7, 1966.

SN 286,001. Coulter Diagnostics, Inc., Miami Springs, Fla. Filed Dec. 1, 1967.

ISOTERGE

For Blended Detergent Concentrate for Cleaning Laboratory-Type Glassware (Int. Cl. 3).
First use on or about Sept. 20, 1967.

SN 286,322. Calgon Corporation, Pittsburgh, Pa. Filed Dec. 6, 1967.

SYNOCA

For Detergent Chemical Compound for Felt-Washing in Paper Mills (Int. Cl. 1).
First use Feb. 8, 1943.

SN 287,372. Michigan Hot Rod Association, Centerline, Mich. Filed Dec. 21, 1967.

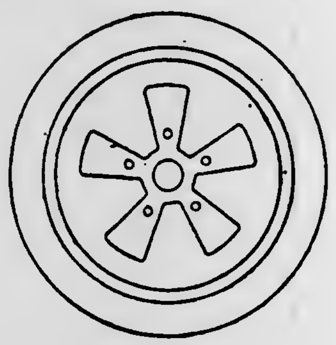

For Upholstery Cleaner and Vinyl Car Top Cleaner (Int. Cl. 3).
First use Feb. 15, 1966.

SN 293,992. Sani-Craft Chemical Corporation, Sarasota, Fla. Filed Mar. 25, 1968.

SANI-CRAFT

For Deodorant Cleaner for Chemical Toilets, Self-Contained Toilets, and Waste-Holding Tanks (Int. Cl. 5).
First use Nov. 17, 1967.

SN 293,993. Sani-Craft Chemical Corporation, Sarasota, Fla. Filed Mar. 25, 1968.

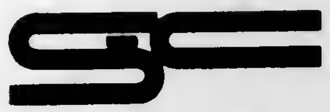

For Deodorant Cleaner for Chemical Toilets, Self-Contained Toilets, and Waste-Holding Tanks (Int. Cl. 5).
First use Nov. 17, 1967.

SN 297,925. Kenco Chemical & Manufacturing Co., Inc., Jacksonville, Fla. Filed May 13, 1968.

MIRACLE

For Solvents To Clean and Remove Obstructions in Drain Pipes (Int. Cl. 3).
First use Oct. 1, 1967.

SERVICE MARKS

Class 100 — Miscellaneous

SN 250,535. Thrift Drug Company of Pennsylvania, Pittsburgh, Pa. Filed July 18, 1966.

Applicant claims no exclusive rights in the word "Drug" or the representation of the mortar and pestle, apart from the mark as shown.
For Pharmaceutical Prescription Services (Int. Cl. 42).
First use on or prior to July 25, 1961.
Subj. to Intf. with SN 251,825.

SN 257,423. Edmond Bordeaux Szekely, d.b.a. 21st Century Health & Beauty Resort, San Diego, Calif. Filed Oct. 27, 1966.

21ST CENTURY

For Health and Beauty Resort Services (Int. Cl. 42).
First use Sept. 15, 1966.

SN 266,229. International Escort Ltd., Zurich, Switzerland. Filed Mar. 8, 1967.

Applicant disclaims the words "International Escort" and "World Wide" apart from the mark as shown.
For Hostess Services of All Kinds (Int. Cl. 42).
First use November 1966; in commerce December 1966.

SN 278,826. August C. Schoenfeld, d.b.a. Dutch Village Motor Inns of America, Belleville, Mich. Filed Aug. 22, 1967.

The words "Motor Inns of America" are disclaimed apart from the mark as shown.
For Motel Services (Int. Cl. 42).
First use on or about July 1, 1967.

SN 280,090. Peanut Research & Testing Laboratories, Inc., Edenton, N.C. Filed Sept. 11, 1967.

Applicant disclaims the representation of the peanut, apart from the mark as shown, without prejudice to its common law rights.
For Providing Research, Testing, Analysis, and Laboratory Services to All Segments of the Edible Nut Industry (Int. Cl. 42).
First use August 1967.

SN 282,860. Intercontinental Coffee Service, Inc., Rosemont, Ill. Filed Oct. 19, 1967.

INTERCONTINENTAL

For Dispensing of Beverages on the Premises of the Customer or Consumer—Namely, Hot Beverages Prepared by and Dispensed From Self-Service Machines (Int. Cl. 42).
First use Jan. 24, 1966.

SN 283,129. S. S. Kresge Company, Detroit, Mich. Filed Oct. 23, 1967.

Owner of Reg. Nos. 743,912 and 834,084.
For Restaurant Services (Int. Cl. 42).
First use on or before Sept. 28, 1967.

SN 294,778. Midar Incorporated, Magnolia, Ark. Filed Apr. 3, 1968.

No claim is made to the wording "Delicious Pizza" apart from the mark as shown.
For Restaurant Services (Int. Cl. 42).
First use Dec. 12, 1966.

SN 295,286. Hobo Joe's, Inc., Scottsdale, Ariz. Filed Apr. 10, 1968.

No claim is made to the words "Coffee Shops" apart from the mark as shown. Owner of Reg. No. 827,137.
For Restaurant Services (Int. Cl. 42).
First use on or about Sept. 21, 1965.

Class 101 — Advertising and Business

SN 255,980. Hipodromo de Tijuana, Tijuana, Baja California, Mexico. Filed Oct. 7, 1966.

49'ER

For Providing Information Regarding Race Track Wagering, Hotel and Motel Recommendation and Clubhouse Reservations for Greyhound Racing Fans Traveling Between the United States and Mexico, for Accommodations in the Latter Country (Int. Cl. 35).
First use Apr. 13, 1957; in commerce Apr. 13, 1957.

SN 293,108. Careers Incorporated, New York, N.Y. Filed Mar. 13, 1968.

SOUND RECRUITING

Owner of Reg. Nos. 562,994, 842,642, and others.
For Employment Agency Services Whereby Employers Are Aided in Contacting Job Applicants Through Tape Recordings Setting Forth Available Employment Opportunities (Int. Cl. 35).
First use Feb. 15, 1968.

Class 102 — Insurance and Financial

SN 200,424. The Detroit Bank and Trust Company, Detroit, Mich. Filed Aug. 24, 1964.

The representation of the Indian in the drawing is fanciful.
For Commercial and Savings Banking Services—Namely, Depository, Loans, Mortgages, Drafts, Checks, Collections, Escrow and Fiscal Agent, Letters of Credit, Agent for the Sale, Purchase and Delivery of Securities, and Miscellaneous Banking Services (Int. Cl. 36).
First use Aug. 1, 1963.

SN 262,724. Twin City Federal Savings & Loan Association, Minneapolis, Minn. Filed Jan. 17, 1967.

TUCKA BUCKA DAY AWAY

For Savings and Loan Services (Int. Cl. 36).
First use June 7, 1959.

SN 273,441. Meridian Mutual Insurance Company, Indianapolis, Ind. Filed June 9, 1967.

PACEMAKER

Owner of Reg. No. 705,077.
For Underwriting of Life and Homeowners Insurance (Int. Cl. 36).
First use January 1964.

SN 275,999. Sy Breslow, d.b.a. Sy Breslow & Associates, Santa Ana, Calif. Filed July 14, 1967.

For Insurance Brokerage Service (Int. Cl. 36).
First use July 1, 1967.

Class 103 — Construction and Repair

SN 264,330. Montecito Manufacturing Company, Santa Barbara, Calif. Filed Feb. 9, 1967.

Applicant disclaims the words "Linen Supply" apart from the mark as shown.
For Linen Supply Services (Int. Cl. 37).
First use Jan. 1, 1958.

SN 265,392. Bauer Dredging Co., Inc., Jeffersonville, Ind. Filed Feb. 24, 1967.

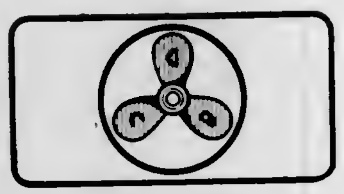

The drawing is lined for the color red, but no claim is made for the color red as part of the mark.
For Dredging Services and Construction of Pipeline, Water Channels, Bridges, Harbors, Canals, and Roads (Int. Cl. 37).
First use Mar. 1, 1966.

SN 273,401. International Bakerage, Inc., Atlanta, Ga. Filed June 8, 1967.

For Industrial Waste Removal (Int. Cl. 37).
First use on or about Sept. 1, 1966.

SN 281,217. Parts, Inc., Memphis, Tenn. Filed Sept. 26, 1967.

No registration rights are claimed for the word "Shop" apart from the mark as shown.
For Automotive Repair Services (Int. Cl. 37).
First use July 1967.

SN 287,758. Medric H. Pleau, Jr., d.b.a. Astro, Florissant, Mo. Filed Dec. 28, 1967.

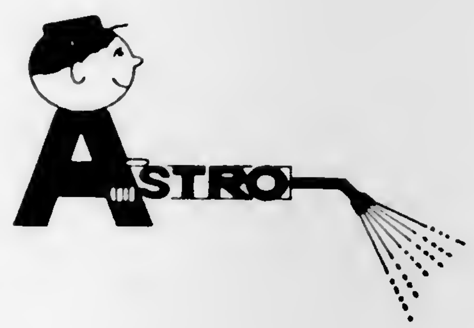

For Steam Cleaning and Pressure Washing of Commercial, Industrial, and Residential Structures and All Types of Vehicles; Brightening of Aluminum Trailers, Awnings, and Other Aluminum Products (Int. Cl. 37).
First use Sept. 10, 1966.

SN 293,785. The Alliance Manufacturing Company, Inc., Alliance, Ohio. Filed Mar. 21, 1968.

GENIE

Owner of Reg. Nos. 436,072, 841,966, and others.
For Repair and Maintenance of Electric and Electronic Equipment (Int. Cl. 37).
First use June 27, 1965.

SN 294,360. Simoniz Company, Chicago, Ill. Filed Mar. 28, 1968.

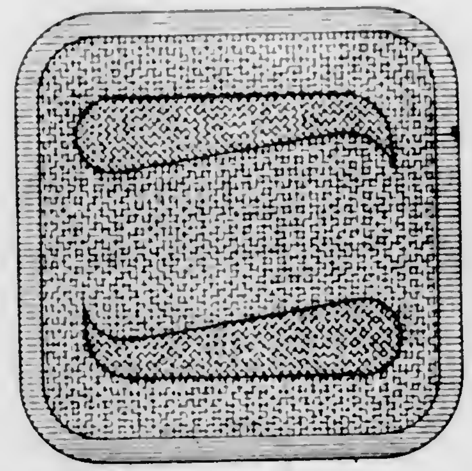

The drawing is lined for the colors blue, orange, and yellow, but color is not a part of the mark.
For Automobile Washing and Polishing Services (Int. Cl. 37).
First use July 27, 1967.

SN 296,927. Radio Corporation of America, New York, N.Y. Filed Apr. 30, 1968.

RCA

Owner of Reg. Nos. 650,272, 687,005, and others.
For Maintenance, Repair and Inspection Service for Radiotelephone and Radiotelegraph Apparatus for Marine Use and for Marine Electronic Apparatus; Installation, Inspection and Repair of Electric and Electronic Apparatus and Equipment, Their Components, Parts and Accessories in the Field of Radio, Television, Sound Recording and Reproducing, Maritime Apparatus and Equipment, Home Appliances, Heating Apparatus, Electric and Electronic Apparatus for the Home and Industrial Electric and Electronic Apparatus (Int. Cl. 37).
First use at least as early as Mar. 1, 1968; during 1922 in a different form.

SN 296,928. Radio Corporation of America, New York, N.Y. Filed Apr. 30, 1968.

RCA

Owner of Reg. Nos. 650,272, 687,005, and others.
For Maintenance, Repair and Inspection Service for Radiotelephone and Radiotelegraph Apparatus for Marine Use and for Marine Electronic Apparatus; Installation, Inspection and Repair of Electric and Electronic Apparatus and Equipment, Their Components, Parts and Accessories in the Field of Radio, Television, Sound Recording and Reproducing, Maritime Apparatus and Equipment, Home Appliances, Heating Apparatus, Electric and Electronic Apparatus for the Home and Industrial Electric and Electronic Apparatus (Int. Cl. 37).
First use during 1922.

Class 106 — Material Treatment

SN 297,002. J. H. Baxter & Co., d.b.a. J. H. Baxter, San Mateo, Calif. Filed May 1, 1968.

greenpole

For Preservative Processing of Wood Poles (Int. Cl. 40).
First use Apr. 8, 1968.

Class 107 — Education and Entertainment

SN 261,784. Arc Sound Limited, d.b.a. The Yorkville Organization, Toronto, Ontario, Canada. Filed Jan. 3, 1967.

THE STITCH IN TYME

For Musical Entertainment Services Performed by a Musical and Vocal Group (Int. Cl. 41).
First use Feb. 1, 1966; in commerce Feb. 1, 1966.

SN 275,775. National Export Services and Containerization Exposition, Inc., Detroit, Mich. Filed July 11, 1967.

Applicant disclaims the wording "National Export Services & Containerization Exposition" apart from the mark as shown.
For Staging Trade Expositions for Those in the Field of Export and Containerization (Int. Cl. 41).
First use Apr. 1, 1967.

SN 288,244. Tri-Arts Productions, Rockford, Ill. Filed Jan. 5, 1968.

MR. MUSTACHE

For Entertainment Services—Namely, a Television Program Designed for Children (Int. Cl. 41).
First use on or about Sept. 27, 1967.

TRADEMARK REGISTRATIONS ISSUED
PRINCIPAL REGISTER

Class 1 — Raw or Partly Prepared Materials

854,395. DLC. Natrochem, Inc., by change of name from National Rosin Oil Products, Inc. MULTIPLE CLASS (Classes 1, 6, and 15). SN 242,380. Pub. 5-28-68. Filed 3-31-66

854,396. RUCOFLEX. Hooker Chemical Corporation. MULTIPLE CLASS (Classes 1 and 6). SN 265,823. Pub. 5-28-68. Filed 3-2-67.

854,397. J AND P AND DESIGN. Jackson & Perkins Company. MULTIPLE CLASS (Classes 1, 6, and 10). SN 268,839. Pub. 5-28-68. Filed 4-11-67.

854,398. AMPOL. American Polymers, Inc. SN 269,275. Pub. 3-12-68. Filed 4-17-67.

854,399. CV. James C. Kile. SN 274,633. Pub. 5-28-68. Filed 6-23-67.

854,400. HASTINGS. Hastings & Co., Inc. MULTIPLE CLASS (Classes 1 and 14). SN 275,193. Pub. 5-28-68. Filed 7-3-67.

854,401. SUR-FLEX. Flex-O-Glass, Inc. SN 275,439. Pub. 5-28-68. Filed 7-6-67.

Class 2 — Receptacles

854,402. HOMELINE. United States Envelope Company, assignee of Homeline Corporation. SN 218,767. Pub. 4-12-66. Filed 5-13-65.

854,403. HEFTY. Mobil Oil Corporation, by change of name from Socony Mobil Oil Company, Inc. SN 243,922. Pub. 5-28-68. Filed 4-19-66.

854,404. KLIK-TOP. William Satz. SN 254,323. Pub. 5-28-68. Filed 9-12-66.

854,405. DAVMOR. Davmor Industries, Inc. MULTIPLE CLASS (Classes 2, 31, 32, and 34). SN 259,524. Pub. 5-28-68. Filed 11-28-66.

854,406. POLY-WEVE AND DESIGN. Langston Bag Company. SN 264,941. Pub. 5-28-68. Filed 2-17-67.

854,407. HANDI-TAP. Liqui-Box Corporation. SN 270,929. Pub. 5-28-68. Filed 5-8-67.

854,408. KIT'N KABOODLE. Kenneth G. Sams. SN 271,643. Pub. 5-28-68. Filed 5-16-67.

854,409. CARNATION. Carnation Company. SN 272,583. Pub. 5-28-68. Filed 5-29-67.

854,410. FANCIFUL A (DESIGN). American Can Company. SN 278,860. Pub. 5-28-68. Filed 8-23-67.

854,411. MINI-MAT. Hedwin Corporation. SN 280,228. Pub. 5-28-68. Filed 9-13-67.

854,412. SCOTT. Scott Paper Company. SN 280,974. Pub. 5-28-68. Filed 9-22-67.

854,413. FLORIBEL. Peter Herrli. SN 282,700. Pub. 5-28-68. Filed 10-17-67.

854,414. TOWER DESIGN. Tower Packaging Company. SN 282,940. Pub. 5-28-68. Filed 10-19-67.

854,415. FRYTRAY. William F. Cowles, Inc. SN 283,985. Pub. 5-28-68. Filed 11-2-67.

854,416. STUDIOPAK. General Aniline & Film Corporation. SN 284,465. Pub. 5-28-68. Filed 11-9-67.

854,417. NUGGET. Nugget Distributors' Cooperative of America, Inc., d.b.a. Nugget Distributors, Inc. SN 286,071. Pub. 5-28-68. Filed 12-4-67.

Class 3 — Baggage, Animal Equipments, Portfolios, and Pocketbooks

854,418. CORONET (DESIGN). Countess Mara, Inc. MULTIPLE CLASS (Classes 3, 28, 39, 51, and 52). SN 261,260. Pub. 5-28-68. Filed 12-22-66.

854,419. SHELL. Shell Oil Company. SN 276,695. Pub. 5-28-68. Filed 7-24-67.

854,420. CLUTCH-ER-INO. Charles Doppelt & Co., Inc. SN 279,381. Pub. 5-28-68. Filed 8-30-67.

854,421. GRAND TOUR. Reliable Luggage, Inc. SN 279,957. Pub. 5-28-68. Filed 9-8-67.

854,422. DOG AND COLLAR (DESIGN). A. H. Robins Company, Incorporated. SN 290,534. Pub. 5-28-68. Filed 2-7-68.

Class 4 — Abrasives and Polishing Materials

854,423. BISON AND DESIGN. Bison Corporation. SN 253,626. Pub. 5-28-68. Filed 9-1-66.

854,424. MARTIN AND DESIGN. Jan-Mar Industries. SN 272,325. Pub. 5-28-68. Filed 5-12-67.

854,425. BUFFMASTER. Mirror Bright Polish Co. SN 274,819. Pub. 5-28-68. Filed 6-26-67.

854,426. RAGE. Westwood Chemical Co., Inc. MULTIPLE CLASS (Classes 4, 6, and 52). SN 279,247. Pub. 5-28-68. Filed 8-29-67.

Class 5 — Adhesives

854,427. VOLTAX AND DESIGN. The Voltax Company, Inc. MULTIPLE CLASS (Classes 5, 12, and 16). SN 266,705. Pub. 5-28-68. Filed 3-15-67.

854,428. VIPACO AND DESIGN. Viking-Criterion Paper Corporation. SN 267,460. Pub. 5-28-68. Filed 3-23-67.

854,429. MICOBOND. The Dexter Corporation. SN 271,601. Pub. 5-28-68. Filed 5-16-67.

Class 6 — Chemicals and Chemical Compositions

854,395. (See Class 1 for this trademark.)

854,396. (See Class 1 for this trademark.)

854,397. (See Class 1 for this trademark.)

854,426. (See Class 4 for this trademark.)

854,430. AGRITROL. Merck & Co., Inc. SN 265,538. Pub. 5-28-68. Filed 2-27-67.

854,431. SANTOSAFE. Monsanto Company. MULTIPLE CLASS (Classes 6 and 15). SN 265,725. Pub. 5-28-68. Filed 3-1-67.

854,432. SEIBERLING. The Firestone Tire & Rubber Company. SN 266,213. Pub. 5-28-68. Filed 3-8-67.

854,433. SILVER-IT. Re-Ox Corporation. SN 267,665. Pub. 5-28-68. Filed 3-27-67.

854,434. VARAMIDE. Varney Chemical Corporation. SN 268,908. Pub. 2-13-68. Filed 4-11-67.

854,435. PINOFIRAN. Universal Oil Products Company. SN 273,338. Pub. 5-28-68. Filed 6-8-67.

854,436. CETOFIRAN. Universal Oil Products Company. SN 273,339. Pub. 5-28-68. Filed 6-8-67.

854,437. POLY-CLEAR. Transene Company, Incorporated. SN 273,429. Pub. 4-16-68. Filed 6-8-67.

854,438. ESKATEST. Smith Kline & French Laboratories. SN 276,046. Pub. 5-28-68. Filed 7-14-67.

854,439. SUPER D. Thompson-Hayward Chemical Company. SN 279,118. Pub. 5-28-68. Filed 8-25-67.

854,440. SOLAIR. Swift & Company. SN 279,229. Pub. 5-28-68. Filed 8-28-67.

854,441. PC-430. Plunkett Chemical Company. SN 279,325. Pub. 5-28-68. Filed 8-29-67.

854,442. PC-150. Plunkett Chemical Company. SN 279,326. Pub. 5-28-68. Filed 8-29-67.

854,443. VERSATONE. Eastman Kodak Company. SN 279,383. Pub. 5-28-68. Filed 8-30-67.

854,444. AMBITHION. American Cyanamid Company. SN 279,609. Pub. 5-28-68. Filed 9-5-67.

854,445. FEN-ALL. Tenneco Chemicals, Inc. SN 285,474. Pub. 5-28-68. Filed 11-22-67.

854,446. DINOCON. Diamond Shamrock Corporation. SN 289,055. Pub. 5-28-68. Filed 1-18-68.

854,447. LAC-DEHYSTRATE. Warner-Lambert Pharmaceutical Company. SN 291,690. Pub. 5-28-68. Filed 2-23-68.

854,448. SWEETHEART. Purex Corporation, Ltd. SN 292,057. Pub. 5-28-68. Filed 2-28-68.

Class 8 — Smokers' Articles, Not Including Tobacco Products

854,449. JERRICAN. The Copley Hill Company Incorporated. SN 292,472. Pub. 5-28-68. Filed 3-5-68.

Class 9 — Explosives, Firearms, Equipments, and Projectiles

854,450. HOLIDAY. Washington Fireworks Co., Inc. SN 273,140. Pub. 5-28-68. Filed 6-5-67.

854,451. NON-CORR. Cartuchos Deportivos de Mexico, S.A. SN 277,342. Pub. 5-28-68. Filed 8-2-67.

854,452. MARTIAL. Stoeger Arms Corporation. SN 283,170. Pub. 5-28-68. Filed 10-23-67.

854,453. 49'R. Clipper Pyrotechnic Corp. SN 286,326. Pub. 5-28-68. Filed 12-6-67.

Class 10 — Fertilizers

854,397. (See Class 1 for this trademark.)

854,454. MISCELLANEOUS DESIGN. Western Peat Moss Ltd. SN 266,962. Pub. 5-28-68. Filed 2-13-67.

854,455. AEROPRILLS. American Cyanamid Company. SN 278,656. Pub. 5-28-68. Filed 8-21-67.

854,456. POULTRY PEAT. George Sroda, d.b.a. Turkey Peat Co. SN 279,769. Pub. 5-28-68. Filed 9-5-67.

854,457. FLUID-FLO. F. S. Royster Guano Co. SN 282,210. Pub. 5-28-68. Filed 10-10-67.

Class 12 — Construction Materials

854,427. (See Class 5 for this trademark.)

854,458. FABRIFORM. Construction Techniques, Inc. SN 242,434. Pub. 5-28-68. Filed 4-1-66.

854,459. POXIFLEX. Palmer Products Incorporated. SN 265,327. Pub. 5-28-68. Filed 2-23-67.

854,460. POLYCAULK. International Paint Company, Inc. SN 267,526. Pub. 4-16-68. Filed 3-24-67.

854,461. PROFIT-PAK. Lowe's Companies, Inc. SN 272,197. Pub. 5-28-68. Filed 5-23-67.

854,462. MULTI-THERM. W. R. Grace & Co. SN 275,261. Pub. 5-28-68. Filed 7-3-67.

854,463. BODYMAN. The Bondo Corporation. SN 276,095. Pub. 5-28-68. Filed 7-17-67.

854,464. WTW AND DESIGN. James C. Wilborn and Sons, Inc. SN 276,977. Pub. 5-28-68. Filed 7-27-67.

854,465. REICOTE. Reichhold Chemicals, Inc. SN 278,265. Pub. 5-28-68. Filed 7-19-67.

854,466. STRATFORD. Brown Company. SN 278,462. Pub. 5-28-68. Filed 8-17-67.

854,467. PORT-A-PAD. Universal Industries, Inc. SN 278,542. Pub. 5-28-68. Filed 8-17-67.

854,468. FROSTANE. Visador Company. SN 280,495. Pub. 5-28-68. Filed 9-15-67.

854,469. FLAME-SAFE. Johns-Manville Corporation. SN 280,955. Pub. 5-28-68. Filed 9-22-67.

854,470. SPRINGCORE. Roaring Spring Blank Book Co., Inc. SN 281,722. Pub. 5-28-68. Filed 10-3-67.

854,471. TRINTESSA. American Cyanamid Company. SN 283,082. Pub. 5-28-68. Filed 10-23-67.

854,472. GLAZOL. United Gilsonite Laboratories. SN 283,370. Pub. 5-28-68. Filed 10-25-67.

854,473. MISCELLANEOUS DESIGN. Roger J. Halle. SN 283,889. Pub. 5-28-68. Filed 11-1-67.

854,474. FIRE-THERM. National Gypsum Company. SN 284,390. Pub. 5-28-68. Filed 11-8-67.

854,475. CEMECHROME. Bio-Organic Chemicals, Inc. SN 284,583. Pub. 5-28-68. Filed 11-13-67.

854,476. INSEL-VINYL. Mastic Corporation. SN 287,033. Pub. 5-28-68. Filed 12-15-67.

854,477. DURANYL. Mastic Corporation. SN 288,221. Pub. 5-28-68. Filed 1-5-68.

854,478. EXACAST. American Abrasive Metals Company. SN 291,127. Pub. 5-28-68. Filed 2-15-68.

854,479. AMCOLUN. American Abrasive Metals Company. SN 291,128. Pub. 5-28-68. Filed 2-15-68.

854,480. POXEPLATE. Fred J. Coccagna, d.b.a. Industrial Floor Company. SN 292,451. Pub. 5-28-68. Filed 3-5-68.

Class 13 — Hardware and Plumbing and Steam-Fitting Supplies

854,481. STRATO-TIE. Strato Tool Corporation. MULTIPLE CLASS (Classes 13 and 23). SN 243,924. Pub. 5-28-68. Filed 4-20-66.

854,482. READY-PAK. Dorman Products, Inc. SN 248,315. Pub. 5-28-68. Filed 6-17-66.

854,483. ZIPAIRE. Ideal Fastener Corporation. SN 256,737. Pub. 5-28-68. Filed 10-19-66.

854,484. SEVAX. Societe d'Etudes Verrieres Appliquees. SN 270,618. Pub. 5-28-68. Filed 5-3-67.

854,485. ICC HERION AND DESIGN. International Controls Corp. SN 271,799. Pub. 5-28-68. Filed 5-18-67.

854,486. SPRAYMATE. Martin Rubber Company. SN 272,619. Pub. 5-28-68. Filed 5-29-67.

854,487. MISCELLANEOUS DESIGN. Rex Chainbelt Inc., assignee of Camloc Fastener Corporation. MULTIPLE CLASS (Classes 13 and 23). SN 274,560. Pub. 5-28-68. Filed 6-23-67.

854,488. BER-LOK. Bergen Wire Rope Co. SN 274,850. Pub. 5-28-68. Filed 6-27-67.

854,489. TRISOLATOR. Stoneman Engineering & Manufacturing Co. SN 275,316. Pub. 5-28-68. Filed 7-3-67.

854,490. ZIP ZTRIP. ZZ Corp. SN 276,270. Pub. 5-28-68. Filed 7-18-67.

854,491. SPIRE. Firth Cleveland Fastenings Limited. SN 276,378. Pub. 5-28-68. Filed 5-8-67.

854,492. NEPTUNE. Revere Copper and Brass Incorporated. SN 276,868. Pub. 5-28-68. Filed 7-26-67.

854,493. PLUMB SHOP. Brass-Craft Manufacturing Company. SN 277,015. Pub. 5-28-68. Filed 7-28-67.

854,494. BRANCHLET. Allied Piping Products Company of Pennsylvania, Inc. SN 277,121. Pub. 5-28-68. Filed 7-31-67.

854,495. STA-LOK. Shur-Lok Corporation. SN 277,223. Pub. 5-28-68. Filed 7-31-67.

854,496. HANG-EEZ. Quickie Manufacturing Corporation. SN 281,623. Pub. 5-28-68. Filed 10-2-67.

Class 14 — Metals and Metal Castings and Forgings

854,400. (See Class 1 for this trademark.)

854,497. CARPENTER FLEXCOTE. The Carpenter Steel Company. SN 167,367. Pub. 5-28-68. Filed 4-23-63.

854,498. EDMALLOY. Firth Sterling Corporation, assignee of Firth Sterling, Inc. SN 246,549. Pub. 5-28-68. Filed 5-25-66.

854,499. PERFA-FOIL. Roll-O-Sheets, Inc. SN 274,776. Pub. 5-28-68. Filed 6-26-67.

854,500. VARI-STAR. L. A. Draper & Son, Inc. SN 281,875. Pub. 5-28-68. Filed 10-5-67.

854,501. AL AND DESIGN. Allegheny Ludlum Steel Corporation. SN 282,337. Pub. 5-28-68. Filed 10-12-67.

854,502. B & M. The Anaconda Company. SN 284,073. Pub. 5-28-68. Filed 11-3-67.

854,503. CAMACO. Casting Materials Company, Inc. SN 284,448. Pub. 5-28-68. Filed 11-9-67.

Class 15 — Oils and Greases

854,395. (See Class 1 for this trademark.)

854,431. (See Class 6 for this trademark.)

854,504. GO-JO AND DESIGN. Gojer, Inc. MULTIPLE CLASS (Classes 15 and 52). SN 260,696. Pub. 5-28-68. Filed 12-14-66.

854,505. MAXIMUS. The Frontier Refining Company. SN 267,286. Pub. 5-28-68. Filed 3-20-67.

854,506. SILCOSTRIP. Imperial Chemical Industries Limited. SN 272,835. Pub. 5-28-68. Filed 6-1-67.

854,507. CONOCO. Continental Oil Company. SN 280,567. Pub. 5-28-68. Filed 9-18-67.

854,508. TORNUS. Shell Oil Company. SN 282,729. Pub. 5-28-68. Filed 10-17-67.

854,509. TIARA. Shell Oil Company. SN 282,730. Pub. 5-28-68. Filed 10-17-67.

854,510. ANGEL WINGS. Carolina Company, Inc., d.b.a. The Carolina Soap & Candle Makers. SN 282,979. Pub. 5-28-68. Filed 10-20-67.

Class 16 — Protective and Decorative Coatings

854,427. (See Class 5 for this trademark.)

854,511. STA-RITE AND DESIGN. Mobile Paint Mfg. Co., Inc. SN 259,259. Pub. 5-28-68. Filed 11-22-66.

854,512. FOCUS. Texize Chemicals, Inc. SN 266,798. Pub. 5-28-68. Filed 3-15-67.

854,513. MUVC. Miller Protective Coatings, Inc. SN 270,073. Pub. 5-28-68. Filed 4-26-67.

854,514. BARRIER. National Chemical Corporation. SN 274,885. Pub. 5-28-68. Filed 6-27-67.

854,515. BILTMORE. J. J. Newberry Co., d.b.a. The Newberry Co. SN 275,780. Pub. 5-28-68. Filed 7-11-67.

854,516. REFLECTEX. Conrad Sovig Co., Inc. SN 276,004. Pub. 5-28-68. Filed 7-14-67.

854,517. TOP-GLOSS. Epic Chemicals, Inc. SN 276,114. Pub. 5-28-68. Filed 7-17-67.

854,518. TROUBLE-SHOOTER. Lehman Bros. Corp. SN 276,239. Pub. 5-28-68. Filed 7-18-67.

854,519. SLIP-SHOT. Shooting Equipment, Inc. SN 276,703. Pub. 5-28-68. Filed 7-24-67.

854,520. KK KIT KOTE AND DESIGN. California Aerosol Company. SN 278,189. Pub. 5-28-68. Filed 8-14-67.

Class 17 — Tobacco Products

854,521. SNUG HARBOUR. Snug Harbour Tobacconists, Ltd. SN 275,082. Pub. 4-9-68. Filed 6-29-67.

854,522. FLUTE. Philip Morris Incorporated. SN 284,550. Pub. 5-28-68. Filed 11-13-67.

854,523. PANORAMA. Consolidated Cigar Corporation, assignee of Consolidated Cigar Corporation. SN 288,004. Pub. 5-14-68. Filed 1-3-68.

854,524. BRAVURA. Bayuk Cigars Incorporated. SN 292,338. Pub. 5-28-68. Filed 3-4-68.

Class 18 — Medicines and Pharmaceutical Preparations

854,525. CAGE-PREP. Agway, Inc. SN 256,259. Pub. 5-28-68. Filed 10-12-66.

854,526. AMERICAN HOSPITAL SUPPLY A AND DESIGN. American Hospital Supply Corporation. SN 259,790. Pub. 5-28-68. Filed 12-1-66.

854,527. VITAMINDE. Flint River Mills, Inc. SN 263,044. Pub. 4-16-68. Filed 1-23-67.

854,528. FARMHAND. Richardson-Merrell Inc. SN 269,598. Pub. 4-16-68. Filed 4-20-67.

854,529. RONDEC. Abbott Laboratories, d.b.a. Ross Laboratories. SN 287,396. Pub. 5-28-68. Filed 12-22-67.

854,530. OBATE. Mead Johnson & Company. SN 291,675. Pub. 5-28-68. Filed 2-23-68.

Class 19 — Vehicles

854,531. CARLTON. Raleigh Industries, Ltd. MULTIPLE CLASS (Classes 19 and 22). SN 230,434. Pub. 5-28-68. Filed 10-18-65.

854,532. SUNSCREEN. Outboard Marine Corporation. SN 252,489. Pub. 5-28-68. Filed 8-16-66.

854,533. SMI. Sumitomo Metal Industries, Ltd. MULTIPLE CLASS (Classes 19 and 23). SN 261,950. Pub. 5-28-68. Filed 1-4-67.

854,534. SAVASCRAPE. Court Thompson. SN 270,622. Pub. 5-28-68. Filed 5-3-67.

854,535. SW 800. The Symington Wayne Corporation. SN 273,699. Pub. 5-28-68. Filed 6-12-67.

854,536. MACH 1. Ford Motor Company. SN 275,925. Pub. 5-28-68. Filed 7-13-67.

854,537. TOTA TON. Tota-Ton, Inc. SN 276,882. Pub. 5-28-68. Filed 7-26-67.

Class 21 — Electrical Apparatus, Machines, and Supplies

854,538. RIVIERA. United Silver and Cutlery Company. SN 217,224. Pub. 5-28-68. Filed 4-23-65.

854,539. HI-G. HI-G Incorporated. SN 225,762. Pub. 5-31-66. Filed 8-16-65.

854,540. 77. Metaframe Corporation, by change of name from Aquariums Incorporated. SN 230,125. Pub. 5-2-67. Filed 10-14-65.

854,541. TERM-I-LITE. Security Electric Corporation, assignee of Garner H. Grogan, Jr., d.b.a. Security Electric. SN 254,276. Pub. 5-28-68. Filed 9-12-66.

854,542. HVP HUDSON AND DESIGN. Hudson National, Inc. SN 259,830. Pub. 5-28-68. Filed 12-1-66.

854,543. SEMPAC. Semtech Corporation. SN 260,279. Pub. 5-28-68. Filed 12-7-66.

854,544. MICROCEIVER. Fisher Radio Corporation. SN 263,823. Pub. 5-28-68. Filed 2-2-67.

854,545. THE MAGNIFICENT MAGNAVOX AND DESIGN. The Magnavox Company. MULTIPLE CLASS (Classes 21 and 36). SN 263,984. Pub. 5-28-68. Filed 2-6-67.

854,546. PROGRAM COMMANDER. Jerrold Electronics Corporation. SN 266,543. Pub. 5-28-68. Filed 3-13-67.

854,547. SYNCHRO-LAB. British Industries Corporation. SN 271,439. Pub. 5-28-68. Filed 5-15-67.

854,548. VARAD. Marks Polarized Corporation. SN 273,295. Pub. 5-28-68. Filed 6-7-67.

854,549. HIPOTRONICS. Hipotronics, Inc. MULTIPLE CLASS (Classes 21 and 26). SN 273,776. Pub. 5-28-68. Filed 6-13-67.

854,550. MISCELLANEOUS DESIGN. Sigma-Netics, Inc. SN 274,247. Pub. 5-28-68. Filed 6-19-67.

854,551. ELO-PILOT. Elox Inc., assignee of Elox Corporation. SN 276,112. Pub. 5-28-68. Filed 7-17-67.

854,552. KATONE AND DESIGN. Katone Corporation. SN 276,840. Pub. 5-28-68. Filed 7-26-67.

854,553. OKOGUARD. The Okonite Company. SN 277,702. Pub. 5-28-68. Filed 8-7-67.

854,554. ALUMAGARD. Superior Continental Corporation, by change of name from Superior Cable Corporation. SN 277,728. Pub. 5-28-68. Filed 8-7-67.

854,555. ROTAXIAL. Columbia Wire Products Company. SN 277,822. Pub. 5-28-68. Filed 8-8-67.

854,556. CENTI-LOC. International Telephone and Telegraph Corporation (Delaware corporation), by merger and change of name from International Telephone and Telegraph Corporation (Maryland corporation). SN 278,801. Pub. 5-28-68. Filed 8-22-67.

854,557. DE-K TECTOR. Heath, Inc. SN 279,647. Pub. 5-28-68. Filed 9-5-67.

854,558. CONTAX. International Telephone and Telegraph Corporation, by assignment, merger, and change of name from Jasper Blackburn Corporation. SN 283,856. Pub. 5-28-68. Filed 11-1-67.

Class 22 — Games, Toys, and Sporting Goods

854,531. (See Class 19 for this trademark.)

854,559. CHILDREN'S BARGAIN TOWN U.S.A. AND DESIGN. Children's Bargain Town U.S.A., Inc. SN 272,259. Pub. 5-28-68. Filed 5-24-67.

854,560. TOM THUMB. Western Stamping Corporation. SN 275,403. Pub. 5-28-68. Filed 7-5-67.

854,561. COLD CLAD. Doughboy Industries, Inc. SN 279,814. Pub. 5-28-68. Filed 9-7-67.

854,562. 3 BLIND MICE. Lakeside Industries, Inc. SN 284,376. Pub. 5-28-68. Filed 11-8-67.

Class 23 — Cutlery, Machinery, and Tools, and Parts Thereof

854,481. (See Class 13 for this trademark.)

854,487. (See Class 13 for this trademark.)

854,533. (See Class 19 for this trademark.)

854,563. GOLD BOND. Samuel Bingham Company. SN 243,630. Pub. 2-13-68. Filed 4-18-66.

854,564. ELECTR-O. Electro Engineering Products Co., Inc. SN 246,668. Pub. 5-28-68. Filed 5-26-66.

854,565. MISCELLANEOUS DESIGN. Pyro Foam Corp., assignee of Bramley Barnes. SN 251,599. Pub. 5-28-68. Filed 8-3-66.

854,566. ABRAS-I-JECTOR. Partek Corporation. SN 254,798. Pub. 5-28-68. Filed 9-20-66.

854,567. LAVOFLUX. Societe Grenobloise d'Etudes et d'Applications Hydrauliques (Sogreah). SN 255,363. Pub. 5-28-68. Filed 9-28-66.

854,568. TREE MASTER. Selma Trailer & Manufacturing Co. SN 259,585. Pub. 5-28-68. Filed 11-28-66.

854,569. POWERS-GROVER TRANSITUBES. The Powers Regulator Company. SN 262,346. Pub. 5-28-68. Filed 1-11-67.

854,570. T/C. Thomson Industries, Inc. SN 262,721. Pub. 11-28-67. Filed 1-17-67.

854,571. FLUFF'R. Speed Clean, Inc. SN 271,539. Pub. 5-28-68. Filed 5-15-67.

854,572. DRAG-KLEEN. Stone Conveyor Co., Inc. SN 271,655. Pub. 5-28-68. Filed 5-16-67.

854,573. PPP AND DESIGN. Walker Manufacturing Company. SN 273,815. Pub. 5-28-68. Filed 6-13-67.

854,574. PREMIER. The National Ideal Company. SN 274,230. Pub. 5-28-68. Filed 6-19-67.

854,575. MAT-TRAC. Nu-Way Manufacturing Company, Inc. SN 274,759. Pub. 5-28-68. Filed 6-26-67.

854,576. ROTA FORG. Rota Forg Corporation. SN 274,895. Pub. 5-28-68. Filed 6-27-67.

854,577. SPRINGFLEX. Rex Chainbelt Inc. SN 276,176. Pub. 5-28-68. Filed 7-17-67.

854,578. SUNDSTRAND JIGMATIC. Sundstrand Corporation. SN 276,367. Pub. 5-28-68. Filed 7-19-67.

854,579. PURIPAK. Westinghouse Electric Corporation. SN 276,976. Pub. 5-28-68. Filed 7-27-67.

854,580. SUNDSTRAND AND S DESIGN. Sundstrand Corporation. SN 277,083. Pub. 5-28-68. Filed 7-28-67.

854,581. SWIVEL-SWIRL. Frank V. Scigliano. SN 277,712. Pub. 5-28-68. Filed 8-7-67.

854,582. HEIL-PAC. The Heil Co. SN 277,835. Pub. 5-28-68. Filed 8-8-67.

854,583. MULTISERT. Essington Manufacturing Co. Inc. SN 278,789. Pub. 5-28-68. Filed 8-22-67.

854,584. MISCELLANEOUS DESIGN. Kabushiki Kaisha Tanaka-Kameshichi-Kojo. SN 280,169. Pub. 5-28-68. Filed 9-12-67.

854,585. K MART AND DESIGN. S. S. Kresge Company. SN 282,105. Pub. 5-28-68. Filed 10-9-67.

854,586. SAF-T-BOOM. Saf-T-Boom, Inc. SN 289,534. Pub. 5-28-68. Filed 1-24-68.

Class 24 — Laundry Appliances and Machines

854,587. MODERNAID. E. L. Mustee & Sons, Inc., d.b.a. Modernaid Company. SN 283,270. Pub. 5-28-68. Filed 10-24-67.

Class 25 — Locks and Safes

854,588. DATA SS GARD. Schwab Safe Co., Inc. SN 276,588. Pub. 5-28-68. Filed 7-21-67.

Class 26 — Measuring and Scientific Appliances

854,549. (See Class 21 for this trademark.)

854,589. 720. Xerox Corporation. SN 239,848. Pub. 5-28-68. Filed 2-28-66.

854,590. LITE-GARD. Univis, Inc. SN 248,270. Pub. 5-28-68. Filed 6-16-66.

854,591. METRASTAR. Metrawatt Aktiengesellschaft. SN 248,923. Pub. 5-28-68. Filed 6-24-66.

854,592. MINOLTA. Minolta Camera Kabushiki Kaisha. SN 252,869. Pub. 5-28-68. Filed 8-22-66.

854,593. MCBEE '360'. Litton Business Systems, Inc., by merger and change of name from Royal Typewriter Company, Inc. SN 255,647. Pub. 5-28-68. Filed 10-3-66.

854,594. MINICUBE. AB Autokemi. SN 256,512. Pub. 5-28-68. Filed 10-17-66.

854,595. REPEAT-O-METER. Rahn Granite Surface Plate Co. SN 264,101. Pub. 5-28-68. Filed 2-6-67.

854,596. METZ AND DESIGN. Johnson and Company, Importers. SN 265,307. Pub. 1-23-68. Filed 2-23-67.

854,597. DENSI-TIMER. Lektra Laboratories, Inc. SN 270,928. Pub. 5-28-68. Filed 5-8-67.

854,598. ROYFAX. Litton Business Systems, Inc., by change of name from Monroe International, Inc. SN 275,385. Pub. 5-28-68. Filed 7-5-67.

854,599. AUTOTITER. Astec, Incorporated. SN 277,337. Pub. 5-28-68. Filed 8-2-67.

854,600. EKOLINE 12. Smith Kline & French Laboratories. SN 278,319. Pub. 5-28-68. Filed 8-15-67.

854,601. H AND GLOBE DESIGN. Hanimex Pty. Limited. SN 287,546. Pub. 5-28-68. Filed 12-26-67.

854,602. HANIMEX. Hanimex Pty. Limited. SN 287,549. Pub. 5-28-68. Filed 12-26-67.

Class 28 — Jewelry and Precious-Metal Ware

854,418. (See Class 3 for this trademark.)

854,603. CASA GRANDE. Oneida Ltd. SN 271,278. Pub. 5-28-68. Filed 5-11-67.

854,604. PRIX DE PERLE. Marvella, Inc. SN 278,809. Pub. 5-28-68. Filed 8-22-67.

854,605. PINCH-ME NOTS. Coro, Inc. SN 282,890. Pub. 5-28-68. Filed 10-19-67.

Class 29 — Brooms, Brushes, and Dusters

854,606. PERFEX. Johnson & Johnson. SN 266,637. Pub. 5-28-68. Filed 3-14-67.

Class 31 — Filters and Refrigerators

854,405. (See Class 2 for this trademark.)

854,607. KING WORTH ITS WEIGHT IN COLD. King Refrigerator Corporation. SN 277,052. Pub. 5-28-68. Filed 7-28-67.

Class 32 — Furniture and Upholstery

854,405. (See Class 2 for this trademark.)

854,608. PLANNER GROUP. B. G. Mesberg Corp. SN 270,689. Pub. 5-28-68. Filed 5-4-67.

854,609. DESIGNER'S DREAM HARDWOOD KITCHENS AND DESIGN. Lyle Yoder, d.b.a. Yoder Cabinet Company. SN 280,832. Pub. 5-28-68. Filed 9-20-67.

854,610. EKAFORM. Möbelfabriken Ernst Kaufmann KG. SN 280,962. Pub. 5-28-68. Filed 9-22-67.

854,611. LATOFOAM. Dayco Corporation. SN 289,978. Pub. 5-28-68. Filed 1-31-68.

Class 34 — Heating, Lighting, and Ventilating Apparatus

854,405. (See Class 2 for this trademark.)

854,612. PINCH ARC. Teledyne, Inc. SN 258,612. Pub. 5-28-68. Filed 11-14-66.

854,613. ACROTRON. Aero Welder Mfg. Co. SN 265,256. Pub. 3-26-68. Filed 2-23-67.

854,614. BD AND DESIGN. Nordson Corporation. SN 267,543. Pub. 5-28-68. Filed 3-24-67.

854,615. ROTO-FLEX. James N. Martin, Jr., d.b.a. Best Equipment & Supply Co. SN 271,161. Pub. 5-28-68. Filed 4-5-68.

854,616. GLYMMY. Paul Voltaire, d.b.a. Paul Voltaire's Contemporary Shop. SN 271,298. Pub. 5-28-68. Filed 5-11-67.

854,617. POLAR PAL. The Coleman Company, Inc. SN 276,535. Pub. 5-28-68. Filed 7-21-67.

Class 35 — Belting, Hose, Machinery Packing, and Nonmetallic Tires

854,618. MOHAWK MONTEGA. The Mohawk Rubber Company. SN 269,331. Pub. 5-28-68. Filed 4-17-67.

854,619. XPT. Louis Fishman & Co. Inc. SN 280,041. Pub. 5-28-68. Filed 9-11-67.

Class 36 — Musical Instruments and Supplies

854,545. (See Class 21 for this trademark.)

854,620. LINGUATAPE. Linguaphone Institute Limited. SN 235,569. Pub. 5-28-68. Filed 12-30-65.

854,621. EW3. Grundig Werke GmbH. SN 263,566. Pub. 5-28-68. Filed 1-30-67.

854,622. VERNE. Bernardo Herger. SN 264,930. Pub. 5-28-68. Filed 2-17-67.

854,623. BRAND FIVE. Robins Industries Corp. SN 269,105. Pub. 5-28-68. Filed 4-13-67.

854,624. MOUNTAIN DEW. Synthetic Plastics Company. SN 272,324. Pub. 5-28-68. Filed 5-19-67.

854,625. DERAM. Decca Limited. SN 276,232. Pub. 5-28-68. Filed 7-18-67.

854,626. JEBBRATONIC. Ronald George Dandar, d.b.a. Jebbratonic Records. SN 286,236. Pub. 5-28-68. Filed 12-5-67.

Class 37 — Paper and Stationery

854,627. AMERICAN HOSPITAL SUPPLY A AND DESIGN. American Hospital Supply Corporation. SN 259,792. Pub. 5-28-68. Filed 12-1-66.

854,628. QUICKI-DEX. National Blank Book Company, Inc. SN 274,530. Pub. 5-28-68. Filed 6-22-67.

854,629. RED SNAPPER. National Blank Book Company, Inc. SN 274,531. Pub. 5-28-68. Filed 6-22-67.

854,630. M.O.D. The Mead Corporation. SN 276,153. Pub. 5-28-68. Filed 7-17-67.

854,631. ALUMI-PAK. Hamersley Paper Mills, Inc. SN 276,663. Pub. 4-9-68. Filed 7-24-67.

854,432. CLEAR-SIX. Reynolds Metals Company. SN 279,567. Pub. 5-28-68. Filed 9-1-67.

854,633. SHADE. Shade Business Forms Inc. SN 279,572. Pub. 5-28-68. Filed 9-1-67.

854,634. CALFSKIN. Kimberly-Clark Corporation. SN 279,839. Pub. 5-28-68. Filed 9-7-67.

854,635. SUNLAND. Sun-Maid Raisin Growers of California. SN 279,965. Pub. 5-28-68. Filed 9-8-67.

854,636. TINTINNABULATION. Lindy Pen Company, Incorporated. SN 280,074. Pub. 5-28-68. Filed 9-11-67.

854,637. HAMMERMILL SAVINGS MIMEOGRAPH. Hammermill Paper Company. SN 282,581. Pub. 5-28-68. Filed 10-16-67.

854,638. HAMMERMILL SAVINGS DUPLICATOR. Hammermill Paper Company. SN 282,582. Pub. 5-28-68. Filed 10-16-67.

Class 38 — Prints and Publications

854,639. THE H LINE. Becton, Dickinson and Company. SN 254,369. Pub. 5-28-68. Filed 9-13-66.

854,640. CONCEPT. Mepco, Inc. SN 257,502. Pub. 5-28-68. Filed 10-28-66.

854,641. NEW YORK MOTOR EXPRESS GUIDE. The Shippers Guide Company. SN 258,842. Pub. 5-28-68. Filed 11-16-66.

854,642. YOUR TAXES. Oregon Tax Research. SN 259,757. Pub. 5-28-68. Filed 11-30-66.

854,643. EXPERIENCES IN SCIENCE AND DESIGN. McGraw-Hill, Inc. SN 264,880. Pub. 7-25-67. Filed 2-17-67.

854,644. POSTER-CARD. Personality Posters, Inc. SN 265,099. Pub. 5-28-68. Filed 2-20-67.

854,645. SPCE ORGANIZER-FOLIO. Sports Picture Cards Enterprises, Inc. SN 267,991. Pub. 5-28-68. Filed 3-30-67.

854,646. WALLACES FARMER. Wallace-Homestead Co. SN 270,828. Pub. 5-28-68. Filed 5-5-67.

854,647. THE FULLERETTE. The Fuller Brush Company. SN 272,482. Pub. 5-28-68. Filed 5-26-67.

854,648. OMARO AND DESIGN. Omaro Société Anonyme. SN 273,786. Pub. 5-28-68. Filed 6-13-67.

854,649. C & P NEWS. The Chesapeake and Potomac Telephone Company. SN 273,945. Pub. 5-28-68. Filed 6-15-67.

854,650. THE SACRAMENTO UNION. The Sacramento Union Corporation. SN 273,989. Pub. 5-28-68. Filed 6-15-67.

854,651. THE TIMES RECORD. The Troy Record Company. SN 274,266. Pub. 5-28-68. Filed 6-19-67.

854,652. HI AND DESIGN. Amberley Greeting Card Co. SN 275,213. Pub. 5-28-68. Filed 7-3-67.

854,653. DUBL'-TAKE. Joe Slovacek, d.b.a. Dubl'-Take Greetings. SN 275,307. Pub. 5-28-68. Filed 7-3-67.

854,654. NIGHT OWL AND DESIGN. Nightowl Publications, Inc. SN 275,389. Pub. 5-28-68. Filed 7-5-67.

854,655. CAPTAIN AMERICA. Magazine Management Company, d.b.a. Marvel Comics Group. SN 278,016. Pub. 5-28-68. Filed 8-10-67.

854,656. REY SCOTT. Reynolds G. Scott, d.b.a. Rey Scott. SN 280,099. Pub. 5-28-68. Filed 9-11-67.

Class 39 — Clothing

854,418. (See Class 3 for this trademark.)

854,657. CHERRIE. Coast Empire, Inc., assignee of C. W. Anderson Hosiery Company. SN 236,347. Pub. 9-20-66. Filed 1-13-66.

854,658. INOVATION MIRACUL-PREST AND DESIGN. Meyer-Mueller-Goodman Company, Inc. SN 237,725. Pub. 5-28-68. Filed 2-1-66.

854,659. TRADE WINDS BY TAILORBROOKE. Tailorbrooke Clothes, Inc. SN 242,680. Pub. 5-28-68. Filed 4-4-66.

854,660. SLIMS BY LORD ASHLEY. Lord Ashley, Ltd. SN 246,579. Pub. 5-28-68. Filed 5-25-66.

854,661. MAN OF FASHION. Neuville & Co., Inc. SN 255,713. Pub. 5-28-68. Filed 10-4-66.

854,662. LITE WHITES. Style Footwear Co., Inc. SN 261,531. Pub. 5-28-68. Filed 12-27-66.

854,663. PENNY ROSS. Spartans Industries Inc. SN 262,631. Pub. 5-28-68. Filed 1-16-67.

854,664. PEGGY ROSS. Spartans Industries Inc. SN 262,632. Pub. 5-28-68. Filed 1-16-67.

854,665. CAMERON. Stedman Manufacturing Company. SN 262,717. Pub. 5-28-68. Filed 1-17-67.

854,666. ROCK HARBOR. Fred'k H. Sprague Co., Inc. SN 263,702. Pub. 5-28-68. Filed 1-31-67.

854,667. GRIPSLYDE. One-In-Hand, Inc. SN 264,226. Pub. 5-28-68. Filed 2-8-67.

854,668. SILKIES AND DESIGN. Jaime Pujol. SN 267,545. Pub. 5-28-68. Filed 3-24-67.

854,669. CARESSA FLAPPERS. Caressa, Inc. SN 267,610. Pub. 5-28-68. Filed 3-27-67.

854,670. PHY-ED. Phy-Ed Apparel Service, Inc. MULTIPLE CLASS (Classes 39 and 51). SN 270,453. Pub. 5-28-68. Filed 5-2-67.

854,671. ACHIEVER. Wembley, Inc. SN 272,769. Pub. 5-28-68. Filed 5-31-67.

854,672. APRO-HOOD. Hazel Ransom-Potts, d.b.a. Hazel-Sylvia. SN 273,677. Pub. 5-28-68. Filed 6-12-67.

854,673. TRELAINE. Toby Lane, Inc. SN 276,188. Pub. 5-28-68. Filed 7-17-67.

854,674. JEAN PATOU. Jean Patou, Societe Anonyme. SN 276,345. Pub. 5-28-68. Filed 7-19-67.

854,675. SEA & SKI. Sea & Ski Corporation. SN 276,358. Pub. 5-28-68. Filed 7-19-67.

854,676. CORONET (DESIGN). Countess Mara, Inc. SN 276,415. Pub. 5-28-68. Filed 7-20-67.

854,677. SALTY DOG. Canton Textile Mills, Inc. SN 276,640. Pub. 5-28-68. Filed 7-24-67.

854,678. BOAT-SUNS. Endicott Johnson Corporation. SN 277,035. Pub. 5-28-68. Filed 7-28-67.

854,679. SEADOGS. Gold Seal Rubber Company. SN 277,042. Pub. 5-28-68. Filed 7-28-67.

854,680. COBBIES. The United States Shoe Corporation. SN 277,231. Pub. 5-28-68. Filed 7-31-67.

854,681. JACK CLARKE. J. N. Clarke Limited. SN 277,265. Pub. 5-28-68. Filed 8-1-67.

854,682. CHERI LAMB. Cheri Lamb Incorporated. SN 278,667. Pub. 5-28-68. Filed 8-21-67.

854,683. CLAYBAR. Claybar of California, Inc. SN 279,050. Pub. 5-28-68. Filed 8-25-67.

854,684. BOATER TWILL. Palm Beach Company. SN 279,214. Pub. 5-28-68. Filed 8-28-67.

854,685. L'ESCARGOT. Drummond Knitwear Ltd. SN 280,936. Pub. 5-28-68. Filed 9-22-67.

854,686. BONNEVILLE. Pendleton Woolen Mills. SN 283,357. Pub. 5-28-68. Filed 10-25-67.

854,687. ALERT. Joyce, Inc. SN 283,804. Pub. 5-28-68. Filed 10-31-67.

854,688. BLOSSOM OUT. Teenform, Inc. SN 287,183. Pub. 5-28-68. Filed 12-18-67.

854,689. STORM SHIELD. North Land Mfg., Ltd. SN 287,700. Pub. 5-28-68. Filed 12-28-67.

854,690. DESIGN OF AN IMP. Littonian Shoe Co. SN 288,021. Pub. 5-28-68. Filed 1-3-68.

854,691. DON JILLETTE. Don Sophisticates, Inc. SN 288,497. Pub. 5-28-68. Filed 1-10-68.

854,692. NPC. New Process Company. SN 289,415. Pub. 5-28-68. Filed 1-23-68.

854,693. LEE-PREST. The H. D. Lee Company, Incorporated. SN 290,626. Pub. 5-28-68. Filed 2-8-68.

854,694. THE OUTSIDE-INS. Maidenform, Inc. SN 291,555. Pub. 5-28-68. Filed 2-21-68.

854,695. ARIETTE. Maidenform, Inc. SN 291,558. Pub. 5-28-68. Filed 2-21-68.

854,696. THE TOTALLY TERRIFICS. Maidenform, Inc. SN 291,672. Pub. 5-28-68. Filed 2-23-68.

854,697. DEFINITION. Maidenform, Inc. SN 291,946. Pub. 5-28-68. Filed 2-27-68.

854,698. BEGUILEMENT. Maidenform, Inc. SN 291,947. Pub. 5-28-68. Filed 2-27-68.

854,699. STITCH'N TAME. Maidenform, Inc. SN 291,948. Pub. 5-28-68. Filed 2-27-68.

854,700. THE GLOW-TOGETHERS. Maidenform, Inc. SN 291,949. Pub. 5-28-68. Filed 2-27-68.

854,701. CAMOUFLAGE. Maidenform, Inc. SN 291,950. Pub. 5-28-68. Filed 2-27-68.

854,702. ONCE OVER LIGHTLY. Maidenform, Inc. SN 291,951. Pub. 5-28-68. Filed 2-27-68.

854,703. ROOSTER (DESIGN). Eloesser-Heynemann Company. SN 292,533. Pub. 5-28-68. Filed 3-6-68.

Class 40 — Fancy Goods, Furnishings, and Notions

854,704. THE FLIC-ONS. Yardley of London, Inc. SN 282,852. Pub. 5-28-68. Filed 10-18-67.

Class 42 — Knitted, Netted, and Textile Fabrics, and Substitutes Therefor

854,705. SATALENE. Kayser-Roth Corporation, assignee of Western Textile Co. Inc. SN 266,976. Pub. 5-30-67. Filed 3-17-67.

854,706. K I M L O N. Kimberly-Clark Corporation. SN 272,731. Pub. 5-28-68. Filed 5-31-67.

854,707. FORTIMEAU. Fieldcrest Mills, Inc. SN 277,647. Pub. 5-28-68. Filed 8-7-67.

854,708. YEAROUND. Morris Lindenberg, d.b.a. Linrose Fabrics Co. SN 277,841. Pub. 5-28-68. Filed 8-8-67.

854,709. GLASGARD. J. P. Stevens & Co., Inc. SN 280,273. Pub. 5-28-68. Filed 9-13-67.

854,710. TRUK-TEX. Borg-Warner Corporation, assignee of Borg-Warner Corporation. SN 282,043. Pub. 5-28-68. Filed 10-9-67.

854,711. POLARIS. Chatham Manufacturing Company. SN 282,057. Pub. 5-28-68. Filed 10-9-67.

854,712. ISLAND PARK. Burlington Industries, Inc. SN 282,282. Pub. 5-28-68. Filed 10-11-67.

854,713. LAUREL RIDGE. Burlington Industries, Inc. SN 282,283. Pub. 5-28-68. Filed 10-11-67.

854,714. SUPER STAR. Burlington Industries, Inc. SN 282,285. Pub. 5-28-68. Filed 10-11-67.

854,715. SABRE AND DESIGN. Sabre Carpets, Inc. SN 282,300. Pub. 5-28-68. Filed 10-11-67.

854,716. ACROTHERM. Burlington Industries, Inc. SN 282,434. Pub. 5-28-68. Filed 10-13-67.

854,717. THERMACOAT. Burlington Industries, Inc. SN 282,435. Pub. 5-28-68. Filed 10-13-67.

854,718. ROYAL HOUSEHOLD. Cannon Mills Company. SN 282,540. Pub. 5-28-68. Filed 10-16-67.

854,719. NORTHLON. Chatham Manufacturing Company. SN 283,098. Pub. 5-28-68. Filed 10-23-67.

854,720. CRAFT-NET. The Craft-Net Corporation. SN 283,430. Pub. 5-28-68. Filed 10-26-67.

854,721. TASHMAL AND DESIGN. Roger Laviale, Ltd. SN 283,674. Pub. 5-28-68. Filed 10-30-67.

Class 43 — Thread and Yarn

854,722. LANO LOFT. Greenwood Mills, Inc. SN 279,644. Pub. 5-28-68. Filed 9-5-67.

854,723. LIBERTY. The American Thread Company. SN 282,874. Pub. 5-28-68. Filed 10-19-67.

Class 44 — Dental, Medical, and Surgical Appliances

854,724. CAVACATH. Deseret Pharmaceutical Company, Inc. SN 281,780. Pub. 5-28-68. Filed 10-4-67.

854,725. ECONOCATH. Deseret Pharmaceutical Company, Inc. SN 281,781. Pub. 5-28-68. Filed 10-4-67.

854,726. INSEMICATH. Deseret Pharmaceutical Company, Inc. SN 281,782. Pub. 5-28-68. Filed 10-4-67.

854,727. INSERTICATH. Deseret Pharmaceutical Company, Inc. SN 281,872. Pub. 5-28-68. Filed 10-5-67.

Class 45 — Soft Drinks and Carbonated Waters

854,728. THE BOMB. The Southland Corporation. SN 261,332. Pub. 5-28-68. Filed 12-22-66.

854,729. GRIN·ADE. Beatrice Foods Co. SN 275,824. Pub. 5-28-68. Filed 7-12-67.

854,730. MOTHER GOOSE. J. F. Lazier Manufacturing Co. SN 280,789. Pub. 5-28-68. Filed 9-20-67.

Class 46 — Foods and Ingredients of Foods

854,731. GOLDFINGERS. W. R. Grace & Co., assignee of Leaf Brands, Inc. SN 212,787. Pub. 4-5-66. Filed 2-25-65.

854,732. RANGETTE ETC. AND DESIGN. J. D. Jewell, Inc. SN 234,036. Pub. 5-28-68. Filed 12-6-65.

854,733. LA PREFERIDA. La Preferida, Inc. SN 238,750. Pub. 5-28-68. Filed 2-14-66.

854,734. CAFOLA. Suchard Holding Societe Anonyme. SN 243,037. Pub. 5-28-68. Filed 4-8-66.

854,735. SUNBEAM MISS SUNBEAM AND DESIGN. Quality Bakers of America Cooperative, Inc. SN 245,758. COLLECTIVE MARK. Pub. 5-28-68. Filed 5-16-66.

854,736. F AND DESIGN. Foster Beef Company, d.b.a. Foster's of Manchester. SN 247,116. Pub. 5-28-68. Filed 6-2-66.

854,737. TASTE-A-TREAT. Utah Fruit Products Co. SN 248,377. Pub. 5-28-68. Filed 6-17-66.

854,738. NUTRITIONAL FOODS AND DESIGN. Plus Products, d.b.a. Nutritional Foods Co. SN 259,846. Pub. 5-28-68. Filed 12-1-66.

"854,739. KING'S TABLE. Super Food Services, Inc., assignee of Mike Hure & Sons, d.b.a. M. Hure & Sons. SN 261,777. Pub. 3-28-67. Filed 1-3-67.

854,740. 40 FATHOMS AND DESIGN. 40-Fathom Seafoods, Inc. SN 262,780. Pub. 4-9-68. Filed 1-18-67.

854,741. HOKEY POKUS. National Biscuit Company. SN 262,878. Pub. 5-28-68. Filed 1-19-67.

854,742. MATEY. R.G.B. Laboratories, Inc. SN 264,241. Pub. 5-28-68. Filed 2-8-67.

854,743. NSP NATIONAL SEA PRODUCTS SYMBOL OF QUALITY AND DESIGN. National Sea Products Limited, by merger from National Sea Products Limited. SN 264,845. Pub. 5-28-68. Filed 2-16-67.

854,744. MARINE HOST. Canteen Corporation. SN 265,981. Pub. 5-28-68. Filed 3-6-67.

854,745. BIOFERM. International Minerals & Chemical Corporation. SN 267,884. Pub. 5-28-68. Filed 3-30-67.

854,746. RICHTONE. SCM Corporation, assignee of The Glidden Company, d.b.a. Durkee Famous Foods. SN 269,423. Pub. 5-28-68. Filed 4-18-67.

854,747. SHAKE-O'-BEEF. Bovril (Canada) Limited. SN 269,968. Pub. 5-28-68. Filed 4-25-67.

854,748. SEGO. Pet Incorporated. SN 270,268. Pub. 5-28-68. Filed 4-28-67.

854,749. COWPOKES. Cudahy Company. SN 272,540. Pub. 5-28-68. Filed 5-29-67.

854,750. BASSETT'S AND DESIGN. Geo. Bassett & Co. Limited. SN 272,797. Pub. 5-28-68. Filed 6-1-67.

854,751. INITOL. Mar-Ko Company. SN 273,293. Pub. 5-28-68. Filed 6-7-67.

854,752. ANOREK. Mar-Ko Company. SN 273,294. Pub. 5-28-68. Filed 6-7-67.

854,753. CAP'N JOHN'S AND DESIGN. The Great Atlantic & Pacific Tea Company, Inc. SN 273,635. Pub. 5-28-68. Filed 6-12-67.

854,754. PRONTO AND DESIGN. Pronto Food Corporation. SN 274,459. Pub. 5-28-68. Filed 6-21-67.

854,755. ALMOND HILL. Candymasters Incorporated, assignee of F & F Laboratories, Inc. SN 274,507. Pub. 5-28-68. Filed 6-22-67.

854,756. WALNUT HILL. Candymasters Incorporated, assignee of F & F Laboratories, Inc. SN 274,509. Pub. 5-28-68. Filed 6-22-67.

854,757. HERMITAGE. The E. M. Todd Company. SN 274,548. Pub. 5-28-68. Filed 6-22-67.

854,758. MISCELLANEOUS DESIGN. Don's Chuck Wagon Products, Inc. SN 274,593. Pub. 5-28-68. Filed 6-23-67.

854,759. SALTA. Diamond Crystal Salt Company. SN 278,673. Pub. 3-5-68. Filed 8-21-67.

854,760. FF (DESIGN). Favorite Foods, Inc. SN 278,889. Pub. 5-28-68. Filed 8-23-67.

854,761. SEXTON AND DESIGN. John Sexton & Co. SN 278,911. Pub. 5-28-68. Filed 8-23-67.

854,762. HONEY-KINS. Beatrice Foods Co. SN 279,015. Pub. 5-28-68. Filed 8-22-67.

854,763. CAMARO. National Biscuit Company. SN 279,316. Pub. 5-28-68. Filed 8-29-67.

854,764. ODYSSEY. National Biscuit Company. SN 279,317. Pub. 5-28-68. Filed 8-29-67.

854,765. AQUA DIET AND FISH DESIGN. Aquarium Foods Ltd. SN 279,354. Pub. 5-28-68. Filed 8-30-67.

854,766. WHO AM I? Topps Chewing Gum, Incorporated. SN 279,876. Pub. 5-28-68. Filed 9-7-67.

854,767. SO BIGS. Gerber Products Company. SN 279,940. Pub. 5-28-68. Filed 9-8-67.

854,768. "NUTSY NAUT" AND DESIGN. National Biscuit Company. SN 280,721. Pub. 5-28-68. Filed 9-19-67.

854,769. TABLE JOY. L. and S. Packing Co., Inc. SN 281,296. Pub. 5-28-68. Filed 9-27-67.

854,770. EVANIZED. Cape Fear Feed Products, Inc. SN 282,175. Pub. 5-28-68. Filed 10-10-67.

854,771. ISLAND MAID. Edwin W. A. Cheng, d.b.a. Exotic Foods Company. SN 283,225. Pub. 5-28-68. Filed 10-24-67.

854,772. GOOD BOY. Armitage Brothers Limited. SN 283,315. Pub. 5-28-68. Filed 10-25-67.

854,773. CHESWICK. Foremost-McKesson, Inc. SN 283,439. Pub. 5-28-68. Filed 10-26-67.

854,774. ADELAIDES. Russell Stover Candies, Inc. SN 283,714. Pub. 5-28-68. Filed 10-30-67.

854,775. AM PM AND DESIGN. Duffy-Mott Company, Inc. SN 283,782. Pub. 5-28-68. Filed 10-31-67.

854,776. KAY. National Dairy Products Corporation. SN 283,920. Pub. 5-28-68. Filed 11-1-67.

854,777. JACKPOT. Topps Chewing Gum, Incorporated. SN 283,943. Pub. 5-28-68. Filed 11-1-67.

854,778. STAR GOLD. North Star Dairy. SN 284,229. Pub. 5-28-68. Filed 11-6-67.

854,779. HOOD AND DESIGN. H. P. Hood & Sons, Inc., d.b.a. H. P. Hood & Sons. SN 284,306. Pub. 5-28-68. Filed 11-7-67.

854,780. BIG SHOT. American Chewing Products Corporation. SN 284,420. Pub. 1-16-68. Filed 11-9-67.

854,781. STAR-DRI. A. E. Staley Manufacturing Company. SN 284,509. Pub. 5-28-68. Filed 11-9-67.

854,782. DESIGN OF AN INDIAN STANDING BY A FIRE WITH A POT IN HIS HAND. Golden Kernel, Inc. SN 284,651. Pub. 5-28-68. Filed 11-13-67.

854,783. BROADWAY. The Graham Co., Inc. SN 284,653. Pub. 5-28-68. Filed 11-13-67.

854,784. TAK·A·TACO AND DESIGN. Tak-A-Taco, Inc. SN 285,377. Pub. 5-28-68. Filed 11-22-67.

854,785. HIGH CHIEF AND DESIGN. King Kullen Grocery Co., Inc. SN 285,700. Pub. 5-28-68. Filed 11-28-67.

854,786. WATER MAID. Riviana Foods Inc. SN 285,767. Pub. 5-28-68. Filed 11-28-67.

854,787. SAU-SEA. Sau-Sea Foods, Inc. SN 286,039. Pub. 5-28-68. Filed 12-1-67.

854,788. LONE EAGLE. Exeter Fruit Association. SN 289,747. Pub. 5-28-68. Filed 1-29-68.

854,789. RABINOWITZ'S R ETC. AND DESIGN. Paramount Poultry, Inc. SN 290,695. Pub. 5-28-68. Filed 2-9-68.

854,790. ON-THE-GO. General Mills, Inc. SN 291,940. Pub. 5-28-68. Filed 2-27-68.

854,791. MR. CRISPS. General Mills, Inc. SN 291,942. Pub. 5-28-68. Filed 2-27-68.

854,792. TIDE-ME-OVER. General Mills, Inc. SN 291,943. Pub. 5-28-68. Filed 2-27-68.

854,793. DYNAMO. General Mills, Inc. SN 291,944. Pub. 5-28-68. Filed 2-27-68.

854,794. COUNTRY FIXIN'S. Kellogg Company. SN 292,158. Pub. 5-28-68. Filed 2-29-68.

854,795. KETCHARD. Frieda A. Harris, d.b.a. The Ketchard Kitchens. SN 292,691. Pub. 5-28-68. Filed 3-7-68.

Class 47 — Wines

854,796. DELICIOUS POLISH HONEY DRINK "STAROPOLSKI" AND DESIGN. Przedsiebiorstwo Handlu Zagranicznego "Argos". SN 266,583. Pub. 5-28-68. Filed 3-13-67.

854,797. NADWISLANSKI AND DESIGN. Przedsiebiorstwo Handlu Zagranicznego "Argos." SN 266,584. Pub. 5-28-68. Filed 3-13-67.

854,798. NADWISLANSKI AND DESIGN. Przedsiebiorstwo Handlu Zagranicznego "Argos." SN 266,585. Pub. 5-28-68. Filed 3-13-67.

854,799. STAROPOLSKI AND DESIGN. Przedsiebiorstwo Handlu Zagranicznego "Argos." SN 266,586. Pub. 5-28-68. Filed 3-13-67.

854,800. MOET. Chandon Champagne Corporation. SN 275,744. Pub. 5-28-68. Filed 7-11-67.

854,801. RUFFINO AND BOTTLE DESIGN. Societa per Azioni Chianti Ruffino Exportazione Vinicola Toscana. SN 278,429. Pub. 5-28-68. Filed 8-16-67.

854,802. GALLO LIVINGSTON CREAM AND DESIGN. E. & J. Gallo Winery, d.b.a. Gallo Vineyards. SN 289,943. Pub. 5-28-68. Filed 1-31-68.

Class 49 — Distilled Alcoholic Liquors

854,803. MAZARINE. Cusenier (Societe Anonyme de la Grande Distillerie E. Cusenier Fils Aine et Compagnie). SN 277,268. Pub. 5-28-68. Filed 8-1-67.

854,804. FABULOSO. Palomino & Vergara. SN 288,228. Pub. 5-28-68. Filed 1-5-68.

Class 50 — Merchandise Not Otherwise Classified

854,805. HART AND DESIGN. H. W. Hart Mfg. Co. SN 251,724. Pub. 5-28-68. Filed 8-4-66.

854,806. BALL. Ball Brothers Company Incorporated. SN 262,755. Pub. 5-28-68. Filed 1-18-67.

854,807. ACTIN-A-PLATE. Fairchild Camera and Instrument Corporation. SN 267,138. Pub. 5-28-68. Filed 3-20-67.

854,808. DURA-LIFE. Sioux Steel Company. SN 272,520. Pub. 5-28-68. Filed 5-26-67.

854,809. MISCELLANEOUS DESIGN. Utley Procelains, Ltd. SN 276,776. Pub. 5-28-68. Filed 7-25-67.

854,810. DRUMCEL. Strecton Industries, Incorporated. SN 277,311. Pub. 5-28-68. Filed 8-1-67.

854,811. KWIK-PAK. George E. Belcher Company. SN 280,756. Pub. 5-28-68. Filed 9-20-67.

854,812. DISKIT. Gilbert Lincoln. SN 283,960. Pub. 5-28-68. Filed 11-2-67.

854,813. SATIN-SHEEN. Pyramid Mills Co. Inc. SN 286,774. Pub. 5-28-68. Filed 12-12-67.

Class 51 — Cosmetics and Toilet Preparations

854,418. (See Class 3 for this trademark.)

854,670. (See Class 39 for this trademark.)

854,814. TIGER. Faberge, Inc., assignee of L. T. York Company. SN 204,867. Pub. 10-26-65. Filed 10-26-64.

854,815. RADIANT REDHEAD. Clairol Incorporated. SN 258,066. Pub. 3-26-68. Filed 11-7-66.

854,816. SURF STIK. Bonne Bell, Inc. SN 259,637. Pub. 4-30-68. Filed 11-29-66.

854,817. MAIZETTE. Stiefel Laboratories, Inc. SN 264,859. Pub. 5-28-68. Filed 2-16-67.

854,818. SOMETHING BRIGHT. La Maur, Inc. SN 265,721. Pub. 5-28-68. Filed 3-1-67.

854,819. ROPE. Pethrine Products, Inc. SN 269,446. Pub. 5-28-68. Filed 4-18-67.

854,820. TABAC BLOND. Caron Corporation. SN 270,227. Pub. 3-12-68. Filed 4-28-67.

854,821. GUARDESSE. L'Oreal. SN 271,054. Pub. 5-28-68. Filed 5-9-67.

854,822. NATUROL. Ame Products, Inc. SN 271,216. Pub. 5-28-68. Filed 5-11-67.

854,823. LEMON SQUEEZE. Clairol Incorporated. MULTIPLE CLASS (Classes 51 and 52). SN 272,326. Pub. 5-28-68. Filed 5-25-67.

854,824. SEVENTH GEISHA. Bishop Industries Inc., by change of name from Hazel Bishop Inc. SN 272,606. Pub. 5-28-68. Filed 5-29-67.

854,825. MOD SET. S. Sampino & Waverly Beauty Products Inc., d.b.a. Waverly Beauty Products. SN 273,421. Pub. 5-28-68. Filed 6-8-67.

854,826. BARE BEAUTY. The Borden Company. SN 273,442. Pub. 5-28-68. Filed 6-9-67.

854,827. TORKAY. William S. Jones, d.b.a. Wesjay Laboratories. SN 273,646. Pub. 5-28-68. Filed 6-12-67.

854,828. SPECIAL EFFECTS. Avon Products, Inc. SN 274,934. Pub. 5-28-68. Filed 6-28-67.

854,829. TOP FORM. The Realistic Company, d.b.a. Sharl Kay Products Company. SN 275,302. Pub. 5-28-68. Filed 7-3-67.

854,830. CHAMBERLAIN. Weeks & Leo Co., Inc. SN 275,334. Pub. 5-28-68. Filed 7-3-67.

854,831. UNFAIR ADVANTAGE. Block Drug Company, Inc. SN 275,617. Pub. 5-28-68. Filed 7-10-67.

854,832. ELEMENTS. The Mennen Company. SN 275,859. Pub. 5-28-68. Filed 7-12-67.

854,833. BRASH. Bristol-Myers Company. SN 276,000. Pub. 5-28-68. Filed 7-14-67.

854,834. KER ESSENCE. The Realistic Company. SN 276,036. Pub. 5-28-68. Filed 7-14-67.

854,835. WISH UPON A STAR. Avon Products, Inc. SN 277,793. Pub. 5-28-68. Filed 8-8-67.

854,836. PRE-OP. American Cyanamid Company. SN 282,165. Pub. 5-28-68. Filed 10-10-67.

854,837. EVERY MAN IS NUMERO UNO. Clairol Incorporated. SN 283,226. Pub. 5-28-68. Filed 10-24-67.

854,838. SWIRL MOUTH CLEANSER AND DESIGN. Swirl, Inc. SN 283,287. Pub. 5-28-68. Filed 10-24-67.

854,839. ITALIAN MARBLE. Manufacturers Marketing Co., U.S.A., Inc. SN 283,533. Pub. 5-28-68. Filed 10-27-67.

854,840. TRUST THE FRENCH TO HAVE FINALLY BOTTLED LOVE ITSELF . . . Aloe Creme Laboratories, Inc., d.b.a. Alo-Cosmetics. SN 286,567. Pub. 5-28-68. Filed 12-6-67.

854,841. SEER OF ZEN. Shiseido Company Ltd. SN 289,442. Pub. 5-28-68. Filed 1-24-68.

Class 52 — Detergents and Soaps

854,418. (See Class 3 for this trademark.)

854,426. (See Class 4 for this trademark.)

854,504. (See Class 15 for this trademark.)

854,823. (See Class 51 for this trademark.)

854,842. SPIFFY. The Sinclair Manufacturing Company, assignee of Impact Products, Inc. SN 254,289. Pub. 1-2-68. Filed 9-12-66.

854,843. ALL-MET. Universal Oil Products Company. SN 262,224. Pub. 5-28-68. Filed 1-9-67.

854,844. GLORY. S. C. Johnson & Son, Inc. SN 266,388. Pub. 5-28-68. Filed 3-10-67.

854,845. BLU-BEADS. Blue Ribbon Products Co., Inc. SN 273,027. Pub. 5-28-68. Filed 6-5-67.

854,846. SPECIAL EFFECTS. Avon Products, Inc. SN 275,427. Pub. 5-28-68. Filed 7-6-67.

854,847. SNATCH IT. Klen Way, Inc. SN 275,494. Pub. 5-28-68. Filed 7-6-67.

854,848. SPARKLE 'N GLOW. Helene Curtis Industries, Inc. SN 275,661. Pub. 5-28-68. Filed 7-10-67.

854,849. CONOCO. Continental Oil Company. SN 280,568. Pub. 5-28-68. Filed 9-18-67.

854,850. BABY SOFT. Dusharme Products, Inc. SN 283,235. Pub. 5-28-68. Filed 10-24-67.

854,851. ACCOLADE. Alberto-Culver Company. SN 283,388. Pub. 3-19-68. Filed 10-26-67.

854,852. HI-LIGHTNING. Clairol Incorporated. SN 283,624. Pub. 5-28-68. Filed 10-30-67.

854,853. KED. Crescent Chemical Company. SN 283,638. Pub. 5-28-68. Filed 10-30-67.

854,854. FLOWZ. Jancyn Manufacturing Corp. SN 286,826. Pub. 5-28-68. Filed 12-13-67.

Service Marks

Class 100 — Miscellaneous

854,855. MISCELLANEOUS DESIGN. Rocket Research Corporation. SN 223,728. Pub. 9-27-66. Filed 7-19-65.

854,856. FS AND DESIGN. FS Services, Inc. MULTIPLE CLASS (Classes 100 and 101). SN 258,371. Pub. 5-28-68. Filed 11-10-66.

854,857. S & CO. AND DESIGN. Schwabacher & Co. MULTIPLE CLASS (Classes 100 and 102). SN 261,346. Pub. 5-28-68. Filed S.R. 12-23-66; Am. P.R. 3-21-68.

854,858. ROSSMOOR AND DESIGN. Rossmoor Corporation. SN 270,085. Pub. 5-28-68. Filed 4-26-67.

854,859. THE BULLY BURGER BURGER BARN'S DELICIOUS MEAL IN A BUN AND DESIGN. Burger Barn Corporation. SN 270,473. Pub. 5-28-68. Filed 5-2-67.

854,860. THE BULLY BURGER. Burger Barn Corporation. SN 270,474. Pub. 5-28-68. Filed 5-2-67.

854,861. BURGER BARN AND DESIGN. Burger Barn Corporation. SN 270,476. Pub. 5-28-68. Filed 5-2-67.

854,862. MISCELLANEOUS DESIGN. Reservations/USA, Inc. SN 271,178. Pub. 5-28-68. Filed 5-10-67.

854,863. CURE CHRISTIAN UNITED . . . REAÇHING EVERYONE. The Evangelistic Campaign for Christ, Inc. SN 271,930. Pub. 5-28-68. Filed 5-19-67.

854,864. STOP 35. The Standard Oil Company. MULTIPLE CLASS (Classes 100 and 103). SN 272,883. Pub. 5-28-68. Filed 6-2-67.

854,865. PROJECT ENABLE. Family Service Association of America. SN 280,674. Pub. 5-28-68. Filed 9-19-67.

854,866. CHIC'N TAKE. Camden Norris. SN 281,484. Pub. 5-28-68. Filed 9-29-67.

854,867. THE GRANARY. P. Steele Howard, d.b.a. The Granary. SN 281,793. Pub. 5-28-68. Filed 10-4-67.

854,868. IT'S A MATTER OF LIFE AND BREATH. National Tuberculosis and Respiratory Disease Association, by change of name from National Tuberculosis Association. SN 281,914. Pub. 5-28-68. Filed 10-5-67.

854,869. AGRIMETRICS. W. R. Grace & Co. SN 282,079. Pub. 5-28-68. Filed 10-9-67.

854,870. MISCELLANEOUS DESIGN. Trattoria, Inc. SN 287,497. Pub. 5-28-68. Filed 12-26-67.

854,871. PICCADILLY ALE & STEAK HOUSE AND DESIGN. Restaurant & Waldorf Associates, Inc. SN 287,705. Pub. 5-28-68. Filed 12-28-67.

854,872. GOODWILL AND DESIGN. Goodwill Industries of America, Inc., assignee of Morgan Memorial, Inc. SN 285,293. Pub. 5-28-68. Filed 11-21-67.

854,873. USS AND DESIGN. United States Steel Corporation. SN 291,239. Pub. 5-28-68. Filed 2-16-68.

854,874. MISCELLANEOUS DESIGN. Chef's Orchid Airline Caterers, Inc. SN 291,248. Pub. 5-28-68. Filed 2-16-68.

854,875. STEAK OUT. Norman J. Kasser. SN 292,240. Pub. 5-28-68. Filed 3-1-68.

Class 101 — Advertising and Business

854,856. (See Class 100 for this trademark.)

854,876. K MART PLAZA. S. S. Kresge Company. SN 210,966. Pub. 5-28-68. Filed 1-29-65.

854,877. AGRI-DATA PROCESSING SERVICE AND DESIGN. Henrie L. Miller, d.b.a. Agri-Data Processing Service. SN 270,072. Pub. 5-28-68. Filed 4-26-67.

854,878. UCOM. Universal Computer Systems, Inc. SN 271,553. Pub. 5-28-68. Filed 5-15-67.

854,879. MANDATA. Executive Secretaries, Inc. SN 272,178. Pub. 5-28-68. Filed 5-23-67.

854,880. PATENT DRAWINGS FOR THE WORLD AND DESIGN. Patent Reproduction Company. SN 275,391. Pub. 5-28-68. Filed 7-5-67.

854,881. ADT ETC. AND DESIGN. American District Telegraph Company. SN 275,995. Pub. 5-28-68. Filed 7-14-67.

854,882. CAMALIER & BUCKLEY. Camalier & Buckley, Inc. SN 281,173. Pub. 5-23-68. Filed 9-26-67.

854,883. CAMALIER & BUCKLEY AND DESIGN. Camalier & Buckley, Inc. SN 281,174. Pub. 5-28-68. Filed 9-26-67.

854,884. PATHWAY. Louket Markets Inc., assignee of Neighborhood Markets, Inc. SN 282,519. Pub. 2-27-68. Filed 10-16-67.

854,885. TC AND DESIGN. Turistcheque, Inc. SN 290,230. Pub. 5-28-68. Filed 2-5-68.

854,886. TURISTCHEQUE. Turistcheque, Inc. SN 290,231. Pub. 5-28-68. Filed 2-5-68.

Class 102 — Insurance and Financial

854,857. (See Class 100 for this trademark.)

854,887. BUG (DESIGN). Allstate Enterprises, Inc. SN 270,336. Pub. 5-28-68. Filed 5-1-67.

854,888. NATIONWIDE. Nationwide Mutual Insurance Company. SN 276,679. Pub. 5-28-68. Filed 7-24-67.

854,889. DYNAMICS. Financial Programs, Inc. SN 288,742. Pub. 5-28-68. Filed 1-15-68.

Class 103 — Construction and Repair

854,864. (See Class 100 for this trademark.)

854,890. M & W AND DESIGN. M & W Iron Works Inc. SN 209,435. Pub. 5-28-08. Filed 4-18-67.

854,891. SINCLAIR AND DESIGN Sinclair Refining Company. SN 272,111. Pub. 5-28-68. Filed 5-22-67.

854,892. TRULY NOLEN. Truly Nolen, Inc. SN 276,192. Pub. 5-28-68. Filed 7-17-67.

854,893. HI-LO. Hodges Development Co., d.b.a. Hi-Lo Oil Co. SN 281,081. Pub. 5-28-68. Filed 9-25-67.

Class 105 — Transportation and Storage

854,894. KILROY WAS THERE AND DESIGN. Kilroy's World Travel Bureaus, Inc. SN 271,372. Pub. 5-28-68. Filed 5-12-67.

854,895. CITYRAMA. Cityrama Corp. SN 272,234. Pub. 5-28-68. Filed 5-10-67.

Class 106 — Material Treatment

854,896. SNORKEL. Temperature Processing Co., Inc. SN 270,014. Pub. 5-28-68. Filed 4-25-67.

854,897. NORTH STAR COLOR SERVICE. Professional Portrait Service, Inc. SN 271,069. Pub. 5-28-68. Filed 5-9-67

854,898. NSA AND DESIGN. National Sintered Alloys, Inc. SN 274,886. Pub. 5-28-68. Filed 6-27-67.

854,899. GENIE AND DESIGN. Kim Color, Inc. SN 280,748. Pub. 12-5-67. Filed 9-20-67.

854,900. SURFHARD. Harris Metals, Inc. SN 281,290. Pub. 5-28-68. Filed 9-27-67.

Class 107 — Education and Entertainment

854,901. SING-OUT. Moral Re-Armament, Inc. SN 242,632. Pub. 10-17-67. Filed 4-4-66.

854,902. CHICAGO MUSTANGS. Chicago Mustangs, Inc. SN 273,604. Pub. 5-28-68. Filed 6-12-67.

854,903. LEARNING FOUNDATIONS ETC. AND DESIGN. Learning Foundations International, Inc. SN 274,758. Pub. 5-28-68. Filed 6-26-67.

854,904. MONTGOMERY STREET REPORTER. Eugene A. Blumenthal. SN 275,909. Pub. 5-28-68. Filed 7-13-67.

854,905. D AND DESIGN. Dimension Productions, Ltd. SN 276,105. Pub. 5-28-68. Filed 7-17-67.

854,906. INTERNATIONAL CONGRESS OF ROUGH RIDERS. Montie Montana, Jr. SN 286,795. Pub. 5-28-68. Filed 12-13-67.

Collective Membership Marks

Class 200

854,907. NAMCO APPROVED AND DESIGN. The Namco Association of Endorsed Businessmen. SN 259,755. Pub. 5-28-68. Filed 11-30-66.

854,908. SDI STEEL DECK INSTITUTE AND DESIGN. Steel Deck Institute. SN 263,853. Pub. 5-28-68. Filed 2-2-67.

Certification Mark

Class B — Services

854,909. W AND DESIGN. Woodall Publishing Company. SN 283,405. Pub. 5-28-68. Filed 10-26-67.

SUPPLEMENTAL REGISTER

These registrations are not subject to opposition.

Class 2 — Receptacles

854,910. Gessner Products Company, Inc., Ambler, Pa. SN 251,999. Filed P.R. 8-9-66; Am. S.R. 5-29-68.

COLONIAL TRIVET

For Coaster Sets Including Stirrers (Int. Cl. 21).
First use Feb. 10, 1966.

854,911. Amos R. Kanaga, d.b.a. Food-Pak, San Mateo, Calif. SN 252,958. Filed P.R. 8-23-66; Am. S.R. 6-7-68.

STA-HOT

For Receptacles, Made of Paper or Paper-Like Material, for Cooked Food (Int. Cl. 21).
First use July 9, 1959.

Class 4 — Abrasives and Polishing Materials

854,912. U.S. Plywood-Champion Papers Inc., New York, N.Y., by merger and change of name from United States Plywood Corporation, New York, N.Y. SN 262,453. Filed P.R. 1-12-67; Am. S.R. 5-20-68.

Scratch Hider

For Paste for Blending Scratches, Gouges, and Cigarette Burns in Wood Paneling, Partitions, Furniture, and Similar Goods (Int. Cl. 3).
First use on or about Dec. 1, 1966.

Class 23 — Cutlery, Machinery, and Tools, and Parts Thereof

854,913. Ray T. Flugger, Novato, Calif. SN 260,657. Filed P.R. 12-13-66; Am. S.R. 6-17-68.

FLUGGER

For Muffler Systems and Parts Thereof (Int. Cl. 7).
First use Nov. 14, 1966.

854,914. Oliver Corporation, Chicago, Ill. SN 275,457. Filed P.R. 7-6-67; Am. S.R. 6-4-68.

MIGHTY·LIFT

For Fork Lift Trucks (Int. Cl. 12).
First use Mar. 13, 1967.

Class 29 — Brooms, Brushes, and Dusters

854,915. Helmac Products Corporation, Flint, Mich. SN 259,424. Filed P.R. 11-25-66; Am. S.R. 6-12-68.

Roll-n-Rinse

For Washable, Re-Usable, Chemically Coated Lint Remover Rollers (Int. Cl. 21).
First use July 26, 1966.

Class 32 — Furniture and Upholstery

854,916. Young Spring & Wire Corporation, Detroit, Mich. SN 259,363. Filed P.R. 11-23-66; Am. S.R. 5-15-68.

frameAdjuster

For Mounting Bracket for a Spring Assembly Used in Furniture Such as Chairs and Sofas (Int. Cl. 20).
First use Nov. 14, 1966.

Class 34 — Heating, Lighting, and Ventilating Apparatus

854,917. De Laval Company Limited, Peterborough, Ontario, Canada. SN 266,480. Filed P.R. 1-31-67; Am. S.R. 6-17-68.

Rosenblads

For Heat Exchangers of the Gasket-Plate and Spiral-Plate Types (Int. Cl. 11).
First use May 1956.

Class 36 — Musical Instruments and Supplies

854,918. Crown Radio Corporation, Taito-ku, Tokyo, Japan. SN 251,800. Filed P.R. 8-5-66; Am. S.R. 6-10-68.

SUTTON

For Tape-Recorders (Int. Cl. 9).
First use Sept. 1, 1965.

854,919. Kimball Piano & Organ Co., Jasper, Ind. SN 260,335. Filed 12-8-66.

KIMBALL ELECTRAMATIC

For Player Pianos and Player Organs (Int. Cl. 15).
First use Sept. 28, 1963.

Class 37 — Paper and Stationery

854,920. Brown Company, Holyoke, Mass. SN 279,266. Filed P.R. 8-29-67; Am. S.R. 5-10-68.

DREXEL

For Writing Paper, Printing Paper, and Converting Paper for Stationery (Int. Cl. 16).
First use 1924.

Class 38 — Prints and Publications

854,921. Index Publishing Corp., Chicago, Ill. SN 273,070. Filed P.R. 6-5-67; Am. S.R. 6-12-68.

COOK COUNTY CONTRACTORS REGISTER

For Reference Book Published From Time to Time for the Construction Industry and Containing a Classified List of Contractors, Architects, Structural Engineers, Material and Equipment Dealers and Manufacturers (Int. Cl. 16).
First use June 1, 1967.

854,922. Piper, Jaffray & Hopwood, Minneapolis, Minn. SN 279,091. Filed P.R. 8-25-67; Am. S.R. 5-28-68.

FARM OUTLOOK REPORT

For Periodic Survey of Agri-Business Intended Primarily for Use by Institutional Investors (Int. Cl. 16).
First use September 1966.

Class 50 — Merchandise Not Otherwise Classified

854,923. Hallmark Cards, Incorporated, Kansas City, Mo. SN 267,750. Filed P.R. 3-28-67; Am. S.R. 5-23-68.

CREATIVE GIFT KIT

For Packaged Precut Pieces, Parts and Equipment for Assembling and Completing Construction of Decorative Articles (Int. Cl. 20).
First use Mar. 9, 1967.

854,924. General Numismatics Corporation, Yeadon, Pa. SN 270,779. Filed P.R. 5-5-67; Am. S.R. 5-29-68.

BONDED SILVERCLAD

For Commemorative Coins Made From Material Comprising a Center Core of Nickel-Silver Alloy Having Outside Layers of Sterling Silver Laminated Thereto Made Into Coins (Int. Cl. 14).
First use on or about Feb. 1, 1967.

TRADEMARK REGISTRATIONS RENEWED

31,498. "BARTON & GUESTIER" ETC. AND DESIGN. Cl. 47 (Int. Cl. 33). 5-3-1898.
69,532. UNILETS. Cl. 21 (Int. Cl. 9). 6-16-08.
69,725. B.S.A. Cl. 19 (Int. Cl. 12). 6-30-08.
70,629. "PERFECTION" ETC. AND DESIGN. Cl. 46 (Int. Cl. 30). 9-15-08.
70,850. IRRIGOL. Cl. 18 (Int. Cl. 5). 10-13-08.
241,140. MIFFLENE. Cl. 18 (Int. Cl. 5). 4-17-28.
241,510. PALM BEACH LIFE. Cl. 38 (Int. Cl. 16). 5-1-28.
242,215. "GOLDEN GROVES" AND DESIGN. Cl. 46 (Int. Cl. 31). 5-15-28.
243,330. CROMOVAN. Cl. 14 (Int. Cl. 6). 6-19-28.
243,574. LONARIT. Cl. 1 (Int. Cl. 17). 6-26-28.
243,575. CELOFOIL. Cl. 1 (Int. Cl. 17). 6-26-28.
243,591. ISOPHANE. Cl. 1 (Int. Cl. 17). 6-26-28.
243,592. NEOPHANE. Cl. 1 (Int. Cl. 17). 6-26-28.
243,665. "RED SEAL" ETC. AND CIRCULAR DESIGN. Cl. 33 (Int. Cl. 9). 6-26-28.
243,822. PUROL. Cl. 15 (Int. Cl. 4). 7-3-28.
244,109. TRUPONTICS. Cl. 44 (Int. Cl. 10). 7-10-28.
244,171. DORMY. Cl. 42 (Int. Cls. 24 and 27). 7-17-28.
244,184. NUVOPAK. Cl. 2 (Int. Cl. 6). 7-17-28.
244,647. DURAGLAS. Cl. 26 (Int. Cl. 9). 7-24-28.
246,685. KELLOGG'S. Cl. 1 (Int. Cl. 31). 9-11-28.
246,713. "ST. GEORGE" ETC. AND DESIGN. Cl. 39 (Int. Cl. 25). 9-11-28.
247,187. "FARR'S ARCH PERFECTOR" ETC. AND DESIGN. Cl. 39 (Int. Cl. 25). 9-25-28.
248,760. GAGE-MATIC. Cl. 23 (Int. Cl. 7). 10-30-28.
249,230. CELLEEN. Cl. 44 (Int. Cl. 5). 11-13-28.
437,022. WYNENE. Cl. 1 (Int. Cl. 21). 3-2-48.
438,238. STYRADOR. Cl. 12 (Int. Cl. 19). 4-13-48.
438,742. WILCOLOY. Cl. 14 (Int. Cls. 6 and 14). 5-11-48.
439,160. TWENTY-FIRST CENTURY FABRICS. Cl. 42 (Int. Cl. 24). 6-8-48.
439,161. 21ST CENTURY FABRICS. Cl. 42 (Int. Cl. 24). 6-8-48.
439,307. FLAME (DESIGN). Cl. 6 (Int. Cl. 4). 6-15-48.
439,566. WHITE SHOULDERS. Cl. 39 (Int. Cl. 25). 7-6-48.
439,630. CHEMISEAL. Cl. 35 (Int. Cl. 17). 7-6-48.
439,672. VERMEX. Cl. 6 (Int. Cl. 5). 7-13-48.
439,790. IATSE AND DESIGN. Cl. 38 (Int. Cl. 16). 7-20-48.
439,793. AO. Cl. 23 (Int. Cl. 7). 7-20-48.
439,879. CARDIS. Cl. 15 (Int. Cl. 4). 7-27-48.
439,924. E & J. Cl. 44 (Int. Cl. 10). 7-27-48.
440,632. CONTINENTAL DUO-DOWN AND DESIGN. Cl. 39 (Int. Cl. 25). 9-14-48.
440,782. TYPHOON. Cl. 35 (Int. Cl. 12). 9-28-48.
441,046. NESA. Cl. 33 (Int. Cl. 21). 10-19-48.
441,263. DIXON'S. Cl. 12 (Int. Cl. 19). 11-9-48.
441,299. PRINCE OXFORD. Cl. 42 (Int. Cl. 24). 11-16-48.
441,326. LEMANIA. Cl. 27 (Int. Cl. 14). 11-16-48.
441,405. CANDLEGLOW. Cl. 39 (Int. Cl. 25). 11-23-48.
500,063. MARVEL. Cl. 46 (Int. Cl. 30). 4-13-48.
500,136. MAYFAIR. Cl. 46 (Int. Cl. 30). 4-27-48.
500,151. FOUR SEASONS SALT. Cl. 46 (Int. Cl. 30). 5-4-48.
500,329. GATEWAY PRODUCT. Cl. 42 (Int. Cl. 24). 5-11-48.
500,447. SUNNYFIELD RICE GEMS. Cl. 46 (Int. Cl. 30). 5-25-48.
500,505. R-1. Cl. 15 (Int. Cl. 4). 6-1-48.
500,650. BUFFECILLIN. Cl. 18 (Int. Cl. 5). 6-15-48.
500,710. DR. GRABOW. Cl. 8 (Int. Cl. 34). 6-22-48.
500,930. NEOCILLIN. Cl. 18 (Int. Cl. 5). 7-6-48.
500,963. PEG. Cl. 6 (Int. Cl. 1). 7-13-48.
501,146. OXYARC. Cl. 21 (Int. Cl. 9). 7-27-48.
501,195. SIGHT-TITE. Cl. 34 (Int. Cl. 11). 7-27-48.
501,212. ALLURON. Cl. 42 (Int. Cl. 27). 7-27-48.
501,389. FORT DODGE AND DESIGN. Cl. 18 (Int. Cl. 5). 8-3-48.
501,427. JUNO. Cl. 8 (Int. Cl. 34). 8-10-48.
501,442. AIRESEARCH. Cl. 26 (Int. Cl. 9). 8-10-48.
501,668. DARVAL. Cl. 35 (Int. Cl. 17). 8-17-48.

502,041. AC IN CIRCLE (DESIGN). Cl. 106 (Int. Cl. 40). 9-7-48.
502,482. KARASTAN. Cl. 42 (Int. Cl. 27). 9-28-48.
502,543. KANKAKEE. Cl. 1 (Int. Cl. 18). 9-28-48.
502,691. SLIX. Cl. 6 (Int. Cl. 1). 10-5-48.
502,709. ACETEST. Cl. 6 (Int. Cl. 1). 10-5-48.
502,711. CLINITEST. Cl. 6 (Int. Cl. 1). 10-5-48.
502,749. D & B. Cl. 103 (Int. Cl. 37). 10-5-48.
502,752. TL AND DESIGN. Cl. 100 (Int. Cl. 42). 10-5-48.
502,765. FENASEPTIC. Cl. 18 (Int. Cl. 5). 10-5-48.
502,794. OVER-SEA. Cl. 46 (Int. Cls. 29, 30, and 32). 10-12-48.
502,879. HATCHIBATOR. Cl. 50 (Int. Cl. 7). 10-12-48.
502,966. OWENSBORO CLUB. Cl. 49 (Int. Cl. 33). 10-12-48.
503,056. IVES. Cl. 25 (Int. Cl. 6). 10-19-48.
503,153. HEREFORD BRAND AND DESIGN. Cl. 3 (Int. Cl. 18). 10-19-48.
503,214. CYANOFLAKE. Cl. 6 (Int. Cl. 1). 10-19-48.
503,238. CAMPANULA. Cl. 43 (Int. Cl. 23). 10-19-48.
503,385. PV AND DESIGN. Cl. 1 (Int. Cl. 31). 10-26-48.
503,394. ANIFEED. Cl. 46 (Int. Cl. 3). 10-26-48.
503,400. MF. Cl. 14 (Int. Cl. 6). 10-26-48.
503,441. TRUSS-LOOP. Cl. 12 (Int. Cl. 6). 10-26-48.
503,442. BOSTWICK. Cl. 12 (Int. Cl. 6). 10-26-48.
503,443. TRUSS-WING. Cl. 12 (Int. Cl. 19). 10-26-48.
503,457. ALTA. Cl. 46 (Int. Cl. 30). 10-26-48.
503,458. KILBURN. Cl. 51 (Int. Cl. 3). 10-26-48.
503,468. MONTE. Cl. 42 (Int. Cl. 24). 10-26-48.
503,518. ACIDORIDE. Cl. 18 (Int. Cl. 5). 10-26-48.
503,735. ICHTHYMALL. Cl. 18 (Int. Cl. 5). 11-9-48.
503,739. TALON. Cl. 26 (Int. Cl. 9). 11-9-48.
503,756. VITA-KAPS. Cl. 18 (Int. Cl. 5). 11-9-48.
503,834. NEVERLEEK. Cl. 39 (Int. Cl. 25). 11-9-48.
503,849. TALON. Cl. 28 (Int. Cl. 14). 11-16-48.
503,862. DIVO. Cl. 52 (Int. Cl. 1). 11-16-48.
503,863. KRESKY AND DESIGN. Cl. 34 (Int. Cl. 11). 11-16-48.
503,867. RUB-R-KLEEN. Cl. 4 (Int. Cl. 1). 11-16-48.
503,884. ATLAS. Cl. 26 (Int. Cl. 9). 11-16-48.
503,885. ATLAS. Cl. 26 (Int. Cl. 9). 11-16-48.
503,976. COBBLER. Cl. 42 (Int. Cl. 24). 11-16-48.
503,977. HOBNAIL. Cl. 42 (Int. Cl. 24). 11-16-48.
503,978. SAPPHIRE. Cl. 42 (Int. Cl. 24). 11-16-48.

TRADEMARK REGISTRATIONS CANCELED

Section 8

The following registrations issued June 26, 1962

733,206. DOT DESIGN. Cl. 1.
733,209. VAPO-FILM. Cl. 1.
733,210. STONEGLAZE. Cl. 2.
733,212. MYERS MIRACLE FRIEND OF THE POLISHERS & BUFFERS AND DESIGN. Cl. 4.
733,215. TRYZOL. Cl. 6.
733,221. FLO-CHROME. Cl. 6.
733,233. HUBBARD HALL AND TRIANGLE DESIGN. Cl. 10.
733,234. FORCI-GRO. Cl. 10.
733,235. LAWN CHOW. Cl. 10.
733,238. SPELL RIGHT FOR TYPEWRITERS THAT DON'T AND DESIGN. Cl. 11.
733,241. ADD-A-CABANA. Cl. 12.
733,242. GEOSPACE. Cl. 12.
733,245. MARRIAGE CIRCLE. Cl. 12.
733,247. SAF-T-DOR. Cl. 12.
733,249. LIVING AND DESIGN. Cl. 12.
733,251. QUIK-FLOR. Cl. 12.
733,252. PAR-PLY. Cl. 12.
733,254. HYDRO-STEEL. Cl. 12.
733,257. FLO-GUN. Cl. 12.
733,259. WACOWALL. Cl. 12.
733,261. POLY-COAT. Cl. 12.
733,262. ARROWHEAD AND DESIGN. Cl. 12.
733,265. PROTEK-O-RAIL. Cl. 13.
733,269. WROUGHT-WELD. Cl. 14.
733,272. HEXCROME AND DESIGN. Cl. 14.
733,280. "RIW" AND DESIGN. Cl. 16.
733,283. COLORSEAL. Cl. 16.
733,288. CHARACTER. Cl. 17.
733,289. HIGHGATE. Cl. 17.
733,290. PRIVATE ESTATE. Cl. 17.
733,292. TANNER'S PAINLESS EYE WATER. Cl. 18.
733,293. PARACIN. Cl. 18.
733,295. IDATONIC. Cl. 18.
733,299. GUIADOL-CHERRY. Cl. 18.
733,305. AMPHOCORTRIN. Cl. 18.
733,307. LIQUAGEL. Cl. 18.
733,310. MULTI-FANT. Cl. 18.
733,311. GENEXOL. Cl. 18.
733,312. NATRUVIMS. Cl. 18.
733,313. MULTI-NIB. Cl. 18.
733,314. SYRITON. Cl. 18.
733,318. TETRAPERSANTIN. Cl. 18.
733,319. SERPOPERSANTIN. Cl. 18.
733,324. GERAFORTE. Cl. 18.
733,328. SUNRAY SPORTSMAN. Cl. 19.
733,333. SCAT. Cl. 19.
733,337. THERMAL-AIRE. Cl. 21.
733,340. ASTROPHONE. Cl. 21.
733,341. INFRAPHONE. Cl. 21.
733,343. ELECTRALERT. Cl. 21.
733,344. POWERDOOR AND DESIGN. Cl. 21.
733,345. RESISTANCE SYMBOL WITHIN HEXAGONAL DESIGN. Cl. 21.
733,347. DYNATUNER. Cl. 21.
733,351. DIELOX. Cl. 21.
733,352. BUG SNUFFER. Cl. 21.
733,355. HUG-PLUG. Cl. 21.
733,356. DART. Cl. 21.
733,358. CIVIL WAR AND DESIGN. Cl. 22.
733,359. TUMBLE-KING. Cl. 22.
733,362. CHANCELLORSVILLE AND DESIGN. Cl. 22.
733,368. PIKE-MASTER. Cl. 2.
733,373. POTATO MASHER. Cl. 22.
733,376. BUSCHLOADER. Cl. 23.
733,378. POWER TORQUE. Cl. 23.
733,379. CLOG-PRUF. Cl. 23.
733,384. COUNTESS. Cl. 23.
733,394. GD AND DESIGN. Cl. 23.
733,399. NOVO. Cl. 26.
733,402. BUTTER MOULD. Cl. 30.
733,406. WIX HEVI-DUTY. Cl. 31.
733,407. FIBRIT. Cl. 32.
733,412. DURA STEEL AND DESIGN. Cl. 32.
733,413. OVATION. Cl. 32.
733,416. MUG AND DESIGN. Cl. 33.
733,417. NEBULEX. Cl. 33.
733,420. CAMERON/HYDRONIC AND DESIGN. Cl. 34.
733,421. MULTI-WING AND DESIGN. Cl. 34.
733,424. AUTO-VOICE. Cl. 36.
733,426. LITHOPOST. Cl. 37.
733,428. PIEDMONT PAPERS PP. Cl. 37.
733,432. DAN-D-LENE. Cl. 37.
733,434. TRANSLIP AND DESIGN. Cl. 37.
733,436. THE QUARTER HORSE BREEDER. Cl. 38.
733,439. GOOD FORTUNE ETC. AND DESIGN. Cl. 38.
733,442. LARRY BRANNON. Cl. 38.
733,443. THE MARKET METER. Cl. 38.
733,444. ST. JUDE. Cl. 38.
733,446. THE FACE OF FAITH. Cl. 38.
733,447. THIRTEEN. Cl. 38.
733,448. COMBAT. Cl. 38.
733,449. ECOS DE ELLAS. Cl. 38.
733,452. APE. Cl. 38.
733,453. NATEC. Cl. 38.
733,455. THE JOURNAL OF AMERICAN INNKEEPING. Cl 38.
733,457. PARTY. Cl. 38.
733,466. SAF-T-GLO. Cl. 39.
733,467. JEAN LINCOURT. Cl. 39.
733,468. FOXDALE. Cl. 39.
733,471. TIDI-BELLE. Cl. 39.
733,475. ROMILLE. Cl. 39.
733,476. REPRESENTATION OF A HOUSE IN A CIRCLE ON A SQUARE BACKGROUND. Cl. 42.
733,477. WAFFLETTE. Cl. 42.

733,482. DESERT COLLECTION. Cl. 42.
733,484. OXY-LYFE. Cl. 44.
733,485. FOUR SEASONS. Cl. 44.
733,486. IMPERIAL LADY. Cl. 44.
733,487. PIC-A-POP. Cl. 45.
733,489. FOREMOST AND DESIGN. Cl. 45.
733,497. GIFFORD'S. Cl. 46.
733,508. SAUERS AND DESIGN. Cl. 46.
733,511. NORGANIC. Cl. 46.
733,517. HORLACHER 99. Cl. 48.
733,518. SPLOG. Cl. 50.
733,519. DIETZ AND DESIGN. Cl. 50.
733,524. BEAUTY FROM THE DEEP. Cl. 51.
733,526. NAVIX. Cl. 51.
733,529. BUBBLE SCRUB. Cl. 51.
733,531. VOLUME. Cl. 52.
733,536. LAVENDOMEAL. Cl. 52.
733,539. MARK 7 AND DESIGN. Cl. 52.
733,540. IMPERIAL GUARD. Cl. 52.
733,542. BLIND DATE. Cl. 52.
733,543. MR. BUB'L. Cl. 52.
733,546. METROLONICS. Cl. 100.
733,559. FLIGHT-GUARD. Cl. 102.
733,568. THE AMERICANAIRE CO. ETC. AND DESIGN. Cl. 103.
733,571. THE AIRWAYS CLUB. Cl. 105.
733,576. T-SQUARE AND TRIANGLE DESIGN WITHIN A DOUBLE CIRCLE. Cl. 107.
733,578. "BEAUTIFUL BUSINESS." Cl. 107.
733,585. MINIT 1 CUP. Cl. 2.
733,586. SEA BRINE AND DESIGN. Cl. 6.
733,587. BASIC HOMES. Cl. 12.
733,588. CUSTOM-WALL. Cl. 12.
733,591. WYR-LOK. Cl. 23.
733,594. WHAT A WONDERFUL WAY TO WEATHER THE WEATHER. Cl. 39.
733,598. THE EXECUTIVE CAREER SERVICE. Cl. 101.
733,599. GETZ. Cl. 101.

INDEX OF REGISTRANTS

AUGUST 13, 1968

(Registered ; Renewed ; Canceled ; Amended, Disclaimed, Corrected, etc. ; New Certificates ; 12c Publications.)

AB Autokemi, Stockholm, Sweden. 854,594, pub. 5–28–68. Cl. 26.
A/S Telix, Holte, near Copenhagen, Denmark. 733,526, canc. Cl. 51.
Abbott Laboratories, North Chicago, Ill. 503,518, ren. 8–13–68. Cl. 18.
Abbott Laboratories, North Chicago, Ill. 503,756, ren. 8–13–68. Cl. 18.
Abbott Laboratories, d.b.a. Ross Laboratories, North Chicago, Ill. 854,529, pub. 5–28–68. Cl. 18.
Acro Welder Mfg. Co., Milwaukee, Wis. 854,613, pub. 3–26–68. Cl. 34.
Agri-Data Processing Service : *See*—
  Miller, Henrie L.
Agway, Inc., Syracuse, N.Y. 854,525, pub. 5–28–68. Cl. 18.
Air Reduction Co., Inc. : *See*—
  E & J Mfg. Co.
Airways Club, Inc., The : *See*—
  Guardian Life Insurance Co. of America, The.
Airways Club, Inc., The, New York, N.Y. 733,751, canc. Cl. 105.
Alberto-Culver Co., Melrose Park, Ill. 854,851, pub. 3–19–68. Cl. 52.
Alexander-Balart Co., Daly City, Calif. 503,457, ren. 8–13–68. Cl. 46.
Alkalol Co., The, Tauton, Mass. 70,850, ren. 8–13–68. Cl. 18.
Allegheny Ludlum Steel Corp., Pittsburgh, Pa. 854,501, pub. 5–28–68. Cl. 14.
Allied Piping Products Co. of Pennsylvania, Ambler, Pa. 854,-494, pub. 5–28–68. Cl. 13.
Allstate Enterprises, Inc., Skokie, Ill. 854,887, pub. 5–28–68. Cl. 102.
Alo-Cosmetics : *See*—
  Aloe Creme Laboratories, Inc.
Aloe Creme Laboratories, Inc., d.b.a. Alo-Cosmetics, Fort Lauderdale, Fla. 854,840, pub. 5–28–68. Cl. 51.
Amberley Greeting Card Co., Cincinnati, Ohio. 854,652, pub. 5–28–68. Cl. 38.
Ame Products, Inc., New Haven, Conn. 854,822, pub. 5–28–68. Cl. 51.
American Abrasive Metals Co., Irvington, N.J. 854,478–9, pub. 5–28–68. Cl. 12.
American Bio-Chemical Corp., d.b.a. Bauer Pharmaceuticals, Los Angeles, Calif. 733,324, canc. Cl. 18.
American Can Co., New York, N.Y. 854,410, pub. 5–28–68. Cl. 2.
American Chewing Products Corp., Havertown, Pa. 854,780, pub. 1–16–68. Cl. 46.
American Cyanamid Co., Wayne, N.J. 854,444, pub. 5–28–68. Cl. 6.
American Cyanamid Co., Wayne, N.J. 854,455, pub. 5–28–68. Cl. 10.
American Cyanamid Co., Wayne, N.J. 854,471, pub. 5–28–68. Cl. 12.
American Cyanamid Co., Wayne, N.J. 854,836, pub. 5–28–68. Cl. 51.
American District Telegraph Co., New York, N.Y. 854,881, pub. 5–28–68. Cl. 101.
American Home Products Corp. : *See*—
  Fort Dodge Laboratories, Inc.
American Hospital Supply Corp., Evanston, Ill. 854,526–7, pub. 5–28–68. Cl. 18.
American Lithofold Corp., St. Louis, Mo. 733,426, canc. Cl. 37.
American Optical Co., to American Optical Corp., Southbridge, Mass. 244,647, ren. 8–13–68. Cl. 26.
American Optical Co., to American Optical Co., Southbridge, Mass. 439,793, ren. 8–13–68. Cl. 23.
American Optical Co., Southbridge, Mass. 733,466, canc. Cl. 39.
American Optical Corp. : *See*—
  American Optical Co.
American Polymers, Inc., Paterson, N.J. 854,398, pub. 3–12–68. Cl. 1.
American Thread Co., The, New York, N.Y. 854,723, pub. 5–28–68. Cl. 43.
American-Saint Gobain Corp., Kingsport, Tenn. 733,417, canc. Cl. 33.
American-Wheaton Glass Corp., Millville, N.J. 733,416, canc. Cl. 33.
Americanaire Co. : *See*—
  Americanaire Cooling Corp.
Americanaire Cooling Corp., from Americanaire Co., Brooklyn, N.Y. 733,568, canc. Cl. 103.
Ames Co., Inc., to Miles Laboratories, Inc., Elkhart, Ind. 502,709, ren. 8–13–68. Cl. 6.
Ames Co., Inc., to Miles Laboratories, Inc., Elkhart, Ind. 502,-711, ren. 8–13–68. Cl. 6.
Anaconda Co., The, New York, N.Y. 854,502, pub. 5–28–68. Cl. 14.
Andersen, F. S., d.b.a. F. S. Andersen Ingenior-Og Maskinforretning, I/S, Charlottenlund, Denmark. 733,421, canc. Cl. 34.
Andersen, F. S., Ingenior-Og Maskinforretning, I/S : *See*—
  Andersen, F. S.
Anderson, C. W., Hosiery Co. : *See*—
  Coast Empire, Inc.
Angelica Corp. : *See*—
  Angelica Jacket Co.
Angelica Jacket Co., to Angelica Corp., St. Louis, Mo. 503,468, ren. 8–13–68. Cl. 42.
Appleton Electric Co., Chicago, Ill. 69,532, ren. 8–13–68. Cl. 21.
Aquarium Foods Ltd., New York, N.Y. 854,765, pub. 5–28–68. Cl. 46.
Aquariums Inc. : *See*—
  Metaframe Corp.
Arcos Corp., Philadelphia, Pa. 501,146, ren. 8–13–68. Cl. 21.
Armitage Brothers Ltd., Nottingham, England. 854,772, pub. 5–28–68. Cl. 46.
Arnold, Schwinn & Co., to Schwinn Bicycle Co., Chicago, Ill. 440,782, ren. 8–13–68. Cl. 35.
Arrowhead Iron Works, Inc., North Kansas City, Mo. 733,262, canc. Cl. 12.
Arvey Corp., to Arvey Corp., Chicago, Ill. 502,041, ren. 8–13–68. Cl. 106.
Associated Products Co., Inc., Washington, D.C. 503,458, ren. 8–13–68. Cl. 51.
Astec, Inc., Orange, Conn. 854,599, pub. 5–28–68. Cl. 26.
Auto-Photo Co., Los Angeles, Calif. 733,424, canc. Cl. 36.
Avalon Hill Co., The, Baltimore, Md. 733,358, canc. Cl. 22.
Avalon Hill Co., The, Baltimore, Md. 733,362, canc. Cl. 22.
Avon Products, Inc., New York, N.Y. 854,828, pub. 5–28–68. Cl. 51.
Avon Products, Inc., New York, N.Y. 854,835, pub. 5–28–68. Cl. 51.
Avon Products, Inc., New York, N.Y. 854,846, pub. 5–28–68. Cl. 52.
Axaline Golf Co., Sherman Oaks, Calif. 733,373, canc. Cl. 22.
Azalea Poultry Farms, Azalea, Oreg. 733,234, canc. Cl. 10.
Ball Bros. Co. Inc., Muncie, Ind. 854,806, pub. 5–28–68. Cl. 50.
Barber-Colman Co., Rockford, Ill. 501,195, ren. 8–13–68. Cl. 34.
Barnes, Bramley : *See*—
  Pyro Foam Corp.
Barton & Guestier, to Barton & Guestier, S.A., Bordeaux, France. 31,498, ren. 8–13–68. Cl. 47.
Barton & Guestier, S.A. : *See*—
  Barton & Guestier.
Bassett, Geo., & Co. Ltd., Sheffield, England. 854,750, pub. 5–28–68. Cl. 46.
Bauer Pharmaceuticals : *See*—
  American Bio-Chemical Corp.
Baxter Laboratories, Inc., Morton Grove, Ill. 733,299, canc. Cl. 18.
Bayuk Cigars Inc., Philadelphia, Pa. 854,524, pub. 5–28–68. Cl. 17.
Beatrice Foods Co., Chicago, Ill. 854,729, pub. 5–28–68. Cl. 45.
Beatrice Foods Co., Chicago, Ill. 854,762, pub. 5–28–68. Cl. 46.
Beautiful Business : *See*—
  Sitler, Frances S.
Becton, Dickinson & Co., East Rutherford, N.J. 854,639, pub. 5–28–68. Cl. 38.
Bergen Wire Rope Co., Lodi, N.J. 854,488, pub. 5–28–68. Cl. 13.
Bertschy, Roger, Berne, Switzerland. 733,531, canc. Cl. 52.
Best Equipment & Supply Co. : *See*—
  Martin, James N., Jr.
Bingham, Samuel, Co., Chicago, Ill. 854,563, pub. 2–13–68. Cl. 23.
Bio-Organic Chemicals, Inc., Denver, Colo. 854,475, pub. 5–28–68. Cl. 12.
Birmingham Small Arms Co. Ltd., The, Birmingham, England. 69,725, ren. 8–13–68. Cl. 19.
Bishop, Hazel, Inc. : *See*—
  Bishop Industries Inc.
Bishop Industries Inc., from Hazel Bishop Inc., Union, N.J. 854,824, pub. 5–28–68. Cl. 51.
Bison Corp., Canton, Ohio. 854,423, pub. 5–28–68. Cl. 4.
Bitoa, Inc., Fort Lauderdale, Fla. 733,457, canc. Cl. 38.
Blackburn, Jasper, Corp. : *See*—
  International Telephone & Telegraph Corp.
Blair Laboratories, Inc., New York, N.Y. 733,295, canc. Cl. 18.
Blecher, Geo. E., Co., Stoughton, Mass. 854,811, pub. 5–28–68. Cl. 50.
Bloch Bros. Tobacco Co., The, Wheeling, W. Va. 733,288–90, canc. Cl. 17.
Block Drug Co., Inc., Jersey City, N.J. 854,831, pub. 5–28–68. Cl. 51.
Blue Ribbon Products Co., Inc., San Francisco, Calif. 854,845, pub. 5–28–68. Cl. 52.
Blumenthal, Eugene A., San Francisco, Calif. 854,904, pub. 5–28–68. Cl. 107.
Bondo Corp., The, Northford, Conn. 854,463, pub. 5–28–68. Cl. 12.
Bonne Bell, Inc., Lakewood, Ohio. 854,816, pub. 4–30–68. Cl. 51.

Borden Co., The, New York, N.Y. 854,826, pub. 5-28-68. Cl. 51.
Borg-Warner Corp., Chicago, Ill. 733,485, canc. Cl. 44.
Borg-Warner Corp., from Borg-Warner Corp., Chicago, Ill. 854,710, pub. 5-28-68. Cl. 42.
Bostwick Steel Lath Co., The, Niles, Ohio. 503,441-3, ren. 8-13-68. Cl. 12.
Bovril (Canada) Ltd., Pointe Claire, Quebec, Canada. 854,-747, pub. 5-28-68. Cl. 46.
Brass-Craft Mfg. Co., Detroit, Mich. 854,493, pub. 5-28-68. Cl. 13.
Bristol-Myers Co., New York, N.Y. 854,833, pub. 5-28-68. Cl. 51.
British Industries Corp., Westbury, N.Y. 854,547, pub. 5-28-68. Cl. 21.
Brown Co., New York, N.Y. 854,466, pub. 5-28-68. Cl. 12.
Brown Co., Holyoke, Mass. 854,920. Cl. 37.
Burger Barn Corp., Kings Mountain, N.C. 854,859-61, pub. 5-28-68. Cl. 100.
Burlington Industries, Inc., New York, N.Y. 733,468, canc. Cl. 39.
Burlington Industries, Inc., Bridgeport, Pa. 854,712-14, pub. 5-28-68. Cl. 42.
Burlington Industries, Inc., New York, N.Y. 854,716-17, pub. 5-28-68. Cl. 42.
Cable Raincoat Co., Boston, Mass. 503,834, ren. 8-13-68. Cl. 39.
California Aerosol Co., Los Angeles, Calif. 854,520, pub. 5-28-68. Cl. 16.
Camalier & Buckley, Inc., Washington, D.C. 854,882-3, pub. 5-28-68. Cl. 101.
Cambridge Paper Box Co., Cambridge, Mass. 244,184, ren. 8-13-68. Cl. 2.
Camey, Lidya, New York, N.Y. 733,449, canc. Cl. 38.
Camloc Fastener Corp.: *See—*
Chainbelt, Rex, Inc.
Candymasters Inc., from F & F Laboratories, Inc., Chicago, Ill. 854,755-6, pub. 5-28-68. Cl. 46.
Cannon Mills Co., Kannapolis, N.C. 854,718, pub. 5-28-68. Cl. 42.
Canteen Corp., Chicago, Ill. 854,744, pub. 5-28-68. Cl. 46.
Canton Textile Mills, Inc., Canton, Ga. 854,677, pub. 5-28-68. Cl. 39.
Cape Fear Feed Products, Inc., Fayetteville, N.C. 854,770, pub. 5-28-68. Cl. 46.
Caressa, Inc., Miami, Fla. 854,669, pub. 5-28-68. Cl. 39.
Carolina Co., Inc., d.b.a. The Carolina Soap & Candle Makers, Southern Pines, N.C. 854,510, pub. 5-28-68. Cl. 15.
Carolina Soap & Candle Makers, The: *See—*
Carolina Co., Inc.
Carnation Co., Los Angeles, Calif. 854,409, pub. 5-28-68. Cl. 2.
Caron Corp., New York, N.Y. 854,820, pub. 3-12-68. Cl. 51.
Carpenter Steel Co., The, Reading, Pa. 854,497, pub. 5-28-68. Cl. 14.
Casting Materials Co., Inc., White Plains, N.Y. 854,503, pub. 5-28-68. Cl. 14.
Cartuchos Deportivos de Mexico, S.A., Morelos, Mexico. 854,-451, pub. 5-28-68. Cl. 9.
Celanese Corp.: *See—*
Celanese Corp. of America.
Celanese Corp. of America, to Celanese Corp., New York, N.Y. 243,574-5, ren. 8-13-68. Cl. 1.
Celanese Corp. of America, to Celanese Corp., New York, N.Y. 243,591-2, ren. 8-13-68. Cl. 1.
Chandon Champagne Corp., New York, N.Y. 854,800, pub. 5-28-68. Cl. 47.
Chatham Mfg. Co., Elkin, N.C. 854,711, pub. 5-28-68. Cl. 42.
Chatham Mfg. Co., Elkin, N.C. 854,719, pub. 5-28-68. Cl. 42.
Chef's Orchid Airline Caterers, Inc., Jamaica, N.Y. 854,874, pub. 5-28-68. Cl. 100.
Cheri Lamb Inc., Leawood, Kans. 854,682, pub. 5-28-68. Cl. 39.
Cheng, Edwin W. A., d.b.a. Exotic Foods Co., San Franscisco, Calif. 854,771, pub. 5-28-68. Cl. 46.
Chesapeake & Potomac Telephone Co., The, Washington, D.C. 854,649, pub. 5-28-68. Cl. 38.
Chicago Development Corp., Riverdale, Md. 733,272, canc. Cl. 14.
Chicago Mustangs, Inc., Chicago, Ill. 854,902, pub. 5-28-68. Cl. 107.
Children's Bargain Town U.S.A., Inc., Niles, Ill. 854,559, pub. 5-28-68. Cl. 22.
Chitty & Co., Jacksonville, Fla. 502,794, ren. 8-13-68. Cl. 46.
Cityrama Corp., New York, N.Y. 854,895, pub. 5-28-68. Cl. 105.
Clairol Inc., New York, N.Y. 854,815, pub. 3-26-68. Cl. 51.
Clairol Inc., New York, N.Y. 854,823, pub. 5-28-68. Multiple Class (Classes 51 and 52).
Clairol Inc., New York, N.Y. 854,837, pub. 5-28-68. Cl. 51.
Clairol Inc., New York, N.Y. 854,852, pub. 5-28-68. Cl. 52.
Claretian Fathers: *See—*
Congregation of Sons of the Immaculate Heart of Mary.
Clarke, J. N., Ltd., Dublin, Ireland. 854,681, pub. 5-28-68. Cl. 39.
Claybar of Calif., Inc., Los Angeles, Calif. 854,683, pub. 5-28-68. Cl. 39.
Clipper Pyrotechnic Corp., Lynwood, Calif. 854,453, pub. 5-28-68. Cl. 9.
Copley Hill Co. Inc., The, Northfield, Ill. 854,449, pub. 5-28-68. Cl. 8.
Cowles, William F., Inc., Woburn, Mass. 854,415, pub. 5-28-68. Cl. 2.
Coast Empire, Inc., Charlotte, N.C., from C. W. Anderson Hosiery Co., Clinton, S.C. 854,657, pub. 9-20-66. Cl. 39.
Coccagna, Fred J., d.b.a. Industrial Floor Co., Philadelphia, Pa. 854,480, pub. 5-28-68. Cl. 12.
Coleman Co., Inc., The, Wichita, Kans. 854,617, pub. 5-28-68. Cl. 34.
Colorseal Co., Inc., The, Chesterfield, Mo. 733,283, canc. Cl. 16.
Columbia Wire Products Co., Chicago, Ill. 854,555, pub. 5-28-68. Cl. 21.
Columbus Dental Mfg. Co., The, Columbus, Ohio. 244,109, ren. 8-13-68. Cl. 44.
Congregation of Sons of the Immaculate Heart of Mary, d.b.a. Claretian Fathers, Chicago, Ill. 733,444, canc. Cl. 38.
Consolidate Cigar Corp., from Consolidated Cigar Corp., New York, N.Y. 854,523, pub. 5-14-68. Cl. 17.
Construction Techniques, Inc., Cleveland, Ohio. 854,458, pub. 5-28-68. Cl. 12.
Continental Mills, Inc., Philadelphia, Pa., to Gloversville-Continental Mills, Inc., Gloversville, N.Y. 440,632, ren. 8-13-68. Cl. 39.
Continental Oil Co., Ponca City, Okla. 854,507, pub. 5-28-68. Cl. 15.
Continental Oil Co., Ponca City, Okla. 854,849, pub. 5-28-68. Cl. 52.
Coro, Inc., New York, N.Y. 854,605, pub. 5-28-68. Cl. 28.
Countess Mara, Inc., New York, N.Y. 854,676, pub. 5-28-68. Cl. 39.
Cove Vitamin & Pharmaceutical, Inc., Glen Cove, N.Y. 733,-310-14, canc. Cl. 18.
Craft-Net Corp., The, Winter Park, Fla. 854,720, pub. 5-28-68. Cl. 42.
Crescent Chemical Co., Lynwood, Calif. 854,853, pub. 5-28-68. Cl. 52.
Crown Radio Corp., Tokyo, Japan. 854,918. Cl. 36.
Cudahy Co., Phoenix, Ariz. 854,749, pub. 5-28-68. Cl. 46.
Curtis, Helen, Industries, Inc., Chicago, Ill. 854,848, pub. 5-28-68. Cl. 52.
Cusenier (Societe Anonyme de la Grande Distillerie E. Cusenier Fils Aine et Compagnie), Paris, France. 854,803, pub. 5-28-68. Cl. 49.
Cussons, Sons & Co., Ltd., Kersal, Manchester, England. 733,540, canc. Cl. 52.
D'Albora, J. V., Co., Inc.: *See—*
Independent Fruit Growers, Inc.
Dalton Foundries, Inc., The, San Leandro, Calif. 733,344, canc. Cl. 21.
Dan River Mills, Inc.: *See—*
Riverside & Dan River Cotton Mills, Inc.
Dan River Mills, Inc., Danville, Va. 503,976-8, ren. 8-13-68. Cl. 42.
Dandar, Ronald G., d.b.a. Jebbratonic Records, Erie, Pa. 854,626, pub. 5-28-68. Cl. 36.
Daniels Mfg. Co., Rhinelander, Wis. 733,432, canc. Cl. 37.
Darling Valve & Mfg. Co., Williamsport, Pa. 501,668, ren. 8-13-68. Cl. 35.
Davies, Oscar G., to Perry Publications, Inc., Palm Beach, Fla. 241,510, ren. 8-13-68. Cl. 38.
Davmor Industries, Inc., Miami, Fla. 854,405, pub. 5-28-68. Multiple Class (Classes 2, 31, 32, and 34).
Dayco Corp., Dayton, Ohio. 854,611, pub. 5-28-68. Cl. 32.
Decca Ltd., London, England. 854,625, pub. 5-28-68. Cl. 36.
De Laval Co. Ltd., Peterborough, Ontario, Canada. 854,917. Cl. 34.
Dell Publishing Co., Inc., New York, N.Y. 733,447-8, canc. Cl. 38.
Dell Publishing Co., Inc., New York, N.Y. 733,452, canc. Cl. 38.
Deseret Pharmaceutical Co., Inc., Sandy, Utah. 854,724-7, pub. 5-28-68. Cl. 44.
Deutsche Fibrit Gesellschaft Ebers & Dr. Muller m.b.H., Krefeld Germany. 733,407, canc. Cl. 32.
Dexter Corp., The, Windsor Locks, Conn. 854,429, pub. 5-28-68. Cl. 5.
Diamond Crystal Salt Co., St. Clair, Mich. 854,759, pub. 3-5-68. Cl. 46.
Diamond Shamrock Corp., Cleveland, Ohio. 854,446, pub. 5-28-68. Cl. 6.
Dietz, R. E., Co., Syracuse, N.Y. 733,519, canc. Cl. 50.
Dimension Productions, Ltd., New York, N.Y. 854,905, pub. 5-28-68. Cl. 107.
Diversey Corp., The, Chicago, Ill. 503,862, ren. 8-13-68. Cl. 52.
Diversey Corp., The, Chicago, Ill. 503,867, ren. 8-13-68. Cl. 4.
Dixon, Joseph, Crucible Co., The, Jersey City, N.J. 441,263, ren. 8-13-68. Cl. 12.
Don Sophisticates, Inc., New York, N.Y. 854,691, pub. 5-28-68. Cl. 39.
Don's Chuck Wagon Products, Inc., East Detroit, Mich. 854,758, pub. 5-28-68. Cl. 46.
Doppelt, Charles, & Co., Inc., Chicago, Ill. 854,420, pub. 5-28-68. Cl. 3.
Dorman Products, Inc., Cincinnati, Ohio. 854,482, pub. 5-28-68. Cl. 13.
Doughboy Industries, Inc., New Richmond, Wis. 854,561, pub. 5-28-68. Cl. 22.
Draper, L. A., & Son, Inc., Anniston, Ala. 854,500, pub. 5-28-68. Cl. 14.
Drummond Knitwear Ltd., Maspeth, N.Y. 854,685, pub. 5-28-68. Cl. 39.
Dubl'-Take Greetings: *See—*
Slovacek, Joe.
Duffy-Mott Co., Inc., New York, N.Y. 854,775, pub. 5-28-68. Cl. 46.
Du Pont de Nemours, E. I., & Co., Wilmington, Del. 503,214, ren. 8-13-68. Cl. 6.
Dura Steel Products Co., Los Angeles, Calif. 733,412, canc. Cl. 32.

Durkee Famous Foods: *See—*
SCM Corp.
Dusharme Products, Inc., Minneapolis, Minn. 854,850, pub. 5-28-68. Cl. 52.
Dynaco, Inc., Philadelphia, Pa. 733,347, canc. Cl. 21.
E & J Mfg. Co., Glendale, Calif., to Air Reduction Co., Inc., New York, N.Y. 439,924, ren. 8-13-68. Cl. 44.
Eastman Kodak Co., Rochester, N.Y. 854,443, pub. 5-28-68. Cl. 6.
Electralab Printed Electronics Corp., Needham Heights, Mass. 733,351, canc. Cl. 21.
Electro Engineering Products Co., Inc., Chicago, Ill. 854,564, pub. 5-28-68. Cl. 23.
Eloesser-Heynemann Co., South San Francisco, Calif. 854,-703, pub. 5-28-68. Cl. 39.
Elox Corp.: *See—*
Elox Inc.
Elox Inc., from Elox Corp., Troy, Mich. 854,551, pub. 5-28-68. Cl. 21.
Emsco Derrick & Equipment Co., Los Angeles, Calif., to *The* Youngstown Sheet & Tube Co., Youngstown, Ohio. 502,749, ren. 8-13-68. Cl. 103.
Endicott Johnson Corp., Endicott, N.Y. 854,678, pub. 5-28-68. Cl. 39.
Engelhard Minerals & Chemicals Corp.: *See—*
Wilson, H. A., Co., The.
Enjay Chemical Co.: *See—*
National Plastic Products Co., The.
Epic Chemicals, Inc., Brooklyn, N.Y. 854,517, pub. 5-28-68. Cl. 16.
Essington Mfg. Co. Inc., Essington, Pa. 854,583, pub. 5-28-68. Cl. 23.
Evangelistic Campaign for Christ, Inc., The, Philadelphia, Pa. 854,863, pub. 5-28-68. Cl. 100.
Evyan Perfums, Inc.: *See—*
Westall, Evelyn.
Executive Secretaries, Inc., Bridgeport, Conn. 854,879, pub. 5-28-68. Cl. 101.
Exeter Fruit Association, Exeter, Calif. 854,788, pub. 5-28-68. Cl. 46.
Exotic Foods Co.: *See—*
Cheng, Edwin W. A.
Extrudo-Film Corp., New York, N.Y. 733,209, canc. Cl. 1.
F & F Laboratories, Inc.: *See—*
Candymasters Inc.
FS Services, Inc., Bloomington, Ill. 854,856, pub. 5-28-68. Multiple Class (Classes 100 and 101).
Faberge, Inc., New York, N.Y., from L. T. York Co., Kansas City, Mo. 854,814, pub. 5-28-68. Cl. 51.
Fabrique d'Horlogerie Lemania Lugrin S.A., l'Orient, Vallee de Joux, Switzerland. 441,326, ren. 8-13-68. Cl. 27.
Facelle Co. Ltd.: *See—*
National Cellulose Corp.
Fairchild Camera & Instrument Corp., Syosset, N.Y. 854,807, pub. 5-28-68. Cl. 50.
Family Service Association of America New York, N.Y. 854,-865, pub. 5-28-68. Cl. 100.
Far Best Corp.: *See—*
Rodman Chemical Co.
Farr Bros. Co., Allentown, Pa. 247,187, ren. 8-13-68. Cl. 39.
Favorite Foods, Inc., Fullerton, Calif. 854,760, pub. 5-28-68. Cl. 46.
Fieldcrest Mills, Inc.: *See—*
Marshall Field & Co.
Fieldcrest Mills, Inc., Spray, N.C. 733,482, canc. Cl. 42.
Fieldcrest Mills, Inc., Spray, N.C. 854,707, pub. 5-28-68. Cl. 42.
Filtered Rosin Products Co., St. Louis, Mo. 733,242, canc. Cl. 12.
Financial Programs, Inc., Denver, Colo. 854,889, pub. 5-28-68. Cl. 102.
Firestone Tire & Rubber Co., The, Akron, Ohio. 439,160-1, ren. 8-13-68. Cl. 42.
Firestone Tire & Rubber Co., The, Akron, Ohio. 854,432, pub. 5-28-68. Cl. 6.
Firth Cleveland Fastenings Ltd., Glamorganshire, Wales. 854,-491, pub. 5-28-68. Cl. 13.
Firth Sterling Corp., from Firth Sterling, Inc., Pittsburgh, Pa. 854,498, pub. 5-28-68. Cl. 14.
Firth Sterling, Inc.: *See—*
Firth Sterling Corp.
Firth-Sterling Steel Co.
Firth-Sterling Steel Co., McKeesport, to Firth Sterling Inc., Pittsburgh, Pa. 243,330, ren. 8-13-68. Cl. 14.
Fisher Radio Corp., Long Island City, N.Y. 854,544, pub. 5-28-68. Cl. 21.
Fishman, Louis, & Co. Inc., Chicago, Ill. 854,619, pub. 5-28-68. Cl. 35.
Flavor Corp. of America, Northbrook, Ill. 503,394, ren. 8-13-68. Cl. 46.
Flex-O-Glass, Inc., Chicago, Ill. 854,401, pub. 5-28-68. Cl. 1.
Flint River Mills, Inc., Tallahassee, Fla. 854,527, pub. 4-16-68. Cl. 18.
Florida Sea Brine Laboratories, Inc., Lakeland, Fla. 733,586, canc. Cl. 6.
Flugger, Ray T., Novato, Calif. 854,913. Cl. 23.
Food-Pak: *See—*
Kanaga, Amos R.
Ford Motor Co., Dearborn, Mich. 854,536, pub. 5-28-68. Cl. 19.
Foremost Dairies, Inc., San Francisco, Calif. 733,489, canc. Cl. 45.
Foremost-McKesson, Inc., San Francisco, Calif. 854,773, pub. 5-28-68. Cl. 46.
Forrest Industries, Inc., Dillard, Oreg. 733,251-2, canc. Cl. 12.
Fort Dodge Laboratories, Inc., Fort Dodge, Iowa, to American Home Products Corp., New York, N.Y. 501,389, ren. 8-13-68. Cl. 18.
Foster Beef Co., d.b.a. Foster's of Manchester, Manchester, N.H. 854,736, pub. 5-28-68. Cl. 46.
Foster's of Manchester: *See—*
Foster Beef Co.
40-Fathom Seafoods, Inc., Chestnut Hill, Mass. 854,740, pub. 4-9-68. Cl. 46.
Frontier Refining Co., The, Denver, Colo. 854,505, pub. 5-28-68. Cl. 15.
Fuller Brush Co., The, East Hartford, Conn. 854,647, pub. 5-28-68. Cl. 38.
Gallo, E. & J., Winery, d.b.a. Gallo Vineyards, Modesto, Calif. 854,802, pub. 5-28-68. Cl. 47.
Gallo Vineyards: *See—*
Gallo, E. & J., Winery.
Gardner Mfg. Co., Horicon, Wis. 733,352, canc. Cl. 21.
Garlock Inc.: *See—*
U.S. Gasket Co.
Garrett Corp., The, Los Angeles, Calif. 501,442, ren. 8-13-68. Cl. 26.
Garvin Bros., Inc., South Bend, Ind. 733,378, canc. Cl. 23.
General Aniline & Film Corp., New York, N.Y. 854,416, pub. 5-28-68. Cl. 2.
General Dynamics Corp., New York, N.Y. 733,394, canc. Cl. 23.
General Mills, Inc., Minneapolis, Minn. 854,790-3, pub. 5-28-68. Cl. 46.
General Numismatics Corp., Yeadon, Pa. 854,924. Cl. 50.
Gerber Products Co., Fremont, Mich. 854,767, pub. 5-28-68. Cl. 46.
Gessner Products Co., Inc., Ambler, Pa. 854,910. Cl. 2.
Getz Prescription Co., Kansas City, Mo. 733,599, canc. Cl. 101.
Gifford, C. M., & Sons: *See—*
Westgate-California Corp.
Gilbert, A. C., Co., The, New Haven, Conn. 733,368, canc. Cl. 22.
Gilster Milling Co.: *See—*
Gilster Milling Co., Inc.
Gilster Milling Co., Inc., d.b.a. Gilster Milling Co., Chester, Ill. 733,508, canc. Cl. 46.
Glidden Co., The: *See—*
SCM Corp.
Gloversville-Continental Mills, Inc.: *See—*
Continental Mills, Inc.
Glyco Chemicals, Inc.: *See—*
Glyco Products Co., Inc.
Glyco Products Co., Inc., Brooklyn, N.Y., to Glyco Chemicals, Inc., New York, N.Y. 500,963, ren. 8-13-68. Cl. 6.
Gojer, Inc., Akron, Ohio. 854,504, pub. 5-28-68. Multiple Class (Classes 15 and 52).
Gold Seal Rubber Co., Boston, Mass. 854,679, pub. 5-28-68. Cl. 39.
Golden Kernel, Inc., Easton, Pa. 854,782, pub. 5-28-68. Cl. 46.
Golmar Sales Corp., Baltimore, Md. 733,265, canc. Cl. 13.
Goodwill Industries of America, Inc., Washington, D.C., from Morgan Memorial, Inc., Boston, Mass. 854,872, pub. 5-28-68. Cl. 100.
Grace, W. R., & Co., New York, N.Y. 854,462, pub. 5-28-68. Cl. 12.
Grace, W. R., & Co., New York, N.Y., from Leaf Brands, Inc., Chicago, Ill. 854,731, pub. 4-5-66. Cl. 46.
Grace, W. R., & Co., New York, N.Y. 854,869, pub. 5-28-68. Cl. 100.
Graham Co., Inc., The, New York, N.Y. 854,783, pub. 5-28-68. Cl. 46.
Granary, The: *See—*
Howard, P. Steele.
Gray Realty Corp., Chicago, Ill. 733,215, canc. Cl. 6.
Great Atlantic & Pacific Tea Co., Inc., The: *See—*
Great Atlantic & Pacific Tea Co., The.
Great Atlantic & Pacific Tea Co., The, to The Great Atlantic & Pacific Tea Co., Inc., New York, N.Y. 500,063, ren. 8-13-68. Cl. 46.
Great Atlantic & Pacific Tea Co., The, to The Great Atlantic & Pacific Tea Co., Inc., New York, N.Y. 500,136, ren. 8-13-68. Cl. 46.
Great Atlantic & Pacific Tea Co., The, to The Great Atlantic & Pacific Tea Co., Inc., New York, N.Y. 500,151, ren. 8-13-68. Cl. 46.
Great Atlantic & Pacific Tea Co., The, to The Great Atlantic & Pacific Tea Co., Inc., New York, N.Y. 500,447, ren. 8-13-68. Cl. 46.
Great Atlantic & Pacific Tea Co., Inc., The, New York, N.Y. 854,753, pub. 5-28-68. Cl. 46.
Greenwood Mills, Inc., New York, N.Y. 854,722, pub. 5-28-68. Cl. 43.
Grogan, Garner H.: *See—*
Security Electric Corp.
Grundig Werke G.m.b.H., Bavaria, Germany. 854,621, pub. 5-28-68. Cl. 36.
Guardian Life Insurance Co. of America, The, from The Airways Club, Inc., New York, N.Y. 733,559, canc. Cl. 102.
Gurian, Edward E., & Co., Inc., Chicago, Ill. 733,356, canc. Cl. 21.
Halle, Roger J., Pound Ridge, N.Y. 854,473, pub. 5-28-68. Cl. 12.
Hallmark Cards, Inc., Kansas City, Mo. 854,923. Cl. 50.
Hamersley Paper Mills, Inc., Garfield, N.J. 854,631, pub. 4-9-68. Cl. 37.
Hammermill Paper Co., Erie, Pa. 854,637-8, pub. 5-28-68. Cl. 37.
Hanimex Pty. Ltd., New South Wales, Australia. 854,601-2, pub. 5-28-68. Cl. 26.
Hargis, Bill, Borger, Tex. 733,328, canc. Cl. 19.

Harley-Davidson Motor Co., Milwaukee, Wis. 733,333, canc. Cl. 19.

Harris, Frieda A., d.b.a. The Ketchard Kitchens, Southampton, N.Y. 854,795, 5-28-68. Cl. 46.

Harris Metals, Inc., Racine, Wis. 854,900, pub. 5-28-68. Cl. 106.

Hart, H. W., Mfg. Co., Glendale, Calif. 854,805, pub. 5-28-68. Cl. 50.

Hastings & Co., Inc., Philadelphia, Pa. 854,400, pub. 5-28-68. Multiple Class (Classes 1 and 14).

Hayes-Sammons Chemical Co., Mission, Tex. 733,221, canc. Cl. 6.

Hazel-Sylvia : *See*—
Ransom-Potts, Hazel.

Heald Machine Co., The, to The Heald Machine Co., Worcester, Mass. 248,760, ren. 8-13-68. Cl. 23.

Heath, Inc., Richmond, Mich. 854,557, pub. 5-28-68. Cl. 21.

Heath Spring & Notion Co. Ltd., The, Redditch, England. 246,713, ren. 8-13-68. Cl. 39.

Hedwin Corp., New York, N.Y. 854,411, pub. 5-28-68. Cl. 2.

Heil Co., The, Milwaukee, Wis. 854,582, pub. 5-28-68. Cl. 23.

Helmac Products Corp., Flint, Mich. 854,915. Cl. 29.

Henry, Leonard, & Thomas, Inc. : *See*—
Linkman, M., & Co.

Herger, Bernardo, Rio Piedras, Puerto Rico. 854,622, pub. 5-28-68. Cl. 36.

Herrli, Peter, New York, N.Y. 854,413, pub. 5-28-68. Cl. 2.

Hi-G Inc., Windsor Locks, Conn. 854,539, pub. 5-31-66. Cl. 21.

Hi-Lo Oil Co. : *See*—
Hodges Development Co.

Hipotronics, Inc., Brewster, N.Y. 854,549, pub. 5-28-68. Multiple Class (Classes 21 and 26).

Hodges Development Co., d.b.a. Hi-Lo Oil Co., Atlanta, Ga. 854,893, pub. 5-28-68. Cl. 103.

Home Gas Co., to Home Gas Co., Inc., Minneapolis, Minn. 439,307, ren. 8-13-68. Cl. 6.

Home Gas Co., Inc. : *See*—
Home Gas Co.

Homeline Corp. : *See*—
U.S. Envelope Co.

Hood, H. P., & Sons : *See*—
Hood, H. P., & Sons, Inc.

Hood, H. P., & Sons, Inc., d.b.a. H. P. Hood & Sons, Boston, Mass. 854,779, pub. 5-28-68. Cl. 46.

Hooker Chemical Corp., Niagara Falls, N.Y. 854,396, pub. 5-28-68. Multiple Class (Classes 1 and 6).

Horlacher Brewing Co., Allentown, Pa. 733,517, canc. Cl. 48.

Hough Mfg. Corp., Janesville, Wis. 733,259, canc. Cl. 12.

Howard, P. Steele, d.b.a. The Granary, Fredericktown, Md. 854,867, pub. 5-28-68. Cl. 100.

Hubbard-Hall Chemical Co., The, Waterbury, Conn. 733,233, canc. Cl. 10.

Hudnut, Richard, Morris Plains, N.J. 733,524, canc. Cl. 51.

Hudson National, Inc., New York, N.Y. 854,542, pub. 5-28-68. Cl. 21.

Hure, M., & Sons : *See*—
Super Food Services, Inc.

Hure, Mike, & Sons : *See*—
Super Food Services, Inc.

Ideal Fastener Corp., Long Beach, N.Y. 854,483, pub. 5-28-68. Cl. 13.

Impact Products, Inc. : *See*—
Sinclair Mfg. Co., The.

Imperial Chemical Industries Ltd., London, England. 854,506, pub. 5-28-68. Cl. 15.

Independent Fruit Growers, Inc., New York, N.Y., to J. V. D'Albora Co., Inc., Cocoa, Fla. 242,215, ren. 8-13-68. Cl. 46.

Index Publishing Corp., Chicago, Ill. 854,921. Cl. 38.

Industrial Corp. of America, Quakertown, Pa. 733,247, canc. Cl. 12.

Industrial Floor Co. : *See*—
Coccagna, Fred J.

Infrared Industries, Inc., Waltham, Mass. 733,340-1, canc. Cl. 21.

International Alliance of Theatrical Stage Employes & Moving Picture Machine Operators of the U.S. & Canada, New York, N.Y. 439,790, ren. 8-13-68. Cl. 38.

International Controls Corp., Fairfield, N.J. 854,485, pub. 5-28-68. Cl. 13.

International Minerals & Chemical Corp., Skokie, Ill. 854,745, pub. 5-28-68. Cl. 46.

International Paint Co., Inc., New York, N.Y. 854,460, pub. 4-16-68. Cl. 12.

International Telephone & Telegraph Corp., from International Telephone & Telegraph Corp., New York, N.Y. 854,556, pub. 5-28-68. Cl. 21.

International Telephone & Telegraph Corp., New York, N.Y., from Jasper Blackburn Corp., St. Louis, Mo. 854,558, pub. 5-28-68. Cl. 21.

Iselin-Jefferson Co., Inc., New York, N.Y. 500,329, ren. 8-13-68. Cl. 42.

Ives, H. B., Co., The, New Haven, Conn. 503,056, ren. 8-13-68. Cl. 25.

Jackson & Perkins Co., Medford, Oreg. 854,397, pub. 5-28-68. Multiple Class (Classes 1, 6, and 10).

Jancyn Mfg. Corp., East Northport, N.Y. 854,854, pub. 5-28-68. Cl. 52.

Jan-Mar Industries, Union, N.J. 854,424, pub. 5-28-68. Cl. 4.

Jebbratonic Records : *See*—
Dandar, Ronald G.

Jerrold Electronics Corp., Philadelphia, Pa. 854,546, pub. 5-28-68. Cl. 21.

Jewell, J. D., Inc., Gainesville, Ga. 854,732, pub. 5-28-68. Cl. 46.

Johns-Manville Corp., New York, N.Y. 854,469, pub. 5-28-68. Cl. 12.

Johnson & Co., Snohomish, Wash. 854,596, pub. 1-23-68. Cl. 26.

Johnson & Johnson, New Brunswick, N.J. 854,606, pub. 5-28-68. Cl. 29.

Johnson, S. C., & Son, Inc., Racine, Wis. 854,844, pub. 5-28-68. Cl. 52.

Jones, Frank M., Sidell, Ill. 502,765, ren. 8-13-68. Cl. 18.

Jones, William S., d.b.a. Wesjay Laboratories, Alexandria, Va. 854,827, pub. 5-28-68. Cl. 51.

Jordan Sales Co., Memphis, Tenn. 733,587, canc. Cl. 12.

Jorgensen, Earle M., Co., Los Angeles, Calif. 733,269, canc. Cl. 14.

Joyce, Inc., Cincinnati, Ohio. 854,687, pub. 5-28-68. Cl. 39.

Kabushiki Kaisha Tanaka-Kameshichi Kojo, Niigata-Ken, Japan. 854,584, pub. 5-28-68. Cl. 23.

Kanaga, Amos R., d.b.a. Food-Pak, San Mateo, Calif. 854,911. Cl. 2.

Kasser, Norman J., Jenkintown, Pa. 854,875, pub. 5-28-68. Cl. 100.

Katone Corp., New York, N.Y. 854,552, pub. 5-28-68. Cl. 21.

Kay, Shari, Products Co. : *See*—
Realistic Co., The.

Kayser-Roth Corp., New York, N.Y., from Western Textile Co. Inc., Chicago, Ill. 854,705, pub. 5-30-67. Cl. 42.

Kellogg Company, Battle Creek, Mich. 854,794, pub. 5-28-68. Cl. 46.

Kellogg Seed Co., Milwaukee, Wis. 246,685, ren. 8-13-68. Cl. 1.

Kenland Co., The, Louisville, Ky. 733,443, canc. Cl. 38.

Ketchard Kitchens, The : *See*—
Harris, Frieda A.

Kile, James C., Clinton, Tenn. 854,399, pub. 5-28-68. Cl. 1.

Kilroy's World Travel Bureaus, Inc., Jersey City, N.J. 854,894, pub. 5-28-68. Cl. 105.

Kim Color, Inc., Hialeah, Fla. 854,899, pub. 12-5-67. Cl. 106.

Kimbal Piano & Organ Co., Jasper, Ind. 854,919. Cl. 36.

Kimberly-Clark Corp., Neenah, Wis. 854,634, pub. 5-28-68. Cl. 37.

Kimberly-Clark Corp., Neenah, Wis. 854,706, pub. 5-28-68. Cl. 42.

King Kullen Grocery Co., Inc., Westbury, N.Y. 854,785, pub. 5-28-68. Cl. 46.

King Refrigerator Corp., Glendale, N.Y. 854,607, pub. 5-28-68. Cl. 31.

Kleinert, I. B., Rubber Co., New York, N.Y. 501,212, ren. 8-13-68. Cl. 42.

Kleinert, I. B., Rubber Co., New York, N.Y. 733,471, canc. Cl. 39.

Klen Way, Inc., Columbia, S.C. 854,847, pub. 5-28-68. Cl. 52.

Koree, Jean C., to Chas. Pfizer & Co., Inc., New York, N.Y. 500,930, ren. 8-13-68. Cl. 18.

Kresge, S. S., Co., Detroit, Mich. 854,585, pub. 5-28-68. Cl. 23.

Kresge, S. S., Co., Detroit, Mich. 854,876, pub. 5-28-68. Cl. 101.

Kresky Mfg. Co., Inc., Petaluma, Calif. 503,863, ren. 8-13-68. Cl. 34.

Krull, Alan R., d.b.a. Alan R. Krull & Co., Chicago, Ill. 733,598, canc. Cl. 101.

Krull, Alan R., & Co. : *See*—
Krull, Alan R.

L. & S. Packing Co., Inc., Flushing, N.Y. 854,769, pub. 5-28-68. Cl. 46.

Lakeside Industries, Inc., Minneapolis, Minn. 854,562, pub. 5-28-68. Cl. 22.

La Maur, Inc., Minneapolis, Minn. 854,818, pub. 5-28-68. Cl. 51.

Lane Ltd., by change of name from Lane Tobacco, Ltd., New York, N.Y., to Reemtsma Cigarettenfabriken G.m.b.H., Hamburg, Germany. 501,427, ren. 8-13-68. Cl. 8.

Lane, Toby, Inc., St. Louis, Mo. 854,673, pub. 5-28-68. Cl. 39.

Langston Bag Co., Memphis, Tenn. 854,406, pub. 5-28-68. Cl. 2.

Languein, Faye N. : *See*—
Vermex Co. of America.

La Preferida, Inc., Chicago, Ill. 854,733, pub. 5-28-68. Cl. 46.

Laviale, Roger, Ltd., New York, N.Y. 854,721, pub. 5-28-68. Cl. 42.

Lazier, J. F., Mfg. Co., St. Louis, Mo. 854,730, pub. 5-28-68. Cl. 45.

Leaf Brands, Inc. : *See*—
Grace, W. R., & Co.

Learning Foundations International, Inc., Athens, Ga. 854,903, pub. 5-28-68. Cl. 107.

Lee, George, & Sons Ltd., Wakefield, England. 503,238, ren. 8-13-68. Cl. 43.

Lee, H. D., Co., Inc., The, Shawnee Mission, Kans. 854,693, pub. 5-28-68. Cl. 39.

Lehman Bros. Corp., Jersey City, N.J. 854,518, pub. 5-28-68. Cl. 16.

Lektra Laboratories, Inc., College Point, N.Y. 854,597, pub.

Lincoln, Gilbert, Hartford, Conn. 854,812, pub. 5-28-68.
5-28-68. Cl. 26.
Cl. 50.

Lincourt, Jean, Inc., New York, N.Y. 733,467, canc. Cl. 39.

Lindenberg, Morris, d.b.a. Linrose Fabrics Co., New York, N.Y. 854,708, pub. 5-28-68. Cl. 42.

Lindy Pen Co., Inc., North Hollywood, Calif. 854,636, pub. 5-28-68. Cl. 37.

Linguaphone Institute Ltd., London, England. 854,620, pub. 5-28-68. Cl. 36.

Linkman, M., & Co., Chicago, Ill., to Henry, Leonard, & Thomas, Inc., Greensboro, N.C. 500,710, ren. 8-13-68. Cl. 8.

Linrose Fabrics Co. : *See*—
Lindenberg, Morris.

Liqui-Box Corp., Columbus, Ohio. 854,407, pub. 5-28-68. Cl. 2.

Litton Business Systems, Inc., New York, N.Y., from Royal Typewriter Co., Inc., Greenwich, Conn. 854,593, pub. 5-28-68. Cl. 26.

Litton Business Systems, Inc., from Monroe International, Inc., Orange, N.J. 854,598, pub. 5-28-68. Cl. 26.

Littonian Shoe Co., Littlestown, Pa. 854,690, pub. 5-28-68. Cl. 39.

Lord Ashley, Ltd., New York, N.Y. 854,660, pub. 5-28-68. Cl. 39.

L'Oreal, Paris, France. 854,821, pub. 5-28-68. Cl. 51.

Louket Markets Inc., from Neighborhood Markets, Inc., Jersey City, N.J. 854,884, pub. 2-27-68. Cl. 101.

Lowe's Companies, Inc., North Wilkesboro, N.C. 854,461, pub. 5-28-68. Cl. 12.

M.P.H. Mfg. Corp., Inc., Chicago, Ill. 733,249, canc. Cl. 12.

M & W Iron Works Inc., Deerfield Beach, Fla. 854,890, pub. 5-28-68. Cl. 103.

Maclevy Sports Equipment Corp. : *See*—
Tumble-King International, Inc.

Magazine Management Co., d.b.a. Marvel Comics Group, New York, N.Y. 854,655, pub. 5-28-68. Cl. 38.

Magnavox Co., The, Fort Wayne, Ind. 854,545, pub. 5-28-68. Multiple Class (Classes 21 and 36).

Maidenform, Inc., New York, N.Y. 854,694-702, pub. 5-28-68. Cl. 39.

Mallinckrodt Chemical Works, St. Louis, Mo. 503,735, ren. 8-13-68. Cl. 18.

Manufacturers Marketing Co., U.S.A., Inc., New York, N.Y. 854,839, pub. 5-28-68. Cl. 51.

Mara Countess, Inc., New York, N.Y. 854,418, pub. 5-28-68. Multiple Class (Classes 3, 28, 39, 51, and 52).

March & Mendl Inc., New York, N.Y. 733,594, canc. Cl .39.

Mar-Ko Co., Topeka, Kans. 854,751-2, pub. 5-28-68. Cl. 46.

Marks Polarized Corp., Whitestone, N.Y. 854,548, pub. 5-28-68. Cl. 21.

Marshall Field & Co., Chicago, Ill., to Fieldcrest Mills, Inc., Eden, N.C. 502,482, ren. 8-13-68. Cl. 42.

Martin, James N., Jr., d.b.a. Best Equipment & Supply Co., San Antonio, Tex. 854,615, pub. 5-28-68. Cl. 34.

Martin Rubber Co., Overland Park, Kans. 854,486, pub. 5-28-68. Cl. 13.

Marvel Comics Group : *See*—
Magazine Management Co.

Marvella, Inc., New York, N.Y. 854,604, pub. 5-28-68. Cl. 28.

Masco Products, Inc., Chicago, Ill. 733,257, canc. Cl. 12.

Mastic Corp., South Bend, Ind. 854,476-7, pub. 5-28-68. Cl. 12.

Maxwell, Selby F., Rev., Watsonville, Calif. 733,439, canc. Cl. 38.

Mayer, Robert S., d.b.a. Power Sales Co., Chicago, Ill. 733,484, canc. Cl. 44.

McGraw-Hill, Inc., New York, N.Y. 854,643, pub. 7-25-67. Cl. 38.

Mead Corp., The, Dayton, Ohio. 854,630, pub. 5-28-68. Cl. 37.

Mead Johnson & Co., Evansville, Ind. 854,530, pub. 5-28-68. Cl. 18.

Medley Distilling Co., to Medley Distilling Co., Owensboro, Ky. 502,966, ren. 8-13-68. Cl. 49.

Mennen Co., The, Morristown, N.J. 854,832, pub. 5-28-68. Cl. 51.

Mepco, Inc., Morristown, N.J. 854,640, pub. 5-28-68. Cl. 38.

Merck & Co., Inc., Rahway, N.J. 854,430, pub. 5-28-68. Cl. 6.

Mesberg, B. G., Corp., New York, N.Y. 733,413, canc. Cl. 32.

Mesberg, B. G., Corp., New York, N.Y. 854,608, pub. 5-28-68. Cl. 32.

Metaframe Corp., from Aquariums Inc., Maywood, N.J. 854,540, pub. 5-2-67. Cl. 21.

Metrawatt Aktiengesellschaft, Nurnberg, Germany. 854,591, pub. 5-28-68. Cl. 26.

Metrolonics, Inc., Burbank, Calif. 733,546, canc. Cl. 100.

Meyer-Mueller-Goodman Co., Inc., St. Louis, Mo. 854,658, pub. 5-28-68. Cl. 39.

Mifflin Chemical Corp., Philadelphia, Pa., to The Mifflin McCambridge Co., Riverdale, Md. 241,140, ren. 8-13-68. Cl. 18.

Mifflin McCambridge Co., The : *See*—
Mifflin Chemical Corp.

Miles Laboratories, Inc. : *See*—
Ames Co., Inc.

Miller, Henrie L., d.b.a. Agri-Data Processing Service, Danville, Ill. 854,877, pub. 5-28-68. Cl. 101.

Miller Protective Coatings, Inc., South Norwalk, Conn. 854,513, pub. 5-28-68. Cl. 16.

Milwaukee Forge & Machine Co., Milwaukee, Wis. 503,400, ren. 8-13-68. Cl. 14.

Mint Maker Inc., Philadelphia, Pa. 733,585, canc. Cl. 2.

Minnesota & Ontario Paper Co., Minneapolis, Minn. 733,245, canc. Cl. 12.

Minolta Camera Kabushiki Kaisha, Osaka, Japan. 854,592, pub. 5-28-68. Cl. 26.

Mirror Bright Polish Co., Pasadena, Calif. 854,425, pub. 5-28-68. Cl. 4.

Mobelfabriken Ernst Kaufmann Kg, Neustadt, Aisch, Germany. 854,610, pub. 5-28-68. Cl. 32.

Mobil Oil Corp., from Socony Mobil Oil Co., Inc., New York, N.Y. 854,403, pub. 5-28-68. Cl. 2.

Mobile Paint Mfg. Co., Inc., Mobile, Ala. 854,511, pub. 5-28-68. Cl. 16.

Modernaid Co. : *See*—
Mustee, E. L., & Sons, Inc.

Mohawk Rubber Co., The, Akron, Ohio. 854,618, pub. 5-28-68. Cl. 35.

Monroe International, Inc. : *See*—
Litton Business Systems, Inc.

Monsanto Co., St. Louis, Mo. 854,431, pub. 5-28-68. Multiple Class (Classes 6 and 15).

Montana, Montie, Jr., Calabasas, Calif. 854,906, pub. 5-28-68. Cl. 107.

Moral Re-Armament, Inc., New York, N.Y. 854,901, pub. 10-17-67. Cl. 107.

More, John D., La Sierra, Calif. 733,355, canc. Cl. 21.

Morgan Memorial, Inc. : *See*—
Goodwill Industries of America, Inc.

Morris, Philip, Inc., New York, N.Y. 733,379, canc. Cl. 23.

Morris, Philip, Inc., New York, N.Y. 854,522, pub. 5-28-68. Cl. 17.

Muerth, Ruth W., d.b.a. The Translip Co., Signal Mountain, Tenn. 733,434, canc. Cl. 37.

Munsingwear, Inc., Minneapolis, Minn. 441,405, ren. 8-13-68. Cl. 39.

Mustee, E. L., & Sons, Inc., d.b.a. Modernaid Co., Cleveland, Ohio. 854,587, pub. 5-28-68. Cl. 24.

Myers, Ellis & Poulakidas, Chicago, Ill. 733,212, canc. Cl. 4.

Nameo Association of Endorsed Businessmen, The, Wellesley, Mass. 854,907, pub. 5-28-68. Cl. 200.

Natec Publications, Inc., New York, N.Y. 733,453, canc. Cl. 38.

National Biscuit Co., New York, N.Y. 854,741, pub. 5-28-68. Cl. 46.

National Biscuit Co., New York, N.Y. 854,763-4, pub. 5-28-68. Cl. 46.

National Biscuit Co., New York, N.Y. 854,768, pub. 5-28-68. Cl. 46.

National Blank Book Co., Inc., Holyoke, Mass. 854,628-9, pub. 5-28-68. Cl. 37.

National Catholic Welfare Conference, Washington, D.C. 733,446, canc. Cl. 38.

National Cellulose Corp., New York, N.Y., to Facelle Co. Ltd., Ontario, Canada. 249,230, ren. 8-13-68. Cl. 44.

National Chemical Corp., West Newton, Mass. 854,514, pub. 5-28-68. Cl. 16.

National Dairy Products Corp., Chicago, Ill. 854,776, pub. 5-28-68. Cl. 46.

National Gypsum Co., Buffalo, N.Y. 733,588, canc. Cl. 12.

National Gypsum Co., Buffalo, N.Y. 854,474, pub. 5-28-68. Cl. 12.

National Ideal Co., The, Hicksville, Ohio. 854,574, pub. 5-28-68. Cl. 23.

National Plastic Products Co., The, Odenton, Md., to Enjay Chemical Co., New York, N.Y. 437,022, ren. 8-13-68. Cl. 1.

National Plastic Products Co., The, Odenton, Md., to Enjay Chemical Co., New York, N.Y. 438,238, ren. 8-13-68. Cl. 12.

National Rosin Oil Products, Inc. : *See*—
Natrochem, Inc.

National Sea Products Ltd., from National Sea Products Ltd., Halifax, Nova Scotia, Canada. 854,743, pub. 5-28-68. Cl. 46.

National Sintered Alloys, Inc., Danbury, Conn. 854,898, pub. 5-28-68. Cl. 106.

National Tuberculosis and Respiratory Disease Assoc., from National Tuberculosis Assoc., New York, N.Y. 854,868, pub. 5-28-68. Cl. 100.

National Tuberculosis Assoc. : *See*—
National Tuberculosis and Respiratory Disease Assoc.

Nationwide Mutual Insurance Co., Columbus, Ohio. 854,888, pub. 5-28-68. Cl. 102.

Natrochem, Inc., from National Rosin Oil Products, Inc., Savannah, Ga. 854,395, pub. 5-28-68. Multiple Class (Classes 1, 6, and 15).

Neighborhood Markets, Inc. : *See*—
Louket Markets Inc.

Neuville & Co., Inc., New York, N.Y. 854,661, pub. 5-28-68. Cl. 39.

New England Carbide Tool Co. Inc., Medford, Mass. 733,591, canc. Cl. 23.

New Process Co., Warren, Pa. 854,692, pub. 5-28-68. Cl. 39.

Newberry, J. J., Co., New York, N.Y. 854,515, pub. 5-28-68. Cl. 16.

Nightowl Publications, Inc., New York, N.Y. 854,654, pub. 5-28-68. Cl. 38.

Nixon-Baldwin Chemicals Inc., Nixon, N.J. 733,206, canc. Cl. 1.

Nordson Corp., Amherst, Ohio. 854,614, pub. 5-28-68. Cl. 34.

Norganic Foods, Inc., San Springs, Okla. 733,511, canc. Cl. 46.

Norris, Camden, Columbus, Miss. 854,866, pub. 5-28-68. Cl. 100.

North Land Mfg., Ltd., New York, N.Y. 854,689, pub. 5-28-68. Cl. 39.

North Star Dairy, St. Paul, Minn. 854,778, pub. 5-28-68. Cl. 46.

Norwich Pharmacal Co., The, Norwich, N.Y. 733,293, canc. Cl. 18.

Novo Industrial Corp., New York, N.Y. 733,399, canc. Cl. 26.

Nuclear Electronics Corp., Philadelphia, Pa. 733,343, canc. Cl. 21.

Nugget Distributors' Cooperative of America Inc., d.b.a. Nugget Distributors, Inc., Stockton, Calif. 854,417, pub. 5-28-68. Cl. 2.

Nugget Distributors, Inc. : *See*—
Nugget Distributors' Cooperative of America Inc.

Nutritional Foods Co. : *See*—
Plus Products.

Nu-Way Mfg. Co., Inc., Barnard, Kans. 854,575, pub. 5-28-68. Cl. 23.

Okonite Co., The, Passaic, N.J. 854,553, pub. 5-28-68. Cl. 21.

Oliver Corp., Chicago, Ill. 854,914. Cl. 23.

Olympia Swim Pool Corp., Asheville, N.C. 733,254, canc. Cl. 12.
Omaro Societe Anonyme, Paris, France. 854,648, pub. 5-28-68. Cl. 38.
Oneida Ltd., Oneida, N.Y. 854,603, pub. 5-28-68. Cl. 28.
One-In-Hand, Inc., Clinton, Iowa. 854,667, pub. 5-28-68. Cl. 39.
Oregon Tax Research, Portland, Oreg. 854,642, pub. 5-28-68. Cl. 38.
Outboard Marine Corp., Waukegan, Ill. 854,532, pub. 5-28-68. Cl. 19.
Owens-Corning Fiberglas Corp., Toledo, Ohio. 733,476, canc. Cl. 42.
PPG Industries, Inc.: *See*—
  Pittsburgh Plate Glass Co.
Palm Beach Co., Portland, Maine. 854,684, pub. 5-28-68. Cl. 39.
Palmer Products Inc., Worcester, Pa. 854,459, pub. 5-28-68. Cl. 12.
Palomino & Vergara, Frontera (Cadiz), Spain. 854,804, pub. 5-28-68. Cl. 49.
Paramount Poultry, Inc., Harbeson, Del. 854,789, pub. 5-28-68. Cl. 46.
Partek Corp., Houston, Tex. 854,566, pub. 5-28-68. Cl. 23.
Patent Reproduction Co., Washington, D.C. 854,880, pub. 5-28-68. Cl. 101.
Patou, Jean, Societe Anonyme, Paris, France. 854,674, pub. 5-28-68. Cl. 39.
Peavey Co.: *See*—
  Peavey, F. H., & Co.
Peavey, F. H., & Co., to Peavey Co., Minneapolis, Minn. 503,385, ren. 8-13-68. Cl. 1.
Pendleton Woolen Mills, Portland, Oreg. 854,686, pub. 5-28-68. Cl. 39.
Perfection Biscuit Co., Fort Wayne, Ind. 70,629, ren. 8-13-68. Cl. 46.
Perry Publications, Inc.: *See*—
  Davies, Oscar G.
Personality Posters, Inc., New York, N.Y. 854,644, pub. 5-28-68. Cl. 38.
Pet Inc., St. Louis, Mo. 854,748, pub. 5-28-68. Cl. 46.
Petersime Incubator Co., Gettysburg, Ohio. 502,879, ren. 8-13-68. Cl. 50.
Pethrine Products, Inc., West Hempstead, N.Y. 854,819, pub. 5-28-68. Cl. 51.
Pfizer, Chas., & Co., Inc., to Chas. Pfizer & Co., Inc., New York, N.Y. 500,650, ren. 8-13-68. Cl. 18.
Pfizer, Chas., & Co., Inc.: *See*—
  Koree, Jean U.
Phy-Ed Apparel Service, Inc., Oak Brook, Ill. 854,670, pub. 5-28-68. Multiple Class (Classes 39 and 51).
Platt & Smillie Chemicals, Inc., St. Louis, Mo. 733,539, canc. Cl. 52.
Piper, Jaffray & Hopwood, Minneapolis, Minn. 854,922. Cl. 38.
Pittsburgh Plate Glass Co., to PPG Industries, Inc., Pittsburgh, Pa. 441,046, ren. 8-13-68. Cl. 33.
Plant Layout Technical Workshop, Inc., Chicago, Ill. 733,576, canc. Cl. 107.
Plunkett Chemical Co., Chicago, Ill. 854,441-2, pub. 5-28-68. Cl. 6.
Plus Products, d.b.a. Nutritional Foods Co., Los Angeles, Calif. 854,738, pub. 5-28-68. Cl. 46.
Powers Regulator Co., The, Skokie, Ill. 854,569, pub. 5-28-68. Cl. 23.
Power Sales Co.: *See*—
  Mayer, Robert S.
Professional Portrait Service, Inc., Minneapolis, Minn. 854,-897, pub. 5-28-68. Cl. 106.
Pronto Food Corp., Chicago, Ill. 854,754, pub. 5-28-68. Cl. 46.
Provincetown Printers, Inc., New York, N.Y. 733,428, canc. Cl. 37.
Przedsiebiorstwo Handlu Zagranicznego "Agros," Warsaw, Poland. 854,796-8, pub. 5-28-68. Cl. 47.
Pujol, Jaime, Santurce, Puerto Rico. 854,668, pub. 5-28-68. Cl. 39.
Pure Oil Co., The, Chicago, Ill., to Union Oil Co. of California, Los Angeles, Calif. 243,822, ren. 8-13-68. Cl. 15.
Purex Corp., Ltd., Lakewood, Calif., from Allen B. Wrisley Co., Chicago, Ill. 733,542-3, canc. Cl. 52.
Purex Corp., Ltd., Lakewood, Calif. 854,448, pub. 5-28-68. Cl. 6.
Pyramid Mills Co., Inc., Bessemer City, N.C. 854,813, pub. 5-28-68. Cl. 50.
Pyro Foam Corp., Oakland, from Bramley Barnes, Daly City, Calif. 854,565, pub. 5-28-68. Cl. 23.
Quality Bakers of America Cooperative, Inc., New York, N.Y. 854,735, pub. 5-28-68. Cl. 46.
Quarter Horse Breeders Publishing Co., Wichita Falls, Tex. 733,436, canc. Cl. 38.
Quickie Mfg. Corp., Philadelphia, Pa. 854,496, pub. 5-28-68. Cl. 13.
R.G.B. Laboratories, Inc., Kansas City, Mo. 854,742, pub. 5-28-68. Cl. 46.
Rahn Granite Surface Plate Co., Dayton, Ohio. 854,595, pub. 5-28-68. Cl. 26.
Raleigh Industries, Ltd., Nottingham, England. 854,531, pub. 5-28-68. Multiple Class (Classes 19 and 22).
Ransom-Potts, Hazel, d.b.a. Hazel-Sylvia, New York, N.Y. 854,672, pub. 5-28-68. Cl. 39.
Realistic Co., The, d.b.a. Shari Kay Products Co., Cincinnati, Ohio. 854,829, pub. 5-28-68. Cl. 51.
Realistic Co., The, Cincinnati, Ohio. 854,834, pub. 5-28-68. Cl. 51.
Reemtsma Cigarettenfabriken G.m.b.H.: *See*—
  Lane Ltd.
Reichhold Chemicals, Inc., White Plains, N.Y. 854,465, pub. 5-28-68. Cl. 12.
Reliable Luggage, Inc., West Pittsburgh, Pa. 854,421, pub. 5-28-68. Cl. 3.
Re-Ox Corp., Lyndhurst, Ohio. 854,433, pub. 5-28-68. Cl. 6.
Reservations/USA, Inc., Jackson, Miss. 854,862, pub. 5-28-68. Cl. 100.
Restaurant & Waldorf Associates, Inc., New York, N.Y. 854,-871, pub. 5-28-68. Cl. 100.
Revere Copper & Brass Inc., New York, N.Y. 854,492, pub. 5-28-68. Cl. 13.
Rex Chainbelt, Inc., Milwaukee, Wis., from Camloc Fastener Corp., Paramus, N.J. 854,487, pub. 5-28-68. Multiple Class (Classes 13 and 23).
Rex Chainbelt, Inc., Milwaukee, Wis. 854,577, pub. 5-28-68. Cl. 23.
Reynolds Metals Co., Richmond, Va. 854,632, pub. 5-28-68. Cl. 37.
Richardson-Merrell Inc., New York, N.Y. 854,528, pub. 4-16-68. Cl. 18.
Riverside & Dan River Cotton Mills, Inc., now by change of name to Dan River Mills, Inc., to Dan River Mills, Inc., Danville, Va. 441,299, ren. 8-13-68. Cl. 42.
Riviana Foods Inc., Houston, Tex. 854,786, pub. 5-28-68. Cl. 46.
Roaring Spring Blank Book Co., Inc., Roaring Spring, Pa. 854,470, pub. 5-28-68. Cl. 12.
Robins, A. H., Co., Inc., Richmond, Va. 854,422, pub. 5-28-68. Cl. 3.
Robins Industries Corp., Flushing, N.Y. 854,623, pub. 5-28-68. Cl. 36.
Rocket Research Corp., Seattle, Wash. 851,855, pub. 9-27-66. Cl. 100.
Rockwell-Standard Corp., Coraopolis, Pa. 733,518, canc. Cl. 50.
Rodman Chemical Co., Verona, Pa., to Far Best Corp., Los Angeles, Calif. 500,505, ren. 8-13-68. Cl. 15.
Rohlwing, Burton W., Azusa, Calif. 733,241, canc. Cl. 12.
Roll-O-Sheets, Inc., St. Louis, Mo. 854,499, pub. 5-28-68. Cl. 14.
Roosevelt Mills Inc., Rockville, Conn. 733,475, canc. Cl. 39.
Ross Laboratories: *See*—
  Abbott Laboratories.
Rossmoor Corp., Laguna Hills, Calif. 854,858, pub. 5-28-68. Cl. 100.
Rota Forg Corp., Chicago, Ill. 854,576, pub. 5-28-68. Cl. 23.
Royal Typewriter Co., Inc.: *See*—
  Litton Business Systems, Inc.
Royster, F. S., Guano Co., Norfolk, Va. 854,457, pub. 5-28-68. Cl. 10.
Rueping, Fred, Leather Co., Fond Du Lac, Wis. 502,543, ren. 8-13-68. Cl. 1.
SCM Corp., New York, N.Y., from The Glidden Co., d.b.a. Durkee Famous Foods, Cleveland, Ohio. 854,746, pub. 5-28-68. Cl. 46.
SKF Industries, Inc., Philadelphia, Pa. 503,884-5, ren. 8-13-68. Cl. 26.
Sabre Carpets, Inc., Cartersville, Ga. 854,715, pub. 5-28-68. Cl. 42.
Sacramento Union Corp., The, Sacramento, Calif. 854,650, pub. 5-28-68. Cl. 38.
Saf-T-Boom, Inc., Little Rock, Ark. 854,586, pub. 5-28-68. Cl. 23.
Sampino, S., & Waverly Beauty Products Inc., d.b.a. Waverly Beauty Products, Brooklyn, N.Y. 854,825, pub. 5-28-68. Cl. 51.
Sams, Kenneth G., Waukegan, Ill. 854,408, pub. 5-28-68. Cl. 2.
Satterwhite, Inc., Lexington, Ky. 733,235, canc. Cl. 10.
Satz, William, Beverly Hills, Calif. 854,404, pub. 5-28-68. Cl. 2.
Sau-Sea Foods, Inc., Yonkers, N.Y. 854,787, pub. 5-28-68. Cl. 46.
Schwab Safe Co., Inc., Lafayette, Ind. 854,588, pub. 5-28-68. Cl. 25.
Schwabacher & Co., San Francisco, Calif. 854,857, pub. 5-28-68. Multiple Class (Classes 100 and 102).
Schwinn Bicycle Co.: *See*—
  Arnold, Schwinn & Co.
Scigliano, Frank V., Revere, Mass. 854,581, pub. 5-28-68. Cl. 23.
Scott Paper Co., Delaware County, Pa. 854,412, pub. 5-28-68. Cl. 2.
Scott, Rey: *See*—
  Scott, Reynolds G.
Scott, Reynolds G., d.b.a. Rey Scott, Fort Lauderdale, Fla. 854,656, pub. 5-28-68. Cl. 38.
Sea & Ski Corp., San Francisco, Calif. 854,675, pub. 5-28-68. Cl. 39.
Security Electric: *See*—
  Security Electric Corp.
Security Electric Corp., from Garner H. Grogan, d.b.a. Security Electric, Pontiac, Mich. 854,541, pub. 5-28-68. Cl. 21.
Selma Trailer & Mfg. Co., Selma, Calif. 854,568, pub. 5-28-68. Cl. 23.
Semtech Corp., Newbury Park, Calif. 854,543, pub. 5-28-68. Cl. 21.
Sexton, John, & Co., Chicago, Ill. 854,761, pub. 5-28-68. Cl. 46.
Shade Business Forms Inc., Green Bay, Wis. 854,633, pub. 5-28-68. Cl. 37.
Shell Oil Co., New York, N.Y. 854,419, pub. 5-28-68. Cl. 3.
Shell Oil Co., New York, N.Y. 854,508-9, pub. 5-28-68. Cl. 15.
Shippers Guide Co., The, New York, N.Y. 854,641, pub. 5-28-68. Cl. 38.
Shiseido Co. Ltd., Tokyo, Japan. 854,841, pub. 5-28-68. Cl. 51.

Shooting Equipment, Inc., Chicago, Ill. 854,519, pub. 5-28-68. Cl. 16.
Shur-Lok Corp., Santa Ana, Calif. 854,495, pub. 5-28-68. Cl. 13.
Sigma-Netics, Inc., Mountain Lakes, N.J. 854,550, pub. 5-28-68. Cl. 21.
Sinclair Mfg. Co., The, from Impact Products, Inc., Toledo, Ohio. 854,842, pub. 1-2-68. Cl. 52.
Sinclair Refining Co., New York, N.Y. 854,891, pub. 5-28-68. Cl. 103.
Sioux Steel Co., Sioux Falls, S. Dak. 854,808, pub. 5-28-68. Cl. 50.
Sitler, Frances S., d.b.a. "Beautiful Business," Falls Church, Va. 733,578, canc. Cl. 107.
Slovacek, Joe, d.b.a. Dubl'-Take Greetings, Pasadena, Tex. 854,653, pub. 5-28-68. Cl. 38.
Smith Kline & French Laboratories, Philadelphia, Pa. 854,438, pub. 5-28-68. Cl. 6.
Smith Kline & French Laboratories, Philadelphia, Pa. 854,600, pub. 5-28-68. Cl. 26.
Snug Harbour Tobacconists, Ltd., New York, N.Y. 854,521, pub. 4-9-68. Cl. 17.
Societa per Azioni Chianti Ruffino Exportazione Vinicola Toscana, Brescia, Italy. 854,801, pub. 5-28-68. Cl. 47.
Societe d'Etudes Verrieres Appliquees, Hauts-de-Seine, France. 854,484, pub. 5-28-68. Cl. 13.
Societe Grenobloise d'Etudes et d'Applications Hydrauliques (Sogreah), Grenoble (Isere), France. 854,567, pub. 5-28-68. Cl. 23.
Socony Mobil Oil Co., Inc.: *See*—
  Mobil Oil Corp.
Sohn, Ernest, Creations, Inc., New York, N.Y. 733,402, canc. Multiple Class (Classes 2 and 30).
Southern Hotel Journal, The, Jacksonville, Fla. 733,455, canc. Cl. 38.
Southern Sizing Co., East Point, Ga. 502,691, ren. 8-13-68. Cl. 6.
Southern Steel & Stove Co., Richmond, Va. 733,420, canc. Cl. 34.
Southland Corp., The, Dallas, Tex. 854,728, pub. 5-28-68. Cl. 45.
Solvig, Conrad, Co., Inc., San Francisco, Calif. 854,516, pub. 5-28-68. Cl. 16.
Spartans Industries Inc., New York, N.Y. 854,663-4, pub. 5-28-68. Cl. 39.
Specialty Glass Co.: *See*—
  Wagenseller, Paul W.
Speed Clean, Inc., Plymouth, Wis. 854,571, pub. 5-28-68. Cl. 23.
Spell-Right Corp., Washington, D.C. 733,238, canc. Cl. 11.
Sports Picture Cards Enterprises, Inc., Plainview, N.Y. 854,-645, pub. 5-28-68. Cl. 38.
Sprague, Fred'k H., Co., Inc., Fitchburg, Mass. 854,666, pub. 5-28-68. Cl. 39.
Sroda, George, d.b.a. Turkey Peat Co., Amherst Junction, Wis. 854,456, pub. 5-28-68. Cl. 10.
Staley, A. E., Mfg. Co., Decatur, Ill. 854,781, pub. 5-28-68. Cl. 46.
Standard Oil Co., The, Cleveland, Ohio. 854,864, pub. 5-28-68. Multiple Class (Classes 100 and 103).
Standard Toch Industries, Inc., Philadelphia, Pa. 733,280, canc. Cl. 16.
Stedman Mfg. Co., Asheboro, N.C. 854,665, pub. 5-28-68. Cl. 39.
Steel Deck Institute, Westchester, Ill. 854,908, pub. 5-28-68. Cl. 200.
Stevens, J. P., & Co., Inc., New York, N.Y. 854,709, pub. 5-28-68. Cl. 42.
Stiefel Laboratories, Inc., Oak Hill, N.Y. 854,817, pub. 5-28-68. Cl. 51.
Stoeger Arms Corp., South Hackensack, N.J. 854,452, pub. 5-28-68. Cl. 9.
Stone Conveyor Co., Inc., Honeoye, N.Y. 854,572, pub. 5-28-68. Cl. 23.
Stone & Forsyth Co.: *See*—
  Universal Packaging Corp.
Stoneman Engineering & Mfg. Co., Inglewood, Calif. 854,489, pub. 5-28-68. Cl. 13.
Stover, Russell, Candies, Inc., Kansas City, Mo. 854,774, pub. 5-28-68. Cl. 46.
Strato Tool Corp., Hanover, N.J. 854,481, pub. 5-28-68. Multiple Class (Classes 13 and 23).
Strecton Industries, Inc., Millbrae, Calif. 854,810, pub. 5-28-68. Cl. 50.
Style Footwear Co., Inc., South Norwalk, Conn. 854,662, pub. 5-28-68. Cl. 39.
Suchard Holding Societe Anonyme, Lausanne, Switzerland. 854,734, pub. 5-28-68. Cl. 46.
Sumitomo Metal Industries, Ltd., Higashi-ku Osaka, Japan. 854,533, pub. 5-28-68. Multiple Class (Classes 19 and 23).
Sun Chemical Corp., New York, N.Y., to The Western Petrochemical Corp., Chanute, Kans. 439,879, ren. 8-13-68. Cl. 15.
Sundstrand Corp., Rockford, Ill. 854,578, pub. 5-28-68. Cl. 23.
Sundstrand Corp., Rockford, Ill. 854,580, pub. 5-28-68. Cl. 23.
Sun-Maid Raisin Growers of California, Kingsburg, Calif. 854,635, pub. 5-28-68. Cl. 37.
Super Food Services, Inc., Chicago, Ill., from Mike Hure & Sons, d.b.a. M. Hure & Sons, Dinuba, Calif. 854,739, pub. 3-28-67. Cl. 46.
Superior Cable Corp.: *See*—
  Superior Continental Corp.
Superior Continental Corp., from Superior Cable Corp., Hickory, N.C. 854,554, pub. 5-28-68. Cl. 21.
Swift & Co., Chicago, Ill. 854,440, pub. 5-28-68. Cl. 6.
Swirl, Inc., Rocky Mount, N.C. 854,838, pub. 5-28-68. Cl. 51.
Symington Wayne Corp., The, Salisbury, Md. 854,535, pub. 5-28-68. Cl. 19.
Synthetic Plastics Co., Newark, N.J. 854,624, pub. 5-28-68. Cl. 36.
Tailorbrooke Clothes, Inc., Kearny, N.J. 854,659, pub. 5-28-68. Cl. 39.
Tak-A-Taco, Inc., Longview, Tex. 854,784, pub. 5-28-68. Cl. 46.
Talon, Inc., Meadville, Pa. 503,739, ren. 8-13-68. Cl. 26.
Talon, Inc., Meadville, Pa. 503,849, ren. 8-13-68. Cl. 28.
Tandy Corp.: *See*—
  Tex Tan of Yoakum.
Tanner Eye Water Co.: *See*—
  Tanner, L. H., Jr.
Tanner, L. H., Jr., administrator of the estate of Oscar Samuel Tanner, d.b.a. Tanner Eye Water Co., Douglas, Ga. 733,292, canc. Cl. 18.
Techni Electronics, Inc., Orange, N.J. 733,486, canc. Cl. 44.
Teenform, Inc., New York, N.Y. 854,688, pub. 5-28-68. Cl. 39.
Teledyne, Inc., Hawthorne, Calif. 854,612, pub. 5-28-68. Cl. 34.
Temperature Processing Co., Inc., North Arlington, N.J. 854,-896, pub. 5-28-68. Cl. 106.
Tenneco Chemicals, Inc., New York, N.Y. 854,445, pub. 5-28-68. Cl. 6.
Tex Tan of Yoakum, Yoakum, to Tandy Corp., Fort Wayne, Tex. 503,153, ren. 8-13-68. Cl. 3.
Texas Instruments Inc., Dallas, Tex. 733,345, canc. Cl. 21.
Texize Chemicals, Inc., Greenville, S.C. 854,512, pub. 5-28-68. Cl. 16.
Thermal-Aire of America, Inc., Newark, N.J. 733,337, canc. Cl. 21.
Thomae, Karl, Dr., G.m.b.H., Biberach An Der Riss, Germany. 733,318-19, canc. Cl. 18.
Thompson, Court, Omaha, Nebr. 854,534, pub. 5-28-68. Cl. 19.
Thompson-Hayward Chemical Co., Kansas City, Kans. 854,-439, pub. 5-28-68. Cl. 6.
Thomson Industries, Inc., Manhasset, N.Y. 854,570, pub. 11-28-67. Cl. 23.
Timberline Equipment Co., Bradley, Ill. 733,376, canc. Cl. 23.
Todd, E. M., Co., The, Richmond, Va. 854,757, pub. 5-28-68. Cl. 46.
Topps Chewing Gum, Inc., Brooklyn, N.Y. 854,766, pub. 5-28-68. Cl. 46.
Topps Chewing Gum, Inc., Brooklyn, N.Y. 854,777, pub. 5-28-68. Cl. 46.
Toronto Star Ltd., Toronto, Ontario, Canada. 733,442, canc. Cl. 38.
Tota-Ton, Inc., Sterling, Colo. 854,537, pub. 5-28-68. Cl. 19.
Tower Packaging Co., Wheeling, Ill. 854,414, pub. 5-28-68. Cl. 2.
Transene Co., Inc., Rowley, Mass. 854,437, pub. 4-16-68. Cl. 6.
Translip Co., The: *See*—
  Muerth, Ruth W.
Trattoria, Inc., New York, N.Y. 854,870, pub. 5-28-68. Cl. 100.
Troy Record Co., The, Troy, N.Y. 854,651, pub. 5-28-68. Cl. 38.
Truesdail Laboratories, Inc., Los Angeles, Calif. 502,752, ren. 8-13-68. Cl. 100.
Truly Nolen, Inc., Miami, Fla. 854,892, pub. 5-28-68. Cl. 103.
Tumble-King International, Inc., from Maclevy Sports Equipment Corp., New York, N.Y. 733,359, canc. Cl. 22.
Turistcheque, Inc., Miami, Fla. 854,885-6, pub. 5-28-68. Cl. 101.
Turkey Peat Co.: *See*—
  Sroda, George.
Union Oil Co. of California: *See*—
  Pure Oil Co., The.
United Gilsonite Laboratories, Scranton, Pa. 854,472, pub. 5-28-68. Cl. 12.
United Silver and Cutlery Co., Los Angeles, Calif. 854,538, pub. 5-28-68. Cl. 21.
U.S. Electronics Corp., Lyndhurst, N.J. 733,384, canc. Cl. 23.
United States Envelope Co., Springfield, Mass., from Homeline Corp., Miami, Fla. 854,402, pub. 4-12-66. Cl. 2.
United States Gasket Co., Camden, N.J., to Garlock Inc., Palmyra, N.Y. 439,630, ren. 8-13-68. Cl. 35.
U.S. Plywood Corp.: *See*—
  U.S. Plywood-Champion Papers Inc.
U.S. Plywood-Champion Papers Inc., from U.S. Plywood Corp., New York, N.Y. 854,912. Cl. 4.
U.S. Rubber Co., New York, N.Y. 733,477, canc. Cl. 42.
United States Shoe Corp., The, Cincinnati, Ohio. 854,680, pub. 5-28-68. Cl. 39.
United States Steel Corp., Pittsburgh, Pa. 854,873, pub. 5-28-68. Cl. 100.
Universal Computer Systems, Inc., New York, N.Y. 854,878, pub. 5-28-68. Cl. 101.
Universal Industries, Inc., Baltimore, Md. 854,467, pub. 5-28-68. Cl. 12.
Universal Oil Products Co., Des Plaines, Ill. 854,435-6, pub. 5-28-68. Cl. 6.
Universal Oil Products Co., Des Plaines, Ill. 854,843, pub. 5-28-68. Cl. 52.
Universal Packaging Corp., from Stone & Forsyth Co., Everett, Mass. 733,210, canc. Cl. 2.
Univis, Inc., Fort Lauderdale, Fla. 854,590, pub. 5-28-68. Cl. 26.
Utah Fruit Products Co., Provo, Utah. 854,737, pub. 5-28-68. Cl. 46.
Utley Porcelains, Ltd., Trenton, N.J. 854,809, pub. 5-28-68. Cl. 50.

U.S. GOVERNMENT PRINTING OFFICE: O—1968

U.S. DEPARTMENT OF COMMERCE
OFFICIAL GAZETTE of the UNITED STATES PATENT OFFICE
August 20, 1968 Volume 853 Number 3

PATENTS

NOTICES

Board of Appeals Decisions Rendered in the Month of June 1968

Examiner affirmed	121
Examiner affirmed in part	14
Examiner reversed	30
Total	165

Official Mailing Address

The official mailing address for all communications sent to the Patent Office remains:

Commissioner of Patents
Washington, D.C. 20231

The physical location of the Office is 2021 Jefferson Davis Highway, Arlington, Va. This address should not be used on mail sent to the Patent Office.

C. A. KALK,
Director of Administration.

June 25, 1968.

United States Adopted Names

LIST NO. 20

March 1, 1968 to June 30, 1968

The following nonproprietary names for the drugs described have been adopted by the USAN Council (the nomenclature committee sponsored by the American Medical Association, the American Pharmaceutical Association, and the United States Pharmacopeial Convention) in cooperation with the interested manufacturers. The designation "United States Adopted Names" (USAN) has been coined to distinguish these formally adopted nonproprietary names from other nonproprietary names. Adoption of such names does not imply endorsement of the products involved by the A.M.A. Council on Drugs, the United States Pharmacopeia, or the National Formulary.

Any comments or suggestions should be addressed to Doctor Joseph B. Jerome, Secretary, United States Adopted Names Council, American Medical Association, 535 N. Dearborn St., Chicago, Ill., 60610.

benzoctamine hydrochloride: psychopharmacologic agent (sedative; muscle relaxant)
betamethasone benzoate: topical anti-inflammatory
boldenone undecylenate: anabolic (long-acting)
carbenicillin potassium sodium: antibiotic
cirolemycin: antineoplastic
clogestone acetate: progestogen
clomegestone acetate: progestogen
clopidol: poultry coccidiostat
crufomate: kills internal and external parasites of livestock
danazol: anterior pituitary suppressant
decoquinate: poultry coccidiostat
dexivacaine: anesthetic
fluprednisolone valerate: anti-inflammatory
furazosin hydrochloride: antihypertensive
guanadrel sulfate: antihypertensive
iodamide: radiopaque medium
lomofungin: antifungal antibiotic
metoserpate hydrochloride: veterinary antianxiety
mianserin hydrochloride: antiserotonin; antihistamine
mitotane: antineoplastic
nivazol: glucocorticoid
ormetein: anti-inflammatory
oxprenolol hydrochloride: coronary dilator
poncuronium bromide: neuro-muscular blocking agent; peripheral muscle relaxant
pyrrolnitrin: antifungal
ranimycin: antibacterial antibiotic
salethamide maleate: analgesic
steffimycin: antibiotic
sulfadoxine: antibacterial sulfonamide

Rejections Not Based on Prior Art

The primary object of the examination of an application is to determine whether or not the claims define a patentable advance over the prior art. This consideration should not be relegated to a secondary position while undue emphasis is given to non-prior art or "technical" rejections. Effort in examining should be concentrated on truly essential matters, minimizing or eliminating effort on matters which may have played a part in the examination process in the past but which are not really critical. Where a major technical rejection is proper (e.g., lack of proper disclosure, undue breadth, utility, etc.) such rejection should be stated with a full development of the reasons rather than by a mere conclusion coupled with some stereotyped expression.

Generally speaking, the inclusion of (1) negative limitations and (2) alternative expressions, provided that the alternatively expressed elements are basically equivalents for the purpose of the invention, are permitted if no uncertainty or ambiguity with respect to the question of scope or breadth of the claim is presented.

The examiner has the responsibility to make sure the wording of the claims is sufficiently definite to *reasonably* determine the scope. It is applicant's responsibility to select proper wording of the claim, except to the extent that the selection of words makes the claims indefinite. Under no circumstances should a claim be rejected merely because the Examiner prefers a different choice of wording.

Rejections not based on prior art are explained in 706.03(a) to 706.03(y). IF THE ITALICIZED LANGUAGE IN THESE SECTIONS IS INCORPORATED IN THE REJECTION, THERE WILL BE LESS CHANCE OF A MISUNDERSTANDING AS TO THE GROUNDS OF REJECTION.

RICHARD A. WAHL,
Assistant Commissioner.

July 23, 1968.

New Applications Received During May 1968

Patents	8117
Designs	453
Plant Patents	11
Reissues	33
Total	8614

Issue—August 20, 1968

Patents	1000	—No. 3,397,406 to No. 3,398,405, incl.
Designs	95	—No. 211,975 to No. 212,069, incl.
Plant Patents	2	—No. 2,828 to No. 2,829, incl.
Total	1097	

Adverse Decisions in Interferences

In the designated interferences involving the indicated claims of the following patents final decisions have been rendered that the respective patentees were not the first inventors with respect to the claims listed.

Patent No. 3,045,993, N. J. Sidaris, DRYER CONTROL SYSTEM, decided Mar. 26, 1968, Interference No. 95,084, claims 1–10.

Patent No. 3,061,182, V. M. Corrado and R. J. Donahue, TAPE PERFORATOR FOR TYPE COMPOSING MACHINES, decided May 24, 1968, Interference No. 95,875, claims 4, 5, 6 and 7.

Patent No. 3,083,246, G. Holzman and A. W. Shaw, POLYMERIZATION OF OLEFINIC HYDROCARBONS, decided Mar. 15, 1968, Interference No. 94,783, claims 1–5, 7, 14, 16 and 17.

Patent No. 3,123,601, P. A. Diassi, ACETAL AND KETAL DERIVATIVES OF 3-(LOWER ALKOXY)-$\Delta^{3,5}$-PREGNADIENE 16α,17α-DIOL-20-ONE, decided May 6, 1968, Interference No. 95,583, claims 1, 2 and 3.

Patent No. 3,125,545, R. Van Cleve and D. H. Mullins, HIGH IMPACT STRENGTH VINYL CHLORIDE RESIN COMPOSITIONS BLENDED WITH ETHYLENE-VINYL ALKANOATE COPOLYMERS, decided July 10, 1968, Interference No. 95,249, claim 5.

Patent No. 3,143,460, D. A. Pearce, METHOD FOR MAKING PESTICIDE COMPOSITION OF A PESTICIDE-RESIN MIXTURE COATED ON GRANULES, decided July 1, 1968, Interference No. 95,283, claims 1, 2, 3, 4 and 8.

Patent No. 3,151,192, W. A. Jacobs and F. H. Collins, METHOD OF EXTRUDING A FOAMED THERMOPLASTIC PRODUCT, decided June 6, 1968, Interference No. 95,298, claim 1.

Patent No. 3,193,978, J. Bader, HEAT SEALING THERMOPLASTIC PACKAGES, decided July 1, 1968, Interference No. 95,756, claim 5.

Patent No. 3,201,434, G. C. Tesoro, DI(BETA ETHYLSULFONYL) SALTS, decided June 3, 1968, Interference No. 95,592, claim 1.

Patent No. 3,206,519, G. G. Eberhardt, PREPARATION OF ALKYL AROMATIC HYDROCARBONS, decided June 19, 1968, Interference No. 95,828, claims 1–4, and 8–12.

Patent No. 3,206,519, G. G. Eberhardt, PREPARATION OF ALKYL AROMATIC HYDROCARBONS, decided June 19, 1968, Interference No. 95,829, claims 20, 22 and 24.

Patent No. 3,257,793, S. L. Abbott, MAKING CORE YARN, decided May 10, 1968, Interference No. 95,953, claims 1, 4, 5, 6, 7 and 8.

Patent No. 3,312,882, L. J. Pollock, TRANSISTOR STRUCTURE, AND METHOD OF MAKING SUITABLE FOR INTEGRATION AND EXHIBITING GOOD POWER HANDLING CAPABILITY AND FREQUENCY RESPONSE, decided June 21, 1968, Interference No. 96,107, claims 1 and 2.

Patents Available for Licensing or Sale

3,096,019. CALCULATING MACHINE KEYBOARD. Advance Glove Manufacturing Co., 901 W. Lafayette Blvd., Detroit, Mich., 48226.

3,114,822. INDUSTRIAL HEAT TREATING APPARATUS. Harry B. Boland, correspondence to: Board of Directors, 908 West Ave., Jenkintown, Pa., 19046.

3,383,806. MOTION CONTROL DEVICE FOR GRINDING TOOL. Eugen Stratemeyer, Bochum, Germany. Correspondence to: Michael S. Striker, 360 Lexington Ave., New York, N.Y., 10017.

3,388,930. COUPLING DEVICE. Charles W. Miller, Box 127, Portage, Ohio, 43451.

3,390,479. CASTING GUN. Ray Hamilton, Washta, Iowa, 51061.

Eastman Kodak Company announces that, in accordance with its policy, nonexclusive licenses upon reasonable terms are available to responsible domestic applicants (under the circumstances prevailing at the time) under the following 7 patents.

Applications for license may be addressed to The Director, Patent, Department, Eastman Kodak Company, 343 State St., Rochester, N.Y., 14650.

3,128,182. SILVER HALIDE SOLVENT CONTAINING DEVELOPERS AND PROCESS.

3,141,771. ALDEHYDE SCAVENGERS FOR PHOTOGRAPHIC SILVER HALIDE DEVELOPERS.

3,201,246. PHOTOGRAPHIC DEVELOPERS CONTAINING CALCIUM PRECIPITATION INHIBITORS.

3,266,895. METHOD FOR PROCESSING MULTILAYER COLOR FILM.

3,294,536. PHOTOGRAPHIC PREHARDENER COMPOSITIONS.

3,300,305. COLOR DEVELOPERS CONTAINING COMPETING DEVELOPING AGENTS.

3,342,596. BENZOTHIAZOLIUM COMPOUNDS FOR CONTROLLING OVERDEVELOPMENT.

The Radio Corporation of America offers to grant non-exclusive licenses on reasonable terms and conditions under patents listed below.

Inquiries respecting licenses under the following 18 patents should be addressed to: Radio Corporation of America, Staff Vice President, Domestic Licensing, 30 Rockefeller Plaza, New York, N.Y., 10020.

3,386,742. MECHANICAL MOVEMENT.

3,387,358. METHOD OF FABRICATING SEMICONDUCTOR DEVICE.

3,387,758. LOW JITTER WEB AND TAPE DRIVE.

3,388,263. AGC FOR BROADBAND PARAMETRIC AMPLIFIER.

3,388,265. COUPLING CIRCUIT.

3,388,285. SIZE STABILIZATION.

3,388,286. VERTICAL DEFLECTION CIRCUIT UTILIZING A SINGLE MULTI-ELECTRODE ELECTRON DISCHARGE DEVICE.

3,388,292. INSULATED GATE FIELD-EFFECT TRANSISTOR MEANS FOR INFORMATION GATING AND DRIVING OF SOLID STATE DISPLAY PANELS.

3,388,309. VOLTAGE REGULATOR INCLUDING ISOLATION BETWEEN INPUT AND OUTPUT.

3,388,338. GAIN CONTROLLED AMPLIFIER USING FIELD EFFECT TYPE TRANSISTOR AS THE ACTIVE ELEMENT THEREOF.

3,388,391. DIGITAL STORAGE AND GENERATION OF VIDEO SIGNALS.

3,388,398. DOPPLER TYPE CORRELATION SYSTEM.

3,390,033. METHOD OF SEPARATING FRIT SEALED PARTS OF AN ELECTRON TUBE.

3,390,314. SEMICONDUCTOR TRANSLATING CIRCUIT.

3,390,333. PARALLEL AMPLIFIERS WITH INPUT AND OUTPUT COUPLING BY MEANS OF CLOSELY-PACKED, ELECTRICALLY SMALL INPUT AND OUTPUT RADIATORS.

3,390,339. PULSE RATE LIMITING CIRCUIT.

3,390,345. TRANSISTOR PROTECTION CIRCUIT.

3,390,346. TRANSISTOR PROTECTION CIRCUIT.

General Electric Company is prepared to grant non-exclusive licenses under the following 47 patents upon reasonable terms to domestic manufacturers.

Applications for license under the following 9 patents may be addressed to: Patent Counsel, Avionic Controls Department, General Electric Company, P.O. Box 5000, Binghamton, N.Y., 13902.

3,235,844. ADAPTIVE SYSTEM.

3,262,277. LOW TEMPERATURE THERMAL REGENERATOR.

3,267,683. REFRIGERATION SYSTEM.

3,273,125. SELF-ADAPTING NEURON.

3,296,825. SOLID STATE ELECTRONIC DEVICE AND METHOD.

3,349,251. LEVEL SENSOR CIRCUIT.

3,355,953. NON-CONSTRAINED PENDULOUS GYROSCOPE FOR INERTIAL CONTROL SYSTEMS.

3,363,187. PULSE CENTER DETECTOR.

2,790,946. AIRCRAFT CONTROL APPARATUS.

Applications for license under the following 13 patents should be addressed to: General Electric Company, Patent Counsel, Housewares Division, 1285 Boston Ave., Bridgeport, Conn.

3,328,820. ILLUMINATED FLOOR POLISHER.

2,788,532. BED COVER.

2,863,035. HEATING AND TEMPERATURE SENSITIVE CONTROL WIRE.

3,014,104. ELECTRICAL CONTACTS.

3,184,564. SHOCK PROOF RELAY.

3,204,066. THERMAL-ELECTRICAL CONTROL DEVICE HAVING THERMALLY EXPANSIVE MATERIAL AS A SWITCH ACTUATOR.

3,213,328. TEMPERATURE SENSOR SYSTEM.

3,213,329. TEMPERATURE SENSOR SYSTEM.

3,222,497. ELECTRICALLY HEATED BEDCOVER.

3,246,086. SWITCH ASSEMBLY AND CIRCUIT FOR ELECTRICALLY HEATED BEDCOVERS.

3,251,973. ELECTRIC BEDCOVER WITH ADJUSTABLE SWITCH.

3,312,802. BIMETAL WITH HEATER MOUNTED THROUGH A CHANNEL FORMED BY ALTERNATELY SPACED PORTIONS SEPARATED BY SLITS.

2,846,560. HEATER WIRE.

Applications for license under the following 23 patents may be addressed to: General Electric Company, Appliance Components Division, 1635B Broadway, Fort Wayne, Ind., 46804. Attn: Patent Operation.

2,975,245. ROCKER-OPERATED SWITCH.

3,096,408. SEQUENCE CONTROLLER MECHANISM.

3,169,174. PUSH-BUTTON SWITCH.

3,188,596. WIRING DEVICE WITH SIMPLIFIED GROUNDING AND MOUNTING MEANS.

3,188,597. TERMINAL DEVICE.

3,206,964. APPARATUS AND METHOD FOR HELICALLY WINDING STRIP MATERIAL.

3,211,846. MULTIPLE PUSHBUTTON SWITCH WITH SELECTIVE LATCHING MECHANISM.

3,222,583. CONTROL SYSTEMS.

3,234,805. SEQUENCE TIMER CONTROLS.

3,278,821. CEMF RESPONSIVE CONTROLLED RECTIFIER SUPPLY FOR MOTORS.

3,286,363. FABRIC DRYER CONTROLS.

3,293,463. LEAD POSITIONER AND ANCHOR FOR DYNAMOELECTRIC MACHINES.

3,301,780. PREPARATION OF COMPACTED BODY OF IMPROVED LUBRICATING AGENTS.

3,318,565. PILOT CONTROLLED VALVE.

3,321,641. SNAP-ACTION TRIGGER CIRCUIT FOR SEMICONDUCTOR SWITCHING DEVICES.

3,324,447. ELECTRICAL CONNECTOR.

3,335,291. ZERO VOLTAGE SWITCHING CIRCUIT USING GATE CONTROLLED CONDUCTING DEVICE.

3,337,837. ELECTRIC CONNECTOR WITH TORSION CONTACTS.

3,348,183. ELECTRICAL COILS AND METHODS FOR PRODUCING SAME.

3,355,310. METHOD OF FORMING LAYERS OF INSULATING MATERIAL IN SLOTS OF MAGNETIC CORES.

3,368,130. ELECTRIC MOTOR WINDING CONTROL AND PROTECTION ARRANGEMENT.

3,368,131. MULTISPEED INDUCTION TYPE ELECTRIC MOTOR SELECTIVELY OPERATIVE WITH AT LEAST TWO PRIMARY MAGNETIC POLES WHICH DIFFER IN NUMBER FOR DIFFERENT RUNNING SPEEDS.

3,373,485. METHOD OF PRODUCING A ROTOR AND SHAFT ASSEMBLY.

PATENT EXAMINING CORPS

R. A. WAHL, Assistant Commissioner

CONDITION OF PATENT APPLICATIONS AS OF JULY 29, 1968

PATENT EXAMINING OPERATIONS AND GROUPS * Denotes date of oldest application for each Operation.	Actual Filing Date of Oldest Case Awaiting Action: New	Amended
CHEMICAL EXAMINING OPERATION		
GENERAL CHEMISTRY AND PETROLEUM CHEMISTRY, GROUP 110—M. STERMAN, Director Inorganic Compounds; Inorganic Compositions; Organo-Metal and Organo-Metalloid Chemistry; Metallurgy; Metal Stock; Electro Chemistry; Batteries; Hydrocarbons; Mineral Oil Technology; Lubricating Compositions; Gaseous Compositions; Fuel and Igniting Devices.	5- 2-66	1-8 -64
GENERAL ORGANIC CHEMISTRY, GROUP 120—I. MARCUS, Director Heterocyclic; Amides; Alkaloids; Azo; Sulfur; Misc. Esters; Carbohydrates; Herbicides; Poisons; Medicines; Cosmetics; Steroids; Oxo and Oxy; Quinones; Acids; Carboxylic Acid Esters; Acid Anhydrides; Acid Halides.	5- 2-66	5-24-63
HIGH POLYMER CHEMISTRY, PLASTICS AND MOLDING; GROUP 140—L. J. BERCOVITZ, Director Synthetic Resins; Rubber; Proteins; Macromolecular Carbohydrates; Mixed Synthetic Resin Compositions; Synthetic Resins With Natural Polymers and Resins; Natural Resins; Reclaiming; Pore-Forming; Compositions (Part) e.g.: Coating; Molding; Ink; Adhesive and Abrading Compositions; Molding, Shaping, and Treating Processes.	5-16-66	1-27-64
COATING AND LAMINATING, BLEACHING, DYEING AND PHOTOGRAPHY, GROUP 160—J. R. LIBERMAN, Director Coating; Processes and Misc. Products; Laminating Methods and Apparatus; Stock Materials; Adhesive Bonding; Special Chemical Manufactures; Special Utility Compositions; Bleaching; Dyeing and Photography.	*10-12-65	5-27-63
SPECIALIZED CHEMICAL INDUSTRIES AND CHEMICAL ENGINEERING, GROUP 170—W. B. KNIGHT, Director Fertilizers; Foods; Fermentation; Analytical Chemistry; Reactors; Sugar and Starch; Paper Making; Glass Manufacture; Gas; Heating and Illuminating; Cleaning Processes; Liquid Purification; Distillation; Preserving; Liquid and Solid Separation; Gas and Liquid Contact Apparatus; Refrigeration; Concentrative Evaporators; Mineral Oils Apparatus; Misc. Physical Processes.	3-17-66	2-21-64
ELECTRICAL EXAMINING OPERATION		
INDUSTRIAL ELECTRONICS AND RELATED ELEMENTS, GROUP 210—W. S COLE, Director Generation and Utilization; General Applications; Conversion and Distribution; Heating and Related Art Conductors; Switches; Miscellaneous.	3- 9-66	3- 4-64
SECURITY, GROUP 220—S. BOYD, Director Ordnance, Firearms and Ammunition; Radar, Underwater Signalling, Directional Radio, Torpedoes, Seismic Exploring, Radio-Active Batteries; Nuclear Reactors, Powder Metallurgy, Rocket Fuels; Radio-Active Material.	4- 4-67	2- 5-65
INFORMATION TRANSMISSION, STORAGE AND RETRIEVAL, GROUP 230—M. L. LEVY, Director Communications; Multiplexing Techniques; Facsimile; Data Processing, Computation and Conversion; Storage Devices and Related Arts.	*8- 9-65	*10-10-62
ELECTRONIC COMPONENT SYSTEMS AND DEVICES, GROUP 250—W. L. CARLSON, Director Semi-Conductor and Space Discharge Systems and Devices; Electronic Component Circuits; Wave Transmission Lines and Networks; Optics; Radiant Energy; Measuring.	9-10-65	*10-10-62
PHYSICS, GROUP 280—R. L. EVANS, Director Photography; Sound and Lighting; Indicators and Optics; Measuring and Testing; Geometrical Instruments.	6- 6-66	4- 1-65
DESIGNS, GROUP 290—S. BOYD, Director Industrial Arts; Household, Personal and Fine Arts.	10-30-67	10-21-66
MECHANICAL EXAMINING OPERATION		
HANDLING AND TRANSPORTING MEDIA, GROUP 310—A. BERLIN, Director Conveyors; Hoists; Elevators; Article Handling Implements; Store Service; Sheet and Web Feeding; Dispensing; Fluid Sprinkling; Fire Extinguishers; Coin Handling; Check Controlled Apparatus; Classifying and Assorting Solids; Boats; Ships; Aeronautics; Motor and Land Vehicles and Appurtenances; Railways and Railway Equipment; Brakes; Rigid Flexible and Special Receptacles and Packages.	3- 2-67	8-13-65
MATERIAL SHAPING, ARTICLE MANUFACTURING, TOOLS, GROUP 320—N. BERGER, Director Manufacturing Processes, Assembling, Combined Machines, Special Article Making; Metal Deforming; Sheet Metal and Wire Working; Metal Fusion—Bonding, Metal Founding; Metallurgical Apparatus; Plastics Working Apparatus; Plastic Block and Earthenware Apparatus; Machine Tools for Shaping or Dividing; Work and Tool Holders Woodworking; Tools; Cutlery; Jacks.	10- 3-66	1- 4-65
AMUSEMENT, HUSBANDRY, PERSONAL TREATMENT, INFORMATION, GROUP 330—A. RUEGG, Director Amusement and Exercising Devices; Projectors; Animal and Plant Husbandry; Butchering; Earth Working and Excavating; Fishing, etc.; Tobacco; Artificial Body Members; Dentistry; Jewelry; Surgery; Toiletry; Printing; Typewriters; Stationery; Information Dissemination.	8-16-66	5-25-64
HEAT AND POWER ENGINEERING, GROUP 340—C. F. GAREAU, Director Power Plants; Combustion Engines; Fluid Motors; Pumps; Turbines; Heat Generation and Exchange; Refrigeration; Ventilation; Drying; Vaporizing; Temperature and Humidity Regulation; Machine Elements; Power Transmission.	6-14-67	6-17-66
FIXED CONSTRUCTIONS, SUPPORTS, AND HARDWARE, GROUP 350—T. J. HICKEY, Director Joints; Fasteners; Rod, Pipe and Electrical Connectors; Miscellaneous Hardware; Locks; Building Structures; Closure Operators; Bridges; Closures; Earth Engineering; Drilling; Mining; Furniture; Receptacles; Supports; Cabinet Structures.	2- 9-67	12- 8-64
TEXTILES, CLEANING AND FLUID HANDLING, GROUP 360—F. H. BRONAUGH, Director Fluid Handling, including Valves; Conduits; Filling Receptacles; Lubrication; Joint Packing; Bathroom Fixtures; Centrifugal Separators; Cleaning; Coating; Pressing; Agitating; Foods; Textiles; Apparel and Shoes and their Manufacture; Sewing Machines; Winding and Reeling.	*5-31-66	*5-29-63

Total number of pending applications (excluding Designs) 189,821
Total number of Design applications pending 3,192

Expiration of patents: The patents within the range of numbers indicated below expire during August 1968, except those which may have expired earlier due to shortened terms under the provisions of Public Law 690, 79th Congress, approved August 8, 1946 (60 Stat. 940) and Public Law 619, 83rd Congress, approved August 23, 1954 (68 Stat. 764), or which may have had their term curtailed by disclaimer under the provisions of 35 U.S.C. 253.

Patents .... Numbers 2,562,875 to 2,566,294, inclusive
Plant Patents .... Numbers 1,024 to 1,034, inclusive

DECISIONS IN PATENT AND TRADEMARK CASES

U.S. Court of Customs and Patent Appeals

IN RE DAVID G. BRAITHWAITE

No. 7800. Decided June 15, 1967

[54 CCPA—; 379 F.2d 594; 154 USPQ 29]

1. APPLICATION—DISCLOSURE—REFERENCE TO CO-PENDING APPLICATION.

"With respect to a matter of practice, we fail to note any reference in the patent to the instant application though it was filed many months before the patent issued. Though Patent Office Rule 79 is somewhat discouraging with respect to such a notice, it is at least permissive and it would seem the better part of wisdom, to say the least, and very helpful to attorneys, if it were to be indicated that subject matter disclosed is being claimed in another application, suitably identified."

2. PATENTABILITY—DOUBLE PATENTING—OBVIOUSNESS TYPE.

"The rejection is on the ground of 'double patenting,' the Braithwaite patent is not prior art and Calingaert is. We regard this as an obviousness-type double patenting situation, that is, the rejection is on the ground that the difference between what is claimed here and what is claimed in the patent to Braithwaite is only such a difference or modification as would be obvious to those of ordinary skill in the art in view of the prior art."

3. SAME—SAME—SAME.

"While analogous to the non-obviousness requirement of 35 U.S.C. 103, that section is not itself involved in double patenting rejections [of the obviousness type] because the patent principally underlying the rejection is not prior art."

4. SAME—SAME—TERMINAL DISCLAIMER—OVERLAPPING CLAIMS.

"We dealt thoughtfully with this situation in *Robeson* and *Kaye*, supra. The Examiner and the Board refused to apply those cases on the ground it would amount to an 'extension' of their holdings due to factual differences. The Examiner felt the claims here differ only 'colorably' from the patent claims, with which we disagree; and the Board relied on the fact that here the patent claims are 'generic' and 'embrace' what is here claimed, whereas in *Robeson* and *Kaye* the claims were mutually exclusive. We do not see what difference this makes. It is said by the Solicitor that due to this generic aspect the claims of the patent and the application 'overlap.' We do not see what difference that makes either. When a terminal disclaimer causes two patents to expire together a situation is created which is tantamount for all practical purposes to having all the claims in one patent. It is common for a single patent to contain overlapping—i.e. generic and specific—claims. We have previously indicated that generic and specific claims, though by definition they 'overlap,' may be considered as 'distinct' in the double patenting context. *In re Sarett*, 51 CCPA 1180, 327 F.2d 1005, 140 USPQ 474."

5. SAME—SAME—SAME—SAME.

"Double patenting is a basis of rejection grounded in public policy and primarily intended to prevent prolongation of monopoly. The present case is an example. With the aid of a sketchy forecast in the patent specification of things to come, Braithwaite was able to obtain claims which cover what he is now claiming in this application. Assuming validity of the broad patent claims, he has been enjoying patent protection which would be continued beyond the expiration of his patent, by allowance of the appealed claims, on subject matter which does not differ from the subject matter of that patent in an unobvious, that is to say 'patentable' way. But by his terminal disclaimer he has foreclosed the possibility of such an extension of protection."

6. SAME—SAME—SAME—SAME.

"Looking at the other side of the picture, it appears to us to have been to the advantage of the public—rather than to himself—that Braithwaite has followed the course above described. By taking out his patent and filing continuation-in-part applications (there is another in Appeal No. 7801 decided concurrently), he accelerated the disclosure contained in his patent and hastened the date of expiration of his protection as therein afforded. By his terminal disclaimer he has hastened as well termination of protection from any

claims he may get as a result of this appeal. Furthermore, he has added considerable disclosure of technology, over what is in his patent, by the additional matter contained in the continuation-in-part applications and supporting the claims presented therein. Assuming dominating claims in his patent, all he is getting from this application—and for only the remainder of the same term—are additional, more specific claims which would serve as a second line of defense if the dominating claims should prove to be vulnerable. To affirm in this case would principally serve to deprive the public of the knowledge contained in the added disclosures. We can perceive no sound reason for deciding this obviousness-type double patenting case differently from *Robeson* or *Kaye*."

REVERSED.

Marzall, Johnston, Cook & Root, Richard L. Johnston, Herbert B. Keil for appellant.

Joseph Schimmel (*Joseph F. Nakamura*, of counsel) for the Commissioner of Patents.

Before WORLEY, *Chief Judge*, RICH, SMITH, and ALMOND, *Associate Judges*, and Judge WILLIAM H. KIRKPATRICK [1]

RICH, *J.*, delivered the opinion of the court.

This appeal is from the decision of the Patent Office Board of Appeals, adhered to on rehearing, affirming the rejection of claims 1–17 of application Serial No. 93,361, filed March 6, 1961, for "Manufacture of Organic Lead Compounds." No claim is allowed.

The sole ground of rejection is "double patenting" in view of the claims of appellant's Patent No. 3,007,858 [2] issued November 7, 1961, on application Serial No. 811,262 of which the application on appeal is a continuation-in-part. In further support of the rejection the following prior art reference is relied on:

Calingaert et al., 2,535,193, Dec. 26, 1950.

Following appeal to the Board and the filing of the Examiner's answer, Nalco Chemical Company, assignee of the application at bar, filed a terminal disclaimer under 35 U.S.C. 253, disclaiming the terminal part of the term of any patent granted on the application which would extend beyond November 7, 1978, the expiration date of Braithwaite Patent 3,007,858. Thereafter the Examiner filed a supplemental answer stating that he had considered our decisions in *In re Robeson*, 51 CCPA 1271, 331 F.2d 610, 141 USPQ 485, and *In re Kaye*, 51 CCPA 1465, 332 F.2d 816, 141 USPQ 829, both of which were decided after the date of the Examiner's original answer,[3] and holding the terminal disclaimer ineffective to avoid the double patenting rejection. He said the claims here on appeal were not of the type involved in *Robeson* and *Kaye* but were mere "colorable variations" of the patent claims and cited in support of his rejection *In re Siu*, 42 CCPA 864, 222 F.2d 267, 105 USPQ 428. The Board sustained the Examiner's position. We reverse.

The inventions of the patent and the application relate to the manufacture of organic lead compounds. Braithwaite's Patent 3,007,858 relates primarily to the manufacture of tetraethyl lead, the familiar "Ethyl" antiknock compound used in motor fuels, by a new electrolytic process. Neither the disclosure nor claims of the patent, however, are

[1] Senior District Judge, Eastern District of Pennsylvania, sitting by designation.

[2] This patent issued to Nalco Chemical Company, Chicago, Illinois. Appellant, David G. Braithwaite, assignor, is president of that company and has also assigned the application on appeal to Nalco.

[3] Apparently the sequence of events was something like this: The Examiner filed his answer April 8, 1964, our *Robeson* and *Kaye* opinions were published May 25 and June 22, appellant filed a supplemental response (not of record) October 9 probably calling attention to these decisions, executed the terminal disclaimer December 29 and filed it January 4, 1965, the Examiner filing his supplemental answer February 5. The Board decided the case April 28, 1965.

limited to making tetraethyl lead. The disclosure is that the invention is a process for making "organo metallic compounds." The disclosure of the "organo" portion or radical (R in the formula, infra) includes "methyl, ethyl, propyl, isopropyl, butyl and higher homologues, phenyl, benzyl, and the like." The disclosure of the metallic component (M in the formula), while primarily lead, is broadened by the statement that "the metal M in Equation C can be another metal which is capable of being electrolyzed in a Grignard reagent. Examples of such other metals are calcium, zinc, cadmium, manganese, mercury, lanthanum, thallium, arsenic, bismuth, tellurium and selenium." Equation "C" is the basic reaction formula for the electrolytic process of the invention and is:

$$\text{C.}\quad 4RMgX + M^{++++} \rightleftarrows M(R)_4 + 2MgX_2 + Mg$$

$$\text{D.}\quad RX + Mg \longrightarrow RMgX$$

Formula "D" is a simultaneous reaction, the combining of the free magnesium produced with added organic halide as hereinafter explained. A Grignard reagent, as is well known, has the basic formula RMgX, the first item in the above Equation "C" and the last item in "D," wherein R is an organic radical, Mg is the metal magnesium, and X a halogen, such as chlorine, bromine, or iodine. It will be observed that if M is lead and X is chlorine, then the first-named product $M(R)_4$ is tetraethyl lead, which is produced along with magnesium chloride MgX_2 and some metallic magnesium.

Some further background of the patented process is relevant to the legal problem under discussion. Prior to Braithwaite's patented invention it appears that tetraethyl and related lead compounds, which enjoy a market of some $270,000,000 or more a year, were made by purely chemical processes. The differentiating characteristic of Braithwaite's process is that it is an electrolytic process, having certain advantages we need not discuss. The gist of it is that a Grignard reagent is placed in solution in an organic solvent containing a pair of electrodes to which current is applied. At least the anode, in the case of making organo lead compounds, is made of lead and lead or a variety of other conductors can be used for the cathode. The lead anode is referred to as a "sacrificial anode" as it is consumed, the metal combining with organic radicals from the Grignard reagent upon electrolysis. The Mg radicals which are simultaneously freed from said reagent would normally cause problems by depositing on the cathode or bridging the electrodes and, to eliminate these problems, one aspect of the invention is to add to the solution another organic halide, referred to by Braithwaite as "extraneous" halide to distinguish it from the organic halide needed to form Grignard reagent. This added organic halide combines with the free magnesium and reconverts it to a Grignard reagent as shown in Formula "D," avoiding magnesium deposit on the cathode and possible bridging of the electrodes. Example: ethyl magnesium chloride, which is a Grignard reagent, is dissolved in dibutyl ether of diethylene glycol. Ethyl chloride is added to the solution and current is passed between a steel cathode and a lead anode therein. Tetraethyl lead forms in the solution from the combining of the ethyl radicals from the Grignard reagent with the lead anode. Removal of the product from the solution is by conventional techniques forming no part of the invention.

Note that in the above example *both* the Grignard reagent and the extraneous organic halide are *ethyl* compounds. This exemplifies the

principal difference between what is said to be the invention of the patent and the invention of the appealed application. In the patent it is stated that the invention utilizes an extraneous organic halide "the organic radical of which *corresponds* to the organic radical of the Grignard reagent being used." [Emphasis ours.] For example, the organic radical in each is ethyl. All of the examples of the patent disclose the same pair of ethyl compounds. In the application, as hereinafter explained, the organic radicals *differ*.

The difficulties of this case would appear to arise from two facts: not all of the patent claims are limited to using Grignard reagent and extraneous organic compound with *corresponding* organic radicals and the specification contains certain broadening statements. To illustrate the first fact: Claims 3, 4, 5, and 6 of the patent specify a process for making tetra*ethyl* lead utilizing *ethyl* magnesium chloride and extraneous *ethyl* chloride. However, claims 1, 2, 7, and 8, all the remaining claims, are more generic with respect to the organic radical, using the term "alkyl" (which describes ethyl broadly) or referring to the Grignard reagent broadly without specifying what the R of RMgX is. Patent claim 1 is typical of these broader claims:

1. A process for preparing *alkyl* lead compounds which comprises electrolyzing, using a lead anode, a substantially anhydrous solution of *a Grignard reagent* in a substantially inert organic solvent for said Grignard reagent employing an electrolyzing current effective to cause said lead anode to dissolve in said solution of said Grignard reagent in said organic solvent, adding an excess of an *alkyl* halide over that required for the formation of the Grignard reagent, and recovering from the resultant product an *alkyl* lead compound consisting of *alkyl* radicals linked directly to metallic lead. [Emphasis added.]

From reading that claim it will be evident that both the Grignard reagent and the added alkyl halide could contain different, rather than corresponding, alkyl radicals, ethyl and methyl for example. Therefore, the claims so worded would be infringed by and so would cover a process, or dominate a patent on a process, using such a pair of *differing* "alkyl" compounds.

The second significant fact creating difficulties in this case is that such a claim construction would find support in certain broadening statements in the patent specification. We have already quoted above the statement about how the "organo" portion of the organo metallic compound (Grignard reagent) may be one of several kinds. Another significant statement is this: "The halogen portion of the added organic halide does not have to be the same as the halogen portion of the Grignard reagent." This follows the statement that "In accordance with the invention" the organic radicals do correspond. The passage principally relied on by the Patent Office follows a description of several different Grignard reagents which may be used, in which the organic radicals are ethyl, isopropyl, butyl, amyl, and phenyl, and states that mixtures of them may be used "to produce other organic lead compounds * * * containing the phenyl radical or both the phenyl and ethyl radicals or both phenyl and other alkyl radicals * * *." This is about all the patent contains with respect to forming lead compounds having different organic radicals attached to the lead atoms. In other words, it briefly indicates the possibility.[4] There is no

[1] [4] With respect to a matter of practice, we fail to note any reference in the patent to the instant application though it was filed many months before the patent issued. Though Patent Office Rule 79 is somewhat discouraging with respect to such a notice, it is at least permissive and it would seem the better part of wisdom, to say the least, and very helpful to attorneys, if it were to be indicated that subject matter disclosed is being claimed in another application, suitably identified.

specific disclosure of how to make such compounds. Four of the eight claims are of such scope as to cover the process of making them, broadly.

The application on appeal is a continuation-in-part and adds a great amount of detail with respect to the making of lead compounds in which different organic radicals are attached to the lead. We shall now describe briefly the nature of this disclosure. Basically the same electrolytic process for making "organic lead" compounds is described, the metal in this case being specified to be lead in the specification and in all claims. The invention is stated to be particularly for "the manufacture of organic lead compounds containing two different hydrocarbon radicals linked directly to metallic lead." The object of the invention is stated to be "a new and improved process for preparing compounds in which different organic radicals are linked to metallic lead." The opening paragraph of the description reads:

In accordance with the present invention a substantially anhydrous solution of a Grignard reagent in an organic solvent for the Grignard reagent is electrolyzed, using a lead anode, and adding extraneous organic halide to the electrolyte, *subject to the condition that the electrolyzing action is carried out in the presence of at least two different organic radicals which react with the lead.* [Emphasis ours.]

There follows extensive, detailed description and sixteen specific examples of the making of such compounds which are not to be found in the patent disclosure and which, if a patent is granted, surely would contribute considerable knowledge to the art not to be gleaned from the patent.

The appealed claims fall into two groups. Claims 1–10 are directed to process and claims 11–17 to an electrolyte. Claims 1 and 11 exemplify them (emphasis ours):

1. A process for preparing organic lead compounds containing *different* organic radicals linked to the same metallic lead atom which comprises electrolyzing, using a lead anode, a substantially anhydrous solution of at least one Grignard reagent in a substantially inert solvent for said Grignard reagent, and adding at least one extraneous organic halide to said solution, the organic radical of at least one said organic halide being *different* from the organic radical of at least one said Grignard reagent.

11. An electrolyte for making organic lead compounds comprising a substantially anhydrous solution of at least one Grignard reagent in a substantially inert solvent for said Grignard reagent and at least one extraneous organic halide, and the organic radical of at least one said Grignard reagent being *different* from the organic radical of at least one said organic halide, the total concentration of extraneous organic halides being within the range of 0.1 to 1.1 moles per mole of total Grignard reagent.

All of the claims either specify different organic radicals or different alkyl radicals, or name specifically organic radicals which are different.

It may, therefore, be accurately stated that the appealed claims are to processes of a specific nature not *specifically* claimed in the patent, albeit some of the claims therein may be sufficiently broad in scope to provide patent coverage for what is here claimed, assuming the validity of such broad claims. Naturally, the appealed claims, in general being narrower than such broad claims in the patent, are less vulnerable to attacks on their validity than the broad patent claims.

The claims to electrolyte compositions are, of course, to subject matter not claimed in the patent at all, though putting the electrolytes to use would result in processes which would be covered. They are nevertheless claims of quite different commercial significance to a possible vendor of electrolyte solutions.

The question before us, then, is whether, by taking out the patent, Braithwaite has estopped himself from obtaining these added and narrower claims to specific aspects of his electrolytic process for making organic lead compounds and electrolytes used therein, on the basis of a greatly amplified disclosure of something merely foreshadowed by general observations in his patent disclosure.

The question has been narrowed by the filing of the terminal disclaimer to inquiry into whether he can have these claims in a patent which would expire at the same time as his already issued patent.

The above-described situation can be summarized as follows. In the application which eventuated in his patent, Braithwaite described his basic process for making tetraethyl lead by an electrolytic process, characterizing his process more broadly, however, by reference to "organo metallic" compounds, "organic halides" added to the bath, and by suggesting certain instances in which the organic radicals attached to lead might be different. In each of his five patent examples his Grignard reagent and his extraneous organic halide are both ethyl compounds and the product is tetraethyl lead. He says at least twice that according to his invention the organic radicals of the two bath ingredients "correspond." In four of his eight claims they do correspond and are, specifically, both ethyl. In the other four claims broader language is used in that the term "alkyl" replaces "ethyl," whereby the claims become broad enough to read on a process in which the organic radicals do not correspond, though no claim says they do not or that they differ. While the parent application was still pending and eight months before the patent issued, the application at bar was filed containing a full and detailed description of processes not described in the original application, not having as their objects the production of tetraethyl lead but of different lead compounds wherein, instead of four ethyl or other *like* organic radicals attached to lead, *unlike* or *different* organic radicals are attached to the lead atoms, giving products such as those described as resulting from the new specific examples. In Example I, a methyl Grignard reagent is used with extraneous tertiary butyl chloride and it is stated that "The lead product containing both methyl and tertiary butyl radicals linked directly to metallic lead is recovered by removal of the solvent." In Example IX is the statement, "The product is a mixture of organic lead compounds, including tetraethyl lead, tetramethyl lead, triethylmethyl lead, diethyldimethyl lead and trimethylethyl lead." Example XII says "The product is a mixture of organic lead compounds containing methyl, ethyl and tertiary butyl radicals linked to metallic lead." At the conclusion of the examples is a summary of the various ways of carrying out this invention "either by employing two or more organic halides with a single Grignard reagent or by employing two or more organic halides with a mixed Grignard reagent or by employing a single organic halide with a mixed Grignard reagent." It concludes, "In any case, products are obtained containing at least two different organic radicals linked to metallic lead." This invention, whether claimed as process or as electrolyte, is not described in the original application with the fullness contemplated by 35 U.S.C. 112. It is only hinted at in the broadening statements above referred to which would seem to have had the disclosure of the present application in mind as a future possibility.

The rejection before us was thus stated by the Examiner in his original answer, to which he adhered and with which the Board agreed:

> It is the Examiner's contention that the present claims do not define a separate and independent invention over the claims of the patent to Braithwaite. Claim 1 of the patent calls for electrolyzing an electrolyte comprising a Grignard reagent and an alkyl halide. As evident from the last paragraph of col. 4 et seq. (Rule 75(d)) the "Grignard reagent" and "alkyl halide" of the patented claims may be mixed to produce a mixed organic lead compound. The mixed Grignard reagent and the corresponding organic halides would provide at least one different organic radical in the electrolyte.
>
> The Examiner further contends that it would be within the skill of the art to apply the teaching of Calingaert et al. to an electrolytic process as apparent from the patented claims. * * *
>
> * * * * * * *
>
> Claims 11–18 [17] embrace the electrolytes that may be used in the process. While the argument above is directed to such claims, it is considered that the proportions of components or reactants claimed are not critical but merely preferred amounts. In any event it is within the skill of the art to determine optimum or operable proportions.

Calingaert et al. disclose purely chemical (non-electrolytic) processes for making alkyl lead compounds including such as tetraethyl lead wherein all alkyl radicals attached to the lead are the same and compounds in which they are different. Little more need be said about it considering the use made of this reference by the Patent Office and the view we take of the case.

[2] The rejection is on the ground of "double patenting," the Braithwaite patent is not prior art and Calingaert is. We regard this as an obviousness-type[5] double patenting situation, that is, the rejection is on the ground that the difference between what is claimed here and what is claimed in the patent to Braithwaite is only such a difference or modification as would be obvious to those of ordinary skill in the art in view of the prior art. Appellant contests the Patent Office position on obviousness on the ground that electrolytic process behavior cannot be predicated on the basis of purely chemical reactions, citing *Ex parte Wilson*, 71 USPQ 276 (1946) in which the Board said, with respect to a process for electroplating copper,

> It is not determinable before hand in these electrolytic processes what may result from combining different reagents or active materials. The action may be regarded as more obscure than simple or pure chemical reactions, due to the presence of electrolytic effect.

While this may be so, the starting point here is Braithwaite's patented process for making tetraethyl lead in which there are two "alkyl" radical sources in his electrolytic bath, the Grignard and the extraneous reagents. Knowing that when they are both ethyl compounds they produce tetraethyl lead, we do not think we have sufficient factual basis for holding there was error in the Examiner's view that Calingaert et al. would make it obvious that use as one of the alkyl compounds of a methyl compound, for example, would reasonably be expected to produce mixed organic radicals attached to the lead. We therefore proceed on the basis that the appealed claims are to processes and electrolytes not differing from what is claimed in the patent in an unobvious manner. In the absence of a terminal disclaimer, this would lead to an affirmance. *In re Simmons*, 50 CCPA 990, 312 F.2d

[3] [5] While analogous to the non-obviousness requirement of 35 U.S.C. 103, that section is not itself involved in double patenting rejections because the patent principally underlying the rejection is not prior art.

821, 136 USPQ 450. But, unlike *Simmons*, a terminal disclaimer was filed in this case, which brings us to a consideration of its effect.

[4] We dealt thoughtfully with this situation in *Robeson* and *Kaye*, supra. The Examiner and the Board refused to apply those cases on the ground it would amount to an "extension" of their holdings due to factual differences. The Examiner felt the claims here differ only "colorably" from the patent claims, with which we disagree; and the Board relied on the fact that here the patent claims are "generic" and "embrace" what is here claimed, whereas in *Robeson* and *Kaye* the claims were mutually exclusive. We do not see what difference this makes. It is said by the Solicitor that due to this generic aspect the claims of the patent and the application "overlap." We do not see what difference that makes either.[6] When a terminal disclaimer causes two patents to expire together a situation is created which is tantamount for all practical purposes to having all the claims in one patent. It is common for a single patent to contain overlapping—i.e. generic and specific—claims. We have previously indicated that generic and specific claims, though by definition they "overlap," may be considered as "distinct" in the double patenting context. *In re Sarett*, 51 CCPA 1180, 327 F.2d 1005, 140 USPQ 474.

[5] Double patenting is a basis of rejection grounded in public policy and primarily intended to prevent prolongation of monopoly. The present case is an example. With the aid of a sketchy forecast in the patent specification of things to come, Braithwaite was able to obtain claims which cover what he is now claiming in this application. Assuming validity of the broad patent claims, he has been enjoying patent protection which would be continued beyond the expiration of his patent, by allowance of the appealed claims, on subject matter which does not differ from the subject matter of that patent in an unobvious, that is to say "patentable" way. But by his terminal disclaimer he has foreclosed the possibility of such an extension of protection.

[6] Looking at the other side of the picture, it appears to us to have been to the advantage of the public—rather than to himself—that Braithwaite has followed the course above described. By taking out his patent and filing continuation-in-part applications (there is another in Appeal No. 7801 decided concurrently), he accelerated the disclosure contained in his patent and hastened the date of expiration of his protection as therein afforded. By his terminal disclaimer he has hastened as well termination of protection from any claims he may get as a result of this appeal. Furthermore, he has added considerable disclosure of technology, over what is in his patent, by the additional matter contained in the continuation-in-part applications and supporting the claims presented therein. Assuming dominating claims in his patent, all he is getting from this application—and for only the remainder of the same term—are additional, more specific claims which would serve as a second line of defense if the dominating claims should prove to be vulnerable. To affirm in this case would principally serve to deprive the public of the knowledge contained in the added disclosures. We can perceive no sound reason for deciding this obviousness-type double patenting case differently from *Robeson* or *Kaye*.

---

[6] We are not unaware of the January 9, 1967, Commssioner's notice, 834 OG 1615, entitled "Double Patenting," but it has not been relied on in this case. We are aware that it is inconsistent with this opinon with respect to overlapping claims of a single inventive entity.

The Patent Office has relied on *In re Siu*, supra. We have reexamined it and consider it distinguishable for reasons explained in *Robeson*. There is more than one invention involved here. The single mechanical fiber-producing process involved in *Siu* did not become a different process by merely naming the specific material, glass, operated on. Chemical processes involving different reagents and producing different products are different processes constituting *different* inventions even if they are not patentably distinct.

The decision of the Board is reversed.

REVERSED.

WORLEY, *Chief Judge*, and KIRKPATRICK, *J.*, did not participate.

SMITH, *J.*, concurring.

The record shows that the Board of Appeals here consisted of an examiner-in-chief and two acting examiners-in-chief. Appellants do not challenge the legality of that board. For the reasons expressed in my dissenting opinion in *In re Wiechert*, 54 CCPAA 957, 370 F.2d 927, 152 USPQ 247, it is my view that the decision of such a board is a legal nullity. However, I accept here the majority's view on this issue in the *Wiechert* case, that is, the legality of the board is not an issue here. I therefore participate in the merits of this appeal and in so doing, agree with the conclusion of the majority.

Turning to the merits of this appeal, a few additional observations further support the conclusion reached by the majority.

The "law" of "double patenting" is indeed confusing.[7] One factor frequently overlooked, present in *all* "double patenting" cases involving the *same* inventor, is that as between the subject matter in the claims sought to be patented and those teachings which are "prior art" under the 1952 Patent Act, the subject matter is useful, novel and *unobvious* in view of that "prior art." In other words, the inventor has made a "patentable invention" under the conditions specified in sections 102 and 103.

The term "double patenting" is not mentioned in the 1952 Patent Act.[8] It is a judicially created doctrine which acts to deny applicants patents. Its very existence would appear to be contrary to statements in previous opinions of this court, as stated in *In re Murray*, 46 CCPA 905, 268 F.2d 226, 122 USPQ 364, 367, for

> * * * an applicant is entitled to a patent unless one of the prohibitory provisions of the statutes, now the Patent Act of 1952, Title 35 U.S.C. applies.

See also *In re Ratti*, 46 CCPA 976, 270 F.2d 810, 123 USPQ 349; *In re Cavallito*, 48 CCPA 720, 282 F.2d 363, 127 USPQ 206; and *In re Gustafson*, 51 CCPA 1358, 331 F.2d 905, 141 USPQ 585.

To date this court has not discarded "double patenting" as a ground of rejection (as we did "aggregation" in *In re Gustafson*, supra). Instead, our efforts have attempted to harmonize the various "principles" of the "law" of "double patenting" with the mandatory provision of the Patent Act that "A person *shall* be entitled to a patent unless" a stated ground of rejection applies. Thus we have held that section 101 contains the prohibition that an applicant is only entitled to "*a* patent" for *an* invention. Here I refer to the "same invention" type of "double patenting": See *In re Robeson*, 51 CCPA 1271, 331 F.2d 610, 141

---

[7] See Rich, The Proposed Patent Legislation: Some Comments, 35 Geo. Wash. L. Rev. 641, 646–47 (1967); Bullinger, "Double Patenting" and the 1952 Patent Act, 10 IDEA 389 (1966).

[8] It is well known, however, that sections 121 and 253 were intended, in part, as *remedial* provisions applicable in certain "double patenting" situations.

USPQ 485. By so proceeding we have endeavored to accommodate the various "types" of "double patenting" *situations* that have appeared before us *and* give effect to the provisions of the Patent Act. See *In re Bowers*, 53 CCPA 1590, 359 F.2d 886, 149 USPQ 570; *In re Robeson*, supra.

While we have been able to identify the "same invention" type "double patenting" with a statutory provision, such is not the case with "obviousness" type "double patenting." It stands as a judicially created doctrine and certainly not bottomed on section 103. See *In re Zickendraht*, 50 CCPA 1529, 319 F.2d 225, 229, 138 USPQ 22, 25, concurring opinion, Rich, *J*. The patent is simply not "prior art" under the terms of section 103. *If* section 103 were applicable then obviously there would be no need for this type of "double patenting."

It seems to me that "obviousness" type "double patenting" rests upon a judicially recognized policy that an inventor may not claim subject matter that is obvious from that previously claimed *because* of the possibility of an "extension of the monopoly" (patent protection) concerning the previously claimed subject matter.[9] Under section 154, the inventor is entitled only to exclude others from making, using, or selling the invention throughout the United States for the term of seventeen years.

Recognizing that the doctrine of "double patenting" is judicially created and, further, that objections based on "double patenting" may be "unavoidable," *In re Robeson*, supra, it seems to me that the "obviousness" type should be applied to the ends of preventing any "extension of monopoly" *and* doing justice to applicants. The substantive principles of sections 101 and 154, of course, may not be compromised. The remedial provisions of sections 121 and 253, however, do not represent a compromise. Thus whether "obviousness" type "double patenting" does in fact exist becomes nothing more than a needless mental exercise in cases where, as here, there can be no "extension of monopoly" because of the remedial provisions of the Patent Act.

Accordingly, our present view is that a terminal disclaimer will not overcome a rejection based on the objection that the applicant seeks to claim the "same invention"—here meaning same subject matter—and it will overcome a rejection based on the objection that the applicant seeks to claim a "different invention"—here meaning "different subject matter"—which is "obvious" in view of the earlier claimed subject matter either considered *alone* or in *combination* with "prior art." [10]

It may indeed be confusing to some to learn that a terminal disclaimer removes any objection to the "obviousness" of the invention in "double patenting" situations but will not remove an objection to "obviousness" under section 103. Cf. *Hays* v. *Brenner*, 357 F.2d 287, 148 USPQ 365 (D.C. Cir. 1966). Commissioner Brenner has stated, in an address delivered to the Patent Professional Staff of the Patent Office on March 30, 1966 (825 O.G. 825):

> • • • if the Examiner is satisfied that the claimed invention is clearly obvious in view of the teachings of the prior art, to a person having ordinary skill in the pertinent art, then a patent should not be granted even if affidavits, terminal disclaimers, and the like are presented by the applicant, *since such papers can-*

[9] I am not concerned with the title or theory of this policy, e.g., estoppel, dedication, etc. Nor do I here refer to unobvious subject matter which, if patented, patent protection would "overlap" the protection for previously claimed subject matter. This has never been contrary to patent law.

[10] There is no place in Patent Law for the use of the term "invention" as a requisite of patentability. Older cases to that effect should be ignored. *Graham* v. *John Deere Co.*, 383 U.S. 1, 148 USPQ 459 (1966); *In re Walles*, 54 CCPA 710, 366 F.2d 786, 151 USPQ 185. The Commissioner's comments as to affidavits, infra in text, are contrary to *Graham* as *all* the relevant *facts* must be considered, pro and con, not just one side.

> ***not change what is obvious so it may become unobvious and therefore a patentable invention.*** [Emphasis added.] 825, O.G. at 827.

Referring only to the Commissioner's comments as to terminal disclaimers, a case of "obviousness" type "double patenting" *is based on teachings which cannot be considered under section 103*. See *In re Bowers*, 149 USPQ at 575, fn. 7. That which is "obvious" in a "double patenting" sense may *not* be obvious under the terms of section 103 simple because *less* information is available under section 103 when the patent is *not* a proper reference and may not be considered.[11]

The plain fact here is that the patent relied on for the rejection is *not* "prior art" under the Patent Act and resort to section 103 is prohibited under the present view of the law.[12] Thus the claimed invention is *not obvious* in view of the "prior art," section 103. It seems to me that to refuse to give effect to a terminal disclaimer to overcome a "double patenting" rejection based on "obviousness" is *contrary* to the 1952 Patent Act. Congress has provided for terminal disclaimers and we must act accordingly.

In the present case the Patent Office argues that the "double patenting" situation before us involves "overlapping" claims and the terminal disclaimer fails to "overcome the double patenting rejection." I fail to see, and the Patent Office has not explained, how this alleged fact somehow operates to prevent the consequences inuring from the filing of a terminal disclaimer, section 253. Clearly the terminal disclaimer eliminates the basis for the objection, i.e., "extension of monopoly." As appellant here claims different subject matter than is claimed in his prior patent there can be no objection based on section 101. *In re Walles*, supra. Because of the terminal disclaimer, there can be no "extension of monopoly." [13]

The Patent Office has failed to state a single reason why the terminal disclaimer is ineffective other than that the claims "overlap." While *In re Siu*, 42 CCPA 864, 222 F.2d 267, 105 USPQ 428, is relied on by the Patent Office as authority for this position, I find nothing in that decision *or* opinion which is contrary to the result reached here. Moreover *Siu* is not a viable precedent in the "law" of "double patenting" as in my view the subject matter relied on in the Ladisch patent was "prior art" under sections 102(e), 103, and 120. A review of the record in that case shows that there were *different inventors* (Ladisch and Siu) and *no common assignee* (the U.S. Government had a royalty free license in both cases) when Siu's application was rejected by the Examiner.[14] The Examiner made no "double patenting" rejection. Instead, he relied on Siu's admission that he *derived* the process from Ladisch and *subsequently* applied it to molten glass. In the Examiner's

[11] Under section 103, the patent may not be considered but in "double patenting" situations, the *claims* may be considered in view of the "prior art." Conversely, the inquiry permitted under "double patenting" is *narrower* as compared to the inquiry permitted under section 103 when the patent *is* a proper reference. *In re Bowers*, 149 USPQ at 575, fn. 7. It seems to me that the statutes are mandatory and must be applied, and there should be no resort to "double patenting" when the patent is a proper reference. See *In re Ornitz*, 54 CCPA —, — F.2d —, 153 USPQ 453.

[12] I refer here of course to the same inventorship. Where the inventorship is different, the Patent Office should proceed under sections 102(e) and 103. *In re Ornitz*, 54 CCPA —, — F.2d —, 153 USPQ 453. See *In re Land*, 54 CCPA 806, 368 F.2d 866, 151 USPQ 621, 634 at fn. 12. Moreover, where these latter section are *applicable*, a terminal disclaimer cannot overcome a rejection *based on those sections*. A terminal disclaimer overcomes only certain objections based on *"double patenting."*

[13] No "abuse" of the terminal disclaimer has been suggested. See *In re Robeson*, supra. See also supra fn. 1, "Evils of Double Patenting," 10 IDEA at 397 (1966).

[14] Certain agreements were entered into by Ladisch and Siu with Texicion Corp. after an appeal had been taken, Ladisch executed an "Assignment" and Siu executed an "Agreement." See *Ex parte Hein*, 114 USPQ 175 (Bd. App. 1955).

view, Ladisch's teachings were "prior art" as to Siu.[15] See *In re Lo Presti*, 52 CCPA 755, 333 F.2d 932, 142 USPQ 176. The first reference to "double patenting" by the Patent Office was in the Board's opinion. The opinion of this court expressly points out "the Ladisch patent, which issued on an earlier filed application [sic], may be *properly cited as a reference*[16] against appellant's instant application," 42 CCPA at 868, 105 USPQ at 405. [Emphasis added.] In short, I do not believe either that a "double patenting" rejection was made or could have been made in *Siu* (no common assignee); or that this court there affirmed a "double patenting" rejection.

The problem in *Siu* appears to stem from appellant's reliance on a terminal disclaimer. Appellant argued before the Office that the following "novel issue" should be decided, *after* the Board appeared to reject the claims on the basis of "double patenting":[17]

> * * * whether a patent [Ladisch] under *common ownership*,[18] which was *copending* with a pending application filed for a different species [glass] in the name of a *different member* [Siu] of the same research team [Ladisch & Siu] and containing claims overlapping with the patent [dominated by, within the scope of the patent claims], can be *removed as a reference* against the pending application *by means of a timely disclaimer* in the pending application, under the last provision of section 253 of the Patent Act of 1952, of that terminal portion of the term of the patent to be granted on the still pending application which would extend beyond the expiration date of the patent already granted; i.e., where the grant of patent on the application for the second species would NOT *extend the monopoly* conferred on the common owner by the generic claims of the patent already issued * * *. [Emphasis added.]

Before this court Siu argued there was no "double patenting" rejection. Apparently he also wonder whether the recently enacted provision as to terminal disclaimer could be used to *remove prior art subject matter* thus circumventing sections 102(e), 103 and 120. With this background information, the statement that Ladisch was *properly cited as a reference*, *In re Lo Presti*, in the opinion in *Siu* takes on its true importance. What was said in *Bowers*, supra, that a terminal disclaimer cannot remove subject matter in the prior art, was decided some 11 years earlier in *Siu*. Furthermore, the Examiner correctly applied section 102(e) in *not* relying on Ladisch's description of Siu's invention. See *In re Land*, supra. Remarks in the *Siu* opinion as to the effect of a terminal disclaimer should be considered in relation to the only issue properly before the court, arising under sections 102(e), 103, and 120. Any statements in *Siu* relating to "double patenting" and terminal disclaimers inconsistent with *Kaye* and *Robeson* have long been overruled.

The issue presented by Siu, quoted supra, and his arguments were recently presented in *In re Fong*, PA 7786, decided concurrently herewith. The problems faced by common assignees arising from the fact

[15] Ladisch and Siu were co-workers. According to the record in *Siu* both inventors originally considered that they were *joint* inventors of the whole subject matter. Subsequently they were advised by patent attorneys that they were not joint inventors and that the subject matter was divisible. Separate individual applications were then filed, each of which identified and described the other's invention and presented claims only to their respective contributions. See *In re Land*, supra fn. 3.

[16] Sections 102(e), 103 and 120. The order of the respective applications is as follows:

1. 4–26–49, No. 89,776 (L & S jointly)
2. 8–15–49, No. 110,371 (L)
3. 8–15–49, No. 110,372 (L)
4. 8–16–49, No. 110,663 (S) ("Parent")
5. 10–19–49, No. 122.343 (L)
6. 8–21 50. No. 180,686 (S) (CIP of 4, application on appeal)
7. 10–23–50, No. 191,672 (L) (CIP) of 1, 2, 3, and 5, Ladisch patent).

See discussion supra fn. 6, and accompanying text.

[17] See infra fn. 12. The apparent confusion of the Board probably stems from its erroneous impression that the Examiner rejected Siu's *claims* over the subject matter *claimed* in Ladisch. See *In re Ornitz*, supra, especially appellant's arguments therein. Compare the arguments of appellants in *Hays* with those made in *Siu*.

[18] Apparently Siu was willing to assume, for purposes of argument, that the royalty-free license in the government was tantamount to "common ownership."

that groups rather than individuals often make inventions are for Congress. See *In re Fong*.

I therefore would reverse the decision of the Patent Office for the reason that its rejection is not based on a statutory ground of rejection *and* its action is contrary to section 253. See *In re Robeson*, 51 CCPA at 1274, 1276, 141 USPQ at 488, 489, fns. 4 and 10. Manifestly, when section 101 and 103 are satisfied, a judicially created doctrine should not be permitted to operate to negate the remedial provisions of section 253.[19]

[19] It seems to me that the Examiner, when he believes that an "obviousness" type situation is present, should inform the applicant that the claims will not be allowed in the absence of a terminal disclaimer because to do so would result in an extension of patent protection contrary to section 154.

U.S. Court of Customs and Patent Appeals

RICHARD J. CLAUSS AND HENRY BROWN

v.

DONALD GARDNER FOULKE, OTTO KARDOS AND HERMAN KORETZKY

No. 7683. Decided June 22, 1967

[54 CCPA —; 379 F.2d 586; 154 USPQ 85]

1. APPEAL TO U.S. COURT OF CUSTOMS AND PATENT APPEALS—MATTER BEFORE COURT—INTERFERENCE—WINNING PARTY NEED NOT CROSS APPEAL ON ISSUES DECIDED ADVERSELY BY BOARD.

"As the winning party below, Foulke is not required to cross appeal with respect to issues raised by them before the Board and decided adversely to them. See *Klemperer* v. *Price*, 47 CCPA 729, 271 F.2d 743, 123 USPQ 539."

2. INTERFERENCE—REDUCTION TO PRACTICE—ACTUAL.

"We must agree with Foulke that Clauss has not proved by a preponderance of the evidence that he or Brown knew, at a time prior to Foulke's filing date, whether an amount of di-adduct sufficient to satisfy the requirement of the count was employed by Tomaszewski in her plating experiments. * * *. Whether Tomaszewski's experiments did or did not come within the numerical limitation of the count, such fact was admittedly not known until 1964, the time of Stolten's analysis [subsequent to Foulke's filing date]. We think it is well settled that the patent law does not recognize reduction to practice *nunc pro tunc*. See *Heard* v. *Burton*, 51 CCPA 1502, 333 F.2d 239, 142 USPQ 97; compare *Gianladis* v. *Kass*, 51 CCPA 753, 324 F.2d 322, 139 USPQ 300 at footnote 7."

3. SAME—SAME—SAME.

"* * * the proof of effectiveness of the combination of SAS and di-ethylene oxide adduct of 2-butyne-1, 4-diol alone as a nickel brightener must be found deficient [as an actual reduction to practice] in view of the fact the evidence introduced shows it to have been used only in admixture with substantial quantities of other materials, both known and unknown."

4. SAME—SAME—SAME.

Held, on the issue of actual reduction to practice, "We do not think the use of SAS and quantities of Exhibit 1 in plating baths containing other commercial nickel brightener materials necessarily establishes that the di-adduct-SAS combination itself produced a bright nickel."

AFFIRMED.

Harness, Dickey & Pierce, *Neal A. Waldrop* (*Sidney Wallenstein*, and *Albert C. Martin*, of counsel) for appellants.

Pennie, Edmonds, Morton, Taylor and *Adams* (*James W. Laist*, *Robert J. Kadel*, *Carl G. Scutter*, *Charles N. Shane, Jr.*, of counsel) for appellees.

Before WORLEY, *Chief Judge*, RICH, SMITH, and ALMOND, *Associate Judges*, and WILLIAM H. KIRKPATRICK[1]

WORLEY, *Chief Judge*, delivered the opinion of the court.

[1] Senior District Judge, Eastern District of Pennsylvania, sitting by designation.

Clauss and Brown [2] appeal from the decision of the Board of Patent Interferences awarding priority of invention to the senior party, Foulke, Kardos and Koretzky,[3] of a process for producing bright nickel deposits from an electroplating bath, as reflected in the only count:

1. The process for producing bright nickel deposits which comprises electrodepositing nickel from an aqueous solution of at least one nickel salt characterized in that there is dissolved in the nickel plating bath at least about 1 millimole per liter of a compound of the formula

$$\mathrm{R_1{-}O{-}CH_2{-}C{\equiv}C{-}CH_2{-}O{-}R_2}$$

wherein R_1 is a radical selected from the group consisting of

$$-\mathrm{H},\ -\mathrm{CH_2{-}\overset{\overset{\displaystyle OH}{|}}{C}H{-}CH_2Cl},\ -\mathrm{C_2H_4OH}\ \text{and}\ -\mathrm{CH_2{-}\overset{\overset{\displaystyle CH_3}{|}}{C}HOH}$$

and R_2 is a radical selected from the group consisting of

$$-\mathrm{CH_2{-}\overset{\overset{\displaystyle OH}{|}}{C}H{-}CH_2Cl},\ -\mathrm{C_2H_4OH}\ \text{and}\ -\mathrm{CH_2{-}\overset{\overset{\displaystyle CH_3}{|}}{C}HOH}$$

and sodium allyl sulfonate in an amount of at least about 0.3 gram/liter.

The novelty in the electrodeposition process resides in the use of a combination of "at least about 0.3 gram/liter" of sodium allyl sulfonate (SAS) and "at least about 1 millimole per liter" of a particular derivative of 2-butyne-1,4-diol [4] as a brightening agent whereby a bright nickel deposit is produced, in contrast to the dull or matte surface appearance resulting from electrodeposition of nickel in the absence of a brightening agent.

Foulke took no testimony and is accordingly restricted to his filing date for conception and constructive reduction to practice. The principal issue before us is whether Clauss has proved by a preponderance of the evidence that he reduced the invention to practice by actually carrying out the process of the count prior to Foulke's filing date. Subsidiary questions related to that issue are whether the evidence establishes (1) that Clauss used, and knew he used, a butynediol-ethylene oxide adduct in the quantity required by the count as the active material to produce bright nickel, and (2) that the results of certain laboratory tests carried out on behalf of Clauss were satisfactory. The Board found the testimony, documentary evidence, and physical exhibits introduced by Clauss, relating to activity occurring in 1955 and 1957, to be insufficient to prove actual reduction at those times, principally because it regarded the test results of Clauss to be unsatisfactory.

It appears from the record that Dr. Brown, director of research at Udylite Corp. and coinventor with Clauss, had for some time been interested in the use of unsaturated compounds as brightening agents for nickel plating and, in 1955, had tested 2-butyne-1,4-diol for that purpose. On June 21, 1955, he wrote Dr. Duggins of the Commercial

[2] Clauss and Brown (hereinafter Clauss) are involved on their application Serial No. 16,176, filed March 21, 1960.

[3] Foulke, Kardos and Koretzky (hereafter Foulke) are involved on their application Serial No. 750,258, filed July 22, 1958.

[4] 2-butyne-1,4-diol ($\mathrm{HOCH_2{-}C{\equiv}C{-}CH_2OH}$) itself is an acknowledged nickel brightening agent in the prior art. The particular derivatives of 2-butyne-1,4-diol called for by the count which will be of interest here are its mono- and di-ethylene oxide adducts, $\mathrm{HOCH_2{-}C{\equiv}C{-}CH_2OC_2H_4OH}$ and $\mathrm{HOC_2H_4OCH_2{-}C{\equiv}C{-}CH_2OC_2H_4OH}$, respectively. One millimole of the mono- and di-adducts is equivalent to 130 and 174 milligrams, respectively.

Development Department of General Aniline and Film Corp. (GAF), stating in part (Exhibit 25):

* * * * * * *

The 2-butyne-1,4-diol looks very good for us, but we would prefer it with 1 mole of ethylene oxide added to it, as we need the oxide group. Could you do this for us on a 1 lb. sample? We would gladly pay the costs as we believe that this would be just exactly what we need. i.e.

$$\begin{array}{l}\mathrm{C{-}CH_2OC_2H_4OH}\\ \ \,|||\\ \mathrm{C{-}CH_2OH}\end{array}\quad \text{or mixed with}\quad \begin{array}{l}\mathrm{C{-}CH_2OC_2H_4OH}\\ \ \,|||\\ \mathrm{C{-}CH_2OC_2H_4OH}\end{array}$$

* * * * * * *

Shortly thereafter, in apparent response, Duggins sent Brown a sample of material in a bottle labelled simply

1,4 Butynediol+Ethylene Oxide
Mole Ratio 1.79:1
High Pressure Run No. 314D

That bottle, still containing a portion of dark brown liquid, is in evidence as Clauss Exhibit 1.

Lillie Tomaszewski, holder of a Master of Science degree in chemistry, testified that Clauss gave her the bottle identified as Exhibit 1 on July 1, 1955, and also gave her an outline to follow in employing the contents of the bottle in nickel plating baths in conjunction with various other brighteners, including sodium allyl sulfonate (SAS [5]). Her testimony is conceded to establish that from July 1–8, 1955 and again in August 1957 she plated a number of polished steel test strips in various nickel plating baths to which varying amounts of SAS and material from Exhibit 1 were added. The procedures she utilized and the results that were obtained were recorded in a laboratory notebook, pages of which are in evidence as Exhibits 47–52 and 54–57. Some thirteen individual tests of Tomaszewski, denoted by the parties in their briefs as panels 2, 3, 6, 7, 9, 10, 19, 21, 23, 27 and 28 produced in July 1955, and panels 60 and 62 produced in August 1957, are relied on by Clauss for reduction to practice. Five test panels produced on August 2, 1957, two of which are panels 60 and 62, are in evidence as Exhibits 58–62.

Clauss testified that he inspected the panels produced by Tomaszewski in July 1955 and wrote Brown a report, dated July 8, 1955, and titled "Use of Ethylene Oxide Ether of 1,4 Butyne-Diol in Nickel Electroplating Solutions," which reads in part:

A sample of the ethylene oxide ether of 1,4 butyne-diol was received from General Aniline and Film Corp. on June 28, 1955 and tested on that day. This sample (Run No. 314D) had a molar ratio of 1.79:1.

This material has been found to be effective in watts nickel plating solutions when used with No. 3 or No. 4 ["No. 4" is Udylite's designation of SAS] or various combinations of those brighteners.

When so used, it is possible to obtain fully bright ductile deposits with good leveling. The concentration of the ethylene oxide ether of the butyne-diol may vary from .1 to .30 g/l.

* * * * * * *

The original report is in evidence as Exhibit 30; Clauss' handwritten and typed copies of that report are in evidence as Exhibits 65 and 66; and Tomaszewski's carbon copy is in evidence as Exhibit 53. Clauss stated that his report to Brown was in part based on tests he himself had carried out with the material in Exhibit 1. Those tests are not part of the present record.

[5] The parties agree that Tomaszewski employed the amount of SAS required by the count in all experiments on which Clauss relies for actual reduction to practice.

Brown testified that he also examined the panels made by Tomaszewski. He wrote a letter (Exhibit 27) to Duggins on July 1, 1955, reporting to him that the 1.79/1 mole ratio in Exhibit 1 "does not quite give the right results" and that the "1:1 ratio may work." He wrote Duggins again (Exhibit 28) on July 5, 1955, stating that the material of Exhibit 1

> * * * is closer to our possible commercial use than we first thought, because there is apparently an impurity in the dark brown product causing some trouble. On purification of the material we are obtaining better results.
>
> The 1 mole ethylene oxide addition to the 1 mole of 2-butyne-1,4-diol may definitely be the commercial answer for us, and we are looking forward to this sample. * * * [6]

The "purification" to which Brown refers evidently was the treatment by Tomaszewski of a portion of the material in Exhibit 1 with activated carbon black. The remains of that carbon-treated material is in evidence as Exhibit 18. While the record shows that GAF later sent to Brown samples containing the reaction product of 1 mole of ethylene oxide and 1 mole 2-butyne-1,4-diol, no experimental results from the use of that material were submitted in evidence.

A short history of how the contents of Exhibit 1 came to be produced and analyzed is also pertinent to the issues involved in this appeal. It appears from the record that a Dr. Brusie, group leader of GAF's high pressure laboratory and a person knowledgable in reactions of acetylene compounds, received a request for preparation of "bis-β-hydroxyethylether of 1,4-butynediol

$$(HOCH_2CH_2OCH_2C{\equiv}C{-}CH_2OCH_2CH_2OH)."$$

The request was made by Duggins in October 1954 at the behest of another party who believed the compound would yield "a valuable polyester resin." Subsequently, in January 1955, Brusie and his coworkers carried out a high pressure reaction, Run No. 314D, between 2-butyne-1,4-diol and ethylene oxide in the presence of sodium hydroxide as a catalyst in response to that request. Brusie testified that, to his knowledge, it was the first time a reaction between those compounds had been attempted and he didn't know what product or products he would get when the reaction was carried out. He also testified that he did not have the material resulting from the reaction analyzed to determine what products were produced. Several bottles of the crude reaction product were sent to the Commercial Development Department of GAF. A portion of that crude reaction product ultimately became the material sent by Duggins to Brown in June 1955, Exhibit 1 herein.

When Brown received Exhibit 1, both he and Clauss proceeded with subsequent experimentation in nickel plating on the assumption that Exhibit 1 contained 100% "active material," i.e. "the ethylene oxide adduct of butynediol." The amounts of adduct from Exhibit 1 which Tomaszewski reported in her notebooks that she used in her 1955 and 1957 laboratory experiments, and the amounts of "ethylene oxide ether of the butyne-diol" which Clauss states in Exhibits 30, 53, 65 and 66 were used, all appear to be predicated on that assumption. Indeed, Brown testified that the exemplary amounts recited as useful in their 1960 patent application in the present interference were also premised on that assumption. The record shows that Brown,

[6] Contrary to the position of the Board, Duggins did corroborate receiving each of those letters written by Brown, viz, Exhibits 25, 27 and 28, in his testimony with respect to Exhibit 7.

Clauss or Tomaszewski did not attempt analysis of Exhibit 1 to determine what products, or how much of each, were present, at least in 1955–1957.[7]

Later events proved the assumption of Clauss and Brown as to how much ethylene oxide adduct of butynediol was present in Exhibit 1 to be in fact erroneous. In 1964, over two years *after* the interference was declared, the contents of Exhibit 1 *were* subjected to qualitative and quantitative analysis by Dr. Stolten, head of the analytical department of GAF's central research laboratory. Stolten compared the infra-red (IR) spectrum and vapor-phase chromatograph of the contents of Exhibit 1 with a "reference" spectrum and chromatograph of a sample of commercial "bis-hydroxy-ethyl ether butynediol" produced by GAF in 1962. He found the IR spectrum of Exhibit 1 to be "consistent with the structure of bis-hydroxy-ethyl ether butynediol." He "definitely" found no evidence of any monoethoxylated butynediol in the IR spectrum of either the commercial material or Exhibit 1, stating that if the unsymmetrical mono-adduct were there it would "absorb quite intensely between 4 and 5 microns." On the basis of the gas chromatograph analysis, Stolten calculated the amount of di-adduct present to be $54\pm5\%$. To account for the remaining 46%, he testified that he also found amounts of unreacted butynediol, ethylene glycol, diethylene glycol, triethylene glycol and unknown material in the sample taken from Exhibit 1. One month later, Dr. Stolten testified to performing additional investigation with the sample from Exhibit 1, and concluded, as a result of certain assumptions, that $14\pm5\%$ of the sample might be the mono-adduct. At that time he also analyzed the carbon-treated material of Exhibit 18, and found it to contain $55\pm5\%$ di-adduct and $18\pm5\%$ mono-adduct. He stated that he could have isolated the material he was assuming to be mono-adduct in order to definitely determine its structure, but "I have not been asked to do this."

In its decision, the Board stated that "we do not find it necessary to consider either the evidence [of Clauss] or the arguments [of Foulke] relative" to whether Clauss or Brown knew at the time the nickel plating tests were made in 1955 and 1957 what specific active materials, or how much of them, were in the composition of Exhibit 1, reasoning:

> * * * The record before us establishes that one of the joint inventors, Henry Brown, requested of General Aniline and Film Corporation through its agent, William Duggins, to be supplied with ethoxylated butynediol, the 1 and 2 mole adducts thereof. Duggins testified that he supplied Brown with such a sample as was requested * * *. Duggins further identified the bottle labelled "1,4 Butynediol & Ethylene Oxide Mole Ratio 1.79:1 High Pressure Run No. 314D" (Exhibit 1) as a sample of ethoxylated butynediol[8] produced by General Aniline and Film Corporation * * *. In view of the foregoing we do not feel that it should be necessary for the party Clauss et al. to establish the identity of the adduct received from the General Aniline and Film Corporation. Even though the sample of the adduct was not specifically labelled as such or represented a product produced commercially, it nonetheless was shipped in the course of business by a reputable manufacturer to fill a specific request, and there seems to be little likelihood that the bottle sent (Exhibit 1) did not contain what the manufacturer believed to be the substance requested and so indicated on the

[7] Brown and Tomaszewski each testified to the effect that they depended upon an examination of the test panels to tell them whether they had placed too much, or too little, brightener material from Exhibit 1 in the plating bath. If too much brightener were in the bath, "skipping" (failure of nickel to deposit at all in low current density areas) would occur, and the bath concentration would be diluted accordingly. According to Brown, there would be an "upper limit," or "optimum amount" or range at which addition of further brightener did not improve brightness but did induce "skipping."

[8] Duggins also testified that the expression "ethoxylated butynediol" is a generic term "for any reaction product which you might get by reacting * * * ethylene oxide with 2-butyne-1,4-diol."

> label of the bottle; that is the addition product of 1.79 moles of ethylene oxide and one mole of 2-butyne-1,4-diol. In an analogous situation the Court of Customs and Patent Appeals held that the analysis or testing of a material obtained from an independent manufacturer may not be necessary and may be presumed to be what it is purported to be; *Young et al.* v. *Bullitt*, 43 CCPA 932, 233 F.2d 347, * * * 110 USPQ 55. Furthermore the fact that the label of the sample bottle is not specific with respect to a reaction product or an adduct is not seen to be material in that the testimony of Duggins is deemed to be sufficient to establish that the marking of the label signifies the ethylene oxide, butynediol adduct. As in the *Young et al.* v. *Bullitt* case, supra, the presumption that the sample of the adduct is in fact the ethylene oxide, butynediol reaction product of the count has not been rebutted by any evidence in conflict therewith. * * *
>
> * * * * * * *
>
> The fact that the inventors had knowledge of the contents of the bottle identified as Exhibit 1 is further corroborated by Tomaszewski who testified that she received a copy of the report of her work sent to Brown by Clauss. The report (Exhibit 30) was identified by her, and her copy was also introduced into evidence as Exhibit 53. The report refers to Run No. 314D having a molar ratio of 1.79:1 and indicates it to be the ethylene oxide ether of 1,4-butynediol.

The Board further held that the term "about" in the count expression "at least about 1 millimole per liter of a compound" of the depicted formula appearing in the count "must be construed broadly," since the Foulke and Clauss applications contemplate the use of 0.1 to 250 and 0.29 to 1.44 millimoles per liter, respectively.[9] The Board thus found that at least some of the tests performed by Tomaszewski used the amount of adduct required by the count.

However, the Board stated:

> Notwithstanding the fact that Tomaszewski did carry out plating procedures under the direction of Clauss which meet the limitations of the count in interference, it is our opinion that Clauss et al. have not established by a preponderance of the evidence a successful reduction to practice. After review of the record we do not feel that it adequately establishes that the inventors were able to obtain consistent or reproducible results in the tests conducted in their behalf. * * *

It found that many of the test panels produced by Tomaszewski, although described by her in her notebook as evincing a bright nickel deposit, were also subject to such defects as "skipping" (areas no plating), "edge hardness" and "brittleness," as shown by the written comments of Tomaszewki in her laboratory notebook. That appraisal, together with the failure of Clauss to file a patent application shortly after the 1955 or 1957 tests, indicated to the Board "that the inventors were not entirely satisfied with the results of the tests," and priority was awarded to Foulke.

Under the view we take of this case, it is unnecessary to consider whether, as Clauss contends, the Board erred in holding that Tomaszewski's 1955 and 1957 test results were not consistent or reproducible; or whether it overlooked the fact that bright nickel was produced in every test where SAS and the material in Exhibits 1 and 18 were employed; or whether it "magnified" the factors of edge hardness, brittleness and skipping "out of all sense of reality," in direct conflict with testimony said to show the immateriality of those factors for many plating uses. Rather, we shall consider other matters to which our attention has been directed by the briefs—matters relating in general to the *identity* and *quantity* of active material in Exhibits 1 and 18 which Tomaszewski employed in her 1955 and 1957 experiments.

[9] Actually, the Foulke application discloses the use, "in general," of 0.1 to 250 millimoles/liter of the *"reaction product"* of an "alkynol" and "epoxide," an expression far broader in scope than the specific ethylene oxide mono- or di-adduct of 2-butyne-1,4-diol individually mentioned in the count. With respect to the latter compound, Foulke discloses the use of 0.4 gram/liter (or about 2.3 millimoles/liter), and original claim 10 calls for the use of "from about 1 to about 100 millimoles per liter" of the ethylene oxide di-adduct of the count.

While Clauss does disclose the use of 0.29 to 1.44 millimole/liter of the di-adduct of the count, he actually employed approximately half that quantity in his experimental work, as ~~will appear~~ hereinafter.

Before discussing those aspects of the case, we shall dispose of a preliminary argument advanced by Clauss. He urges that the Board erred in disregarding the *mono-adduct* content he alleges is present in Exhibits 1 and 18 and considering only the *di-adduct* content in determining whether "at least about 1 millimole per liter" of a compound designated by the count was employed by Tomaszewski. It is his position that the "common sense of the situation" dictates that the two components allegedly present in those exhibits—both mono-adduct and di-adduct—be added together if necessary to meet the quantity requirement recited in the count.

We do not agree with Clauss. In our view, Clauss has not established by a preponderance of the evidence that the mono-ethylene oxide-adduct of butynediol *is actually present* in either Exhibit 1 or Exhibit 18. It will be recalled that Stolten initially testified that *no* mono-adduct was present in Exhibit 1, based on the fact he found no absorption in the IR spectrum for that unsymmetrical compound. Only later did he testify, somewhat equivocally we think, that there appeared to be 14–18% of mono-adduct in those Exhibits. No explanation in the record reconciles the conflict between his later testimony and his earlier, more definite statements, predicated on the lack of absorption in the 4–5 micron range of the IR spectrum, that there is no mono-adduct in Exhibit 1 or 18.

Nor do we think that the Board erred in failing to consider any mono-adduct that might be present in those exhibits in ascertaining whether "at least about 1 millimole per liter of *a* compound" of the designated formula in the count was employed by Tomaszewski. The language of the count clearly calls for the use of *a* compound in the nickel plating process, it does not recite the use of *at least one* compound, or the use of *mixtures* of compounds. Nor does it permit addition of amounts of two or more compounds to obtain the required amount. The construction of the count language urged by Clauss is in derogation of what we understand has been the uniform practice in the Patent Office for many years in the interpretation of similar claim language.[10] We see no valid reason to depart from that practice here. Consequently, we shall be concerned in further discussion only with the di-adduct material in Exhibits 1 and 18.

Foulke does not controvert the fact that Tomaszewski, under Clauss' direction, used the contents of Exhibit 1 in her plating experiments appearing in the record, nor does he controvert that Exhibit 1 does contain 54±5% of the di-adduct material, as determined by Stolten's 1964 analysis. Rather, Foulke contends[11] that Clauss or Brown *could not* have known *how much* di-adduct was being employed in the plating experiments carried out in 1955 and 1957 or even whether the di-adduct in combination with SAS was the agent responsible for production of bright nickel, inasmuch as Clauss, Brown and Tomaszewski all testified they had not analyzed the contents of Ex-

[10] See, for example, 28 JPOS 852 (1946); 37 JPOS 164 (1955). That Clauss was aware of appropriate claim language to achieve the purpose he seeks here is evident from original claim 10 of his applicaton whch recites the use in nickel plating of "at least one unsaturated compound represented" by a formula correspondng to that of the count. Clauss did not move to amend the language of the count defining the issue.

[1] [11] As the winning party below, Foulke is not required to cross appeal with respect to issues raised by them before the board and decided adversely to them. See *Klemperer* v. *Price*, 47 CCPA 729, 271 F.2d 743, 123 USPQ 539.

hibit 1 or 18 and GAF, the supplier, did not itself know or represent to Clauss how much di-adduct, or any other product, was in Exhibit 1.

The Board stated that it did not find it necessary to consider the evidence or arguments relating to that issue. The reasons it gives for that conclusion do not go to the crux of the issue posed by Foulke, for even were Clauss justified in assuming that di-adduct material was in Exhibits 1 and 18, a question we need not here decide, the question remains whether Clauss knew *how much* active material was in those exhibits, and what that bright nickel-producing active material was, at any time prior to Foulke's filing date.

[2] We must agree with Foulke that Clauss has not proved by a preponderance of the evidence that he or Brown knew, at a time prior to Foulke's filing date, whether an amount of di-adduct sufficient to satisfy the requirement of the count was employed by Tomaszewski in her plating experiments. True it is that, based on their assumption that Exhibits 1 and 18 contained 100% active material, they might also have assumed they were using di-adduct in amounts greater than 1 millimole/liter. But an assumption is all that was, and an erroneous one at that, as Stolten's 1964 analyses bear out. The fact that the estimated amounts of di-adduct stated in their 1960 application to be useful—.05 to .25 gram/liter, or .28 to 1.44 millimole/liter—admittedly turned out to be nearly twice the actual amounts [12] of di-adduct used by them is rather stark evidence that neither Clauss nor Brown knew prior to Foulke's filing date how much di-adduct was employed in Tomaszewski's tests. Whether Tomaszewski's experiments did or did not come within the numerical limitation of the count, such fact was admittedly not known until 1964, the time of Stolten's analysis. We think it is well settled that the patent law does not recognize reduction to practice *nunc pro tunc*. See *Heard* v. *Burton*, 51 CCPA 1502, 333 F.2d 239, 142 USPQ 97; compare *Gianladis* v. *Kass*, 51 CCPA 753, 324 F.2d 322, 139 USPQ 300 at footnote 7.

We think Clauss' proofs must fail for yet another reason. Whatever initial presumption there might have been that the material of Exhibit 1 was in fact 100% of a product recited in the count has been amply rebutted by Stolten's 1964 analyses to the effect that Exhibits 1 and 18 contain many other known (including a small amount of 2-butyne-1,4-diol, itself a prior art brightener) and *unknown* materials, any one or combination of which, it would seem, could itself have been at least partially, if not totally, responsible for production of bright nickel. In *Vandenberg* v. *Reynolds*, 46 CCPA 938, 268 F.2d 744, 122 USPQ 381, the count in issue related to polymerization of chemical compounds in the presence of a specific catalyst, termed PCH. The appellants used as a catalyst a reaction product which contained some of the catalyst required by the count, as well as other materials which might have acted as catalysts. We quoted from the Board's opinion:

> No competent evidence by Vandenberg has been adduced to satisfactorily establish that the particular hydroperoxide, the inventive feature of the count, was the polymerization catalyst, bearing in mind that it was the entire liquid reaction mass which was used as the catalyst, and that four hydroperoxides of phenyl cyclohexane are theoretically possible. No evidence whatsoever has been introduced to demonstrate that other than the catalyst liquid reaction mass as a whole promoted the superior results stated to have been obtained by PCH.

[12] Clauss does not seriously contend here that the experiments carried out on his behalf employed quantities of Exhibit 1 or 18 greater than 0.25 gram/liter, an amount corresponding to 0.78–0.79 millimole of di-adduct per liter based on Stolten's analysis that those exhibits contain 54 and 55% di-adduct, respectively. Whether Tomaszewski employed even that much material from those exhibits is the subject of much debate in the briefs. It is a point unnecessary to dwell on at length here.

The court concluded:

> We entirely agree. Vandenberg has not sustained his burden of proof. It may very well be that PCH was in fact acting as the catalyst, to the exclusion of anything else in the composition, whatever it contained, but the proofs have not established that with the degree of certainty required in cases of this kind. * * *
>
> * * * * * * *
>
> The material being tested as a catalyst here was not PCH. While it may have been present, it cannot have been known with a reasonable degree of certainty that it was responsible for whatever catalysis was produced (and we have assumed, arguendo, that there was such) considering the other possible catalysts which might have been present in the mixture. It was incumbent on Vandenberg to eliminate such other possibilities in order to establish the effectiveness of PCH as a catalyst.

[3] Here too, the proof of effectiveness of the combination of SAS and di-ethylene oxide adduct of 2-butyne-1,4-diol alone as a nickel brightener must be found deficient in view of the fact the evidence introduced shows it to have been used only in admixture with substantial quantities of other materials, both known and unknown.

While the above observation disposes of all panels relied on, it is particularly true of certain panels and test results relied on by Clauss. It appears from the record and Clauss' brief that Tomaszewski prepared panels 19, 21, 60 and 62 by placing amounts of Exhibit 1 in nickel plating baths *already containing* quantities of other Udylite commercial brighteners.[13] **[4]** We do not think the use of SAS and quantities of Exhibit 1 in plating baths containing other commercial nickel brightener materials necessarily establishes that the di-adduct-SAS combination itself produced a bright nickel.

Our review of the record in light of Clauss' contentions satisfies us that the Board did not err in awarding priority to Foulke. The decision is affirmed.

AFFIRMED.

U.S. Court of Customs and Patent Appeals

IN RE JEAN MAURICE GAZAVE

No. 7684. Decided June 22, 1967

[54 CCPA —; 379 F.2d 973; 154 USPQ 92]

1. PATENTABILITY—UTILITY—EVIDENCE—PROOF OF CREDIBLE UTILITY.

"* * * appellant's assertions of usefulness in his specification appear to us to be believable on their face and straightforward, at least in the absence of reason or authority in variance. As the specification demonstrates, certain principles relating to materials possessing vitamin P activity have been delineated by earlier workers in the art. As we see it, appellant discloses nothing more than that his synthetic compounds possess properties in common with naturally occurring vitamin P materials, and are useful in treating manifestations of vitamin P deficiency including various vascular disorders, capillary fragility and the like. In one example, for instance, appellant states that 'vascular rupture' was 'successfully treated' with 7-ethoxyisoflavone in a specifically described carrier, and compares that compound favorably with rutin, a known bioflavenoid having vitamin P activity, in the treatment of vascular disorder. Appellant also presented to the Board, without contradiction, evidence that a wide variety of bioflavenoids, compounds which differ from those recited in the claims principally in the presence of a phenyl radical in position 2 rather

[13] Panels 19 and 21, for example, were plated with SAS-containing "514" solution (which also contains Udylite brighteners "#5" and "#1RL" and produces bright nickel without additional brighteners being added) to which an amount of Exhibit 1 was added.

than position 3, are known to have vitamin P activity and act to ameliorate capillary fragility, lending some small, further measure of credence to his specific assertions of usefulness."

2. SAME—SAME—SAME—SAME.

"Appellant does not challenge the authority of the Patent Office *in appropriate circumstances* to require reasonable evidence relating to the 'usefulness' that is disclosed and claimed for his particular isoflavones to be used on human beings. Nor do we here. But we agree with appellant that, on the facts of this case, the Patent Office is in effect seeking to require too much proof of the asserted usefulness. The Examiner and Board have simply given us inadequate reason to disbelieve the statements and evidence of usefulness appellant has provided in his specification with respect to LV104Na and the 7-ethoxy compound, as well as the other compounds disclosed. The additional affidavit evidence he has submitted is consistent with and convincingly corroborates those assertions. We have considered the various objections to the evidence made by the Examiner and Board. We think those objections either have been answered by appellant or are of such a relatively minor nature as not to affect our conclusion that appellant has established prima facie that the compounds will function as disclosed and claimed."

REVERSED.

Albert L. Jacobs, *Albert L. Jacobs, Jr.* (*James W. Dent*, of counsel) for appellant.

Joseph Schimmel (*S. Wm. Cochran*, of counsel) for the Commissioner of Patents.

Before WORLEY, *Chief Judge*, and RICH, SMITH, and ALMOND, *Associate Judges*

WORLEY, *Chief Judge*, delivered the opinion of the court.

This appeal is from the decision of the Board of Appeals affirming the Examiner's rejection of process claims 1–9 and composition claims 10–13 [1] for "lack of proof of therapeutic utility."

The application discloses therapeutic compositions containing certain isoflavone compounds of the formula

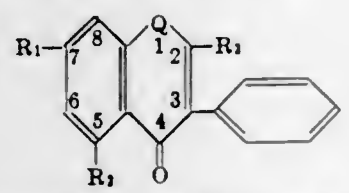

where R_1 may be a hydroxyl (—OH) or an alkoxy group; R_2 may be hydrogen or hydroxyl; R_3 may represent hydrogen, or a carboxyl radical (—COOH) which may be free, esterified or in salt form.

As to the manner in which those compounds are useful, the specification states:

* * * The chief therapeutic uses of the novel compounds include the treatment of vascular disorders, and P-hypovitaminosis [vitamin deficiency] conditions. Some of the compounds further possess anti-inflammatory properties.

Applicants' investigations on synthesis products pertaining to isoflavones as a group, have demonstrated that 7-hydroxyisoflavone and derivatives thereof possess provitaminic properties in regard to vitamine P (or C2) in the sense concerning these properties which have been defined by Szent-Gyorgy and Jean-Louis Parrot. Vitamine P (or C2) is defined by these authors as a compound combining the following properties:

The property of economizing and/or protecting adrenaline;

The property of economizing ascorbic acid (vitamine C);

The property that a combination of vitamines P and C eliminates scurvy [2] in a scorbutic animal where vitamine P alone is inactive and vitamine C alone has weak activity even in high doses. This property has been verified by histological tests involving deficient animals exposed to purely synthetic diets.

The property of increasing tissual and vascular resistance, the rate of increase being moderate in the healthy human or animal subject, and considerable in the deficient subject.

The compounds of the invention have been found to possess the above basic set of properties. They are especially well suited for the treatment of various circulatory disorders, especially blood vessel rupture, heightened blood pressure, meningeal and cerebral haemorrhage, purpura, scorbutic phenomena, Barlow's disease, and other pathological conditions. Broadly speaking the products of the invention are applicable in connection with all manifestations of P-hypovitaminosis, including minor capillary fragility, varicosis, haemorrhoids, local and generalized inflammation, mainly of vascular origin such as phlebitis, periphlebitis, etc.

The specification continues with a disclosure of several specific compounds. Exemplary are 7-ethoxy-2-carboxyl-isoflavone, said to have the "provitaminic characteristics" heretofore defined "to a very marked degree"; 5,7-dihydroxy-isoflavone and 5,7-dihydroxy-2-carbethoxy isoflavone, said to be "a powerful factor in the economy of ascorbic acid"; 7-ethoxy-2-carbethoxy-isoflavone and 7-ethoxy-5-hydroxy-2-carbethoxy-isoflavone which in addition to their "general provitaminic properties (a high economy factor for vitamine C, increase in tissual and vascular strength)" are said to have "the property of normalizing hydrosaline exchanges at the capillary level, especially when applied percutaneously"; 7-hydroxy-2-carbethoxy-isoflavone, said to have "good provitaminic characteristics" of the type described; and 7-ethoxy isoflavone, said to be "a factor in the economy of ascorbic acid," to increase "tissual and vascular resistance as well as normalizing hydrosaline exchanges at the capillary level when applied percutaneously," and to exhibit "a high anti-inflammatory activity" on a general and local basis.

After setting forth the mode of administration in human therapy (e.g. orally, cutaneously, parenterally) in dosages ranging from 5 to 150 mg. per day, the specification concludes with six examples relating to "biological experiments" and "therapeutic applications" employing two specific compounds: 7-ethoxy-isoflavone and the sodium salt of 5,7-dihydroxy-2-carboxy-isoflavone (hereafter LV104Na).

Example 1 describes how the vitamin P activity of LV104Na was determined in guinea-pigs, a test animal "known to be susceptible to a form of scurvy fully comparable to the human form of the disease, both as regards the clinical manifestations and attendant histological disorders." The test animals were initially fed a diet "comprising all the basic food principles including sufficient doses of ascorbic acid [vitamin C]" as well as other vitamins, then were subjected to a "scorbutic" diet which decreased the capillary resistance of all animals to 10 cm. Hg as opposed to 30 cm. Hg in the normal animal. An oral dose of 1 mg./day/100 g. animal weight of LV104Na was administered to one half the deficient animals, while the other half remained on the scorbutic diet as controls. Six of the 10 control animals died of "haemorrhage effects," all showing a capillary resistance less than 10. Nine out of ten of the LV104Na-tested animals survived (the single death resulting from "anorexia, not haemorrhage"), and all showed normal capillary resistance after 5 to 7 days of treatment with LV104Na. Various degenerative phenomena were observed in a histological examination of the slaughtered control animals, while the treated animals, like normal animals, showed no such impairments.

[1] Appearing in Serial No. 83,159, filed January 17, 1961, entitled "Therapeutic Compositions Comprising Isoflavone Compounds."

[2] According to Webster's New International Dictionary, 2nd edition, 1949 "scurvy" is a "disease characterized by a tendency to hemorrhage, esp. into the skin and mucous membranes * * *. It results from a lack of vitamin C."

Examples 2–6 describe clinical treatment of human beings afflicted with "minor capillary fragility," "vascular rupture," "vitaminic deficiency," "haemorrhage" and "varicosis," respectively, with specific compositions containing, among other things, LV104Na and/or 7-ethoxy-isoflavone.

The subject matter is reflected in claim 1:

1. The method of treating vascular, inflammatory and vitamine-P deficiency disorders, which comprises administering to the disordered organism at least one isoflavone compound selected from within the group consisting of 7-alkoxy-isoflavones, 7-hydroxy-isoflavones, 7-hydroxy-2-carboxy-isoflavones and the sodium salt thereof, 7-hydroxy-2-carbalkoxy-isoflavones, 7-alkoxy-2-carboxy-isoflavones, 7-alkoxy-2-carbalkoxy-isoflavones, the sodium salts of the 7-alkoxy-2-carboxy-isoflavones, 5-7-dihydroxy-isoflavone, 5-7-dihydroxy-2-carboxy-isoflavone and the sodium salt thereof, 5-7-dihydroxy-2-carbalkoxy-isoflavones, wherein the alkoxy groups and the alkoxy portions of the carbalkoxy groups contain no more than 5 carbon atoms.

Only claims 5–9 are specifically directed to the treatment of human beings, reciting the treating of vascular and vitamin P deficiency disorders by "administering to the disordered human organism" certain amounts of the 7-ethoxy and LV104Na compounds of Examples 1–6, while claims 10–13 relate to therapeutic compositions containing those compounds.

Faced with the recitations in appellant's specification as above set forth, the Examiner initially rejected the claims for "absence of clear, convincing, scientific evidence that the composition is safe and effective for all the purposes intended." He found "no showings in the case of statistically significant therapeutic treatments of *vascular disorders*, by the claimed methods, with lack of toxicity to the patient, when applied to humans and animals suffering from *vascular disorders*" [emphasis supplied], viewing *In re Krimmel*, 48 CCPA 1116, 292 F.2d 948, 130 USPQ 215; *In re Novak*, 49 CCPA 1283, 306 F.2d 924, 134 USPQ 335; and *Commonwealth Engineering Co.* v. *Ladd*, 199 F. Supp. 51, 131 USPQ 255, as supporting the necessity for proof of usefulness.

While arguing that the specification itself contains sufficient evidence of usefulness, appellant submitted an affidavit of a Dr. Bernal, cardiologist at the Rothschild Hospital in Paris, describing the clinical use of LV104Na in treating vascular disorders including capillary fragility. Bernal stated:

* * * * * * *

2. He is well acquainted with the literature and prior work done in connection with the circulatory importance of the capillaries of the human body *and the significance of capillary permeability and resistance in various disease conditions as especially related to vascular diseases;* he is further aware that various disease conditions cause a lowering of capillary resistance in particular, and that *measurements of capillary resistance are highly useful as a guide in the determination of the severity of the disease condition of a particular patient and as a diagnostic aid in determining whether a patient has improved as a result of administration of medication*, and it is in this way possible to determine when the medication has normalized capillary resistance and capillary permeability.

3. While many diseases cause a marked or drastic lowering of capillary resistance and capillary permeability, there are too many variables in patients with acute or highly painful disease conditions due to relatively rapid and erratic changes that occur both during the course of the disease and its treatment so that such patients and disease conditions have been eliminated from consideration in connection with the clinical work hereinafter set forth and *only patients with certain chronic diseases have been selected which can be and have been under observation and control for a substantial period of time* and among these patients are diabetic patients, who often have capillary fragility and in whom the lowering of capillary resistance is usual along with vascular impairments, arthritis of the lower limbs, high blood pressure, coronaritis and especially diabetic retinopathies, as well as patients having lowered capillary resistance due to other arterial conditions without high blood pressure, arteriosclerosis and chronic cardiac insufficiency; thus, the patients were diabetics complicated by vascular compaints, patients with chronic arterial diseases such as atheroma, cases of cardiac insufficiency and cases of venous diseases such as varicose veins and hemorrhoids, these cases being classified for present purposes as cases resulting from cardiology (20 cases) and cases resulting from ophthalmology (24 cases).

4. Of the 44 cases treated with LV104Na in accordance with the invention in the above-identified application, important and lasting *increase of capillary resistance was obtained in 40 cases (91%)* and when using the LV104Na as the active therapeutic agent by oral, intramuscular and intravenous routes of administration, *in no case was there any evidence of intolerance, allergy, inflammation or toxicity.*

5. From the group of 44 patients referred to above, the following case histories are typical [there follows a short history of 5 patients, of which the following two are illustrative]:

(*a*) Marguerite M., 64 years of age, observed since 1955, diagnosis—arterial disease (angina), high blood pressure and change at the back of the eyes with lowering of capillary resistance to 20. After intravenous administration at the rate of 3 per week, the capillary resistance rose to 30 on the fourth day and persisted for the full fifteen days of the treatment.

(*b*) Eugene A., 67 years of age, under observation for high blood pressure with a capillary resistance less than 20. Upon treatment with intravenous injections at 48-hour intervals, the capillary resistance rose above 30 and when the treatment was discontinued the capillary resistance dropped again and upon the oral administration of three tablets per day for fifteen days the capillary resistance again rose above 30. [Emphasis supplied.]

In his first answer, the Examiner criticized the examples in appellant's specification, finding that they

* * * do not contain sufficient data based on controlled tests involving both animals and humans which would enable others of ordinary skill in the art to accept the allegations as obviously valid and correct. * * *

He also rejected the Bernal affidavit as adequate proof of utility, reasoning:

* * * [1] the affidavit does not contain sufficient examples and data based on controlled tests which would enable others skilled in this art to arrive at their own conclusion as to whether or not the invention would function as disclosed and claimed. [2] The affidavit does not indicate the LV104Na was the *sole* active component employed or that the tests involved controls. Furthermore, even assuming arguendo that the single compound reported in the affidavit was based on valid tests, [3] proof that the compound is useful for treating capillary fragility in humans can hardly be considered as support for claims for treating vascular, inflammatory, and vitamin-P deficiency disorders in animals and humans by employing the specific compound of the affidavit or the other isoflavone derivatives claimed.

Thereupon, appellant submitted a second affidavit of Bernal, who stated that he

* * * hereby confirms and corroborates the fact that the said substance LV104Na was the sole and only active component employed in the product used for carrying out the tests referred to in the forty-four clinical cases * * *

Bernal further averred that

While no side-by-side comparative controls existed in the forty-four cases referred to, such were not necessary or required as all forty-four cases were well and conclusively established diagnostically * * *.

In a second answer, the Examiner appears to have accepted Bernal's statements at face value, but proceeded to propound other objections to the first affidavit, stating

* * * there remains no showing on record that all of the claimed compounds in all of the claimed amounts would be safe and effective for all of the conditions

allegedly benefited. Claims 4–6 which are drawn to the compound set forth in the affidavit remain unpatentable in that the affidavit does not state what amounts were given or that all vascular conditions or all conditions resulting from a deficiency of vitamin P are improved by the administration of the claimed compound.

The Board agreed in substance with the Examiner's objections to the evidence presented in the specification and affidavits, adding not a few objections of its own.

It is true, as the Examiner and Board observed, that this court held in *In re Novak:*

> In our opinion, when an applicant bases utility for a claimed invention on allegations of the sort made by appellants here, unless one with ordinary skill in the art would accept those allegations as obviously valid and correct, it is proper for the examiner to ask for evidence which substantiates them. * * *

There the Examiner gave valid reasons for doubting the efficacy of appellants' compositions and, no evidence appearing to refute those doubts and corroborate the assertions of usefulness, we affirmed.

It is evident that the amount of evidence required depends on the facts of each individual case. In *Bluestone* v. *Schmerling*, 46 CCPA 842, 265 F.2d 948, 121 USPQ 417, we assessed Bluestone's argument that Schmerling's specification was not a proper constructive reduction to practice:

> Appellant by his arguments and by his reliance on *Smith* v. *Bousquet*, [27 CCPA 1136, 111 F.2d 157, 45 USPQ 347] which decision was concerned primarily with actual, rather than constructive, reduction to practice, appears to contend that it was incumbent on Schmerling to prove that the compounds will function as stated in his application. *We do not understand that to be the law. In the absence of any apparent reason why the compounds disclosed will not so function, or of any evidence showing that they actually do not, the statements in the application are generally deemed sufficient. In re Chilowsky*, 43 CCPA 775, 229 F.2d 457, 108 USPQ 321. [Emphasis supplied.]

In *Chilowsky*, where the sufficiency and operativeness of a disclosure relating to nuclear fission were in issue, we stated:

> In our opinion the same principles should apply in determining operativeness and sufficiency of disclosure in applications relating to nuclear fission as in other cases. *There appears to be no basis in the statutes or decisions for requiring any more conclusive evidence of operativeness in one type of case than another. The character and amount of evidence needed may vary, depending on whether the alleged operation described in the application appears to accord with or to contravene established scientific principles or to depend upon principles alleged but not generally recognized; but the degree of certainty as to the ultimate fact of operativeness or inoperativeness should be the same in all cases.*
>
> Thus, in the usual case where the mode of operation alleged can be readily understood and conforms to the known laws of physics and chemistry, operativeness is not questioned, and no further evidence is required. On the other hand, if the alleged operation seems clearly to conflict with a recognized scientific principle as, for example, where an applicant purports to have discovered a machine producing perpetual motion, the presumption of inoperativeness is so strong that very clear evidence is required to overcome it. A third type of case was involved in *In re Harry E. Perrigo*, 18 CCPA (Patents) 1323, 48 F.2d 965, 9 USPQ 152, wherein the device involved was of such a nature that it could not be tested by any known scientific principles. In such a case, as we there held, it is incumbent on the applicant to demonstrate the workability and utility of the device and make clear the principles on which it operates. [Emphasis supplied.]

Appellant's discovery here does not appear to us to be of such a "speculative,"[3] abstruse or esoteric nature that it must inherently be considered unbelievable, "incredible," or "factually misleading."[4] Nor

[3] *In re Ruskin*, 53 CCPA 872, 354 F.2d 395, 148 USPQ 221.

[4] *In re Citron*, 51 CCPA 852, 325 F.2d 248, 139 USPQ 516; *In re Citron*, 51 CCPA 859, 325 F.2d 254, 139 USPQ 520.

does operativeness appear "unlikely" or an assertion thereof appear to run counter "to what would be believed would happen by the ordinary person" in the art.[5] Nor does appellant's field of endeavor appear to be one where "little of a successful nature has been developed" or one which "from common knowledge has long been the subject matter of much humbuggery and fraud."[6] Nor has the Examiner presented evidence inconsistent with the assertions and evidence of operativeness presented by appellant.[7]

[1] To the contrary, appellant's assertions of usefulness in his specification appear to us to be believable on their face and straightforward, at least in the absence of reason or authority in variance. As the specification demonstrates, certain principles relating to materials possessing vitamin P activity have been delineated by earlier workers in the art. As we see it, appellant discloses nothing more than that his synthetic compounds possess properties in common with naturally occurring vitamin P materials, and are useful in treating mainifestations of vitamin P deficiency including various vascular disorders, capillary fragility and the like. In one example, for instance, appellant states that "vascular rupture" was "successfully treated" with 7-ethoxy-isoflavone in a specifically described carrier, and compares that compound favorably with rutin, a known bioflavenoid having vitamin P activity,[8] in the treatment of vascular disorder. Appellant also presented to the Board, without contradiction, evidence that a wide variety of bioflavenoids, compounds which differ from those recited in the claims principally in the presence of a phenyl radical in position 2 rather than position 3, are known to have vitamin P activity and act to ameliorate capillary fragility, lending some small, further measure of credence to his specific assertions of usefulness.

[2] Appellant does not challenge the authority of the Patent Office *in appropriate circumstances* to require reasonable evidence relating to the "usefulness" that is disclosed and claimed for his particular isoflavones to be used on human beings. Nor do we here. But we agree with appellant that, on the facts of this case, the Patent Office is in effect seeking to require too much proof of the asserted usefulness. The Examiner and Board have simply given us inadequate reason to disbelieve the statements and evidence of usefulness appellant has provided in his specification with respect to LV104Na and the 7-ethoxy compound, as well as the other compounds disclosed.[9] The additional affidavit evidence he has submitted is consistent with and convincingly corroborates those assertions. We have considered the various objections to the evidence made by the Examiner and Board. We think those objections either have been answered by appellant or are of such a relatively minor nature as not to affect our conclusion that appellant

[5] *In re Pottier*, 54 CCPA —, — F.2d —, 153 USPQ 407.

[6] *In re Oberweger*, 28 CCPA 749, 115 F.2d 826, 47 USPQ 455. See also *In re Irons*, 52 CCPA 938, 340 F.2d 974, 144 USPQ 351.

[7] *In re Corneil*, 52 CCPA 1710, 347 F.2d 557, 145 USPQ 697; *In re Corneil*, 52 CCPA 1718, 347 F.2d 563, 145 USPQ 702; *In re Corneil*, 52 CCPA 1736, 347 F.2d 571, 145 USPQ 707; *In re Wooddy*, 51, CCPA 1317, 331 F.2d 636, 141 USPQ 518.

[8] Rutin is defined by Dorland's Illustrated Medical Dictionary, 23rd edition (1958), as "A crystalline alcohol, $C_{27}H_{30}O_{16}$ * * *. It has the properties of vitamin P and has been used to reduce capillary fragility and thus prevent hemorrhage in patients with hypertension."

According to Kirk and Othmer, Encyclopedia of Chemical Technology, vol. 3, p. 603 (1949), rutin has * * * attracted interest because it is nontoxic and has the property of reducing increased capillary fragility in man to normal, a role that is distinct from ascorbic acid (vitamin C). Rutin has proved effective in certain hemorrhagic conditions in which capillary fragility or permeability is involved and it may be important in preventing vascular accidents, which occur in persons of high blood pressure. * * *

[9] Compare *Commonwealth Engineering Co.* v. *Ladd*, 199 F. Supp. 51, 131 USPQ 255, where like *Novak*, reasons for believing the claimed subject matter inoperative were given by the Examiner.

has established prima facie that the compounds will function as disclosed and claimed.

The decision is reversed.

REVERSED.

PATENT SUITS

Notices under 35 U.S.C. 290; Patent Act of 1952

2,555,962, Alice Einstein, PROCESS FOR MANUFACTURING WEARING APPAREL, **filed** Mar. 12, 1968, D.C., S.D.N.Y., Doc. 68–C–1045, *Alice Einstein* v. *Betty Lane, Inc.*

2,571,435, A. L. Flamm, GAS FUELED CIGAR LIGHTER, **filed** Nov. 19, 1962, D.C., S.D.N.Y., Doc. 62–C–3805, *Ronson Corporation* v. *Bentley Lighter Corporation*. Stipulation and order of dismissal with prejudice, Apr. 8, 1968.

2,611,813, Sharpless and Eichert, Jr., MAGNETIC DATA STORAGE SYSTEM, **filed** Aug. 25, 1967, D.C., N.D. Ga. (Atlanta), Doc. 11165, *Technitrol, Inc.* v. *Collins Radio Co.* On Feb. 1, 1968, this case was transferred to the United States District Court for the Northern District of Iowa, Feb. 6, 1968.

2,619,420, T. H. Jukes, ANIMAL AND POULTRY FEED CONTAINING AUREOMYCIN MASH, **filed** May 29, 1967, U.S.C.A., 4th Cir., Va. (Richmond), Doc. 11,435, *American Cyanamid Company* v. *Nopco Chemical Company and Quality Feeds, Inc.* Judgment of the District Court is affirmed, Jan. 11, 1968.

2,706,697. (See Re. 24,165.)

2,750,727, P. M. Wright, AUTOMATIC HEADER CONTROL MEANS, **filed** Jan. 12, 1968, D.C., N.D. Iowa (Sioux City), Doc. 68–C–3003–W, *Roper-Wright Mfg. Co., Inc. and Preston M. Wright* v. *Noble Mfg. Co.*

2,992,733, Buus and Luedtke, MAGNETIC PULLEY AND PERMANENT MAGNET THEREFOR, **filed** Apr. 19, 1966, D.C., N.D. Ill (Chicago), Doc. 66c691, *Indiana General Corporation* v. *Ericz Manufacturing Co.* Stipulation court enters a final order dismissing cause with prejudice, Mar. 2, 1967.

3,069,695, R. C. Hegerfeld, SWIMMING POOLS, **filed** June 23, 1967, D.C., N.D. Ill. (Chicago), Doc. 67c1083, *General Pools Corporation* v. *Hallmark Pool Corp et al.* Consent judgment, dismissed with prejudice, Feb. 5, 1968. **Same, filed** June 23, 1967, D.C., N.D. Ill. (Chicago), Doc. 67c1084, *General Pool Corporation* v. *Al Oko, doing business as Oko Pool Construction Co.* Consent judgment, dismissed with prejudice, Feb. 5, 1968. **Same, filed** July 17, 1967, D.C., N.D. Ill. (Chicago), Doc. 67c1234, *General Pools Corp.* v. *Sterling Industires, Inc.* Consent judgment, dismissed with prejudice, Feb. 5, 1968.

3,104,121, Nordin and Hall, HIGH PRESSURE SEAL ASSEMBLY, **filed** Nov. 3, 1967, D.C., S.D. Tex. (Houston), Doc. CA67–H–842, *Thornhill-Craver Company* v. *Industrial Ceramics, Inc. et al.* Consent judgment, defendant, Industrial Ceramics, has infringed said patent, Mar. 13, 1968.

3,154,484, J. W. Stoner, PROCESS AND APPARATUS FOR REGENERATING ION-EXCHANGE MATERIAL IN A WATER SOFTENING SYSTEM, **filed** Dec. 22, 1965, D.C., N.D. Ill. (Chicago), Doc. 65c2175, *Joseph W. Stoner* v. *Culligan, Inc.* Defendant's counterclaim is dismissed without prejudice against plaintiff. Judgment in favor of defendant, Jan. 18, 1968.

3,173,937, Moyerman and Ehman, MANUFACTURE OF ARSINIC ACIDS, **filed** Apr. 11, 1968, D.C.N.J. (Camden), Doc. C–346–68, *The Ansul Company* v. *Vineland Chemical Co., Inc. and Arthur Schwerdle.*

3,252,149, Welda, Richards, Berezin, Knoll, and Rosenblatt, DATA PROCESSING SYSTEM, **filed** Nov. 27, 1967, D.C., E.D.N.Y. (Brooklyn), Doc. 67C–1119, *Digitronics Corp.* v. *The New York Racing Assn. Inc. et ano.*

3,315,454, W. L. Carranza, SYNTHETIC BALING AND TYING TWINES, **filed** Apr. 2, 1968, D.C., S.D. Fla. (Miami), Doc. 68–375–Civ–EC, *UXMAL Corporation, Ltd.* v. *Phillips Petroleum Company.*

3,333,198, Mandell and Brownstein, TELEVISION CONVERTER FOR CATV SYSTEM, **filed** Apr. 15, 1968, D.C., W.D. Wash. (Seattle), Doc. 7661, *International Telemeter Corporation* v. *Hamlin International Corporation et al.*

3,335,092, K. E. Perry, OVEN CLEANER AND METHOD OF USING SAME, **filed** Dec. 21, 1967, D.C., N.D. Ill (Chicago), Doc. 67c2190, *Shelco, Inc.* v. *Boyle Midway, Inc., American Home Products Corp.*

Re. 24,165, P. Eisler, MANUFACTURE OF ELECTRIC CIRCUIT COMPONENTS; **2,706,697**, same, **filed** Jan. 21, 1963, D.C. Del. (Wilmington), Doc. 2553, *Technograph Printed Circuits, Ltd. and Technograph Printed Electronics, Inc.* v. *The Magnavox Corporation.* Reinstated Apr. 1, 1968, after dismissal stipulation, Apr. 17, 1967.

D. 202,878, Burke and Kingdon, BUILDING, **filed** Nov. 24, 1967, D.C., W.D. Ark. (Fort Smith), Doc. 2111, *Pizza Hut, Inc.* v. *Cleve Cotner, doing business as Cleve Cotner Monuments et al.* Consent decree adjudging patent valid; restraining and enjoining defendants; directing defendants to change design of alleged infringing structure in accordance with agreement of parties, Apr. 15, 1968.

D. 204,121, F. P. Briliando, BICYCLE SEAT, **filed** Apr. 10, 1968, D.C., S.D. Fla. (Miami), Doc. 68–403–Civ–TC, *Schwinn Bicycle Company* v. *Joannou Cycle Co., Inc and G. Joannou Cycle Co., Inc.*

D. 210,015, R. D. Kahn, INSECT ELECTROCUTING TRAP, **filed** Mar. 21, 1968, D.C., C.D. Calif. (Los Angeles), Doc. 68–469–FW, *Fedtro, Inc.* v. *Sunset House Corp. and L. P. Carlson.* **Same, filed** Apr. 11, 1968, D.C.N.J. (Newark), Doc. 341–68, *Fedtro, Inc.* v. *Spencer Gifts of Paramus, Inc. et al.* **Same, filed** Apr. 16, 1968, D.C. Mass. (Boston), Doc. 68–316–M, *Fedtro, Inc.* v. *Bandwagon, Inc.*

PLANT PATENTS

GRANTED AUGUST 20, 1968

Illustrations for plant patents are usually in color and therefore it is not practicable to reproduce the drawing.

2,828

HYBRID TEA ROSE

Louis M. Rantz and Simone Rantz, née Gastaldi, both of Roseraie des Breguieres, Cros-de-Cagnes, France

Filed Nov. 30, 1966, Ser. No. 598,130

Claims priority, application France, Feb. 28, 1966, 7,750

1 Claim. (Cl. Plt.—20)

1. A new and distinct rose variety of the class of the tea hybrid, characterized by its large and beautiful flowers between Currant Red and Blood Red in color with tonalities of Red Rose in the center of the flower, its suitability for cut flower production and for ornamental plants, with a dense and bushy vegetation, large and dark foliage, highly productive in cut flower culture, its resistance to disease, ease of propagation and suitability for ornamental purposes, substantially as described and specified.

2,829

ROSE PLANT

David L. Armstrong and Herbert C. Swim, Ontario, Calif., assignors to Armstrong Nurseries, Inc., Ontario, Calif., a corporation of California

Filed Feb. 8, 1967, Ser. No. 614,756

1 Claim. (Cl. Plt.—18)

1. A new and distinct variety of rose plant of the grandiflora class, substantially as herein shown and described, characterized particularly as to novelty by the unique combination of a vigorous and attractive plant habit, intermediate upright and spreading, medium to large dark green, leathery, semi-glossy and disease resistant foliage, a very floriferous habit, with the flowers borne on medium length stems and borne both singly and in small clusters typical of the grandiflora class, attractive urn-shaped flower buds, and a relatively high-centered open flower form and showing petals reflexed in a manner similar to those of "Charlotte Armstrong," a flower size from medium to large, with from 25 to 35 petals, and a distinctive and attractive flower color ranging between Neyron Rose and Dawn Pink, with darker pink on the reverse side of the petals.

PATENTS

GRANTED AUGUST 20, 1968

GENERAL AND MECHANICAL

3,397,406
GOWN TIE
Merry G. Leach, 406 W 4th St., Alton, Ill. 62002
Filed Apr. 10, 1967, Ser. No. 629,675
7 Claims (Cl. 2—96)

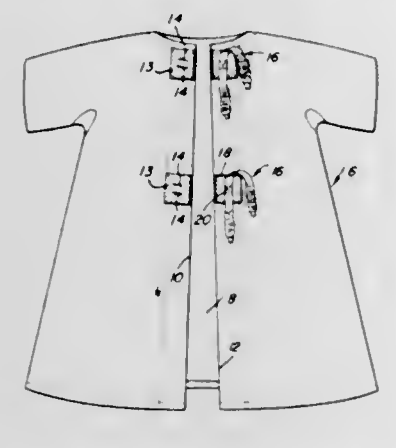

The tie shown separably joins edge portions of a garment, a hospital patient's gown for example, wherein the ends of the tie are laced through buttonholes and then tie into a knot. It comprises a fabric sleeve encasing an elastic band whose ends are stitched to corresponding ends of the sleeve. The band is shorter than and gathers the longer sleeve into anti-slipping folds. This thus elasticized sleeve permits a nurse to quickly tie the ends into a knot but thwarts the efforts of a disturbed patient to untie and disrobe.

3,397,407
VENTILATED TROUSERS
John P. Gallagher, 2415 Foxhall Road NW., Washington, D.C. 20007
Filed June 16, 1966, Ser. No. 557,996
1 Claim. (Cl. 2—227)

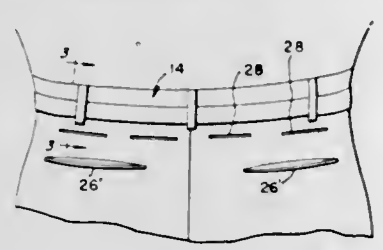

A plurality of elongated slot-like openings are provided in trousers just below the belt band which openings have their long axes generally parallel to the belt band and fabric internal covers provided for the slots so that they present a neat appearance when the slots are open during movement of the wearer.

3,397,408
WATER CLOSET
E Chris Skousgaard, Box 805, Lake Arrowhead, Calif. 92352
Filed Aug. 24, 1965, Ser. No. 482,114
9 Claims. (Cl. 4—26)

A water closet employing a tank closed at its upper end and having an open connection to the domestic water supply adjacent its bottom end including an outlet adjacent the bottom end of said tank normally closed by a float valve; valve means, preferably remotely from said tank for applying domestic water pressure to the bottom of a piston associated with the tank, said piston being spring biased towards a position to permit closing of said outlet valve by said float, but operating under domestic water pressure to engage and dislodge said float; the outlet being connected to a water closet bowl; and in which said out-

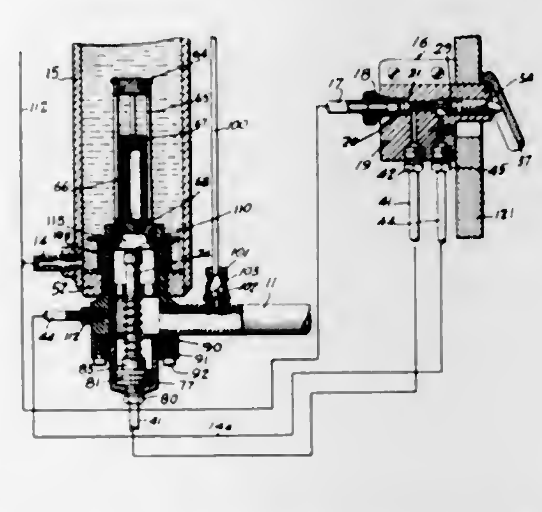

let is larger than said inlet to permit draining of said tank on flushing and the diameter of the piston is greater than the diameter of the outlet valve to permit dislodging of the float. Needle valve means are incorporated in the outlet mechanism to prevent surging and the entire mechanism is substantially noiseless as the pressures in the tank approach equilibrium as the float reseats with the result that the reseating of the float valve is accomplished from substantially full open to closed position without gradual tapering off of water discharge.

3,397,409
TANK DISCHARGE VALVE
Lionel I. Schlank, Wyncote, Pa., assignor to Keystone Brass & Rubber Co., Inc., Hatboro, Pa., a corporation of Pennsylvania
Filed Mar. 17, 1966, Ser. No. 541,446
2 Claims. (Cl. 4—57)

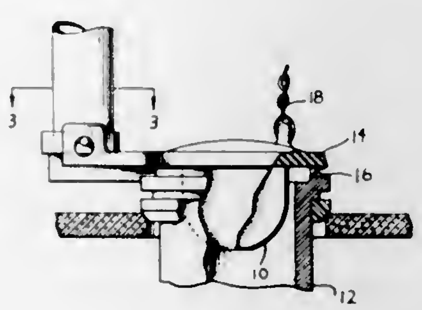

A ball valve for a toilet flush tank characterized by a very flexible and loose mounting whereby the ball valve will always seat perfectly. The valve is made in two pieces; one secured to the overflow pipe and serving as a support, and another piece including the ball valve connected, and freely movable relative to the first piece.

3,397,410
ROTARY VANE PRESSURE TOILET
Richard T. Cella, 35 Park Ave., New York, N.Y. 10016
Filed Feb. 4, 1966, Ser. No. 525,095
2 Claims. (Cl. 4—77)

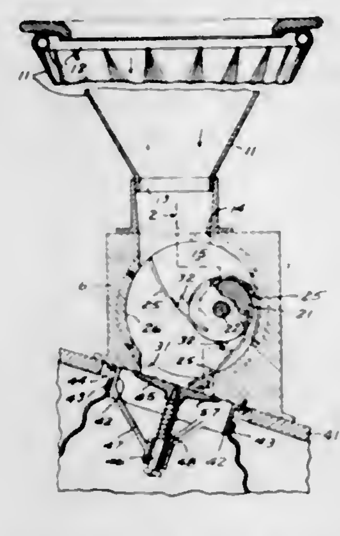

A mechanically operated toilet including a housing having a cylindrical chamber with a peripheral inlet opening disposed beneath the toilet bowl, a peripheral outlet opening, a rotor in said chamber having flexible radial vanes to be contacted and flexed by said wall as they rotate, and displaced eccentrically in a direction to advance waste material with increasing pressure to said outlet opening, and a receiver having a spring loaded closure valve through which waste material from said outlet opening is forced under the pressure produced by said rotor.

3,397,411
PATIENT-SUPPORTING DEVICE FOR RADIOLOGICAL TREATMENTS
Guido Rossi, Milan, Italy, assignor to Generay-Generale Radiologica S.p.A., Monza, Milan, Italy, a company of Italy
Filed Sept. 20, 1966, Ser. No. 580,760
Claims priority, application Italy, Sept. 21, 1965, 21,079/65
4 Claims. (Cl. 5—66)

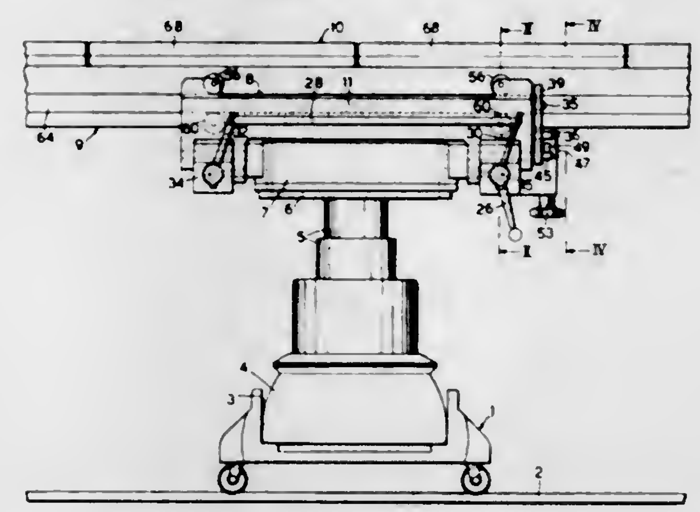

A support table for a patient having a horizontally movable base carrying a slide which is movable horizontally in a direction perpendicular to the base, a telescopic pillar being mounted on the base and supporting a head adapted for receiving a slidable beam thereon, the beam being retained by an openable clamp which is pivotably connected to the head and which can either lock the beam on the head or permit guidable displacement of the beam on the head. A patient supporting member composed of individual component parts is interengageable with the beam.

3,397,412
COLLAPSIBLE BOAT
Robert Swinburn Marshall, Riverdale, Greatford, near Stamford, and Frederick William Clegg, The Old Rectory, Greatford, near Stamford, England, assignors to Novotec Research Limited, Greatford, near Stamford, England, a corporation of the United Kingdom
Filed Dec. 15, 1966, Ser. No. 601,984
Claims priority, application Great Britain, Dec. 21, 1965, 54,073/65
4 Claims. (Cl. 9—2)

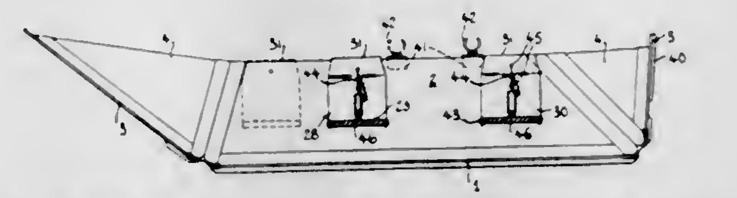

A collapsible boat comprising a quadrilateral bottom panel, spaced opposed quadrilateral side panels and end panels, watertight flexible connecting means between the bottom panel and the side and bow and stern end panels, and triangular panels connected between the side panels and end panels at each corner of the bottom panel by means of watertight flexible connection whereby the side panels and end panels may be folded inwards to overlie the bottom panel, and means to releasably maintain the opposed side walls in spaced relation. The triangular panels adjacent the stern end panel have two angles of approximately 45°, and the rear edges of the side panels are at an angle of approximately 45° to their bottom edges. When the stern end panel is erected it is substantially vertical.

3,397,413
NAVIGATIONAL MARKER
Cornelius G. Houtsma, Winchester, Mass. (% United States Coast Guard, First Coast Guard District, John F. Kennedy Federal Bldg., Government Center, Boston, Mass. 02203)
Filed Oct. 25, 1966, Ser. No. 589,470
4 Claims. (Cl. 9—8)

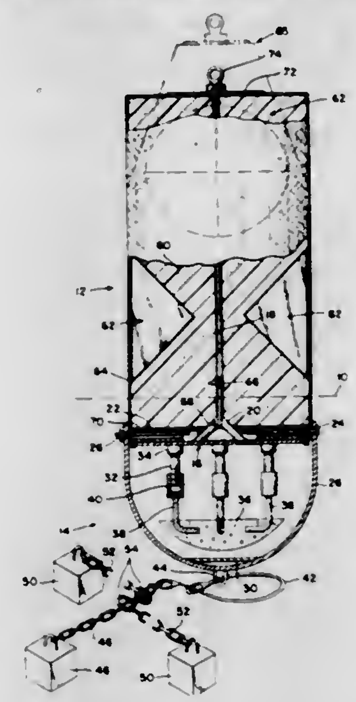

The present invention provides a unique and novel navigational marker which will maintain an upright position in slack water or in a moving current. A typical embodiment comprises a flotation member of foamed plastic, which may incorporate a radar reflector, and a concrete ballast in the form of a spherical segment. Balancing of the horizontal current forces is achieved by attaching the mooring line at a point on the submerged portion of the marker such that the area above that point is equal

to the area below that point. Vertical stability is provided by the downward force created as a result of the different water flows on the upper and undersides of the ballast.

3,397,414
HAND PADDLE
John L. Webb, 522 N. Towne Ave., Apt. 1, Claremont, Calif. 91711
Filed Apr. 10, 1967, Ser. No. 629,562
6 Claims. (Cl. 9—307)

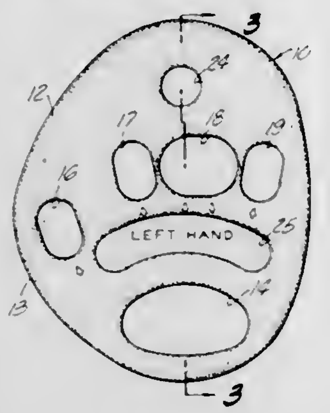

An apparatus for use by swimmers, surfers and the like to be attached to the hand of the user to increase the propulsion area of the hand without significantly increasing drag. A flexible member is provided having an opening for the wrist and a plurality of openings spaced therefrom for the fingers, which flexible member constitutes a substantially continuous area wider than that of the hand and fingers and yet controlled thereby and which has the added feature of springing away from the back of the hand when forced through the water to provide a second propelling area.

3,397,415
FULLY AUTOMATIC MACHINE FOR THE WORKING OF SOLE EDGES ON CRUDE SOLES
Hans-Otto Keller, Frankfurt am Main, Griesheim, Germany, assignor to Maschinenfabrik Moenus A.G., Frankfurt am Main, Germany, a firm
Filed Apr. 6, 1965, Ser. No. 445,918
Claims priority, application Germany, Dec. 19, 1964, M 63,568
24 Claims. (Cl. 12—86.65)

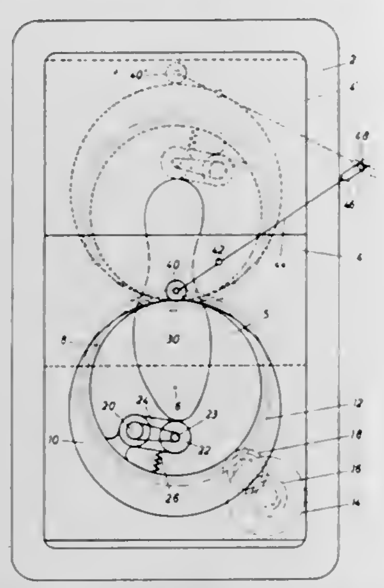

A base having a reciprocable slide therein provided with a circular opening in which an annular ring member is mounted which is rotatable about a center eccentric to the opening, an eccentric disk in the opening rotatable about the same center as the member, the shoe sole blank being fixedly mounted in the base below the slide with its longitudinal axis parallel with the axis of movement of the slide, a rotatable milling cutter carried by said ring member on an arm yieldably urged to engage the cutter with the edge of the sole, a control lever pivoted on the slide having one end engaging the edge of the eccentric disk and the other end journaled on the base, whereby the constantly enlarging radius of the eccentric disk will move the slide accordingly, means being provided for changing the effective length of the control lever to adjust the stroke of the slide according to the length of the sole, the cutter being continuously and automatically guided in an orbital and closed-ellipsoidal path around the sole compounded from its circular motion around the sole, the rotary motion of the ring, and the longitudinal motion of the ring.

3,397,416
SKI BOOT TREE
Aldo Celli, Milan, Italy, assignor of forty percent to Henry H. Gleisner, Pontiac, Mich., and twenty percent to Frank Mariano, Montreal, Quebec, Canada
Filed Feb. 14, 1967, Ser. No. 616,004
9 Claims. (Cl. 12—120.5)

A ski boot tree having independently adjustable toe clamps mounted upon a slidable bracket and stationary heel clamps for straightening soles of ski boots. Each toe clamp is adjustable through a pin and slot connection with the bracket that also permits swinging of the clamps towards and away from the bracket.

3,397,417
PULLING OVER AND LASTING OF SHOES
Jacob S. Kamborian, 1380 Soldiers Field Road, Boston, Mass. 02135, and Walter A. Vorn Berger, Medford, and James H. Arsenault, Whitinsville, Mass.; said Vorn Berger and said Arsenault assignors to said Kamborian
Filed July 16, 1965, Ser. No. 472,525
44 Claims. (Cl. 12—145)

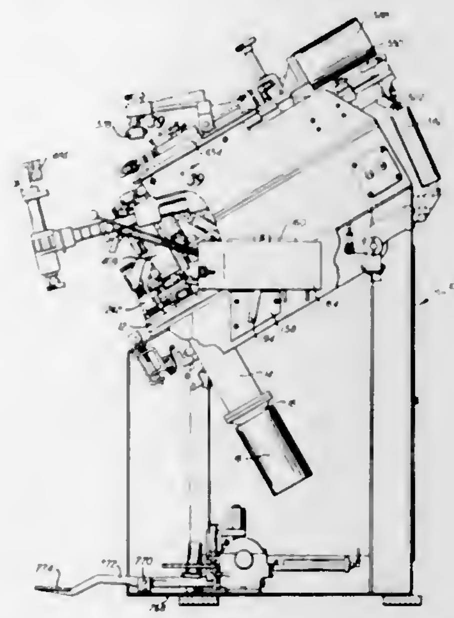

There is disclosed herein a machine for pulling and stretching the toe and forepart portions of a shoe upper about the corresponding portion of a last while the last and an insole secured to the last bottom are supported bottom-down, for applying cement to the insole and for wiping the margin of the stretched upper portions against the insole to adhesively attach the upper margin to the insole.

3,397,418
METHODS OF ASSEMBLY OF FOOTWEAR UPPERS
John Gorman Steadman, Bristol, and Raymond Charles White, Hanham, Bristol, England, assignors to Soundwell Investments Limited, Bristol, England
Filed Nov. 15, 1963, Ser. No. 323,972
Claims priority, application Great Britain, Nov. 18, 1962, 35,575/62
18 Claims. (Cl. 12—146)

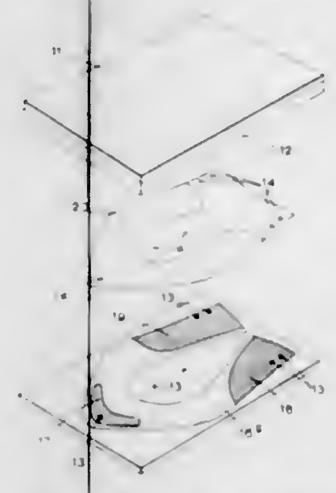

1. A method for producing a substantially flat shoe upper assembly which includes the necessary components connected together and is thereby substantially complete and ready for lasting, comprising the steps of: applying to at least some mating faces of substantially flat shoe upper components an adhesive having a dielectric loss at least as high as that of any of said components, locating said components in a flat condition in a jig means and maintaining them in correct relative position against unwanted displacement, activating the adhesive by electro-magnetic oscillations, and applying pressure to said components, thereby bonding said components together and providing a substantially flat shoe upper assembly which, save for the formation of further seams to impart three dimensional shape to the upper, is substantially complete and ready for lasting.

3,397,419
TOOL FOR FLOOR TREATING MACHINE
Nathaniel N. Okun, Baltimore, Md., assignor to The Cello Chemical Company, Baltimore, Md., a corporation of Maryland
Filed Nov. 18, 1966, Ser. No. 595,466
6 Claims. (Cl. 15—49)

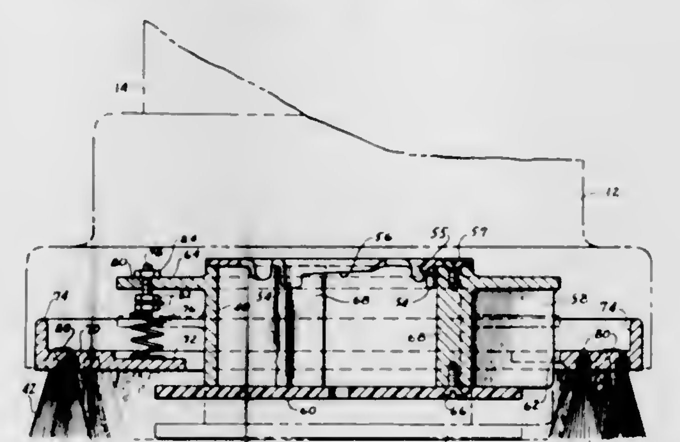

The invention is a tool useable on a floor waxing and polishing machine of the type having a circular brush, with the weight of the machine resting on the brush, the latter being readily detachable and changeable to another. The new tool avoids the problem of excessive friction when working on carpets and rugs. It comprises a tool hub carrying a circular support plate having a smooth bottom face, and an annular brush surrounding the support plate. The tool hub is readily detachably received in the machine, and is of substantial height, and the brush is vertically slidable on the hub so that it rests floatingly on a carpet, while the support plate bears the weight of the machine. Compression springs urge the brush downwardly somewhat, and screws are provided to adjust the force exerted by the springs.

3,397,420
SEWER SNAKE
Michael Schneider, 2038 Watson Ave., Alliance, Ohio 44601
Filed June 21, 1966, Ser. No. 559,319
1 Claim. (Cl. 15—104.3)

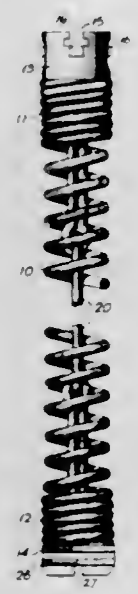

A sewer snake including a spiral wire positioned around a plurality of interconnected elongated chain links wherein the spiral wire forms a flexible shaft and the interconnected chain links form a positive and durable means of transferring torque therethrough as to a cleaning tool at one end thereof.

3,397,421
PROTECTOR FOR LIFT SEAL OF AUTOMOBILE HOIST
Cecil J. Goldsmith, 336 Wellington, Chicago, Ill. 60657
Filed May 17, 1966, Ser. No. 550,784
4 Claims. (Cl. 15—210)

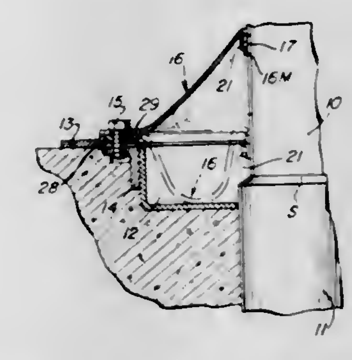

A flexible guard for protecting the lift seal of a floor mounted hoist is anchored to the floor at its outer edges and has its inner edges clamped in frictional wiping engagement with the plunger of the lift above the seal. Downward travel of the plunger draws the flexible guard into a collapsed condition characterized by an annular fold which collects foreign matter that would otherwise

fall into the pit in which the hoist is mounted and holds it away from the plunger and its seal. Upward travel of the plunger carries the inner edge portions of the guard upwardly until it is extended into a tent configuration that causes the collected foreign matter to fall down on the floor away from the pit.

3,397,422
SELF-CLOSING HINGE
Louis Youngdale, 302 Crescent Drive, Vista, Calif. 92083
Filed July 26, 1966, Ser. No. 567,939
9 Claims. (Cl. 16—180)

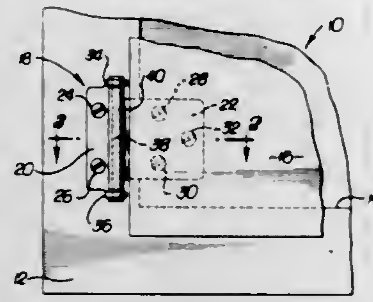

1. A cabinet hinge having two leaves, each of said leaves having provisions for attachment to relatively swingable cabinet elements; a hinge pin made of resilient material and having both ends secured to and mounted by one of said leaves; the other of said leaves having a knuckle extending about an intermediate portion of said hinge pin for movement about the hinge pin as an axis, and having clearance relative to the ends of said hinge pin to permit lateral deflection of said knuckle and said other leaf with accompanying flexure of the intermediate portion of said hinge pin; said hinge pin resiliently resisting such deflection and determining a normal mutual axis of angular movement of said leaves; said leaves being movable at least in one relative angular direction from an angular position corresponding to closed position; and companion cam means carried by the leaves respectively and operative to cause deflection of said knuckle as said leaves closely approach said closed position; said cam means producing maximum deflection when said leaves are away from said closed position; said cam means being positioned substantially to be concealed by said knuckle when said leaves are in closed position.

3,397,423
SINGEING MACHINE AND METHOD
Paul F. Burch, Rockford, Mich., assignor to Wolverine World Wide, Inc., a corporation of Michigan
Filed Feb. 7, 1966, Ser. No. 525,739
6 Claims. (Cl. 17—20)

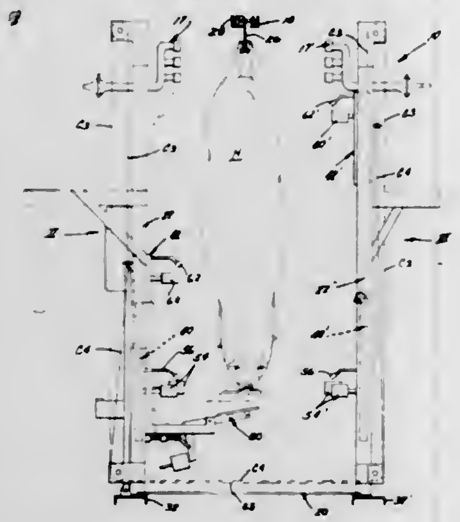

This specification discloses carcass singeing, especially for hogs, wherein the body and head portions are singed separately, the body portions being singed by alternately oscillating, vertically traveling burners on support carriages, and the head and neck portions being singed by directly opposite carriage mounted head burner means creating a high heat zone properly located by being elevated when a detector engages the hog snout.

3,397,424
PRESS FOR PRESSING OF FIBRE MATERIALS SUCH AS DRIED WOOD PULP, CELLULOSE, ETC.
Björn Olaf Rövde, Baerum, and Gunnar Stöeng, Oslo, Norway, assignors to Anth. B. Nilsen & Co. Limited A/S, Oslo, Norway
Filed Sept. 23, 1965, Ser. No. 489,595
Claims priority, application Norway, Sept. 25, 1964, 154,904
2 Claims. (Cl. 18—2)

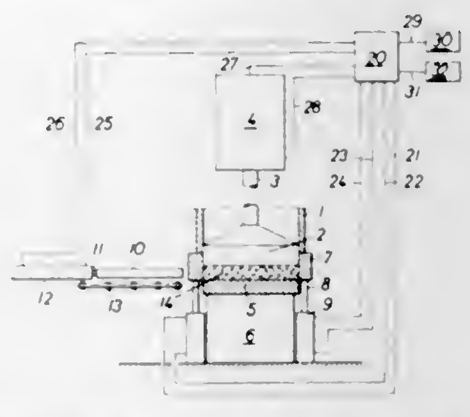

A press for fiber material having a base and a reciprocating ram cooperating with said base. A reciprocating frame surrounds the base and when such frame is in an upper position it encloses the fiber material to be pressed. Then when the top of the frame is located even or below the top surface of the base the final compression of the material takes place with the edges thereof free from the frame. The movements of the ram and frame are synchronized to accomplish the above compressions. A horizontally movable gripping device located at the exterior of the press can therefore start the removal of the pressed sheet as soon as the final compression is ended and as soon as the ram starts its upward movement thereby resulting in a faster operation of such presses.

3,397,425
EMBOSSING PRESS FOR GRAMOPHONE RECORDS
Alan Phillipson, Basil Harry Royston Spiller, Robin Smith, and Harry Cheesman, London, England, assignors to Decca Limited, London, England, a British company
Filed Sept. 11, 1964, Ser. No. 395,873
Claims priority, application Great Britain, Sept. 16, 1963, 36,328/63
16 Claims. (Cl. 18—5.3)

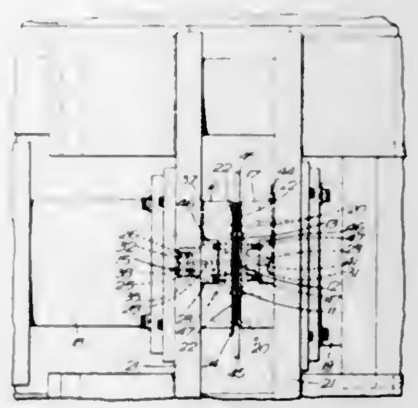

An embossing press for embossing sound tracks on blank preformed discs. Each disc, after cleaning, is fed between a pair of opposed die plates. A photoelectric sensing arrangement responds to the feeding of the disc

between the die to operate a double acting piston and cylinder assembly which moves a sensing pin axially through the central hole in the disc. The pin supports the disc during the embossing. The pin is also hollow, and air is passed through it so that a pneumatically operated switch which controls the moving together of the die plates is only actuated by the air pressure from the pin when the passage of the pin through the central hole is completed and the disc is held by the pin in a properly centered position for embossing.

3,397,426
APPARATUS FOR PRODUCING BULKY YARN AND ITS FABRICS
Yoshimasa Fujita, Keijiro Kuratani, and Keiichi Zoda, Saidaiji, Japan, assignors to Japan Exlan Company Limited, Osaka, Japan
Filed Oct. 2, 1963, Ser. No. 313,269
Claims priority, application Japan, Oct. 6, 1962, 37/43,877
1 Claim. (Cl. 18—8)

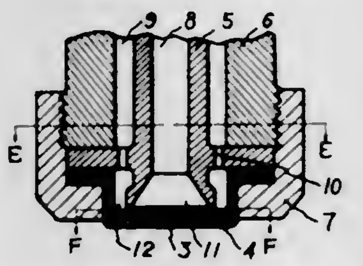

Apparatus is provided for producing filament yarn. In forming the yarn of synthetic fibers a plurality of different fiber-forming polymers are extruded through a plurality of groups of orifices in a common spinneret to form a tow containing a plurality of fibers of different fiber-forming polymers. In one aspect apparatus is provided for producing a tow containing fibers of a first polymer, fibers of a second polymer and bi-component conjugate fibers composed of the first and second fiber-forming polymers.

3,397,427
SEALED VENTED INSERT SPINNERET
James De Jarnette Burke, Jr., Kinston, and Curtis Owen Hawkins, Cove City, N.C., assignors to E. I. du Pont de Nemours and Company, Wilmington, Del., a corporation of Delaware
Filed Sept. 27, 1966, Ser. No. 582,321
5 Claims. (Cl. 18—8)

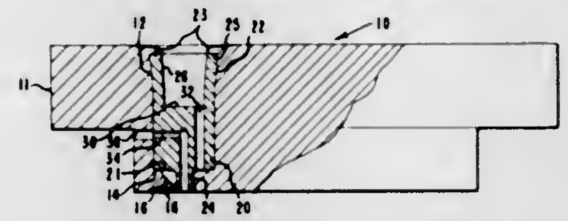

A spinneret for the production of hollow filaments that includes a shaped insert swaged into each passage of the spinneret to effect a seal between the insert and spinneret. The insert has an upper portion through which polymer flows and a vented lower portion around which polymer flows.

3,397,428
APPARATUS FOR THE PREPARATION OF THERMOPLASTIC RESINOUS COMPOSITE ARTICLES
Harold Jack Donald, Midland, Mich., assignor to The Dow Chemical Company, Midland, Mich., a corporation of Delaware
Filed Aug. 14, 1964, Ser. No. 389,732
4 Claims. (Cl. 18—13)

Multilayer film or sheet is prepared by providing a heat plastified stream of at least two components generally concentrically arranged, to a sheeting die having a re-

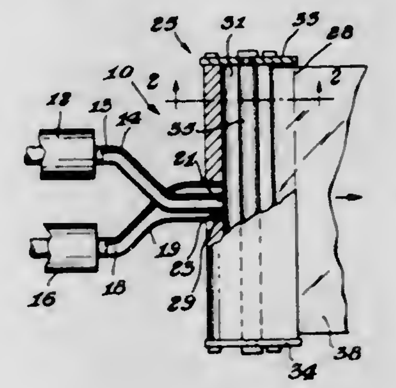

strictor bar supported within the cavity, the bar being generally parallel and spaced from the extrusion slot.

3,397,429
PRESSURE-MOLDING APPARATUS
Arnold L. Zavitz, Upland, and Ramon D. Vanderveer, Pomona, Calif., assignors to General Dynamics Corporation, Pomona, Calif., a corporation of Delaware
Original application May 27, 1965, Ser. No. 459,412, now Patent No. 3,352,953, dated Nov. 14, 1967. Divided and this application May 10, 1967, Ser. No. 649,393
10 Claims. (Cl. 18—17)

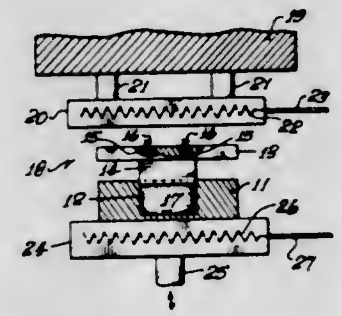

Broadly, the disclosure is directed to a method and apparatus which involves the use of precalibrated compression type springs, the springs being disposed between the movable part of the mold and the pressure applying surface of the apparatus. The force of the apparatus is thus applied to the springs rather than to the mold element directly, and the springs serve to apply force to the mold element for compacting the material therein upon heating of the material, thus enabling close control over mold pressure.

3,397,430
CABLE TIE WITH TWO METALLIC PAWLS
Curtis F. Pearl, Teaneck, N.J., assignor to Electrovert, Inc., Mount Vernon, N.Y.
Filed June 1, 1967, Ser. No. 642,900
10 Claims. (Cl. 24—16)

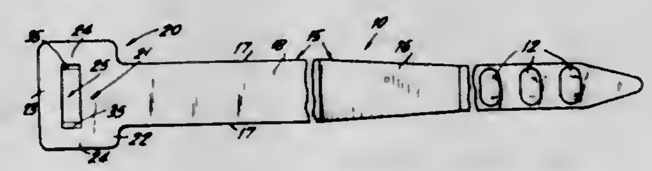

The disclosure is directed to a cable tie for binding plural insulated conductors or the like into a cable. The tie includes a relatively elongated substantially flat flexible

tongue having an open frame integral with one end thereof, the frame and the tongue preferably being formed of a plastic composition material or synthetic resin. The frame has end and side walls defining a substantially rectangular opening to receive the opposite end of the tongue, which latter is inserted through a tongue entry face in the frame and is drawn outwardly through a tongue exit face.

A pair of metallic pawls are provided, each having a fixed end mounted in a respective frame side wall, these pawls having free ends extending inwardly toward each other and converging toward the exit face of the frame. The free ends of the pawls are spaced a substantial distance inwardly of the exit face of the frame. The pawls flex as the cable tie tongue is drawn through the frame, then bite into the side edges of the tongue to prevent retraction of the latter through the frame.

Due to the location of the free ends of the pawls a substantial distance inwardly from the exit face of the frame, the projecting portion of the tongue may be cut off just outwardly of the free ends of the pawls, with the cut end of the cable tie being located completely within the frame.

3,397,431
TUBE CLAMP ASSEMBLY
William R. Walker, Warren, Mich., assignor to Hydro-Craft Inc., Detroit, Mich., a corporation of Michigan
Continuation of application Ser. No. 425,014, Jan. 12, 1965. This application May 12, 1967, Ser. No. 639,591
7 Claims. (Cl. 24—125)

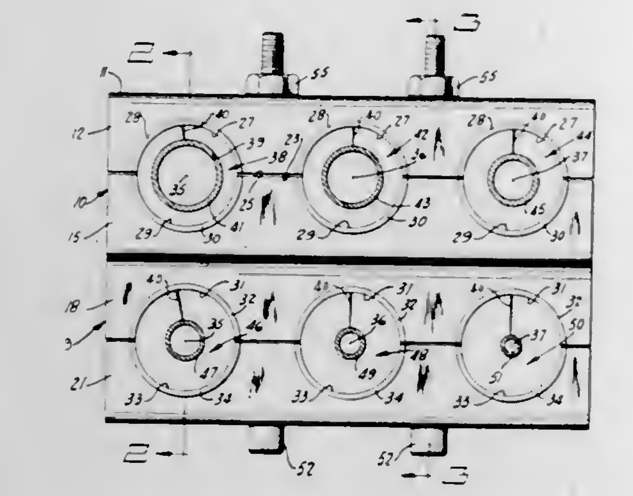

1. In a clamp assembly, the combination comprising:
(a) a pair of aligned U-shaped elongated members disposed with one member inverted and on top of the other;
(b) each of said U-shaped members having a pair of spaced apart side walls;
(c) each of said side walls of each U-shaped member being provided with a plurality of longitudinally spaced apart, semi-circular holes along the free edges thereof;
(d) the semi-circular holes in the one U-shaped member being aligned with the semi-circular holes in the other U-shaped member to form a plurality of pairs of transversely spaced circular holes;
(e) a tubular grommet seated in each of the circular holes and extended transversely of the U-shaped members;
(f) means for securing the clamping members together; and,
(g) each of the semi-circular holes in the U-shaped members having a laterally extending grommet engaging flange thereabout dimensioned so that the ends of the grommets will be compressed thereby against associated tubes when the clamping members are secured together.

3,397,432
LATCH ASSEMBLY
Henry C. Banas, Costa Mesa, Calif., assignor, by mesne assignments, to McDonnell Douglas Corporation, Santa Monica, Calif., a corporation of Maryland
Filed Jan. 6, 1967, Ser. No. 607,823
1 Claim. (Cl. 24—201)

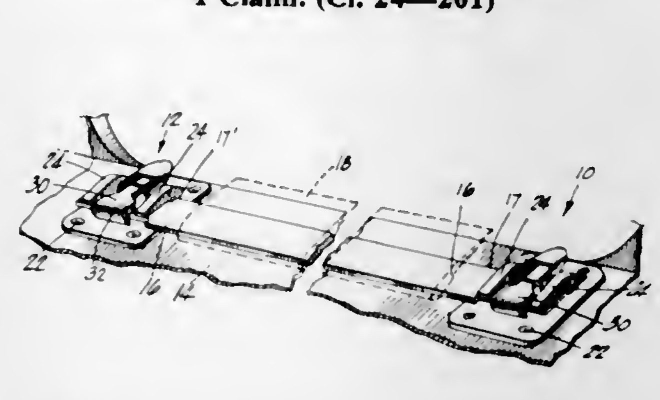

A latching apparatus incorporating two separate and spaced latching assemblies for retaining a latchable member therebetween, wherein each assembly includes a spring-biased arm pivotally mounted between a pair of upstanding members, the spring-biased arms being capable of cooperating to retain the latchable member beneath the upstanding member.

3,397,433
MECHANISM FOR OPERATING AND DISCONNECTING A SHEATHED CABLE
Norris D. Whitehill, Tujunga, Calif., assignor to Walter Kidde & Company, Belleville, N.J., a corporation of New York
Filed Jan. 27, 1967, Ser. No. 612,198
10 Claims. (Cl. 24—230)

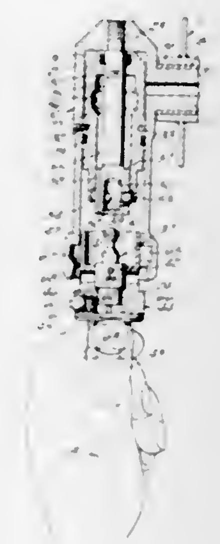

An apparatus to operate and then release a sheathed, tension-actuated cable which is readily and releasably connected to the apparatus where actuation moves a piston through a stroke for first causing elements to grip the cable, then urging the enclosing sheath outwardly to cause tension actuation of the cable and finally releasing both the sheath and the cable from the apparatus.

3,397,434
PATIENT'S FILE CHART CLIP
Dennis Arblaster, 34081 La Serena, Dana Point, Calif. 92629
Filed Mar. 17, 1966, Ser. No. 535,151
4 Claims. (Cl. 24—255)

A clip designed to be clamped to the cover of a file chart and containing a plurality of slots each showing a key word or indicia indicating a step or procedure coverable by a self-contained slidable insert or slider capable of being moved manually back and forth from one position to another to record the completion of the indicated step or procedure, said clip being useful for the purpose

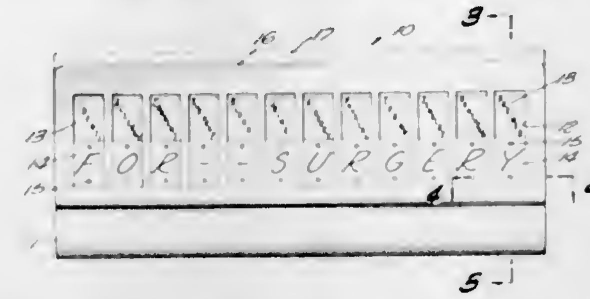

of allowing the user to determine at a glance the status of the project with which the file is concerned, and particularly useful to hospital personnel desiring to rapidly determine whether all essential presurgical procedures have been performed upon a patient.

3,397,435
ATTACHMENT FOR A BRICK PRESS
Anthony C. Jeleslewicz, Conshohocken, Pa., assignor, by mesne assignments, to International Minerals & Chemical Corporation
Filed Oct. 22, 1965, Ser. No. 501,641
10 Claims. (Cl. 25—103)

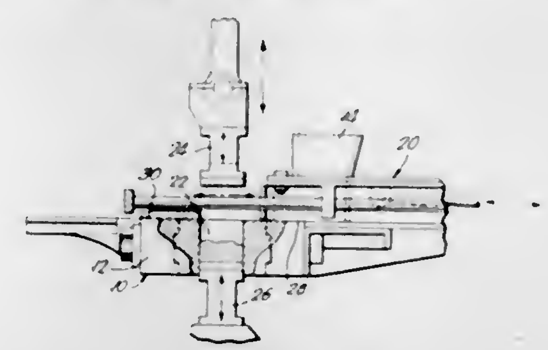

A plane top body is secured to the rearward side of a mold cavity opening in a table over which reciprocates a mix carrying receptacle means having a forward side wall which has a bottom edge recess for discharging into the mold cavity on its return stroke a quantity of mix in excess of that required to fill the mold cavity on the forward stroke. The plane top body is so positioned on the table that it passes into and through the recess after the forward side wall of the receptacle passes the mold cavity on its forward stroke and supports the mix above the table top surface and in the plane of the top of the excess of mix deposited on the reverse stroke.

3,397,436
NEEDLE BOARD FOR NEEDLE FELTING MACHINES
Josef Zocher, Birkesdorf, Duren, Germany, assignor to The Singer Company, New York, N.Y., a corporation of New Jersey
Filed Jan. 30, 1967, Ser. No. 612,405
20 Claims. (Cl. 28—4)

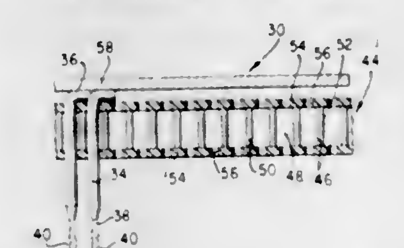

This disclosure relates to a felting machine. More particularly, this disclosure relates to an improved needle board for a felting machine in which the felting needles are secured to a resilient plate contiguous with a rigid frame. The frame has apertures formed therein into which the felting needles extend.

3,397,437
METHOD AND APPARATUS FOR CONVEYING YARN
William A. McNeill, Gastonia, and Joseph A. Davant, Jr., Charlotte, N.C., assignors to McNeill Spinning Company, Inc., Gastonia, N.C., a corporation of North Carolina
Filed Nov. 8, 1966, Ser. No. 592,791
11 Claims. (Cl. 28—21)

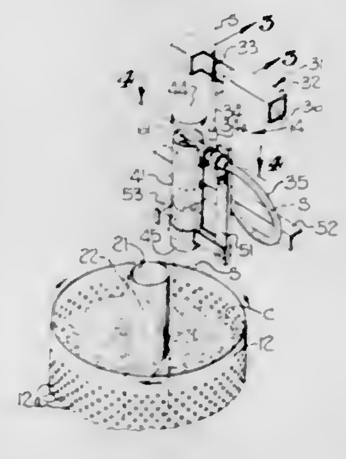

Method and apparatus for collecting yarn in package form which permits free shrinkage of the yarn during subsequent treatment, wherein the yarn is conveyed from a yarn source in a stream of fluid, the stream being directed downwardly in a substantially helical path to impart a helical movement to the yarn, the stream being substantially dissipated while permitting the yarn to pass downwardly under the influence of gravity, and the downwardly moving yarn being collected in a series of layers of random loops to form a yarn package.

3,397,438
CONTROL SYSTEM FOR METALLIC STRIP GATHERING APPARATUS
Richard A. Montoro, Williamsville, N.Y., assignor to Westinghouse Electric Corporation, Pittsburgh, Pa., a corporation of Pennsylvania
Filed Feb. 11, 1966, Ser. No. 526,812
9 Claims. (Cl. 29—18)

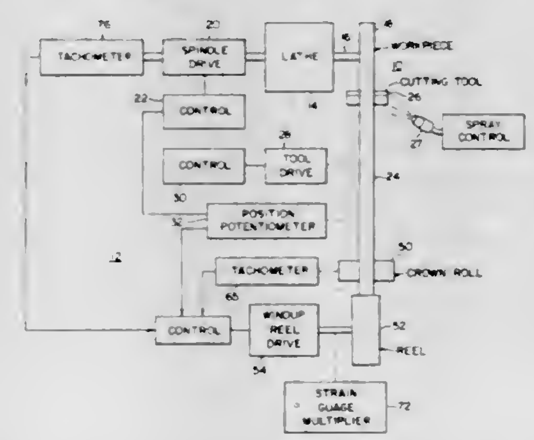

A cutting tool is fed against the edge of a rotated metallic disc-like workpiece to produce strip which is wound under tension on a driven reel. The strip is formed by a physical process known as gathering which tends to cause strip gauge variation as certain system parameters vary during the strip forming operation. A control system responds to predetermined sensed variables and controls the reel drive to produce a constant gather ratio of strip speed to surface cutting speed and constant strip gauge.

3,397,439
TEXTILE GUIDE ROLL
Heinz Hanau, Los Angeles, Calif., assignor to Industrial Tectonics, Inc., Ann Arbor, Mich., a corporation of Michigan
Filed Nov. 15, 1966, Ser. No. 594,532
3 Claims. (Cl. 29—116)

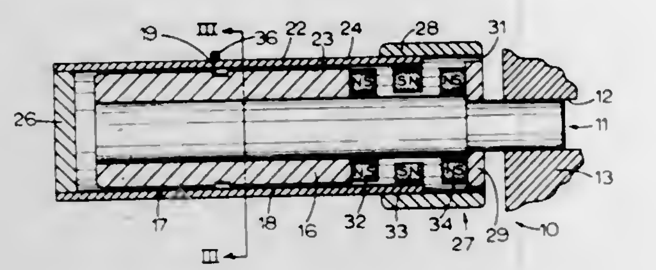

A textile guide roll having a tubular member which is spaced radially outwardly from a shaft and an air bearing. The tubular member is rotatable with respect to the shaft. The guide roll has a magnetic thrust bearing at at least one end thereof.

3,397,440
METHOD OF MAKING HEAT EXCHANGER HAVING EXTENDED SURFACE
David Dalin, Vensberg, Tosse, Sweden
Filed Sept. 30, 1965, Ser. No. 496,235
5 Claims. (Cl. 29—157.3)

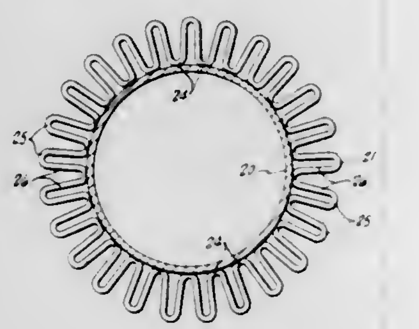

A metal wall separating two fluid media has zig-zag bimetallic strips welded to one side thereof to provide extended surface fingers which project perpendicularly from the wall. The bimetallic strips have a core of good heat conductivity metal (copper or aluminum) encased in a sheath of metal possessing good resistance to corrosion (stainless steel). As the bimetallic strips are welded to the wall, sufficient pressure is applied to the portion of the strip being welded to the wall to compact and densify the metal of the core and thereby preclude the formation of voids in the core metal as the weld freezes. In some of the embodiments of the invention illustrated, the bimetallic strips are in the form of combs, in which case it is the backs of the combs that are welded to the wall.

3,397,441
METHOD OF MAKING AN ORNAMENTAL FACEPLATE
Anthony J. Rich, Villa Park, Ill., assignor to Rich Engineering Inc., Franklin Park, Ill., a corporation of Illinois
Filed Apr. 26, 1965, Ser. No. 450,858
3 Claims. (Cl. 29—160)

A method of making an ornamental faceplate for electrical apparatus having a speaker unit which involves extruding a plate having an imperforate central portion from the front side of which extend inclined parallel flat faced ribs, applying paint to the entire surface area of the front side of the plate containing the ribs, wiping the paint off

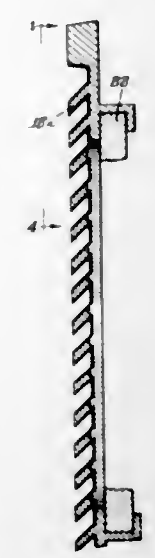

the flat faces of the ribs, and cutting an opening in the faceplate from the rear thereof.

3,397,442
COAXIAL CABLE FORMING APPARATUS
Thomas J. McGean, East Orange, N.J., assignor to Bell Telephone Laboratories, Incorporated, New York, N.Y., a corporation of New York
Filed Nov. 12, 1965, Ser. No. 507,330
9 Claims. (Cl. 29—202.5)

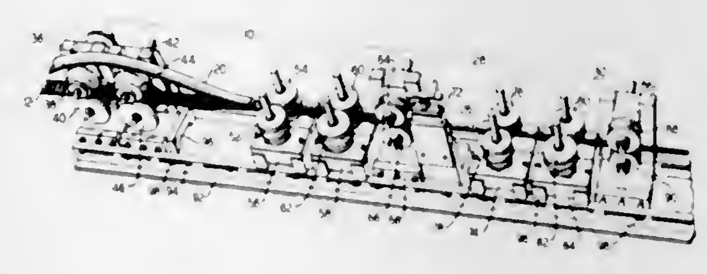

A transversely corrugated ribbon is shaped into a tube by passing it between two radially adjacent rolls, one of whose peripheral edges has a concave profile and the other a convex profile, to bend the ribbon transversely. The edges of succeeding pairs of radially adjacent rolls continue curving the ribbon transversely about a spacer-carrying center conductor until the ribbon surrounds the center conductor. The profile radius in the edges of each of the successively arranged pairs is inversely proportional to the sequential position of the pair.

3,397,443
METHOD FOR THE MANUFACTURE OF CYLINDRICAL CONTAINERS PARTICULARLY SO-CALLED CISTERNS
Johan Ingvar Johansson, Avesta, Sweden, assignor to Avesta Jernverks Aktiebolag, Avesta, Sweden, a corporation of Sweden
Filed Sept. 2, 1965, Ser. No. 484,583
Claims priority, application Sweden, Sept. 3, 1964, 10,572/64
4 Claims. (Cl. 29—421)

The present invention pertains to a method for the manufacture of upright cyclindrical containers, particularly cisterns, which comprises making the bottom of the container from essentially flat plates of austenitic stainless steel and joining them together by welding, then welding a stiffening means to the bottom adjacent the

periphery of the bottom, whereby increased resistance to inwardly directed radial forces is achieved, and subject-

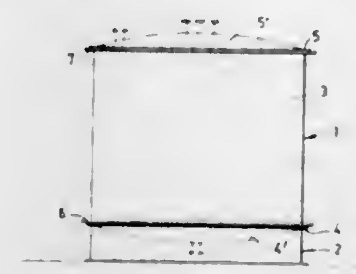

ing the welded assembly to the influence of an internal fluid pressure of such a magnitude that the bottom is cold-stretched to a permanent cupped shape.

3,397,444
BONDING METALS WITH EXPLOSIVES
Oswald R. Bergmann, Cherry Hill Township, George R. Cowan, Woodbury, and Arnold H. Holtzman, Cherry Hill Township, N.J., assignors to E. I. du Pont de Nemours and Company, Wilmington, Del., a corporation of Delaware
Filed Oct. 23, 1965, Ser. No. 503,261
12 Claims. (Cl. 29—470.1)

Metals are explosion bonded by being driven together progressively with an explosive at a low collision velocity at which bonded products having relatively little melt and improved physical properties are obtained.

3,397,445
METHOD OF MAKING BIMETAL TUBING
William L. Ulmer, 2480 Kenilworth Road, Cleveland, Ohio 44106, and Harry W. McQuaid, Cleveland, Ohio; said McQuaid assignor to said Ulmer
Filed Sept. 30, 1965, Ser. No. 491,590
3 Claims. (Cl. 29—474.4)

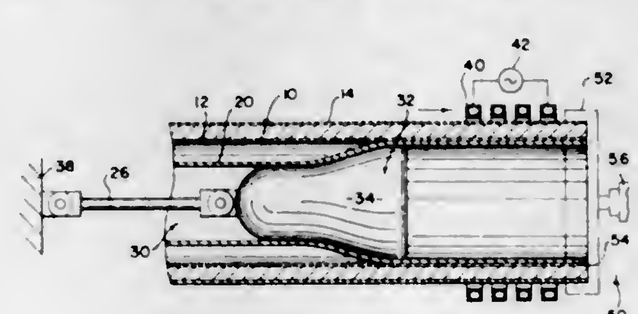

There is provided a method of joining a copper base layer onto a ferrous base member wherein zinc is first alloyed to the ferrous member and then the copper base layer is applied. Thereafter, pressure is applied between the layer and the member while the member is progressively heated to a temperature in the general range of 1700° F.–1900° F.

3,397,446
THIN FILM CAPACITORS EMPLOYING SEMICONDUCTIVE OXIDE ELECTROLYTES
Donald Jex Sharp, Princeton, N.J., assignor to Western Electric Company, Incorporated, New York, N.Y., a corporation of New York
Filed July 9, 1965, Ser. No. 470,762
9 Claims. (Cl. 29—570)

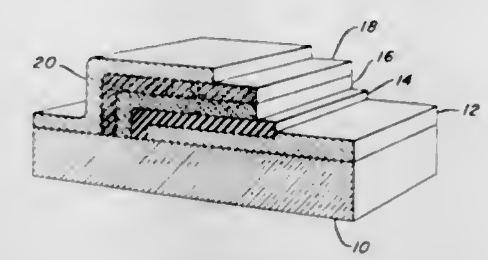

A stable and high oxidation state oxide of manganese (MnO_2) is deposited on an anodically produced dielectric oxide layer (Ta_2O_5) which in turn resides on a first capacitor electrode layer (Ta) by first immersing the oxide layer in a dilute solution of potassium permanganate at room temperature. The solution is acidified by the addition of an oxidizing acid having the formula HNO_x, where x is either 2 or 3, to reduce and precipitate the MnO_2 onto the oxide layer. The solution may be agitated during precipitation.

Lastly, a graphite layer and a counter-electrode may be added to produce a self-healing, low noise, low dissipation factor, low leakage current, high capacitance capacitor.

3,397,447
METHOD OF MAKING SEMICONDUCTOR CIRCUITS
Cedric G. Currin, Midland, Mich., and John S. Hood, Pittsburgh, Pa., assignors to Dow Corning Corporation, Midland, Mich., a corporation of Michigan
Filed Oct. 22, 1964, Ser. No. 405,746
4 Claims. (Cl. 29—577)

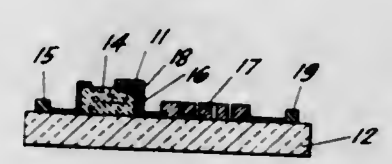

Integrated semiconductor circuit produced by applying a layer of refractory material, such as silicon carbide, to a thin semiconductor crystal. Areas of the semiconductor crystal are formed into electronic devices and the remaining areas removed leaving the refractory material as a mechanical substrate and electrical isolation material for the circuit. Electrical connections and thin film passive devices may be applied as desired and upon completion an insulating layer may be applied over the entire device.

3,397,448
SEMICONDUCTOR INTEGRATED CIRCUITS AND METHOD OF MAKING SAME
Thomas N. Tucker, Freeland, Mich., assignor to Dow Corning Corporation, Midland, Mich., a corporation of Michigan
Filed Mar. 26, 1965, Ser. No. 443,046
4 Claims. (Cl. 29—577)

Method of making semiconductor integrated circuits by forming monocrystalline silicon islands in a substrate of high density homogeneous silicon carbide is disclosed. The hardness of silicon carbide enables the circuits to be

compactly and economically made and easily lapped or etched, while its good thermal conductivity and electrical insulation properties enable the circuit to rapidly dis-

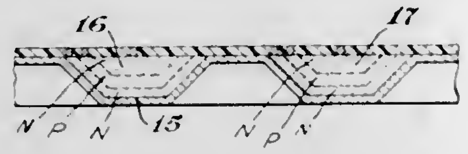

sipate the heat generated by the active elements of the circuit when they are in use and provide electrical isolation between adjacent silicon islands.

3,397,449
MAKING P-N JUNCTION UNDER GLASS
Dietrich A. Jenny, Santa Ana, Calif., assignor to Hughes Aircraft Company, Culver City, Calif., a corporation of Delaware
Filed July 14, 1965, Ser. No. 471,950
12 Claims. (Cl. 29—578)

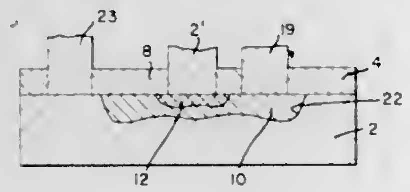

Method of making a planar transistor in which a semiconductor body is provided with a layer of glass or oxide through which a central hole and an annular opening concentric therewith are made, thereafter diffusing a conductivity-type-determining impurity simultaneously through the central hole and the annular opening to form a base region, and then closing the annular opening and diffusing a conductivity-type-determining impurity through the central hole to form an emitter region in the previously formed base region.

3,397,450
METHOD OF FORMING A METAL RECTIFYING CONTACT TO SEMICONDUCTOR MATERIAL BY DISPLACEMENT PLATING
Charles A. Bittmann, Los Altos, and Chih-Tang Sah, Mountain View, Calif., assignors to Fairchild Camera and Instrument Corporation, Syosset, N.Y., a corporation of Delaware
Original application Jan. 31, 1964, Ser. No. 341,717. Divided and this application May 26, 1966, Ser. No. 570,101
3 Claims. (Cl. 29—578)

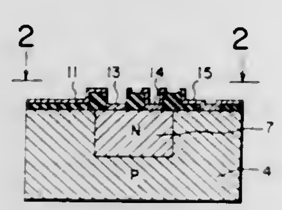

A method of forming a metal rectifying contact to a semiconductor material by exposing the surface of the semiconductor material through an oxide mask to an etching solution to which the mask is resistant. The solution contains ions of the metal to be used for contact. The etching solution removes the oxides from the unmasked portion of the surface and the metal ions therein replace some of the semiconductor material exposed by the removed oxide, thereby leaving a deposit of metal on the exposed semiconductor material to form a rectifying contact.

3,397,451
SEQUENTIAL WIRE AND ARTICLE-BONDING METHODS
Michael K. Avedissian, Mohnton, and Joseph S. Manowczak, Reading, Pa., assignors to Western Electric Company, Incorporated, New York, N.Y., a corporation of New York
Filed Apr. 6, 1966, Ser. No. 540,736
6 Claims. (Cl. 29—589)

4. In the manufacture of electrical devices of a type wherein at least one metallized wafer is bonded to a header and at least one metallic lead wire is bonded between a portion of the wafer and a terminal post on the header, an improved method of making the wire and wafer bonds and of assembling the parts comprising:
(a) thermally bonding an end of the wire to one surface of a wafer with a heated bonding needle having an opening through which the end of the wire protrudes, so as to form a first wire bond of sufficient strength that the wire can support the weight of the wafer;
(b) moving the needle to transport the wafer to a position facing the header and to place the wafer against the header in the desired bonding position;
(c) bonding the wafer to the header;
(d) moving the needle to a position opposite to the post to advance a length of wire through the needle;
(e) thermally bonding a portion of the wire to the post with the needle to form a second wire bond; and then
(f) breaking the wire adjacent to the post so as to leave the length of wire connecting the wafer to the post.

3,397,452
PRINTED CIRCUIT MANUFACTURING METHOD
Bernard Marc Taraud, Vanves, Hauts-de-Seine, France, assignor to Société d'Electronique et d'Automatisme, Courbevoie, Hauts-de-Seine, France
Continuation of application Ser. No. 49,215, Aug. 12, 1960. This application Sept. 9, 1966, Ser. No. 578,412
Claims priority, application France, Feb. 9, 1960, 818,137, Patent 1,256,632
4 Claims. (Cl. 29—625)

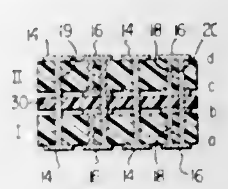

This invention relates to the method of interconnecting interior circuit conductors of multilayer circuit panels by forming isolated terminal areas on the face of each of the circuit panel, forming holes through the terminal areas and the interior conductors and then metallizing the holes. The panels are then secured together. Additional holes are formed by the terminal areas and metallized to interconnect the same.

3,397,453
METHOD OF FORMING COMPOSITE ELECTRICAL CONTACTS
Childress B. Gwyn, Jr., Export, Pa., assignor to Talon, Inc., Meadville, Pa., a corporation of Pennsylvania
Filed Aug. 12, 1965, Ser. No. 479,071
4 Claims. (Cl. 29—630)

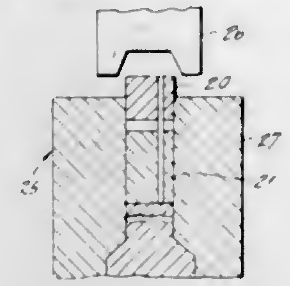

1. A method of forming composite electrical contact elements from continuous lengths of metal wires, each said element incorporating a contact working face portion and integral therewith, a contact body portion, said contact body portions and said contact working face portions being formed respectively, from wires of different metallic compositions, which comprises shearing each said wire into a plurality of segments for forming said contact working face and contact body portions, respectively, aligning said contact working face and contact body portion segments in alternating sequential end-to-end confronting relation, fastening together in closely spaced relation adjacent segments of said aligned contact working face and contact body portions, separating pairs of said segments for forming each said composite element, subjecting each said pair of segments to an axial compressive force to effect intermolecular bonding and welding of said segments and thereby form the composite contact element.

3,397,454
METHOD AND APPARATUS FOR FORMING COMPOSITE ELECTRICAL CONTACTS
Childress B. Gwyn, Jr., Export, Pa., assignor to Talon, Inc., Meadville, Pa., a corporation of Pennsylvania
Filed Aug. 25, 1965, Ser. No. 482,363
8 Claims. (Cl. 29—630)

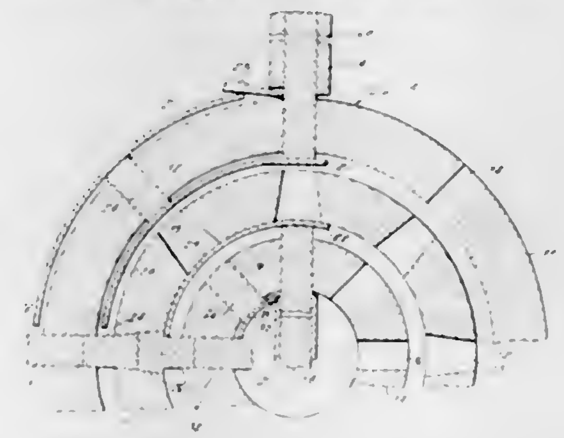

A method for forming composite electrical contacts is disclosed wherein continuous lengths of metal wires are fed into recesses in a series of rotatable concentric rings constituting a turntable. After the wires are inserted in the recesses they are sheared as a result of the rotation of the rings. Subsequently, axial pressure is applied to the wires to cause their abutment and expansion thereby producing bonding between the wires.

3,397,455
CITRUS FRUIT PEELER
William Egge, Box 27, Heron Lake, Minn. 56137
Filed Oct. 24, 1966, Ser. No. 589,093
7 Claims. (Cl. 30—24)

This invention relates to a device for peeling citrus fruits which provides a first cutting section providing a cutting element therein which section is arcuately shaped to provide a guiding surface for contacting the skin of the fruit while the cutting element is actually penetrating and cutting the skin of the fruit and a second skin removing element arranged in spaced relation to the cut-

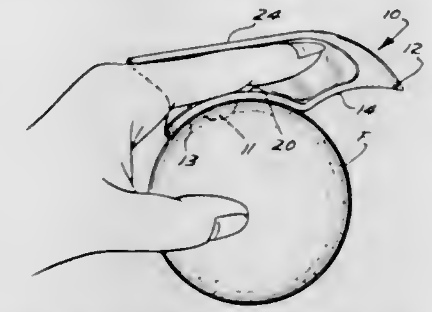

ting section which provides a second arcuate portion designed to guard against the surface of the fruit itself with a tapered end on one end thereof, which end is inserted between the fruit and the inner side of the skin such that as the fruit is rotated therepast the tapered end will serve to force the skin from the fruit.

3,397,456
ELECTRIC SHAVER WITH OSCILLATING OUTPUT SHAFT DRIVEN BY RECIPROCATING MOTOR
Louis A. Barnas, Jr., Cary, and Sophocles J. Dokos and William A. Patzer, Chicago, Ill., assignors to Sunbeam Corporation, Chicago, Ill., a corporation of Illinois
Filed May 27, 1966, Ser. No. 553,554
4 Claims. (Cl. 30—43.9)

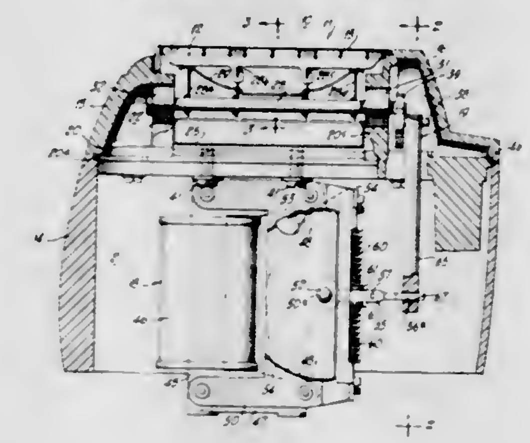

Electric shaver of the type having an oscillating shaft for actuating relatively movable cutting members wherein an electric motor having an armature which moves back and forth is employed and wherein a connecting rod interconnects the armature, which has an output movement substantially reciprocal in nature, with a crank pin eccentrically mounted relative to said oscillating shaft.

3,397,457
DENTAL DRILL
Norman R. Gosselin, Marblehead, Mass., assignor to Iota-Cam Corporation, Wakefield, Mass., a corporation of Massachusetts
Filed Jan. 22, 1965, Ser. No. 427,385
9 Claims. (Cl. 32—27)

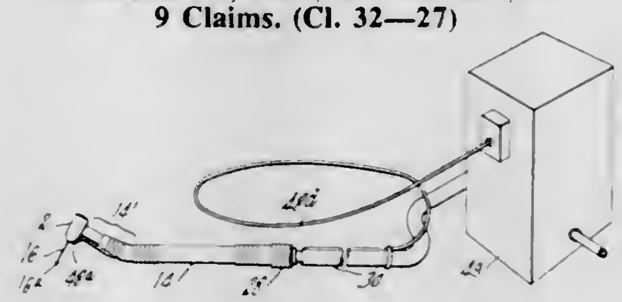

Fiber optic light beam in combination with a dental drill in a manner that does not interfere with the dentist's technique or operation of the drill. A connector that auto-

matically completes the light path with connection of the drill to its power supply, a method for modifying existing drills and a special member that relates the distal portion of the fibers to the drill body are disclosed.

3,397,458
GUIDE LINE SUPPORTING APPARATUS
Dale L. Wicklund, Rte. 2, Box 157A, Deer River, Minn. 56636
Filed Sept. 7, 1967, Ser. No. 666,134
3 Claims. (Cl. 33—86)

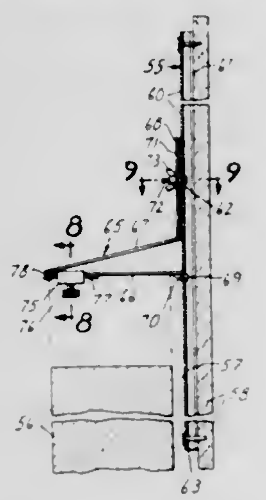

An elongated rigid spacing member fixedly attached in a vertical position having a member extending outwardly generally perpendicular to the longitudinal axis thereof adjacent the guide line for masonry construction and the like. The outwardly extending member has means thereon for engaging the guide line and maintaining it horizontal.

3,397,459
GEARWHEEL TESTING RECORDER
Joachim Ehrhardt, Erasmus Hultzsch, Bernhard Meier, and Franz Söldner, Jena, Germany, assignors to VEB Carl Zeiss Jena, Jena, Germany
Filed Jan. 20, 1967, Ser. No. 611,222
1 Claim. (Cl. 33—179.5)

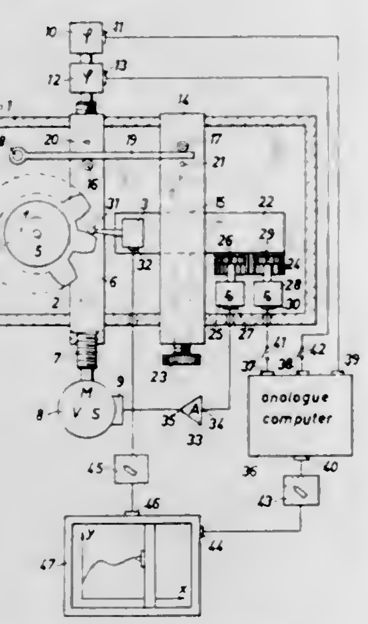

This invention relates to gearwheel testing machines which record deviations of tooth profiles from their nominal involute shape and wherein the gearwheel to be tested is coaxial with and keyed to a cylinder in rolling contact with a rule. The rule by means of a lever imparts to a tangential slide a motion proportional to the rolling-path length of this rule. Displaceable along and lockable to the tangential slide is a radial slide carrying a gauge head which supplies the test data to be recorded.

3,397,460
HEAT EXCHANGE SYSTEM FOR CALCINER
Richard Terry Hall, Toronto, Ontario, Canada, assignor to International Processes Limited
Filed Oct. 12, 1965, Ser. No. 495,132
16 Claims. (Cl. 34—20)

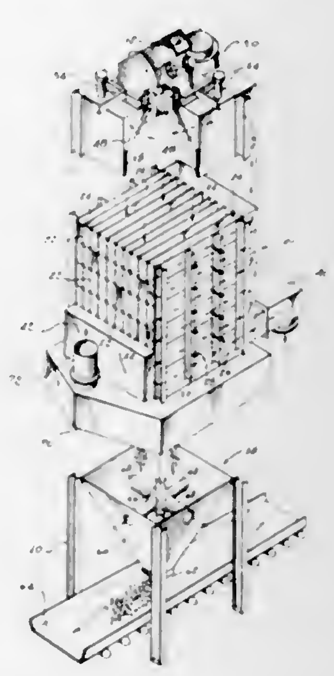

A heat exchange system for a calciner in which hot lime to be cooled first moves by gravity through passages formed by aligned ducts of tiers of ducts of an indirect heat exchanger having means for passing cooling air through the ducts to provide clean exhaust air and then the lime passes through a direct heat exchanger including an inverted pyramidal chamber and a central erect pyramidal baffle with cooling air being supplied through a conduit passing through the chamber wall and through the baffle to the interior thereof. The clean exhaust air discharged from the indirect heat exchanger is conducted to a kiln to supply air for preheating the charge fed thereto while the exhaust air discharged from the direct heat exchanger passes to a dust collector.

3,397,461
CLOTHES DRYER WITH PLURAL FUNCTION CONTROLLER OPERATED BY SINGLE CONTROL DIAL
Thomas H. Fogt, West Carrollton, and Mark N. Scherzinger, Dayton, Ohio, assignors to General Motors Corporation, Detroit, Mich., a corporation of Delaware
Filed Oct. 5, 1966, Ser. No. 584,405
11 Claims. (Cl. 34—45)

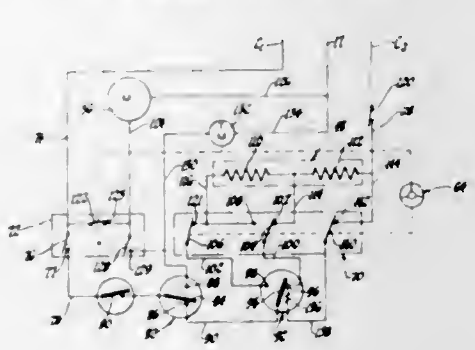

In preferred form, a clothes dryer including a motor driven rotatable drum having a heated air stream directed therethrough with an exhaust stream temperature sensed by plural thermostats. One of the thermostats cycling heating means and timer means on and off. Another of the thermostats and a timer switch turning off the heating means at a predetermined sensed exhaust temperature. A single control knob programs timer switches and a heating level switch to obtain separate and distinct automatic, damp dry and no heat cycles of dryer operation.

3,397,462
APPARATUS FOR LYOPHILIZATION OF SUBSTANCES CONTAINING AN AQUEOUS PHASE
Maria Sonia Martinis Marchi Jellicich, Milan, Italy, assignor to Edwards High Vacuum International Ltd., Crawley, Sussex, England, a company of the United Kingdom
Filed Feb. 16, 1966, Ser. No. 527,659
Claims priority, application Italy, Feb. 20, 1965, 746,655
8 Claims. (Cl. 34—92)

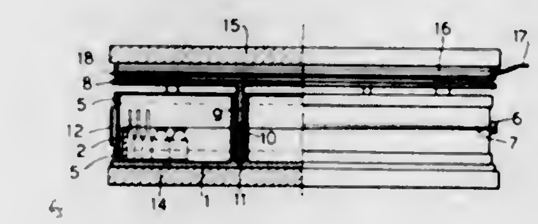

1. An apparatus for use in lyophilization of a substance containing an aqueous phase comprising in combination a baseplate, a frame and a lid, guide means for assembling said frame on said plate and said lid on said frame, means for insuring a tight seal in said assemblage, and means for permitting entry of gas into said sealed assemblage, said gas entry means being controlled from outside of said assemblage.

3,397,463
HAIR DRYERS
Nikolaus Laing, 35 Hofener Weg, 7141 Aldingen, near Stuttgart, Germany
Continuation-in-part of application Ser. No. 221,621, Sept. 5, 1962, which is a continuation-in-part of application Ser. No. 671,114, July 5, 1957, now abandoned. This application Jan. 3, 1966, Ser. No. 518,243
3 Claims. (Cl. 34—97)

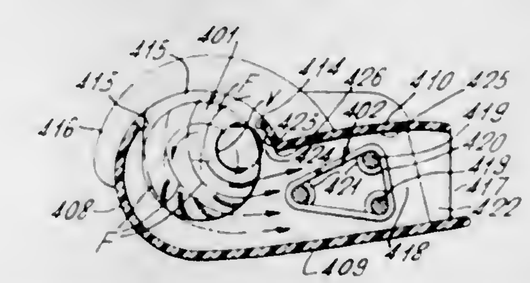

A portable hand-held hair dryer having a casing with a long rectangular outlet, a cross-flow type blower in the casing at an end opposite the outlet and extending parallel to the outlet, and electric heater means in the casing positioned between the cross-flow blower and outlet.

3,397,464
HAIR DRYER
Russell E. Petrick, Park Ridge, Ill., assignor to Bretford Manufacturing, Inc., a corporation of Illinois
Filed Dec. 16, 1965, Ser. No. 514,246
5 Claims. (Cl. 34—99)

An improvement in so-called table model hair dryers wherein the supporting base is provided with a plurality of cosmetic receiving compartments and wherein a bonnet of the type having a series of alternately inwardly and outwardly directed annular frusto-conical sections is provided with a reinforcing member on the interior thereof for mounting a supporting bracket on the bonnet. Also, the telescoping, supporting standard for the bonnet is

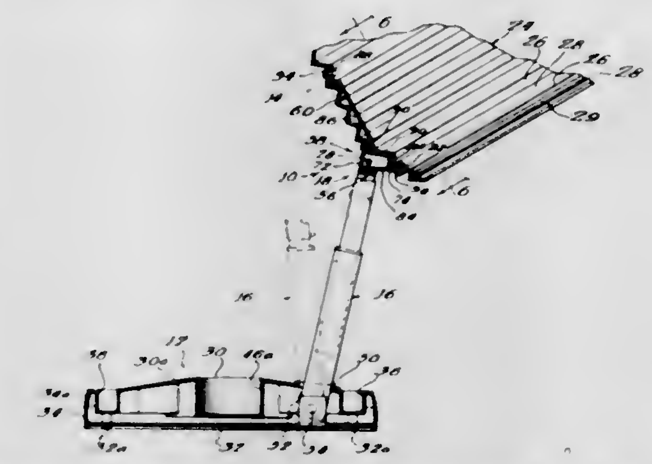

pivoted to the base for movement between a storage position and a bonnet supporting position.

3,397,465
HEAT SHRINKING APPARATUS
Keith S. Carmichael, Wilmington, Del., assignor to E. I. du Pont de Nemours and Company, Wilmington, Del., a corporation of Delaware
Filed Aug. 10, 1966, Ser. No. 571,578
7 Claims. (Cl. 34—225)

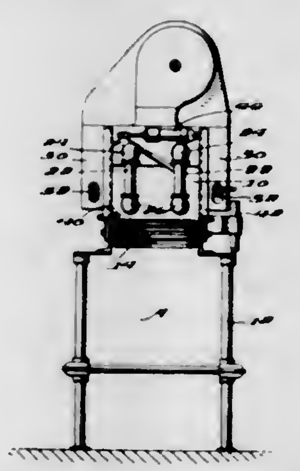

Apparatus for directing heated air at substantially only the protruding areas of a sleeve of film overwrap to selectively preshrink these areas without adversely affecting the main body of the film overwrap.

3,397,466
APPARATUS FOR TEACHING KNOWLEDGE
Gerald Barry Stillit, 15 Hill View, Primrose Hill Road, London NW. 3, England
Filed May 12, 1966, Ser. No. 549,550
Claims priority, application Great Britain, May 19, 1965, 21,250/65
3 Claims. (Cl. 35—9)

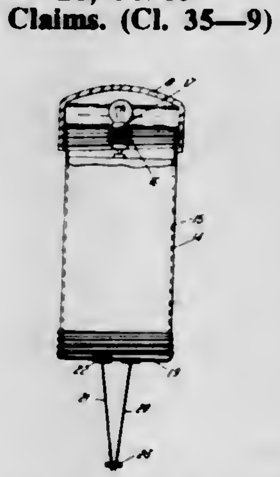

A spaced pair of contacts of an indicating device are adapted to be electrically connected if placed within that

demarked area of a multiple choice question sheet which corresponds to the correct answer for the question.

3,397,467
AUDIO-VISUAL AUTODIDACTIC DEVICE
Robert I. Genin, Scarsdale, N.Y., and Joseph Wapner, Levittown, Pa., assignors, by mesne assignments, to Amram et Fils S.A.R.L., a corporation of France
Filed Dec. 14, 1966, Ser. No. 601,645
9 Claims. (Cl. 35—35)

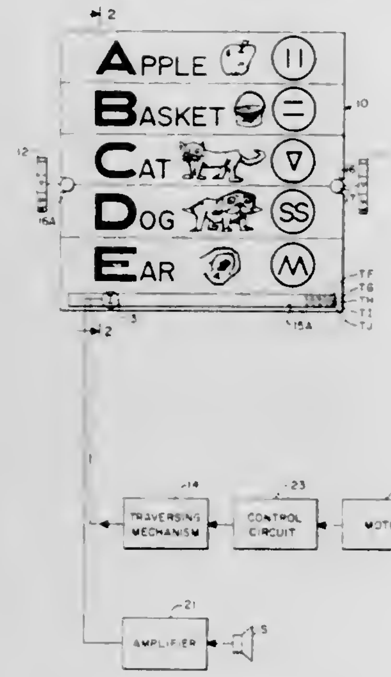

1. An audio-visual autodidactic system comprising:
(A) a card having a series of visual items printed on one face thereof, and a strip of magnetic tape secured to the opposing face thereof, said tape having a like series of pre-recorded tracks each related to a respective item, and
(B) a playback assembly including:
(a) a deck for supporting said card,
(b) a playback head movable under said deck across said tape,
(c) manually-operated means engaging said card to advance same with respect to said head to bring said head into operative relation with a selected track on said tape, and
(d) electronic means coupled to said head to reproduce the play-back track.

3,397,468
VISUAL AID TEACHING DEVICE
Lawrence R. Cole, 315 Beattie Ave., Lockport, N.Y. 14094
Filed July 26, 1966, Ser. No. 567,928
10 Claims. (Cl. 35—63)

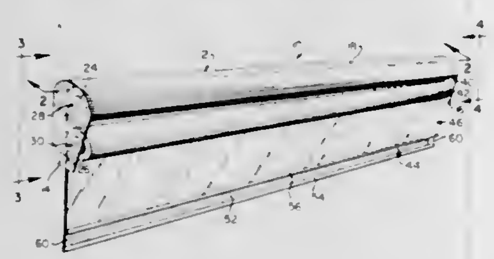

1. A visual teaching device comprising spaced bracket means adapted to be secured to a support such as a structural wall, a pair of rollers rotatably mounted in said bracket means in laterally spaced substantially parallel relation, a flexible translucent impression sheet wound upon one of said rollers, a flexible opaque backing sheet wound upon the other of said rollers, each of said sheets having a free end and being unwindable by said free end from its roller to an extended position substantially parallel and adjacent to the other of said sheets, and said backing sheet having a pressure sensitive but non-removable, adhesive surface facing said impression sheet in said position, and to which adhesive surface the adjacent surface of said impression sheet can be removably adhered by pressure selectively applied against the opposite surface of said impression sheet, such as by a stylus, to form indicia visible through the adhered portions of said impression sheet, and which indicia can be erased by stripping said impression sheet from said backing sheet.

3,397,469
SCRAPING BLADE ATTACHMENT FOR A RAKE
Espey T. Browning, 5700 Nicholson St., Riverdale, Md. 20840
Filed Feb. 15, 1966, Ser. No. 527,552
8 Claims. (Cl. 37—53)

A scraper blade attachment for a conventional hand garden rake, said rake having a handle with a bar mounted at one end and with a row of tines carried by the bar and projecting outwardly thereof, and said blade being of greater width than the length of the tines and with a portion of said blade being of such dimension as to project considerably beyond the outer free ends of the row of tines, and a unique manner of removably and replaceably attaching the blade to the tines.

3,397,470
EXCAVATOR
Raymond A. Hanson, ℅ R. A. Hanson Company, Palouse, Wash. 99161
Filed Oct. 8, 1965, Ser. No. 494,092
3 Claims. (Cl. 37—108)

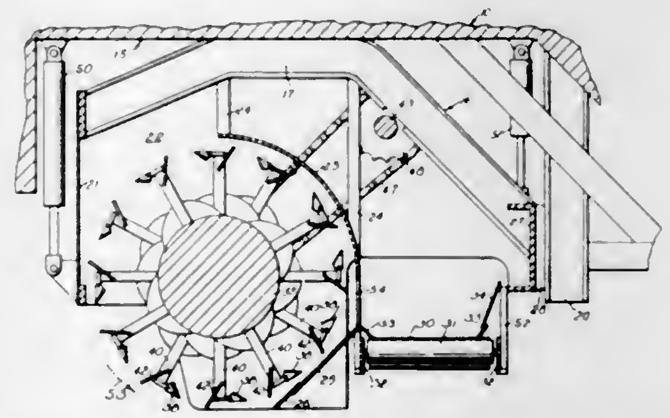

An excavator for cutting soil materials to a sub-grade elevation. The apparatus involves the use of a mobile supporting framework and elevationally adjustable frame on which is mounted a transverse rotational shaft. The shaft is equipped with projecting cutting teeth and distributing auger blades, which cooperate to loosen and convey excess material toward the transverse center of the shaft. The frame further carries a trimming blade immediately rearward of the teeth and an enclosure or shield rearward of the teeth. The transverse center portion of the shaft is further provided with paddles which direct loosened material through an aperture in the enclosure to a receiving conveyor rearward thereof.

3,397,471
SUPPORT FOR EJECTOR CYLINDER
William P. Wohlford, Springfield, Ill., and Lester W. Taylor, Cedar Rapids, Iowa, assignors to Allis-Chalmers Manufacturing Company, Milwaukee, Wis.
Filed Sept. 28, 1965, Ser. No. 490,877
17 Claims. (Cl. 37—129)

A torsion bar suspension is provided for the open end of a scraper ejecter cylinder to carry the weight thereof, thereby preventing damage and excessive wear of the rod gland and packing due to radial load thereon. The torsion bar suspension is vertically adjustable to compensate for manufacturing deviations and to facilitate assembly and disassembly.

3,397,472
FOLDING IRONING BOARD AND CABINET
Doris H. Topliffe, 1710 Brookside Terrace, Tacoma, Wash. 98465
Filed Nov. 23, 1965, Ser. No. 509,292
6 Claims. (Cl. 38—104)

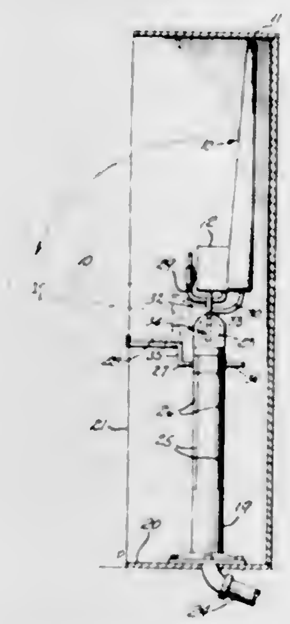

An ironing board assembly, inclusive of a storage cabinet and a steam generating unit, is mounted for standing or sitting height utilization and for vertical storage within the cabinet. Pivoting from a vertical to a horizontal position is possible as the board is ball mounted on a spring biased collar support while it is confined within a hollow capped column. Lowering of the board while in its horizontal position occurs as its ball and collar support is lowered against the force of a spring within the column. The board is held in one of several locations along this capped column where arms on the collar are rotated into notches offset from opposite continuous vertical slots formed in the hollow capped column. Conduits, some rigid, some flexible, serve when rigid as supports of the board and steam equipment in its attachment to the mounting ball as well as carrying steam and water, and when flexible, as connecting drain lines extending from the rotatable ball mounting of the steaming ironing board and beyond down through the capped hollow column to a rigid permanent dwelling drain line.

3,397,473
CARTRIDGE EXTRACTOR AND EXTRACTOR SPRING THEREFOR
Bruce W. Browning, Ogden, Utah, assignor to Browning Industries, Incorporated, Morgan, Utah, a corporation of Utah
Original application Jan. 3, 1967, Ser. No. 606,846, now Patent No. 3,368,298, dated Feb. 13, 1968. Divided and this application Dec. 26, 1967, Ser. No. 693,600
5 Claims. (Cl. 42—25)

This invention provides an extractor and extractor spring combination. The extractor spring has an annular portion snapped in a peripheral groove in the breech bolt and an elongated portion resiliently retaining the extractor for radial, slidable displacement relative to the head of the breech bolt.

3,397,474
TRIGGER, SEAR, SAFETY ASSEMBLY
Joseph A. Badali, Branford, Conn., assignor to Olin Mathieson Chemical Corporation, a corporation of Virginia
Filed June 14, 1967, Ser. No. 646,094
3 Claims. (Cl. 42—70)

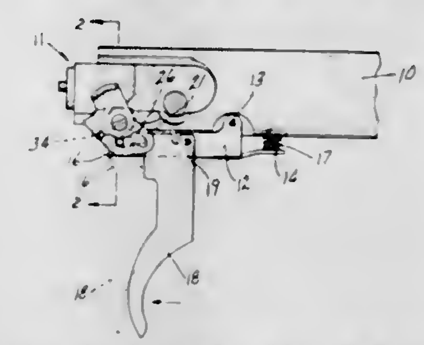

The invention is a trigger, sear, and safety assembly for a firearm wherein the trigger is pivoted to a sear which is pivoted to the receiver, and the sear safety comprises a safety lever having an L-shaped slot, the lever being pivotally mounted upon the receiver.

3,397,475
GRIP PLATES FOR A REVOLVER HANDLE
Edward M. Mikus, 17680 Dwyer St., Detroit, Mich. 48212
Filed Mar. 3, 1967, Ser. No. 620,356
4 Claims. (Cl. 42—71)

Grip plates have been added to the handle of a revolver, with one plate being lengthened and having a supporting shoulder terminating short of the drum at an

angle of approximately 45° with the barrel, so that the revolver can be carried on the wearer's belt without a bolster.

3,397,476
AUTOMATIC SPEAR GUN
William W. Weber, 608 E. 5th St., Madera, Calif. 93637
Filed Feb. 25, 1966, Ser. No. 530,006
5 Claims. (Cl. 43—6)

1. A spear gun comprising a body having a firing tube; a source of compressed gas, the body having a conduit connecting the source of compressed gas to the firing tube; a trigger actuable regulator in the conduit for controlling the supply of compressed gas to the firing tube; holder means for spears, the holder means being rotatably mounted on the body and adapted upon predetermined increments of stepped progression succesively to communicate with the firing tube; and means carried by the body and connected to the conduit to direct compressed gas against, and thereby to rotate the holder, when the regulator is actuated.

3,397,477
FISHHOOKS
James D. Hand, 137 Hudson St., Crestview, Fla. 32536
Continuation-in-part of application Ser. No. 488,658, Sept. 20, 1965. This application July 12, 1966, Ser. No. 565,360
12 Claims. (Cl. 43—15)

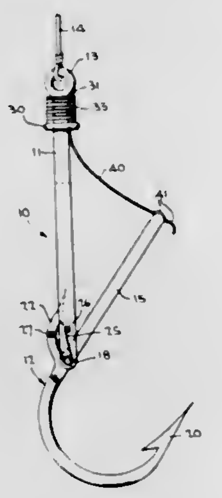

A fishhook is pivotally connected to the bifurcated portion of a line connected stem element substantially at the juncture of the shank and bight portions of the fishhook and is swingable between a cocked position, in which the shank is releasably held at an angle to the stem element and a fish snagging position, in which the shank is received in the space between the bifurcations. In separate embodiments, a spring and/or line is utilized to propel the fishhook from cocked to snagging position. In the spring propelled embodiments, a coiled latch spring surrounds the stem element and the fishhook shank in the snagging position and a spring trigger arm releasably engages the free end of the fishhook shank and the latch spring in the cocked position.

3,397,478
FISHING DEVICE
Frederick J. Lowes, Jr., 500 Crescent Drive, Midland, Mich. 48640
Filed Oct. 22, 1965, Ser. No. 501,010
9 Claims. (Cl. 43—42.14)

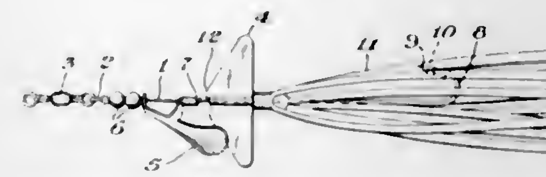

The present invention is a fishing device and more specifically a lure which attracts fish by emitting sonic impulses as it is drawn through the water. The sonic impulses are produced by at least one rotatable member and a helical cam which is raised by the follower and abruptly dropped by the action of the water.

3,397,479
COMBINATION FISHLINE FLOAT AND FISHHOOK REMOVAL TOOL
Cezar Tyjewski, 702 Emmett St., Battle Creek, Mich. 49017
Filed Oct. 23, 1965, Ser. No. 503,074
10 Claims. (Cl. 43—44.95)

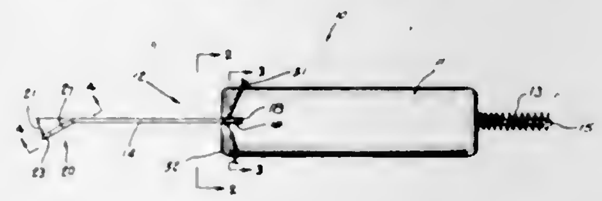

This is a combination fishing implement or tool wherein it has a float and a fishhook disgorger, in which combination the float acts as the handle for the fishhook disgorger, the shank of which passes lengthwise through the float. The float and fishhook disgorger also cooperate in frictionally binding and holding the fishline in a grooved portion of one end of the float, under the influence of a compression spring located at the opposite end of the float, on the shank of the fishhook disgorger. On the end of the fishhook disgorger shank opposite to said spring there is provided an extractor tip with a prong portion which is inclined moderately sidewise from said shank to facilitate engaging the fishhook during the disgorging operation.

3,397,480
WINDERS FOR FISHING LINES
Sigurd Walter Bengtsson, Rattgatan 6, Goteborg V, Sweden
Filed Aug. 30, 1965, Ser. No. 483,555
Claims priority, application Sweden, Sept. 29, 1964, 11,671/64
4 Claims. (Cl. 43—54.5)

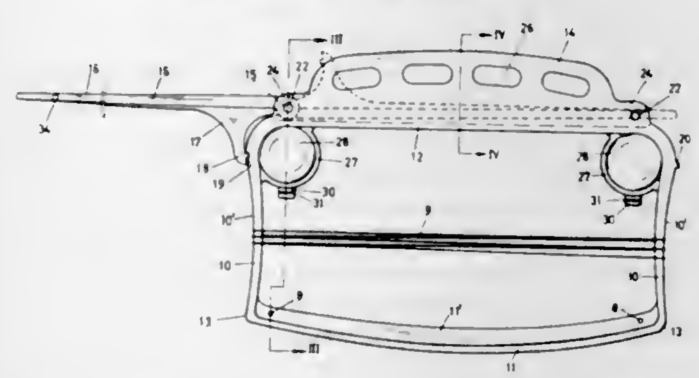

The invention is concerned with a winder for a fishing line and which winder has substantially the shape of a four sided frame with two resilient sides thereof upon which the fishing line can be wound and a foldable fishing rod attached to said frame.

3,397,481
LAUNCHING AND RELEASE MEANS FOR AIRBORNE TOYS
Arthur H. Boese, Oklahoma City, Okla., assignor to Novel Ideas Incorporated, Oklahoma City, Okla., a corporation of Oklahoma
Filed Oct. 24, 1965, Ser. No. 504,588
4 Claims. (Cl. 46—86)

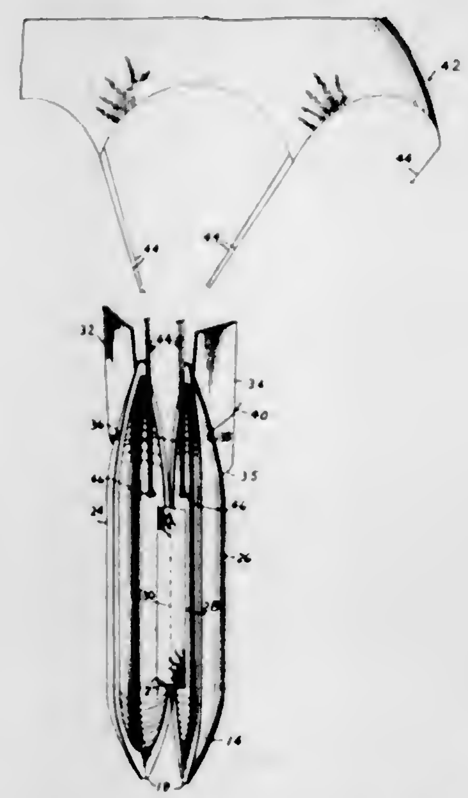

A longitudinally divided hollow toy rocket-shaped body, having tail fins, has its respective body halves hingedly connected at one side and normally biased to an open position. A toy parachute is connected with and contained by the hollow body for lowering the latter through the atmosphere. Apertures, formed in the tail end of the body, slidably receive a cord which frictionally holds the body halves closed during launching and upward flight and permits the body halves to open and release the parachute near the upper limit of the rocket's flight.

3,397,482
CHILD RETAINER HAVING SOUNDING MEANS
Emile L. Bibeau and Muriel T. Bibeau, both of 5 Colony Way, Nashua, N.H. 03060
Filed May 3, 1966, Ser. No. 547,255
8 Claims. (Cl. 46—175)

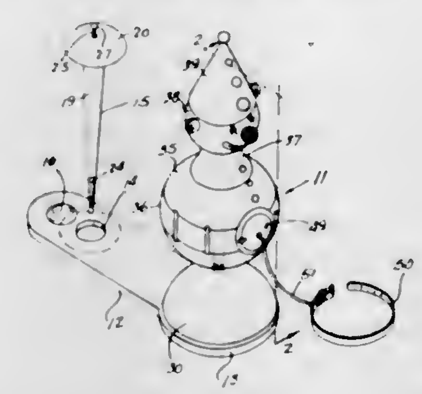

1. A child tethering device comprising a supporting base, means to anchor said base against movement, an upstanding hollow toy figure mounted on said base, a bulb whistle device mounted in the figure, said whistle device including a flexible bulb, extensible and contractile fastening means surrounding said bulb and secured to the figure at its inner end and having a free outer end, said fastening means contracting to exert squeezing pressure on the bulb responsive to longitudinal extension of the outer free end of the fastening means, a tether means adapted to be secured to a child, and means connecting said tether means to the outer free end of said fastening means.

3,397,483
MODEL-RAILROAD TRUCK ASSEMBLY
Harold A. Lingard, Merchantville, N.J., assignor to Mantua Metal Products Co., Inc., Rose Hill, N.J., a corporation of New Jersey
Filed May 12, 1966, Ser. No. 549,632
6 Claims. (Cl. 46—216)

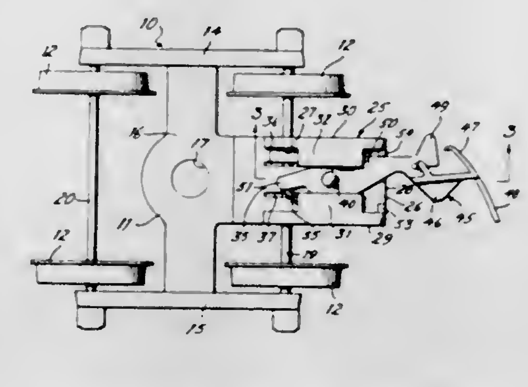

1. In a model-railroad car, the combination comprising a wheeled frame, a hollow extension on said frame having its outer end open, a pin on said extension projecting interiorly thereof, mounting means mounting said pin on said extension for resilient retraction from the interior thereof, a coupler element outward of said extension, and an arm on said coupler element inserted into said extension loosely through the open end thereof, said arm having a hole removably receiving said pin to mount said coupler for limited rotation about said pin.

3,397,484
SOUND AND OPTICAL EFFECTS TOY
John W. Ryan, Bel-Air, Berne E. Danielsen, Pacific Palisades, and Jacob De Gelder, Hawthorne, Calif., assignors to Mattel, Inc., Hawthorne, Calif., a corporation of California
Filed Oct. 22, 1965, Ser. No. 501,531
16 Claims. (Cl. 46—175)

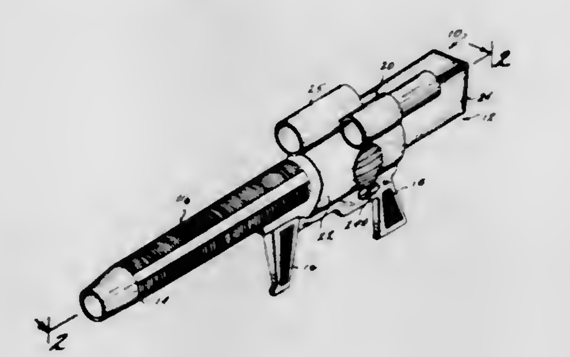

A toy gun having a simulated telescopic sight through which a remote target can be viewed through a "half silvered" mirror set at an angle in the line of sight. A film strip in the toy gun is moved so as to cause successive images thereon to be reflected by a V-shaped mirror onto the half silvered mirror. Sound producing means operate synchronously with the film strip to reinforce the psycho-

logical effect of the successive images, and a trigger is effective to start a cycle of operation at the will of the user.

3,397,485
PLANT STAKE
Carl E. Peterson, Upper Montclair, N.J., assignor to Eastern Tool & Mfg. Co., Belleville, N.J., a corporation of New Jersey
Filed Nov. 30, 1967, Ser. No. 687,035
1 Claim. (Cl. 47—47)

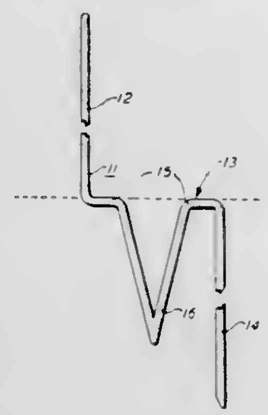

A stake, adapted to be driven into the ground without the use of tools, by the use simply of foot pressure, said stake being of such structural features as to facilitate the embedding thereof into the ground, to firmly anchor and interlock therewith, and for the rigid support thereby of a plant.

3,397,486
TURNSTILE
Gerry H. Foxwell, Granada Hills, and Edward Dillingham, Pacific Palisades, Calif., assignors to Advance Data Systems Corporation, a corporation of New York
Filed Feb. 10, 1966, Ser. No. 526,461
11 Claims. (Cl. 49—47)

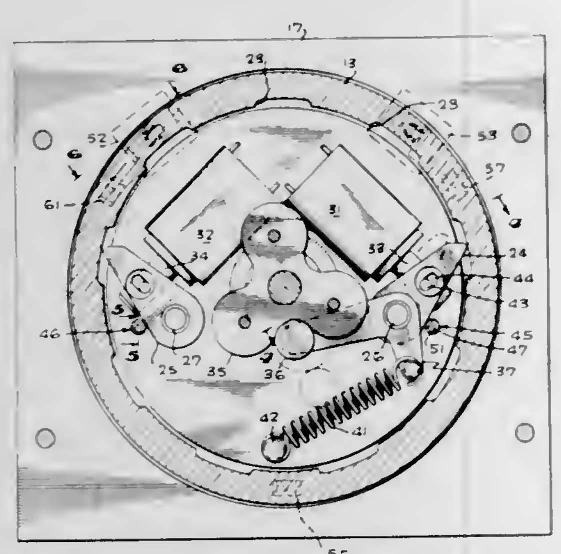

An electrically controlled, bi-directional turnstile having the operating mechanism enclosed within a cup-shaped hub is described. A pair of solenoid-controlled pawls, one right and one left, cooperate with shoulders formed on the inner wall of the hub. Direction of rotation is determined by which solenoid is actuated. A control circuit includes a token-actuated switch, a relay and a cam operated indexing switch in circuit with each solenoid. The token-actuated switch energizes the relay, which holds through a holding contact and the normally closed indexing switch. The associated solenoid is energized, removing the pawl and freeing the turnstile for rotation. After being rotated to admit one person, the indexing switch is opened momentarily by a cam on the hub, opening the relay circuit, deenergizing the solenoid, and releasing the pawl to its normal locking position. Payment may be required for rotation of the turnstile in either direction or in both directions, or may be set to allow free access in either, or both directions, as the installation requires.

3,397,487
SLIDING DOOR CONSTRUCTION AND MEANS FOR STORING SAME
John E. Hunt, Norwood, Mass., and Michael R. Fiore, Warwick, R.I., assignors to The Alumiline Corporation, Pawtucket, R.I., a corporation of New York
Continuation of application Ser. No. 508,504, Nov. 18, 1965. This application Mar. 28, 1967, Ser. No. 626,632
5 Claims. (Cl. 49—130)

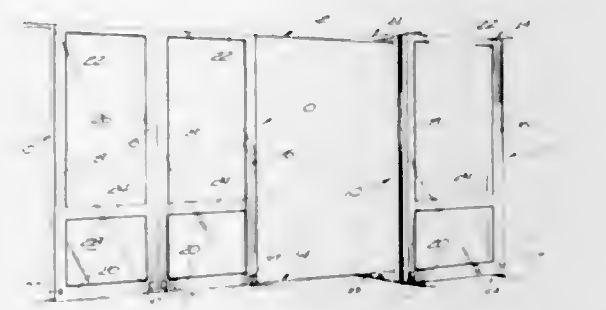

A sliding door construction that is movable in upper and lower track assemblies and that includes vertically adjustable guide members that are receivable in said track assemblies, the door construction being movable in said track assemblies from an entrance opening to a storage position.

3,397,488
CABLE TENSIONING APPARATUS FOR MOVABLE DOOR CONTROLLER
Richard Goldstein, Deerfield, Ill., assignor, by mesne assignments, to Chamberlin Manufacturing Corporation, Elmhurst, Ill., a corporation of Iowa
Filed Mar. 7, 1967, Ser. No. 621,162
9 Claims. (Cl. 49—199)

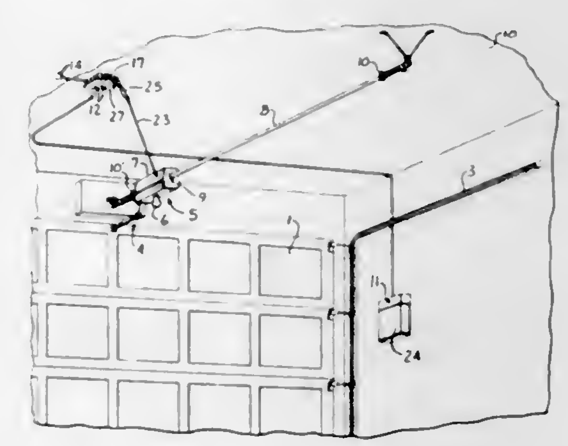

A flexible cable of current carrying conductors extending between a stationary junction box and a movable door operator unit which moves between extreme positions on a guide rod where the door connected to the door operator unit moves between a vertical lowered position and a horizontal raised position is maintained in a taut flexible position by anchoring the flexible cable to the end of a horizontal pivoted arm pivotally supported about a vertical axis and spring urged into an extreme position where the end of the arm points away from the path of travel of the door operator unit, the end of the arm being capable of swinging over a wide arc against the return force of the spring and toward the path of travel of the door operator unit so as to follow the movement thereof.

3,397,489
PRESSURE OR VACUUM VESSELS
Ronald Joseph Cook, London, England, assignor to Allen and Hanburys Limited, London, England, a British company
Continuation-in-part of application Ser. No. 366,835, May 12, 1964. This application Feb. 7, 1966, Ser. No. 525,541
Claims priority, application Great Britain, May 14, 1963, 19,110/63
6 Claims. (Cl. 49—281)

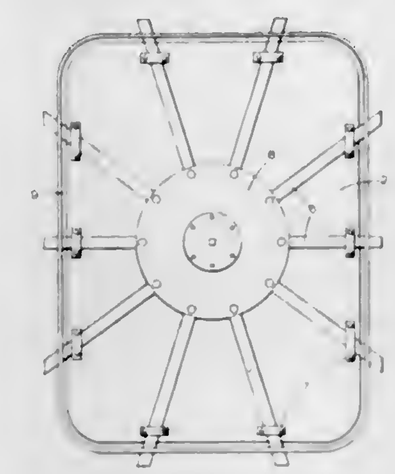

An improved door for pressure and vacuum vessels, comprises a plurality of arms which are connected at the inner end to a central disc, while the outer ends project beyond the door and engage with slots in the vessel. A piston and cylinder unit opens and closes the door, while another piston and cylinder unit rotates the disc to move the arms in and out of engagement with the slots. The two units are operated by a single source of power and have a single control. Manual operation is also possible.

3,397,490
SEALABLE CLOSURE
Edward Ronald Carlson, New Fairfield, Conn., assignor to The Presray Corporation, Pawling, N.Y., a corporation of New York
Filed Apr. 12, 1967, Ser. No. 630,341
9 Claims. (Cl. 49—482)

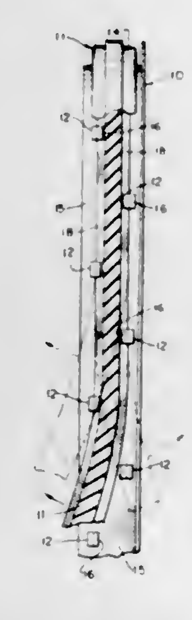

A sealing arrangement utilizing a flexible, pneumatically inflatable sealing strip, in which the strip is attached to a door frame by intermittently spaced, staggered clips, providing for simple installation and removal of the strip by flexing the strip in serpentine fashion along its longitudinal axis.

3,397,491
COTTON PICKER SPINDLE RECONDITIONING MACHINE
Percy A. Keith, 1322 E. 2nd, Pine Bluff, Ark. 71601
Filed Aug. 5, 1965, Ser. No. 477,364
9 Claims. (Cl. 51—34)

A reconditioning machine for grinding or sharpening

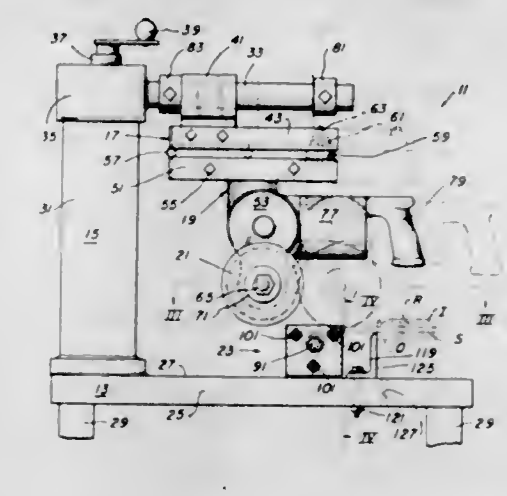

cotton-picking spindles. The machine is provided with a clamp mechanism for removably holding a pair of Rust-type cotton-picker spindles, preferably while they are still in the slats. A pair of rotatably driven grinding wheels are mounted from a carriage which is pivotally mounted from another carriage that in turn is rectilinearly movable along track structure so that the grinding wheels can be moved into engagement with the spindles and therealong for grinding grooves longitudinally and simultaneously in both of the spindles. The pivoting of one carriage relative to the other permits limited vertical movement of the grinding wheels as the carriage is moved along the track structure so that the machine is particularly useful in grinding bent spindles since in grinding a groove of uniform depth in a bent spindle the grinding wheel must follow a slightly curved path.

3,397,492
DRILL BIT GRINDING ACCESSORY
Bryan C. Wilson, 23228 Edmonds Way, Edmonds, Wash. 98020
Filed Mar. 28, 1966, Ser. No. 542,427
4 Claims. (Cl. 51—219)

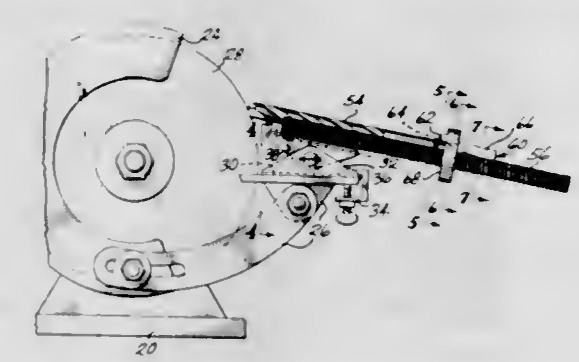

A drill bit support to present and to position a drill bit for grinding and sharpening by rotary driven grinding wheel and at the periphery thereof. A substantially horizontal supporting surface and a drill bit holding and positioning carriage slidably and pivotally mounted on said horizontal supporting surface by an open pivotal connecting means, and wherein such carriage comprises an externally threaded rod having a longitudinally extending V-shaped slot to support the drill bit during sharpening. In connection with said V-shaped slot, there is provided

a drill bit end stop slidable therein, and an internally threaded gauge connected with said rod and also slidably connected with said stop to position the stop longitudinally of said V-shaped slot.

3,397,493
SURFACING APPARATUS
Carle W. Highberg, Murray Hill, N.J., assignor to Engelhard Hanovia, Inc., Newark, N.J., a corporation of New Jersey
Filed Dec. 9, 1964, Ser. No. 417,065
7 Claims. (Cl. 51—356)

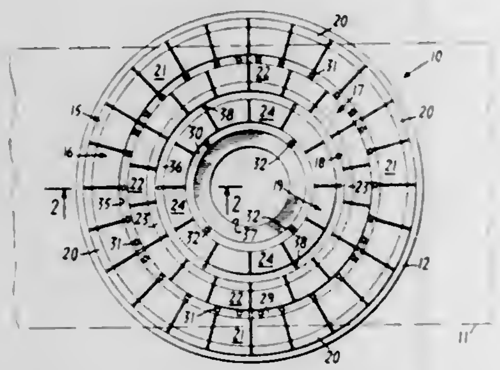

Apparatus including a grinding wheel having a plurality of concentric fixed abrasive annular grinding means having abrasive particles bonded therein in respective predetermined concentrations and having substantially coplanar grinding faces wherein the outermost one of the concentric grinding means has a materially lower concentration than the next adjacent radially inward one of the concentric grinding means or wherein the degree of concentration of adjacent concentric grinding means varies in a predetermined progressive relation from the radially outermost concentric grinding means.

3,397,494
BUILDING APPARATUS AND METHOD OF MAKING SAME
James C. Waring, Richmond, Va., assignor to Reynolds Metals Company, Richmond, Va., a corporation of Delaware
Filed Apr. 4, 1966, Ser. No. 539,997
5 Claims. (Cl. 52—122)

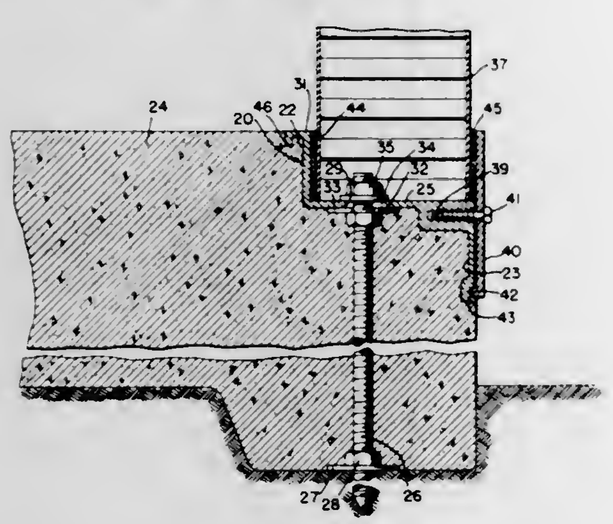

This disclosure relates to a building construction and method of making same in which prefabricated wall panels are supported on generally Z-shaped beam supports. Each beam support is precisely adjusted to position a top straight edge thereof for use as a screed used in leveling a poured floor formed within the outline of the beam supports while simultaneously positioning a supporting surface for such prefabricated panels.

3,397,495
PARTITION WALL WITH YIELDABLE CAP MEMBERS
William J. Thompson, Burlingame, and Daniel K. Cable, Lakewood, Calif., assignors to Angeles Metal Trim Co., Los Angeles, Calif., a corporation of California
Filed Jan. 19, 1966, Ser. No. 521,588
10 Claims. (Cl. 52—241)

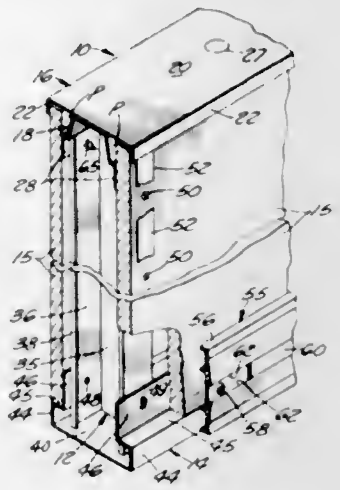

The present invention includes a metal cap to be disposed over the top of a dry-wall partition against an overlying ceiling to position the top of the partition, the cap having yieldable depending outer flanges which slope downward and inward for frictionally receiving the upper outer edge portions of upstanding wallboard slabs, the cap also having depending inwardly disposed downwardly and outwardly sloping walls forming tapered pockets with the outer flanges to receive the upper ends of the wallboard slabs in tension when the wallboard slabs are in vertical position.

3,397,496
LOCKING MEANS FOR ROOF AND WALL PANEL CONSTRUCTION
Lester M. Sohns, Arlington, Wash., assignor to A.S.K. & Associates, Inc., Everett, Wash., a corporation of Washington
Filed Feb. 4, 1965, Ser. No. 430,268
3 Claims. (Cl. 52—286)

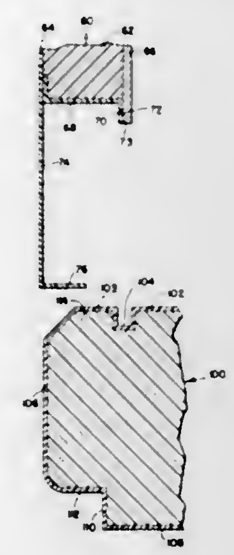

Interlocking wall, roof and floor modular panel units made of a plastic foam core sandwiched between resin reinforced glass fiber skins. Each panel unit has mating side edge or bottom edge locking structure for engaging an abutting panel or for securing to a floor structure. The edge structures are also made of resin reinforced glass fiber regardless of the particular configuration of the locking features involved.

3,397,497
DECK SYSTEM
Yale R. Shea, Hales Corners, and John S. Hickman, Shorewood, Wis., assignors to Inland Steel Products Company, Milwaukee, Wis., a corporation of Delaware
Continuation of application Ser. No. 428,013, Jan. 14, 1965. This application Nov. 28, 1966, Ser. No. 597,482
5 Claims. (Cl. 52—334)

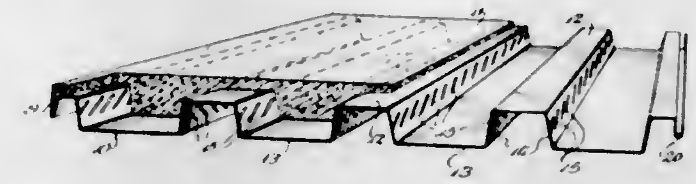

A panel adapted for use in a composite concrete-metal panel structure wherein the panel comprises a plurality of trough-shaped portions having projections extending from the walls in oblique directions with the projections having a total cross-sectional area such that the panel is capable, when employed with concrete, to form a composite unit of supporting a horizontal tensile load free of separate discrete reinforcing bars.

3,397,498
CORNER STRUCTURE FOR LINING WALLS AND OTHER SURFACES
Timothy Murphy, 5 Woodgrove, Cross Douglas Road, County Cork, Ireland
Filed Feb. 13, 1964, Ser. No. 344,755
Claims priority, application Ireland, Feb. 18, 1963, 126/63
3 Claims. (Cl. 52—385)

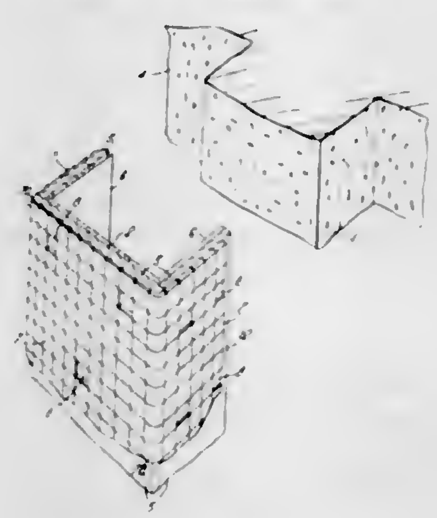

1. Means for lining adjacent wall surfaces which meet at an angle comprising a plurality of sheets of substantially rigid material secured together in angularly disposed relation conforming to said adjacent wall surfaces, said sheets having a layer of yieldable material on one side and on the other side a multiplicity of surface lining units secured thereto by adhesive in substantially contiguous arrangement but isolated areas thereof being left uncovered, said sheets having exposed rear surfaces consisting of the surfaces of said yieldable material which are opposite said rigid material.

3,397,499
SUPPORT SYSTEM FOR A CEILING
John R. Ward, Chicago, Ill., assignor to Inland Steel Products Company, Milwaukee, Wis., a corporation of Delaware
Filed Mar. 17, 1965, Ser. No. 440,385
18 Claims. (Cl. 52—495)

A ceiling system and components therefor, which system includes a hanger assembly comprising spaced runners, means for supporting the runners from a roof

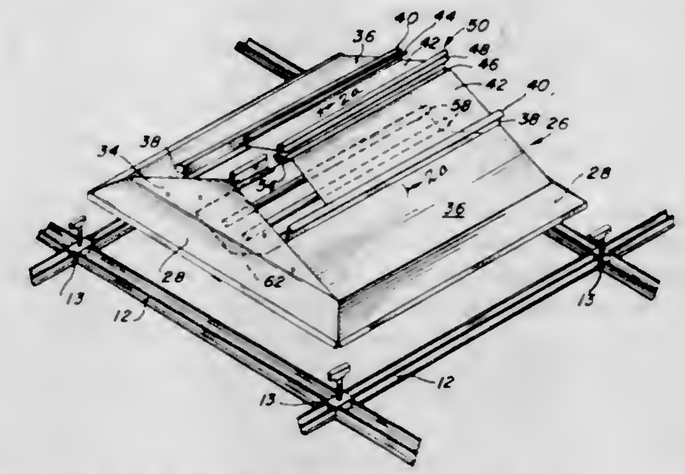

structure and ceiling closure elements supported by the runners.

3,397,500
BUILDING STRUCTURE WITH ALTERNATING STRUCTURAL MEMBERS AND PANELS IN COMPRESSION
Robert Watson, Jr., 57th and Garfield St., Hinsdale, Ill. 60521
Filed July 20, 1966, Ser. No. 566,579
4 Claims. (Cl. 52—495)

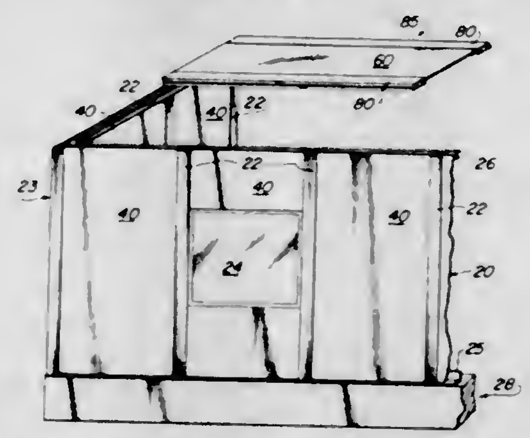

An improved building structure comprising alternating structural shapes and panels wherein the panels are maintained under compression between the structural shapes resulting in a wedging action between each junction of a panel and structural shape, forming a generally weathertight seal.

3,397,501
FIRE-RATED RUNNER WITH EXPANSION SECTION
Reinhardt H. Jahn, Riverside, Ill.
(4901 S. Austin Ave., Chicago, Ill. 60638)
Filed Oct. 23, 1965, Ser. No. 503,326
3 Claims. (Cl. 52—573)

An expansion joint for a fire-rated suspended ceiling structure in which a runner comprising a generally upstanding planar web portion terminating at its upper end in a longitudinally extending reinforcing member, and at its lower end in transversely extending flange portions disposed at opposite sides of the web portion, is provided with two longitudinally extending elongated slots in the web portion thereof, one of which is disposed adjacent the flange portions and the other adjacent the reinforcing member, whereby the flange portions form a generally

planar section which may readily deform downwardly way from the web portion, said slots defining a planar web section therebetween which may readily deform laterally out of its normal plane and a continuous section of said reinforcing member which completely spans the adjacent longitudinal slot and is integrally connected at its ends to the adjacent portions of said reinforcing member, said reinforcing section having a plurality of slots therein longitudinally spaced along and intersecting the adjacent longitudinal slots, said longitudinally spaced slots being so disposed that said reinforcing section provides lateral and longitudinal stiffening of the runner at said longitudinal slots, said slots in said reinforcing section permitting the portions of said reinforcing section intermediate the slots therein, under the application of compression forces thereto, to readily deform upwardly away from said web portion.

3,397,502
COMPOSITE TRUSS STRUCTURE
Eric Simpson, Jr., Henrico County, Va., assignor to Reynolds Metals Company, Richmond, Va., a corporation of Delaware
Filed Nov. 10, 1966, Ser. No. 593,571
6 Claims. (Cl. 52—693)

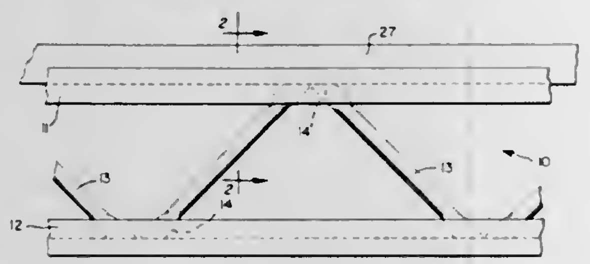

This invention discloses a composite truss structure comprising top and bottom metal chord members having oppositely facing channels. Web elements or bracing members are disposed in and between one set of oppositely facing channel members of the top and bottom metal chord members while a secondary nailable element is disposed in at least one of the other oppositely facing channel elements for attachment of the composite truss structure to a desired fixed structural element of a building, for example.

3,397,503
METHOD FOR CONSTRUCTING PRESSURE VESSELS
Felix Max Adler, "Woodlands," Birds Hill Road, Oxshott, England
Filed Dec. 15, 1965, Ser. No. 523,822
Claims priority, application Great Britain, Dec. 17, 1964, 51,439/64, Patent 51,439
5 Claims. (Cl. 52—745)

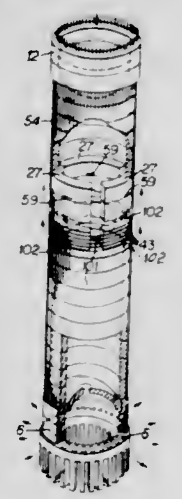

A pressure-resistant vessel is made of a stack of prestressed annular members each consisting of two or more segments. The pre-stressing of each annular member is effected by winding a cable tautly around the annular member and forcing the segments apart by means of jacks disposed between the ends of adjacent segments, so as to tension the cable. The jacks are then replaced by an infill which maintains the cable in the tensioned state. The stack of annular members is capped at each end and cables extending longitudinally from end to end of the capped stack are tensioned and held in the tensioned state, thereby forming a monolithic structure.

3,397,504
METHOD OF HANDLING BEVERAGE BOTTLES
James G. Drennan, San Mateo, Calif., assignor to Owens-Illinois, Inc., a corporation of Ohio
Filed Sept. 2, 1965, Ser. No. 484,678
3 Claims. (Cl. 53—26)

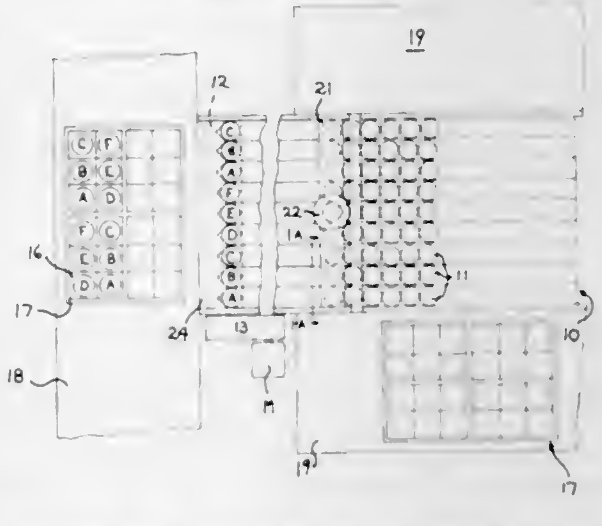

A procedure for placing filled beverage bottles in a six-cell "take-home" type carrier, wherein there will be a differently colored beverage in each cell, such procedure involving conveying bottles of differently colored beverage successively along each of six side-by-side lanes, segregating the lead transverse row of bottles from those following, then with a bottle gripper transferring three bottles from one end of the row and then the three bottles from the other end of the same row to the carrier.

3,397,505
PACKAGING MACHINE
Dean J. Critchell, Rochester, N.Y., assignor to Eastman Kodak Company, Rochester, N.Y., a corporation of New Jersey
Filed Mar. 15, 1965, Ser. No. 439,731
5 Claims. (Cl. 53—74)

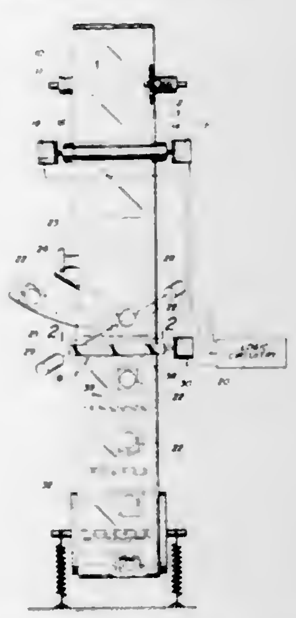

A packaging machine for sealing small parts in pouches formed in a folded web of thermoplastic film utilizing a reciprocating heat-sealing member which cooperates with a rotating resilient surface to form a seal between adjacent articles.

3,397,506
APPARATUS FOR PACKAGING
Grant E. Allen, Jr., and Glen P. Robinson, Jr., Atlanta, and Richard B. Inman, Dunwoody, Ga., assignors to Scientific-Atlanta, Inc., Atlanta, Ga., a corporation of Georgia
Filed Oct. 21, 1965, Ser. No. 499,896
9 Claims. (Cl. 53—112)

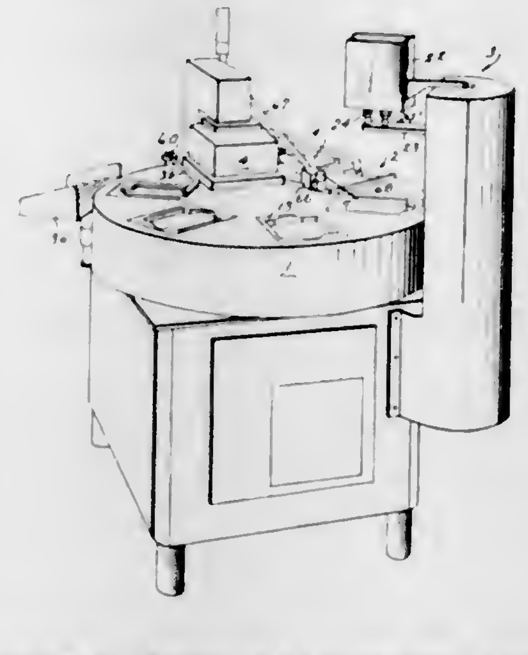

Apparatus for flushing a package with a gas other than air and closing the package. The apparatus is adapted for use with a cup, preferably semi-rigid plastic, having walls and a bottom with a flange extending outwardly from the top of the walls. A lid rests on the flange at opposite sides of the package and is bowed upwardly over the center of the package to provide a kind of tunnel for air and gas flow. The apparatus includes a suction inlet and an outlet for the replacement gas, positioned adjacent opposite sides of the package. The package is moved between these and gas flows through the aforesaid tunnel. Then the package moves to another station where the lid is sealed against the flange.

3,397,507
VACUUM PACKAGING APPARATUS
Donald W. Myers, Northbrook, Ill., assignor, by mesne assignments, to John Morrell & Co., Chicago, Ill., a corporation of Delaware
Filed Dec. 27, 1965, Ser. No. 516,559
7 Claims. (Cl. 53—112)

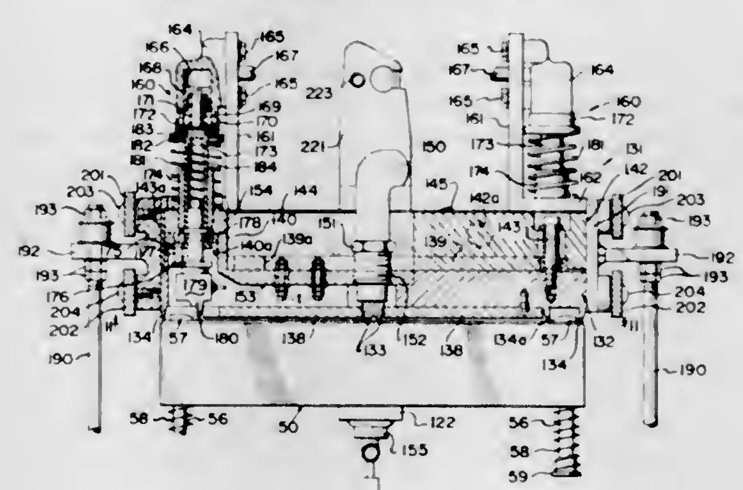

Vacuum packaging apparatus in which a lower layer of film is drawn downwardly into a product holder, and wherein an upper layer of film is bonded to the lower layer of film by a sealing head at a single sealing station. The sealing head includes first bonding means in the form of a rib having at least one discontinuous portion, which allow a vacuum to be drawn between the layers of film; and the sealing head further includes a final bonding means at the discontinuous portion of the rib for completing the bonding of the layers of film.

3,397,508
THERMOPLASTIC PACKAGING MACHINE
John H. Stroop, New York, N.Y., assignor, by mesne assignments, to Total Packaging Inc., New York, N.Y., a corporation of New York
Filed Aug. 6, 1965, Ser. No. 477,830
11 Claims. (Cl. 53—184)

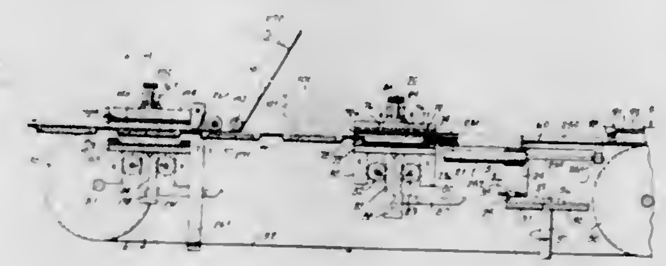

A packaging machine to thermoform, fill and cover tray-type packages from plastic sheeting. The machine is based on a system of in-motion work-performing stations mounted in sequence on a crank-driven bed moving constantly forward and backward in a stationary frame. The moving work-stations are activated by cams which are a part of the stationary frame. The plastic sheeting being formed into packages moves continuously through the machine, resting freely on endless idler-mounted bands which are driven continuously forward by directionally acting pawls which are part of the work-stations. The continuous motion of both the work-stations and the work in progress shortens the cycle time for each package formed and produces a faster packaging machine.

3,397,509
PACKAGING APPARATUS
John E. Ullman, Huntingdon Valley, Pa., assignor to Huntingdon Industries Incorporated, Bethayres, Pa., a corporation of Pennsylvania
Filed Apr. 25, 1966, Ser. No. 544,738
16 Claims. (Cl. 53—285)

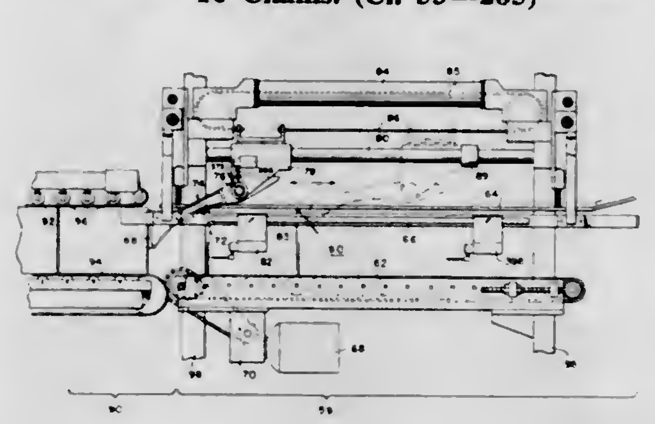

1. A machine for closing a filled case having a front end top flap and a rear end top flap extending outwardly from the case, said flaps having adhesive thereon, comprising means for turning down the front end top flap, means for turning down the rear end top flap of the case, and pusher means for moving the case into a compression unit and flattening said front flap against a preceding case to hold said front flap in compression to aid in setting the adhesive thereon.

3,397,510
CLOSURING OF CONTAINERS
Walter Harvie Wyard, Worcester, and John Charles Hill, London, England, assignors to The Metal Box Company Limited, London, England, a British company
Filed Jan. 19, 1965, Ser. No. 426,535
Claims priority, application Great Britain, Feb. 5, 1964, 4,948/64
3 Claims. (Cl. 53—341)

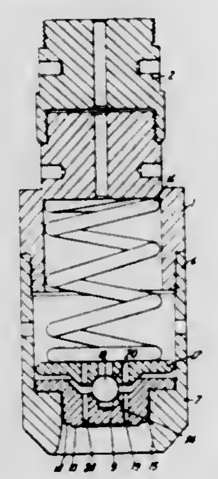

This disclosure relates to a closing head suitable for the application of closures to jars or like containers. The head comprises a sleeve terminating in a lower closure ring having camming surfaces formed thereon for the inwardly camming of the peripheral skirt of the closure. A closure contacting plunger is mounted within the sleeve and is biased downwardly by a spring-biasing member which acts upon the aforementioned plunger through a universal joint. Stop means within the sleeve lie in blocking relationship to the plunger and comprise the only means for maintaining the plunger within the sleeve.

3,397,511
DESICCANT-TYPE AIR DRYER EMPLOYING HEAT FOR REACTIVATION
Peter W. Dwyer, Paoli, and George L. Couch, Media, Pa., assignors to General Electric Company, a corporation of New York
Filed Mar. 31, 1965, Ser. No. 444,261
5 Claims. (Cl. 55—196)

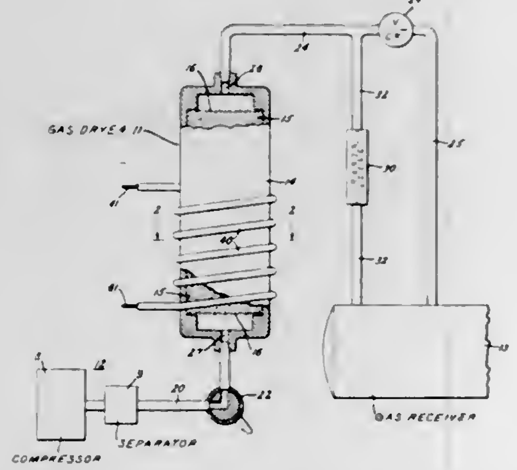

A heat-reactivated, desiccant-type air dryer in which operation can be transferred from reactivation to drying without requiring a time delay before drying is started. During reactivation, the upper region of the desiccant is maintained relatively cool and dry. Should it be necessary to transfer from reactivation to drying, this upper region will be in a condition to immediately adsorb moisture from the air passing upwardly therethrough during drying.

3,397,512
VAPOR-LIQUID SEPARATOR
James E. Webb, Administrator of the National Aeronautics and Space Administration with respect to an invention of Wyley D. Ward, Huntsville, Ala.
Filed Dec. 28, 1966, Ser. No. 605,518
3 Claims. (Cl. 55—204)

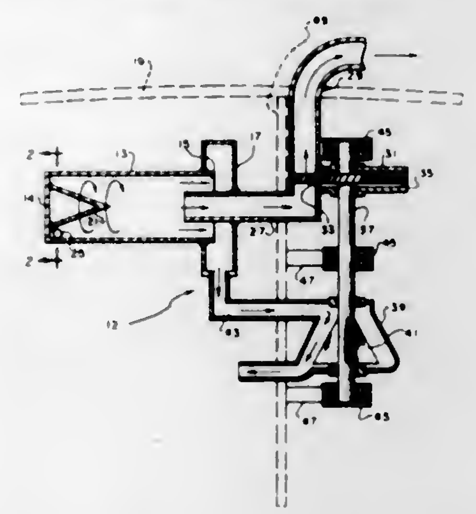

A device for separating vapor from liquid of a heterogeneous vapor-liquid fluid mixture ranging from 100% liquid to 100% vapor in a zero gravity environment wherein the separated vapor drives a pump that forces the separated liquid to the desired location thus avoiding the need for an additional power source to drive the pump. The heterogeneous fluid is expanded and swirled in a separation chamber and a vapor exhaust conduit receives the vapor at the central region of the swirl pattern while the liquid at the outer region of the swirl pattern is collected in a liquid collection manifold and pumped to the desired location.

3,397,513
OIL BATH AIR FILTER FLOW CONTROL
Max Ephraim, Jr., Evergreen Park, and Donald L. De Braal, Brookfield, Ill., assignors to General Motors Corporation, Detroit, Mich., a corporation of Delaware
Filed Oct. 4, 1965, Ser. No. 492,500
3 Claims. (Cl. 55—225)

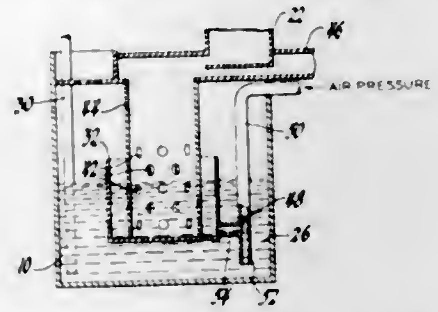

A control arrangement for controlling the flow of oil to the filter pads of an oil bath filter for a variable speed internal combustion engine wherein, under conditions of high engine speed, a source of air pressure proportional to engine speed prevents the flow of oil in the fluid passageway between an oil reservoir and the oil circulation system of the oil bath filter.

3,397,514
AIR FILTER
Otto Rothfeld, 862 Calle Roberto Espinoza, and Benno Dasch La Verbena 5040–D, both of Santiago de Chile, Chile
Continuation-in-part of application Ser. No. 387,869, Aug. 6, 1964. This application Sept. 13, 1966, Ser. No. 579,065
8 Claims. (Cl. 55—233)

In an air filter, air is passed through concentric filter cylinders which are supported in an oil bath and alternately perforated at their upper and lower portions. The cleaned air impinges against a cover plate so as to be

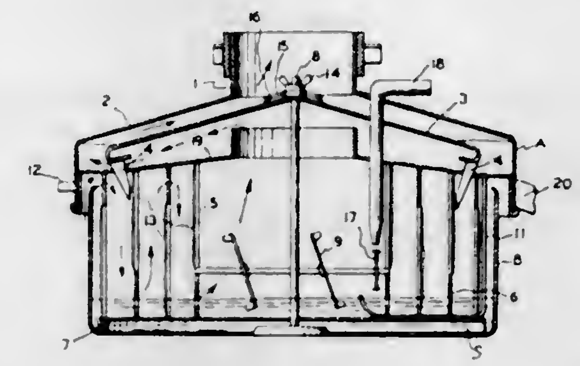

separated from entrained oil which is returned to the oil bath.

3,397,515
HOPPER VALVE FOR FILTER BAG INSTALLATION
Robert R. Johnson, Troy, N.Y., assignor, by mesne assignments, to Research-Cottrell Inc., Bridgewater, N.J., a corporation of New Jersey
Filed Oct. 23, 1965, Ser. No. 503,657
1 Claim. (Cl. 55—302)

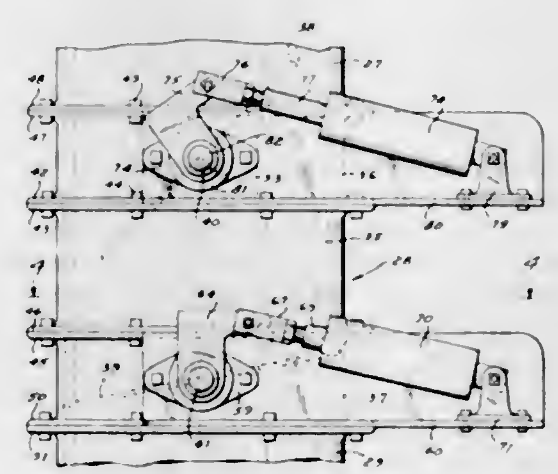

A dust collecting system consisting of a bag chamber, a plurality of filter bags disposed therein, means to clean the filter bags and discharging dust removed from said bags into a right circular cylindrical barrel having a vertically extending axis, first and second vertically spaced apart elliptical damper plates disposed within said barrel, each plate being pivotally mounted for rotation about its minor axis, the major axis of each plate when in its normally closed position defining an angle of 8° with the horizontal, said damper plates blocking passage of dust through said barrel when in closed position and providing a scraping action during movement from open to closed position, and first and second means for individually rotating said plates about their minor axis.

3,397,516
AIR FILTER FOR AIR BRAKE SYSTEMS
Werner Kobnick, Heidelberg, Germany, assignor to Berg Mfg. & Sales Co., a corporation of Illinois
Filed Jan. 16, 1967, Ser. No. 609,391
3 Claims. (Cl. 55—313)

An air line filter assembly including a chamber, a piston like disc sealing one end of the chamber, a filter movable, in response to its clogging and resultant increase in chamber pressure, on the disc in the chamber in one direction to open a clear passage for air moving in one direction, the filter movable in the other direction to open a second clear passage for air moving in another direction. A pivoted cover for the chamber is locked closed

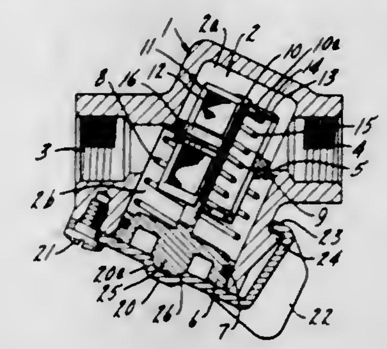

by engagement with the disc when the disc is under chamber pressure, the engagement being manually overcome with absence of chamber pressure.

3,397,517
DUST AND LIKE SOLID PARTICLE SEPARATOR
Andre F. De Vigan, 14898 Mayfield St., Detroit, Mich. 48205
Continuation of application Ser. No. 417,140, Dec. 9, 1964. This application Oct. 14, 1966, Ser. No. 587,386
6 Claims. (Cl. 55—400)

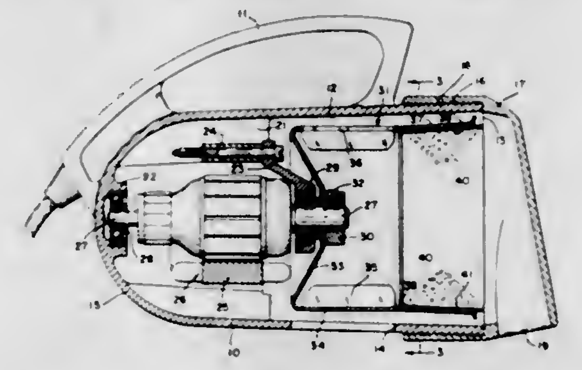

Apparatus for separating solid particles from a gas comprises a casing having longitudinally continuous annular side wall terminating in an open end inlet through which gas to be cleaned is introduced, a motor mounted within the opposite end of said casing, and a combined fan and particle collection member having an end wall secured on the motor shaft having an axially extending cylindrical side wall extending substantial coaxially with and in close association with the annular wall of said casing and having an open end adjacent said inlet but within said casing, there being an internal annular imperforate particle deposit and collection throat within the member at the open end a circumferential row of fan blades projecting radially inwardly axially inwardly of the throat with gas discharge openings being formed between said blades, and there being a cleaned gas outlet opening in said casing side wall adjacent said gas discharge openings.

3,397,518
METHOD OF SEALING THE PERIPHERAL EDGE OF A FLAT PLEATED FILTER PANEL AND THE FILTER FORMED THEREBY
Kenneth Arthur Rogers, Chandlers Ford, England, assignor to General Motors Corporation, Detroit, Mich., a corporation of Delaware
Filed July 19, 1967, Ser. No. 654,607
Claims priority, application Great Britain, July 21, 1966, 32,844/66
10 Claims. (Cl. 55—497)

In order to form a seal about a rectangular panel-form pleated filter element it is placed in mould having a trough shape peripheral portion filled with plastisol, the peripheral portion of the panel element being formed so as partly to enter the trough and displace the plastisol up-

wardly so that it is forced into the spaces between the pleats at the sealed ends thereof and forms a continuous

seal strip adjacent the outer edge of the panel at one face thereof.

3,397,519
CARBURETOR MOUNTING FOR AIR CLEANER
Joseph Max Splawski, Chicago, Ill., assignor to Badger Manufacturing Corporation, Chicago, Ill., a corporation of Illinois
Filed Sept. 29, 1965, Ser. No. 491,206
9 Claims. (Cl. 55—505)

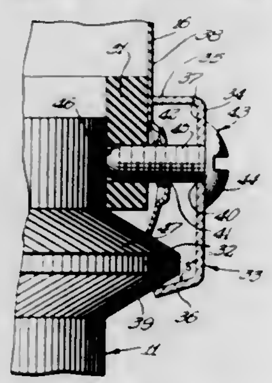

A C-shaped clamp for attaching an air cleaner to a carburetor air horn having a lock plate interconnecting a brace piece and a tension finger. The clamp includes a fastener extending from the lock plate and threadedly engaged in a bore of a neck of the air cleaner to mount the clamp and urge it towards the neck to cause the tension finger to engage a bead on the carburetor air horn to cause the neck to become seated against the bead.

3,397,520
HAY HARVESTING AND CONDITIONING DEVICE
Edward J. Johnston, La Grange, and Peter J. Peacock, Western Springs, Ill., assignors to International Harvester Company, a corporation of Delaware
Original application Mar. 15, 1965, Ser. No. 439,588. Divided and this application June 9, 1967, Ser. No. 644,894
9 Claims. (Cl. 56—1)

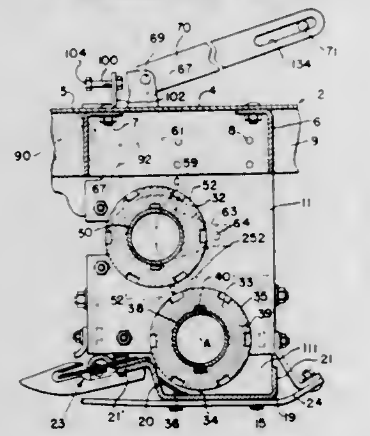

A mower conditioner unit having a belt driving two rollers, linkage to close and open the rollers, a clutch pulley on the linkage engageable with the belt to tighten it when the rollers are closed and loosen it when the rollers are open, the linkage connected to the wheels supporting the unit and elevating the unit while opening the rollers and declutching the drive and vice versa.

3,397,521
ROTATABLE DOUBLE-HEADED LAWNMOWER
Walter W. Danuser, Tulsa, Okla., assignor to Danuser Machine Works, Inc., Tulsa, Okla., a corporation of Delaware
Filed Dec. 15, 1964, Ser. No. 418,474
12 Claims. (Cl. 56—25.4)

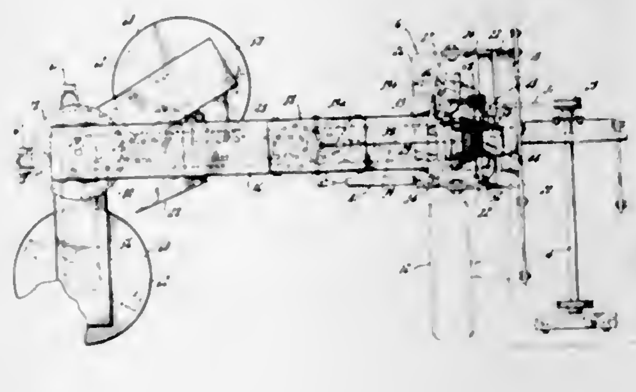

This invention relates to a rotary mower of the type which can mow about stationary objects, for example fence posts and the like. The invention comprises a pair of spaced mowing blades rotatable on arms which extend outwardly from a movable frame. The arms and rotatable blades are arranged to traverse through a complete arc in mowing about an object with initiation of such rotary movement being caused either by the mower operator or by contact with an object in the mowing path. Rotation of the arms and blades is in only one direction and is accomplished by a positive drive.

3,397,522
COTTON HARVESTER
Leon F. Sanderson and Richard W. Hook, Des Moines, and Myron L. McCunn, Dallas Center, Iowa, assignors to Deere & Company, Moline, Ill., a corporation of Delaware
Filed July 6, 1965, Ser. No. 469,484
24 Claims. (Cl. 56—30)

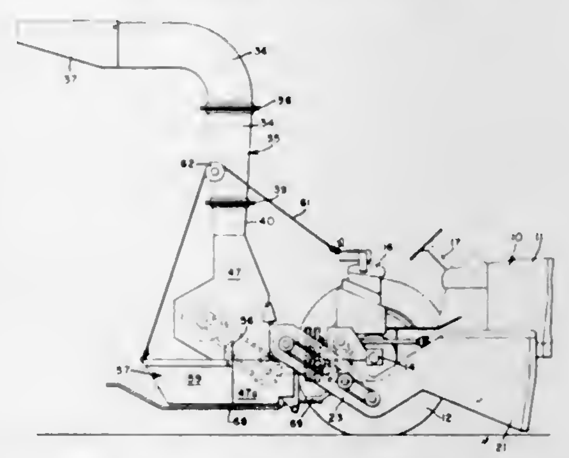

A material conveying and separating structure for use on a cotton harvester that includes a chamber that receives a mixture of ripe and green bolls from a cotton harvester, a blower duct extending vertically from the chamber and with a blower directing air through the duct, and a communication duct that extends between the chamber and blower duct that operates to induce or draw the ripe bolls from the chamber.

3,397,523
COTTON HARVESTER
Arthur L. Hubbard, Des Moines, Iowa, assignor to Deere & Company, Moline, Ill., a corporation of Delaware
Filed July 9, 1965, Ser. No. 470,838
3 Claims. (Cl. 56—41)

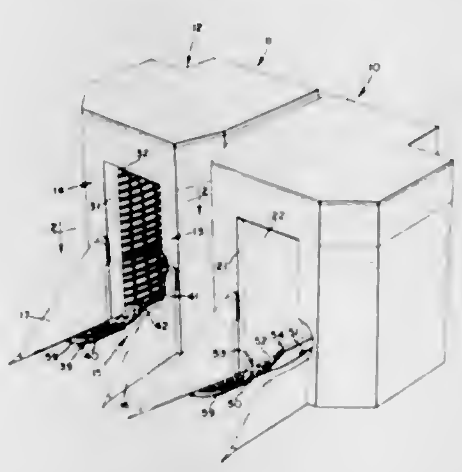

A cotton salvaging structure for use with a cotton picker having a plant passage formed by inner sides of a pair of adjacent upright compartments. The cotton is picked by picking spindles that are disposed in vertically spaced horizontal rows that extend periodically in the passage. The salvaging structure includes laterally coextensive plates fixed to the respective sides of the compartments and extend into the passage. The plates include forward horizontal portions forward of the spindles adjacent the ground, rear portions between the two lower rows of spindles, and inclined portions extending between the forward and rear portions.

3,397,524
MOWING APPARATUS HAVING BELT DRIVE
Walter D. Hofer, Brocket, Alberta, Canada, assignor of fifty percent each to John C. Swinarton, Fort MacLeod, Alberta, and Thomas Robert Gorman, Champion, Alberta, Canada
Filed Aug. 27, 1965, Ser. No. 483,248
19 Claims. (Cl. 56—290)

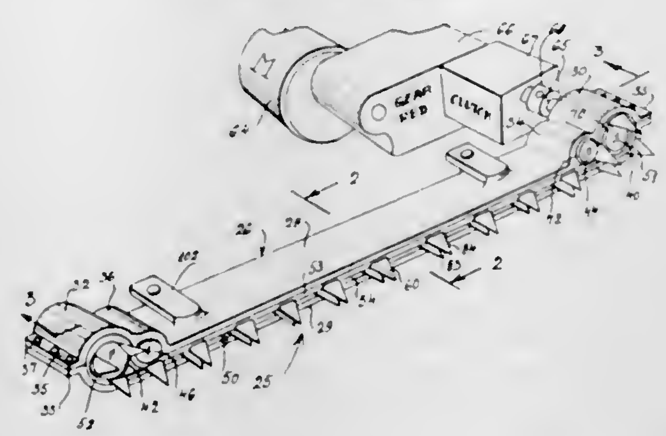

1. A mower assembly comprising an endless flexible belt, spaced cutting blades with angularly disposed cutting edges extending outwardly of one edge of said belt, said blades being flush with the inner side of the belt, a housing including a pair of flat walls disposed parallel to each other, means holding said walls spaced apart at adjacent portions thereof a distance equal to twice the thickness of said belt, said belt having juxtaposed straight sections located between looped ends thereof slidably disposed between said plates, two rollers at opposite ends respectively of said housing enclosed by said walls, said looped ends of the belt being engaged on said rollers, and motor means connected to one of the rollers for driving the belt continuously so that the cutting blades at said straight sections of the belt slidably cooperate with each other to exercise a cutting action while the belt is driven.

3,397,525
BREAKAWAY KNIFE HOLDER
Robert W. Woodring, La Grange, Ill., assignor to International Harvester Company, Chicago, Ill., a corporation of Delaware
Filed July 1, 1965, Ser. No. 468,737
13 Claims. (Cl. 56—294)

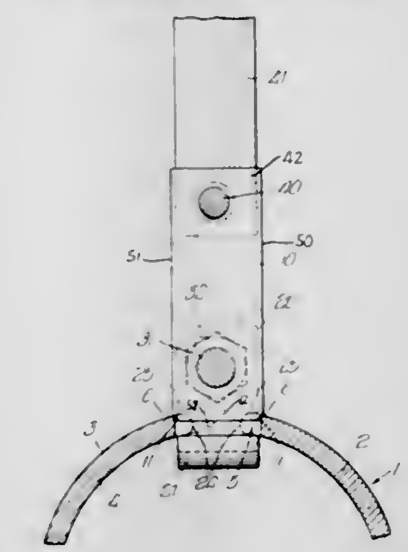

1. A knife holder for a cutter having a rotor shaft including an exterior abutment surface, said holder comprising

an elongate member including a cam surface on its lower portion,

means to pivotally connect said member to said shaft with said cam surface adjacent to said abutment surface on said shaft,

clamping means to frictionally retain said member in a transverse position with respect to said shaft,

means to urge said cam surface into releasable engagement with said abutment surface with said member in said transverse position, and

means to secure a cutting knife to said member.

3,397,526
FRUIT PICKER
Marvin A. Barrow, P.O. Box 123, Mont Belvieu, Tex. 77580
Filed Apr. 7, 1966, Ser. No. 540,888
5 Claims. (Cl. 56—340)

1. A device for picking fruit from a fruit tree comprising:

(a) a cutting means for removing the fruit from the tree;

(b) means for receiving the fruit after the fruit has been removed from the tree mounted with said cutting means, and

(c) handle means having an upper and lower end, said upper end being mounted with said means for receiving the fruit and said lower end being adapted to be gripped by an individual user standing on the ground adjacent the tree whereby said cutting means and said means for receiving the fruit mounted therewith are moved to successive pieces of fruit so that the successive pieces of fruit are removed by said cutting means and thereafter positioned in said means for receiving;

(d) said means for receiving fruit including an enclosure having a bottom, a plurality of side walls with some of said side walls forming a pointed forward end, said enclosure having an upper wall which with said forward end defines an opening through which fruit to be harvested enters said enclosure;

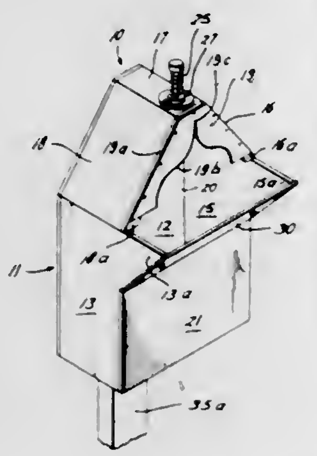

(e) said cutting means includes a blade means secured to the upper portions of said side walls adjacent said forward end and extending into said opening such that the stem of the fruit which entered said enclosure through said opening is adapted to be cut by said blade means and the fruit falls to the bottom thereof.

3,397,527
PICKUP GUARD MOUNTING MEANS
Otto W. Luek, New Holland, and Robert G. Young, Bird-in-Hand, Pa., assignors to Sperry Rand Corporation, New Holland, Pa., a corporation of Delaware
Filed May 26, 1966, Ser. No. 553,216
3 Claims. (Cl. 56—364)

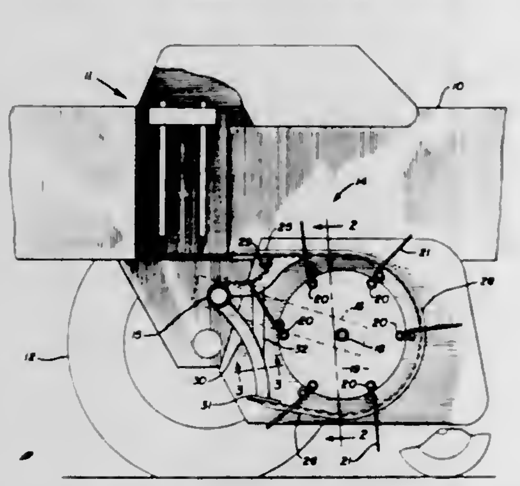

1. A crop pickup comprising a frame having a generally horizontal main frame member, a reel having a plurality of tine bars and a central horizontal axis of rotation, means mounting said reel on said frame along one side of said main frame member with said axis of rotation parallel to said main frame member, said tine bars having radially extending tines thereon whose radially outer ends travel in circuitous paths in parallel vertical planes about said axis of rotation upon rotation of the reel, a plurality of generally U-shaped guards disposed in vertical planes interposed between said planes of travel of said tines, each of said guards having generally parallel upper and lower leg portions spaced apart a distance in excess of the diameter of said reel and integrally interconnected by an arcuate bight portion, said arcuate bight portion extending around the side of said reel diametrically opposite said main frame member and lying radially between said tine bars and said path of travel of said radially outer ends of said tines, said upper and lower leg portions, respectively, extending tangentially from said arcuate bight portion above and below said reel toward said main frame member, a first series of support members respectively disposed in the vertical planes of said guards, said first support members extending from said main frame member toward said reel and upwardly to said upper leg portions of said guards, a second series of support members respectively disposed in the vertical planes of said guards, said second support members extending from said main frame member toward said reel and downwardly to said lower leg portions of said guards, a series of braces respectively disposed in the vertical planes of said guards, each of said braces extending generally vertically between a first and second support member and radially inwardly of said path of travel of said radially outer ends of said tines relative to said axis of rotation of said reel, the portions of said first and second support members disposed between said braces and said guard legs also extending radially inwardly of said path of travel of said radially outer ends of said tines whereby each tine is confined, at all points along its circuitous path, to travel in its particular vertical plane, said second series of support members each being generally V-shaped in cross section with the apex of the V facing toward said reel, and said braces being connected to said second support members substantially on said apexes.

3,397,528
MANUFACTURING A TWO-PLY TWIST YARN
Albert Zermati, 35 Rue de la Faisanderie, 75 Paris 16eme, France
Filed Feb. 20, 1967, Ser. No. 617,392
Claims priority, application France, Oct. 11, 1966, 79,449
7 Claims. (Cl. 57—58.36)

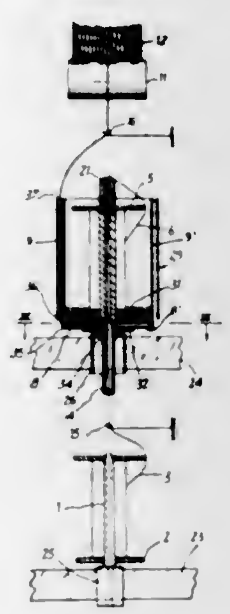

A device for manufacturing a two-ply twist yarn, the said device being constituted by a hollow vertical spindle which carries a bobbin of one of the components and located above a vertical spindle which can also be of hollow construction and which carries a bobbin of the other component, both spindles being driven in rotation in the same direction and at the same speed, the upper spindle being additionally adapted to carry a radial guide, a longitudinal guide, and a yarn-guide disposed above the upper spindle, one of the components being adapted to travel upwards from the lower bobbin into the bore of the upper spindle in which the said component encounters at the level of the radial guide the other component which is travelling downwards from the upper bobbin into the bore of the upper spindle, these two components being then directed together into the radial guide and into the longitudinal guide.

3,397,529
RAIL SPEED CONTROL ARRANGEMENT FOR TEXTILE MACHINES
Horst Wolf, Albershausen, Wurttemberg, Germany, assignor to Zinser-Textilmaschinen Gesellschaft mit beschraenkter Haftung, Ebersbach an der Fils, Germany
Filed Nov. 4, 1966, Ser. No. 592,146
Claims priority, application Germany, Nov. 5, 1965, Z 11,846
21 Claims. (Cl. 57—98)

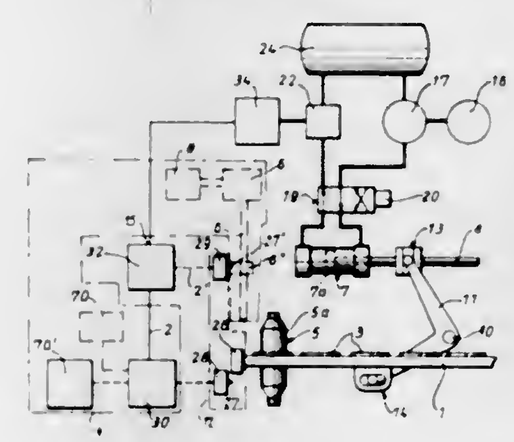

A rail speed control device for textile machines having sensing means for sensing the speed of traverse of the rail means and programming means for correlating the speed of the traverse with a pre-programmed traverse speed. The comparison means controls the speed of the rail traverse by generating one signal if the speed is in excess of a pre-programmed speed and an opposite signal if said speed is less than the pre-programmed speed.

3,397,530
REGULATING DEVICE FOR A TIME MOVEMENT
Francis Besson and Bernard Krebs, La Chaux-de-Fonds, Switzerland, assignors to Girard-Perregaux et Cie. S.A., La Chaux-de-Fonds, Neuchatel, Switzerland
Filed Apr. 3, 1967, Ser. No. 627,848
Claims priority, application Switzerland, Apr. 6, 1966, 5,033/66
12 Claims. (Cl. 58—112)

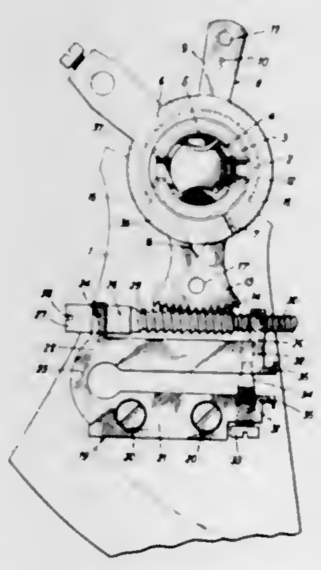

An improved time movement regulating device which permits easy actuation of same to compensate for fast and slow running of the movement in increments in the order of one second per day, by means of an adjustment member in the nature of a worm wheel which has two threaded portions, one of which engages the regulator and pivots same relative to the balance cock, and the other of which causes the adjustment member to move axially as it rotates, whereby the degree of rotation of the regulator is determined by the cumulative effect of the rotation and axial displacement of said adjustment member. The regulator is formed as an elastically deformable member whereby it continuously exerts a force against the adjustment member and serves to thereby lock it against axial play as well as against inadvertent rotation thereof.

3,397,531
BEARING MEANS FOR ARBOR OF A WATCH RUNNER
Jean-Pierre Dubois, Le Locle, Switzerland, assignor to Fabrique d'Horlogerie Chs. Tissot et Fils S.A., Le Locle, Switzerland, a company limited by shares of Switzerland
Filed June 24, 1966, Ser. No. 560,235
Claims priority, application Switzerland, July 1, 1965, 9,177/65
8 Claims. (Cl. 58—140)

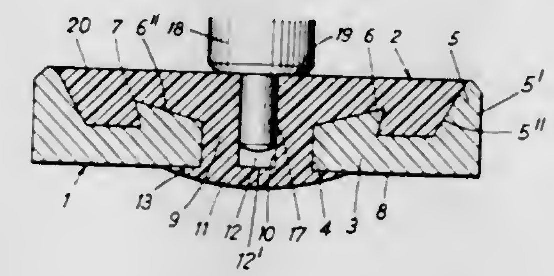

1. A watch runner bearing means comprising a bearing cushion having a blind ended cylindrical cavity therein and an upper outer face portion extending radially from said cavity, an arbor including an axially extending pivot pin and a shoulder extending radially from the base of said pin, said pin extending into said cavity with said shoulder resting against said face portion.

3,397,532
INTERNAL COMBUSTION ENGINE WITH A TURBO-COMPRESSOR
Cornelis Hubers, 30 Molenweg, Rozenburg, Netherlands
Filed Jan. 10, 1966, Ser. No. 519,643
3 Claims. (Cl. 60—13)

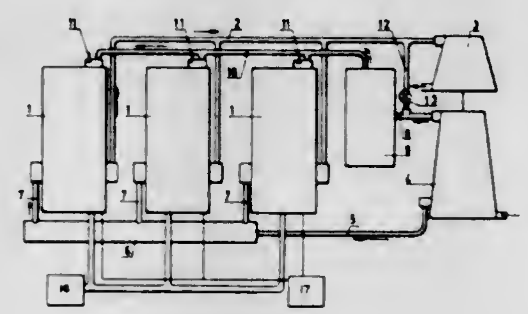

An internal combustion engine provided with a turbocompressor driven by exhaust gases and delivering pressurized air on the order of the maximum combustion pressure of the engine to the cylinders thereof. The pressurized air serves as an extra air source for the engine cylinders and is supplied during the first part of the working stroke of the pistons, the fuel being supplied after the main part of the extra air has been supplied to the chamber. This combination allows the engine power to be increased to such an extent that a maximum combustion pressure is obtained which is comparatively low relative to the average piston pressure, the latter being as high as twice what has been realized in the prior art, thereby resulting in a lighter engine construction achieving the same engine power.

3,397,533
HOT GAS ENGINE CONTROL SYSTEM
John C. Steiner, Warren, and James H. Wolgemuth, Ypsilanti, Mich., assignors to General Motors Corporation, Detroit, Mich., a corporation of Delaware
Filed Oct. 7, 1966, Ser. No. 585,144
8 Claims. (Cl. 60—24)

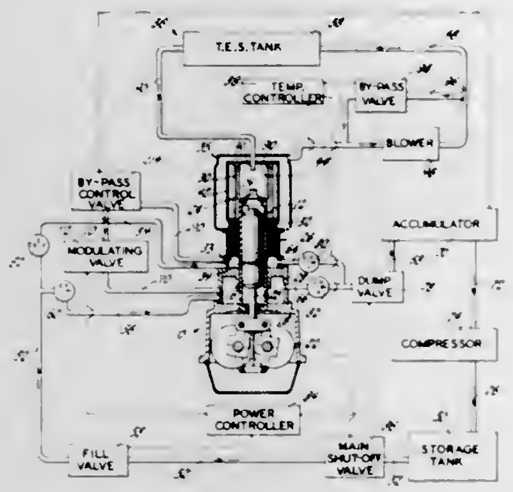

A closed cycle hot gas engine heated by a flow of gas through a thermal energy storage tank to a heat exchanger and having working gas storage means arranged to supply gas to and receive gas from the engine working and buffer chambers. Power is controlled by filling and dumping gas from the engine working chamber. A control system includes means limiting the minimum heater temperature to that at which maximum power is obtained, means limiting the maximum heat exchanger temperature to prevent its failure and means permitting bypassing of gas between the working and buffer chambers to reduce power during the dumping of gas to the gas storage means.

3,397,534
ENGINE SECONDARY AIR INJECTION CONTROL
James Knowles, Bloomfield Hills, Mich., assignor to Ford Motor Company, Dearborn, Mich., a corporation of Delaware
Continuation of application Ser. No. 514,822, Dec. 20, 1965. This application Jan. 17, 1968, Ser. No. 698,666
11 Claims. (Cl. 60—30)

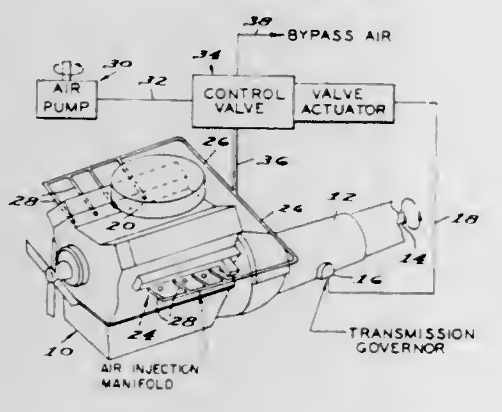

An internal combustion engine has a secondary air manifold supplied with air by an engine driven air pump, the air being directed to the engine exhaust ports for chemical combination with unburned hydrocarbons in the exhaust gas, the air pump discharge flow being diverted from the air manifold above a predetermined vehicle speed by fluid from a vehicle speed responsive governor to reduce the load of driving the air pump and thereby conserving horsepower.

3,397,535
TURBINE PROPULSION-GAS GENERATOR FOR AIRCRAFT AND THE LIKE
Charles Camille Emile Dechaux, 11 Rue Francis de Pressence, Chatenay-Malabry, France
Filed May 9, 1966, Ser. No. 548,590
7 Claims. (Cl. 60—39.5)

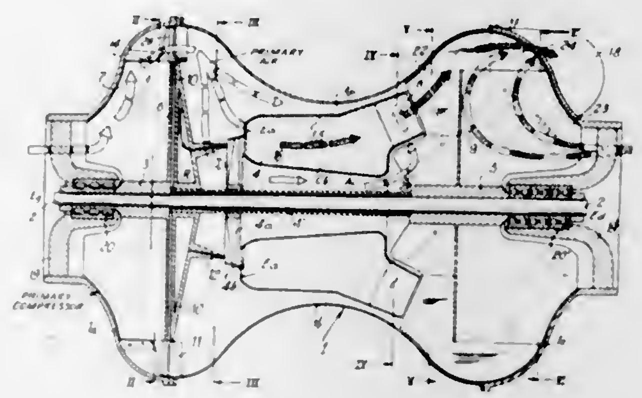

A turbine propulsion-gas generator having an elongated housing enclosing a primary compressor whose flow of primary air is fed to a combustion chamber receiving fuel from an injector, the resulting hot combustion gas being directed at a turbine prior to emergence at an outlet at the periphery of said housing ahead of said turbine, while a secondary compressor induces a flow of secondary air into the housing and outwardly through the outlet, a rotatable partition being disposed in the housing between the turbine and the secondary compressor for limiting interaction between the combustion gas and the secondary air flowing to the outlet means to a peripheral region of the housing.

3,397,536
FUEL NOZZLE ASSEMBLY FOR GAS TURBINE ENGINES OR THE LIKE
David Omri Davies, Leslie Barnes, and Arthur Albert Burrows, Derby, England, assignors to Rolls-Royce Limited, Derby, England, a British company
Filed Oct. 24, 1966, Ser. No. 588,822
Claims priority, application Great Britain, Nov. 1, 1965, 46,218/65
9 Claims. (Cl. 60—39.71)

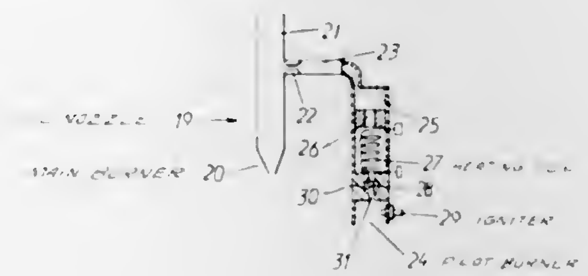

A fuel nozzle assembly has a pre-heating chamber connected to receive a small portion only of the fuel being supplied to the fuel nozzle and a heater is disposed within the pre-heating chamber for vaporizing the fuel. The vaporized fuel passes from the pre-heating chamber to a pilot burner from where it is discharged to a combustion zone adjacent the main burner of the fuel nozzle assembly. A valve prevents the discharge of fuel vapor from the pre-heating chamber except when the pressure in the latter is at least at a predetermined value, thus producing a high pressure flame.

3,397,537
ROCKET INJECTOR HEAD
Charles W. Green, Jr., Jupiter, Fla., assignor to United Aircraft Corporation, East Hartford, Conn., a corporation of Delaware
Filed Sept. 14, 1966, Ser. No. 579,376
10 Claims. (Cl. 60—39.74)

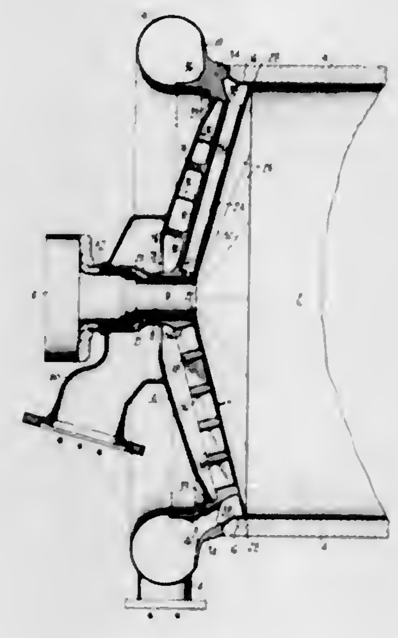

1. An injector head for introducing propellants into a rocket combustion chamber and mixing them therein including:
- (1) a main body portion (**10**), said main body portion being formed from an integral piece comprising:
  - (a) a main annular member (**18**),
  - (b) said main annular member forming an injector face (**24**) on one side and having short spacing members (**30**) extending from the rear thereof,
  - (c) an annular propellant groove (**38**) around said main body portion,
  - (d) passageways (**50**) extending inwardly from said groove (**38**),
  - (e) first orifices (**62**) extending between the passageways (**50**) and face (**24**),
  - (f) webs (**54**) formed between each passageway (**50**),
  - (g) slots (**56**) extending along each web between the rear of the main annular portion (**18**) and a point adjacent the face (**24**),
  - (h) second and third orifices (**58** and **60**) connecting the slots to the face (**24**) of the annular portion (**18**),
- (2) a cooperating plate member (**32**) for providing a flow chamber for one propellant, said cooperating plate member (**32**) having:
  - (a) an outer circular edge fixed to the rear of said main body portion at its outer edge,
  - (b) said cooperating plate member (**32**) also being fixed to the ends of the spacing members (**30**),
- (3) a cooperating manifold portion (**14**) for providing a propellant manifold for a second propellant:
  - (a) said cooperating manifold portion being fixed to the outer edge of the body forming a manifold therewith,
  - (b) a passageway (**40**) connecting said manifold with groove (**38**),
- (4) an annular flat means for cooperating with said main body portion for covering said annular propellant groove (**38**) around the outer edge of the body to form a closed manifold.

3,397,538
MARINE PROPULSION UNIT
Sophia Then and Alojzy Then, both of 1637 Connie Ave., Madison Heights, Mich. 48071
Filed Nov. 16, 1966, Ser. No. 594,797
7 Claims. (Cl. 60—221)

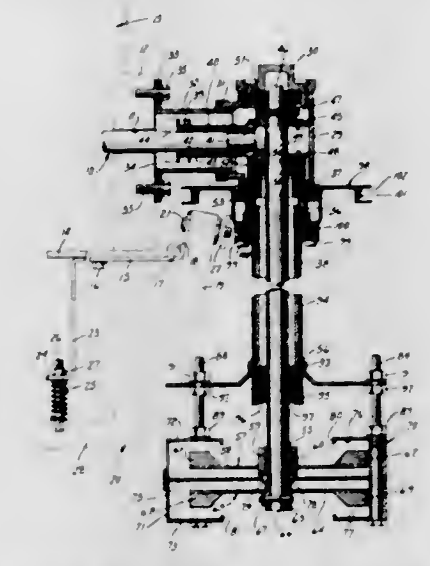

A marine propulsion unit for propelling a boat and which comprises a support housing for mounting the propulsion unit on a boat, a propeller housing rotatably mounted on said support housing and provided with fluid intake means and fluid outlet means, a pair of counter-rotatable propellers mounted in said propeller housing for drawing fluid into the housing through said intake means and discharging the fluid through said outlet means in a jet stream to provide a propelling resultant forward thrust on the boat, means operatively mounted in the support housing for connecting the propellers to a power means in the boat, and, means connected to said propeller housing for rotating the propeller housing from a normal position with the outlet means facing away from the boat to propel the boat forwardly to a position to dispose the outlet means toward the forward end of the boat for reversing the direction of movement of the boat.

3,397,539
SOLID FUEL ROCKET WITH SEPARATE FIRING RATE CHARGE PORTIONS
Johannes Schubert, Munich, Germany, assignor to Bolkow Gesellschaft mit beschrankter Haftung, Ottobrunn, near Munich, Germany
Filed Mar. 10, 1966, Ser. No. 533,573
Claims priority, application Germany, Apr. 7, 1965, B 81,344
7 Claims. (Cl. 60—250)

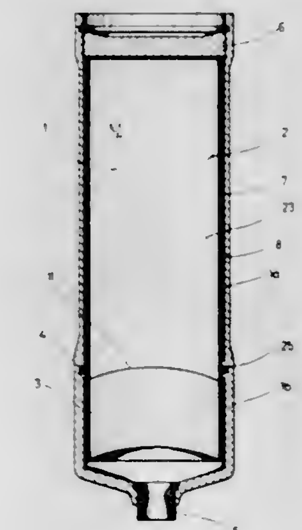

The solid fuel rocket propulsion engine of the invention includes a cylindrical housing or container having a

narrow nozzle section discharge at one end. A solid fuel having charge portions which burn at different rates is mounted in the combustion chamber so that it is spaced inwardly from the interior walls and leaves an empty gas chamber slot around its periphery. The charge advantageously includes a starting or ignition charge portion at the end adjacent the nozzle which will burn off first and a cruising charge portion at the inner end of the combustion chamber.

In accordance with the invention, means are provided for holding the charge in a position such that it is spaced from the interior walls of the combustion chamber, and there is a seal dividing the surrounding slot chamber at a location adjacent the juncture of the individual charge portions. The seal thus divides the surrounding slot chamber into two separate sealed chambers so that each charge portion may ignite and burn in its own sealed chamber while the remaining portion of the combustion chamber is separated therefrom and sealed therefrom so that there will be no return or inward flow of the thrust gases until the charge portion is consumed and the next adjacent charge portion in ignited.

3,397,540
HYBRID ROCKET MOTOR HAVING TURBULATOR-MIXER APPARATUS
Robert R. Scobee, Redlands, Calif., assignor, by mesne assignments, to the United States of America as represented by the Secretary of the Army
Filed Dec. 12, 1966, Ser. No. 602,452
1 Claim. (Cl. 60—251)

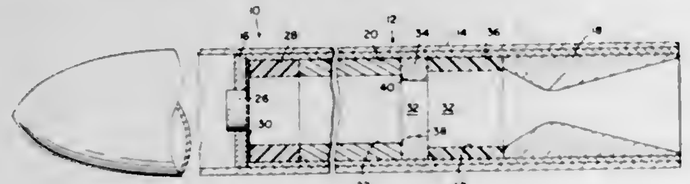

A hybrid reaction motor having a turbulator-mixer apparatus interposed intermediate the aft end of the solid propellant grain and the exhaust nozzle. The turbulator-mixer apparatus includes a turbulator-mixer ring having a restricted central orifice formed therein for acting on the gas streamlines so as to improve the effective mixing and reacting of the gas stream species prior to entry into the thrust nozzle, thereby raising the combustion efficiency of the motor. The apparatus further includes a turbulator-mixer liner disposed immediately between the mouth of the exhaust nozzle and the aft end of the mixer ring.

3,397,541
CONTROL VALVE
Ronald C. Kersh, Orinda, Calif., assignor to Proen Products Co., Berkeley, Calif., a corporation of California
Filed July 28, 1965, Ser. No. 475,376
7 Claims. (Cl. 61—13)

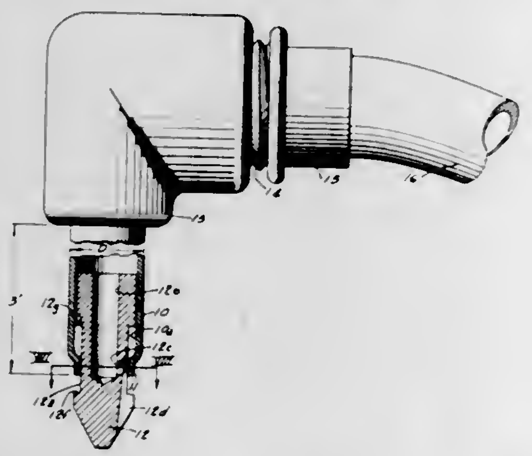

A sub-surface irrigating device comprising an imperforate tube having a slidable, pointed valve core at its lower extremity, the valve core providing axial fluid flow when slid into a telescoped position within the tube and a radial flow when slid into an extended position relative to the tube.

3,397,542
METHOD AND APPARATUS FOR TREATING SOILS
Robert R. Moulden, Jackson, Miss., assignor to Hi Pressure Soil Stabilizers, Inc., Baton Rouge, La., a corporation of Louisiana
Filed Apr. 21, 1964, Ser. No. 361,460
3 Claims. (Cl. 61—36)

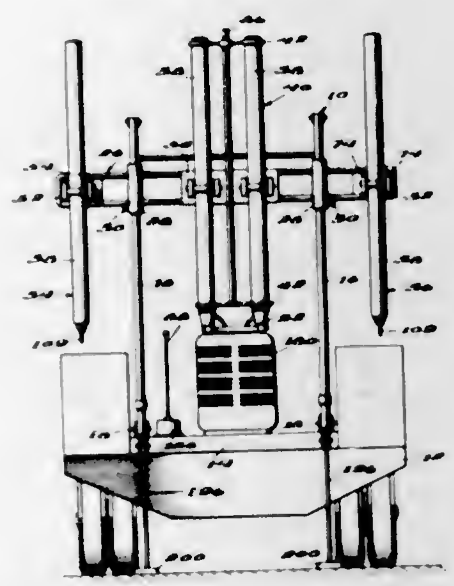

A method of pumping or injecting slurry into soil utilizing injection conduits connected with a vehicle-mounted source of slurry. The vehicle moves from conduit to conduit, pumping slurry through the conduits into the soil.

Prior to the slurry injection operations, the injection conduits were positioned by another conduit-placing vehicle.

3,397,543
MINE ROOF SUPPORT FOR PROGRESSIVE EXPLOITATION
Klaus Spies, Dortmund-Wellinghofen, and Walter Welrich, Dortmund, Germany, assignors, by mesne assignments, to Gewerkschaft Eisenhutte Westfalia, Altlunen, Germany, a corporation of Germany
Filed Aug. 17, 1965, Ser. No. 480,400
Claims priority, application Germany, Aug. 20, 1964, H 53,591
9 Claims. (Cl. 61—45)

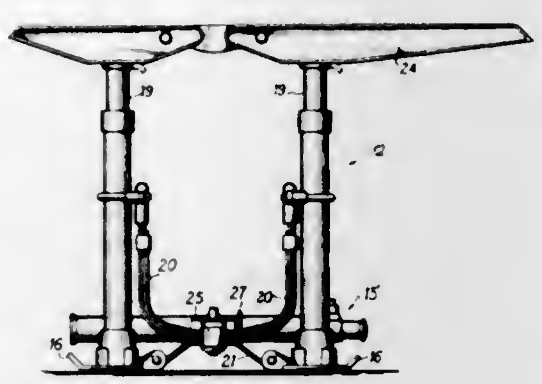

The invention relates to support means for progressive mine exploitation and includes a plurality of upstanding spaced mine roof supporting units associated by longitudinally extending power-operated means positioned between each of the units. The sub-assembly of the units include ground-engaging glide plate support members as well as parallel upstanding spaced prop means extending above the glide plates and cover means on each of the prop means, The prop means also include power means for raising and lowering the props relative to the ground-engaging glide members and spring means are arranged to interconnect the upstanding prop means and the ground-engaging means adjacent to the glide plate support means with a feeler member being carried by the cover member of the intermediate prop to control the advance of the assembly and the mine exploitation.

3,397,544
MINE ROOF SUPPORT
Franz Golla, Altlunen, Willy Watermann, Dortmund-Wambel, and Walter Welrich, Dortmund, Germany, assignors, by mesne assignments, to Gewerkschaft Eisenhutte Westfalia, Altlunen, Germany, a corporation of Germany
Filed Mar. 8, 1966, Ser. No. 532,762
Claims priority, application Germany, Mar. 11, 1965, H 55,434
5 Claims. (Cl. 61—45)

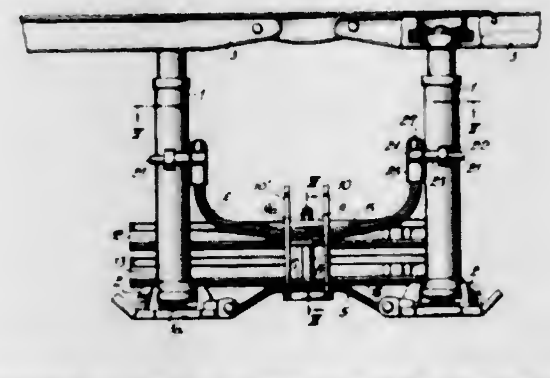

The invention relates to paired mobile mine roof supporting units between each pair of which are positioned two superimposed hydraulic cylinders that are pivotally connected to the units to permit advance of each unit stepwise through a tunnel irrespective of the quality or slope of the terrain.

3,397,545
MARINE STRUCTURE
Clyde M. Leavitt, Pascagoula, Miss., assignor to The Ingalls Shipbuilding Corporation, Pascagoula, Miss.
Filed Oct. 11, 1965, Ser. No. 494,507
15 Claims. (Cl. 61—46.5)

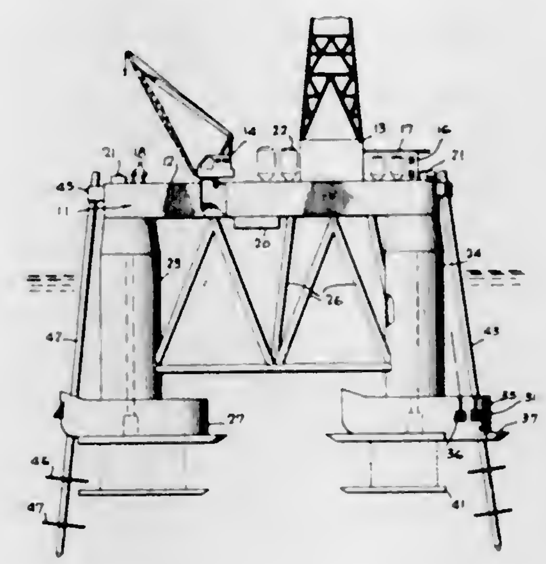

A movable marine structure developed primarily for offshore oil drilling. The structure has been designed so that it may be towed to the oil drilling site and, if desired, anchored at the site or submerged into contact with the ocean floor. The structure has a triangular shape, including at the apices buoyant columns supported on separate boat-shaped footing members, each having damping plates and fins to increase the stability of the structure. The boat-shaped footing members are oriented with one of the members defining a bow of the structure and the two members define a stern. The two stern members each have their longitudinal axes inclined to the center line of the structure to facilitate the towing of the structure.

3,397,546
ROLL OUT-ROLL IN DOCK
Lyle H. Eisert and Walter C. Eisert, both of Crookston, Minn. 56716
Filed Mar. 25, 1966, Ser. No. 537,558
15 Claims. (Cl. 61—48)

A dock or walkway for use adjacent the shoreline of a body of water and which is supported above the body of water comprising a plurality of hinged sections made so that they will not move past a substantially common plane in one direction and which are made so they will hinge in the opposite direction for storage onto a reel. A walkway is initially supported on a float that is pushed out into the water and which supports the walkway above the surface of the water. The inner end of the walkway is then supported adjacent the shoreline, and individual support posts are then placed into the body of water and used to support the walkway sections independently of said float. For storage, the float is installed, the individual support posts are then removed so that the walkway is supported on the float and adjacent the shoreline, and the inner end of the walkway is attached onto a reel, the reel is rotated, and the walkway is wound onto the reel for storage.

3,397,547
AVOIDANCE OF EXPLOSION HAZARDS IN AIR FRACTIONATION BY HALOGENATED HYDROCARBON ADDITION
Ezra Erb, Alden, N.Y., assignor to Union Carbide Corporation, a corporation of New York
Continuation of application Ser. No. 456,140, May 17, 1965. This application Dec. 14, 1967, Ser. No. 690,684
8 Claims. (Cl. 62—20)

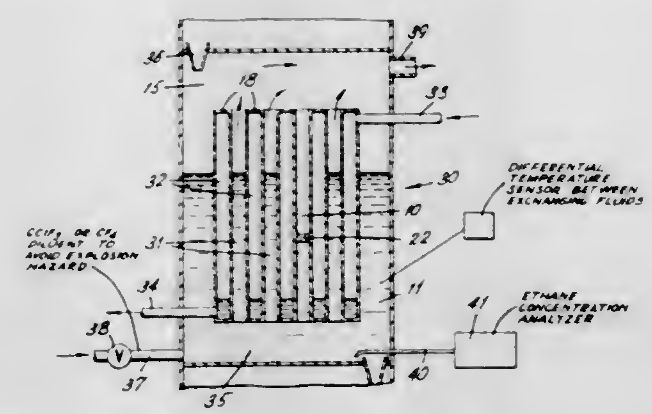

To avoid an explosion hazard resulting from ethane concentration above an obstruction in a passageway for partial vaporization of oxygen-enriched liquid, $CClF_3$ or CF_4 is added to the liquid in concentration below 1000 p.p.m. to eliminate boiling in the ethane concentration zone before the 4 mol percent explosion level is reached.

3,397,548
METHOD FOR SUPPLYING A GASEOUS PRODUCT TO MEET A VARIABLE DEMAND
Sahabettin Ergenc, Zurich, Switzerland, assignor to Sulzer Brothers Limited, Winterthur, Switzerland, a Swiss company
Filed Apr. 20, 1966, Ser. No. 543,823
Claims priority, application Switzerland, Apr. 30, 1965, 6,012/65
1 Claim. (Cl. 62—52)

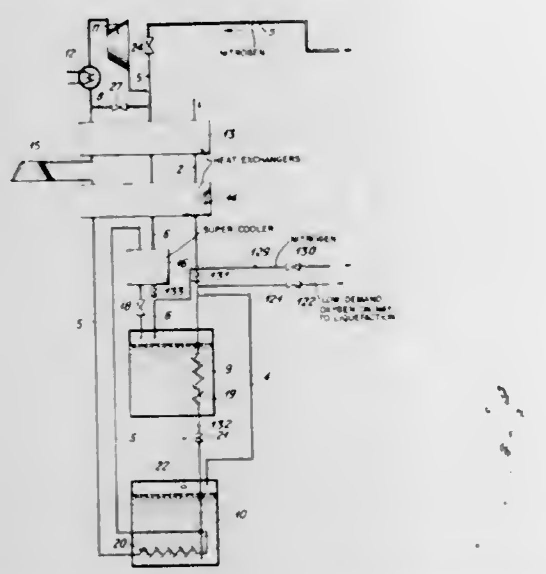

A portion of a first gas obtained from rectification, when not required by a variable user, is liquefied by a liquefied second gas obtained from said rectification step, said second gas being compressed, cooled, work expanded and liquefied, said liquefaction of the second gas being accomplished by heat exchange with liquefied first gas. The liquefied second gas is thereafter throttled and vaporized by passing in heat exchange with condensing first gas after which vaporized second gas is passed in heat exchange with air feed which air feed then passes to said rectification step.

3,397,549
CYCLIC DESORPTION REFRIGERATOR
John G. Daunt, New York, N.Y., assignor to Research Corporation, New York, N.Y., a non-profit corporation of New York
Filed May 29, 1967, Ser. No. 642,025
14 Claims. (Cl. 62—79)

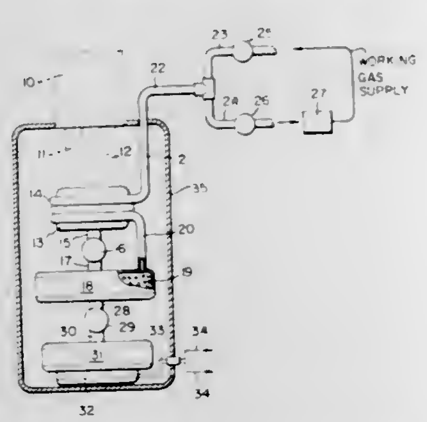

Refrigeration at cryogenic temperatures is effected by cyclically adsorbing a gas, such as helium, on an adsorbent in a thermally isolatable chamber while maintaining heat transfer between the chamber and a heat sink; desorbing the gas while maintaining the chamber in substantial thermal isolation until the temperature in the chamber is substantially below the temperature of the heat sink, continuing to desorb the gas while maintaining heat transfer between the chamber and an object to be refrigerated, and supplying gas to the chamber while maintaining the chamber in substantial thermal isolation until the temperature in the chamber is approximately that of the heat sink. Heat transfer and thermal isolation in the successive stages of the cycle is effected by means of thermal valves or by valved gas conduits.

3,397,550
DEFROST CONTROL MEANS RESPONSIVE TO SPEED OF EVAPORATOR BLOWER
Harry L. Giwosky, Milwaukee, Wis., assignor to Controls Company of America, Melrose Park, Ill., a corporation of Delaware
Filed Apr. 21, 1967, Ser. No. 632,788
12 Claims. (Cl. 62—140)

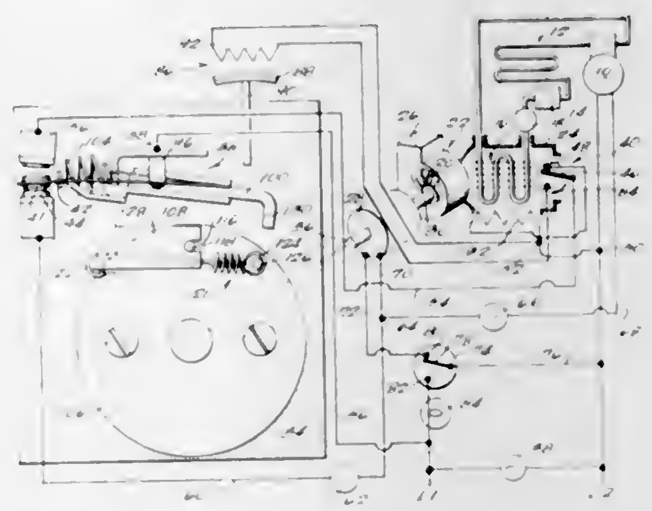

This disclosure is directed to an arrangement for automatically initiating defrost of an evaporator coil in a forced air cooling system on the basis of the speed of the blower motor which causes air flow through the coil. As the refrigeration cycle proceeds, frost accumulates on the evaporator coil and restricts air flow through the coil. This results in a reduction in the air being moved by the blower thereby decreasing the torque load on the motor and causing an increase in the speed of the motor driving the blower. A speed responsive control arrangement senses this increase in motor speed and at a preselected speed, or in other words a control point in the refrigeration cycle, automatically initiates a defrost cycle, the control being further effective to automatically reestablish the refrigeration cycle when defrosting has been completed.

3,397,551
TEMPERATURE CONTROL MEANS FOR REFRIGERATOR
Ralph E. King and Julius B. Horvay, Louisville, Ky., assignors to General Electric Company, a corporation of New York
Filed Dec. 2, 1966, Ser. No. 598,784
2 Claims. (Cl. 62—202)

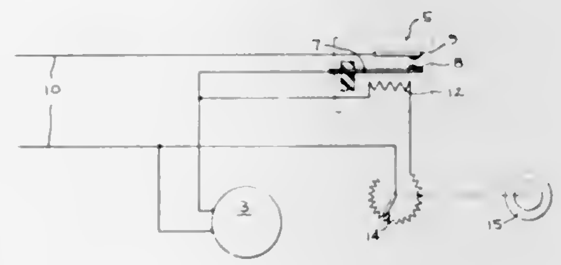

A refrigerator including a compressor-condenser system with bimetal means to control the compressor. A heater in parallel with the compressor and in heat exchange with the bimetal, wherein the heater is energized only when the compressor is on.

3,397,552
REFRIGERATION SYSTEMS
James R. Harnish, Staunton, Va., assignor to Westinghouse Electric Corporation, Pittsburgh, Pa., a corporation of Pennsylvania
Filed July 24, 1967, Ser. No. 655,471
8 Claims. (Cl. 62—202)

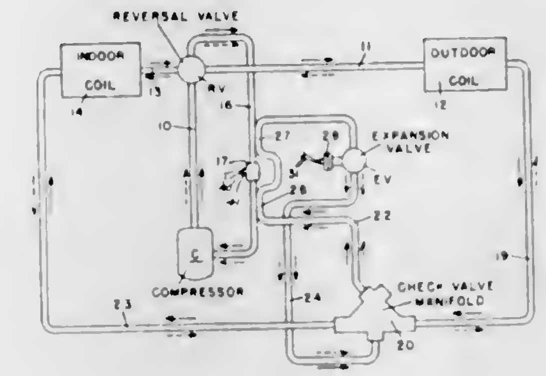

An expansion valve of a refrigeration system has a bimetallic diaphragm connected to its valve piston. A heater resistor is in heat exchange contact with the diaphragm, and is connected electrically in series with a thermistor in the suction gas line of the system to an electric current source. The liquid line of the system is in heat exchange contact with the suction gas line on both sides of the thermistor. The evaporator of the system is overfed so that some refrigerant liquid flows through the suction gas line in contact with the thermistor. When more than a selected quantity of liquid contacts the thermistor, its resistance increases, reducing the current flowing through the heater resistor, causing the diaphragm to warp in a direction to move the valve piston towards closed position, and vice versa. The heat exchange between the liquid line and the suction gas line downstream of the thermistor, evaporates all of the refrigerant liquid flowing past the thermistor, the liquid within the liquid line being subcooled by this heat exchange. The heat exchange between the liquid line and the suction gas line upstream of the thermistor evaporates some of the refrigerant liquid entering the suction gas line, the liquid within the liquid line being further subcooled by this heat exchange.

3,397,553
ICEMAKER INCLUDING IMPROVED SWEEP MEANS
William P. Crowe and David J. Murphy, Jr., Louisville, Ky., assignors to General Electric Company, a corporation of New York
Filed May 15, 1967, Ser. No. 638,327
6 Claims. (Cl. 62—353)

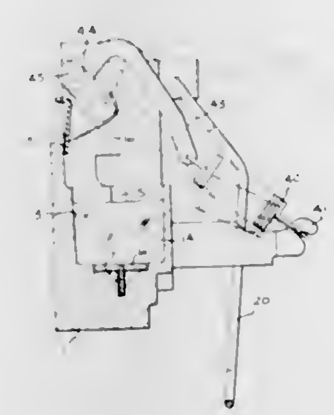

An icemaker of the type comprising ejecting means for raising an ice piece out of a mold cavity and sweep means including energy storing spring means for positive displacement of the ice piece from the mold surface.

3,397,554
DRIVING ARRANGEMENT FOR CIRCULAR KNITTING MACHINES
Carlyle Herbert Wainwright, Leicester, England, assignor to The Bentley Engineering Company Limited, Leicester, England
Filed Aug. 17, 1965, Ser. No. 480,274
Claims priority, application Great Britain, Sept. 15, 1964, 37,570/64
8 Claims. (Cl. 66—56)

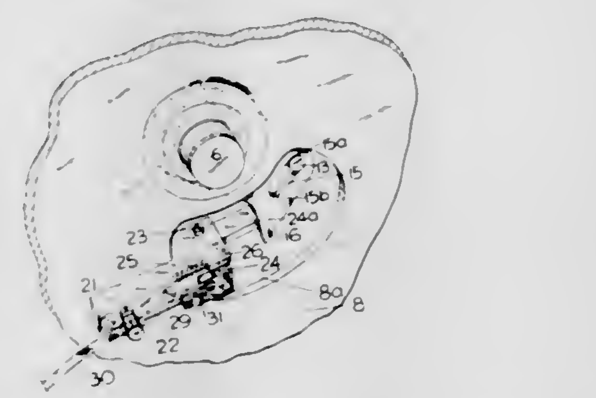

An improved driving arrangement for knitting machines is provided which comprises in combination an oscillating gear or quadrant together with means for oscillating the gear or quadrant and a coupling device whereby the connection of the oscillating means to the driving means may be interrupted and reconnected as and when required. The to and fro motion of the oscillating gear or quadrant is most conveniently provided by mounting cam means on a driven shaft so as to provide free rotation thereon and the coupling is arranged to connect it to and disconnect it from the shaft as and when required.

3,397,555
MACHINE LATCH GUARD
Raymond Blood, Shepshed, and Ernest Start, Ruddington, England, assignors to William Cotton Limited
Filed Aug. 17, 1965, Ser. No. 480,340
Claims priority, application Great Britain, Aug. 20, 1964, 34,018/64
10 Claims. (Cl. 66—88)

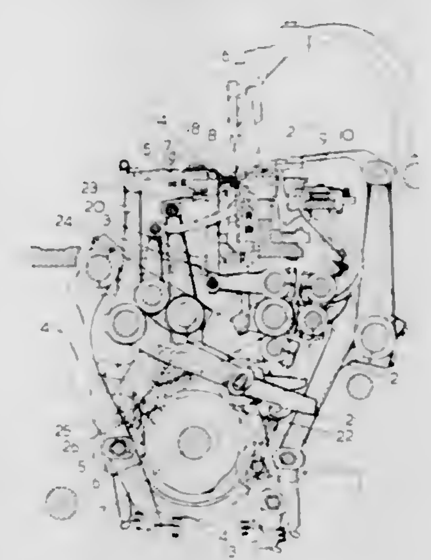

A straight bar knitting machine in which a bar of alternate frame needles and a bar of remaining frame needles are cam operated and selected by control means to operate together for plain knitting and for one bar of frame needles to operate with cam operated and spaced loop spreader machine needles for rib knitting, and having a latch guard for each machine needle to ensure that new yarn kinks fall from the sinkers on to the hook side of the latches, together with means securing the latch guards in fixed relation to the machine needles, such as

by rivetting or securing in the same tricks as the machine needles, and a loop spreader element being also secured such as by rivetting or being integral with the latch guards.

3,397,556
LATCH NEEDLE KNITTING MACHINES
Gillies Wood, Evington, Leicester, England, assignor to The Bentley Engineering Company Limited, Leicester, England
Filed Dec. 22, 1965, Ser. No. 515,552
Claims priority, application Great Britain, Dec. 29, 1964, 52,653/64
7 Claims. (Cl. 66—111)

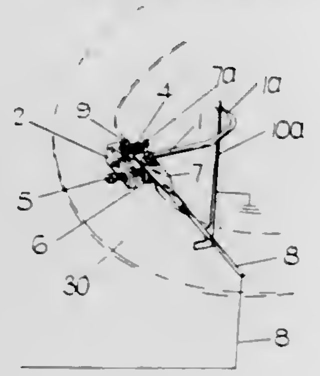

Stop motion apparatus of a latch needle knitting machine including a combination comprising an electrically conducting combined latch opener and detecting device having an insulating mounting, means associated with the said device to produce electrically a machine stop signal when a needle latch is misplaced and means inhibiting the production of such a signal at times when the said device is required to operate as a latch opener without causing stoppage of the machine.

3,397,557
TEXTILE PROCESSING MACHINE
Bernhard Ameling, Coesfeld, Germany, assignor to B. Thies, Coesfeld, Westphalia, Germany
Filed Dec. 19, 1966, Ser. No. 603,068
Claims priority, application Germany, Dec. 17, 1965, T 30,061
10 Claims. (Cl. 68—10)

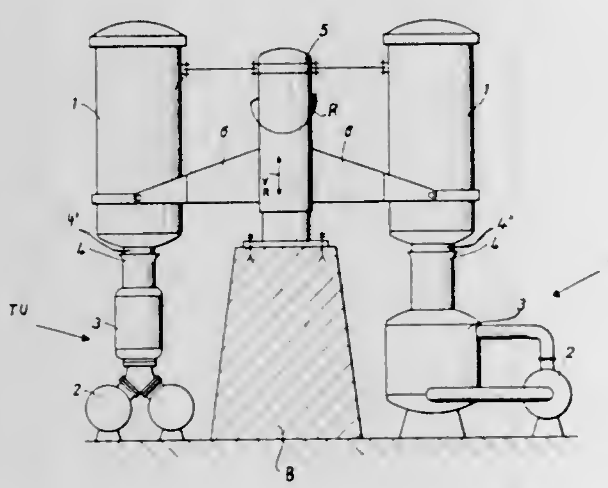

A textile processing machine in which a rotary conveying and indexing device carries one or more containers in which goods to be given successive treatments are to be accommodated. The carrier transports each of these containers in a circular path to a plurality of treating units which are arranged angularly spaced along this path. The conveying and indexing device also successively raises and lowers the respective containers and each of the containers is provided with a male coupling member whereas each of the treating units is provided with a female coupling member, the arrangement being such that when a container is in registry with one of the treating units, it is lowered so that its male coupling member engages the female coupling member on the treating unit.

3,397,558
SELF-BAILING BEAM
Thomas E. Davis, Burlington, N.C., assignor to Burlington Engineering Sales Company, Inc., Graham, N.C., a corporation of North Carolina
Filed July 12, 1966, Ser. No. 564,591
5 Claims. (Cl. 68—198)

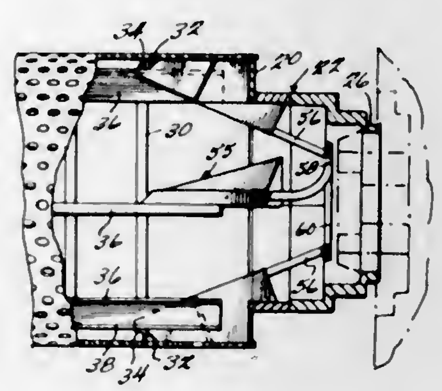

A beam for supporting a textile fabric during the treatment of the fabric with a fluid and during operations for removing or extracting the fluid from the treated fabric wherein the beam is constructed of perforated cylindrical wrapper. At the interior of one end of the wrapper adjacent the axial outlet thereof at least one scoop member is provided which has discharge means communicating with the interior of the wrapper. The outlet of the discharge means opens adjacent the axial outlet of the beam so as to be in fluid communication therewith.

3,397,559
SAFETY DEVICE FOR WIRE RUN-OFF MACHINES
Franz Gerst, Schulstrasse 10, Ihmert, Westphalia, Germany
Filed Sept. 16, 1966, Ser. No. 580,050
Claims priority, application Germany, Sept. 17, 1965, G 44,707
2 Claims. (Cl. 72—5)

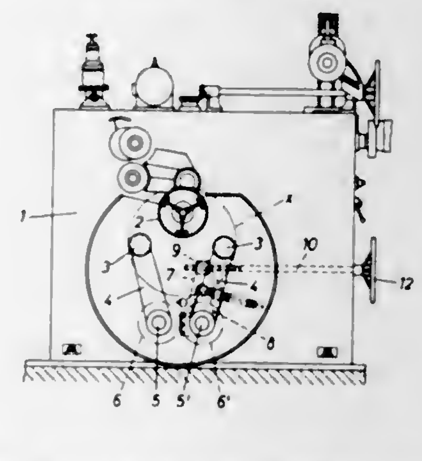

1. A safety device for wire run-off machines comprising
a machine body,
a wire run-off drum,
at least two supporting rollers disposed below said wire run-off drum,
two first levers carrying the corresponding of said supporting rollers,
means for swinging said first levers forcibly toward each other,
said wire run-off drum and said supporting rollers being disposed in said machine body and adapted to carry a wire ring,

a shaft provided for each of said two first levers,
two second levers disposed in succession on one of said shafts,
one of said second levers being keyed to said one of said shafts,
the other of said second levers being rotatably mounted on said shaft,
a setting spindle operatively mounted on said machine frame and pivotally connected with said other of said second levers,
each of said second levers having a switch contact such, that upon engagement of said switch contacts a motor circuit is opened and said switch contacts being adapted to stop a wire working device pulling said wire from said drum,
a pivot member secured to each of said second levers,
a draw bolt having one end thereof attached to said pivot member secured to said one of said second levers, and extending freely through said pivot member secured to the other of said second levers, and
spring means surrounding said draw bolt and tending to move said last mentioned pivot member toward said first mentioned pivot member.

3,397,560
METHOD OF HOT EXTRUSION OF METALS AND ALLOYS ON SLOWLY OPERATED PRESSES
Robert A. Kaprelian, Buffalo, N.Y., assignor to Compagnie du Filage des Metaux et des Joints Curty, Paris, France
Filed June 8, 1966, Ser. No. 556,131
Claims priority, application France, June 15, 1965, 20,803
1 Claim. (Cl. 72—41)

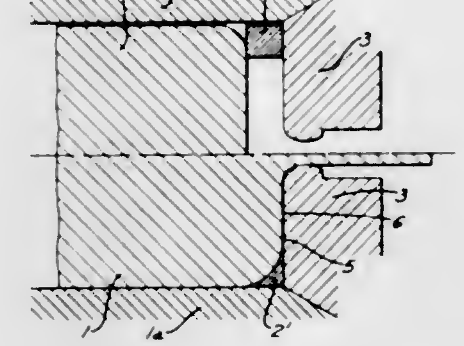

1. In hot extrusion of metals and alloys on a slowly operating press, the invention comprises forming a ring of agglomerated lubricating powder having the same outside diameter as the billet and such a volume that after upsetting it becomes substantially trapped between the lateral surface of the container, the entrance face of the die and the previously rounded or chamfered portion of the billet, placing the ring against the entrance face of the die, introducing the billet and proceeding the extrusion.

3,397,561
ALUMINUM WALL PANEL AND METHOD OF MAKING SAME
Dale J. Youssi, Dover, Ohio, assignor to Alsco, Inc., Akron, Ohio, a corporation of Delaware
Filed Jan. 7, 1966, Ser. No. 519,320
5 Claims. (Cl. 72—43)

A method of producing aluminum wall panels which are coated with dielectric material except along longitudinally extending strips. The dielectric free strips are located such that they are in interfacial contact with similar strips on adjacent panels when the panels are installed on a building, thereby establishing electrical connection between all of the panels on the wall of a building. The entire aluminum panel is first treated with an acidic solution containing fluorine bearing compounds and hexavalent chromium to provide an electrically conductive base coating. A dielectric coating is then applied over this base coating with a longitudinal strip left uncoated on each side of the panel. The dielectric free strips are then coated with an electri-

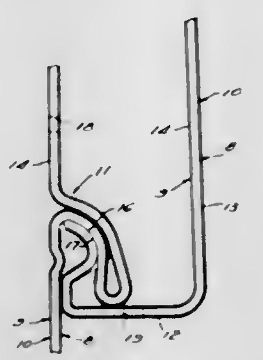

cally conductive lubricating oil thinned with a volatile solvent. The panel thus coated subsequently passes through forming rolls which produce the desired cross section of the panel so that when the panels are installed on a building the oil coated dielectric free strips on adjacent panels are in interfacial contact with one another.

3,397,562
METHOD AND APPARATUS FOR THE EXTRUSION OF METAL TUBES AND BILLETS BY AN INITIAL IMPULSIVE FORCE AND THE SUBSEQUENT APPLICATION OF UNIFORM EXTRUSION FORCES
Francis J. Fuchs, Jr., Princeton Junction, N.J., assignor to Western Electric Company, Incorporated, New York, N.Y., a corporation of New York
Filed Apr. 8, 1966, Ser. No. 541,323
16 Claims. (Cl. 72—54)

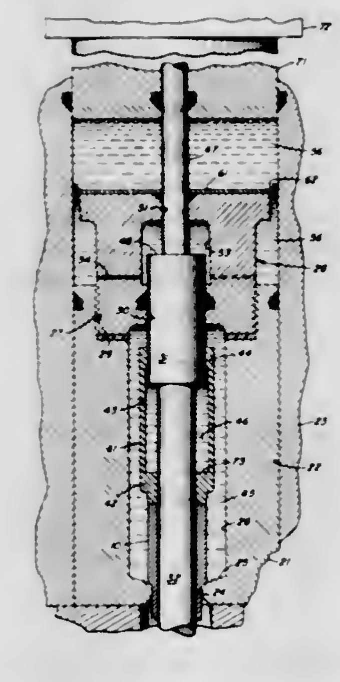

15. The method of extruding a billet, comprising the steps of:
generating a force from a single source sufficiently great to both extrude said billet through a die and to overcome static friction between said billet and said die,
applying said force suddenly to said billet to overcome said friction and to initiate extrusion of said billet through said die, and
thereafter, controlling said force applied to said billet at a substantially constant level sufficient to continue to extrude said billet through said die.

3,397,563
APPARATUS FOR EXPANDING AND FORMING TUBULAR WORKPIECES
Clyde I. Pelton, Warren, Ohio, assignor to The Taylor-Winfield Corporation, Warren, Ohio, a corporation of Ohio
Filed Apr. 20, 1966, Ser. No. 544,006
7 Claims. (Cl. 72—62)

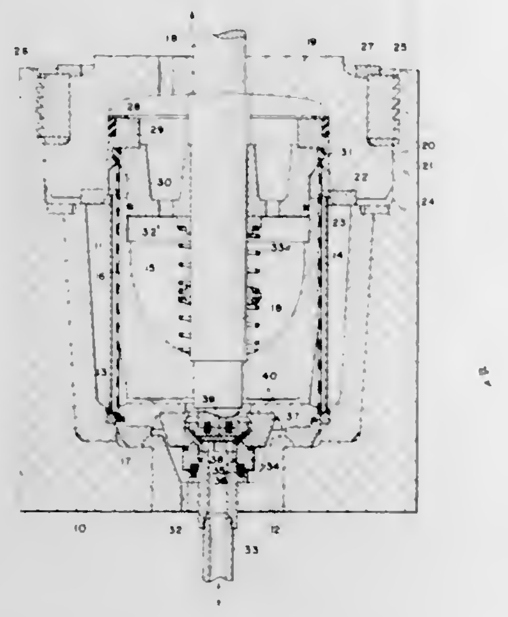

Apparatus for forming cylindrical or tubular sheet metal objects by means of a forming die open at one axial end for movement therethrough of a workpiece and expanding mechanism, in loading and unloading, which mechanism comprises telescoping piston-like members closely surrounded by a stretchable sleeve which is radially expandable by the introduction, through one of said members, of fluid under pressure so as to force the tubular sheet metal object against the die. The ends of the sleeve are attached to said piston-like members and spring means are enclosed thereby for yieldably spreading said telescoping members apart to make said stretchable member taut after expansion.

3,397,564
EXPANDING PIPES
Otto Schroeder, 1801 1st St., Napa, Calif. 94558
Filed Sept. 13, 1965, Ser. No. 486,750
41 Claims. (Cl. 72—113)

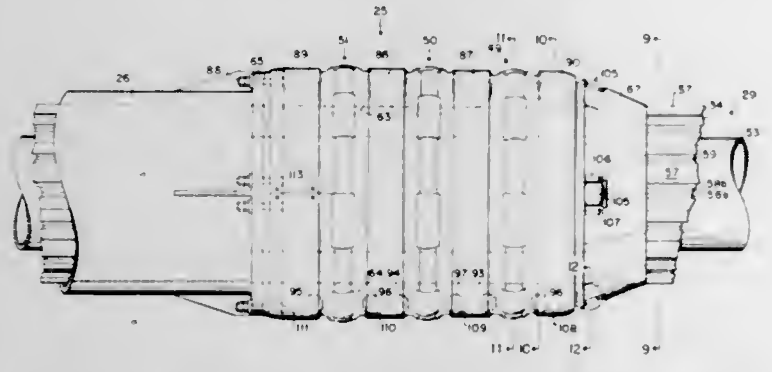

Pipe is expanded by moving longitudinally therethrough an expansion head having one or more rings of expansion rollers with convex outer surfaces and mounted on axes positioned at right angles to and offset outwardly from the central longitudinal axis for engaging the pipe. The ring of expansion rollers includes, in circumferential alternation, rollers of different diameters, the ends of the smaller rollers being partly nested within hollowed ends of the larger rollers to provide a substantially continuous circumferential expanding surface. Means, such as a central mandrel which engaged the inner faces of some expansion rollers, and/or a frame formed from journal axles for the rollers, resists inward movements of the rollers. Each expansion roller can comprise separately rotatable sections on a common axis for rotations at different angular speeds depending on the diameters of the sections. A ring of burnishing rollers at the rear end of the head limits elastic contraction of the expanded pipe and facilitates re-entry of the head into the pipe after withdrawal at the far end. Smaller buffer rollers transmit longitudinal stress to the expansion rollers and prevent their radially outward movement.

3,397,565
APPARATUS FOR SUPPLYING BENDABLE STRIP MATERIAL
Josef Ritter, Graz-Kroisbach, and Hans Gött, Graz, Austria, assignors to AVI Alpenlandische Veredelungs-Industrie Gesellschaft m.b.H., Graz, Austria, a corporation of Austria
Filed Nov. 29, 1965, Ser. No. 510,215
Claims priority, application Austria, Dec. 1, 1964, A 10,160/64
6 Claims. (Cl. 72—129)

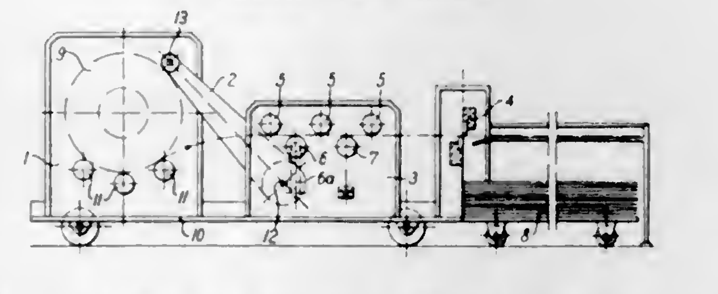

An apparatus for supplying bendable metallic strip material for reinforcement of concrete has a roll from which the material is unwound and then straightened by straightening rollers; one or more of the rollers are driven; a feeler lever senses the diameter of the wound material and changes its position accordingly and thereby alters the position of one of the straightening rollers relative to that of the others.

3,397,566
METHOD FOR PROVIDING METALLIC STRIP OF UNIFORM THICKNESS AND FLATNESS
Nick Trbovich, East Chicago, Ind., assignor to Inland Steel Company, Chicago, Ill., a corporation of Delaware
Filed Oct. 22, 1965, Ser. No. 502,173
2 Claims. (Cl. 72—365)

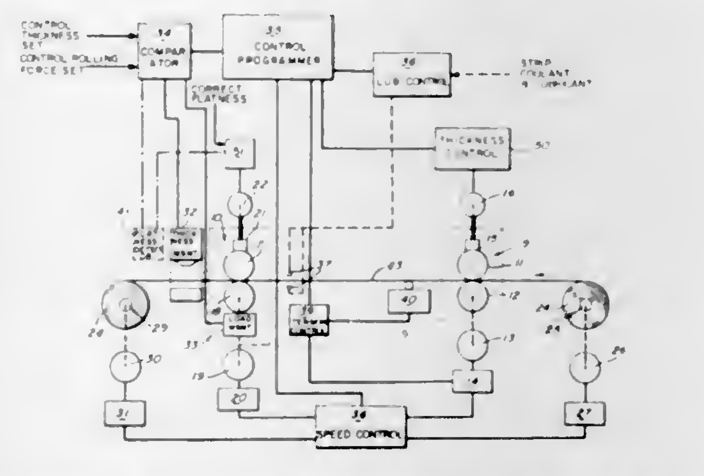

A method for rolling metallic strip of uniform flatness and desired thickness at a given roll stand. Correct for deviations from desired thickness solely by varying the conditions which influence the plastic flow line of the strip. Correct for deviations from uniform flatness solely by adjusting the roll stand to that setting which gives uniform flatness at the desired thickness, and maintain the roll stand at that setting for as long as uniform flatness at the desired thickness can be obtained with that setting.

3,397,567
ELECTRIC HANDTOOL OR PRESS
Martin Luther Klinger, Hershey, Pa., assignor to AMP Incorporated, Harrisburg, Pa.
Continuation-in-part of application Ser. No. 380,398, July 6, 1964. This application May 11, 1966, Ser. No. 549,292
6 Claims. (Cl. 72—416)

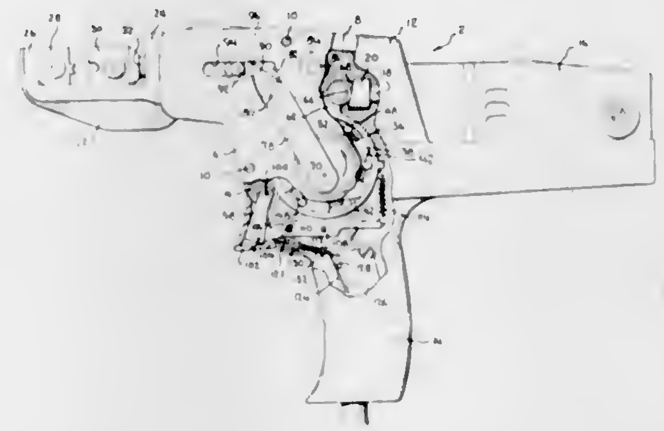

1. A power operated tool comprising a pair of circular ratchet assemblies in side-by-side relationship on a common axis, said ratchet assemblies comprising a pair of cylindrical driving members and a cylindrical driven member, said driving members being rotatable in either direction with respect to said axis and said driven member being rotatable in only one direction in unison with either of said driving members, a power shaft rotatable at a relatively high speed, camming means effective between said power shaft and said driving members to oscillate said driving members in out-of-phase relationship thereby to rotate said driven member about said axis in said one direction, a reciprocable ram, and motion translating means for translating the rotary motion of said driven member into reciprocable motion in said ram.

3,397,568
HYDRAULIC FORGING PRESS
Hans-Joachim Pahnke, Dusseldorf-Nord, Germany, assignor to Maschinenfabrik Sack G.m.b.H., Dusseldorf-Rath, Germany
Filed Aug. 23, 1966, Ser. No. 574,420
Claims priority, application Germany, Aug. 25, 1965, M 66,438
10 Claims. (Cl. 72—453)

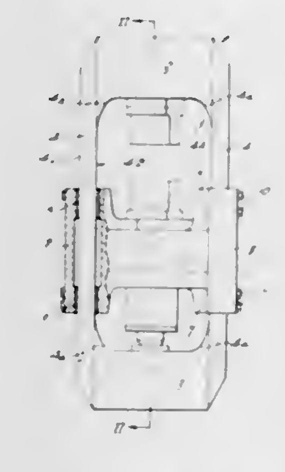

1. In a hydraulic forging press, a floor-supported traverse; a box-shaped one-piece frame disposed in a vertical plane and comprising spaced upper and lower crossheads and two spaced columns extending between said crossheads at the opposite sides of said traverse, the cross-section of each of said columns resembling a rectangle bounded by pairs of longer and shorter sides and one pair of said sides extending transversely of said vertical plane, the width of said traverse being substantially equal to the distance between said columns and said traverse comprising a pair of integral first guide members each adjacent to one of said columns; a substantially U-shaped second guide member adjacent to each of said first guide members and defining therewith a vertical channel for the respective column; fastener means securing said second guide members to the respective first guide members; and reciprocating means including a cylinder and piston unit operating between said traverse and one of said crossheads for moving the frame with reference to said traverse whereby said columns slide in the respective channels.

3,397,569
FURNACE AND BURNER FOR TESTING TEMPERATURE PROBES
Ralph E. Baldwin, Indianapolis, Ind., assignor to General Motors Corporation, Detroit, Mich., a corporation of Delaware
Filed Oct. 22, 1965, Ser. No. 501,681
6 Claims. (Cl. 73—1)

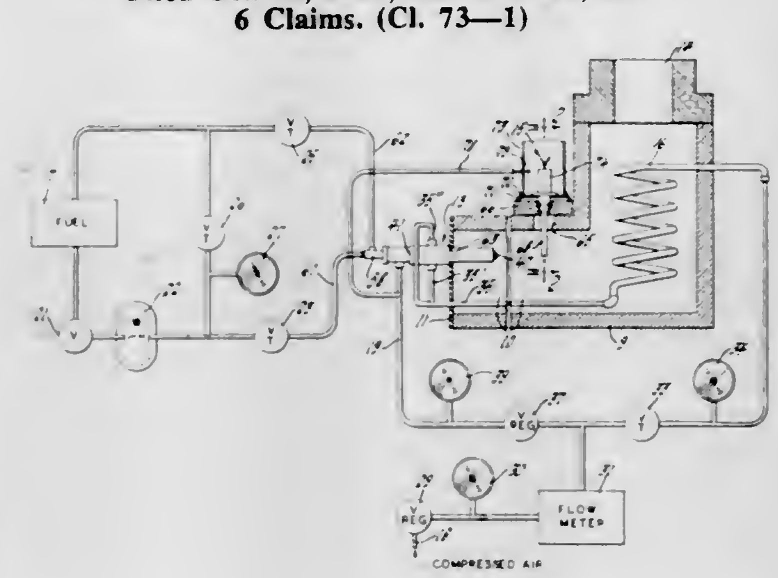

A furnace for testing thermocouples at very high temperatures under simulated operating conditions includes a kiln fired by oil fuel of the sort used in gas turbines. A very hot flame is achieved by supplying combustion air to the nozzle through a heater in the path of the flame downstream of the thermocouple. Fuel entering the nozzle is cooled by a return conduit for excess fuel and a conduit for cool compressed air disposed between the fuel entry pipe and the hot air duct. Cool air is circulated around the parts of the thermocouple remote from the temperature sensing tip.

3,397,570
UNIDIRECTIONAL METER PROVER
Raymond H. Pfrehm, Houston, Tex., assignor to Esso Research and Engineering Company
Filed June 13, 1966, Ser. No. 557,249
8 Claims. (Cl. 73—3)

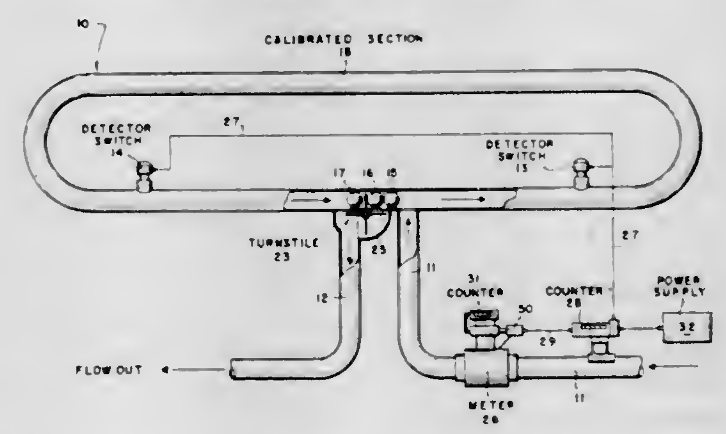

A unidirectional loop-type meter prover system eliminating valves between the inlet and outlet is provided

by using a plurality of sealing members one of which forms a seal between the inlet and outlet while another one of the sealing members is traveling between spaced apart detection points.

3,397,571
METHOD FOR THE CONTINUOUS MEASUREMENT OF PLASTICITY OF RUBBER MIXTURES IN A MIXING MILL
Volker Härtel, Isegrimstrasse 27, Lubeck-Eichholz, Germany
Filed Oct. 7, 1965, Ser. No. 493,751
Claims priority, application Germany, Oct. 8, 1964, G 41,734
2 Claims. (Cl. 73—54)

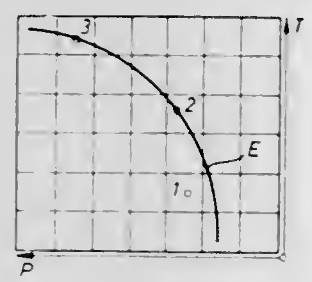

A process for measuring the plasticity of a rubber blend in a mixing mill in which values of plasticity and temperature of the blend are concurrently measured and projected as separate intersecting lines onto a two-dimensional coordinate system which contains a calibration curve of thermoplasticity which relates plasticity and temperature for the considered rubber blend, thereby enabling treatment in said mill for coordinating the plasticity and temperature values of the blend such that the intersecting point of the intersecting lines is moved to a discrete point on the calibration curve.

3,397,572
DEVICE FOR MEASURING STRESS-STRAIN CURVE
Walter A. Stolz, deceased, late of Arlington, Va., by Mary Ann Lynott Stolz, administratrix, 1368 N. Washington Ave., Scranton, Pa. 18509, and Joseph M. Krafft, 1709 Oakcrest Drive, Alexandria, Va. 22302, and Frank W. Bird, 7204 Alger Road, Falls Church, Va. 22042
Filed Mar. 1, 1966, Ser. No. 532,551
9 Claims. (Cl. 73—94)

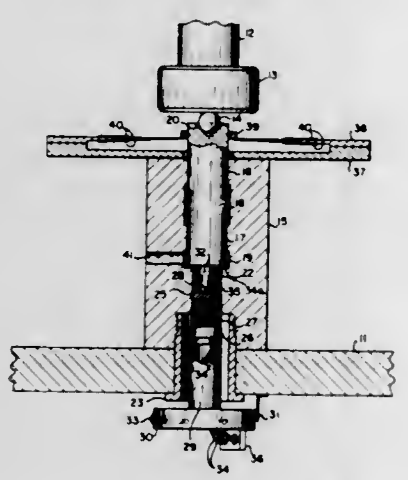

The present invention is directed to an apparatus for dividing the deforming stroke of a compression subassembly into a series of abruptly interrupted steps. A rigid cylindrical case is secured to the base of a high-strain-rate testing machine. With a sliding fit therein, a coaxial plunger is connected to the movable head of the loader. The plunger can be driven by the machine into solid abutment with the bottom of the case. This bottom is penetrated in its central region by a coaxially threaded base anvil supporting a cylindrical compression specimen. A graduated dial on the threaded anvil permits control of the extent of its protrusion above the stop. The testing machine head, first withdrawn to permit its protrusion to a portion of the total stroke, is actuated to squash the plug flush with the bottom. This procedure is repeated in steps.

3,397,573
OCEANOGRAPHIC APPARATUS
Howard J. Carter, 2149 Anniversary Lane, Newport Beach, Calif. 92660
Filed Oct. 23, 1965, Ser. No. 502,964
13 Claims. (Cl. 73—170)

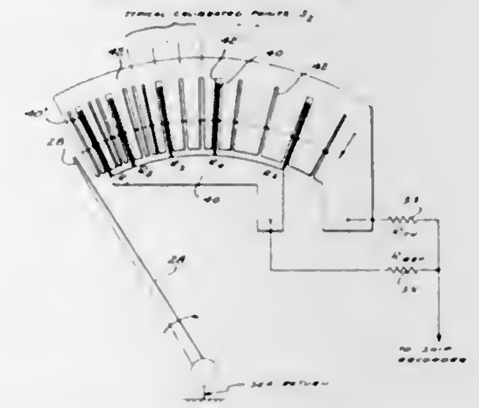

An oceanographic apparatus for sensing and measuring temperature and depth in which a single telemetering signal is modulated as to amplitude in accordance with the sensed temperature and is interrupted to form pulses in accordance with the measured depth.

3,397,574
FLOAT FOR MEASURING WAVE CHARACTERISTICS AND DIRECTION
Herman A. Soulant, Rockville, Md., assignor to the United States of America as represented by the Secretary of the Navy
Continuation-in-part of application Ser. No. 491,469, Sept. 29, 1965. This application Nov. 14, 1967, Ser. No. 682,840
21 Claims. (Cl. 73—170)

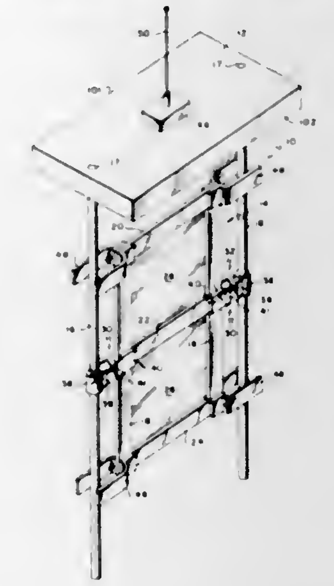

This disclosure relates to a buoy for measuring wave characteristics. The float member moves with the surface of the wave while the tender member remains relatively stationary. The oscillatory motion between the float member and the tender member is sensed for subsequent determination of wave direction, height, period, velocity, slope and acceleration. A magnetic sensing means is utilized to indicate the magnetic direction of the wave relative to the earth.

3,397,575
MAGNETIC FLOWMETER
Donald L. Ham, Northampton, Pa., assignor to Fischer & Porter Company, Warminster, Pa., a corporation of Pennsylvania
Filed Feb. 17, 1965, Ser. No. 433,397
1 Claim. (Cl. 73—194)

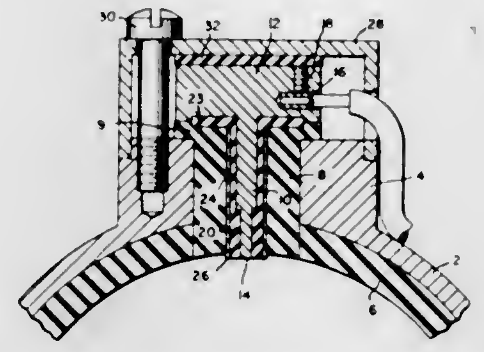

A magnetic flowmeter comprising a conduit passing a liquid through a magnetic field is provided with a pair of sensing electrodes arranged perpendicularly to the direction of flow and to the direction of the magnetic field. Each electrode is surrounded by a conductive annulus insulated from the electrode and unconnected to the sensing circuitry so that each annulus is free to assume its own potential.

3,397,576
LIQUID METERING SYSTEMS
Robert L. Peres, Neuilly-sur-Seine, France, assignor to The Associated Octel Company Limited, London, England, and Octel S.A., Paris, France
Filed Feb. 7, 1966, Ser. No. 525,661
Claims priority, application Great Britain, June 11, 1965, 24,799/65
4 Claims. (Cl. 73—200)

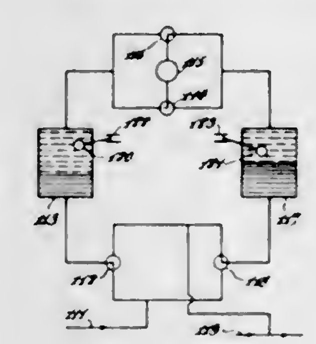

A liquid metering system employing two reservoirs connected through a meter for transfer of a first liquid from one to the other with valve means for alternately supplying a second liquid to the reservoirs to cause displacement of a given metered amount of the first liquid from one reservoir to the other and for discharging the same amount of the second liquid from the other reservoir with valve means for always directing the transferred liquid in the same direction through the meter in the connection between the reservoirs.

3,397,577
APPARATUS FOR INDICATING THE FILLED STATE IN LIQUID GAS CYLINDERS
Hans Siebert, 1 Siebertweg, Kassel-Wilhelmshoehe, Germany
Filed Sept. 8, 1965, Ser. No. 485,789
Claims priority, application Germany, Dec. 23, 1964, S 94,803
9 Claims. (Cl. 73—309)

A liquid level indicating device having a resilient and elongated float member supported at the bottom of a container and adapted to rise and descend a predetermined distance under the influence of level changes, the

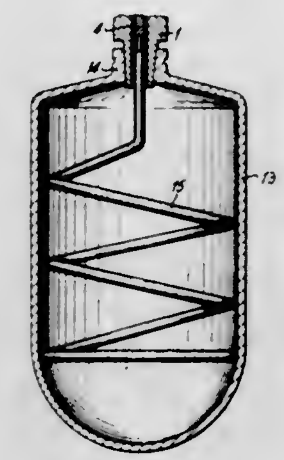

indicating rod portion of the float arranged in the upper portion of the container.

3,397,578
MOTION AMPLIFYING MECHANISM FOR PRESSURE RESPONSIVE INSTRUMENT MOVEMENT
Harvey A. Klumb, Pittsford, N.Y., assignor to Taylor Instrument Companies, Rochester, N.Y., a corporation of New York
Original application Apr. 3, 1963, Ser. No. 270,311, now Patent No. 3,232,183, dated Feb. 1, 1966. Divided and this application Sept. 27, 1965, Ser. No. 508,180
4 Claims. (Cl. 73—386)

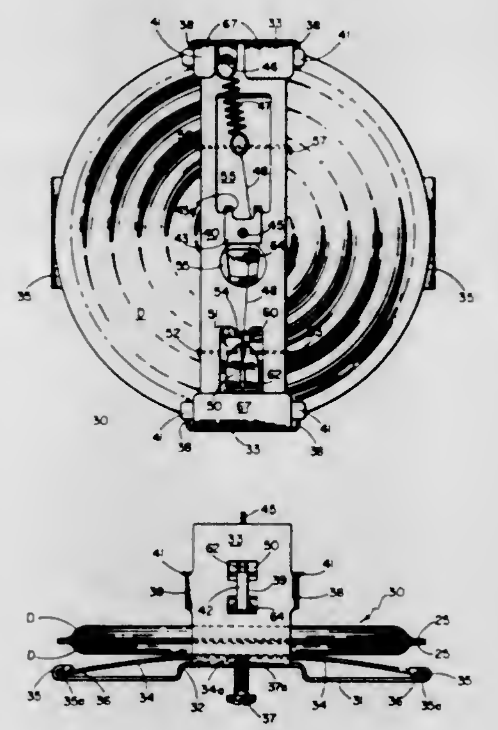

1. In a pressure responsive instrument having a pressure responsive chamber including a wall portion movable in response to change in fluid pressure thereon, the improvement comprising a plate means and a leaf spring; wing means on said plate means, said wing means being spaced apart in order to accommodate the length of said leaf spring; said leaf spring being held between said wing means with its said length running between said wing means; one end of said leaf spring being held in substantially fixed position between said plate means and one of said wing means, and the other end thereof being held in substantially fixed position between said plate means and the other of said wing means; said pressure

responsive chamber being mounted on the intermediate portion of said leaf spring substantially equidistant from each said end, and adjustable means movable in such direction into engagement with said leaf spring at said portion as to force the said intermediate portion of said leaf spring away from the plate means; said wing means being in the form of a pair of troughed members each having a trough positioned to receive the ends of said spring leaf, one side of each said trough overlying a said end and the next adjacent surface portion of said plate means.

3,397,579
THERMOCOUPLE GAUGE CONTROL
Philip C. Harvey, Bedford, Mass., assignor to National Research Corporation, Newton Highlands, Mass., a corporation of Massachusetts
Filed Jan. 27, 1966, Ser. No. 523,381
2 Claims. (Cl. 73—399)

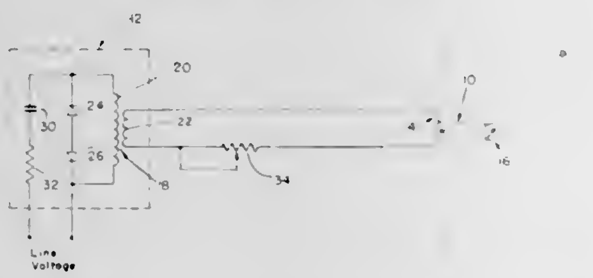

Thermocouple gauge control with inexpensive line voltage regulator comprising opposed Zener diodes and reactive impedance for limiting current. The control also comprises a circuit arrangement of the thermocouple which allows the DC voltage output of the thermocouple junction to be applied to the meter while limiting the AC power supply voltage which can be applied to the meter.

3,397,580
PRESSURE RATIO TRANSDUCER
Michael A. D'Ambrosio, Port Chester, N.Y., assignor to United Aircraft Corporation, East Hartford, Conn., a corporation of Delaware
Filed Sept. 9, 1965, Ser. No. 486,114
5 Claims. (Cl. 73—407)

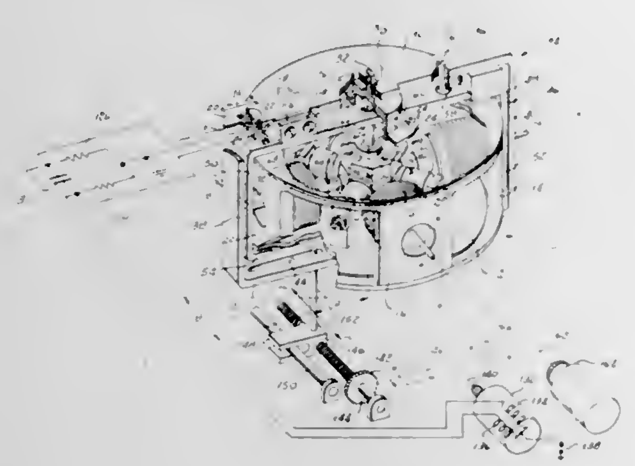

A pressure ratio transducer in which forces are applied to a lever along orthogonal axes at a point spaced from a lever pivot carried by an arm rotatably mounted on a support by a pivot spaced from the first pivot. In response to a displacement of the lever from a position at which it is aligned with the arm, drive means comprising a member moving linearly along a straight line located at a constant distance from the arm axis moves the arm to a posiiton at which the lever and the arm are aligned.

3,397,581
RANGE SWITCHING FOR PRESSURE GAUGE
James Bush, Palm Beach, Fla., assignor to Marine International, Inc., Arlington, Va., a corporation of Delaware
Filed Feb. 11, 1966, Ser. No. 526,801
10 Claims. (Cl. 73—407)

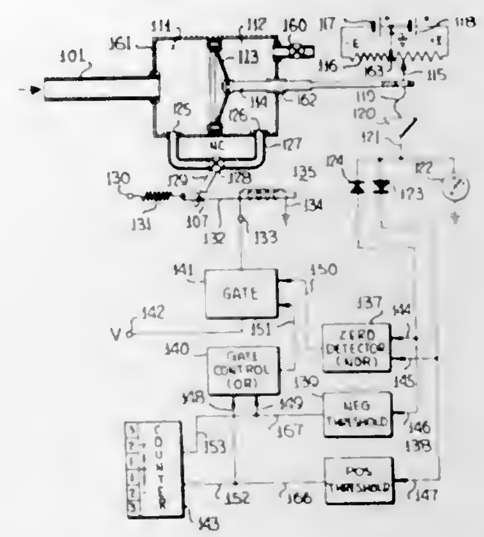

There is provided a pressure meter having means for extending the range of the meter over that which would be normally expected. The meter includes two chambers with a pressure to be measured applied to one chamber. Differential in pressure between the chambers is measured. When the differential approaches or equals the maximum pressure of the indicating device the pressure in the two chambers is equalized, and thereafter pressure readings are again taken with the deflection at the time of equalization being added to the now-current reading. Equalization may be done manually or automatically. Where done automatically, an up-down counter is employed to determine the change in the scale factor necessary to achieve proper pressure reading.

3,397,582
MATERIAL SAMPLING APPARATUS
Erling K. Strand, deceased, late of Bloomington, Minn., by Edna E. Strand, executrix, 2336 Wellswood Curve, Bloomington, Minn. 55431
Filed Feb. 17, 1966, Ser. No. 528,316
10 Claims. (Cl. 73—423)

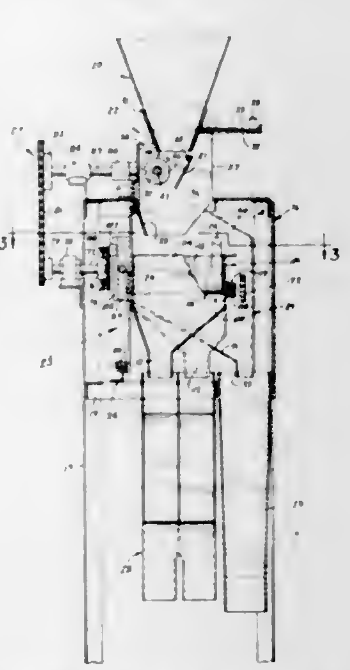

A grain sampling apparatus having a feed chute for directing grain between a driven roller and a gate operable to spread the grain into a generally flat sheet. Reciprocating transversely through the sheet of grain is a carriage having a pair of hoppers for collecting samples of grain and directing the samples into separate sample discharge chutes. The excess grain is directed into a bypass chute with a trough mounted on the carriage.

3,397,583
CONTROL OF VULCANIZATION STATE AND GRADIENT IN PNEUMATIC TIRES
Lawrence R. Sperberg, Box 12308, El Paso, Tex. 79912
Filed Oct. 24, 1965, Ser. No. 504,727
26 Claims. (Cl. 73—432)

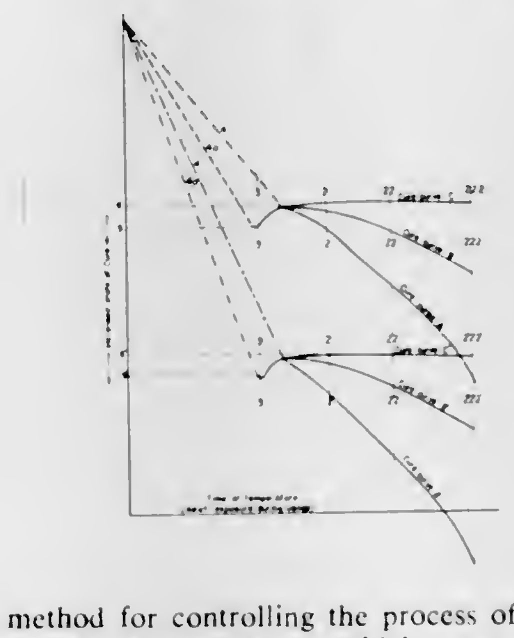

A method for controlling the process of vulcanization during tire manufacture by utilizing cure gradient and curative state concepts. Conversion of wear data into these concepts provides a measure of the degree of vulcanization a tread wearing compound has undergone. In order to increase the accuracy of the wear test, specially selected tires, which are measured and selected because of their low radial and lateral force variations, are included in the test in order to provide "screened tires." The screened tires have the percentage composition of the various compounds contained within the tread wearing surface varied to thereby provide a comparison between the wear resistance of the different tread compounds. By utilizing cure gradient concepts as set forth herein, the optimum tread compound, that is, the tread compound which exhibits the ability to outperform other tread compounds, may be readily selected and the process of vulcanization for manufacturing other tires may be adjusted in accordance with the test results to thereby provide a superior tire.

3,397,584
DUAL RATE BUSHING FOR SICKLE DRIVES
Earl E. Koch, Mohnton, Pa., assignor to Sperry Rand Corporation, New Holland, Pa., a corporation of Delaware
Filed Aug. 25, 1966, Ser. No. 575,127
4 Claims. (Cl. 74—60)

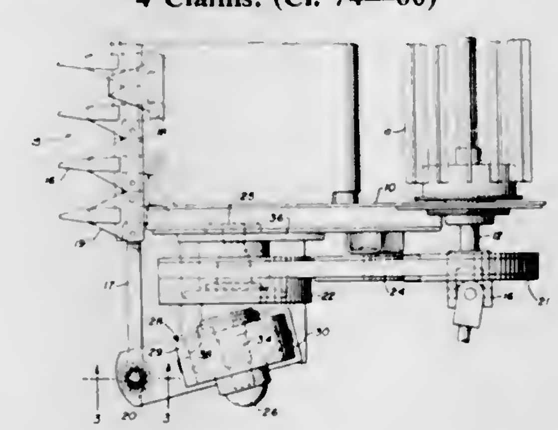

A dual rate bushing for a sickle drive having a horizontally extending drive arm supported for pivotal movement about a vertical axis, one end of the arm being pivotally connected to the sickle through a resilient bushing, while the other end of the arm is connected to an oscillatory drive means, whereby as the drive means oscillates the drive arm, the reciprocating driving force is transferred to the sickle through the resilient bushing due to the torsional characteristics thereof.

3,397,585
QUICK RETURN DRIVE LINKAGE
Harold S. McGowan, Cedar Rapids, Iowa, assignor to Collins Radio Company, Cedar Rapids, Iowa, a corporation of Iowa
Filed Jan. 3, 1966, Ser. No. 518,364
5 Claims. (Cl. 74—75)

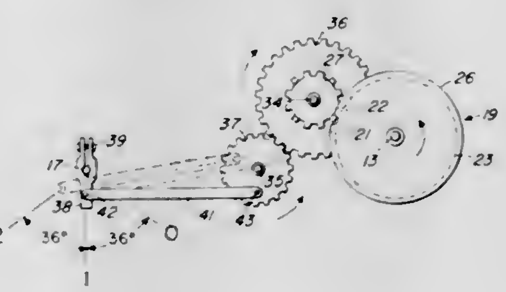

The structure comprises a transfer mechanism in a counter for intermittently transferring motion from a first transfer wheel to a second counter wheel wherein the second counter wheel moves over a smaller arc than the first wheel to indicate a fewer number of digits and in which the operation is reversible.

3,397,586
THREE-AXIS REVERSIBLE SENSOR MOUNT
Gaines M. Crook, Canoga Park, Calif., assignor to TRW Inc., Redondo Beach, Calif., a corporation of Ohio
Filed Jan. 5, 1967, Ser. No. 607,445
5 Claims. (Cl. 74—96)

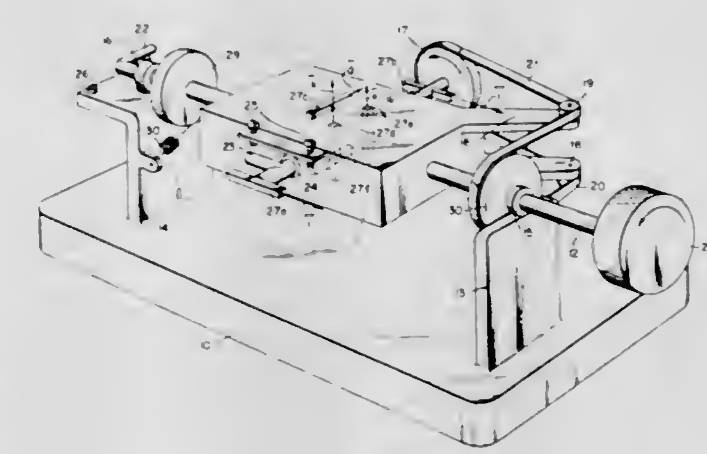

This invention pertains to a three-axis reversible sensor mount wherein a frame is supported for rotation about the axis of the shaft. Sensors are mounted on the frame with their sensing axes mutually orthogonal with the axis of the shaft. A second shaft, perpendicuar to the first shaft, is rotatably attached to the frame. A pulley, fixedly attached to the second shaft, is driven by a belt which passes over a second pulley that is mounted on the first shaft and is held fixed relative to rotation of the first shaft. Sensors are mounted on the second shaft with their sensing axes parallel to the axis of the first shaft and mutually orthogonal to the axes of the sensors mounted on the frame such that the sensing axis of the sensors form a set of cartesian coordinates. A rotation of the first shaft 180° effectively reverses each sensor's sensing axis along their resnective cartesian coordinate axes.

3,397,587
AXIAL PROPORTIONAL LOADING DEVICE WITH OVERLOAD PROTECTION
Charles W. Saussele, Southfield, Mich., assignor to Holley Carburetor Company, Warren, Mich., a corporation of Michigan
Filed Oct. 4, 1965, Ser. No. 492,765
4 Claims. (Cl. 74—200)

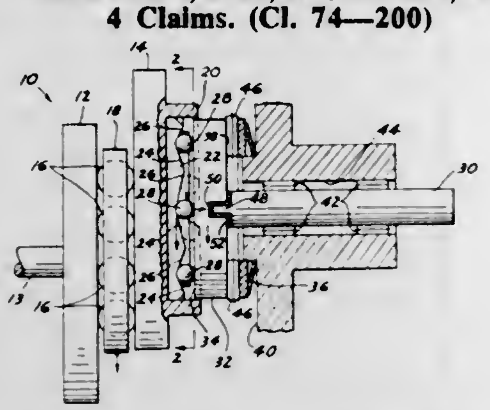

This application discloses a variable speed transmission of the type comprising an input shaft having an input disk connected thereto, an output disk, a plurality of traction drive balls confined between the input and the output disks, a separate output shaft not connected directly to the output disk and journalled in a stationary support, the output disk having a circular series of alternate, connected oppositely-inclined surfaces formed on the side thereof opposite the traction balls, a flat-faced disk disposed adjacent the side of the output disk having the inclined surfaces, a plurality of rolling traction elements confined between the output disk and the flat-faced disk, a thrust bearing and a preload spring disposed between the support and the adjacent side of the flat-faced disk, the spring providing the only axial load on the elements of the transmission from the flat-faced disk to the input disk, the inclined surfaces and their associated rolling traction elements automatically increasing the load as torque transmitted to the output disk increases, and vice versa, the flat-faced disk and the output shaft being drivingly connected by axially resilient means permitting limited axial movement of the flat-faced disk so that the rolling traction elements may move along said inclined surfaces, without applying an appreciable load on the output shaft, thereby permitting the output disk to rotate with respect to the flat-faced disk to provide output overload protection.

3,397,588
DRIVE FOR A TAPPING ATTACHMENT
Allan S. Johnson, 845 W. 16th St., Costa Mesa, Calif. 92627
Continuation-in-part of application Ser. No. 426,966, Jan. 21, 1965. This application Mar. 21, 1966, Ser. No. 535,756
3 Claims. (Cl. 74—376)

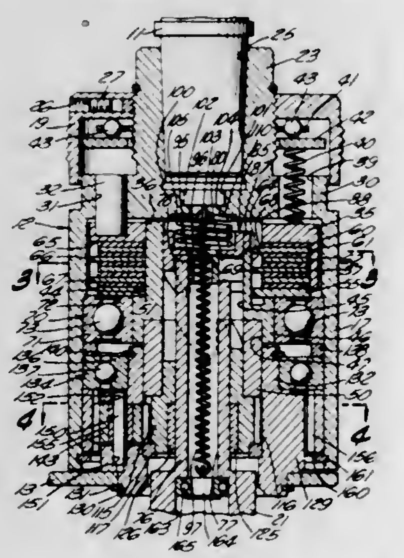

A drive device for tapping attachments which does away with the chattering encountered when releasing the clutch by providing that the input element of the clutch is allowed to move axially against a spring bias.

3,397,589
GEAR TRAIN ASSEMBLIES
Graham Eric Moore, Four Oaks, Sutton Coldfield, England, assignor to Imperial Metal Industries (Kynoch) Limited, Witton, Birmingham, England, a corporation of Great Britain
Filed Apr. 28, 1967, Ser. No. 634,625
Claims priority, application Great Britain, May 23, 1966, 22,873/66
14 Claims. (Cl. 74—397)

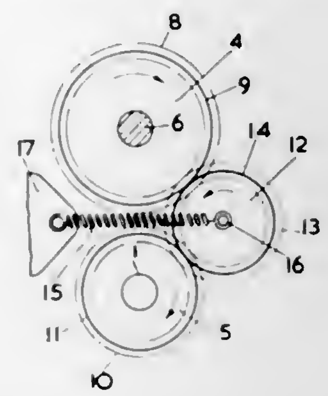

A gear train assembly of driving, driven and idler gears, the idler gear being movable radially of the other gears, and the gears having cylindrical spacers to locate them in correct mesh and being relatively disposed so that during driving of the gears, a resultant driving force acts upon the idler gear in a direction between the other gears to urge and hold the idler gear in correct mesh with the other gears.

3,397,590
HELICAL GEAR DRIVE MECHANISM WITH ANTI-BACKLASH MEANS
Leon A. Prentice, Portland, Oreg., assignor to Tektronix, Inc., Beaverton, Oreg., a corporation of Oregon
Filed Mar. 2, 1967, Ser. No. 620,174
12 Claims. (Cl. 74—409)

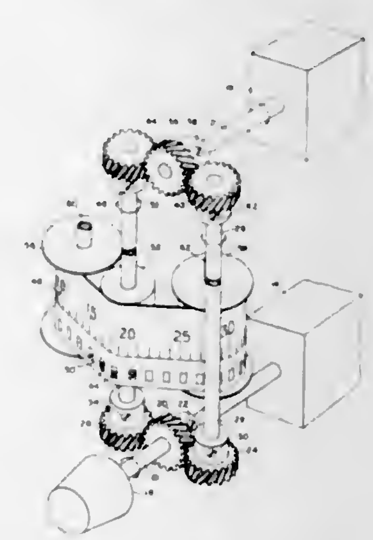

A dial drive mechanism for simultaneously driving tuning means having parallel operating shafts. A first such operating shaft is provided with a tuning knob and a helical driving gear engaging a pair of driven gears on a pair of intermediate shafts angularly disposed with respect to such first operating shaft. Helical driving gears on both the intermediate shafts drive a helical driven gear on the second operating shaft thereby completing a driving mechanism wherein backlash can be substantially eliminated. An indicating dial tape is driven by a sprocket secured to one of the intermediate shafts.

3,397,591
SPEED-REDUCING GEAR TRANSMISSION
Leon Delescluse, Cysoing, France, assignor to Societe Fives Lille-Cail, Paris, France
Filed Mar. 29, 1967, Ser. No. 626,808
Claims priority, application France, Mar. 30, 1966, 55,573
6 Claims. (Cl. 74—410)

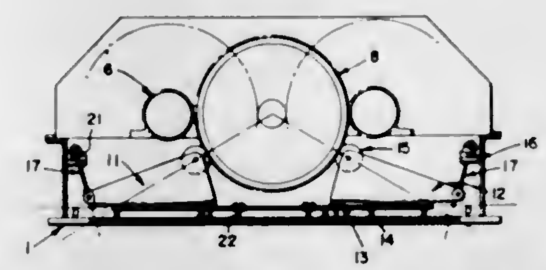

A speed reducing transmission in which the output gear wheel is floatingly supported on two rollers symmetrically arranged relative to a vertical plane through the axis of the gear wheel, each roller being mounted on a carrier angularly movable on the gear box about an axis parallel to the axis of rotation of the gear wheel so that the weight of the gear wheel tends to pivot the carrier against the restraint of calibrated springs interposed between the gearbox and the carriers. The springs permit sufficient displacement of the gear wheel to distribute the driving torque equally on two pinions meshingly engaging the gear wheel in a symmetrical arrangement, and synchronously driven from a common input shaft through gearing and respective countershafts.

3,397,592
HANDWHEEL FOR MACHINE TOOLS AND THE LIKE
Johann Müller, Munich, Germany, assignor to Friedrich Deckel Präzisions Mechanik und Maschinenbau, Munich, Germany, a firm of Germany
Filed Feb. 7, 1966, Ser. No. 525,483
Claims priority, application Germany, Feb. 9, 1965, D 46,478
9 Claims. (Cl. 74—548)

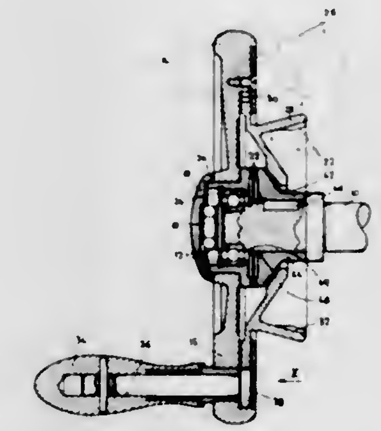

A handwheel loosely mounted on a shaft and normally uncoupled from the shaft so that the handwheel will not be turned when the shaft is rotated by power means. When it is desired to turn the shaft by the handwheel rather than by power means, cooperating clutch parts on the shaft and the handwheel are moved relative to each other in an axial direction. In a first embodiment, a clutch part on the shaft moves axially. In a second embodiment, a clutch part on the handwheel moves axially. In both embodiments, the clutching movement may be accomplished by manually grasping a collar on the rear of the handwheel. In the first embodiment, clutching may also be accomplished by slight turning of a crank handle relative to the handwheel, which causes a camming action to engage the clutch.

3,397,593
DIFFERENTIAL
Frederick D. Knoblock, 436 Bonnie Brier, Birmingham, Mich. 48009
Continuation-in-part of application Ser. No. 468,717, July 1, 1965. This application Apr. 19, 1966, Ser. No. 543,611
17 Claims. (Cl. 74—650)

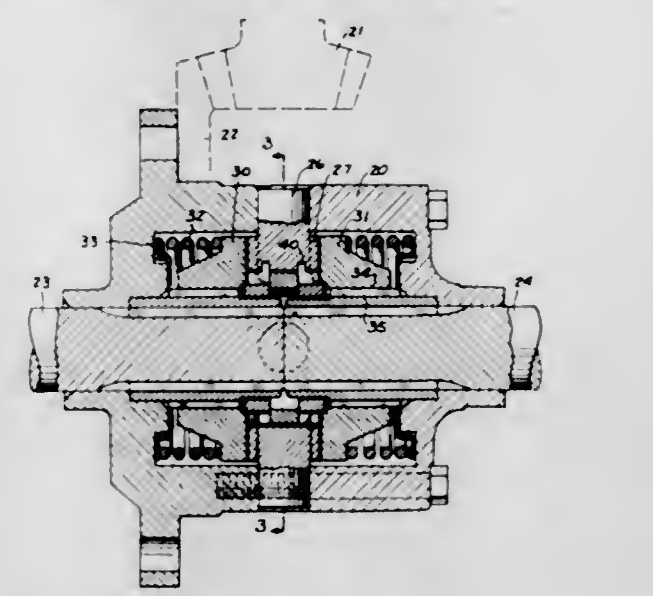

The differential disclosed herein comprises a driving member and a pair of driven members yieldingly urged together. A center cam is rotatably mounted in the driving member and has circumferentially spaced teeth aligned in one position of the center cam with at least some of the teeth of the driving member. A pair of control cams are rotatably mounted in the driving member and have circumferentially spaced teeth aligned in one position with at least some of the teeth of the driving member. Stop means are provided on the driving member for limiting the rotating movement of each control cam.

3,397,594
HYDRO-MECHANICAL TRANSMISSION
John S. Donovan, Detroit, Mich. (109 Queen St., Barrie, Ontario, Canada)
Continuation-in-part of application Ser. No. 438,549, Mar. 10, 1965. This application Nov. 14, 1966, Ser. No. 594,219
2 Claims. (Cl. 74—677)

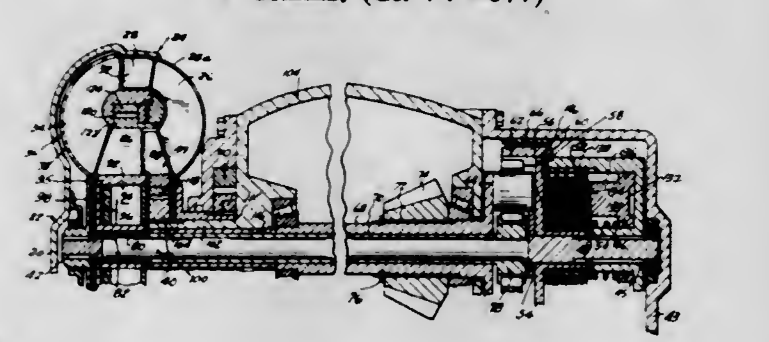

This invention relates generally to a hydro-mechanical transmission. It provides for planetary gears, a primary driven turbine, and a secondary driven turbine. Power output is taken from a pinion gear interposed between the turbines and the planetary transmission. A selectively actuated clutch is provided between a shaft driven by a turbine and the ring gear of the transmission. A brake band can be selectively actuated to hold the ring gear to the housing of the transmission. Rate of drive reduction can be selected by varying the angle of the attack on vanes on a turbine. This variation is achieved by a curved arm linked to a vane and moved by a hydraulically actuated piston.

3,397,595
LOCKING DIFFERENTIAL
Francis S. Roach, 628 Lincoln Blvd., Freeport, Ill. 61032
Filed Mar. 25, 1966, Ser. No. 537,402
15 Claims. (Cl. 74—710.5)

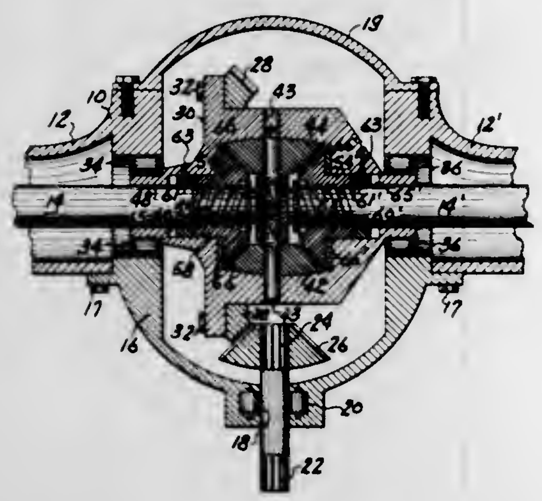

This disclosure relates to a differential of the spider gear type. The bevel gears are threadably mounted on their respective axles, so that the axles and bevel gears may move axially with respect to each other. The differential is locked in one embodiment, in one mode of operation, by urging the axles inwardly into engagement with a centrally located stop block, while the bevel gears are urged outwardly. In the reverse mode of operation, the lock arises by urging the axles outwardly so that collars on the axles engage the differential case. In either mode of operation the lock is released by differentiating action in which one axle is driven, by its wheel, faster than the other. In another embodiment, the stop block is omitted; the inner ends of the axles are urged together to produce a lock in one mode of operation, and the lock in the reverse mode of operation arises by urging the axles outwardly, so that the inner sides of flanges provided on the inner ends of the axles engage portions of a clamp mechanism surrounding the flanges.

3,397,596
AUTOMATIC CONTROL FOR CHANGE-SPEED GEARS, ESPECIALLY FOR MOTOR VEHICLES
Siegfried W. L. Lubinski, Wolfsburg, Germany, assignor to Die Volkswagenwerk Aktiengesellschaft, Wolfsburg, Hannover, Germany, a corporation of Germany
Filed Jan. 17, 1964, Ser. No. 338,437
Claims priority, application Germany, Jan. 18, 1963, V 23,526
9 Claims. (Cl. 74—731)

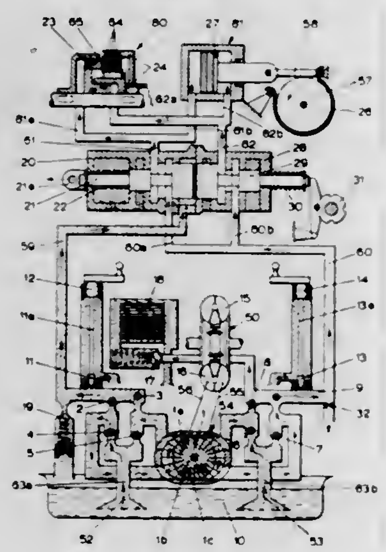

1. Automatic change speed gear including a hydrodynamic element containing a pump impeller and a turbine wheel, comprising hydraulically operated shifting elements to effect the shifting of the change speed gear, a pressure line system to which said shifting elements are connected, at least one pump to deliver pressure to the line system through a fluid connection, said pump impeller being connected with one side of the pump, and the other side of the pump being connected with the turbine, said pressure line system being operatively connected with the shifting elements, and servo installations in said system being acted upon by the pressure in the line system and provided to control the hydraulically operated elements.

3,397,597
HYDRAULICALLY CONTROLLED PLANETARY DRIVE STRUCTURE
Otto E. Szekely, Palm Beach, Fla., assignor to A.E.M. Division, Power Flo Products, Inc., Hialeah, Fla., a corporation of Florida
Filed Mar. 21, 1966, Ser. No. 535,848
4 Claims. (Cl. 74—782)

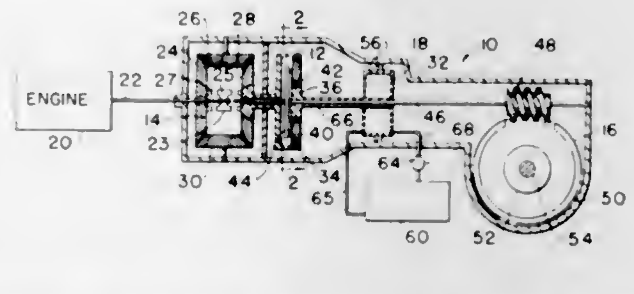

Automatic transmission structure comprising epicyclic gearing including an internal ring gear, a sun gear within the ring gear and a plurality of planet gears positioned between and in mesh with the ring gear and sun gear, reversible differential drive means connected to the ring gear at one side thereof, worm and worm gear output means connected to the planet gears through spider means on the differential side of the epicyclic gearing and hydraulic pump means connected to the sun gear for varying the speed and torque of the output means in relation to the speed and torque of the input means.

3,397,598
REVERSIBLE HYDRAULIC TRANSMISSION
Ambrose E. Zierick, 5700 Arlington Ave., Riverdale, N.Y. 10471
Continuation-in-part of application Ser. No. 511,734, Dec. 6, 1965. This application Nov. 7, 1966, Ser. No. 592,632
2 Claims. (Cl. 74—794)

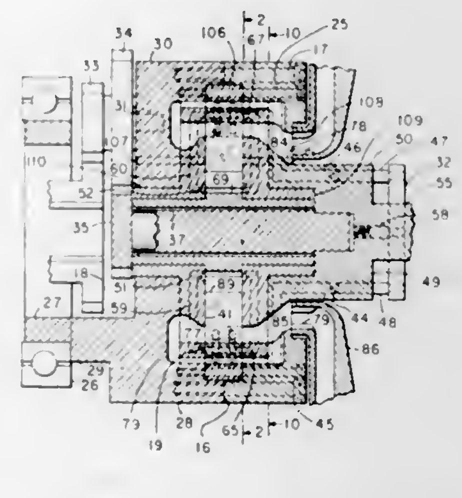

A hydraulic supercharged variable speed, oscillating reversible cam transmission, adapted to be coupled with a constant speed reversible motor, in which the variable speed transmission combines a planetary gear system with an oscillating reversible cam means in the clutch thereof.

3,397,599
TOOL MANUFACTURE
William H. Burkhart, Jr., 29 Dryden Terrace, Short Hills, N.J. 07078
Original application June 11, 1963, Ser. No. 287,150. Divided and this application Apr. 1, 1966, Ser. No. 539,414
7 Claims. (Cl. 76—107)

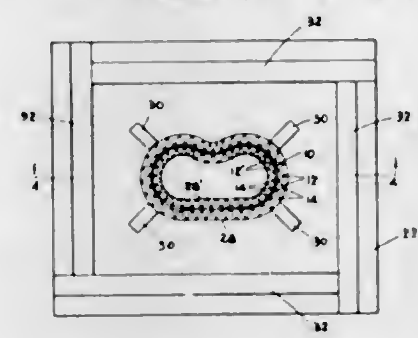

A tool and method of making a tool which employs a plurality of shearing elements. The shearing elements are mounted in adjacent parallel relationship on a flexible strip. The elements each have a substantially flat face adjacent the strip and terminate in a shearing edge so that the shearing edges of the plurality of elements furnish a total shearing edge extending lengthwise of the flexible strip. A strip with the shearing elements mounted thereon is positioned on a work surface and the strip is bent to the curvature desired for the shearing edge of the tool. Then, a matrix is provided to maintain the elements in their desired curvature, following which the mounting strip is removed.

3,397,600
BUSHING ADAPTER FOR DRILL UNITS
Wesley G. Wells, Hazelwood, Mo., assignor to McDonnell Aircraft Corporation, St. Louis, Mo., a corporation of Maryland
Filed Mar. 18, 1966, Ser. No. 535,399
1 Claim. (Cl. 77—7)

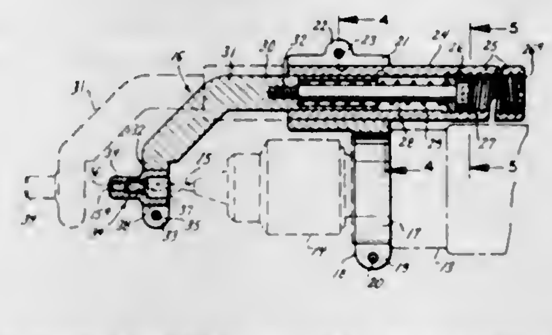

An adapter device for movably supporting guide bushings on a power tool so that the guide bushing may be adjustably disposed in advance of the drill or reamer mounted in the power tool chuck. The guide bushing is intended to yield on advance of the power tool into the work and to limit the amount of yielding in order to control the inward stroke of the drill or reamer.

3,397,601
UNITIZED BRAKE FOR A FASTENER-SETTING DRIVER
Ronald W. Batten, Torrance, Calif., assignor to Hi-Shear Corporation, Torrance, Calif., a corporation of California
Filed Apr. 18, 1966, Ser. No. 543,223
18 Claims. (Cl. 81—56)

This disclosure relates to a brake for use in a fastener-setting driver and to a fastener-setting driver incorporating a brake which includes a unitary assembly of brake bodies and brake load means which is adapted to be fitted to the driver frame, there to provide braking means at one end for one of two elements of a fastener set by counter-rotation, such as a nut and a bolt. The device is characterized by the provision of two brake bodies which are forced together by brake load means, the bodies and brake load means being held together as a unitary as-

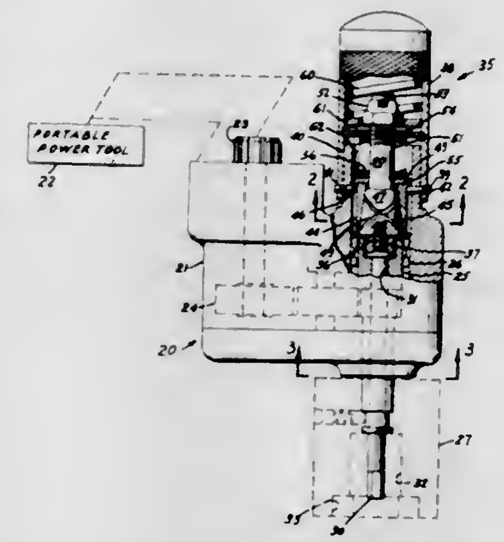

sembly that is readily removed and replaced when different levels of brake load, or a newly calibrated load, are desired.

3,397,602
HOLDING TOOL FOR STARTING SPARKPLUGS
Mickey L. Estep, 2236 Hendricks St., and Karl G. Kaufman, 104 E. Center St., both of Warsaw, Ind. 46580
Filed June 21, 1967, Ser. No. 647,801
4 Claims. (Cl. 81—125)

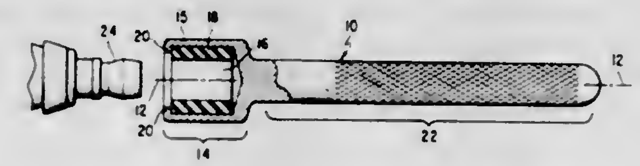

An elongated tool for holding sparkplugs has a cylindrical hole at one end. A resilient gripping member is positioned in the hole and retained by a flange. The gripping member has a cylindrical hole for receiving the terminal end of a sparkplug so that the sparkplug may be held and rotated by the tool.

3,397,603
STRAND MEASURING AND CUTTING APPARATUS
James L. Griswold, Highway M–60, Union City, Mich. 49094
Filed Oct. 18, 1965, Ser. No. 497,072
12 Claims. (Cl. 83—42)

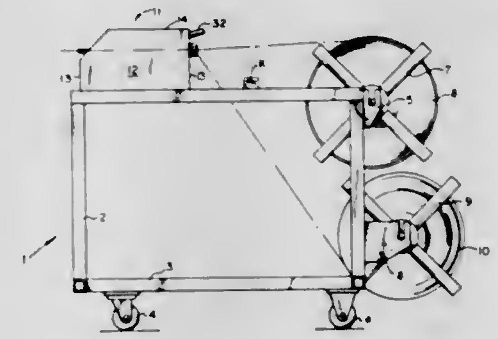

Strand cutting and measuring apparatus for delivering measured lengths of strand material from a reel or other supply including: a feeding wheel receiving the strand from the supply, a motor driving the feeding wheel, a motor driven timer having a settable pointer mounted adjacent a length scale operable to interrupt the feeding wheel motor in response to the lapse of a selected time period of operation of the feeding wheel, a normally inoperative

brake automatically and positively stopping said feeding wheel in response to interruption of the feeding wheel motor, a strand cutter movable to and from a cutting position, a motor moving said cutter in response to interruption of said feeding wheel motor after a time delay for braking, and mechanism for automatically restarting the feeding wheel following operation of the cutter.

3,397,604
ACTION FOR KEYBOARD INSTRUMENTS
René Seybold, 8 Rue des Arquebusiers, Strasbourg, Bas-Rhin, France
Filed Aug. 3, 1964, Ser. No. 387,116
Claims priority, application Germany, Aug. 6, 1963, S 86,571
16 Claims. (Cl. 84—258)

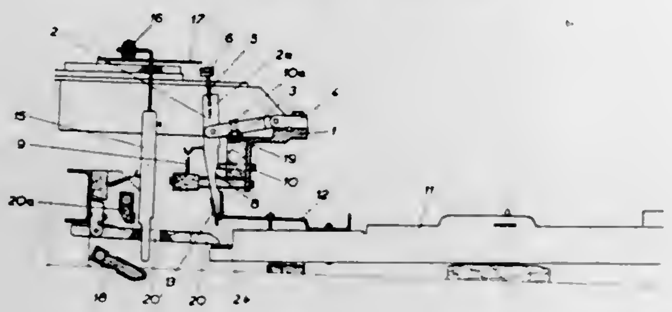

A keyboard instrument comprising a plurality of sound generators, a plurality of plectrums each adapted to strike each sound generator, respectively, a plurality of jumpers each adapted to pivot around an upwardly movable horizontal axis and each jumper being a two-armed lever including an upper and a lower arm. The upper arm carries a corresponding plectrum at its upper end thereof. Each of the jumpers is shiftable pivotally about the upwardly movable horizontal axis between an upper and a lower position. A plurality of control members are provided and means through which each control member when actuated, raises the horizontal axis as well as pivoting the lower arm of a corresponding jumper into its upper position along an upward pivotal path of the upper arm of the corresponding jumper engaging a corresponding sound generator and upon release of the control member allows the jumper to first pivotally move along a downward pivotal path extending away from the sound generator freely returning into its lower position.

3,397,605
FREQUENCY MODULATED RADIANT ENERGY SCANNER EMPLOYING CAVITATION INDUCED DIFFRACTION
Harry P. Brueggemann, San Marino, Calif., assignor to The Marquardt Corporation, Van Nuys, Calif., a corporation of California
Filed Jan. 22, 1964, Ser. No. 339,521
9 Claims. (Cl. 88—1)

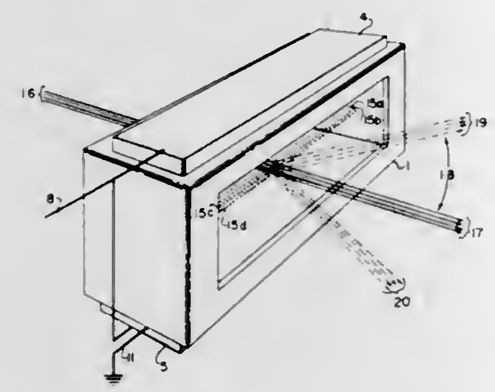

A light scanning device is described which responds to a frequency-modulated input signal to produce a corresponding angular diffraction of a light beam passed through the device. Diffraction of the light beam is produced by means of a bubble screen in a transparent liquid placed in the beam's path. Frequency-modulated ultrasonic energy, propagated into the liquid, induces cavitation and thereby produces the bubbles forming the diffraction screen.

3,397,606
RANGE FINDER AND VIEW FINDER FOR PHOTOGRAPHIC CAMERAS
Ernst Leitz and Wilhelm Stein, Wetzlar (Lahn), Germany, assignors to Ernst Leitz, Gesellschaft mit beschränkter Haftung, Wetzlar (Lahn), Germany
Filed Aug. 24, 1962, Ser. No. 219,281
Claims priority, application Germany, Aug. 26, 1961, L 39,875
12 Claims. (Cl. 88—2.7)

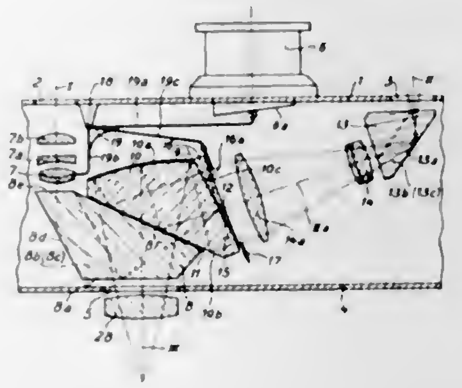

1. A range finder and view finder for a photographic camera comprising; a casing having front and rear walls, said rear wall having an eyepiece aperture therein, said front wall having a range finder aperture and a spaced view finder aperture therein, a first prism positioned between said eyepiece aperture and range finder aperture and having an entrance surface receiving light rays from said range finder aperture, an exit surface on said first prism adjacent to said eyepiece aperture and perpendicular to the optical axis thereof, a base surface inclined to said exit surface, and roof surfaces forming a common edge and being inclined to said exit surface so that the light rays from said entrance surface are reflected by said roof surfaces on to said exit surface wherefrom they are totally reflected towards and through said base surface, a second prism having a concave mirror coated surface and a base surface with both said surfaces positioned in the optical axis of said eyepiece aperture, the base surface of said second prism being positioned adjacent to the base surface of said first prism to form an air gap therebetween, an entrance surface on said second prism adapted for receiving light rays from said view finder aperture. Optical means comprising an angular roof prism and telescopic objective lens means between said view finder aperture and said entrance surface on said second prism for reflecting light received from said view finder aperture towards said last named entrance surface and for forming a view finder intermediate image adjacent to said last named entrance surface, telescope objective lens means adapted for receiving light rays from said range finder aperture to form an intermediate image adjacent to said entrance surface of said second prism, a range finder mirror means arranged upon the said entrance surface of said second prism adjacent to the plane of the range finder intermediate image, said range finder mirror reflecting the light rays from said range finder aperture towards said base surface and said concave mirror coated surface of said second prism thereby combining the light rays from said range finder and view finder apertures, the said concave mirror coated surface and said base surface of said second prism being so inclined with respect to each other and to the optical axes of the view finder telescopic objective lens means and the eyepiece aperture that the combined light rays from said intermediate images and said range finder mirror means impinging upon the said base surface are reflected by total reflection towards said concave mirror coated surface from where said light rays are reflected towards said eyepiece aperture opening, said light rays reflected by said concave mirror coated surface passing through said air gap, said concave mirror coated surface serving as the eyepiece for observing the said intermediate images and the said range finder mirror means.

3,397,607
SINGLE FARADAY CELL POLARIMETER
John Knowles Goodwin, 3 Brookside Ave., East Leake, Loughborough, Leicestershire, England
Filed Oct. 31, 1963, Ser. No. 320,325
3 Claims. (Cl. 88—14)

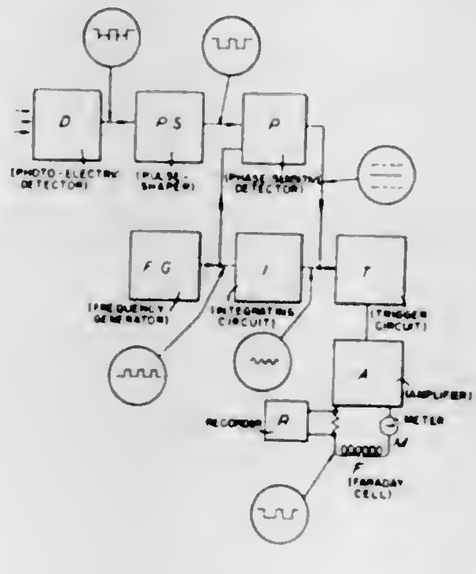

1. In a polarimeter having a single Faraday cell and a photodetector receiving light passing through a sample and said Faraday cell, means for applying to the Faraday cell an oscillating electric control signal having a square wave-form symmetrically disposed about a reference axis and with equal positive and negative pulse widths, comprising a frequency generator, an integrating circuit supplied thereby and delivering an output having a saw-tooth wave-form, and a trigger circuit responsive to the output of the integrating circuit to develop the control signals; and ratio adjustment means for adjusting the ratio of the positive pulse width to the negative pulse width in any complete cycle of oscillation comprising a converter by which the output of said light-receiving detector is converted into a direct current potential, and said trigger circuit to which the direct current potential and the output of said integrating means are applied to adjust the operation of the trigger circuit and thereby the pulse width ratio of the control signal.

3,397,608
DISPLACEMENT SENSING DEVICE
Charles R. Ellis, Newton, Mass., assignor to Keuffel & Esser Company, Hoboken, N.J., a corporation of New Jersey
Filed Mar. 3, 1964, Ser. No. 349,076
7 Claims. (Cl. 88—14)

A device for measuring displacement between two bodies relative to a beam of light extending between the bodies in which the displacement is measured transversely to the beam of light by means of a beam of collimated light having at least two sharply divided polarized beam sectors with each beam sector having a distinctively different polarization characteristic from the other beam sectors and passing such beam of polarized light through an analyzer including a pair of screens in the path of the beam of light which screens prevent the passage of a particular polarized beam sector while permitting the passage of a different polarized beam sector

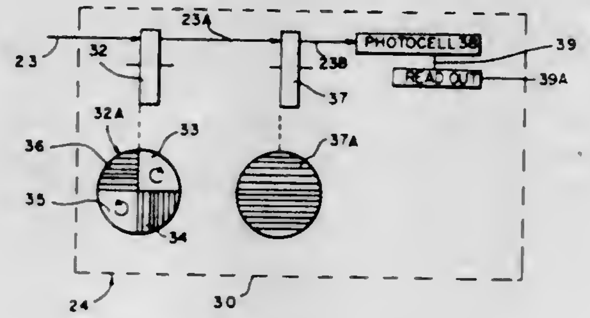

and measuring the amount of light passing through such screens to thereby determine the lateral displacement. The device may also include electronic autocollimating sensors which measure angular rotation about two mutually perpendicular axes which are generally perpendicular to the beam of polarized light.

3,397,609
OPTICAL INSPECTION APPARATUS FOR SURFACE COATINGS ON ARTICLES OF GLASSWARE OR THE LIKE WHEREIN THE ARTICLES ARE INSPECTED IN A LIQUID HAVING THE SAME INDEX OF REFRACTION AS THE GLASS
Aaron K. Lyle, West Hartford, and Constantine W. Kulig, Windsor, Conn., assignors to Emhart Corporation, Bloomfield, Conn., a corporation of Connecticut
Filed Feb. 25, 1965, Ser. No. 435,224
9 Claims. (Cl. 88—14)

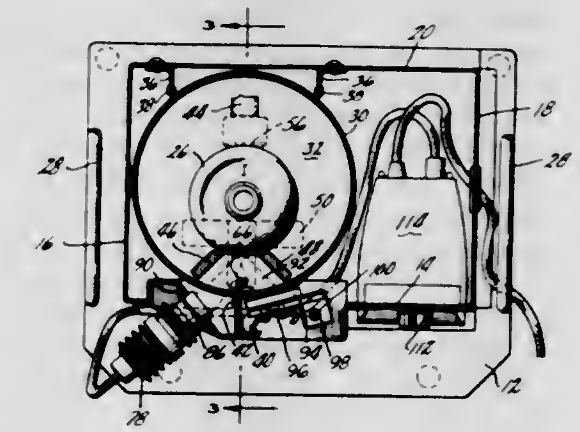

1. In optical inspection apparatus for measuring the relative thickness of light reflective surface coatings on articles of glassware or the like, the combination comprising a reservoir open at the top and containing a liquid having an index of refraction approximately the same as the base material of the coated article but which differs substantially from the index of refraction of the surface coating on the article, said reservoir having at least a portion of a side wall which is transparent, means for holding an article of glassware in an upright attitude at an inspection station within said reservoir with the article of glassware at least approximately filled with the reservoir liquid, said holding means including at least one resilient holding element and at least one other holding element each engageable with a side wall of an article at the inspection station and adapted to secure the article in position and yet accommodate rotation of the article about a vertical axis, and said holding means including at least one camming surface engageable by an article on downward movement of the article from above the inspection station and serving to accommodate downward insertion of the article into said holding means and automatic retention of the article at said inspection station by

said holding means, a light source unit and means supporting the same in position outwardly of said reservoir so as to cast a beam of light generally horizontally through said transparent wall portion and at an acute angle to the surface coating of said article of glassware or the like secured at said inspection station by said holding means, a light sensitive receiving unit and means supporting the same outwardly of said reservoir so as to accept a generally horizontal beam of specularly reflected light through said transparent wall portion of said reservoir and from the surface coating on an article held at said inspection station, and electrical means including a meter connected with said light sensitive receiving unit and adapted to provide a visual indication which varies with the strength of the beam of light reflected from the coating on an article under inspection.

3,397,610
PREPRINTED NEWSPRINT WEB REGISTER DEVICE
Albert E. Meier, Muncie, Ind., assignor of one-half to Muncie Newspapers, Inc., Muncie, Ind., a corporation of Indiana
Filed Aug. 5, 1965, Ser. No. 477,488
3 Claims. (Cl. 88—14)

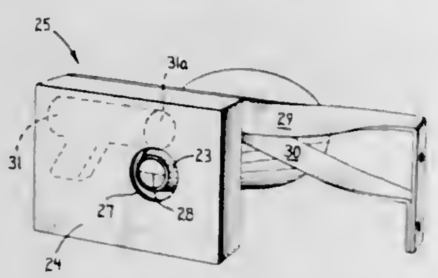

1. An apparatus for use with a rotary press to give a visual indication of the positional alignment with relation to a stationary reference mark of break lines spaced along a moving web of newsprint in the press, said means comprising a scanning tube mounted over the moving web so as to scan the web area carrying the break lines, a sighting member extending across the interior of the tube parallel to the break lines passing beneath it on the press, a housing attached to said tube with the tube extending through the housing to the housing wall nearest the moving web, an illuminating means within the housing adapted to be energized upon receipt of an electrical signal pulse from a control means, said control means including an element actuated with each revolution of the press impression cylinder to provide the electrical signal pulse, said housing wall nearest the moving web having an aperture therein accommodating the adjacent end of said scanning tube and sized to provide an annular gap between the tube and the aperture margin for transmission of light from the illuminating means to the moving web, whereby the break line area of the moving web is intermittently illuminated to provide a stroboscopic visual indication in the scanning tube of the positional alignment of successively appearing break lines with the scanning tube sighting member.

3,397,611
EXPOSURE CONTROL APPARATUS
Arthur Gordon Davies, London, England, assignor to Medical and Electrical Instrumentation Company Limited, London, England, a British company
Filed July 1, 1965, Ser. No. 468,816
Claims priority, application Great Britain, Nov. 14, 1964, 46,457/64
6 Claims. (Cl. 88—24)

Exposure control apparatus, particularly suitable for a photographic enlarger, has a photo-sensitive device responsive to the radiation, e.g. light transmitted through a photographic negative, which photo-sensitive device is connected in a bridge circuit with adjustable ratio arms and with an adjustable balancing impedance. When the bridge is balanced, the balancing impedance is switched out of the bridge circuit into a timing circuit to control

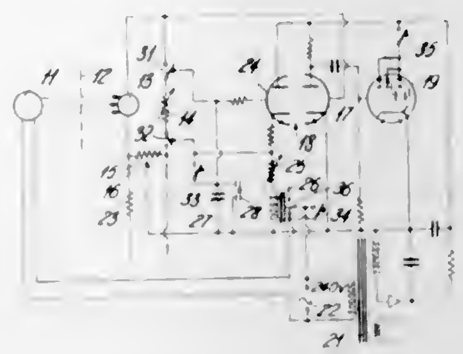

the duration of energization of the radiation source, e.g. the enlarger lamp. A further switch may be provided to initiate operation of the timing circuit, which circuit may include a further adjustable element to adjust the ratio between the time period and the magnitude of the balancing impedance.

3,397,612
DEVICE FOR PHOTOGRAPHIC EXPOSURE, PREFERABLY FOR ENLARGERS
Wolfgang Ludloff, Porz-Westhoven, Germany, assignor to Gesellschaft fur Multiblitzgeräte, Dr. Ing. D. A. Mannesmann m.b.H., Porz-Westhoven, Germany
Filed July 7, 1965, Ser. No. 470,010
Claims priority, application Germany, July 16, 1964, G 41,098
10 Claims. (Cl. 88—24)

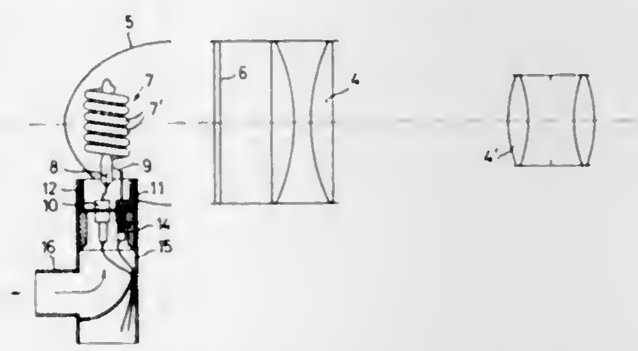

A repetitive flash illumination apparatus for photographic duplication devices such as an enlarger has a high voltage discharge lamp, including a tubular envelope, coiled into a cylinder. A cooling air flow is forced through the lamp socket and the cylinder. The power supply for the lamp has a relay controlled by a manually operable switch which gives a delayed energization of the apparatus after the switch is closed. One capacitor is connected in parallel with the discharge lamp. Through the use of a manually operable switch and a relay a second capacitor may selectively be connected in parallel with the first capacitor. The operation of the lamp is controlled through a tetrode having two grids. Controls are connected to one grid to control whether the lamp is operated or not and the second grid is connected to a timing circuit to produce repetitive flashing of the lamp when the lamp is set "on." The lamp is fired at a given frequency during a limited exposure time no greater than a given maximum time interval. The capacitance is such that it is charged to a lamp operating voltage at least at the given frequency and when discharging through the lamp produces no more heat in the lamp, by flashes at the given frequency and during the given maximum time interval, than that which will be substantially carried away by the cooling air flow without overheating the lamp.

3,397,613
TRANSPARENCY HOLDER FOR PHOTOGRAPHIC PRINTER
Karl J. Kallenberg, Minneapolis, Minn., assignor to Pako Corporation, Minneapolis, Minn.
Original application Apr. 16, 1962, Ser. No. 189,663, now Patent No. 3,228,284, dated Jan. 11, 1966. Divided and this application Aug. 3, 1965, Ser. No. 476,813
2 Claims. (Cl. 88—24)

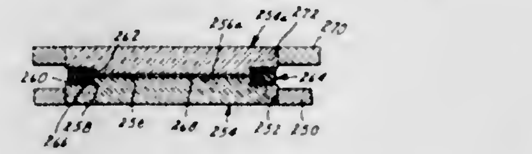

A device for supporting a single photographic transparency mounted in a frame and includes a transparent lower mount formed of a base portion having a table portion extending upwardly from the base portion. The table portion has a flat upper surface of an area less than that of the base portion which forms a peripheral recess on the lower mount. Further included is an upper mount substantially identical to the lower mount with the flat surface of the table portion of each mount being slightly less than the area of the transparency bounded by the frame together with means for positioning the upper mount upon the lower mount in juxtaposition to hold the transparency between the table portions independent of the frame.

3,397,614
MACHINE TOOL SPINDLE CLAMPING MEANS
Wilbur E. Meinke, Fairview Park, Ohio, assignor to The New Britain Machine Company, New Britain, Conn., a corporation of Connecticut
Filed Nov. 15, 1965, Ser. No. 507,779
16 Claims. (Cl. 90—11)

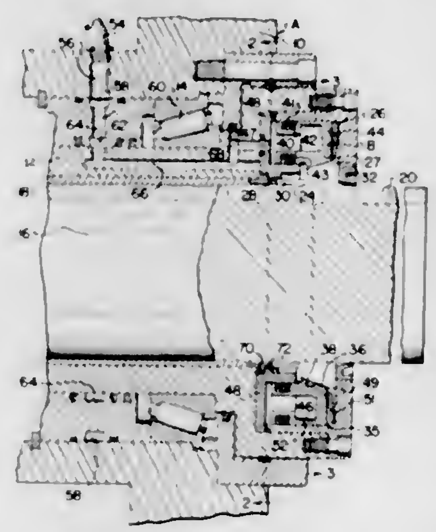

A device for selectively clamping a spindle of a machine tool to a surrounding sleeve including a wedge clamp around the spindle and a piston between the clamp and the sleeve for actuating the clamp to apply a radial clamping force to the spindle.

3,397,615
TOOL ARBOR
Wilbur E. Meinke, Fairview Park, Ohio, assignor to The New Britain Machine Company, New Britain, Conn., a corporation of Connecticut
Filed Feb. 28, 1966, Ser. No. 530,291
5 Claims. (Cl. 90—11)

In a tool arbor having a tool attachable end adapted to support a work tool and a spindle attaching end adapted to be engaged by a draw back mechanism within a tool spindle, structure defining an unobstructed aperture extending axially through the arbor for permitting a driving tool to be inserted into the aperture from the spindle attaching end of the arbor and engaged with an

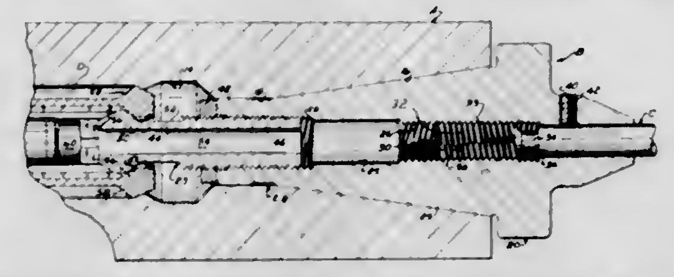

adjustable tool abutment member mounted in the aperture.

3,397,616
MILLING MACHINE
Johann Müller, Munich, Germany, assignor to Friedrich Deckel Präzisions Mechanik und Maschinenbau, Munich, Germany, a firm of Germany
Filed Dec. 6, 1965, Ser. No. 511,642
Claims priority, application Germany, Dec. 9, 1964, D 46,010
3 Claims. (Cl. 90—18)

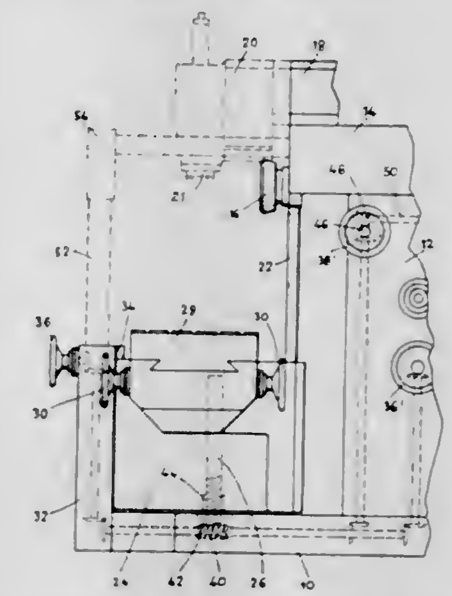

A milling machine has a main column provided with a vertical guideway on its front face and a spindle stock at its top. A knee supporting a work table moves vertically on the guideway on the main column. In front of the knee and spaced forwardly from the main column is a vertically extending stationary bracing structure having a vertical guideway on its rear face engaged with a vertical guide part on the front face of the knee, to give added stability to the knee. Handwheels are mounted on the front of the vertical bracing structure, for performing various adjustments such as the vertical adjustment of the knee and the horizontal adjustment of the spindle stock, these handwheels remaining always at a predetermined convenient elevation notwithstanding upward and downward movements of the knee and work table. A counterstay for a spindle head has a supporting post which is supported from the vertical bracing structure and which can be dropped down at least partly into a socket in the vertical bracing structure when it is not in use.

3,397,617
PNEUMATIC PERCUSSION MACHINE
Adolf Cast, Oberlenningen, Wurttemberg, and Kurt Reich, Nuertingen, Wurttemberg, Germany, assignors to Karl M. Reich Maschinenfabrik, Nurtingen, Wurttemberg, Germany, a firm of Germany
Filed Jan. 19, 1965, Ser. No. 426,521
17 Claims. (Cl. 91—41)

An improved pneumatic percussion machine in which a holding device of rubberlike elastic material is operatively mounted in the machine. The holding device com-

prises a holding element, which is adapted to resiliently engage a nail-driving piston reciprocally mounted in said machine when the later is in a rest position and to suddenly

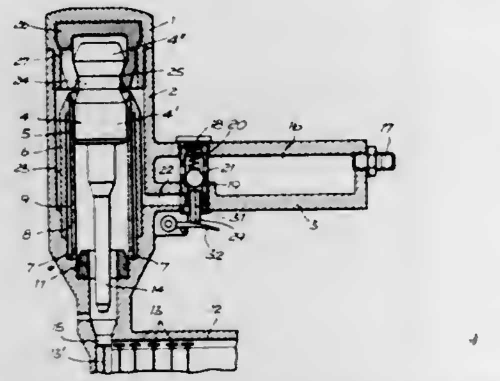

release said piston with a snap action after a predetermined pneumatic driving force has built up behind said nail-driving piston.

3,397,618
VARIABLE SPEED REVERSIBLE ROTARY HYDRAULIC POWER TRANSMISSION
Neil T. Jensen, 1621 Larrabee Road, Bellingham, Wash. 98225
Filed Oct. 21, 1965, Ser. No. 500,101
1 Claim. (Cl. 91—149)

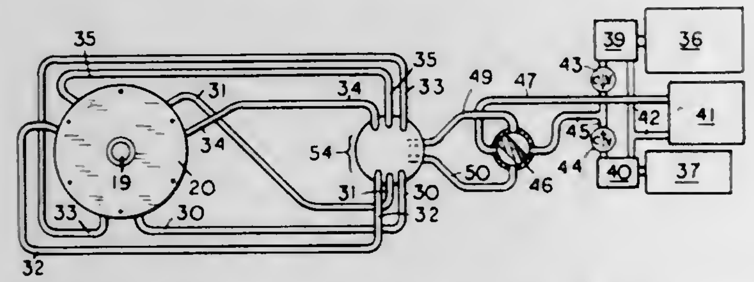

An approximately cylindrical housing contains a rotor carrying swinging vanes which face in opposite directions to make the rotor reversible. Two or more power chambers are formed between the rotor and housing walls and a liquid conduit connects with each end of each power chamber. All of the conduits are connected through a distributing valve and a reversing valve with a pump and reservoir. The distributing valve will direct all of the liquid from the pump through one power chamber for high speed operation or divide the oil between two or more chambers for lower speed operation and short out all chambers not receiving liquid pressure. The reversing valve will reverse the transmission by reversing the direction of liquid flow.

3,397,619
STEAM ENGINE INLET VALVE MECHANISM
Harold V. Sturtevant, 173 Norwood Ave., North Plainfield, N.J. 07060
Filed Dec. 19, 1966, Ser. No. 602,748
6 Claims. (Cl. 91—175)

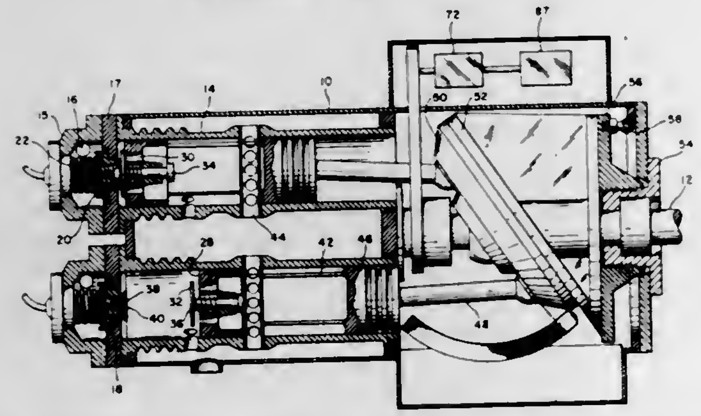

A steam engine having a plate inlet valve opened by the piston and held open by an electromagnet for governor cut-off control, a thrust bearing movable axially of the main shaft mounted on a screw to vary clearance at top dead center, and a small area starting valve opened by an electromagnet against steam pressure.

3,397,620
FLUID ACTUATOR WITH ANNULAR PISTON LOCKING MEANS
Darold M. Skelton, Brookfield, John E. Schultz, South Milwaukee, and Robert A. Bewalda, Jr., Cudahy, Wis., assignors, by mesne assignments, to Milwaukee Cylinder Corporation, Cudahy, Wis., a corporation of Wisconsin
Filed Oct. 6, 1966, Ser. No. 584,818
1 Claim. (Cl. 92—24)

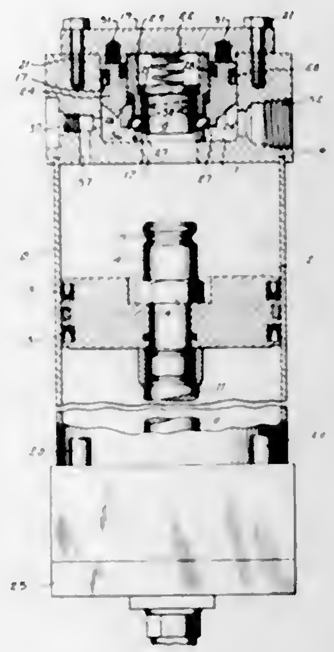

A pneumatic or hydraulically actuated cylinder and piston unit having piston locking means including a singular, annular piston located in the head of the cylinder, which piston is fluid-actuated for urging locking means into engagement with the piston of the cylinder.

3,397,621
VACUUM MODULATOR
Ronald C. Groves, Rochester, N.Y., assignor to General Motors Corporation, Detroit, Mich., a corporation of Delaware
Filed Oct. 14, 1965, Ser. No. 496,117
6 Claims. (Cl. 92—48)

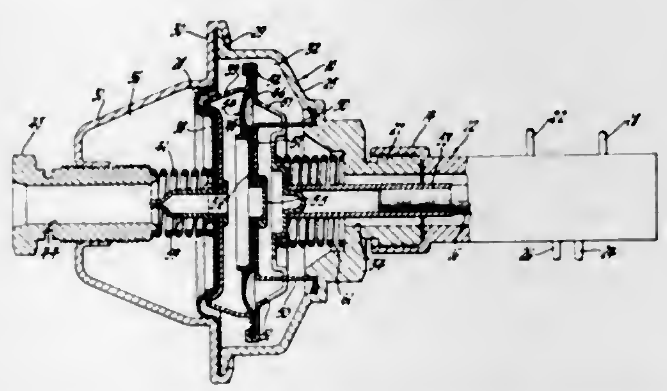

A vacuum modulator for use in automatic transmission control systems, the modulator having a gas impervious diaphragm comprising a metallic foil reinforced by polyester film for sealingly closing a chamber which is evacuated. The evacuated chamber cooperates with a second diaphragm acted on by the pressure differential between atmospheric pressure and engine vacuum to provide a net effective biasing force which varies as a function of engine vacuum and is corrected for varying atmospheric pres-

sure. A cup-shaped member comprising part of the modulator's output force transmitter in addition to securing the diaphragms together cooperates with the gas impervious diaphragm to provide the evacuated chamber.

3,397,622
BAGS
Ralph C. Goodwin, Wayzata, Minn., assignor to Bemis Company, Inc., Minneapolis, Minn., a corporation of Missouri
Original application May 5, 1965, Ser. No. 453,247, now Patent No. 3,129,376, dated Dec. 13, 1966. Divided and this application Oct. 19, 1966, Ser. No. 587,723
22 Claims. (Cl. 93—35)

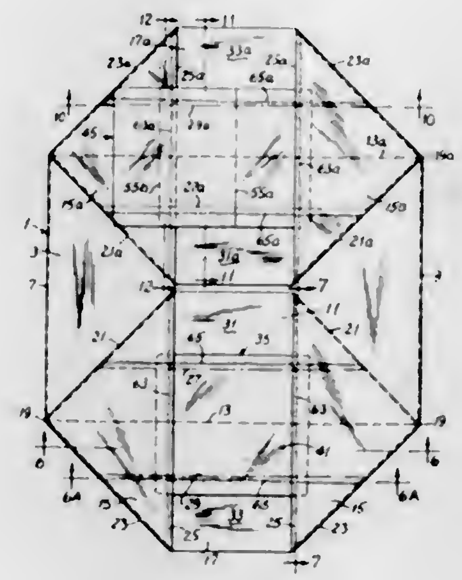

1. The method of making a closure at one end of a bag tube of flexible heat-sealable sheet plastic material comprising folding back a portion of one wall of the tube on a first fold line extending transversely across said wall to provide an end closure formation comprising end flaps having their inner ends spaced from one another and side flaps adapted to be folded over on second and third fold lines located on opposite sides of said first fold line, positioning an insert of flexible heat-sealable sheet plastic material to span the inner ends of the end flaps and lapping the inner end margins of the end flaps, forming a heat seal on a line extending generally parallel to the inner end edge of one of said end flaps and spaced outward therefrom to seal said one end flap and the insert together along said line of seal while inhibiting blocking of said closure formation in the region where said one end flap and the insert are heat-sealed together along said line of seal, forming heat seals on lines extending parallel to and spaced inward from the lateral edges of the insert, folding over said side flaps on said second and third fold lines, and heat-sealing said side flaps together while inhibiting blocking of the closure formation where said side flaps are heat-sealed.

3,397,623
METHOD OF MAKING AN ARTICLE CARRIER
Homer W. Forrer, Jonesboro, Ga., assignor to The Mead Corporation, a corporation of Ohio
Filed Dec. 5, 1966, Ser. No. 599,176
9 Claims. (Cl. 93—36)

A carrier constructed according to this invention may comprise more or less conventional handle, side, end and bottom panels and may also include medial and transverse partitioning structure, the partitioning structure being in the form of at least one supplemental web which is adhered by a patterned application of glue to a main continuous web or to the supplemental web or webs. Following the securement of one or more supplement webs to the main web as described, both webs are passed through a single cutting and scoring die apparatus which by the provision of suitable cutting knives and scoring devices on one die element is adapted to cut both the main and supplemental webs and to score one of the webs. The other die element is provided with suitable scoring devices whereby the remaining web is scored simultaneously with

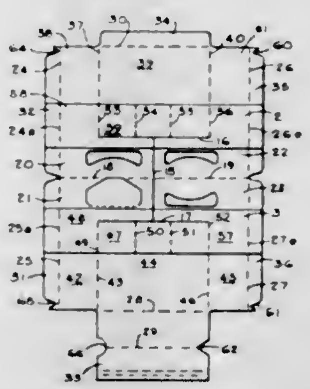

the cutting and scoring operation performed on the other web by the other die element. In this manner a carrier is provided which can be either of the full depth or strap style without the necessity of modifying or adjusting the steps or apparatus utilized in the manufacture of the carrier. Furthermore, the procedure for manufacturing a carrier of the so-called laminated type is greatly expedited.

3,397,624
MACHINE FOR FORMING AND SETTING UP CARTONS FROM FOLDED AND COLLAPSED FIBERBOARD FLATS
Grover C. Currie, Jr., Charlotte, N.C., and Warren J. Schieser, Columbus, Ohio, assignors to The Corrugated Container Company, Columbus, Ohio, a corporation of Ohio
Filed Jan. 13, 1967, Ser. No. 609,209
22 Claims. (Cl. 93—36.3)

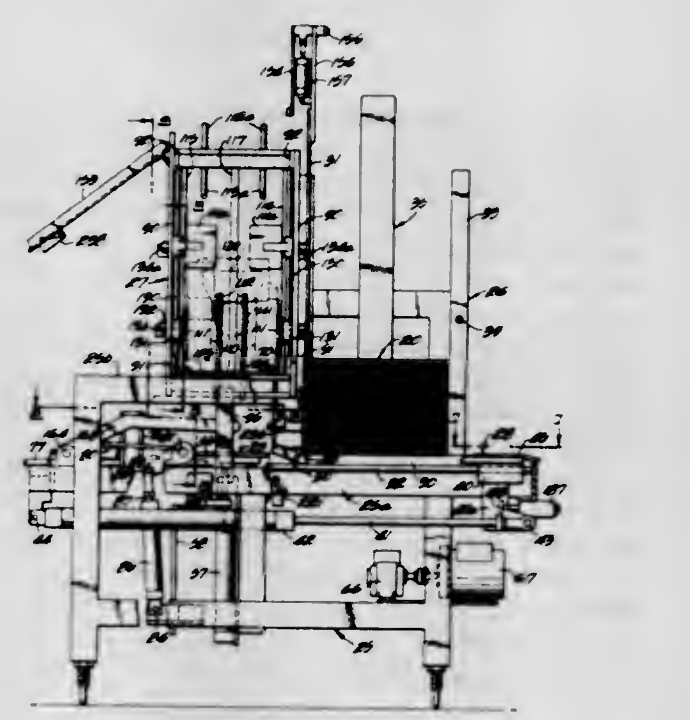

The machine disclosed herein receives folded and collapsed fiberboard flats, expands them and sets them up with the bottom flaps folded and glued in closed position and with the top flaps disposed in upwardly extending condition so that the upper end of each carton is open ready to be loaded. The machine is designed specifically for setting up paperboard cartons or boxes which are adapted to receive a plastic bag that is to be filled with milk or other liquid although it is not necessarily limited to this particular use.

3,397,625
APPARATUS FOR PRODUCING HELICALLY WOUND CYLINDERS
Leonard Leonardi, Moorestown, N.J., assignor to Dietz Machine Works, Inc., Philadelphia, Pa., a corporation of Pennsylvania
Filed Oct. 11, 1965, Ser. No. 494,559
3 Claims. (Cl. 93—80)

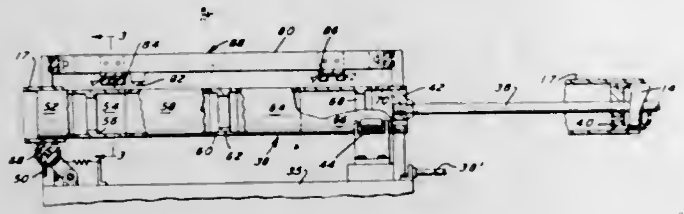

Apparatus for producing helically wound cylinders including an anvil reciprocally and rotatably supported by a carriage in line with a mandrel. A stripping roller is provided adjacent the free end of the anvil. The weight of the anvil is counterbalanced by magnetic means which attracts the free end portion of the anvil upwardly away from the stripping roller to thereby prevent bunching of the helically wound cylinders between the outer periphery of the anvil and the stripping roller.

3,397,626
PLASTIC COATED DOWEL BAR FOR CONCRETE
John B. Kornick, Strongsville, and Edward A. Broestl, North Royalton, Ohio, assignors to Republic Steel Corporation, Cleveland, Ohio, a corporation of New Jersey
Filed Mar. 9, 1967, Ser. No. 621,882
6 Claims. (Cl. 94—8)

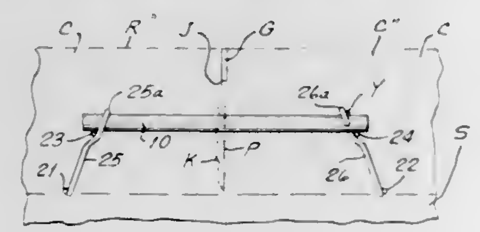

A plastic coated steel dowel bar having a smooth and slippery outer coating layer and a flowable inner coating layer, adapted to be embedded in concrete hardened in situ about the dowel, for provision of low-friction sliding capability between the dowel surface and the contacting concrete, and protection of the steel core of the dowel against corrosion despite the presence of corrosive substances such as salt and despite the mechanical effects of such sliding contact on the outer coating layer. A polyolefin plastic outer coating layer, e.g., a polyethylene plastic layer, is provided with a flowable inner adhesive coating layer, a thermoplastic modified rubber type of adhesive, so as to protect a concrete highway joint dowel bar from the combined effects of friction due to expansion and/or contraction of the joint under shear and bending moment forces, and a corrosive attack by highway salt deposits and other substances carried both within and upon the highway concrete.

3,397,627
PHOTOELECTROSTATIC COPYING MACHINE
John V. Bruning and Robert C. Patzke, Prospect Heights, William A. Ghiselli, Jr., Des Plaines, and John L. Tregay, Wilmette, Ill., assignors to Addressograph-Multigraph Corporation, Mount Prospect, Ill., a corporation of Delaware
Filed May 21, 1965, Ser. No. 457,649
19 Claims. (Cl. 95—1.7)

An apparatus for making copies of a graphic original which is placed face down on the top wall of the apparatus on a transparent glass platen so that it can be illuminated by incandescent light sources within the apparatus. A source of copy sheets is provided from which are automatically fed sheets past a charging station and are carried on a belt conveyor system to an exposure station. Arrival of the charged copy sheet at the exposure station energizes the illuminating means for a given period of

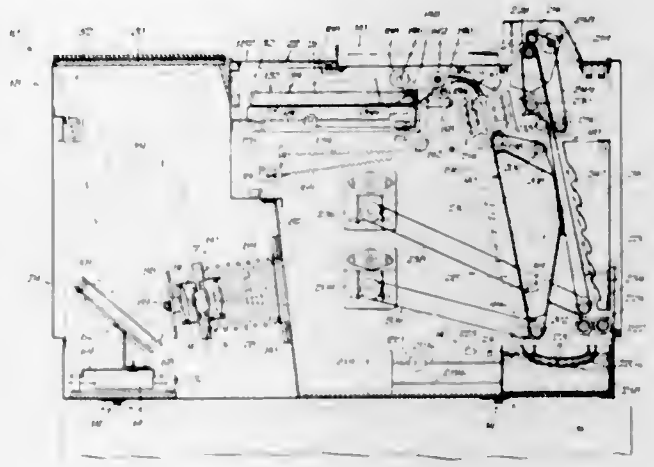

time after which the conveyor is reactivated to deliver the exposed copy sheet to the developing station. An adjustable optical system is provided permitting a 1:1 size image projection or a reduced image to be projected. A separate, independently driven, conveyor system rapidly delivers the copy from the developer to a location outside the apparatus adjacent the transparent platen.

3,397,628
GRAPHIC RECORDER
Daniel B. Granzow, Arlington Heights, Stanley A. Gawron, Mount Prospect, William P. Graff, Chicago, and Pervis A. Swain, Highland Park, Ill., assignors to Addressograph-Multigraph Corporation, Mount Prospect, Ill., a corporation of Delaware
Filed July 28, 1965, Ser. No. 475,522
23 Claims. (Cl. 95—1.7)

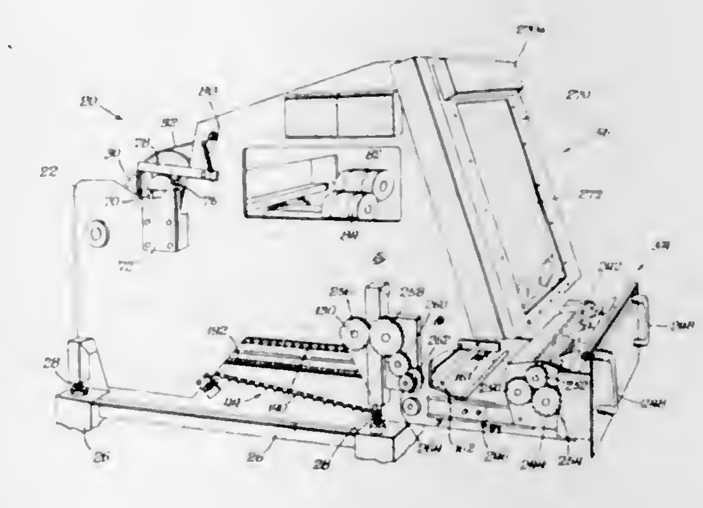

The copying machine includes both line and frame exposing means for a photoelectrostatic member and controls for conditioning the machine to operate in one of these two modes. A movable charging assembly is positioned in different locations in the two modes by the control, and other factors such as charging voltage, speed of movement of the member, and the continuous or intermittent nature of the charging operation are changed by the control in accordance with the copying mode for which the machine is conditioned.

3,397,629
PHOTOGRAPHIC LIGHT CONTROL MEANS
Tadamichi Mori, Tokyo-to, and Koji Tanabe, Higashimurayama-shi, Tokyo-to, Japan, assignors to Citizen Tokei Kabushiki Kaisha, Tokyo-to, Japan, a corporation of Japan
Filed June 18, 1965, Ser. No. 465,016
Claims priority, application Japan, June 20, 1964, 39/48,669
8 Claims. (Cl. 95—10)

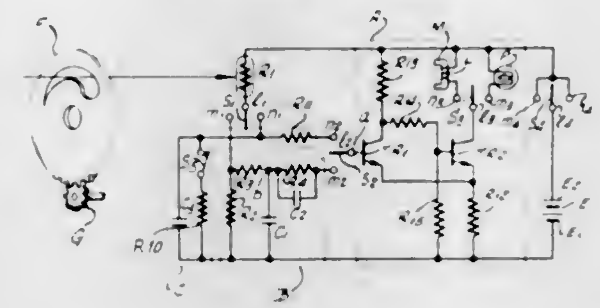

A camera shutter timing network and light indicator includes a multivibrator switch whose output is alternatively selectively connected to a shutter closing electromagnet or an incandescent signal lamp forming a component of the multivibrator. The input to the multivibrator is alternatively connected, concurrently with the output selection, to a timing network including a photoconductor and charging capacitor, or to a signal network including the photoconductor. The signal network, signal lamp and multivibrator components are of such values that different steady state or varying light indications are provided by the lamp in accordance with the light incident in the photoconductor.

3,397,630
DIAZOTYPE COPYING APPARATUS
James L. Pratt, Jr., Saugerties, N.Y., assignor to GAF Corporation, a corporation of Delaware
Filed June 15, 1965, Ser. No. 464,101
6 Claims. (Cl. 95—75)

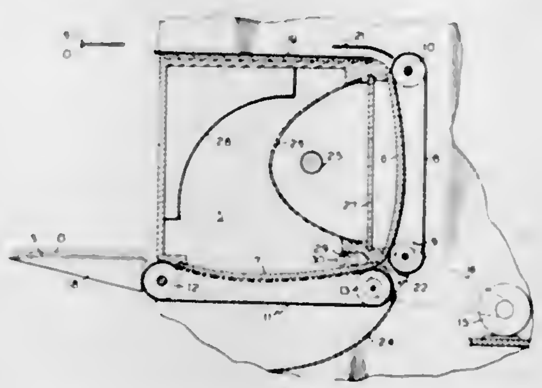

A single radiation source having a wide spectral energy range is used to supply both ultraviolet and infrared radiation. The apparatus permits the separation of the ultraviolet and infrared light, so as to direct each to a separate sheet support area. A conveyor belt passes the sensitized material and the original in conjunction past the supports. A dichroic reflector and a dichroic filter are used in conjunction for directing the ultraviolet and infrared radiation along different paths.

3,397,631
AIR CURTAIN USING IONIZED AIR
Edward W. Simons, Mill Valley, Calif., assignor to Dualjet Corporation, Mill Valley, Calif., a corporation of California
Filed Aug. 1, 1966, Ser. No. 574,885
11 Claims. (Cl. 98—36)

A body of gas, like a curtain, is moved across and adjacent to at least one side of a body of gas in a predetermined area, at least one boundary of which is the gas of said curtain. Atmospheric air is at the opposite side of said curtain from the gas in said area. The gas of one of said bodies is ionized to provide a surplus of ions of one

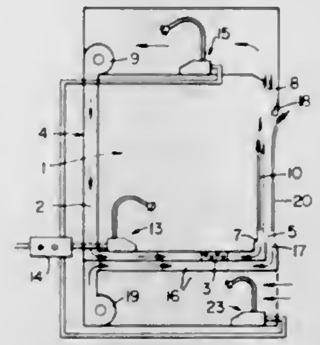

sign therein relative to the ions in said atmosphere to reduce friction between said bodies. Apparatus is provided to form said curtain, move it and ionize one of said bodies.

3,397,632
FISH SMOKER
Richard W. Moler, 713 Hardy Drive, Broderick, Calif. 95605
Filed Aug. 5, 1966, Ser. No. 570,604
6 Claims. (Cl. 99—259)

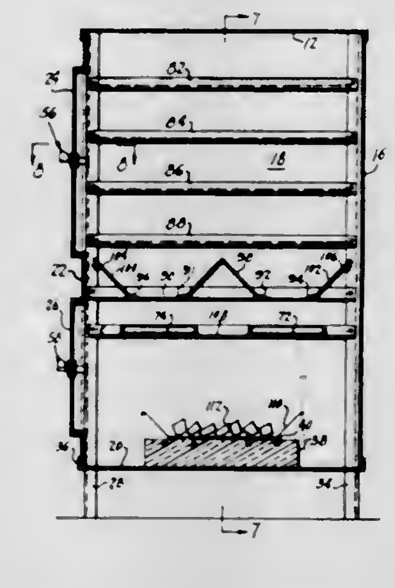

A fish smoker having drip deflecting vanes mounted beneath fish supporting grids for channeling drippings into pans mounted beneath the vanes. Wood smoke rises around the pans and through openings between the vanes while grease drippings are caught by the pans.

3,397,633
HEAT SEALING DEVICE
Robert Harris, 1 Fairchild Drive, Bethel, Conn. 06801
Filed Oct. 15, 1965, Ser. No. 496,624
3 Claims. (Cl. 100—93)

Heat sealing of plastics along narrow sealing lines is effected with a device provided with two narrow dies between which the plastic to be sealed can pass. The dies are provided with means to bring them into contact with the plastic. At least one of the dies is in heat exchanging relation with a Peltier module. When the dies are brought together, current flows through the Peltier module in a direction to heat it and hence the narrow sealing die. When a sufficient temperature is reached to seal the plastic, temperature sensing means, such as a thermistor, reverses the current through the module to cool it off, and

after it has reached a low enough temperature the dies are separated. More rapid cooling can be effected by having

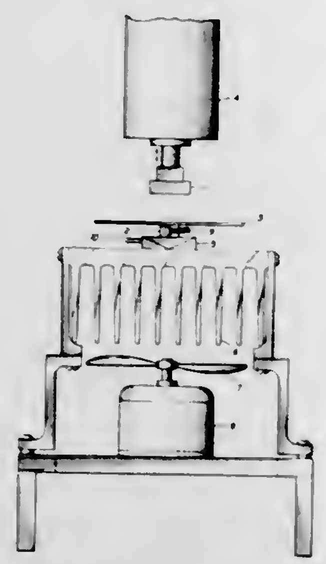

the Peltier module in contact with a finned heat sink over which cooling air can be blown.

3,397,634
REGISTRATION CONTROL SYSTEM FOR PREPRINTED WEB INSERTION
Minford E. Betts, Odessa, Mo., and Richard L. Hatton, Fairway, Kans., assignors to The Kansas City Star Company, Kansas City, Mo., a corporation of Missouri
Filed Sept. 13, 1965, Ser. No. 486,726
6 Claims. (Cl. 101—248)

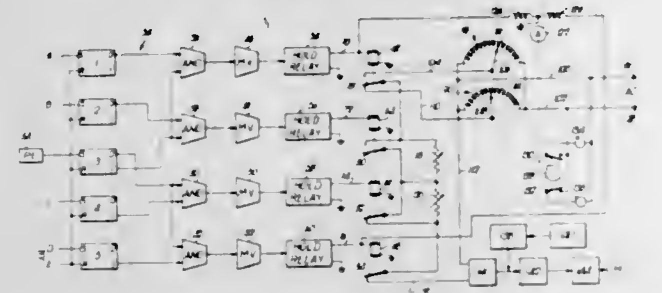

A preprinted web insetter for a rotary letterpress derives a pair of time spaced reference signals from the line shaft of the press during each revolution of such shaft. The register marks on the preprinted web are sensed as each mark passes a photoelectric scanner. The two reference signals define a primary control interval for assuring proper registration of the web with the printing operation. If the output from the scanner occurs prior to initiation of the first reference signal, then the tension of the web is increased; conversely, the web tension is decreased if the second reference signal is initiated prior to sensing of the mark by the scanner. In this manner, lead and lag conditions are compensated to assure proper registration, a condition existing when the scanner output occurs during the control interval. Additionally, in instances where the degree of misregistration is quite severe, a highly responsive corrective action is taken by the provision of supplemental control intervals bounding the beginning and the end of the primary control interval.

3,397,635
RELEASE DEVICE FOR LAND MINES
Paul Madlener, Karlsruhe-Durlach, and Otto Pecksen, Herrenalb, near Karlsruhe, Germany, assignors to Industrie-Werke Karlsruhe Aktiengesellschaft, Baden, Germany, a corporation of Germany
Filed Mar. 18, 1966, Ser. No. 538,466
Claims priority, application Germany, Mar. 27, 1965, J 27,791
5 Claims. (Cl. 102—8)

A release device for land mines in which two elastic and liquid-filled hoses extend outwardly from diametrically opposed points of a housing containing a spring actuated firing pin and two independent lever systems, both of which normally hold the firing pin in an inoperative position. Only when both lever systems are operated simultaneously by the pressure developed in both said liquid-

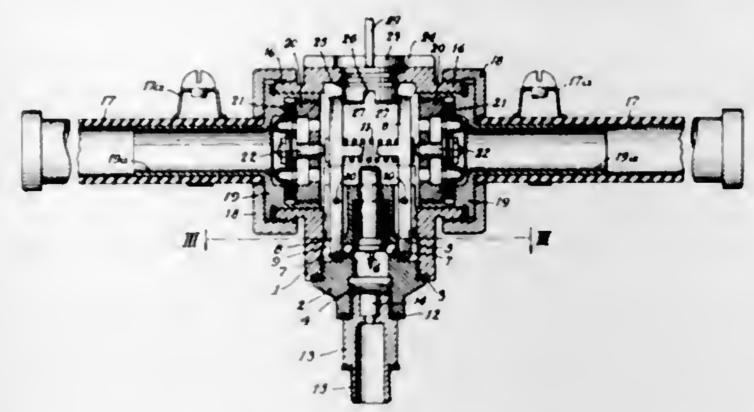

filled hoses when a vehicle with both its tracks passes over the release device the firing pin is released.

A rotatably mounted safety member is attached to the housing above the two-lever systems and in one position prevents an operation of the lever systems which would release the firing pin and in another position permits an operation of said lever systems to release the firing pin.

3,397,636
WEAR REDUCTION ADDITIVES
David Esriel Jacobson, Stockholm, and Stig Yngve Ek, Vallingby, Sweden, assignors, by mesne assignments, to Wegematic Corporation, New York, N.Y., a corporation of Delaware
Continuation of application Ser. No. 377,278, June 23, 1964. This application Mar. 22, 1967, Ser. No. 625,269
42 Claims. (Cl. 102—38)

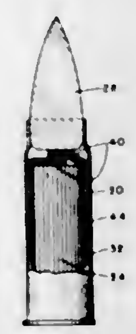

The reduction of the erosion caused in gun barrels of relatively large caliber by associating an additive with the propellant charge. The additive is a finely divided, powdery, metal-containing inorganic substance capable of producing a temperature and erosion resistant layer on the inside of the gun barrel while the hot propellant gases flow therethrough without causing a material rise in the temperature of the gases. The additive is employed in an amount sufficient to produce the temperature and erosion resistant layer over the entire length of that portion of the gun barrel which is subject to erosion.

3,397,637
COMBUSTIBLE AND CONSUMABLE CARTRIDGE CASES
Jack Bobinski, Mountain Lakes, and Yvon P. Carignan, Washington, N.J., assignors to the United States of America as represented by the Secretary of the Army
Filed Feb. 8, 1967, Ser. No. 614,747
2 Claims. (Cl. 102—38)

An ammunition round wherein the propellant contained therewithin is surrounded by a combustible and consumable case comprising one of many cellulose derivatives.

The consumable case is mounted around a sleeve which contains the propellant, the sleeve having one end fitted within a base plug, and a projectile is mounted within the other end. The consumable case will have a thickness ap-

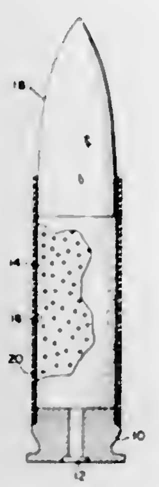

proximately three times greater than that of the sleeve, and the nitrate, acetate, hydroxy and methoxy groups of the consumable case material are held within certain prescribed limits.

3,397,638
ROCKET LAUNCHER
Bert B. Gould, Berkeley, Calif., assignor to MB Associates, a corporation of California
Filed Mar. 8, 1961, Ser. No. 94,383
2 Claims. (Cl. 102—49.4)

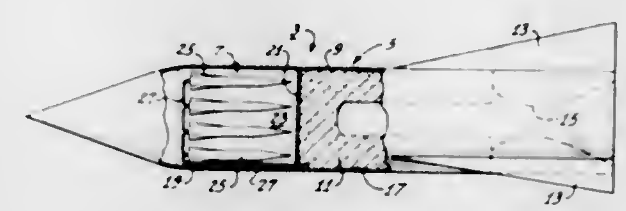

1. In a multiple stage compartmentized rocket having a first stage aft compartment portion provided with a propellant grain and a second stage forward compartment portion separated therefrom by a substantially imperforate transversely extending wall, a plurality of longitudinally extending rockets in said second stage forward compartment arranged for firing through said first stage aft compartment portion in a direction opposed to the travel of the rocket created by the firing of the first stage portion, the combination including a burnable fuse means extending forwardly from the first stage aft portion and connected to the rockets in the second stage forward portion, said fuse means being arranged to be ignited only after the propellant grain in the aft portion is burning in the area adjacent to the imperforate wall.

3,397,639
REINFORCED IGNITION TUBE
Sterling W. Alderfer, Akron, Ohio, assignor to Sterling Alderfer Company, Akron, Ohio, a corporation of Ohio
Filed Jan. 3, 1967, Ser. No. 606,970
5 Claims. (Cl. 102—70)

A method for making and a specific construction of a munitions ignition tube. A complete ignition tube is a composite of straight and belled, tubular sections of rigid urethane foam reinforced, in proximity to their radially outer surface with a sleeve of diagonally woven strands of polyester filaments. The sleeve is inserted in the mold and axially compressed so that it radially expands against

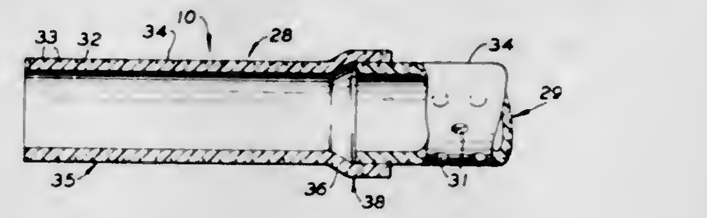

the mold wall. The foam is rigidified to a desired wall thickness with the sleeve thus positioned.

3,397,640
FUZE WITH IMPROVED TIME DELAY AND SELF-DESTRUCT MECHANISM
Richard T. Ziemba and John W. Wolf, South Burlington, Vt., assignors to General Electric Company, a corporation of New York
Filed Oct. 28, 1966, Ser. No. 590,432
2 Claims. (Cl. 102—71)

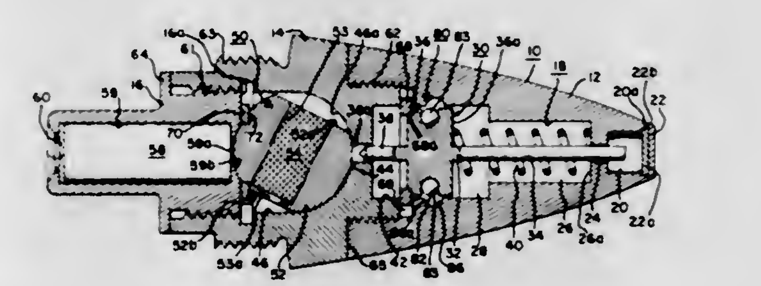

The time-delayed fuze has a centrifugally operated ball and race safing mechanism controlling a spring-loaded firing pin, a ball-rotor type detonator, a pair of centrifugally actuated detent split-rings engaging the ball rotor and a collar on the firing pin, respectively, and a self-destruct mechanism including a ball and groove arrangement between the collar and the fuze housing. As the ball rotor is unlocked during spin the alignment of the ball rotor detonator is controlled by a viscous medium in the ball rotor cavity interacting with irregularities on the ball rotor surface.

3,397,641
SPIN-ACTUATED APPARATUS
Edwin Nathan Gerick, Phoenix, Ariz., assignor to Motorola, Inc., Franklin Park, Ill., a corporation of Illinois
Filed June 12, 1967, Ser. No. 645,453
8 Claims. (Cl. 102—79)

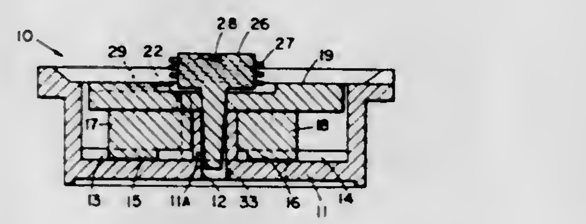

Spin actuated apparatus having a base plate with a spin axis and two weights radially movably disposed on one diameter of the base plate. A rotor cammingly engages the weights and yieldably urges the weights radially inward. As the base plate spins on the spin axis, the weights are urged radially outward by centrifugal force and thereby rotating the rotor against the yieldable urging. Such rotation moves the rotor from a safe or deactivated position to a second rotational position which is an armed or activated position.

3,397,642
METERING PUMP
Raymond M. Petrucci, Waterbury, and Theodore C. De Paola, Meriden, Conn., assignors to American Machine & Foundry Company, a corporation of New Jersey
Filed Nov. 18, 1966, Ser. No. 595,479
6 Claims. (Cl. 103—38)

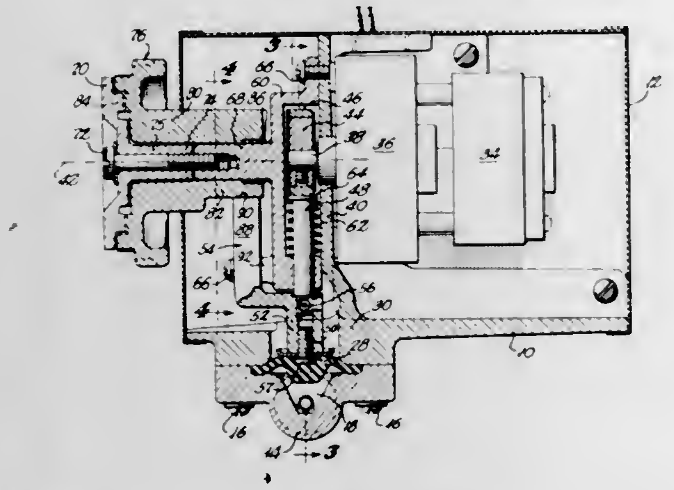

A pump for metering small quantities of chemicals in a liquid feed including a piston-pump, motor means for operating the pump and means for adjusting the stroke of the piston.

3,397,643
SUBMERGED MOTOR RECIPROCATING WELL PUMP
Henry E. Jepsen, 10902 S. La Serna Drive, Whittier, Calif. 90604
Filed Mar. 13, 1967, Ser. No. 622,492
8 Claims. (Cl. 103—46)

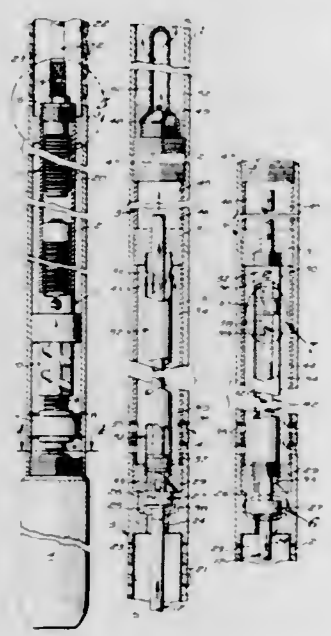

A submersible electric motor-screwshaft driven reciprocable pump having single inlet and discharge ports, a charging chamber and a pumping chamber so related that the load is approximately equal during both strokes of the pump.

3,397,644
PUMP
Amos M. Einerson and Harold W. Pruner, Mansfield, Ohio, assignors to Barnes Manufacturing Co., Mansfield, Ohio, a corporation of Ohio
Filed Sept. 20, 1966, Ser. No. 580,636
4 Claims. (Cl. 103—103)

A water pump having a bearing and journal structure for withstanding abrasion and corrosion from sandy water. The pump includes a housing with an internal impeller drive shaft support having an aperture receiving an impeller drive shaft. A bearing journal is secured to the impeller shaft. A bearing is disposed in the aperture, said bearing containing a longitudinal aperture encasing the journal, whereby the shaft, with the journal secured thereto, rotates within the bearing. The bearing is interlocked in the drive shaft support aperture by means of

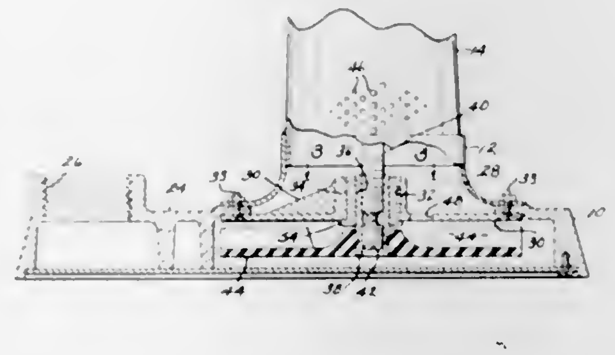

splines formed on the bearing outer surface, and which interlock in coacting slots in the longitudinal wall of the support aperture. Such bearing is formed of a synthetic organic plastic such as an elastomeric polyurethane material, and the journal is preferably formed of either stainless steel or tungsten carbide.

3,397,645
FLUID PUMP OR MOTOR
Bruce H. Mosbacher and George W. Nelson, Rockford, Ill., assignors to Roper Industries, Inc., Rockford, Ill., a corporation of Illinois
Filed May 31, 1966, Ser. No. 553,878
17 Claims. (Cl. 103—126)

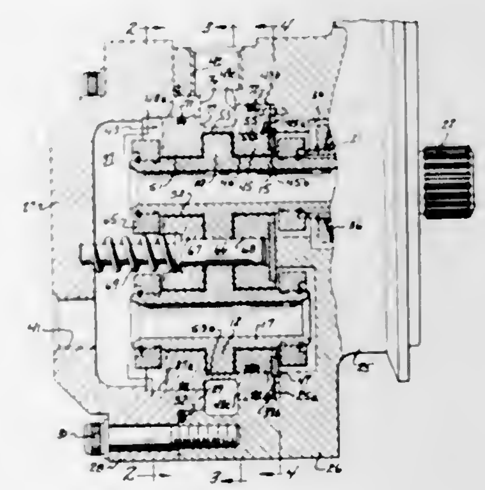

A gear pump or motor in which the gears are enclosed in a pump cartridge movable in the pump housing and including a pressure loading end plate at one end of the gears and a gear case rigid with the end plate and extending in close running fit with the gear peripheries. A pressure motive surface is formed on the gear case at a location forwardly of the end plate so that the pressure applied to the motive surface pulls the end plate into close running fit with the end faces of the gears. The gears are preferably arranged in a cluster of four with alternate inlet and discharge zones around the gear cluster, and the discharge passage is formed to extend completely around the gear case to communicate the several discharge passages with the pump outlet and to also provide a radially balanced pressure around the gear case.

3,397,646
PULSED METERING DEVICE
William C. Allsopp, Jr., 42 Beverly Place, Little Rock, Ark. 72207
Filed May 31, 1966, Ser. No. 554,156
10 Claims. (Cl. 103—149)

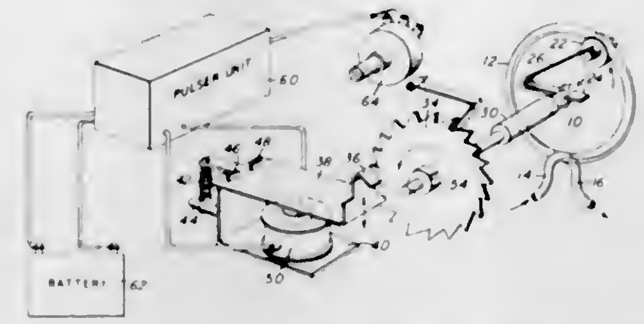

A metering device for dispensing insecticide into flowing irrigation water is provided. A peristaltic pump is intermittently driven by an electric step motor which includes a ratchet and pawl mechanism. The ratchet is mounted on the pump shaft, while the pawl is energized by a solenoid driven by a pulsing circuit which includes a capacitor discharge network. A constant current source provides a linear charge for the capacitor; when the charge reaches a predetermined value, a controlled switching device is made conductive to energize the solenoid. Additional means are provided to thereafter turn off the controlled switching device and de-energize the solenoid, completing the step.

3,397,647
CONVERTIBLE PUMP
William H. Daniel, 411 Daniel Bldg., Tulsa, Okla. 74103
Filed May 19, 1967, Ser. No. 639,725
6 Claims. (Cl. 103—218)

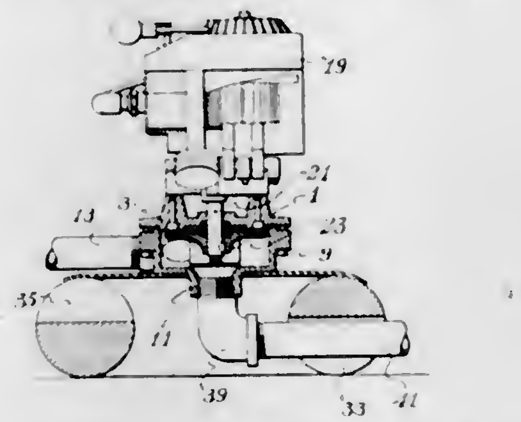

A pump is convertible to and from floating operation and dry base operation. A float is provided that carries a support, and the pump is selectively detachably connectible to opposite sides of the support so as to have two positions axially displaced from each other relative to the float. In the position for floating operation, the pump and its intake are desirably low in the water; but in the position of dry base operation, the pump is suitably elevated so that its intake is supported at a desirably high elevation by the float.

3,397,648
SUCTION PUMP
Stanford A. Henderson, Snyder, N.Y., assignor to Gomco Surgical Manufacturing Corporation, Buffalo, N.Y., a corporation of New York
Continuation of application Ser. No. 496,894, Oct. 18, 1965. This application Apr. 17, 1967, Ser. No. 631,567
9 Claims. (Cl. 103—236)

A suction pump including a pump chamber with a resistance heating element therein and control means for alternately energizing and de-energizing the heating element to cause gases to flow into said chamber through a first conduit having a first check valve and to flow from said chamber through a second conduit having a second check valve, with a porous metal filter in said second con-

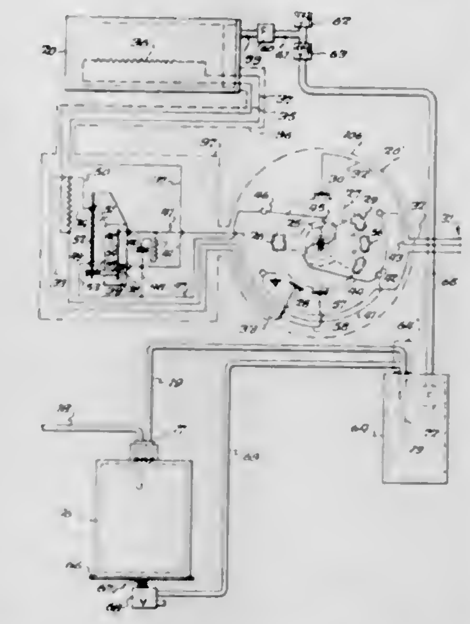

duit and with both said chamber and said control means being within housings which are explosion proof and flame proof, and shielding conduit means for shielding various electrical lead means from the atmosphere.

3,397,649
TRANSPORT SYSTEM FOR PASSENGERS AND GOODS
Fritz Pfeffer, Renngasse 6, Vienna, Austria
Filed Dec. 1, 1965, Ser. No. 510,569
Claims priority, application Austria, Dec. 2, 1964, A 10,219/64; Feb. 4, 1965, A 975/65; Apr. 7, 1965, A 3,155/65
12 Claims. (Cl. 104—28)

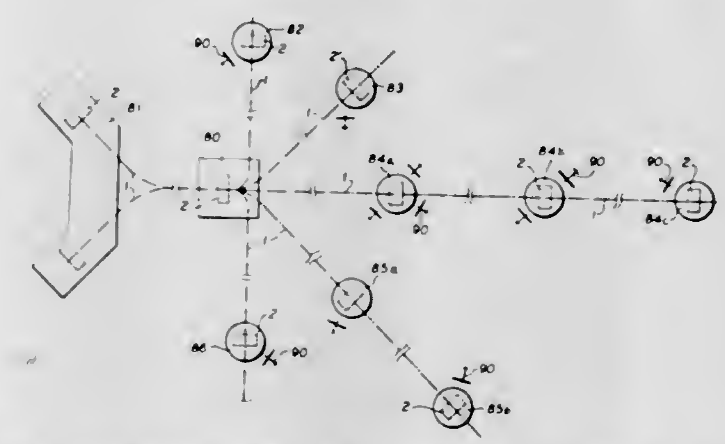

A transport system for passengers and goods to be moved in a substantially horizontal direction comprising at least two spaced apart stations, at least two substantially horizontal track means disposed substantially parallel to one another between at least the two spaced apart stations, at least one vehicle means movable independently along each of the track means, and including means for driving each of the vehicle means and control means for initiating, terminating and correlating the driving means and operations of the vehicle means on each of the substantially horizontal track means. A block means is provided at each station for permitting entrance to and exit from, respectively, each of the vehicle means on each track means, and each of the block means extends transversely across the at least two substantially horizontal track means. Access and discharge means for passengers are provided comprising a bank of adjacent doors in each of the block means, which doors are substantially aligned transversely to the direction of the track means, and each door associated independently with one of the track means for use with vehicles on that track.

3,397,650
BRAKING DEVICE FOR POWER AND FREE CONVEYOR CARRIERS
Louis Kondur, Birmingham, and Clarence A. Dehne, Orchard Lake, Mich., assignors to Jervis B. Webb Company, a corporation of Michigan
Filed Oct. 24, 1966, Ser. No. 588,959
12 Claims. (Cl. 104—172)

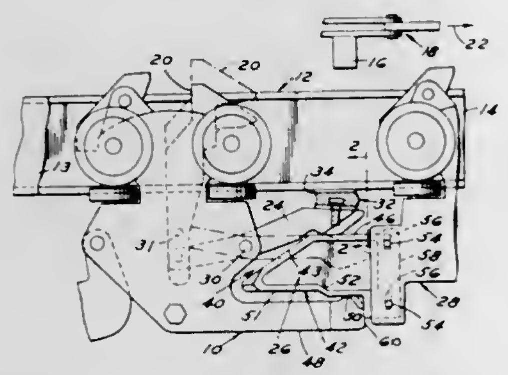

1. A conveyor carrier of the type which is propelled along a supporting track by a pusher on a driven chain engaging a driving dog on the carrier, the driving dog being movable from a driving to a non-driving position in response to movement of a dog releasing member on the front of the carrier resulting from engagement of the dog releasing member with an actuating member on the rear of a preceding overtaken carrier, characterized by brake means carried by the dog releasing member, the actuating member having cam means adapted to move the dog releasing member to a released position and the brake means into frictional contact with the carrier supporting track.

3,397,651
MEANS FOR STEERING AN UNATTENDED VEHICLE ALONG A TRENCH
Anthony R. Biedess, Chicago, Ill., assignor to Westinghouse Air Brake Company, Pittsburgh, Pa., a corporation of Pennsylvania
Filed Apr. 25, 1966, Ser. No. 544,978
4 Claims. (Cl. 104—244.1)

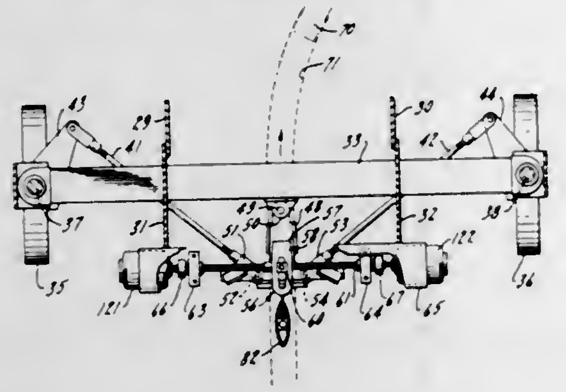

An apparatus for steering a conveyor unit along a course defined by a trench and having a follower assembly pivotably attached to the conveyor unit for engaging and following the trench and a switch which opens and closes a first and second circuit in response to relative movement between the conveyor unit and the follower assembly. The first and second circuits control clutches operative to engage steering motors with a steering screw.

3,397,652
RAILWAY TRUCK BOLSTER DAMPENER
Lloyd Cardwell, Chicago, Ill., assignor to Cardwell Westinghouse Company, a corporation of Delaware
Filed Aug. 9, 1966, Ser. No. 571,310
19 Claims. (Cl. 105—193)

Railroad car sidesway is counteracted without interfering with vertical motion of the car by connecting each side frame of the car truck to the bolster through linkage which in turn is connected to an energy absorption and dissipa-

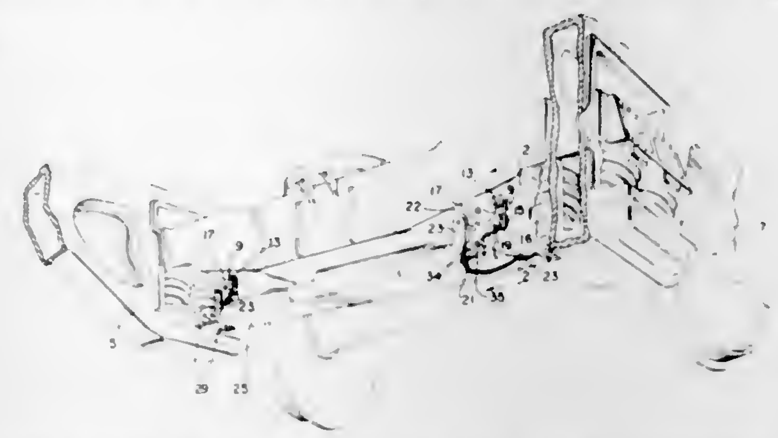

tion device in such manner that the device counteracts sidesway without counteracting vertical motion of the car.

3,397,653
LATERAL MOTION BEARING ADAPTER
Ray C. Williams, Chicago, Ill., assignor to Standard Car Truck Company, Chicago, Ill., a corporation of New Jersey
Filed Mar. 10, 1966, Ser. No. 533,206
2 Claims. (Cl. 105—218)

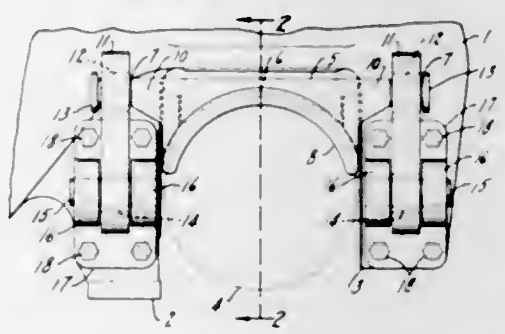

An anti-friction bearing adapter for railroad cars includes a flat plate, the width of which is substantially equal to the width of the window defined by pedestal legs depending from a railroad car truck frame. A concave saddle depending from the plate, interlocking with and cradling an anti-friction bearing housing to positively prevent contact of the housing with the pedestal legs. Webs projecting outwardly from all four corners of the plate on both sides of a railroad car frame. A bearing pin carried by each web. A hanger link pivoted on each pin. Pivot pins on the pedestal legs so that the window is unobstructed.

3,397,654
SLIDING HOPPER GATE OPERATING MECHANISM
Samuel J. Snyder, Long Island City, N.Y., assignor to ACF Industries, Incorporated, New York, N.Y., a corporation of New York
Filed Feb. 10, 1967, Ser. No. 615,130
8 Claims. (Cl. 105—305)

The high force often required to open the sliding gate of a hopper of a railroad car or the like is supplied by a cam fixed to the same shaft as is the pinion of a rack and pinion drive for the gate, the cam and the pinion being enabled to turn at the same rate by a lost motion connection between the rack and the gate. Should the gate become stuck at an intermediate point of its travel, the lost motion connection permits an impact to be applied to the gate to restart its movement.

3,397,655
MACHINE FOR FORMING FLOUR TORTILLAS
Heliodoro Valadez, 7400 Alpine Drive 79915, and Rodolfo Perez, 400 W. Franklin Ave. 79901, both of El Paso, Tex.
Filed Dec. 14, 1966, Ser. No. 601,691
10 Claims. (Cl. 107—15)

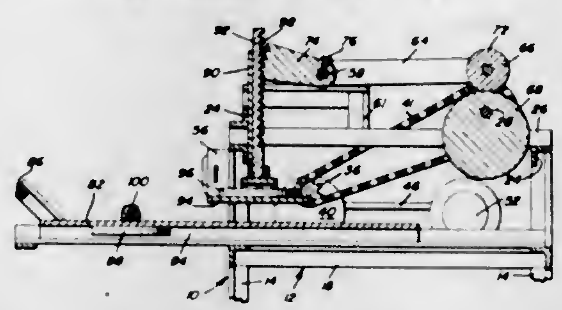

A machine provided with first and second hot plate members and supported from a frame for oscillatory movement along intersecting paths disposed at generally right angles to each other and which include heated opposing and generally planar surfaces between which a lump or ball of dough may be flattened and at least partially surface cooked upon final movement of one of the hot plates towards its limit position of movement toward the intersection of the paths of movement of the hot plates subsequent to final movement of the other hot plate towards its limit position of movement toward the intersection of the paths of movement of the hot plates.

3,397,656
MECHANISM FOR AUTOMATICALLY CONTROLLABLY MOVING THE SPECIMEN MOUNTING STAGE OF A MICROSCOPE
Eugene V. Abarotin, 3538 McWilliams Road, Murrysville, Pa. 15668
Filed May 10, 1965, Ser. No. 454,298
12 Claims. (Cl. 108—20)

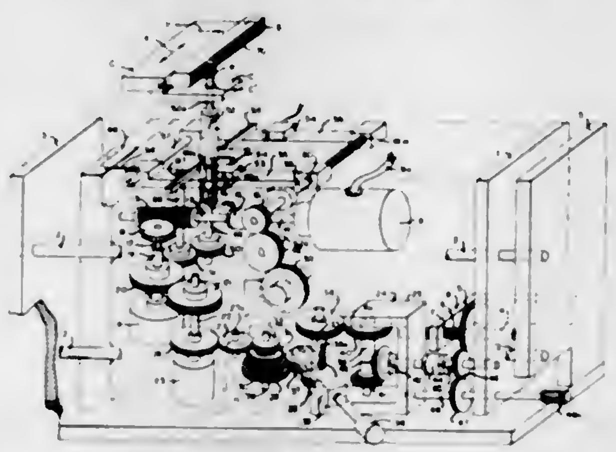

Mechanism for automatically controllably moving the specimen mounting stage of a microscope comprising means connected with the stage acting on the stage to reciprocate it back and forth and simultaneously with and preferably throughout such reciprocatory movement in one direction moving the stage transversely of the direction of back and forth reciprocation whereby the optical train of the microscope covers a predetermined field on the stage in automatically controlled manner. The mechanism preferably includes a housing together with means carried by the housing for reciprocating the stage back and forth and means for moving the housing transversely of the direction of back and forth reciprocation of the stage to correspondingly move the stage. The means carried by the housing for reciprocating the stage back and forth may be a rotatable member mounted in the housing to turn about an axis which is fixed relatively to the housing and connected with the stage to move the stage in its reciprocating back and forth movement upon turning of the rotatable member, the stage being further connected with the rotatable member so that the stage is moved transversely of the direction of the reciprocating back and forth movement upon movement of the housing.

3,397,657
APPARATUS FOR CONTINUOUSLY BURNING WASTES
Mitsuru Tada, 2-17-3 Minamicho, Fuchu, Tokyo, Japan
Filed Oct. 25, 1966, Ser. No. 589,384
Claims priority, application Japan, Nov. 1, 1965, 40/67,092
10 Claims. (Cl. 110—8)

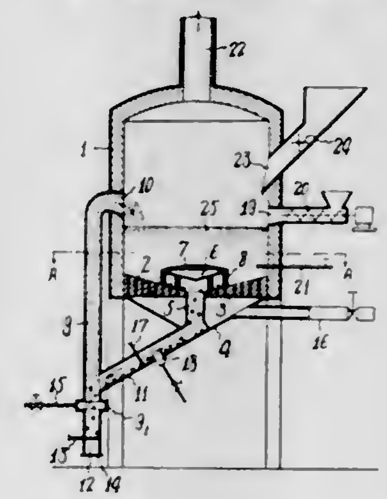

An apparatus for continuously burning the inflammable constituents of a waste material mixture in a bed of a fluidized medium while separating the non-inflammable constituents, is formed of an upright housing containing a transversely arranged flow plate. An outlet is located through the flow plate at the lowermost point of its inclined upper surface. The flow plate has a plurality of nozzles extending through it and communicating with a wind box below the plate. A discharge pipe extends from the outlet in the plate to an aeration pipe located outside the housing. During operation the fluidized medium containing the inflammable and non-inflammable materials flows downwardly on the flow plate, the inflammable materials are burned and the non-inflammable material with the fluidized medium pass through the outlet into the discharge pipe. From the discharge pipe the materials enter the aeration pipe wherein pressurized air separates the non-inflammable material from the fluidized medium. The non-inflammable material is removed from the aeration pipe and the fluidized medium flows upwardly through the aeration pipe and returns into the housing. A burner extends into the housing above the flow plate for igniting the inflammable constituents in the bed of fluidized medium.

3,397,658
TOOL BAR CARRIER FOR UNIT PLANTERS
Harold V. Hansen, Cordova, and Roger W. Curry, Port Byron, Ill., assignors to Deere & Company, Moline, Ill., a corporation of Delaware
Filed Nov. 1, 1965, Ser. No. 505,857
10 Claims. (Cl. 111—36)

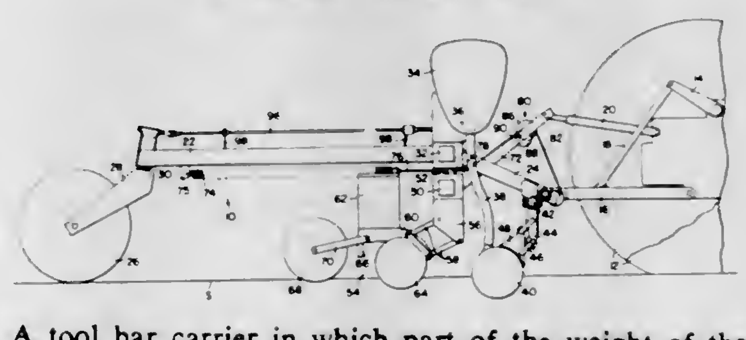

A tool bar carrier in which part of the weight of the carrier is supported by the conventional three-point linkage system of a tractor and another portion of the weight

is supported by ground-engaging means to the rear of the carrier, the tool bar carrier having a transversely extending rotatable tool bar. The tool bar and the carrier are independently connected with the draft links and the compression links of the tractor in such a manner that, as the tool carrier is raised, the tool bar is rotated relative to the frame of the carrier.

3,397,659
NEEDLE COOLING DEVICE
Donald W. Samuels, 8 Green Oaks, Olivette, Mo. 63132
Filed July 20, 1966, Ser. No. 566,645
2 Claims. (Cl. 112—218)

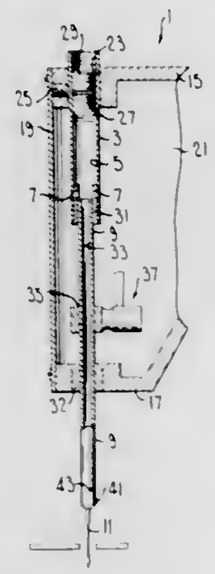

A device for cooling the needle of a sewing machine with blasts of air on upstrokes of the needle, comprising a hollow needle bar functioning as a plunger within a cylinder vertically adjustable for accommodation to needle strokes of various models of sewing machines to which the device may be easily attached, the cylinder having an adjustable plug threaded therein for making the length of the cylinder chamber substantially equal to the length of the needle stroke.

3,397,660
SEWING MACHINE NEEDLE
Julius A. Luther, 5422 Roseland Mound, Cincinnati, Ohio 45212
Filed Aug. 27, 1965, Ser. No. 483,064
4 Claims. (Cl. 112—222)

The needle herein utilizes two thread openings or eyes each for a thread and maintaining the same suitably spaced from one another so that no twisting of the threads takes place during use. This needle may, therefore, be used with substantially all sewing machines for effecting plain sewing or embroidery sewing as desired.

3,397,661
CLOSURE WITH PROTECTIVE COATING AND METHOD OF MANUFACTURE THEREOF
Jack Cullen Allman, Barrington, and Eugene Francis Eike, Crystal Lake, Ill., assignors to American Can Company, New York, N.Y., a corporation of New Jersey
Original application Nov. 30, 1964, Ser. No. 414,731, now Patent No. 3,245,568, dated Apr. 12, 1966. Divided and this application Aug. 16, 1965, Ser. No. 487,954
14 Claims. (Cl. 113—121)

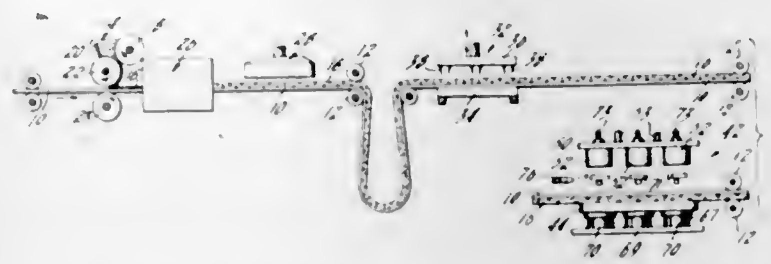

4. A method of producing a blank for an easy-open closure comprising the steps of:
longitudinally feeding a thin metallic web of easily tearable material;
applying a coating of foamable plastisol to one surface of said web;
heating said coated web to fuse and foam said plastisol;
cooling said heated web to solidify said plastisol;
scoring said coated web to form spaced score lines extending through said plastisol coating and into said web; and
punching a closure blank from said web with said closure blank having two spaced score lines extending thereacross.

3,397,662
HATCH ARRANGEMENT FOR LIQUEFIED GAS STORAGE TANKS
Norman K. Basile, Bronx, and Thomas F. Bridges and George R. Knight, Jr., Port Washington, N.Y., assignors to John J. McMullen, Montclair, N.J.
Filed June 28, 1966, Ser. No. 564,487
15 Claims. (Cl. 114—74)

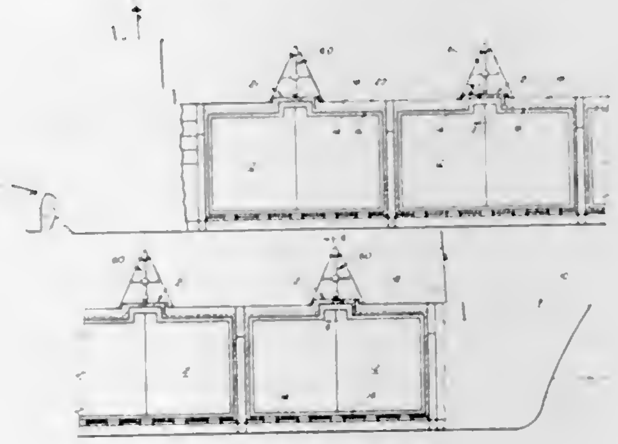

A hatch arrangement for a liquefied gas storage tank wherein the tank is provided with a trunk at its center top with the bottom of the trunk located below the upper deck. Insulation covers the top and sides of the trunk, and a hatch cover supported by insulation encloses an opening in the upper deck and is attached to the top of the trunk and the upper deck by means of a flexible sealing coupling to permit thermal growth of the tank independent of the ship's structure.

3,397,663
METHOD FOR REBUILDING THE HULL OF A SHIP TO INCREASE ITS TONNAGE
Yukiaki Ito, Kobe-shi, Japan, assignor to Mitsubishi Jukogyo Kabushiki, Tokyo, Japan
Filed Mar. 9, 1967, Ser. No. 621,932
Claims priority, application Japan, Mar. 16, 1966, 41/15,755
16 Claims. (Cl. 114—77)

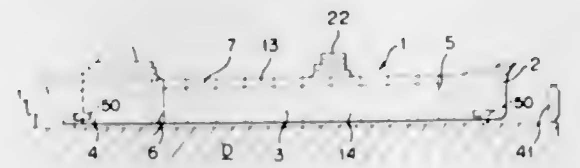

A method of rebuilding the hull of a ship to increase its tonnage comprising the steps of transversely cutting and dividing the hull into a bow portion, a midships portion and a stern portion and further longitudinally dividing the midship portion into a starboard and a port section. After moving the separated parts either longitudinally or transversely away from one another, new structure is disposed between them and the new and existing sections are joined together to form a hull of increased size and capacity. In cutting the hull, the bow and stern sections are separated from the midship portion in the curved or arched side portions of the hull forward and aft of the parallel portion of the midship part of the hull. In addition to increasing the length or width of the various sections, height or depth is added by inserting new sections into various portions of the hull.

3,397,664
VESSEL STABILIZER
John J. Slager, Silver Spring, and William C. Webster, Glenelg, Md., assignors to Hydronautics, Inc., Laurel, Md., a corporation of Maryland
Filed Sept. 16, 1966, Ser. No. 579,888
12 Claims. (Cl. 114—124)

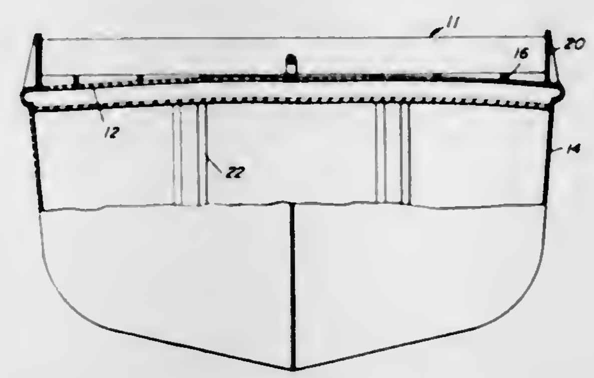

A vessel stabilizer including a mass movable within a substantially gastight tube and dividing it into left and right pressure chambers, resonant spring tuning means normally maintaining the mass centered relative to the pressure chambers, the mass upon movement from center compressing the gas in the chamber in the direction of movement to establish a dampening pressure resisting further movement of the mass.

3,397,665
BOAT ANCHOR
Lee Lindly, 1014 Stewart St., Winfield, Kans. 67156
Feb. 27, 1967, Ser. No. 618,819
5 Claims. (Cl. 114—208)

A boat anchor which will automatically disengage itself from entanglement upon the tension in the anchor line exceeding a predetermined amount by virtue of the anchor having anchor elements retractably pivoted to the body of the anchor, such anchor elements normally being prevented from retraction by a release means slidably mounted on the body. The anchor line is connected to the anchor body and includes a relatively weak portion adjacent the body, and a release line of sufficient

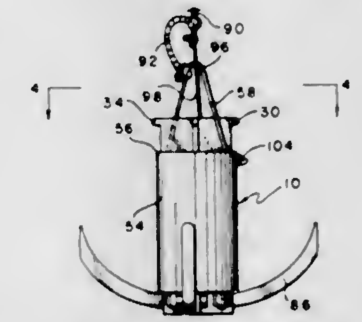

length as to normally be slack bridging the weak portion of the anchor line and connected to the slidable release means, whereby the latter can be pulled to release the anchor elements and recover the anchor upon the breaking of the weak portion of the anchor line.

3,397,666
ANCHOR HOLDER
Stanley M. Gittens, 6345 25th Ave., Kenosha, Wis. 53140
Filed Aug. 3, 1967, Ser. No. 658,212
9 Claims. (Cl. 114—210)

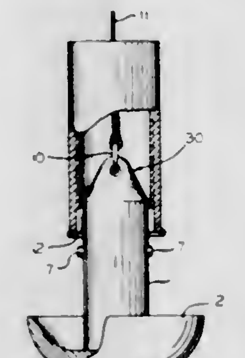

A combination of an anchor and a holder therefor in which the anchor is automatically pivoted into position for longitudinally traversing a substantial portion of the holder for storage therein. The stored anchor is held firmly in place through action of a spring which is extended by interaction between the flange or flukes of the anchor and the holder such that motion of the anchor within the holder is eliminated. Removal of the anchor is automatically effected by raising the anchor and subsequently allowing the action of the extended spring and of gravity to produce the required lowering. This concept of a holder for firmly securing an anchor may be used with specially designed anchors having a spring connection between the shank and the flange or flukes, and, alternatively, can be adapted for use with an anchor of conventional construction.

3,397,667
BARGE AND HITCH THEREFOR
Luther E. Boldery, Bedford, Ky., assignor of one-half to Fred M. Sturm, Lexington, Ind.
Filed Oct. 24, 1966, Ser. No. 589,058
13 Claims. (Cl. 114—235)

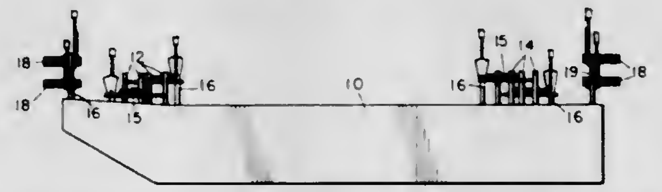

A barge having pairs of timberheads along its sides adjacent its bow and stern with a side hitch mounted adjacent

each pair of said timberheads. Timberbeads are also mounted along its bow and stern, and an end hitch is mounted adjacent said timberheads. Each side hitch has an elongated arm provided with recesses at its outer end and a pair of swingably mounted plates having recesses at their outer ends which, when the plates are in closed locking position define a pair of openings which cooperate with the arm recesses for lockingly engaging a pair of timberheads on an adjacent barge. Each end hitch comprises an arm having a pair of plates swingably mounted thereon and provided with recesses at their outer ends which, when the plates are in closed locking position, define an opening for lockingly engaging a timberhead on an adjacent barge. Means are provided on the arms of each of the side and end hitches for moving the plates thereon between an open position in which the plate recesses are in spaced relation for reception of a timberhead and a closed locking position in which they are locked around a timberhead.

3,397,668
AMPHIBIOUS VEHICLE
Donald N. Mainguy, Montgomery, Ala., assignor of one-half to John S. Andrews, Grenada, Miss.
Filed Apr. 13, 1967, Ser. No. 630,685
15 Claims. (Cl. 115—1)

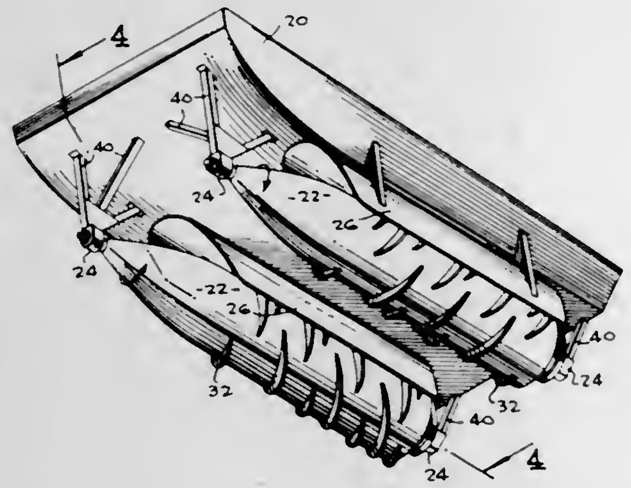

An amphibious vehicle having driven cylindrical pontoons with drive fins extending outwardly from the pontoons and oriented in non-continuous spiral configuration and alternatively including turbine and reaction thrust creating means driven by pressurized fluid from a power means.

3,397,669
AMPHIBIOUS VEHICLE
George Katehis, Miami, Fla.
(General Delivery, Summerland Key, Fla. 33042)
Filed Mar. 30, 1967, Ser. No. 627,213
7 Claims. (Cl. 115—2)

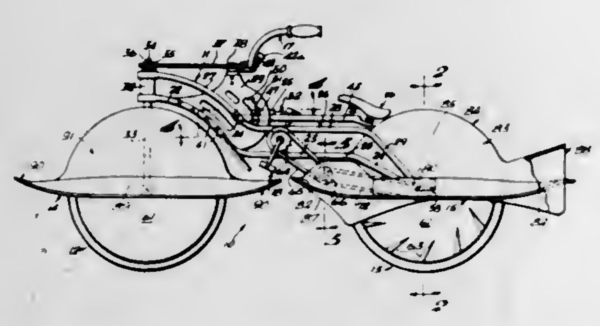

An amphibious bicycle having wheels with ballast means comprising a segment of a disc suspended within the wheels from the axles of the bicycle. Said bicycle also having buoyancy floats extending fore and aft of said wheels and secured to the frame adjacent to said axles.

3,397,670
WATER CRAFT
Timothy J. Bedford, 45 Rosliston Road, Stapenhill, Burton-on-Trent, Staffordshire, England
Filed Feb. 23, 1967, Ser. No. 618,209
Claims priority, application Great Britain, Mar. 1, 1966, 8,810/66
7 Claims. (Cl. 115—70)

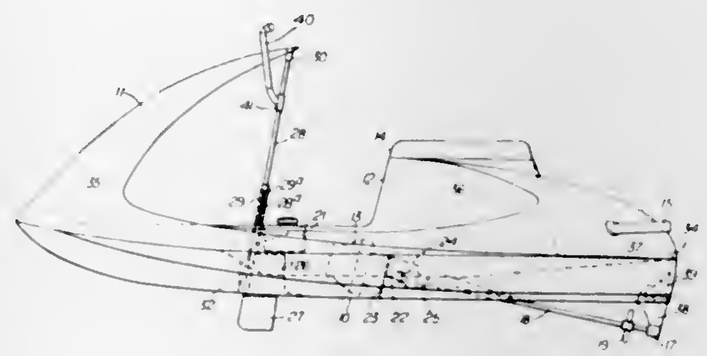

A water craft which can be balanced and steered like a cycle or motorcycle, having steering means at the front and propulsion means at the back.

3,397,671
REMINDER-DISPENSER DEVICE
Maurice D. Hartman, Jr., Harleysville, and Raymond Finkelston, Jr., Philadelphia, Pa., assignors to Sparks Corporation, Harleysville, Pa., a corporation of Pennsylvania
Filed Mar. 22, 1965, Ser. No. 441,449
7 Claims. (Cl. 116—121)

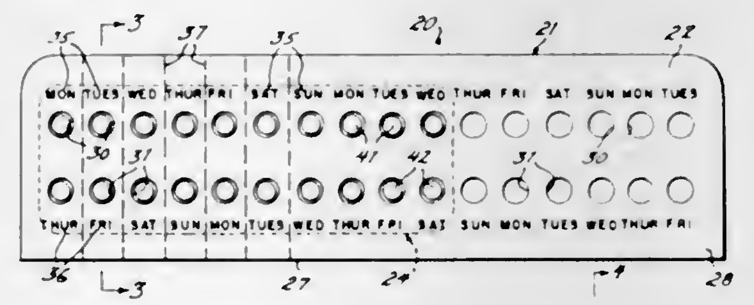

The instant invention is concerned essentially with a reminder-dispenser for pills and the like which includes a holder, a carrier held by the holder, a plurality of individually openable pill pockets on the carrier and accessible when the carrier is held by the holder, and indicia means associated with the holder for selective location relative to the carrier indicating the period of consumption of pills in respective pockets.

3,397,672
CONTROL SYSTEM FOR VAPOR-DEPOSITION COATING APPARATUS
George Dykeman, Dormont Borough, and Frank Slamar, Monroeville, Pa., assignors to United States Steel Corporation, a corporation of Delaware
Filed Nov. 10, 1965, Ser. No. 507,103
10 Claims. (Cl. 118—5)

A plurality of electron guns spaced across the width of a strip traveling through a vacuum chamber, serving to vaporize coating metal in a crucible, are controlled in response to the speed of the strip and the thickness of the deposited coating, to maintain the latter uniform. A differential is maintained between the guns adjacent the strip edges and those nearer the center line, to obtain

uniform deposition transversely of the strip. A second series of guns used for preliminarily degassing the strip,

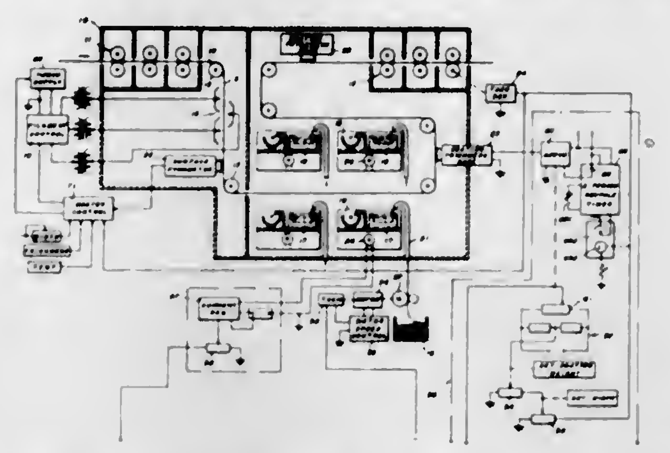

is controlled in accordance with the temperature of strip entering the chamber, to insure proper heating and release of occluded gases.

3,397,673
AIR KNIFE COATING PAN
Ralph P. Mahoney, Beloit, Wis., and Irvin J. Phillips, South Beloit, Ill., assignors to Beloit Corporation, Beloit, Wis., a corporation of Wisconsin
Filed Feb. 14, 1966, Ser. No. 527,248
6 Claims. (Cl. 118—63)

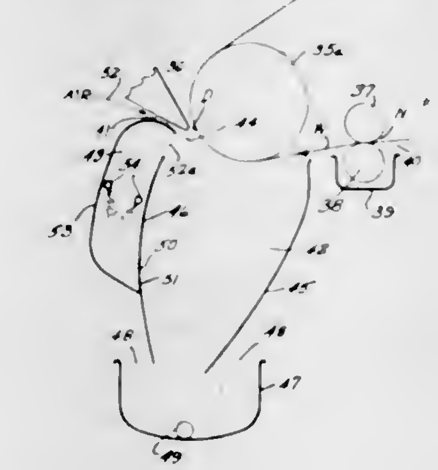

A coating mechanism for coating a traveling web wherein a layer of coating is applied to the web and an air knife smooths the coating. The mechanism is provided with a series of baffled chambers for depositing and collecting the mist formed by the coater with pools of liquid for receiving the collected mist.

3,397,674
STONE APPLICATOR
Albert R. Smith, 625 Robert St., Lansing, Mich. 48910
Filed Aug. 15, 1967, Ser. No. 660,650
9 Claims. (Cl. 118—200)

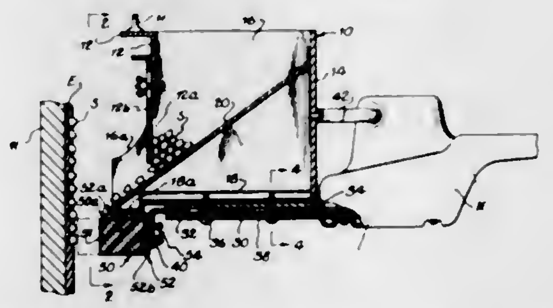

An applicator for applying stones to a vertical wall surface is composed of a hopper for holding stones on an inclined shelf so that the stones can drop out of an opening at the bottom end of the hopper. The stones fall in front of a rapidly reciprocating resilient pusher block which drives the stones against the vertical wall surface.

3,397,675
COATING APPARATUS
John De Ligt, Covington, Va., assignor to West Virginia Pulp and Paper Company, New York, N.Y., a corporation of Delaware
Filed Mar. 13, 1967, Ser. No. 622,691
3 Claims. (Cl. 118—258)

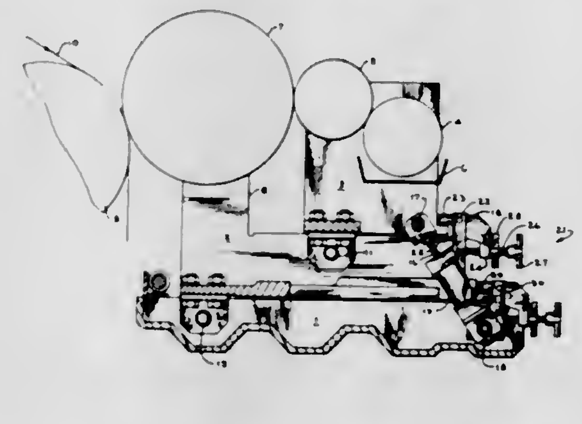

A coating or printing station having its applicator and transfer rolls attached to pivotally mounted supporting frames so that the rolls may be moved into and out of operative position. Adjustable, lost motion stops are provided interconnecting the supporting frames so that the frames may be pivoted serially by means of a single source of power and the operative positions of the rollers preset by adjusting the stops.

3,397,676
EXPERIMENTAL ANIMAL CAGE
George H. Barney, 4038 Albert Drive, Nashville, Tenn. 37204
Filed Sept. 20, 1966, Ser. No. 580,709
10 Claims. (Cl. 119—15)

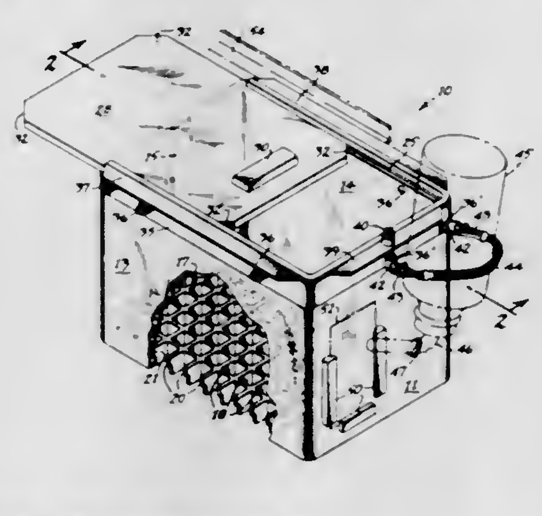

1. A rodent cage comprising:
(a) a housing for receiving a rodent having an endless, solid side wall member of non-metallic material, a bottom wall of non-metallic material and an open top;
(b) said bottom wall having a plurality of vertically extending openings therethrough, uniformly spaced and of a uniform size large enough to permit the free passage of the rodent's excreta, and small enough to support the feet of the rodent,
(c) a solid, impermeable cover panel of non-metallic material adapted to close said open top; and
(d) elongated, parallel runners fixed to opposite outsides of said housing for slidably engaging tracks on a rodent stand to suspend said housing in the rodent stand.

3,397,677
REFUSE BOILER IN COMBINATION WITH A HIGH PRESSURE POWER STATION BOILER
Eugen Moegling, Duisburg-Gross Benbaum, Germany, assignor to Babcock & Wilcox, Limited, London, England, a company of Great Britain
Filed Apr. 21, 1967, Ser. No. 632,592
Claims priority, application Germany, Apr. 21, 1966, D 49,910
6 Claims. (Cl. 122—2)

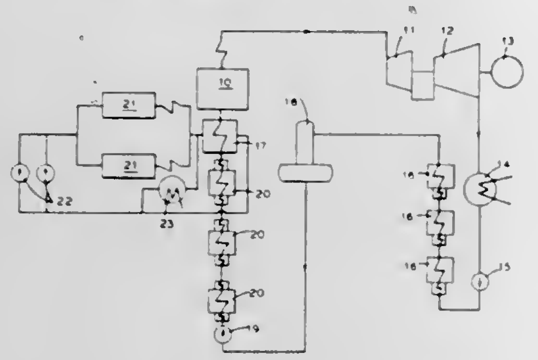

A refuse boiler system connected in parallel operative relationship with a high pressure power boiler system whereby steam generated in the refuse boiler is passed through an indirect heat exchanger to heat the feedwater destined for the high pressure boiler. The two systems operate independently of each other and a stand-by condenser is included to receive the refuse boiler steam in case the power boiler system is shut down. An alternate arrangement shows the refuse boiler steam being delivered to the low pressure stage of the power system turbine.

3,397,678
CONTROLS FOR WASTE GAS COOLING STACKS OF METALLURGICAL FURNACES, OF BOF CONVERTERS, OR THE LIKE
Roland Kemmetmueller, Pittsburgh, Pa., assignor to Waagner-Biro AG, Vienna, Austria
Filed May 4, 1967, Ser. No. 636,104
10 Claims. (Cl. 122—7)

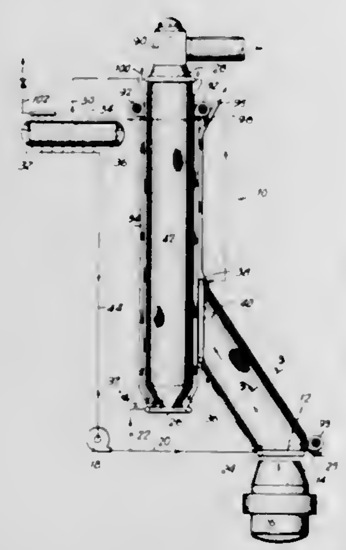

A cooling stack to be used with a metallurgical furnace, a BOF converter, or the like for receiving waste gases therefrom and for conducting the waste gases away. The cooling stack is of the welded water-tube type, and a circulating means communicates with the tubes of the cooling stack for circulating fluid therethrough. The water-tube walls of the cooling stack have an inner surface directed toward the interior of the stack to be engaged directly by the gases therein and an outer surface directed away from the interior of the stack. A control means coacts with this outer surface of the water-tube walls of the stack for controlling the liquid-gas ratio of the fluid in the water-tube walls.

3,397,679
THROUGH-FLOW STEAM GENERATOR CIRCUIT
Frederick J. Hanzalek, Suffield, and Robert A. Kane, Hazardville, Conn., assignors to Combustion Engineering, Inc., Windsor, Conn., a corporation of Delaware
Filed Dec. 20, 1966, Ser. No. 603,219
5 Claims. (Cl. 122—406)

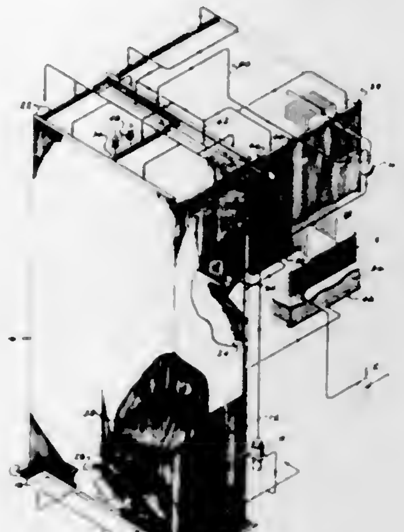

A supercritical steam generator having a furnace with tube lined walls and a tubular dividing wall. A flue conveying combustion products from the furnace with the walls of the flue also lined with tubes. The water through-flow circuit is such that the water passes first through the tubes lining the furnace wall and then in parallel flow through the dividing wall and the tubes lining the flue walls.

3,397,680
REVERSING BLADE ROTARY ENGINE
Joel B. Guin, 148 E. 48th St., New York, N.Y. 10017
Filed Apr. 19, 1966, Ser. No. 543,679
3 Claims. (Cl. 123—11)

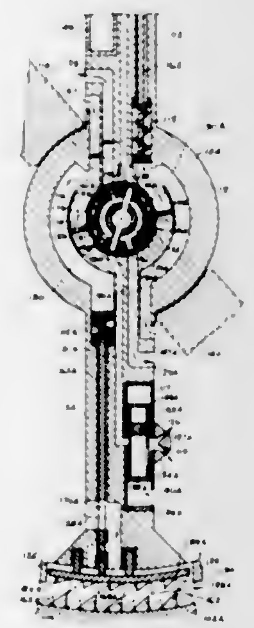

This invention relates to an improvement in rotary internal combustion engines having a shaft, piston means and housing means, in which the piston means consists of two intersecting pairs of half blades, one pair rigidly mounted on opposite sides of a valve-containing annular shaped mid-section rotatably mounted on said shaft, and

attached at two diametrically opposed places on the inside of an annular ring disposed around both pairs of half blades, the second pair being disposed on opposite sides of the mid-section from which they extend radially to said annular ring and being rigidly mounted on left and right to the walls of two circular plates rotatably mounted on the shaft to the left and right of the mid-section so as to complete, along with the adjacent arc of the annular ring and the two half-blades on either side, the four chambers in which the four strokes of the diesel cycle—combustion (work), exhaust, intake (suction) and compression—take place simultaneously all four strokes taking place successively in each chamber. Channel means for introducing fuel and air (and water in one modification) and for exhausting combustion products, valve means for controlling the flow through the channels into and out of the four chambers, and bearing means, are disposed in the shaft, the mid-section and one or both pairs of half-blades. Injection means for fuel or fuel, water and air, are mountable either within the mid-section or one of the half-blades, the use of water with the latter injection means helping to improve combustion, decrease noxious combustion products, cool and clean the engine.

3,397,681
ELECTRICAL OPERATION OF VALVES FOR INTERNAL COMBUSTION ENGINES
James W. Northrup, 841 Azalea Way, Vacaville, Calif. 95688
Filed Nov. 14, 1966, Ser. No. 594,065
3 Claims. (Cl. 123—90)

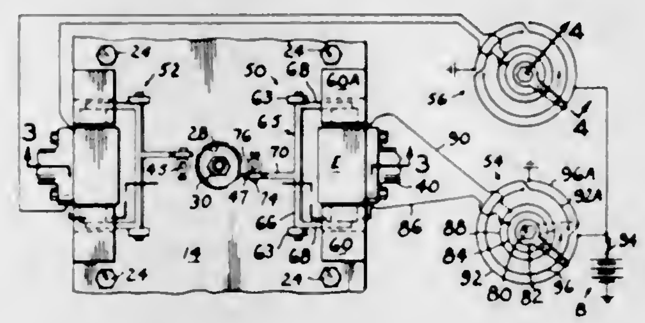

A pair of permanent horseshoe magnets are mounted on the head of an internal combustion engine near the stem of each valve. The respective end portions of an electromagnet extend into the air gaps of the horseshoe magnets. A bell crank lever mounted on the engine head connects the electromagnet to the valve stem. The electromagnet is connected to a timer, driven by the engine, which alternately reverses the direction of current and polarity of the electromagnet. The electromagnet is thus alternately raised and lowered by magnetic attraction and repulsion which opens and closes the valve.

3,397,682
APPARATUS FOR EXHAUST GAS SEPARATION
Homer D. Riggan, 4501 SE. 22nd St., Oklahoma City, Okla. 73115
Filed Nov. 25, 1966, Ser. No. 596,867
8 Claims. (Cl. 123—119)

1. In an exhaust system for internal combustion engines which includes a fuel input system, an exhaust manifold, a first exhaust pipe connected thereto, cyclone means connected to said first exhaust pipe, a muffler system, second exhaust pipe means connecting said cyclone means and said muffler system, and an input conduit connected from the cyclone means to the fuel input system of the internal combustion engine, said cyclone means comprising:

a cylinder having an opening tangential to the cylinder inner wall and connected to receive exhaust gases therein from said first exhaust pipe, said cylinder having an outlet opening along its central axis which is connected to said second exhaust pipe, and a portion of the cylinder wall being foraminous to allow the passage of heavier components of exhaust gas therethrough;

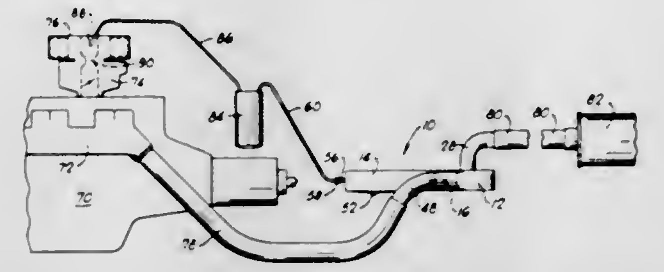

a generally box-like chamber sealingly connected to said cylinder such that said foraminous cylinder wall portion forms a part of said enclosure, said chamber having an exit opening from an upper extremity thereof which communicates with said input conduit.

3,397,683
IGNITION APPARATUS
Roy Phillips, P.O. Box 1716, Ormond Beach, Fla. 32074
Filed Feb. 25, 1966, Ser. No. 530,183
8 Claims. (Cl. 123—148)

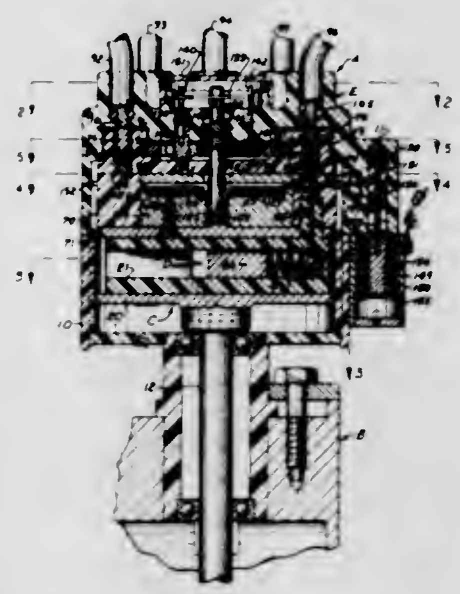

An ignition system for an internal combustion engine including a distributor having at least one contact flush with a smooth annular internal surface thereof adapted to be electrically connected with a spark plug of the engine, a rotatable generator assembly having a smooth surface in sliding engagement with the annular surface of the distributor and provided with a flush contact which momentarily engages the contact carried by the distributor upon rotation of the generator assembly, piezoelectric elements carried by the generator assembly and electrically connected to the contact of the generator assembly, and means for periodically and simultaneously squeezing and relaxing the piezoelectric elements in timed relation to rotation of the engine.

3,397,684
PROCESS AND APPARATUS FOR FACILITATING THE STARTING OF DIESEL ENGINES AND THE LIKE
Hans O. Scherenberg, Stuttgart-Heumaden, Germany, assignor to Daimler-Benz Aktiengesellschaft, Stuttgart-Unterturkheim, Germany
Filed Dec. 15, 1965, Ser. No. 514,059
Claims priority, application Germany, Dec. 15, 1964, D 46,056; Feb. 25, 1965, D 46,607
6 Claims. (Cl. 123—179)

A supercharged diesel engine with a combustion air

cooler for removing the heat of compression of the supercharger and a preheater for heating all of the combustion

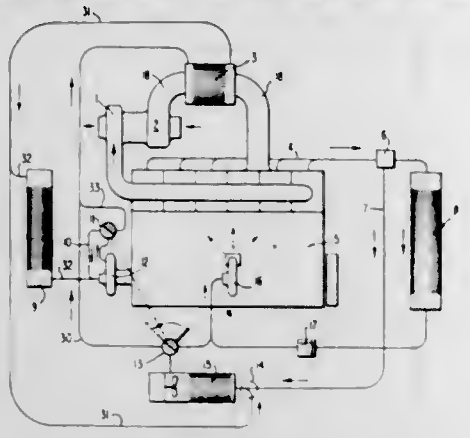

air within the cooler heat exchanger for cold weather starting and the initial operation.

3,397,685
UNIVERSALLY MOUNTED ARCHERY BOW HANDLE
Beeby G. Walker, 131 N. Nicholson Ave., Monterey Park, Calif. 91754
Filed Aug. 9, 1965, Ser. No. 478,103
3 Claims. (Cl. 124—24)

A handle or gripping device is disclosed for use in holding an archery bow, so as to simplify the avoidance by the archer of heeling, toeing and torquing of the bow during use. The tension applied to the bow string by the drawn arrow is transmitted to the bow, but the handle, being movably coupled to the bow, does not heel, toe or torque.

3,397,686
HEAT DEVICE
Burton B. Jones, Houston, Tex., assignor of one-third each to W. Don Shepherd and Frank Young
Filed Jan. 21, 1966, Ser. No. 522,164
2 Claims. (Cl. 126—59.5)

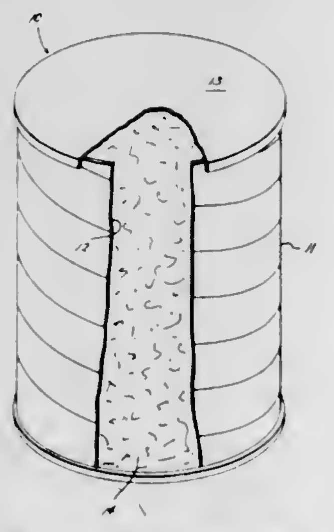

Heat device having a consumable, spirally wrapped paper outer container, fixed bottom and removable lid, the container being filled with a heat and smoke emitting fuel comprised principally of styrene bottoms.

3,397,687
TONGUE DEPRESSOR
Herman Kirchdoerfer, San Marino, Calif. (1121 E. Green St., Pasadena, Calif. 91101)
Filed Feb. 1, 1965, Ser. No. 429,565
5 Claims. (Cl. 128—15)

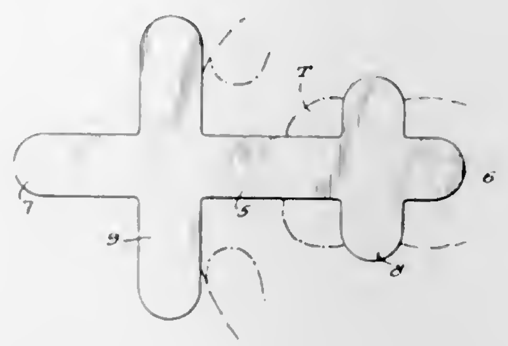

This invention relates to an element for depressing the tongue and having ancillary purposes, as a teething stick and a pacifier. The element is formed of suitable material, as wood, plastic or other composition which may have moderate flexibility, said member being flat and having a longitudinal part or blade and two transverse parts that are spaced longitudinally, of which one has a width readily insertable into the oral cavity and yet wide enough to engage and keep the tongue flat, and the other substantially wider, so as to be difficult of insertion into the oral cavity. The latter transverse part, due to its greater width, serves as a visual gauge that readily indicates whether or not the narrower part is in flatwise tongue engagement, as desired. The entire device may be dipped in any flavor and sweetener material or medicine, or at least the part thereof that resides in the mouth in use.

3,397,688
PNEUMATIC HEAD AND NECK IMMOBILIZER
Max Gottfried, Rossford, Ohio, assignor to Jobst Institute, Inc., Toledo, Ohio, a corporation of Ohio
Filed Dec. 13, 1965, Ser. No. 513,249
5 Claims. (Cl. 128—76)

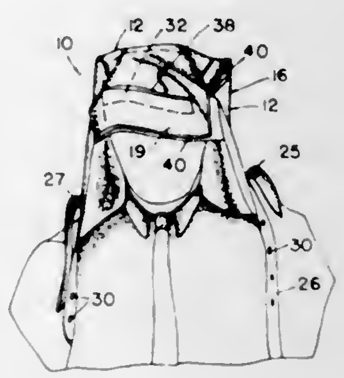

An immobilizer for the human head-neck zone which can be easily positioned to envelop a patient's head and then inflated by mouth to strongly brace and support the injured zone. It consists of a helmet or hood enveloping a patient's head and fabricated of sheet material having inflatable portions adapted to contact areas of the head together with means to hold the helmet in place during inflation. The device also has means for inflating the helmet to thereby engage the inner walls against side and rear head areas with a resilient compressive force. The means for holding the helmet during inflation consists of a harness passing around an armpit of the patient to a further releasable connection to the device.

3,397,689
INTRODUCER SHEATH
Vittorio Marcantonio, 9 Via Silvestro Petrini, Chieti, Italy
Filed May 5, 1965, Ser. No. 453,274
Claims priority, application Italy, Mar. 4, 1965, 4,645/65
4 Claims. (Cl. 128—79)

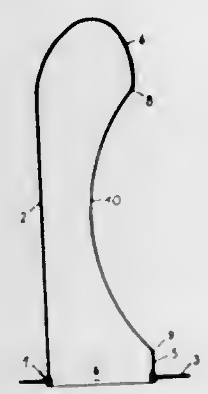

An introducer sheath for assistance in mating which is provided with a base plate with an aperture into which a hollow substantially rigid sheath member with a closed end portion is rotatably secured. The sheath member has a longitudinally extending lateral opening to permit contact between the generative organs.

3,397,690
INTRA-UTERINE CONTRACEPTIVE DEVICE
Gregory Majzlin, 92 Whitman Drive, Brooklyn, N.Y. 11234
Filed Dec. 1, 1965, Ser. No. 510,752
9 Claims. (Cl. 128—130)

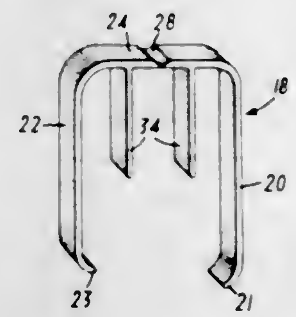

An intra-uterine device is provided for placement within the uterus to prevent conception and to obtain samples of uterine wall tissue. The device is made from a flexible material and has at least two arms connected together by a connecting member, said connecting member having at least one pivot point located between the arms at a point above the level of the bottom edge of the arms and below the level of the top edge of the arms.

3,397,691
INTRA-UTERINE CONTRACEPTIVE DEVICE
Gregory Majzlin, 92 Whitman Drive, Brooklyn, N.Y. 11234
Filed June 2, 1966, Ser. No. 554,765
9 Claims. (Cl. 128—130)

1. An intra-uterine contraceptive device comprising a flattened spiral spring member of resilient material having a plurality of windings which are capable of expanding and contracting, said windings tracing a three-dimensional volume of a generally rectangular shape which contains a central axis of expansion and contraction, said windings being expandable and contractable along axes which are generally parallel to said central axis, the distance between opposite windings measured perpendicularly to said central axis and the distance between the ends of said windings when contracted being such that said spring member when so contracted may be passed through the

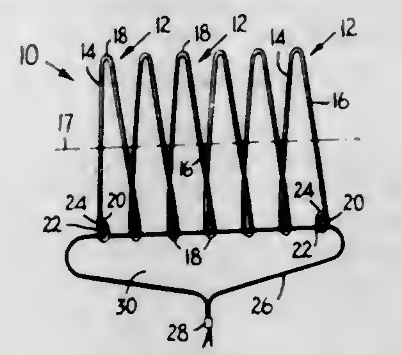

cervical canal of the user of the device for emplacement and subsequent expansion within the uterus.

3,397,692
PROTECTOR FOR INCISED WOUNDS
Paul Creager, Jr., and William F. Blanford, Dayton, Ohio, and Harold W. Harrower, Greenville, R.I., assignors, by direct and mesne assignments, to Parke, Davis & Company, Detroit, Mich., a corporation of Michigan
Filed Feb. 24, 1966, Ser. No. 529,763
5 Claims. (Cl. 128—132)

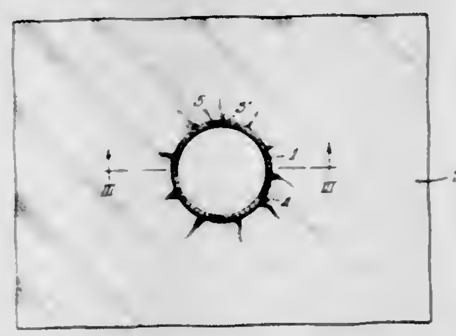

1. A wound edge protector for use in surgical procedures comprising: a thin drape membrane of pliable material for covering a patient's body, and having a generally central hand opening therein, and anchor means attached adjacent the membrane edge of the opening said anchor means comprising a resilient rod formed into an annulus, the anchor means being generally capable of being compressed under restraint and expandable when released so that when inserted through an incision the anchor means underlies the incision edges and anchors the drape internally around the incision to cover the wound surface.

3,397,693
BREATHING APPARATUS
Ernst Warncke, Lubeck, Germany, assignor to Otto Heinrich Drager, Lubeck, Germany
Filed Dec. 6, 1965, Ser. No. 511,823
Claims priority, application Germany, Jan. 2, 1965, D 46,181
6 Claims. (Cl. 128—191)

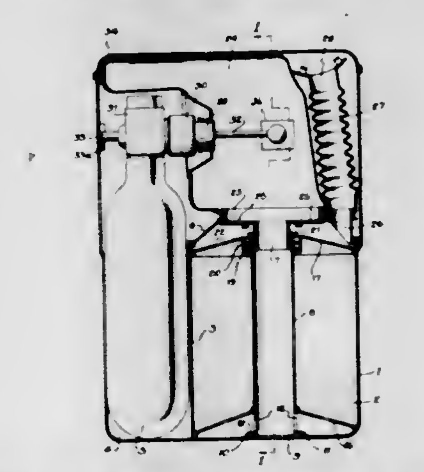

A compact breathing apparatus has a housing holding a gas tank, an air regenerating agent container adjacent

the tank, and a breathing bag and mouthpiece tube above the container. When the breathing bag and tube are pulled out of the housing, gas automatically flows into the breathing bag to prerinse it with oxygen.

3,397,694
COMBINATION SYRINGE PACKAGE, SYRINGE AND CHAMBER
Robert W. Ogle, Phoenix, Ariz., assignor to C.S.M. Corporation, Wilmington, Del., a corporation of Delaware
Filed July 6, 1965, Ser. No. 469,467
14 Claims. (Cl. 128—272)

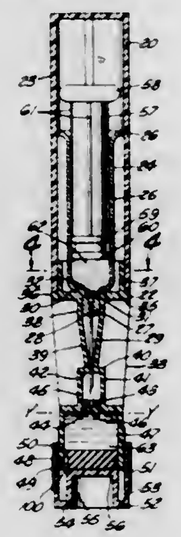

A novel syringe construction comprising a syringe barrel, a plunger received in the open end of said barrel and adapted to be longitudinally reciprocated therein, a centrally disposed boss on the closed end of said syringe barrel, a needle cover structure for said needle, one end of which seals on said boss, the other end of said cover having a chamber therein, one end of said chamber being in proximity to the open end of said needle and normally separated therefrom by a first stopper slidably mounted in said chamber, a second stopper in that end of the chamber remote from the open end of said needle and spaced from said first stopper, said second stopper also being slidable within the chamber, said chamber between said stoppers being adapted to contain a fluid, and means associated with said second stopper whereby upon the exertion of pressure on said first stopper said fluid communicates said pressure to said second stopper and slidably moves said second stopper to open communication for said fluid to said syringe barrel.

3,397,695
CATAMENIAL TAMPON AND METHOD OF MAKING
Joseph A. Voss, 1223 Race St., Apt. 906, Denver, Colo. 80206
Filed June 28, 1965, Ser. No. 467,513
15 Claims. (Cl. 128—285)

An improved catamenial tampon is provided comprising a plurality of strips which are centrally joined in a radial configuration, folded and compressed together to form a unitary structure, the individual strips of which separate on contact with moisture. Also provided is a method for manufacturing the tampon including the steps of radially and longitudinally compressing the tampon and joining the strips together in a unitary structure, while controlling the process steps of maintaining the moisture absorptivity of the strips approximately the same as that which obtained prior to compression.

3,397,696
SANITARY PANTY HAVING A GATHERED CROTCH PORTION
Charlotte I. Rickard, Neenah, Wis., assignor to Kimberly-Clark Corporation, Neenah, Wis., a corporation of Delaware
Filed Aug. 27, 1965, Ser. No. 483,169
10 Claims. (Cl. 128—288)

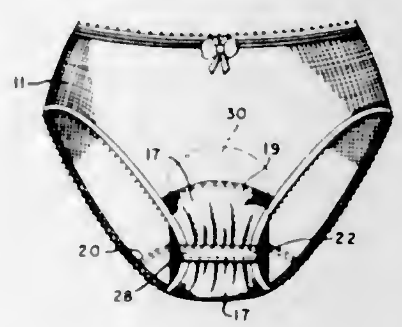

An improved stretch panty for use with sanitary napkins. The panty has substantially conventional dimensions and is composed of fabric which stretches in all directions. A minor transverse portion of the crotch section is gathered and made narrower across its full width to give that portion a dimension not more than the width of a sanitary napkin. The gathered portion is restricted from transverse stretching while the remaining crotch portions are unrestricted. This construction holds napkins more securely in place while substantially eliminating edge soiling in the crotch section.

3,397,697
DISPOSABLE SANITARY SHIELD FOR UNDERGARMENTS
Charlotte I. Rickard, Neenah, Wis., assignor to Kimberly-Clark Corporation, Neenah, Wis., a corporation of Delaware
Filed Sept. 7, 1965, Ser. No. 485,252
15 Claims. (Cl. 128—288)

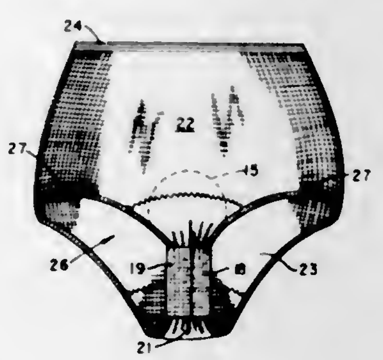

A disposable absorbent shield designed to encircle the crotch portion of panty undergarments to protect against soilage. The shield is made of flexible sheet material with an absorbent face and a fluid impervious backing. It is provided with adhesive means to permit forming a portion of the sheet into a band adapted to encircle the crotch portion of an undergarment in freely slidable relationship. Other portions of the sheet may extend into the body area of the undergarment for additional protection.

3,397,698
URINAL
Gladys B. Hickey, 55 Wachusett St., Worcester, Mass. 01605
Filed Oct. 15, 1965, Ser. No. 496,598
5 Claims. (Cl. 128—295)

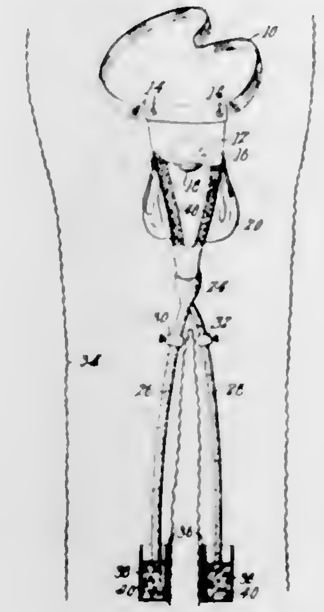

A urinal comprising a flexible water-proof bag with removable absorbent material lining the bag and an outlet at the lower end thereof, together with a pair of tubes which are connected with respect to said outlet, each tube being adapted to run down a trouser leg to a urine-receiving container, one in each trouser leg, and there being removable absorbent material in each of said containers.

3,397,699
RETAINING CATHETER HAVING RESILIENTLY BIASED WING FLANGES
Gerald C. Kohl, 1106 S. 4th St., Tacoma, Wash. 98405
Continuation-in-part of application Ser. No. 519,514, Jan. 10, 1966. This application May 5, 1966, Ser. No. 554,260
10 Claims. (Cl. 128—349)

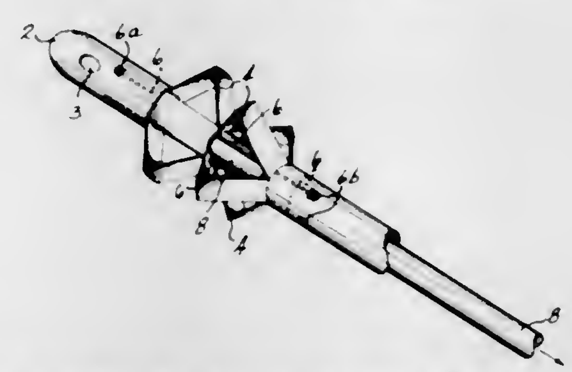

A flexible thin-walled catheter formed with an occluded distal end and an open proximal end. A lateral aperture is defined by the tube walls of the catheter adjacent to the distal end. A plurality of longitudinal slits in a zone adjacent to but proximally of the aperture define a plurality of foldable wings. An elastic cord is secured to the tube at both ends of the wings to provide a biasing force tending to radially extend the wings to provide a means for retaining the catheter in place. During insertion of the catheter into the body cavity being drained or removal therefrom a stylet is inserted through the opened end of the tube until it contacts the occluded end to stretch the tube to such an extent that the biasing force of the cord is overcome and the foldable wings are radially drawn back into aligment with the body of the tube. The use of the flexible resilient cord to flex the wings permits the catheter to be made of flexible material having little columnar strength to provide a more comfortable and easily curved catheter.

3,397,700
FLAVOR ENHANCED CIGARETTES AND CIGARS
Edward S. Harlow and William B. Wartman, Jr., Richmond, Va., assignors to The American Tobacco Company, New York, N.Y., a corporation of New Jersey
No Drawing. Filed May 16, 1966, Ser. No. 550,167
2 Claims. (Cl. 131—9)

Enhancement of the natural flavor of tobacco smoke is accomplished by the incorporation in the outer portion of the tipping sheet of a smoking article a flavor enhancing substance. Operative substances include salts of glutamic acid and nucleotides. These substances will be in direct contact with the smoker's lips and capable of transference to the tongue to provide the enhancement or stimulation effect.

3,397,701
SMOKE COOLING CIGAR AND TIP ASSEMBLY
Seymour Robins, 41 W. 11th St., New York, N.Y. 10011
Original application May 28, 1962, Ser. No. 198,263, now Patent No. 3,236,243, dated Feb. 22, 1966. Divided and this application Oct. 20, 1965, Ser. No. 515,273
1 Claim. (Cl. 131—10)

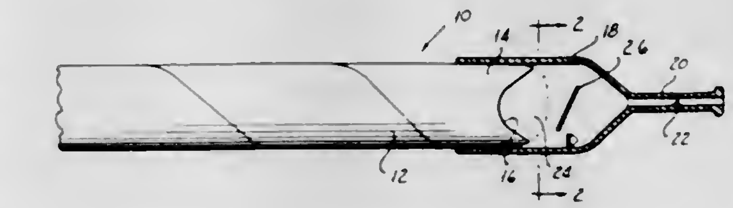

A smoke cooling cigar and tip assembly in which a narrow bit has an enlarged extension of generally cylindrical form which fits over the recessed tip of a smokeable article to form an expansion chamber. A plurality of baffles having surfaces are mounted within the chamber at a certain location along the length thereof in evenly spaced relationship around the inner surface thereof and with the baffle surfaces lying in planes making an acute angle with the chamber longitudinal axis to increase turbulence of smoke drawn through the bit and to precipitate undesirable elements therefrom.

3,397,702
SELF-CLEANING PIPE
Robert S. Armstrong, 2535 River Road, Wall Township, Monmouth County, N.J. 08736
Filed May 31, 1966, Ser. No. 553,968
16 Claims. (Cl. 131—183)

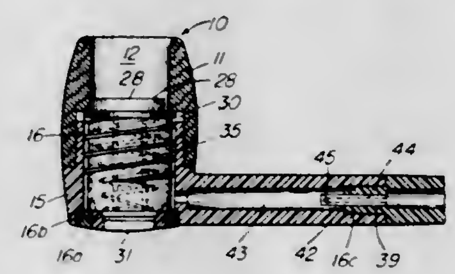

This application discloses a self-cleaning pipe consisting of a bowl having two interlocking parts with a removable ejector assembly housed in the lower part. The ejector is freely mounted within a cylinder to prevent sticking and to ream the sides of the upper part when emptying same. The lower part and cylinder are preferably molded of tasteless nylon which may be combined with an upper part of tasteful briar. The stem is provided with a lower trough to prevent saliva from entering the bowl.

3,397,703
PIPE WITH REPLACEABLE CORNCOB INNER BOWL
Carl J. Otto, Washington, Mo., assignor to Missouri Meerschaum Co., a corporation of Missouri
Filed July 29, 1966, Ser. No. 568,911
2 Claims. (Cl. 131—201)

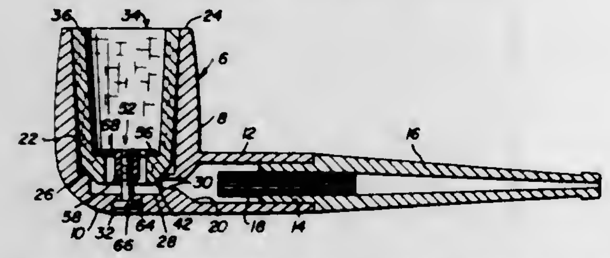

The pipe herein shown resembles a briar pipe. The bowl chamber has a saliva well and an annular ledge above the level of the well. The bowl bottom is axially bored, then counterbored to permit secluded but accessible use of holddown and fastening means for a replaceable corncob-liner having a centrally apertured bevelled bottom surface seated on the ledge. The liner fastening means comprises a stabilizing disk seated atop an endless shoulder at the lower end of the liner, the disk having smoke passing orifices and a depending screw-threaded neck for the shank of a screw-threaded headed fastener whose head is protectively confined in the counterbore.

3,397,704
FILTERING DEVICE
Frank A. Marinaccio, Clark Road, Bernardsville, N.J. 07924
Filed May 14, 1965, Ser. No. 455,722
13 Claims. (Cl. 131—261)

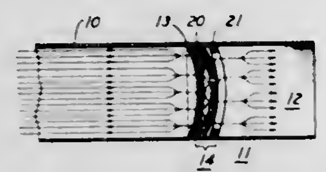

In this filter, an accelerating member is combined with a diverting member. The accelerating member is perforated with a number of holes or orifices, while the diverting member includes at least one flexible member perforated with a number of expandable slits.

3,397,705
FILTER ELEMENTS AND ADDITIVE CONTAINING MATERIAL THEREFOR
Cephas H. Sloan and Bobby J. Sublett, Kingsport, Tenn., assignors to Eastman Kodak Company, Rochester, N.Y., a corporation of New Jersey
No Drawing. Continuation-in-part of application Ser. No. 425,920, Jan. 15, 1965. This application Aug. 2, 1965, Ser. No. 476,660
4 Claims. (Cl. 131—266)

A filter element and method of manufacture therefor wherein said filter element contains a tow material which comprises a bundle of fibrous filaments, said filaments having embedded therewithin and formed as an integral part thereof particles of a water-soluble salt. The various salts are sodium phosphite and potassium phosphite and will chemically react with and thereby remove hydrogen cyanide from a gaseous medium.

3,397,706
BEAUTICIAN'S INSTRUMENT KIT
Mary A. Hogan, 536 Genesee St., Olean, N.Y. 14760
Filed July 19, 1965, Ser. No. 472,849
2 Claims. (Cl. 132—79)

A beautician's portable instrument kit comprising a dual-shell type casing, wall portions of which are formed of magnetic or para-magnetic material to provide flat surfaces against which beautician's instruments of widely varying shapes and sizes and/or para-magnetic characteristics may be applied in preferred positional relationships. A plurality of flexible para-magnetic strap devices are

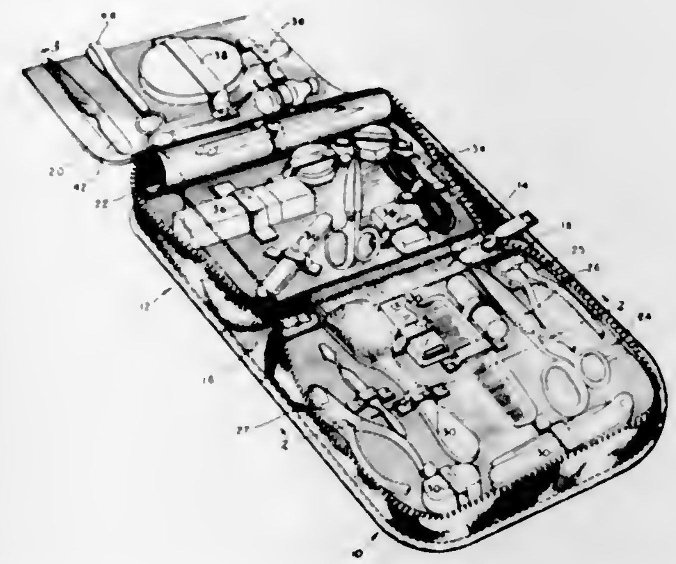

provided in combination therewith, whereby said straps may be manually molded to the instruments individually and magnetically adhered at their opposite ends to casing wall portions; thereby detachably retaining the instruments in preferred orderly arrangements in the casing while being readily available and withdrawable for use.

3,397,707
COSMETIC DEVICES
Joseph Aversa, Scarsdale, N.Y.
(270 Lafayette St., New York, N.Y. 10012)
Filed Aug. 6, 1965, Ser. No. 477,799
2 Claims. (Cl. 132—79)

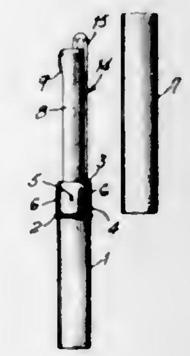

A cosmetic containing and applicating device in which an elongated support having a plurality of elongated recesses therein is slidably carried by a tubular base. Removable cosmetic containing trays and an applicator are carried within the recesses and a cap member overlies the support and a portion of the base when the device is not in use.

3,397,708
FORCED AIR DRYING SYSTEM FOR A DISHWASHER
Ralph S. Braden, Bellbrook, Ohio, assignor to General Motors Corporation, Detroit, Mich., a corporation of Delaware
Continuation-in-part of application Ser. No. 350,991, Mar. 11, 1964. This application Feb. 1, 1966, Ser. No. 524,057
4 Claims. (Cl. 134—57)

A domestic dishwashing chamber provided with a blower and a temperature responsive means outside the chamber to sense the temperature of the chamber so as

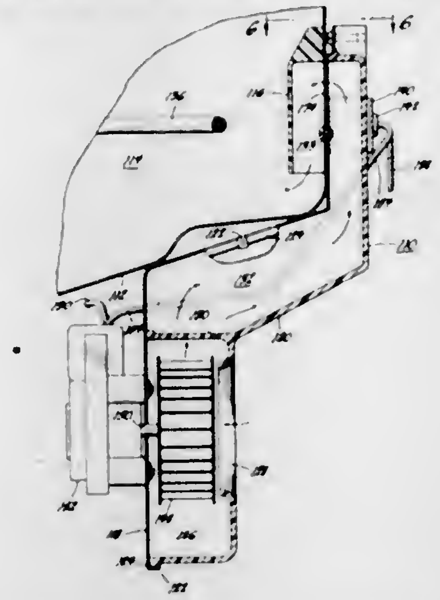

to initiate drying air circulation through the chamber after a predetermined temperature has been obtained.

3,397,709
CYLINDRICAL PROCESSING CONTAINER
Kuno Eisenburger, Wels-Thalheim, Gut am Hummelberg, Austria
Filed June 6, 1966, Ser. No. 555,349
Claims priority, application Austria, June 11, 1965, A 5,326/65
9 Claims. (Cl. 134—132)

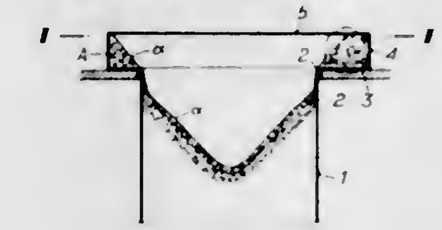

A vertical, substantially cylindrical processing container is disclosed as having at least one charging platform mounted along the periphery of an upper part thereof. A wall bounds each platform on the outside, and each platform tapers in width radially inwardly in the circumferential direction. Thereby material forced along each platform falls off the radially inner edge thereof into the main body of the container.

3,397,710
PLAYHOUSE
John F. McElroy, 625 Orange Grove Ave., South Pasadena, Calif. 91030
Filed Dec. 19, 1966, Ser. No. 602,608
9 Claims. (Cl. 135—1)

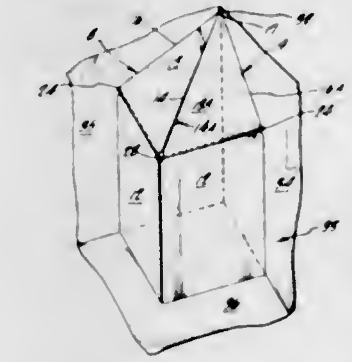

A child's playhouse comprised of flexible panels adapted for installation on intersecting walls of a room to define an enclosed space bounded partly by the walls and the floor of the room.

3,397,711
DEVICE FOR RELEASING WATER TO PREVENT FREEZING
Charles H. Strange, Box 83, Ponte Vedra, Fla. 32082
Filed Sept. 20, 1965, Ser. No. 488,567
2 Claims. (Cl. 137—62)

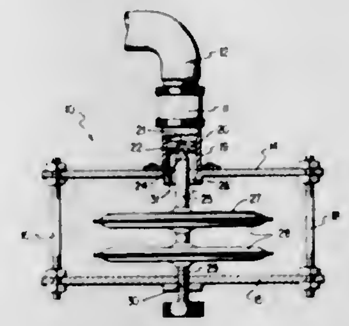

The invention is a thermostatically controlled valve for mounting on a water faucet for allowing flow of warm water when the ambient temperature is below the freezing point. The valve and thermostat therefor are so constructed that water from the valve will fall onto a temperature sensitive wafer. Wettable fabric on the upper surface of the wafer aids in spreading the water over the wafer.

3,397,712
VALVE HAVING A RUPTURABLE SEAL ASSEMBLY
Norman Harvey Boroson, Succasunna, N.J., assignor to Thiokol Chemical Corporation, Bristol, Pa., a corporation of Delaware
Filed Dec. 19, 1962, Ser. No. 245,746
8 Claims. (Cl. 137—68)

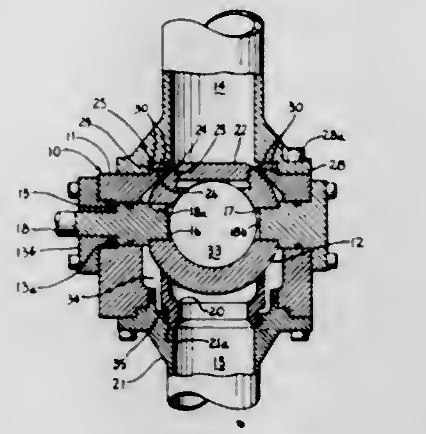

A valve having a rotating ball-type flow control element also contains a novel hermetic seal which provides a nonpenetrable seal or barrier to a corrosive fluid in the flow system during storage thereof. The barrier is easily replaceable and in operation is ruptured, upon initiation of fluid flow through the system containing the valve by rotation of said ball element.

3,397,713
FEEDBACK DIVIDER FOR FLUID AMPLIFIER
Raymond W. Warren, McLean, Va., assignor to the United States of America as represented by the Secretary of the Army
Filed Sept. 10, 1962, Ser. No. 222,748
9 Claims. (Cl. 137—81.5)

1. In a fluid amplifier:
(a) means for producing a fluid power stream,
(b) a pair of receiver means for receiving said power stream,

(c) divider means for separating said pair of receiver means, and

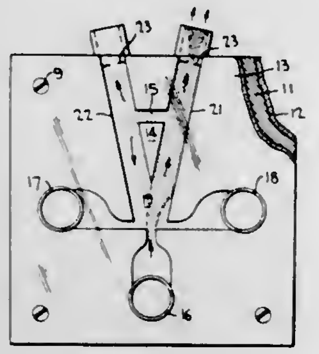

(d) feedback means connecting said pair of receiver means through said divider means.

3,397,714
MECHANICAL GAS SEAL FOR FLOOR DRAIN TRAPS AND THE LIKE HAVING MEANS FOR SEALING IN THE TRAP AND AT A COVER THEREFOR
Sven Algot Joel Liljendahl, Gyllenstiernas vag 8, Kallhall, Sweden
Filed Nov. 16, 1964, Ser. No. 411,529
Claims priority, application Sweden, Nov. 19, 1963, 12,721/63
6 Claims. (Cl. 137—247.15)

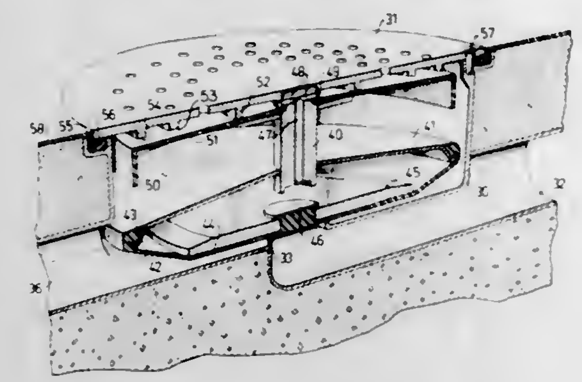

This invention relates to a mechanical odour seal which is capable of preventing the outflow of gases from a discharge pipe, comprising a liquid receiving valve housing, an outlet from said housing and a diaphragm-like valve body normally closing said outlet, said valve housing consisting of a floor draining trap having an apertured strainer cover that can be automatically closed by means of a valve member disposed below the strainer cover when the level of liquid in the trap rises above a predetermined value.

3,397,715
ELECTRONIC LEVEL CONTROL
George H. Fathauer, Decatur, Ill., assignor to Radson Engineering Corporation, Macon, Ill., a corporation of Illinois
Filed May 6, 1965, Ser. No. 453,625
10 Claims. (Cl. 137—387)

An electronic level control device for regulating the level of fluid or solids within a container such as within a washing machine or ice cube dispenser. The device includes a high frequency oscillator circuit for increasing the sensitivity of a capacitance control circuit which is utilized to signal the achieving of a desired fluid or solid level of the material being sensed. The oscillator is coupled through a high impedance transformer to the capacitance control circuit. The capacitance control circuit includes a variable capacitor coupled in parallel with a capacitance which is formed between a probe disposed adjacent to a conducting wall of a con-

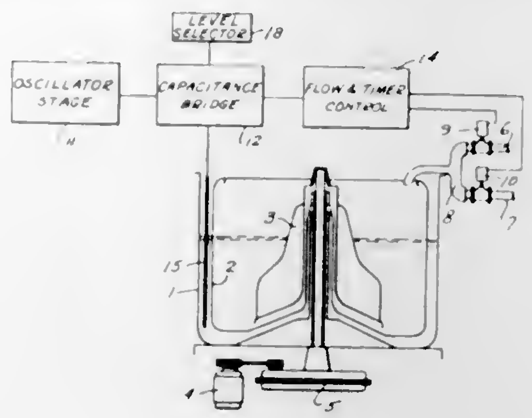

tainer, and the AC voltage developed thereby is rectified and applied to the gate of a silicon controlled rectifier which controls the filling of the container which holds the probe.

3,397,716
CONTROL TO RENDER DISCHARGE PUMP OPERABLE BEFORE LIQUID IN A RECEPTACLE REACHES OVERFLOW LEVEL
John Nils Jakob Andersson, Tullinge, Sweden, assignor to Aktiebolaget Electrolux, Stockholm, Sweden, a corporation of Sweden
Filed Nov. 16, 1965, Ser. No. 508,006
Claims priority, application Sweden, Nov. 20, 1964, 14,066/64
1 Claim. (Cl. 137—394)

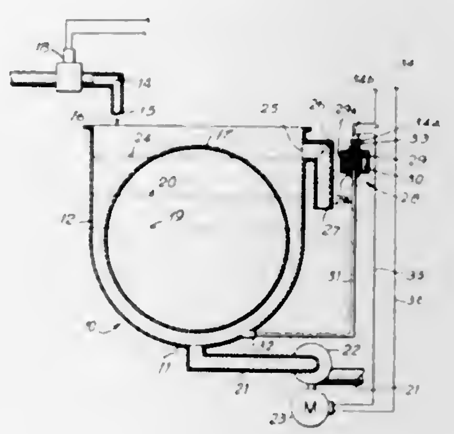

A washing machine having a receptacle for a body of liquid and a clothes container mounted for movement therein, supplying liquid to the receptacle at a first level which is always above the surface level of the liquid body, overflowing liquid from the receptacle at a second level below the first level, discharging liquid from the bottom of the receptacle by a pump driven by an electric motor connected in an electrical circuit having a normally open switch, a hollow member having a flexible wall portion movable between first and second positions and in its first position when the switch is open, upright piping connected at its upper end to the hollow member and its lower end to the receptacle to receive liquid therefrom during operation of the washing machine at a third level below the second overflow level, the upright piping and hollow member forming a conduit having a gaseous medium confined therein above the surface level of the liquid received from the receptacle, and, when the liquid in the receptacle rises to a fourth level which is above the third level and below the second liquid overflow level, the liquid in the conduit will rise and compress the gaseous medium confined therein to move the flexible wall portion from its first to its second position, thereby causing the switch to close and complete the circuit for the motor to drive the pump.

3,397,717
DIRECTIONAL CONTROL AND PRESSURE REGULATING VALVE
Wayland A. Tenkku, Mentor, and Frank Hribar, Jr., Kirtland, Ohio, assignors to Fluid Regulators Corporation, Painesville, Ohio, a corporation of Ohio
Filed May 27, 1964, Ser. No. 370,537
2 Claims. (Cl. 137—529)

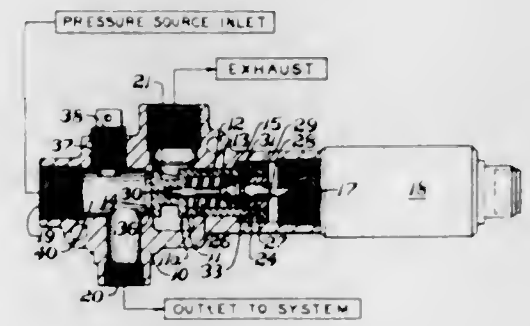

1. A valve comprising:
(A) a casing;
(B) two flow ports in the casing;
(C) an orifice in the casing between said flow ports;
(D) a plunger member which reciprocates in the casing to control the direction of the flow of a fluid pressure medium through the casing from one port to the other port;
(E) a poppet head at one end of said plunger member adapted to seat in said orifice to block communication between said flow ports when said plunger is at one extreme of its reciprocating stroke;
(F) means biasing said plunger member to a position in the casing in which said ports are normally in communication with each other;
(G) a motor for displacing the plunger member against the resistance of said biasing means to a position to close the aforesaid communication between said ports; and
(H) means within said plunger for yieldingly connecting said motor with said plunger member, said yielding connecting means:
 (1) acting to yieldingly transmit the displacing force from said motor to said plunger member and
 (2) being responsive to the fluid pressure medium at one of said ports to modulate the pressure of said medium by permitting displacement of said plunger member to selectively re-communicate said ports.

3,397,718
VALVE MEANS
David H. Jones, Port St. Joe, Fla., assignor to Beloit Corporation, Jones Division, Beloit, Wis.
Filed Oct. 20, 1965, Ser. No. 498,899
5 Claims. (Cl. 137—605)

A pressure vessel having a valve member exteriorly positioned of a conduit and including a body forming a peripheral beveled edge facing away from the vessel with a delivery pipe within the valve member such that the pipe moves from a retracted position to an extended position interior of the valve. The valve member also has a conical body disposed in the path of liquids entering the vessel for scattering liquids. Also included in the device is a valve mounting means to move the valve member,

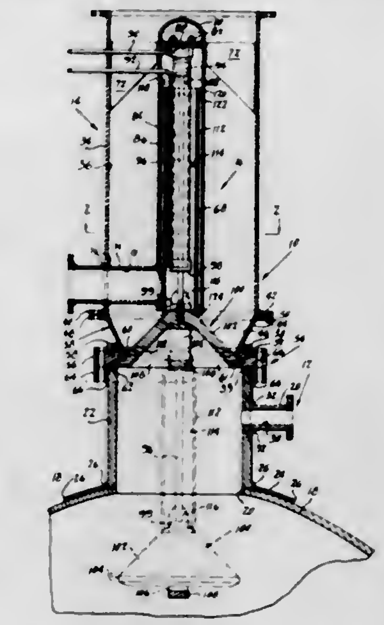

a material delivery means and the aforementioned conduit.

3,397,719
HYDRAULIC PRESSURE ACCUMULATOR
Johannes Ortheil, Anrath, Germany, assignor to Langen & Co., Dusseldorf, Germany
Filed Aug. 30, 1965, Ser. No. 483,771
3 Claims. (Cl. 138—30)

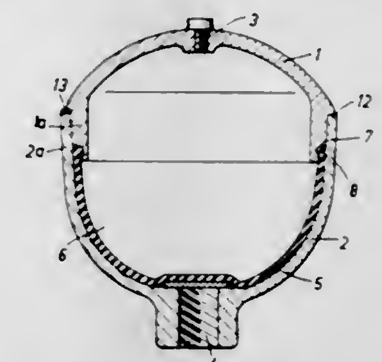

An hydraulic pressure accumulator in which annular rim portions which have respectively innner and outer frustroconical faces of a pair of cup-shaped members are press-fitted into each other with the rim of a flexible diaphragm clamped between a reduced diameter portion of the outer frustoconical surface on the rim portion of one member and the corresponding inner frustoconical surface of the other member.

3,397,720
MULTIPLE LAYER INSULATION FOR A CRYOGENIC STRUCTURE
Peter Jones, Los Angeles, Calif., assignor, by mesne assignments to Hitco, Gardena, Calif., a corporation of California
Filed Oct. 23, 1964, Ser. No. 405,929
7 Claims. (Cl. 138—149)

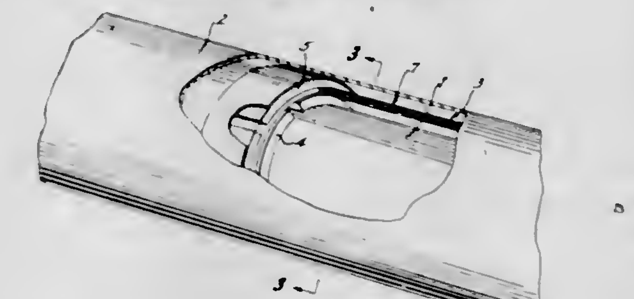

A thermal insulation of alternating plain reflective plastic sheets and dimpled plastic sheets, the dimples being

spaced apart along two directions substantially at right angles to each other. Support means at each end of an insulation pack are provided to prevent contact of the insulation with inner or outer walls of an insulated container.

3,397,721
TENSION CONTROL APPARATUS
William C. Lovelett, Mount Holly, N.J., assignor to CF&I Steel Corporation, a corporation of Colorado
Filed Dec. 17, 1965, Ser. No. 514,546
1 Claim. (Cl. 140—147)

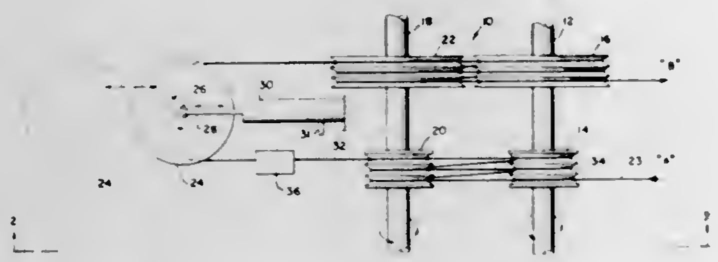

Apparatus for maintaining a minimum constant tension on a cable being tensioned by progressively larger sheaves having a constant angular velocity, particularly when the apparatus is stopped or reversed. The apparatus includes a return sheave mounted to guide the cable from the small sheaves to the large sheaves, means to support the return sheave for motion between a fixed stop position and other positions more remote from the large and small sheaves, a hydraulic cylinder connected to the return sheave support means, and a source of constant pressure hydraulic fluid for the cylinder.

3,397,722
MITER BOX
Albert E. Long, Belmont, Ohio 43718
Filed Oct. 22, 1965, Ser. No. 502,060
1 Claim. (Cl. 143—86)

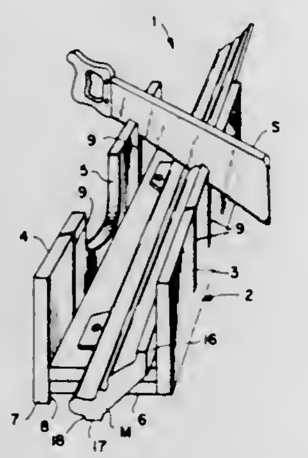

1. A carpenter's miter box comprising an elongated base, elongated side walls extending vertically upwardly and fastened to longitudinal edges of said base at right angle thereto, one of said sidewalls depending below the surface of said base and having a window in its upper edge portion, diagonally extending slots extending vertically downwardly from the top edges of said side walls, and a plurality of longitudinally disposed adjusting means comprising slots formed in said base, and supporting blocks having vertical holes, wing bolts extending through said holes for selectively securing said blocks in a position along said slots so as to support the front, bottom edge portion of a molding strip supported angularly in said box, the rear vertically extending surface of said molding strip adapted to abut the inner surface of one of said sidewalls and the front edge of the horizontally extending bottom surface of said moulding strip adapted to abut said blocks.

3,397,723
METHOD OF PREPARING FLITCHES FOR VENEER CUTTING MACHINES
David E. Hervey, Elm City, N.C.
(1806 High St., Logansport, Ind. 46947)
Filed June 13, 1966, Ser. No. 557,182
3 Claims. (Cl. 144—309)

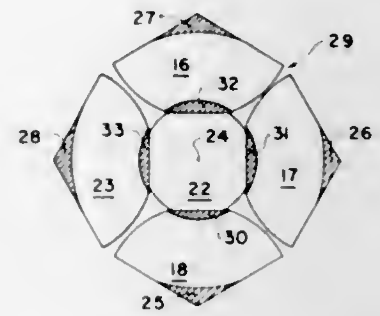

1. A method of preparing flitches for veneer cutting machines comprising the steps of tri-secting a log into equal proportions, producing a longitudinally extending flattened area lengthwise each of the portions, each of said areas being located in such a position that in a cross section equal arcs are provided on either side of such area, bonding of flitch stay means to each of said flitches and cutting veneers from said flitches whereby a high quality and quantity of veneer may be produced.

3,397,724
THIN-WALLED CONTAINER AND METHOD OF MAKING THE SAME
Kenneth E. Bolen, Mark E. Larkin, and Newton R. Wilson, Bartlesville, Okla., assignors to Phillips Petroleum Company, a corporation of Delaware
Filed June 3, 1966, Ser. No. 555,042
10 Claims. (Cl. 150—.5)

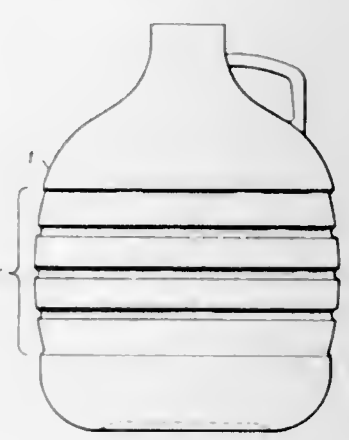

A thin-walled container made from a yieldable material, for example, of a plastic material, is preformed with walls bulged to a shape such that upon filling the container and allowing it to stand, bulging, which would have occurred had the container been made with planar walls, is substantially reduced or limited. The container is suitable for use to contain milk and is generally of square-type.

3,397,725
COVER DEVICE FOR END OF HANDBAG HANDLE OR THE LIKE
Daniel I. Reiter, 868 6th Ave., New York, N.Y. 10009
Filed May 29, 1967, Ser. No. 641,898
9 Claims. (Cl. 150—33)

Cover devices which enclose the end of a flexible handle for a handbag or the like, an edge of the device being rolled over to form an internal lip engaging the

handle in order to reduce the tendency of the handle to break by flexing at the edge. The cover devices are

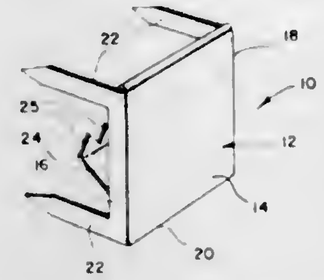

secured to the body of the bag by prongs or rivets, and the handle is secured to the cover devices or directly to the body of the bag.

3,397,726
THREADED LOCK WASHER AND METHOD FOR FABRICATION THEREOF
Howard C. Gobs, Syosset, N.Y., assignor to Electrical Fittings Corporation, East Farmingdale, N.Y., a corporation of New York
Filed Mar. 16, 1966, Ser. No. 534,837
4 Claims. (Cl. 151—37)

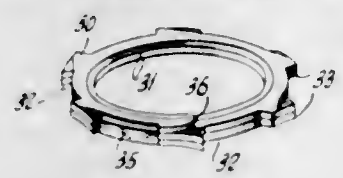

A lock washer made of a strip of coil stock material and the process and apparatus for fabricating same. The fabricating apparatus is a multi-station forming die-punch device wherein a strip of material is cut from stock and wound on a mandrel; a locking tab is formed on the washer for preventing unwinding of the finished product. The fabricating apparatus then forms the remainder of the washer, its notches and gripping edges.

3,397,727
RESILIENT RETAINING RING ASSEMBLY
Steve J. Orosz, 10252 Casanes Ave., Downey, Calif. 90241
Filed July 29, 1965, Ser. No. 475,746
3 Claims. (Cl. 151—69)

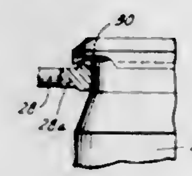

1. In a fastener for attaching a first member to a second member, said fastener comprising an externally threaded stud bolt to be mounted on said second member, and an internally threaded sleeve nut to be mounted on said first member and to be threadably received by said bolt, said sleeve nut having an external peripheral groove adjacent the inner end thereof defining a shoulder, a resilient retaining ring disposed in said groove to bear against said shoulder, said retaining ring having a serpentine configuration with a plurality of inwardly extending convolutions defining nodes each having a first surface engaging said shoulder, said first surface of each of said inwardly extending convolutions, and the surface thereof opposite to said first surface each being shaped with a taper increasing in thickness towards the inner edge of the retaining ring so as to cause each such surface to extend out from the plane of said retaining ring and into mating relationship with a complementary shape in the surface of said shoulder.

3,397,728
SAFETY TRUCK-WHEEL ASSEMBLY
Edward R. McCrary, 341 Jefferson, Valley Park, Mo. 63088, and Robert L. Quinlivan, Maplewood, Mo. (245 Elm, Glendale, Mo. 63122)
Filed Aug. 19, 1966, Ser. No. 573,539
2 Claims. (Cl. 152—158)

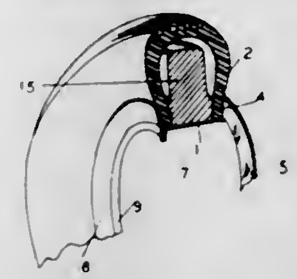

A pneumatic tire having a solid safety tire of slightly smaller cross section mounted on the rim between the tire beads. The safety tire comprises a plurality of arcuate segments held together by key structures therebetween.

3,397,729
BIAS CONSTRUCTED TRUCK TIRE
Lawrence R. Sperberg, Box 12308, El Paso, Tex. 79912
Filed Oct. 24, 1965, Ser. No. 504,768
8 Claims. (Cl. 152—354)

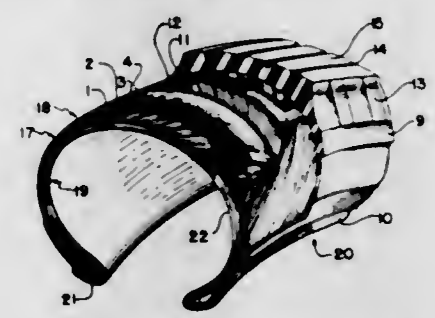

A biased constructed truck tire using a high impact energy moisture resistant cord, such as nylon, in the outer plies and a composite of material having low growth and high fusion tolerances such as rayon, polyester, and fiber-glass for the inner plies, with the plies located therebetween being constructed of material having properties intermediate those set forth for the inner and outer plies. For example, a pneumatic tire having outer plies of nylon, inner plies of fiber-glass, would require plies located therebetween fabricated from rayon, polyesters, or polyolefins.

3,397,730
LIQUID FEED DISTRIBUTOR
Robert J. Fritz, Burlington, Vt., assignor to General Electric Company, a corporation of New York
Filed Dec. 21, 1965, Ser. No. 515,338
5 Claims. (Cl. 159—13)

1. A liquid feed distributor for forming a liquid film on a downwardly extending treating surface having a plurality of linear depressions therein arranged in the direction of liquid flow over said surface, said distributor comprising:

(a) a liquid reservoir disposed entirely above said treating surface whereby the product and released vapors of the treatment are removed directly from the apparatus from the space below said reservoir;
(b) said reservoir having a bottom wall;
(c) said reservoir being provided with a plurality of outlets;
(d) said bottom wall having an edge for defining a portion of each of said outlets;
(e) said edge of said bottom wall and said treating surface being joined in an abutting relationship along a line whereby the cross-sectional configura-

tion of said treating surface defines the remaining portion of each of said outlets; and

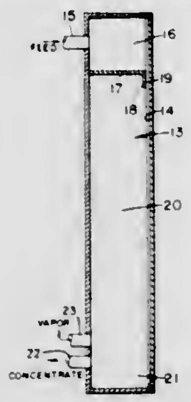

(f) whereby the flow of liquid onto said treating surface is initiated along the line at which said edge of said bottom wall and said surface are joined.

3,397,731
METHOD AND APPARATUS FOR RECONCENTRATING LIQUID DESICCANT
Charles K. Gravis III, Harold S. Wood, and George F. Seipp, Tulsa, Okla., assignors to Maloney-Crawford Tank Corporation, a corporation of Delaware
Filed June 6, 1966, Ser. No. 555,470
10 Claims. (Cl. 159—16)

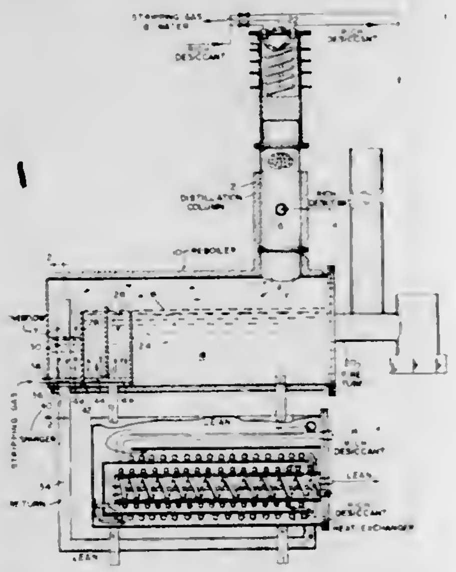

Liquid desiccant used in gas dehydration is reconcentrated in the reboiler by a series of compartmenting baffles and stripping gas injections into these compartments.

3,397,732
METHOD FOR SPRAY FORMING OF TUBULAR BODIES
Cleves H. Howell, Jr., Huntsville, Ala., assignor to the United States of America as represented by the Secretary of the Army
Filed Jan. 3, 1966, Ser. No. 518,493
4 Claims. (Cl. 164—46)

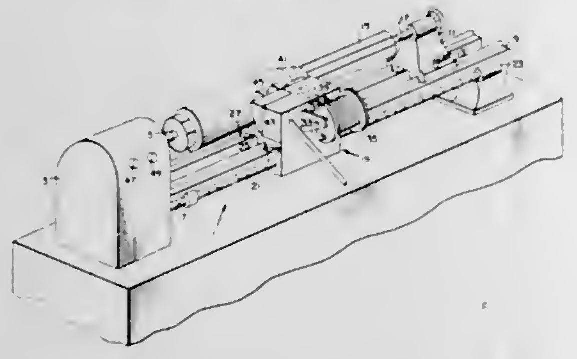

A method for forming tubular bodies by spraying molten metal on a collapsible mandrel as the spray for the molten metal is moved relative to the mandrel, working the metal after it has been sprayed on the mandrel and removing the mandrel from the finished tubular body.

3,397,733
METHOD FOR REMOVAL OF GAS FROM MOLTEN METAL DURING CONTINUOUS CASTING
Joseph D. Gricol, Flat Rock, Mich., assignor, by mesne assignments, to Concast Incorporated, New York, N.Y., a corporation of Delaware
Filed Dec. 13, 1965, Ser. No. 513,244
1 Claim. (Cl. 164—71)

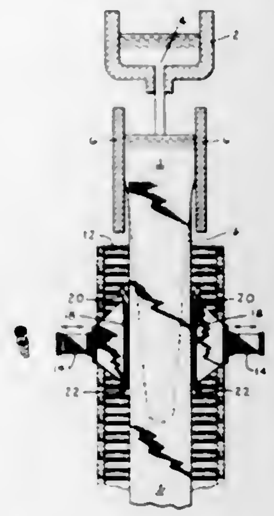

Vibrations are applied to a slab of cast metal emerging from a continuous-casting mold at a position along the slab at which the interior of the slab is still molten. The frequency of the vibrations are adjusted to be in resonance with the portion of solidified metal skin around the slab between the position at which the vibrations are applied and the point at which the skin is formed in the mold; the amplitude of the vibrations are adjusted to agitate the surface of the molten metal in the mold.

3,397,734
POLYBUTENE CONTINUOUS METAL CASTING LUBRICATION PROCESS
John S. Brown, Flossmoor, Ill., assignor to Standard Oil Company, Chicago, Ill., a corporation of Indiana
No Drawing. Filed May 31, 1966, Ser. No. 553,699
2 Claims. (Cl. 164—73)

1. In the continuous process of casting ferrous metals wherein molten ferrous metal is initially shaped in a water-cooled mold, the step of introducing a liquid polybutene, having a viscosity in Saybolt Seconds Universal (SSU) at 210° F. of from about 30 to about 22,000, between the molding surface and molten metal to prevent adherence of the metal to the molding surface.

3,397,735
PULL AND SPRAY STATION FOR CENTRIFUGAL CASTING MACHINE
Russell W. Taccone, Erie, Pa., assignor to Shahmoon Industries, Inc., New York, N.Y., a corporation of Delaware
Filed Oct. 23, 1965, Ser. No. 503,942
9 Claims. (Cl. 164—267)

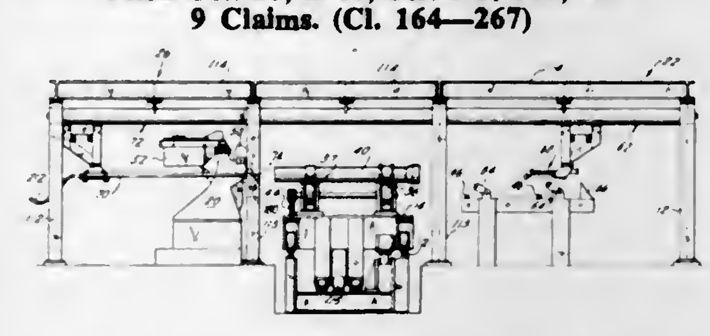

A pull and spray station is provided for a centrifugal casting machine having a spin mold for the manufacture of pipe. The station has a pipe puller head at one end of

the mold, a mold spray lance at the other end of the mold, a motive means to move the puller head, and a motive means to move the lance. Each motive means comprises an axially movable hydraulic cylinder and guide tube longitudinally slotted to receive an upright fin plate secured to its cylinder and on which a puller head or lance is mounted for connection to its respective cylinder.

3,397,736
APPARATUS FOR MAKING THERMO-ELECTRIC ELEMENTS
Israel H. Marantz, Forest Hills, and Daniel R. Marantz, Port Washington, N.Y., assignors to Marantz Industries Corp., Port Washington, N.Y., a corporation of New York
Filed Jan. 25, 1965, Ser. No. 427,690
8 Claims. (Cl. 164—267)

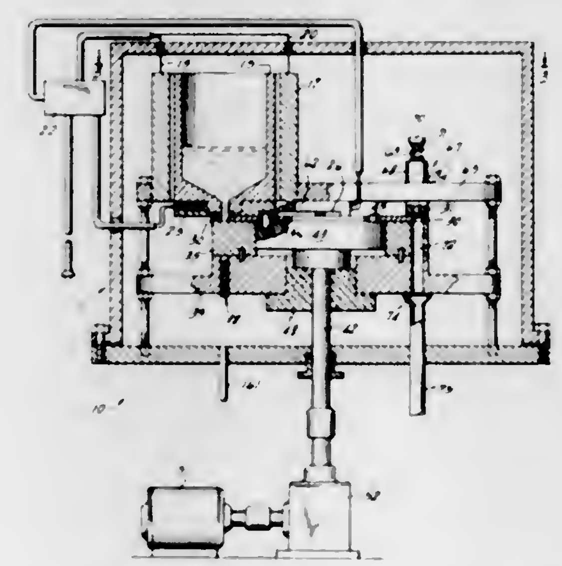

1. Equipment for forming thermoelectric elements, said equipment comprising mold means in which pellets of thermoelectric material are cast, means providing progressive cooling of said cast pellet from the lower end to the upper end thereof, solder coating means for applying a solder coating at two spaced points on the pellets cast in said mold means, and enclosure means enclosing said mold means and said solder coating means in an inert atmosphere.

3,397,737
FOUNDRY MOLD CONVEYING APPARATUS WITH PNEUMATIC DIAPHRAGM CLAMPING MEANS
Wainwright Tuttle, Cincinnati, Ohio, assignor to Altamil Corporation, Indianapolis, Ind., a corporation of Delaware
Filed Aug. 3, 1965, Ser. No. 476,970
12 Claims. (Cl. 164—327)

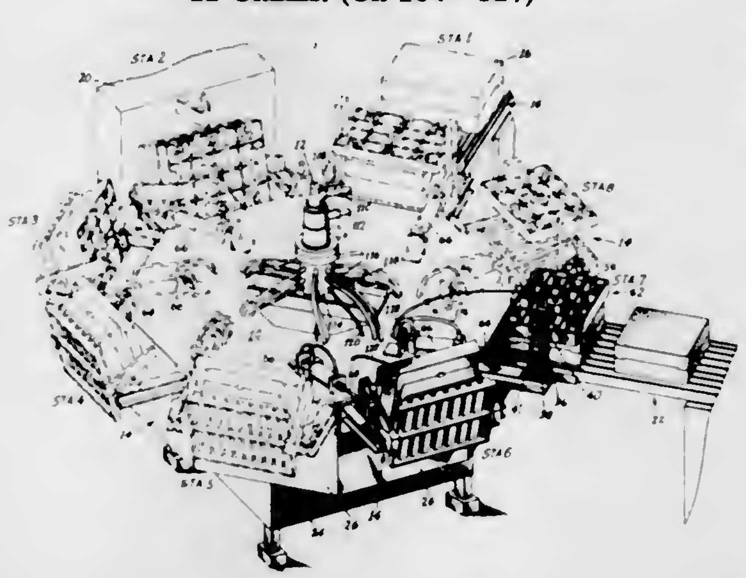

Casting conveyor including circular carrier having several mold clamping fixtures each utilizing a pneumatic diaphragm clamping apparatus mounted thereon, wherein the clamping fixtures are sequentially tiltable from a horizontal loading position to a vertical pouring position, and the clamping mechanism actuated, as the carrier rotates. The fixtures are returned to the horizontal position and unclamped when the fixture reaches a discharge station.

3,397,738
REGENERATOR MATRIX SYSTEMS FOR LOW TEMPERATURE ENGINES
John G. Daunt, New York, N.Y., assignor to Malaker Corporation, High Bridge, N.J., a corporation of New Jersey
Filed Aug. 19, 1965, Ser. No. 481,051
2 Claims. (Cl. 165—10)

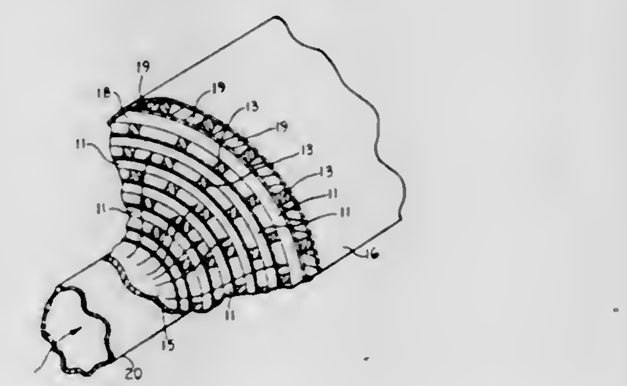

This invention relates to the regenerators and matrices used therein, employed in cryogenic engines, such as those of the modified Stirling cycle type, and through which the working fluid (such as helium) is recycled. These matrix materials are solid masses having open channeling means which, in turn, have an average maximum geometric configuration such that the heat absorbed by the matrix from the fluid passing once therethrough is able to diffuse thermally along average paths (in the matrix) having average lengths approximating the thermal diffusion depth in the matrix material for the operating temperature range and for the fluid single passage period through the regenerator.

Such a matrix system can consist of strips coiled around an axially directed plug centrally disposed in the regenerator, the coil layers being separated by ribs of thermal insulating material. A series of spaced strips of matrix material, such as lead, are adhered circumferentially onto the bottom surface of the sheet. Another matrix system consists of adjacently-disposed one-piece slices of solid matrix material having a solid peripheral body and an inner integrally-connected screening of the same material, the screening having channeling means through which the operating fluid is cycled.

3,397,739
HEAT EXCHANGE APPARATUS
Marvin Miller, Fair Lawn, N.J., assignor to Sibany Manufacturing Corporation, Fair Lawn, N.J., a corporation of New Jersey
Continuation-in-part of application Ser. No. 368,153, May 18, 1964. This application May 12, 1965, Ser. No. 455,249
22 Claims. (Cl. 165—86)

A heat exchange apparatus having a rotatable shaft, heat exchangers mounted on either end of the shaft for rotation therewith, a compressor conduit mounted about the shaft, fluid conduits extending through the shaft and

connecting the heat exchangers and compressor conduit together in series and pressure means for pumping fluid

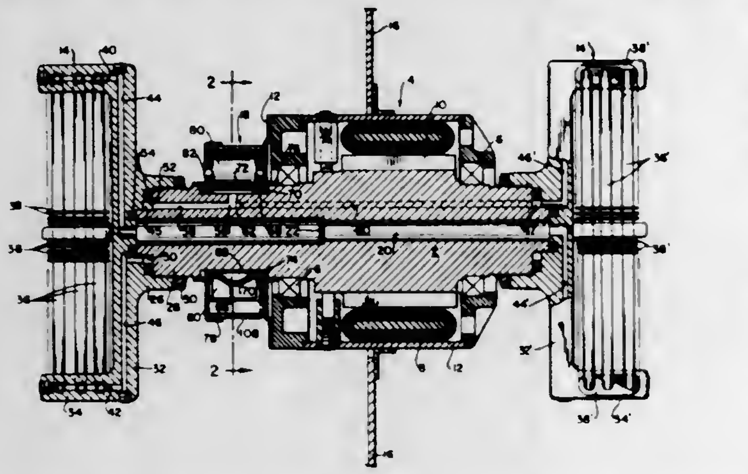

through the conduits and heat exchangers upon rotation of the shaft.

3,397,740
AIR CONDITIONING UNITS
Arthur C. O'Hara, Syracuse, N.Y., assignor to Carrier Corporation, Syracuse, N.Y., a corporation of Delaware
Filed Dec. 10, 1965, Ser. No. 512,951
2 Claims. (Cl. 165—123)

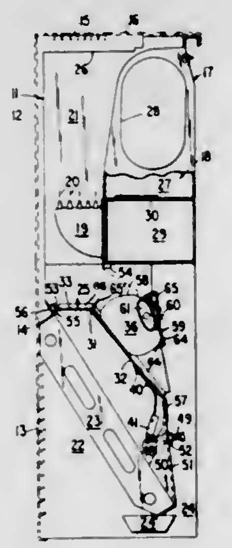

An induction type room terminal for use in an air conditioning system employing an improved bypass damper utilizing spring means to bias the damper open and serve as the hinge therefor.

3,397,741
PLATE FIN TUBE HEAT EXCHANGER
Addison Y. Gunter, Houston, Tex., assignor to Hudson Engineering Corporation, Houston, Tex., a corporation of Texas
Filed Feb. 21, 1966, Ser. No. 528,996
1 Claim. (Cl. 165—152)

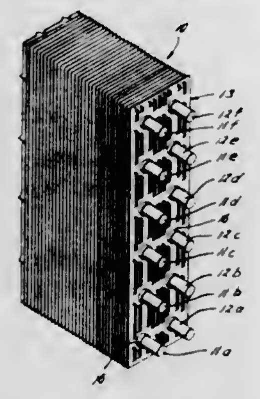

A tube module for use in heat exchangers in which the tubes are disposed "in line" with air flow therepast, and each fin comprises a plate having an interrupted surface within an area bounded by lines through the centers of tubes of adjacent laterally and longitudinally extending rows of tubes. Each such interrupted surface is spaced from the tubes and is discontinuous from each other interrupted area. In a preferred embodiment of the module, each interrupted area comprises one or more louvers extending parallel to the lines through the centers of the longitudinally extending rows of tubes.

3,397,742
PLATE HEAT EXCHANGER
Sverre Knut Jenssen, Saltsjobaden, Ake Birger Ljungstrom, Stockholm, and Bengt-Ake Ohlsson, Lund, Sweden, assignors to Alfa-Laval AB, Tumba, Sweden, a corporation of Sweden
Filed Dec. 23, 1965, Ser. No. 515,827
Claims priority, application Sweden, Dec. 29, 1964, 15,740
6 Claims. (Cl. 165—167)

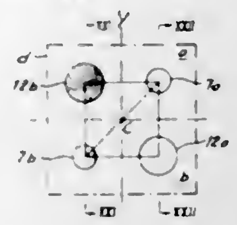

Substantially identical heat transfer plates are held side-by-side in a pack to form interspaces between adjacent plates, the plates being ported and adapted to coact with marginal packings in the interspaces to define flow channels for passage of the heat exchange media through the pack; and adjacent plates have spacing projections and supporting surfaces adapted to abut each other in the interspaces, the projections also forming supporting surfaces. To enable variations in the spacing between adjacent plates, each plate is provided with such spacing projections and has its supporting surfaces situated in different planes parallel to the main plane of the plate; and the projections and supporting surfaces are distributed on the plate in a pattern such that when two adjacent plates are assembled side-by-side (as in the pack of plates) but in first and then in second relative positions, a spacing projection which in the first relative positions is adapted to abut a supporting surface situated in one plane is adapted in the second relative positions to abut a supporting surface situated in a different plane.

3,397,743
REMOVAL OF FOREIGN ELEMENT FROM A WELL
Horace B. Bryant, Jr., Houston, Tex., and Lyle T. Coffman, Glenville, W. Va., assignors to Air Reduction Company Incorporated, New York, N.Y., a corporation of New York
Filed Apr. 19, 1965, Ser. No. 449,219
9 Claims. (Cl. 166—42)

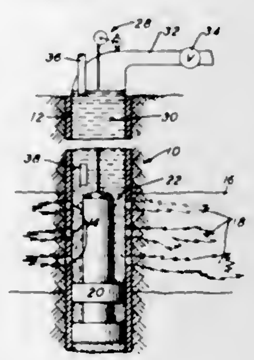

The subject matter relates to a method and apparatus for assisting in the removal of tools which have become stuck in a well. Generally, tools become stuck due to accumulations of sand or other granular material which jam or block the tool and prevent proper operation or removal. By pressurizing the material in the area of the blockage with gas and then reducing the pressure, the material may be at least partly removed.

3,397,744
METHOD AND COMPOSITION FOR FRACTURING PERMEABLE EARTH FORMATIONS
Eugene V. Hort, Easton, Pa., and Carl A. Bergman, Basking Ridge, N.J., assignors to GAF Corporation, a corporation of Delaware
No Drawing. Filed Oct. 28, 1965, Ser. No. 505,452
8 Claims. (Cl. 166—42)

A method and composition for fracturing a permeable subsurface earth formation wherein a fracturing agent is pumped into a well bore, said fracturing agent consisting of compositions of catalytically cross-linked polyvinyl pyrrolidone polymers and sand grains.

3,397,745
VACUUM-INSULATED STEAM-INJECTION SYSTEM FOR OIL WELLS
Carl W. Owens and Benjamin D. Owens, Long Beach, Calif., assignors, by direct and mesne assignments, of thirty percent each to Carl Owens, M. Dudley Hughes, and Viviane Caskey; five percent each to James J. Baker and Jack Owens, all of Long Beach, Calif.
Filed Mar. 8, 1966, Ser. No. 532,780
6 Claims. (Cl. 166—57)

In an apparatus for delivering a heated fluid to a subterranean productive formation having a well drilled thereinto, the combination of an inner, injection tubing in the well and communicating at its lower end with the productive formation, an outer, insulating tubing surrounding said injection tubing and having an inside diameter greater than the outside diameter of said injection tubing to provide a space between said insulating and injection tubings, means closing the upper and lower ends of said space, means connected to the upper end of said injection tubing for introducing a heated fluid thereinto, means connected to the upper end of said space for at least partially evacuating same, said means closing the lower end of said space including packer means carried by the lower portion of one of said tubes and slidably engaging and sealing with the other of said tubes to accommodate relative longitudinal expansion and contraction of said tubings, and means maintaining the tubings in radial spaced relationship.

3,397,746
CIRCULATING MILL GUIDE
Charles J. Link, Long Beach, Calif. (% Directional Service Co. of Peru, P.O. Box 80, Talara, Peru)
Filed Dec. 30, 1965, Ser. No. 517,720
3 Claims. (Cl. 166—117.6)

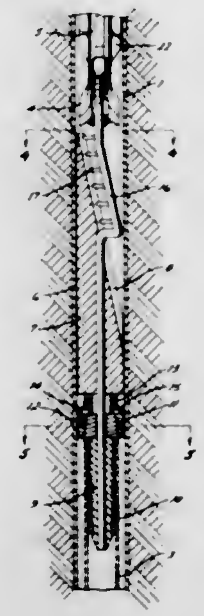

When a mill guide is positioned in the casing of an oil well it is frequently desirable to circulate vertically through this guide for cementing and other purposes. A tubular structure in my invention is mounted on the mill guide and circulation can be carried on through this tube when necessary.

3,397,747
DIRECT CONNECTED IMPLEMENT CARRIER
Raymond F. Roberson, Plainfield, Ill., assignor to International Harvester Company, Chicago, Ill., a corporation of Delaware
Filed Aug. 6, 1965, Ser. No. 477,823
6 Claims. (Cl. 172—467)

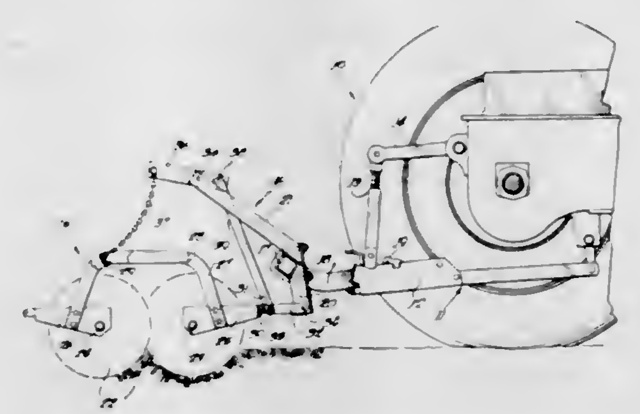

1. Apparatus for connecting an implement to a tractor having a drawbar pivotally connected to the tractor and power lift means connected to the drawbar to vertically swing the latter about its pivotal connection to the tractor between positions corresponding to operating and transport positions of the implement comprising, means forming a floating connection between the forward portion of the implement and the drawbar to accommodate vertical movement of said front end of the implement relative to the drawbar, said drawbar including a member extending upwardly therefrom, a rockable member pivotally mounted on said upwardly extending member and having a lifting connection to the rear portion of the implement, and another lifting connection between said rockable member and the forward portion of the implement to raise the latter relative to the drawbar upon raising the drawbar about its pivotal connection to the tractor.

3,397,748
SOIL TREATMENT DEVICE
Jack C. Whitesides, Albany, Ga., assignor to Lilliston Implement Company, Albany, Ga., a corporation of Georgia
Filed Sept. 2, 1964, Ser. No. 393,852
2 Claims. (Cl. 172—548)

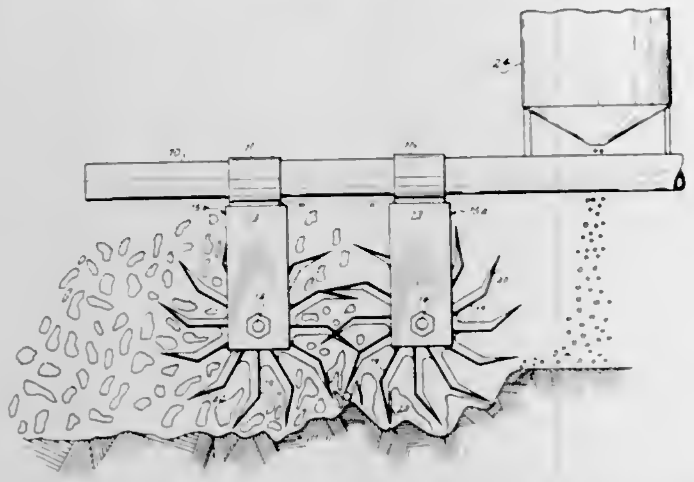

1. A soil treatment device comprising a tandem gang arrangement of rotary hoes adapted to be connected to a cultivator rig, including means for moving at least one gang arrangement through a vertical arc independently of movement of the other gang arrangement, said hoes having a hub portion and a plurality of tines, said tines having a central portion and a peripheral portion, said central portion connected to and extending radially outwardly from said hub portion and said peripheral portion connected to said central portion and extending on an angle therefrom, the peripheral portion of said hoes on the front gang being arranged to lag the central portion thereof, and the peripheral portion of said hoes on the rear gang being arranged to lead the central portion thereof during rotation.

3,397,749
TOOL SUPPORT ARRANGEMENT
Gerald M. Haskins, Hendersonville, and Robert L. Durham, Flat Rock, N.C., assignors to General Electric Company, a corporation of New York
Filed Mar. 21, 1967, Ser. No. 624,822
8 Claims. (Cl. 173—163)

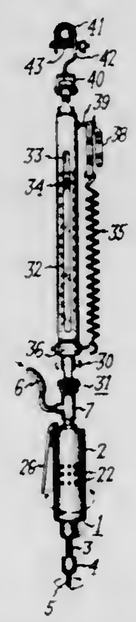

Support for suspending a rotatable air-driven tool such as a screw driver from a fixed support comprises telescoping support mmebers held against relative rotation and urged together by a spring adjustably connected to one member by a slidable collar and to the other member by an adjustable chain to enable positioning tools of various weights at the desired height while preventing turning of the tool housing when held during use.

3,397,750
ICE TRIMMING DEVICE
Roy C. Wicklund, Boxholder 2, Alexandria, Minn. 56308
Filed Dec. 13, 1965, Ser. No. 513,264
5 Claims. (Cl. 175—18)

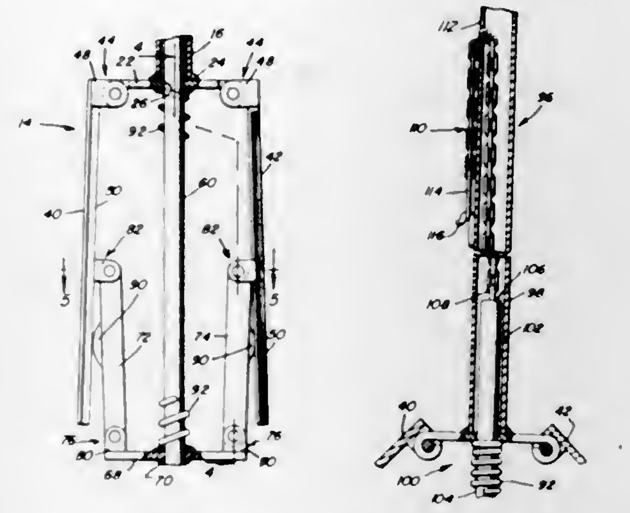

A device for chamfering the lower end of an ice hole comprising an elongated tubular body having pivotally mounted blades at the lower end thereof, and an actuator bar extending through said body and operatively engaged with said blades for effecting an extension of the blades upon the introduction of the lower end of the tubular body through an ice hole. The extended blades, upon a rotation of the tubular body, chamfer the bottom of the ice hole and are subsequently, through a movement of the actuator bar, collapsed for withdrawal through the ice hole.

3,397,751
ASYMMETRIC THREE-CONE ROCK BIT
Donald R. Reichmuth, Austin, Tex., assignor to Continental Oil Company, Ponca City, Okla., a corporation of Delaware
Filed Mar. 2, 1966, Ser. No. 531,301
12 Claims. (Cl. 175—341)

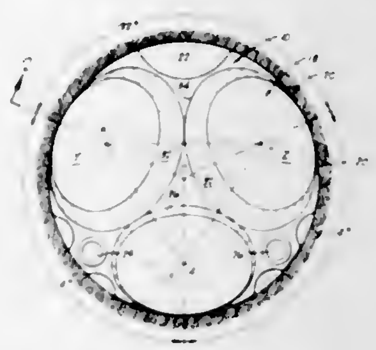

A three-cone rock drill bit having one roller cone of smaller diameter than the other two roller cones to provide asymmetric positioning of the roller cones around the vertical axis, the axis of rotation of each cone being inclined to form the same angle with the vertical axis and pass through a common point on the vertical axis, the teeth of the smaller cone interfitting with each of the two larger cones, and a large return port for drilling fluid between the two larger roller cones.

3,397,752
ARTICULATED FRAME STEER TRACTOR
Karl Salna, Mundelein, Ill., assignor to International Harvester Company, a corporation of Delaware
Continuation of application Ser. No. 420,683, Dec. 23, 1964. This application July 15, 1966, Ser. No. 565,655
1 Claim. (Cl. 180—51)

1. In a four-wheel-drive, articulated vehicle including a front frame section supporting a control console including a steering wheel and an operator's seat rearwardly of said control console and a rear frame section supporting a power plant; a rear wheel truck including a pair of laterally spaced, ground-engaging wheels mounted for rotation about a single transversely extending axis, said rear wheel truck being connected to said rear frame section for relative rocking movement about an axis extending longitudinally of said rear frame section; a front wheel truck including a pair of laterally spaced, ground-engaging wheels mounted for rotation about a

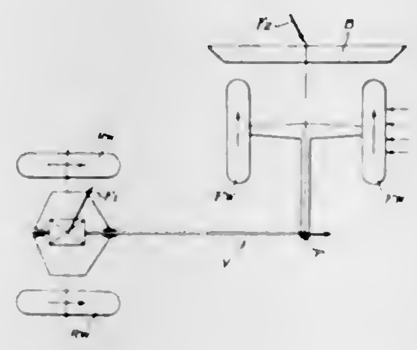

single transversely extending axis, said front wheel truck being substantially rigidly connected to said front frame section; and means for pivotally connecting said front and rear frame sections together for relative movement about an axis of articulation, said axis of articulation intersecting the longitudinal median line of said rear frame section and extending vertically upwardly and horizontally rearwardly from the point of intersection of said articulation axis and said rear frame section longitudinal median line.

3,397,753
GAS-CUSHION VEHICLES WITH FLEXIBLE SKIRTS
Rowland Delville Hunt, Hythe, Southampton, and Alan Ritson Tripp, Hedge End, Southampton, England, assignors to Hovercraft Development Limited, London, England, a British company
Filed Feb. 17, 1966, Ser. No. 528,238
Claims priority, application Great Britain, Feb. 24, 1965, 7,946/65
12 Claims. (Cl. 180—127)

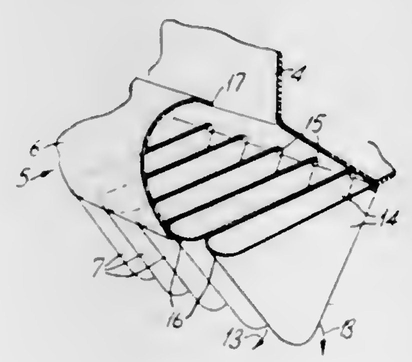

An air-cushion vehicle is provided with a cushion-containing flexible wall or skirt which "follows" irregularities on the surface over which the vehicle travels. The skirt is of two-stage form, each stage being inflatable and formed so that inflation forces applied thereto tend to deflect the upper stage upwardly and the lower stage downwardly so as to place the skirt in an equilibrium position. The upper stage comprises a looped sheet of flexible material which bulges outwardly beyond the lower stage, and the lower stage comprises a succession of individual wall members of U-like lateral cross section.

3,397,754
AMBIENT SEISMIC NOISE ELIMINATION USING HORIZONTAL COMPONENT ENERGY
Robert B. Roden, Irving, Tex., assignor to Texas Instruments Incorporated, Dallas, Tex., a corporation of Delaware
Filed Dec. 23, 1966, Ser. No. 604,418
8 Claims. (Cl. 181—.5)

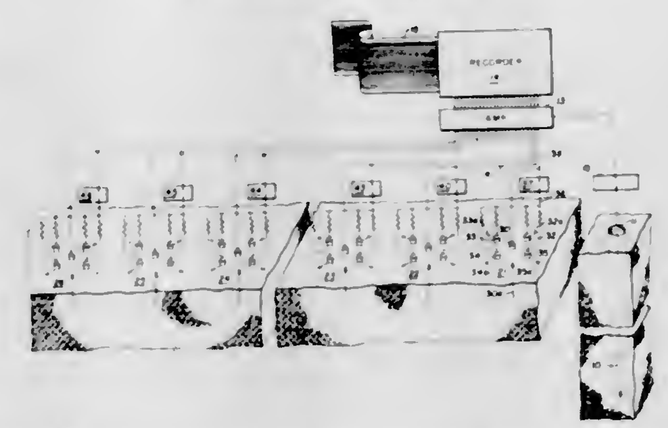

Signals from horizontal component seismometers are filtered in dependence upon the coupling between horizontal and vertical components of ambient seismic noise and then mixed with the output signal from a vertical seismometer to enhance the vertically incident P-waves while preserving the form of the P-wave signal.

3,397,755
PNEUMATIC SEISMIC SOURCE
George B. Loper, Duncanville, Tex., assignor to Mobil Oil Corporation, a corporation of New York
Continuation-in-part of application Ser. No. 354,083, Mar. 23, 1964. This application Mar. 14, 1966, Ser. No. 534,130
19 Claims. (Cl. 181—.5)

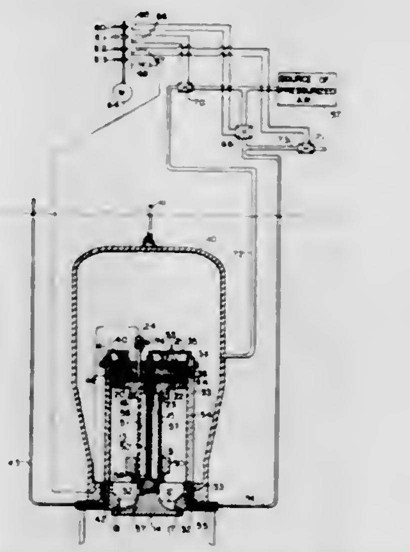

The specification discloses a repetitive marine seismic source formed by a rigid chamber for confining high pressure gases and having a controllable spool-shaped valve for rapidly releasing the high pressure gases into the water to generate an acoustic pulse. The chamber may be pressurized by injecting only compressed air or by injecting compressed air and diesel fuel for forming a combustible mixture which is ignited.

3,397,756
REDUCTION OF EXPLOSIVE SHOCK AND NOISE BY DISPERSION OF WATER PARTICLES
Alday B. Andrews, Woodbury, N.J., and David L. Coursen, Newark, Del., assignors to E. I. du Pont de Nemours and Company, Wilmington, Del., a corporation of Delaware
Filed July 29, 1965, Ser. No. 475,719
11 Claims. (Cl. 181—33)

1. A process for reducing the shock and noise caused by detonation of a main explosive charge which comprises

interposing a body of dispersed water particles in the path of the shock wave from said main explosive charge, said

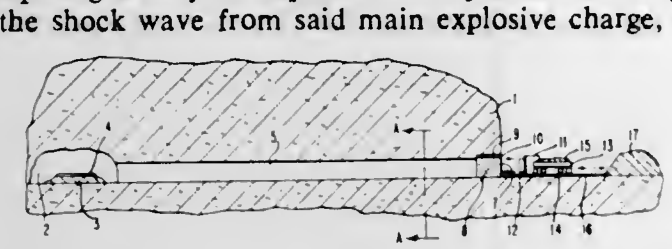

water being propelled into said path by a dispersing explosive charge spaced apart from the main charge.

3,397,757
COMBINATION WASTE DISPOSAL AND STEP STOOL DEVICE
Harold M. Greer, 17 Hightop Lane, Jericho, N.Y. 11753
Filed Dec. 9, 1966, Ser. No. 600,519
4 Claims. (Cl. 182—33.5)

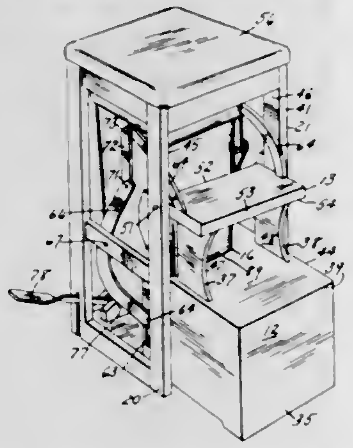

A combination waste disposal and step stool including a generally rectangular frame, and a step element mounted for rectilinear movement into and out of said frame, a waste disposal unit positioned within said frame, said step element being clear of contact with said waste disposal element when moved within said frame to occupy an inoperative position.

3,397,758
PRESSURE-FLUID-ACTUATED CLOCKWORK WINDING MECHANISM
Charles R. Porter, Houston, Tex., assignor to Loyd R. Goodwin, Fort Worth, Tex.
Filed Apr. 25, 1966, Ser. No. 544,997
2 Claims. (Cl. 185—40)

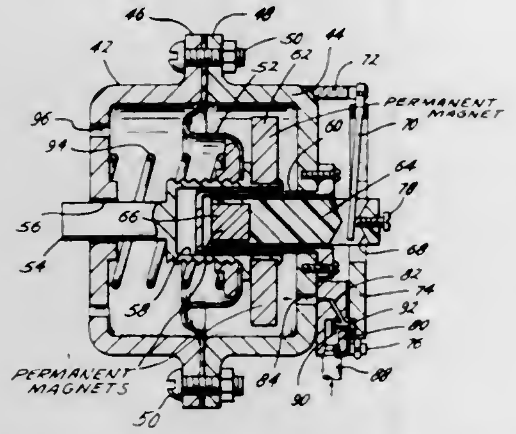

Clockwork winding mechanism for operation by fluid under pressure having a pressure fluid housing provided with a movable member in and dividing the interior of the housing transversely and including driving means for winding a clock spring in response to movement of the member in one direction and which permits movement of the member in the other direction independently of the driving means. The mechanism also includes permanent magnetic means positioned for coaction with the housing and movable member to control the inflow and outflow of pressure fluid into and out of the housing on one side of the movable member and yieldable means positioned for coaction with the housing and movable member on the other side of the member to cause the member to move back and forth to wind the clock spring.

3,397,759
VELOCITY LIMITER
Bruce F. McClintic and Robert L. Hughes, San Jose, Calif., assignors to General Electric Company, New York, N.Y., a corporation of New York
Filed Sept. 15, 1965, Ser. No. 487,438
7 Claims. (Cl. 188—96)

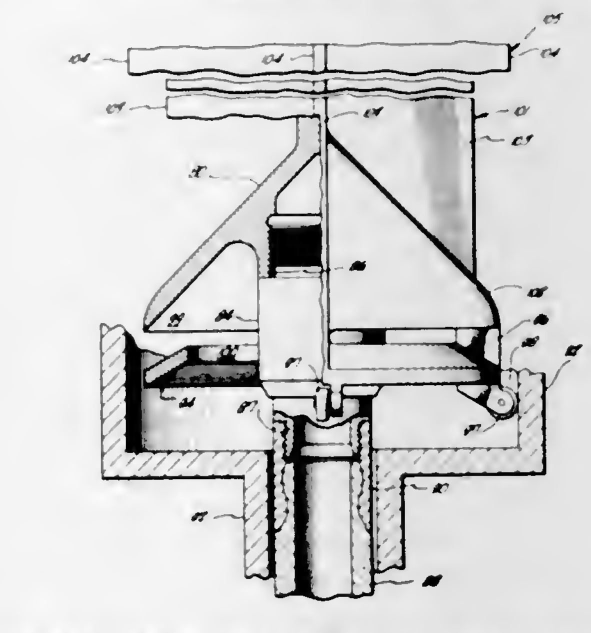

This describes a velocity limiting device comprising a fluid filled guide channel containing a control member which is reciprocable in the guide channel. A gap is provided for passage of the fluid from one side of the control member to the other as the control member moves within the guide channel. Means are provided to generate more turbulence in the fluid flowing through said gap in one direction than in the other whereby the resistance to the movement of the control member is greater in said one direction.

3,397,760
SEGMENTED FRICTION MEMBER
David W. Robins and William Edwin Ely, Troy, Ohio, assignors to The B. F. Goodrich Company, New York, N.Y., a corporation of New York
Filed July 5, 1966, Ser. No. 562,568
7 Claims. (Cl. 192—107)

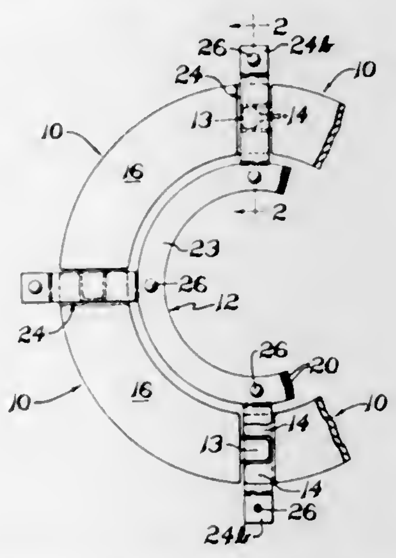

A segmented friction disc member for use as a rotor or stator in a disc brake assembly composed of a plurality of arcuate friction lining segments which are aligned end to end in an annular assembly by interfitting mating ends on each of the segments and a spider retainer having radial projections with each of the projections loosely embracing the mated interfitting segment ends to loosely restrain the annular arrangement of segments to provide the composite segmented brake disc member.

3,397,761
FRICTION PLATE EMPLOYING SEPARATOR MEANS
Terry K. Lindquist, Crestwood, Ill., assignor to Borg-Warner Corporation, Chicago, Ill., a corporation of Illinois
Filed Feb. 10, 1966, Ser. No. 526,441
1 Claim. (Cl. 192—107)

An elastomeric material extends through the driven member of a clutch assembly with surfaces normally extending beyond the radially disposed surface of the friction facing material, such that as the clutch is engaged, the elastomeric material is compressed and as the clutch is disengaged the elastomeric material is effective to provide a separating force between the drive and driven members.

3,397,762
DEVICE FOR THE AUTOMATIC DISTRIBUTION OF A STREAM OF POWDERED OR GRANULAR MATERIAL AND ITS APPLICATION TO A HIGH-OUTPUT LOADING PLANT IN WHICH SAMPLING IS EFFECTED EITHER CONTINUOUSLY OR AT REGULAR INTERVALS
Eugene Camille Saint-Jacques, 11 Rue Marbeau, Paris 16eme, France
Filed Nov. 23, 1966, Ser. No. 596,499
Claims priority, application France, Nov. 10, 1966, 83,308
3 Claims. (Cl. 193—21)

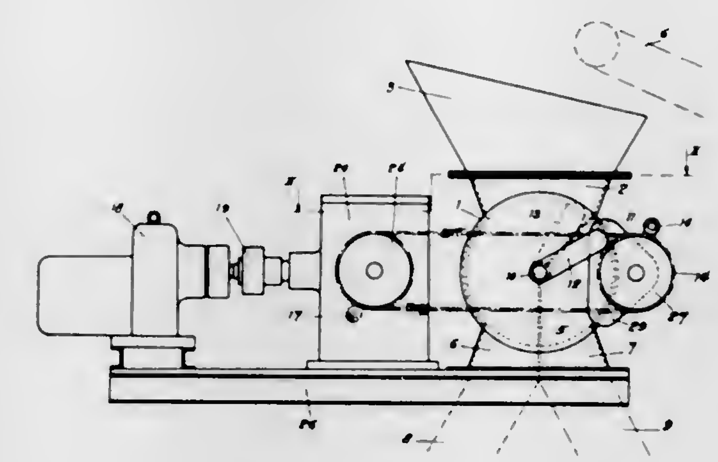

A hopper having a single top inlet and a transfer section which is divided at the botom by a partition wall to define two outlets. A shutter is mounted within the transfer section to effect the automatic distribution of a stream of powdered or granular material first through one outlet and then the other outlet.

3,397,763
MULTIPLE TRANSACTION VENDING MACHINE
Eric C. Wahlberg, 32 8th St., Stamford, Conn. 06905
Filed July 8, 1966, Ser. No. 563,834
14 Claims. (Cl. 194—4)

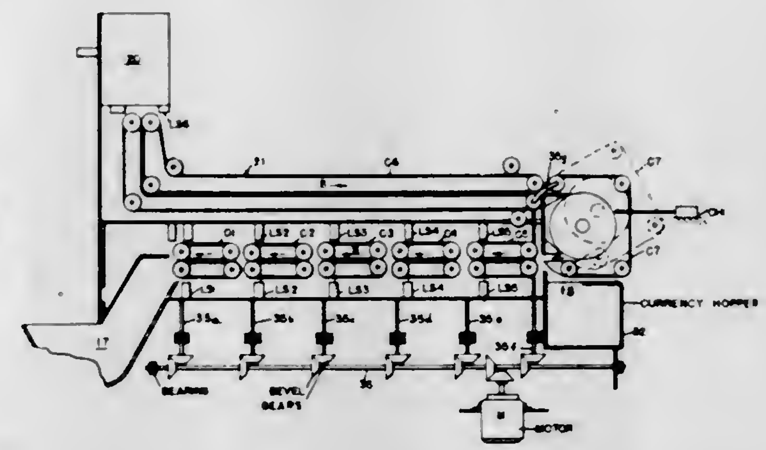

A vending machine for dispensing change and selected goods after totaling the cost of the selected goods and comparing the total cost with the total money received by the machine wherein dispensing tubes are utilized to store coins received by the machine, dispensing conveyors are utilized to store bills received by the machine and the dispensing tubes and conveyors are also used to dispense change for later transactions.

3,397,764
ARTICLE DELIVERY SYSTEM
Luther G. Simjian, Laurel Lane, Greenwich, Conn. 06830
Filed Nov. 30, 1966, Ser. No. 598,027
12 Claims. (Cl. 194—4)

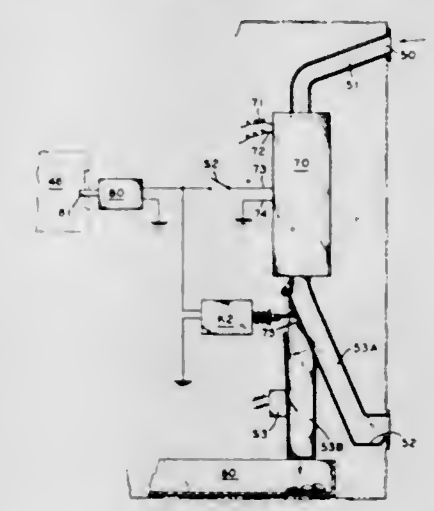

An article delivery system comprising a supervisory station having check storage and dispensing means, and an article delivery station having locked compartments for receiving articles, each compartment being operable for article withdrawal by a respective check issued at the supervisory station. Upon depositing the proper check and withdrawal of the article, the used check is stored and rendered inaccessible, while a new check is available for issuance at the supervisory station.

3,397,765
COIN OPERATED LOCK
Joseph Austin Smith, 1 Nob Hill, Loudonville, Ohio 44842
Filed Aug. 4, 1966, Ser. No. 570,267
18 Claims. (Cl. 194—59)

The invention relates to a coin operated lock having a housing, a lock bolt movable in said housing between first and second positions, one of said positions being a locked

position of said lock bolt cooperating with a first member and the other being an unlocked position, actuator means to move said lock bolt, coin retention means to retain a coin in an operative position in said housing, and latch means interacting between said housing and said lock bolt to prevent movement of said lock bolt from said first to said second position in the absence of a coin in said operative position, wherein the improvement comprises, in combination, a receptor movable relative to the lock bolt generally in the same path as the movement of the lock bolt, the coin retention means including a surface on said receptor and a surface on the lock bolt, a cam follower connected to act on the latch means, means connecting the actuator means to move said receptor, the presence of a coin in the operative position camming said cam

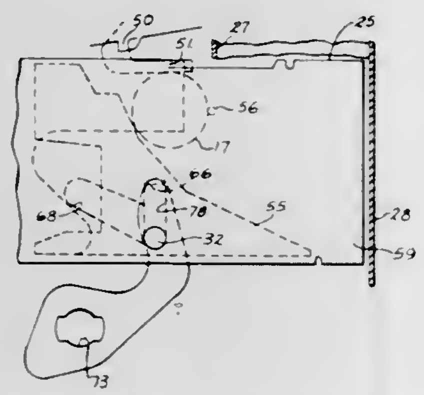

follower to invalidate the latch means as the actuator means is moved through an operating path and the lock bolt is moved from said first toward said second position to thus permit complete movement of the lock bolt from said first to said second position, the movement of the actuator means through said operating path in one direction causing the lock bolt and said receptor to move substantially the same distance, lost motion means between the actuator means and the lock bolt, and return movement of the actuator means through said operating path first returning said receptor without return movement of the lock bolt because of said lost motion means to thus permit said coin in said operative position to move generally lengthwise toward the outboard end of the lock bolt.

3,397,766
PRINTER HAVING PLURAL HAMMERS AND A SINGLE HAMMER ACTUATING MEANS
Hans Spalinger and Walter Reber, Bern, Switzerland, assignors to Hasler A.-G., Bern, Switzerland, a corporation of Switzerland
Filed Feb. 28, 1967, Ser. No. 619,253
Claims priority, application Switzerland, Mar. 1, 1966, 2,948/66
7 Claims. (Cl. 197—57)

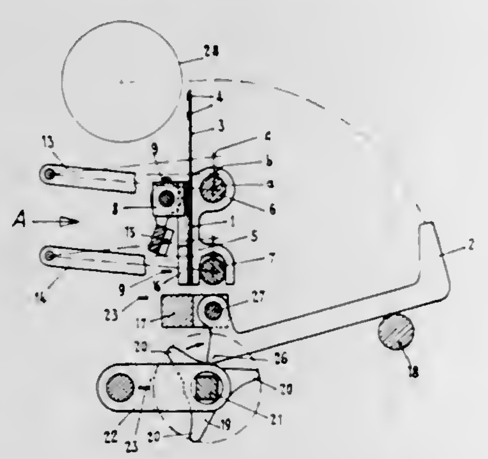

This disclosure provides a printer which has a plurality of hammer means, but only one hammer actuating means. The hammer actuating means is moved into registry with a selected hammer means and then actuates the selected hammer.

3,397,767
ERASURE TAPE MECHANISM FOR TYPEWRITERS
Robert B. Hobbs, 8933 S. Vermont Ave., Los Angeles, Calif. 90044
Filed Sept. 7, 1965, Ser. No. 485,324
1 Claim. (Cl. 197—181)

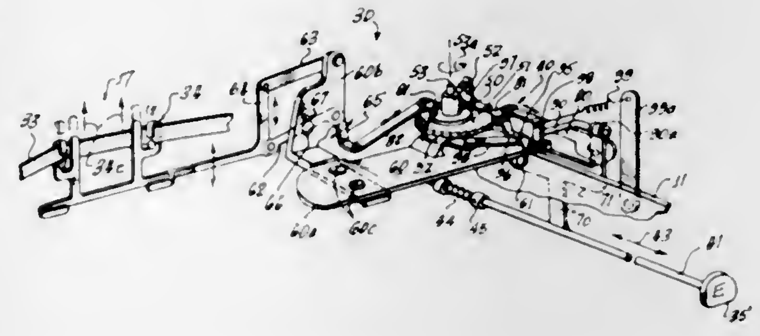

An erasure tape attachment for installing in an already manufactured typewriter without any alteration in the operation of said typewriter, the attachment comprising erasure tape reels, a tape feed ratchet, a tape lifter for raising and holding said tape between the printing ribbon and paper during typewriter operation, and a specially installed erasure key which operates said tape feed ratchet and said tape lifter independently of the operation of the pre-existing typewriter.

3,397,768
VIBRATIONAL FEEDING DEVICES
Clifford A. Haumiller, 960 E. Chicago, St., Elgin, Ill. 60120
Filed June 3, 1966, Ser. No. 555,063
2 Claims. (Cl. 198—220)

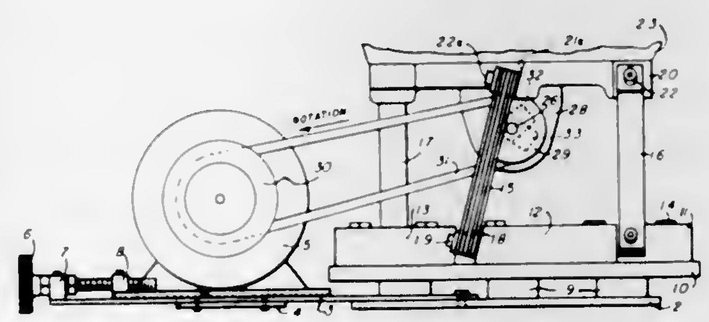

A vibratory feeding device for feeding parts from a hopper to a discharge point using eccentric weights on a rotating shaft and upright heavy springs under the hopper to cause an orbital rotation of the hopper.

3,397,769
WOODSMAN'S MATCH HOLDER
Leonard B. Rosen, Jamestown, Pa., and Martin Green, Mahwah, N.J., assignors to Leonard B. Rosen, Jamestown, Pa., and Martin Green, Mahwah, N.J., as partners
Filed Jan. 9, 1967, Ser. No. 608,195
4 Claims. (Cl. 206—20)

In a match box or book of matches one or more chambers are provided for insertion therein of spent matches. In a match box, there is one chamber defined by a lining spread over the bottom of the match container. Matches

are inserted into the chamber through an opening at one end of the container. In a book of matches, a lining

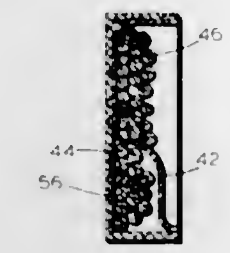

and corrugation is provided inside the cover and spent matches are inserted in between the corrugations.

3,397,770
DISPENSING CONTAINER
Charles S. Howard, 976 W. 9th St., Upland, Calif. 91786, and Gerald A. Rudolph, Covina, Calif. (3521 W. Beverly Blvd., Montebello, Calif. 90640)
Filed Aug. 28, 1967, Ser. No. 663,722
5 Claims. (Cl. 206—42)

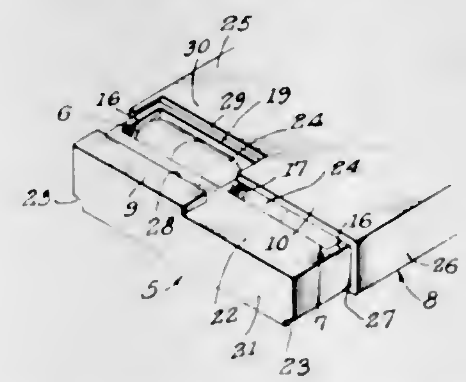

A rectangular receptacle provided with two rows of article-holding cavities that are transversely aligned, one end of the receptacle being provided with an abutment at the end of one row of cavities; and a cover slidingly engaged with the receptacle to cover the cavities to keep the articles therein in place, one end of the cover having a notch therein in operative association with said abutment, thereby defining an extension on the cover that is aligned with the other row of cavities. When the cover is slid back so the notch therein fully exposes the first cavity of the row aligned therewith, so that an article in said exposed cavity may be dispensed by inverting the container, the cover extension still partly covers the cavity in the second row which is transversely aligned with the exposed cavity, thereby preventing dispensing of the article therein. In this manner, the articles may be alternately dispensed, one or more at a time, alternately, as the cover is retracted.

3,397,771
CONTAINER
Robert C. Fogle, Darien, Conn., assignor to American Machine & Foundry Company, a corporation of New Jersey
Filed July 28, 1965, Ser. No. 475,384
9 Claims. (Cl. 206—45.11)

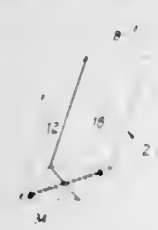

A container comprising two triangular compartments joined by a common hinge, each of said compartments including a cover panel adapted to be moved over the portion of the compartment forming the base of the triangle, and means connecting said compartments being operative when on one side of said common hinge to maintain said compartments in separated open relationship, and when located on the opposite side of said common hinge being operative to maintain said compartments in abutting closed relationship, said connecting means comprising at least one elongated resilient extensible member connected to an end of each of said compartments at a point spaced from said hinge connecting said compartments.

3,397,772
DISPLAY CARTON FOR A BOTTLE-LIKE CONTAINER AND BLANKS FOR MAKING SAME
Melville T. Farquhar, Bon Air, Va., assignor to Reynolds Metals Company, Richmond, Va., a corporation of Delaware
Filed Feb. 9, 1967, Ser. No. 614,902
12 Claims. (Cl. 206—45.14)

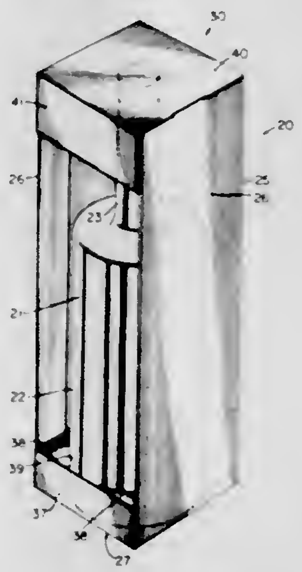

This disclosure relates to a high strength display carton for a bottle-like container which is constructed without requiring additional fastening means, is easily erected by hand, and which defines an attractive shadow box for such container; further, this disclosure relates to improved blanks for making such a display carton.

3,397,773
SPECIAL PACKAGE
John W. Harrison and Robert D. Lowry, Winchester, Mass., assignors to W. R. Grace & Co., Duncan, S.C., a corporation of Connecticut
Filed Dec. 3, 1964, Ser. No. 418,583
9 Claims. (Cl. 206—45.33)

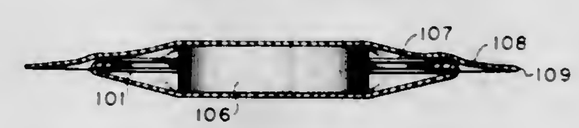

8. A package comprising a first frame member defining an open area, said first frame member having an upper face and a lower face, a first sheet of heat-shrinkable, thermoplastic film positioned against said lower face and tightly drawn across said open area, the peripheral edge of said first sheet drawn around the edge of said first frame member and positioned against the upper face of said first frame member, the peripheral edge of said first film sheet having a smaller perimeter than the largest perimeter of said first frame member, a second frame member similar in size to said first frame member and defining an open area positioned against the upper face of said first frame member enclosing the edge of said first film sheet between

said frame members, a second sheet of heat-shrinkable, thermoplastic film positioned against said second frame member and tightly drawn across the open area defined by said second frame member, the peripheral edge of said second film sheet drawn over the edges of said second and first frame members and positioned against the film-covered lower face of said first frame member, the peripheral edge of said second film sheet having a smaller perimeter than the largest perimeter of said first frame member, and having an object positioned between said taut first and second film sheets within the area defined by said frame members.

3,397,774
CONTAINER
Jan Tjaden, Emden, Germany, assignor to Hoefliger & Karg, Waiblingen, Germany
Filed Aug. 12, 1966, Ser. No. 572,658
Claims priority, application Germany, Aug. 14, 1965, H 56,874
9 Claims. (Cl. 206—45.34)

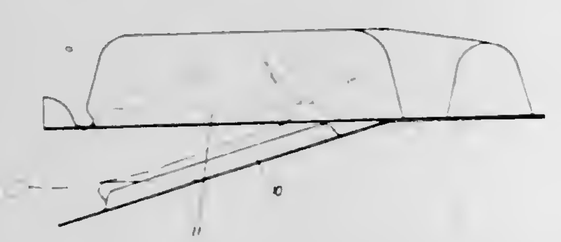

A container having a first body portion which constitutes the shell and which is adapted to receive an object to be packaged. This shell has an open side and comprises a peripheral portion bounding the open side. A second body portion constitutes a lid and comprises a first section which is connected to the peripheral portion and a second section which is integral with the first section, the second section having a permanent tendency to assume one position in which it overlies the open side and being movable with reference to the first section and to the shell to another position in which it is spaced from the peripheral portion so as to permit insertion of an object into, and removal of such object from the container. Finally, there are provided cooperating retaining elements on the shell and on the second section of the lid for releasably holding the latter in one position.

3,397,775
CLIP AND SEAL PACKAGE
Oscar E. Seiferth and Glenn M. Austin, Madison, Wis., assignors to Oscar Mayer & Co., Inc., Chicago, Ill., a corporation of Illinois
Filed Dec. 22, 1965, Ser. No. 515,629
2 Claims. (Cl. 206—46)

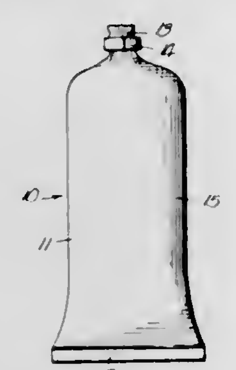

1. A package comprising a flowable product encased in a tubular container which is of pillow-like form and fabricated of a relatively thin, pliant, heat sealable film material, the bottom forming end of said container having a closure forming flat heat seal extending transversely of the longitudinal axis of the container and the top end of said container having top marginal portions of the side wall gathered into a tightly compacted cylindrical tube section and a tie member of relatively rigid deformable material encompassing the gathered tube material and adapted to hold the same in tightly compacted sealed relation, said tie member being adapted to be removed without rupturing the container material so as to enable the package to be readily opened and reclosed.

3,397,776
WRAPAROUND CARTON AND BLANK THEREFOR
Arthur J. Weiss, Bergenfield, N.J., assignor to Continental Can Company, Inc., New York, N.Y., a corporation of New York
Filed Oct. 28, 1964, Ser. No. 406,932
16 Claims. (Cl. 206—65)

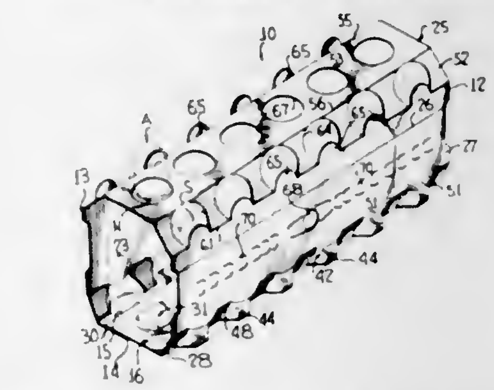

15. A package comprising a wraparound type carton and a plurality of containers disposed therein, each container including a bottom wall, a neck and a pair of diametrically opposite shoulders disposed between said bottom wall and said neck, said shoulders each having generally normally disposed top and side faces, said carton including a top panel and a pair of side panels, said top panel including a central panel portion and a pair of side panel portions joining the central panel portions to the side panels, said side panel portions diverging toward said side panels, a plurality of cutouts formed in each of said side panel portions, each cutout defining a tab portion formed at least partially from the material of said side panel portion lying adjacent each cutout, said containers being disposed in said carton with said shoulders projecting outwardly through associated ones of said cutouts, and each of said tab portions being generally in coplanar relationship relative to its associated side panel and in protective generally parallel overlying relationship to an associated side face of said shoulders.

3,397,777
EMBOSSED SLAB OF GLUE
Joseph F. Stephens, Kansas City, Mo., assignor to Stephens Industries, Inc., Kansas City, Mo., a corporation of Missouri
Filed June 7, 1965, Ser. No. 461,950
11 Claims. (Cl. 206—65)

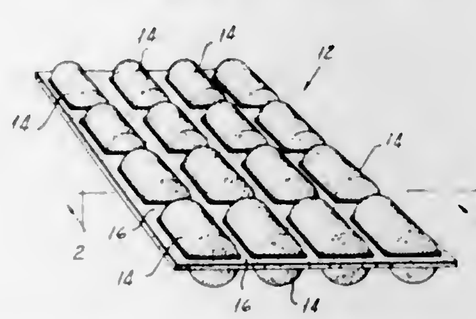

A unitary slab of hot melt adhesive in which a thin frangible web of said adhesive supports a plurality of generally cylindrical pellets of the adhesive in spaced relationship with the pellets arranged in rows and columns to permit a plurality of the slabs to be stacked with minimal contact between adjacent slabs. In use the pellets are broken from the slab and are of such a size as to permit them to be fed into melting apparatus.

3,397,778
ROTARY SUCTION TYPE CLEANING SYSTEM
Elof K. Karlsson, East Moline, Ill., assignor to International Harvester Company, Chicago, Ill., a corporation of Delaware
Filed Mar. 10, 1966, Ser. No. 533,190
10 Claims. (Cl. 209—23)

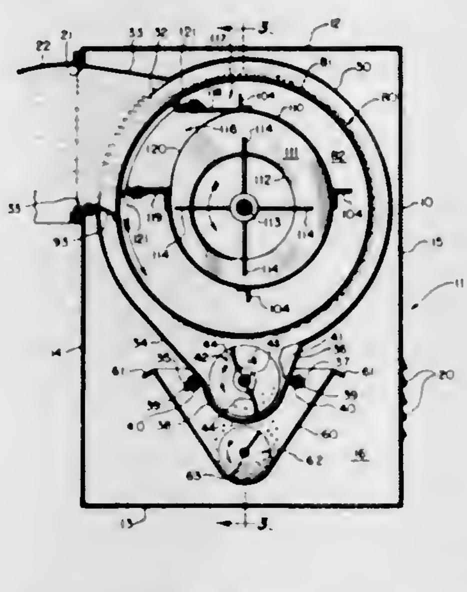

1. A material separating device comprising a frame; an elongated perforated trough adapted to receive uncleaned grain, an agitator supported by said frame and located within said perforated trough; a rotary perforated drum supported by said frame and located over said perforated trough, a fan casing supported by said frame and located within said rotary perforated drum, said fan casing having an opening formed therein in communication with the interior of said rotary perforated drum, said fan casing having a discharge opening formed therein, said discharge opening being located such that it causes a restricted stream of air to be directed against the inner surface of said rotary perforated drum at a location remote from said perforated trough; a clean grain collecting means carried by said frame and located below in a receiving relationship to said perforated trough.

3,397,779
DOUBLE REJECT GATE MECHANISM
Leslie N. Wilder, San Jose, Calif., assignor to Icore Industries, a corporation of California
Filed Dec. 13, 1966, Ser. No. 601,505
7 Claims. (Cl. 209—74)

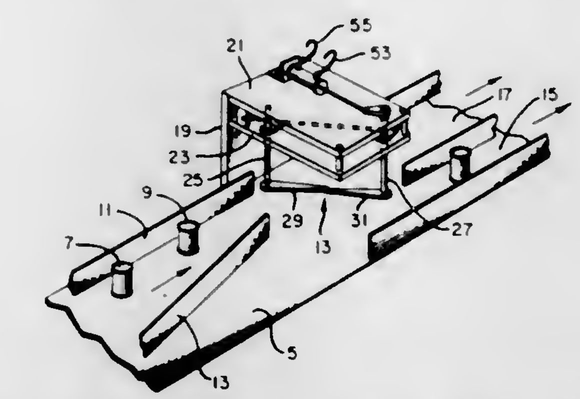

1. In a rejection mechanism wherein articles move over a first path and can be diverted by a gate mechanism into a second path or continue in the first path, the improvement comprising a pair of mating gate elements located at substantially the center of said first path and forming an angle to the path of travel and hinged at opposite sides of the first path and means for moving said gate elements out of said first path to permit articles to pass therethrough.

3,397,780
CLASSIFICATION APPARATUS
Douglas R. Beuzeval, Burgess Hill, England, assignor to Buell Engineering Company, Inc., Lebanon, Pa., a corporation of Delaware
Filed Apr. 25, 1966, Ser. No. 545,098
Claims priority, application Great Britain, Apr. 27, 1965, 17,723/65
8 Claims. (Cl. 209—137)

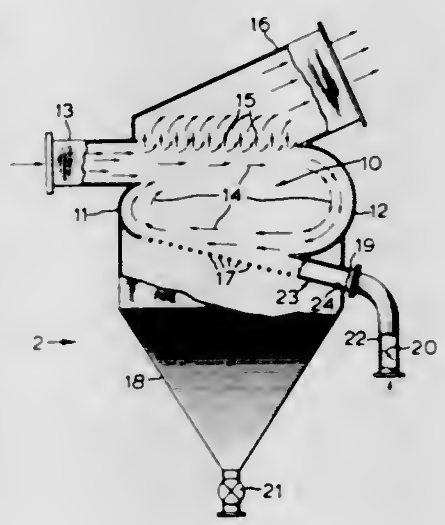

1. Classification apparatus comprising a chamber, an exhaust duct leading from the top of the chamber, a cascade of vanes extending across the duct and defining spaces affording outlet paths from the chamber into the exhaust duct, a lateral inlet for the delivery of particulate material in a fluid stream into the chamber in a direction transversely to the cascade of vanes, whereby fluid flowing from the stream into the exhaust duct makes a rapid change of direction thereby to subject the entrained particulate material to inertial separation, a grid-like floor at the bottom of the chamber below the cascade of vanes and providing access to a closed collector space, and a concave lateral wall extending from the side of the cascade of vanes remote from the lateral inlet towards the adjacent side of the grid for causing a circulation of fluid flowing beyond the cascade of vanes whereby particulate material in the circulatory flow is fractionally retarded by contact with the wall prior to flow of fluid across the grid and whereby any particulate material falling under gravity directly towards the grid is subjected to a scrubbing action by the circulatory flow.

3,397,781
SEPARATOR FOR GRAIN AND THE LIKE
Oskar Allgaier, Wangen Kreis, Goppingen, and Oswald Micko, Geislingen an der Steige, Germany, assignors to Allgaier Werke G.m.b.H., Uhingen, Wurttemberg, Germany
Original application Nov. 6, 1962, Ser. No. 235,613, now patent No. 3,217,561, dated Nov. 16, 1965. Divided and this application Nov. 15, 1965, Ser. No. 507,792
Claims priority, application Germany, Nov. 7, 1961, A 38,766
3 Claims. (Cl. 209—319)

A separator for grain or the like comprising a plurality of sifters each including a cylindrical section of equal diameters and a mesh for sifting grain or the like, the plu-

rality of sifters being arranged coaxially with adjacent cylindrical sections abutting one another, and including clamping means for detachably securing said plurality of sifters together. The clamping means includes a plurality of brackets connected to either the uppermost or lowermost cylindrical section of the uppermost or lowermost sifter, respectively, and each bracket has a longitudinal opening therein which is parallel to the longitudinal axis of the sifters. A plurality of members are secured to the other one of the uppermost or lowermost cylindrical section of the sifters and longitudinally aligned with a cor-

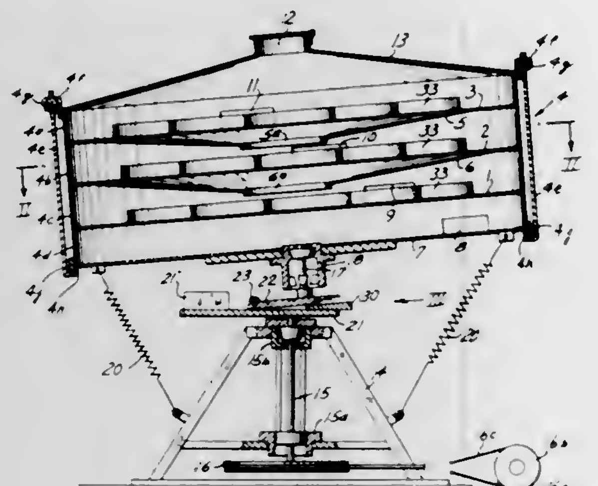

responding one of the plurality of brackets, respectively. An elongated clamping rod is provided extending through each longitudinal opening of each of the plurality of brackets and includes a hook portion adapted to be hooked about the corresponding one of the plurality of members. A nut is releasably secured to each clamping rod adjacent the bracket for securing and tightening the clamping rod thereby clampingly holding the plurality of sifters therebetween.

3,397,782
MATERIAL SEPARATOR
Chao C. Kwong and Raymond L. Kwong, both of 3210 W. 4th Ave., Vancouver, British Columbia, Canada
Filed Jan. 19, 1966, Ser. No. 521,675
7 Claims. (Cl. 209—477)

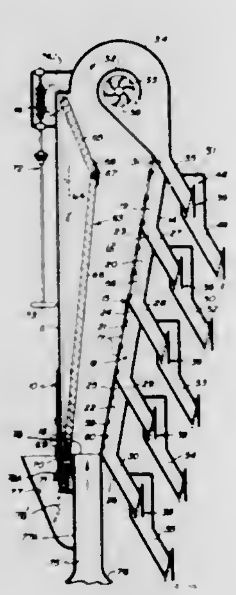

A pneumatic material separator including a generally vertical hollow chamber having an upwardly increasing cross-section in which upwardly flowing air causes material particles to stratify in vertical zones according to their floating characteristics, and means to remove said particles from said zones.

3,397,783
METHOD AND APPARATUS FOR CLEANING HORIZONTAL ROTARY FILTERS OF THE TILTING CELL TYPE
Thomas J. Pearce, Bartow, Fla., assignor to Swift & Company, Chicago, Ill., a corporation of Illinois
Filed Jan. 6, 1966, Ser. No. 519,092
10 Claims. (Cl. 210—77)

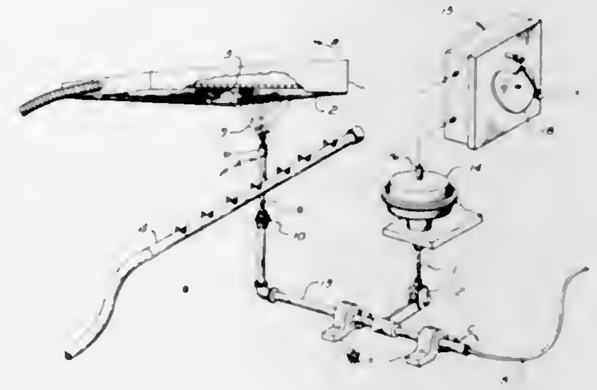

1. The method of discharging filter cake from a horizontally rotating filter cell in which the filter cell surface is inverted for cleaning, and cleaning the filter fabric as well as preventing crystalline growth thereon which involves the steps of washing the filter fabric with a low pressure liquid and contacting the fabric with a high pressure liquid in an oscillating manner whereby the spray from the high pressure nozzle uniformly traverses a path across the inverted surface of the horizontally moving filter cell.

3,397,784
TWIN BASKET STRAINER WITH PRESSURE-RESPONSIVE BACKWASH MEANS
Hugh B. Carr, McMurray, Pa., assignor to S. P. Kinney Engineers, Inc., Carnegie, Pa., a corporation of Pennsylvania
Filed Sept. 15, 1966, Ser. No. 579,640
3 Claims. (Cl. 210—108)

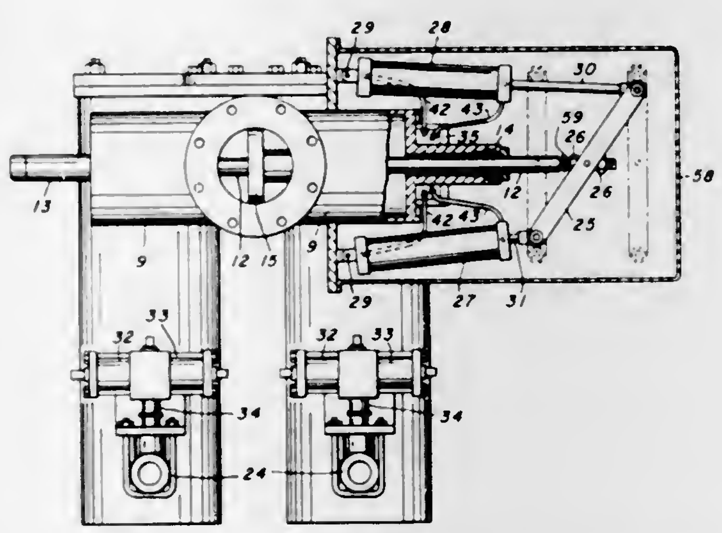

A twin basket strainer having common inlet and outlet ducts with a valve in the inlet duct movable from a position where water is supplied to both strainers to a position where water is shut off from one strainer or the other, each strainer having a pressure-responsive discharge valve so that when its supply is shut off, a backwash of filtered water may flow reversely through the strainer, the inlet duct valve actuating means comprising two pressure-responsive fluid pressure cylinders connected to the valve stem through a lever pivoted to the stem so that each cylinder is effective for moving the valve only half way through its entire distance of travel.

3,397,785
WATER PURIFYING APPARATUS EMPLOYING STACKED ASSEMBLY OF REVERSE OSMOSIS CELLS
Marvin A. Jarvis, Santa Ana, and Jerome F. Stratman, Cypress, Calif., assignors to Aerojet-General Corporation, El Monte, Calif., a corporation of Ohio
Filed July 20, 1965, Ser. No. 473,375
9 Claims. (Cl. 210—125)

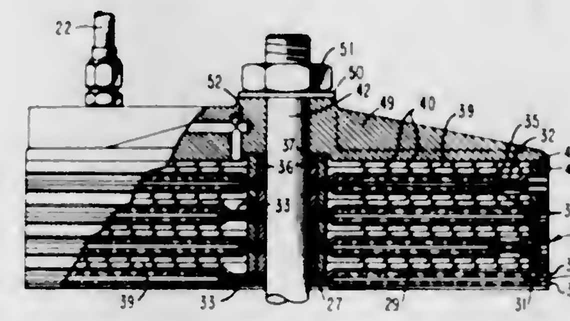

A reverse osmosis, home water purification apparatus comprising a stack of spaced-wall-type purification cells, each cell comprising two semipermeable membranes backed by absorbent layers; the stack being disposed in a purified water chamber and communicating therewith through the absorbent layers; the stack being fed through a float controlled valve with the float disposed in the purified water chamber.

3,397,786
DUAL ELEMENT FILTER ASSEMBLY HAVING PLURAL VALVES THEREIN
William H. Hultgren, Mount Carmel, Ill., assignor to Champion Laboratories, Inc., West Salem, Ill., a corporation of Connecticut
Continuation of application Ser. No. 391,495, Aug. 24, 1964. This application July 17, 1967, Ser. No. 654,003
1 Claim. (Cl. 210—132)

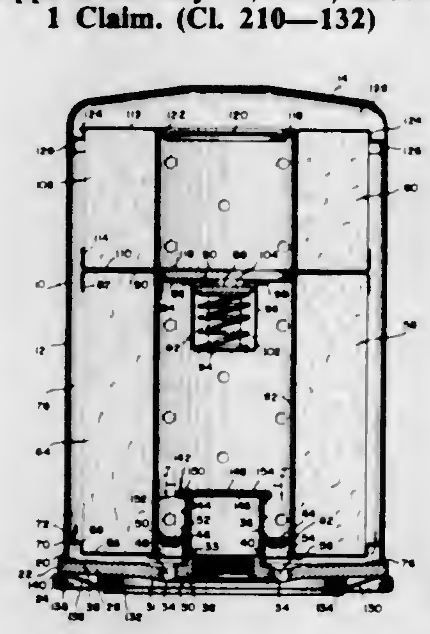

A spin-on type filter assembly comprising dual, annular, stacked filter elements, an open ended housing closed off by a bottom member, dual by-pass valves, and a check valve, and having the outer periphery of the lowest end cap locked between the bottom member and an outwardly extending portion of the housing and the outer periphery of the highest end cap extending to the housing wall to position the filter elements in the housing.

3,397,787
HORIZONTAL TABLE TYPE FILTER ELEMENTS WITH TIMING MEANS
Iti Mini, Milan, Italy, assignor to Montecatini Edison S.p.A., Milan, Italy, a corporation of Italy
Continuation-in-part of application Ser. No. 466,211, June 23, 1965. This application May 16, 1967, Ser. No. 642,643
Claims priority, application Italy, June 30, 1964, 14,261/64
11 Claims. (Cl. 210—139)

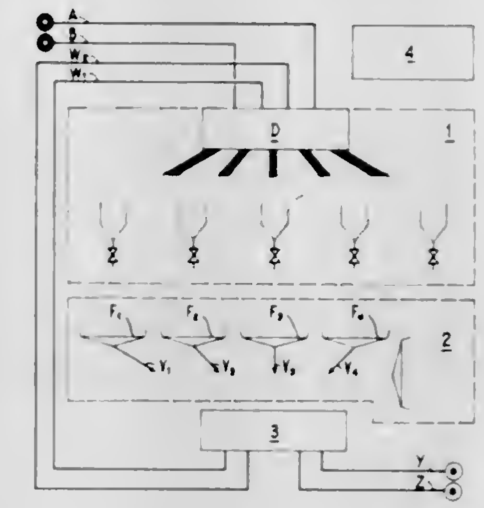

A filter assembly having multiple, horizontal, vacuum operated, table type filter elements and having a feeder distributor stage which supplies slurry and n different washings to $n+1$ filter elements while another filter element remains unfed and is overturned to discharge residue, and having a collector stage which collects each filtrate separately in $n+1$ vessels, and timing means to operate the filter assembly continuously, each filter element receiving the different fluids and being overturned in sequence one step ahead of or behind of another element.

3,397,788
WATER TREATING APPARATUS
Joseph H. Duff, Basking Ridge, and Alfonse J. Soriente, Gillette, N.J., assignors to Union Tank Car Company, Chicago, Ill., a corporation of New Jersey
Filed Oct. 21, 1965, Ser. No. 499,756
7 Claims. (Cl. 210—195)

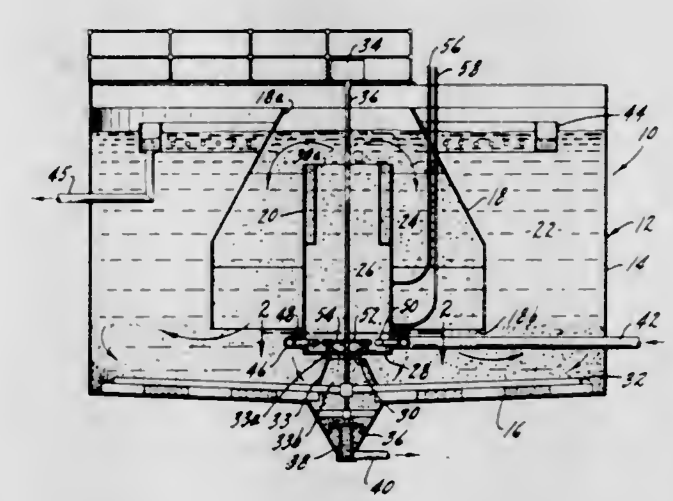

In a water treatment apparatus having a settling zone, a mixing and recirculation zone and an uptake zone, the influent water and chemical treating agents are directed into the uptake zone, mixed with recirculating precipitates and hydraulically pumped upwardly to the mixing and re-

circulation zone. The bottom member of the uptake zone has an opening therein through which the recirculating precipitates are drawn from the settling zone.

3,397,789
SEWAGE TREATMENT SYSTEM
Joe M. Valdespino, Orlando, Fla., assignor to Pacific Flush Tank Company, Chicago, Ill., a corporation of Illinois
Continuation of application Ser. No. 322,295, Nov. 8, 1963. This application Oct. 20, 1966, Ser. No. 588,220
7 Claims. (Cl. 210—201)

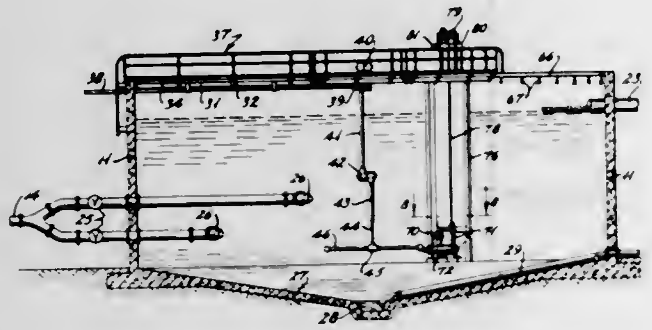

A sewage treatment system includes a plurality of serially connected treating tanks with the first tank providing grit and floatable separation, the second tank providing aeration of the sewage, and a third tank providing an activated sludge digester with feedback of a portion of the sludge from the digester to the second tank with no feedback being provided to the first tank.

3,397,790
SEMIPERMEABLE MEMBRANE SEPARATION DEVICES AND METHODS OF MAKING THE SAME
Glen A. Newby, Del Mar, and Anthony J. Navoy, San Diego, Calif., assignors, by mesne assignments, to Gulf General Atomic Incorporated, San Diego, Calif., a corporation of Delaware
Filed Feb. 25, 1966, Ser. No. 529,993
25 Claims. (Cl. 210—321)

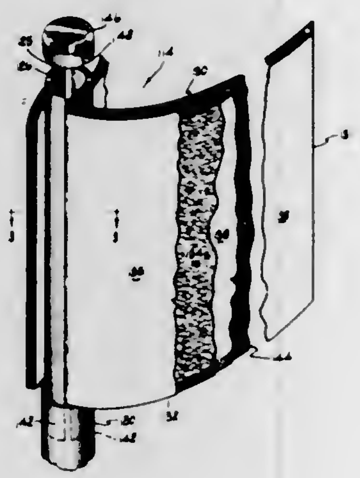

Semipermeable membrane separation devices particularly designed for production line manufacture. Devices which employ sheets of separator material, semipermeable membranes, and backing material spirally wound about a central mandrel are disclosed wherein the backing material sheet or a sandwich of backing material between sheets of semipermeable membrane extends through the mandrel, which may be formed by a plurality of segments connected together to form a tube. Mandrels may be made of a plurality of individual tubes each of which has its own axial passageway. Alternately, a mandrel is provided with peripheral teardrop shaped cavities, into each of which is fitted a similarly shaped insert that is a part of a subassembly including semipermeable membrane and backing material. Disclosed are methods suitable for production line formation of membrane modules of this general type utilizing such laminates.

3,397,791
DIALYZER CLAMPING MEANS
Carl V. Johnson, Baldwin, N.Y., assignor to Technicon Corporation, a corporation of New York
Filed Jan. 23, 1967, Ser. No. 610,875
7 Claims. (Cl. 210—321)

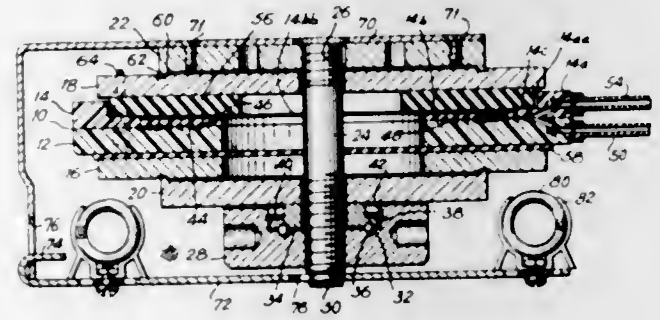

A dialyzer having a pair of plates forming a flat helical, dialysis chamber, one of these plates being relatively rigid and the other of these plates being relatively flexible, and a series of clamping plates and gasket for providing pressure on the dialysis chamber plates which is uneven taken along a radius across the plates, the greatest pressure being provided over the outermost turn of the helical chamber.

3,397,792
APPARATUS FOR THE APPLICATION OF CENTRIFUGAL FORCE
John J. Serrell, Coopertown Road, Haverford, Pa. 19041
Continuation-in-part of application Ser. No. 464,293, June 16, 1965. This application Mar. 4, 1966, Ser. No. 531,819
5 Claims. (Cl. 210—370)

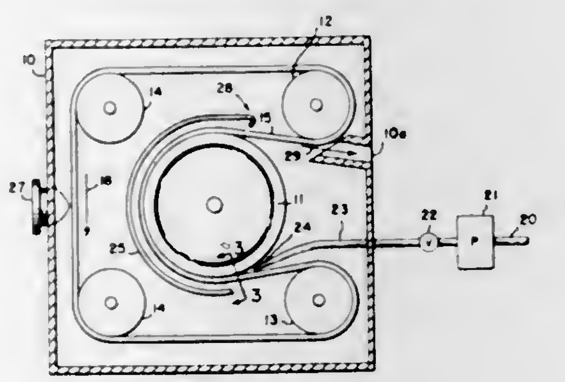

Apparatus for centrifuging material. The apparatus includes an endless belt which is supported by and driven through a path defined by a separating pulley in engagement with the outside surface of the endless belt and at least two additional pulleys in engagement with the inside surface of the belt which maintain the belt in engagement with the separating pulley, such that the material to be separated can be fed onto the outside of the belt for passage around the separating pulley and then discharged away from the confines of the belt as the belt's curvature changes as it passes one of the additional pulleys.

The method includes feeding material to be treated to the centrifuge such that the material may be spread thereon in a mono-particulate layer.

3,397,793
PLEATED FILTER
Robert W. MacDonnell, Crete, Ill., assignor to Allied Filter Engineering, Inc., a corporation of Illinois
Filed Apr. 15, 1965, Ser. No. 448,427
14 Claims. (Cl. 210—457)

A resin impregnated pleated paper filter element having an annular array of normally stable, generally radial pleats each being resiliently flexible in a circumferential direction, a netting of cotton fiber circumferentially encircling the pleats in substantially extended relation, and adhesive securing the netting to the pleats to connect the pleats in selectively collapsible ganged relationship to enable any particular pleat to collapse and to provide concurrent circumferential flexing of a plurality of successively adjacent ganged pleats whereby these successively adjacent ganged pleats resiliently return to normal position to restore the collapsed pleat.

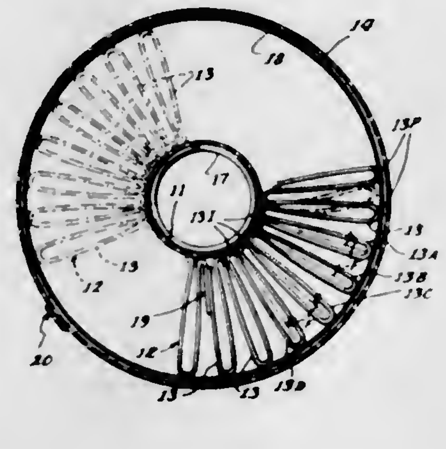

3,397,794
FILTER ELEMENT
Louis R. Toth, Montrose, and Orville F. Keller, Reseda, Calif., assignors to California Institute Research Foundation, Pasadena, Calif., a corporation of California
Continuation of application Ser. No. 472,937, July 19, 1965. This application Feb. 8, 1968, Ser. No. 704,182
4 Claims. (Cl. 210—488)

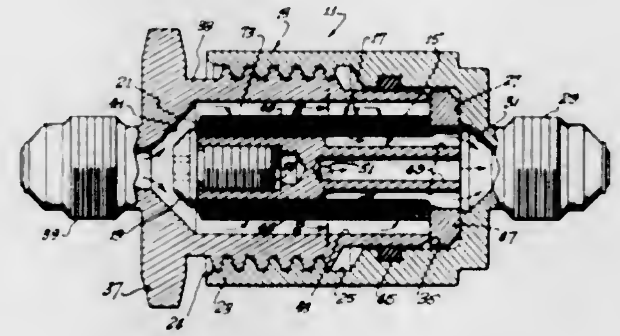

A filter for removing particulate impurities from a fluid by inertial separation, comprising a stack of annular filter elements each having inner and outer walls respectively provided with interleaved radial baffles causing fluid to follow a serpentine path in flowing from inlet openings in one of the walls to outlet openings in the other. The ends of the baffles are enlarged to form restrictions serving to locally increase the fluid velocity and thus the inertial forces to which impurities in the fluid are subjected. The filter elements are stacked on a hexagonal core making only line contact therewith to provide between the core and the filter elements longitudinal flow channels for the fluid being filtered. With this construction, the openings in the inner walls of the filter elements communicate with such flow channels irrespective of the angular positions of the filter elements on the core.

3,397,795
MEANS FOR DISPLAYING GOLF CLUBS
Thomas H. Elting, 3024 Sandage, Fort Worth, Tex. 76109
Filed Aug. 22, 1966, Ser. No. 574,159
3 Claims. (Cl. 211—60)

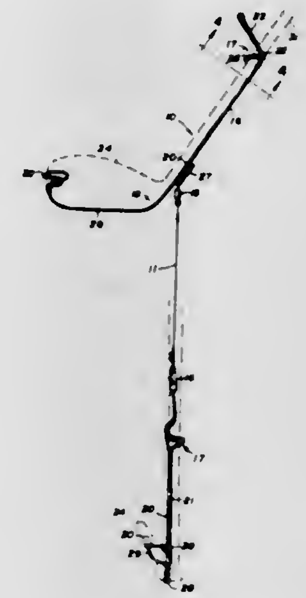

A mobile display for golf clubs comprising a multiple of club head and shaft engaging holders suspended one above the other and whereby the display clubs will turn in the presence of the air currents.

3,397,796
SUPPORTING STRUCTURE AND BLANKS THEREFOR
Richard M. Watts, Henrico County, Va., assignor to Reynolds Metals Company, Richmond, Va., a corporation of Delaware
Filed Oct. 6, 1965, Ser. No. 493,407
7 Claims. (Cl. 211—73)

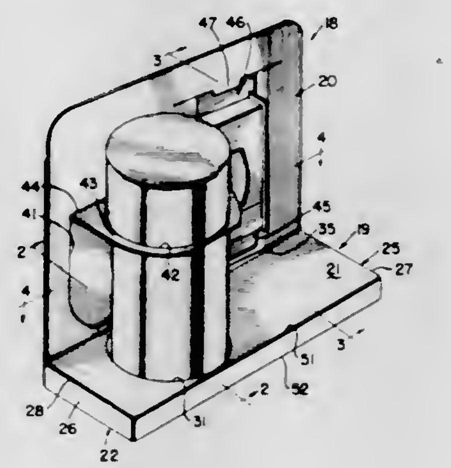

Article supporting structures, such as display stands, are formed from a single sheet of material. The sheet is provided with scores and cut-out areas so as to produce a substantially L-shaped structure when the sheet is folded and arranged in erected form. A horizontal base portion is adapted to receive the bottom of a cylindrical article, and a vertical portion, formed from overlaid end portions of the sheet, provides a ring-like extension for receiving and steadying an upper portion of the article. The two-layer vertical portion of the structure is provided with a vertical slot in one layer, and is adapted to receive and hold peripheral portions of a second article.

3,397,797
CURTAIN SUSPENDING MECHANISM
Albert Ropas, Triesterstrasse 82, Graz, Steiermark, Austria
Filed Apr. 25, 1966, Ser. No. 545,129
Claims priority, application Austria, Apr. 26, 1965, A 3,782/65
7 Claims. (Cl. 211—103)

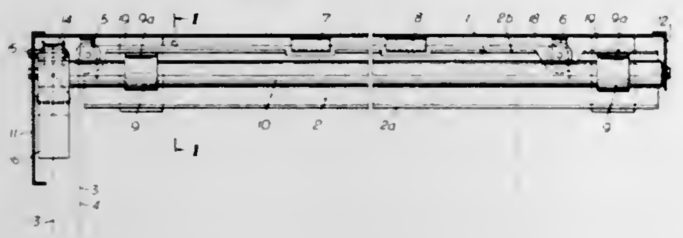

A curtain suspending mechanism according to which a curtain rod can be raised and lowered. The curtain rod has a flat web which engages an abutment means when the curtain rod is in its upper position. A rotary wedge means presses the web of the curtain rod against the abutment means to hold the curtain rod in its upper position. This rotary wedge means has an outer tip which is movable along a path which at its nearest point to the abutment means is situated from the latter by a distance less than the thickness of the web so that the tip of the wedge means can press the web of the curtain rod against the abutment means. A weight urges the tip of the wedge means against the web of the curtain rod and a manually operable means acts on the weight to turn the rotary wedge means in opposition to the force of the weight so as to release the curtain rod for downward movement when desired.

3,397,798
COUPLER DEVICE
Robert L. Carlson, Chicago, Ill., assignor to W. H. Miner Inc., Chicago, Ill., a corporation of Delaware
Filed Feb. 23, 1966, Ser. No. 529,570
5 Claims. (Cl. 213—22)

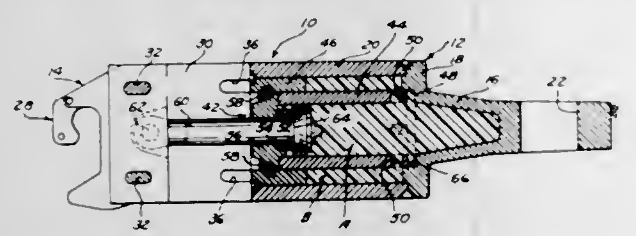

A two-part railway car coupler for dissipating a portion of the buff force applied thereto with the two parts being normally biased apart by a damped spring in the form of a piston and cylinder unit wherein the cylinder is filled with a compressible solid material and with connecting means between the two parts permitting relative longitudinal movement therebetween while preventing relative rotation therebetween.

3,397,799
WORK TRANSFER MECHANISM
Bernard J. Wallis, % Livernois Engineering Co., 25200 Trowbridge Ave., Dearborn, Mich. 48124
Filed Oct. 6, 1966, Ser. No. 584,895
23 Claims. (Cl. 214—1)

1. In a work transfer device for a press having a reciprocating ram, said device being of the type driven by the ram and having a carriage mounted for reciprocation in a rectilinear path and a work gripping element mounted on the carriage for bodily movement therewith and for reciprocation on the carriage in a direction generally transverse to the path of travel of the carriage such that when the carriage is adjacent one end of its stroke, the work gripping element is adapted to be projected into engagement with a workpiece, whereupon the carriage is adapted to be actuated to advance the workpiece in the direction of carriage travel, the work gripping element being adapted to be retracted out of engagement with the workpiece adjacent the opposite end of the carriage stroke to enable the carriage to be returned to its starting position, that improvement which comprises drive means, means for operably connecting said drive means with the ram of a press, means for supporting said drive means for axial reciprocation in a rotatably fixed position, driven

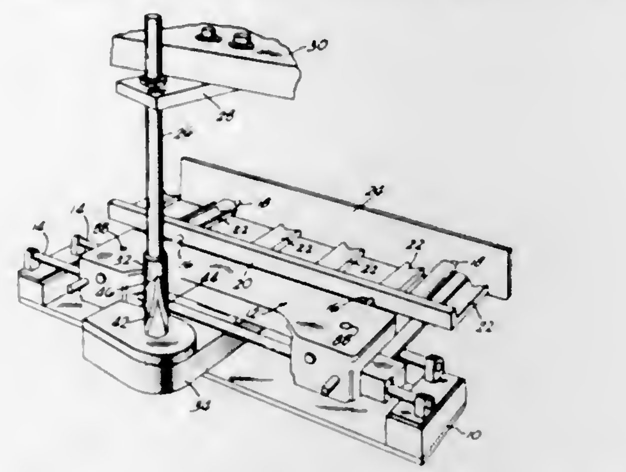

means, means for supporting said driven means for rotation in an axially fixed position, spiral cam groove means on one of said drive and driven means and cam follower means on the other of said drive and driven means interengaged with said spiral cam groove means and interconnecting the drive and driven means such that the driven means are rotated in one direction in response to axial reciprocation of the drive means in opposite directions and means connecting said driven means with said carriage and said work gripping element to actuate said carriage and work gripping element in the above described sequence in response to axial reciprocation of the drive means.

3,397,800
CONVEYOR MEMORY SYSTEM
Herbert S. Shaw, deceased, late of Whittier, Calif., by Sophie L. Shaw, administratrix, 5208 Rideout Way, Whittier, Calif. 90601
Filed May 27, 1966, Ser. No. 553,576
6 Claims. (Cl. 214—11)

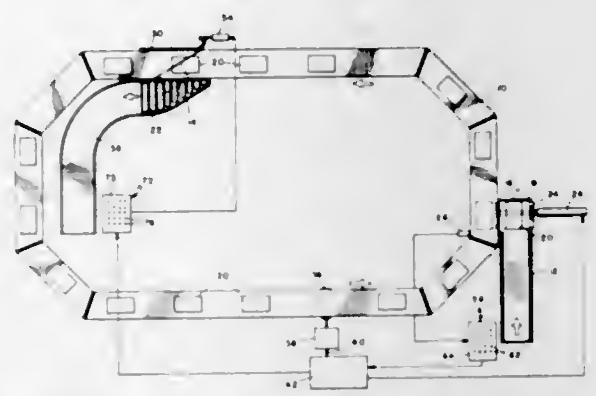

An endless conveyor is coupled to a memory system having an endless recording element which is proportional in length to and moves in synchronization with the conveyor. Each article placed on the conveyor is identified by a predetermined code which is applied by a coding unit to the recording element in a position corresponding proportionally to the position of the article on the conveyor, so that the relative positions of each article and its identifying code remain in synchronization. To retrieve any article or group of similarly coded articles at any of a number of retrieval stations, the pertinent code is manually applied to a decoding unit and, when the selected article reaches the retrieval station, the coded signal carried by the recording element will actuate ejection means to remove the article from the conveyor.

3,397,801
VALVE SEALS FOR DRY SOLID PUMPS
Thomas G. Day, South Charleston, W. Va., assignor to Union Carbide Corporation, a corporation of New York
Filed Nov. 7, 1966, Ser. No. 592,461
3 Claims. (Cl. 214—17)

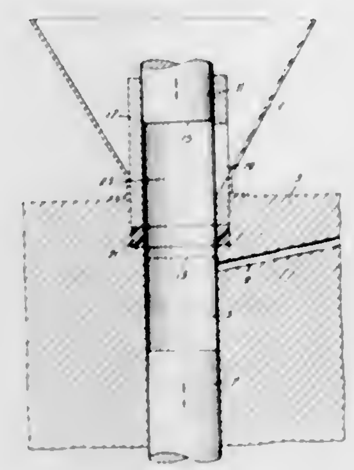

1. A sealing arrangement for providing a seal between two zones which comprises, in combination, a storage means for solid particles constituting the first zone suitably mounted on a housing having a passage means therethrough which passage means constitutes a second zone, a reciprocating member within said passage means adapted to move therethrough along its principal axis, a discharge port means extending laterally from said passage means above said reciprocating member, a cylindrical body extending centrally through said solid storage means, said cylindrical body having an upper end and a lower end, said upper end being connected to a means for vertical biasing the motion of said cylindrical body between a first position and a second position, said first position corresponding to the end of the upstroke motion and said second position corresponding to the end of the downstroke motion of said cylindrical body, a sleeve member coaxially surrounding said cylindrical body, said sleeve member having an opening adapted to permit the passage of solid particles from said storage means into said passage means when said cylindrical body is at said first position, a sealing element encircling the lower end of said cylindrical body and adapted to be compressed between said cylindrical body and said housing when said cylindrical body is in the second position.

3,397,802
ARTICLE CONVEYOR SYSTEM
Lloyd M. Hinchee, R.F.D. 2, Roanoke, Va. 24019
Filed Aug. 11, 1965, Ser. No. 478,925
4 Claims. (Cl. 214—38)

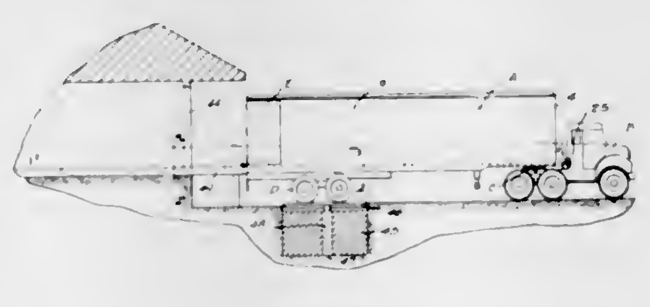

The present application is concerned with a means for moving articles on to and from trucks into and from a warehouse and employs a V-shaped rail having a V-shaped slide longitudinally slideable thereon and which rails and slides are fixedly mounted on the articles to be moved, the truck and embedded in the warehouse floor whereby the articles can be slid from one position to another.

3,397,803
EASY OPENING CLOSURE FOR TAPERED CONTAINERS
Roger W. Melton, Waukegan, Ill., assignor to Continental Can Company, Inc., New York, N.Y., a corporation of New York
Filed Mar. 18, 1966, Ser. No. 535,445
19 Claims. (Cl. 215—95)

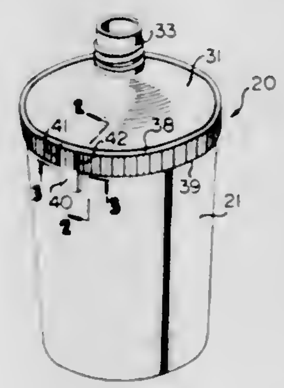

A container having an upwardly flaring upper rim has a closure overlying the rim. A retaining ring is telescoped upwardly over the container into wedging engagement with the rim. The ring is secured to the closure by means which may be ruptured to enable removal of the closure from the container.

3,397,804
CONTAINER HAVING A PLURALITY OF POCKETS AFFIXED THERETO
Harvey J. Davis, 10249 N. Delaware St., Indianapolis, Ind. 46280
Filed Aug. 22, 1966, Ser. No. 574,022
3 Claims. (Cl. 220—20)

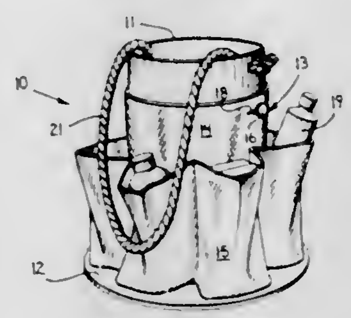

A container for transporting toilet articles and the like having a cup-shaped member, a bail and a plurality of pockets disposed about the cup-shaped member.

3,397,805
ROTARY TIERED CANISTER SET
Peter M. Berend, Wooster, Ohio, assignor to Rubbermaid Incorporated, Wooster, Ohio, a corporation of Ohio
Filed Mar. 13, 1967, Ser. No. 622,758
8 Claims. (Cl. 220—23.86)

Apparatus comprising mating containers removably

carried on a lower platform which is rotatably supported on a base, an upper platform supported on said lower

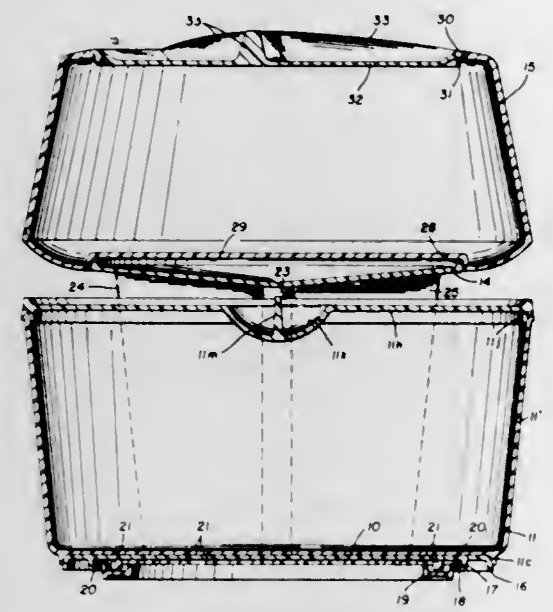

platform, and an upper container removably supported on said upper platform.

3,397,806

FOAMED PLASTIC CONTAINER WITH HINGED CLOSURE

John P. Glass, 718 Lorraine Ave., Ardmore, Pa. 19003

Filed Oct. 6, 1964, Ser. No. 401,893

1 Claim. (Cl. 220—32)

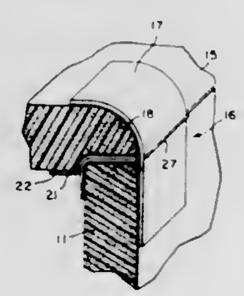

1. A plastic foam container comprising a body having a bottom with sidewalls extending upwardly therefrom to form an opening, a lid resting upon the top of the sidewalls with the outer edge of the lid being in substantially vertical alignment with the outer edge of the sidewalls, and a hinge joining the lid to one of the sidewalls, said hinge including a first flexible tape having adhesive on one surface, a second flexible tape having adhesive on one surface, a seam of thread connecting the tapes together at their mid-section to form upper and lower tape sections, said adhesive surfaces of the tapes facing each other, the adhesive surface of the upper section of the first tape extending from the outer edge of the lid inwardly along the bottom of the lid, the adhesive surface of the lower section of the first tape extending from the outer edge of said one sidewall across the top of the sidewall and downwardly along the inside of the sidewall, the adhesive surface of the upper section of the second tape extending from the outer edge of the lid at least partially across the top of the lid, and the adhesive surface of the lower section of the second tape extending from the outer edge of the lid downwardly along the outside of the sidewall.

3,397,807

RECLOSABLE CAN

William Edward Taylor, Easton, Md., assignor to American Can Company, New York, N.Y., a corporation of New Jersey

Filed July 17, 1967, Ser. No. 653,882

5 Claims. (Cl. 220—42)

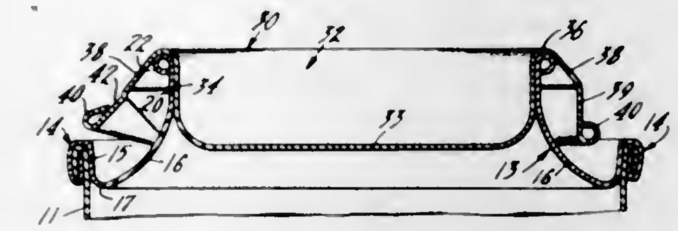

A reclosable can of the type having an annular upwardly extending throat and a plug with an annular wall to engage the inner surface of the ring, has a plurality of lugs on the plug which engage the top of the double seam to prevent collapse of the throat due to over-assembly or an axial force applied to the lid during shipment or storage or by a shaking apparatus.

3,397,808

LEVEL INDICATING TANK CLOSURE

Myrton N. Jones, Flint, Mich., assignor to General Motors Corporation, Detroit, Mich., a corporation of Deleware

Filed Sept. 29, 1965, Ser. No. 491,356

2 Claims. (Cl. 220—44)

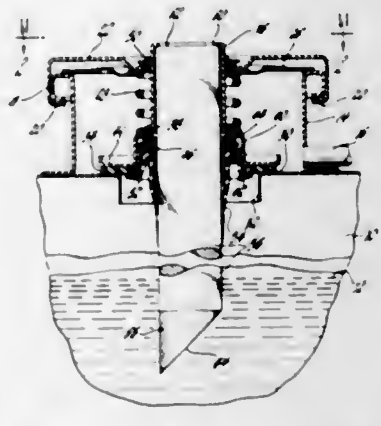

A removable automobile radiator cap having a light transmitting element extending through the cap so that a requisite level of engine coolant will contact the lower end of the element and that contact or lack of contact will be apparent.

3,397,809

COMPOSITE CAN WITH EASY OPENING SCORED CAN OPENER END

Donald H. Ellerbrock, 1605 Gallant Fox Drive, Florissant, Mo. 63033

Filed Aug. 26, 1966, Ser. No. 575,431

5 Claims. (Cl. 220—48)

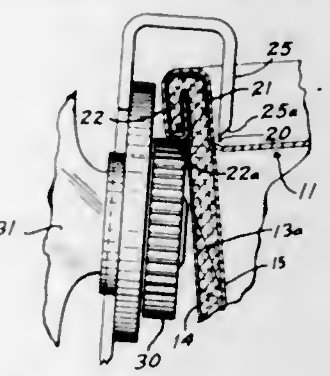

This disclosure relates to a metal end particularly designed for use with a composite can to facilitate opening of the can with any of the various conventional can openers presently on the market and also relates to a composite can embodying such an end. The specific disclosure relates to the positioning of a circumferential score line which will materially decrease the resistance to travel of the cutter element of a can opener of the type having a toothed driving wheel to prevent slippage of the driving wheel during the operation of the can opener.

3,397,810

CONTAINER WITH TAPE OPENING DEVICE

Stanley Edward Rohowetz, Barrington, Ill., assignor to American Can Company, New York, N.Y., a corporation of New Jersey

Filed Mar. 28, 1966, Ser. No. 538,020

10 Claims. (Cl. 220—53)

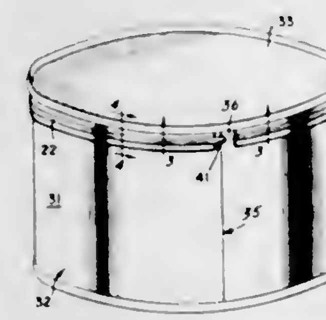

A container in which the entire end may be hinged upwardly without the use of a tool or implement and yet is strong enough to withstand internal pressures created when the product is heat processed. A slit close to the end seam and extending less than 360° around the side wall of the container is covered with a laminated tape closure having an inner tape adhered along the marginal side portions thereof to the side wall, and a narrower outer tape which is adhered to the inner tape so that when a tab on the end of the outer tape is pulled outwardly, the outer tape and the portion of the inner tape between its adhered marginal side portions are pulled free of the container to permit the lid to be hinged upwardly about the portion of the side walls between the ends of the slit.

3,397,811

TEAR-OUT CAN END WITH ORGANIC INNER SEAL MEMBER

Benjamin B. Lipske, Downers Grove, Ill., assignor to National Can Corporation, Chicago, Ill., a corporation of Delaware

Filed Apr. 17, 1967, Ser. No. 631,254

13 Claims. (Cl. 220—54)

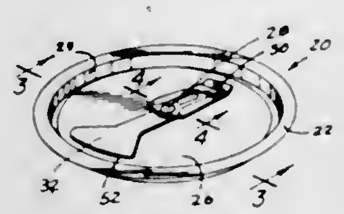

An easy opening can end in which a scored tear-out area is joined to a finger tab by means of a rivet which is integrally formed from the material comprising the can end, wherein the scored area is surrounded by a continuous, upwardly extending ridge, and wherein an area inside the ridge is covered with an organic plastic seal member which covers the entire area defined by the score line, including the portion of the end from which the rivet is formed. In the preferred embodiment, the score line is on the inside of the end, which is made from steel, and the entire tear-out area is in a plane slightly raised from the plane of the remainder of the end. A method is described for forming the ridges, metering a given amount of plastisol or like material in to the area, achieving gelation of the seal member, and further curing it if necessary, leaving an end with a smooth interior surface sealed against cracks or imperfections created by scoring and riveting during the manufacturing process.

3,397,812

EASY-OPEN CONTAINER END WITH REINFORCING BEAD

Raymond Luscombe Batchelar, Westwood, N.J., assignor to American Can Company, New York, N.Y., a corporation of New Jersey

Filed June 26, 1967, Ser. No. 648,649

5 Claims. (Cl. 220—54)

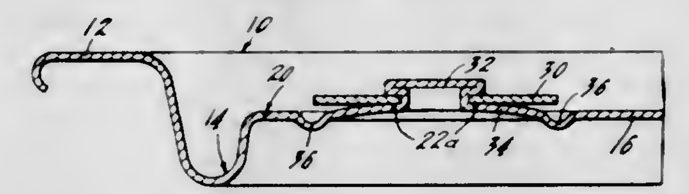

In a container end closure or other component having a scored tear-out section with a drawn, integral rivet securing a lifting lever to said section, a bead in the end closure is disposed in such encircling proximity to the rivet as to stiffen the unstable metal of the end closure about the rivet to preclude inadvertent reverse flexing of such metal, thereby rendering a score line adjacent said rivet abuse-resistant.

3,397,813

DUMPING CONSTRUCTION

William S. Kelly, Richland, and Fred M. Weidling, Kirkland, Wash., and Richard A. Hemphill, Los Alamos, N. Mex., assignors to the United States of America as represented by the United States Atomic Energy Commission

Filed Dec. 16, 1966, Ser. No. 602,423

3 Claims. (Cl. 220—55)

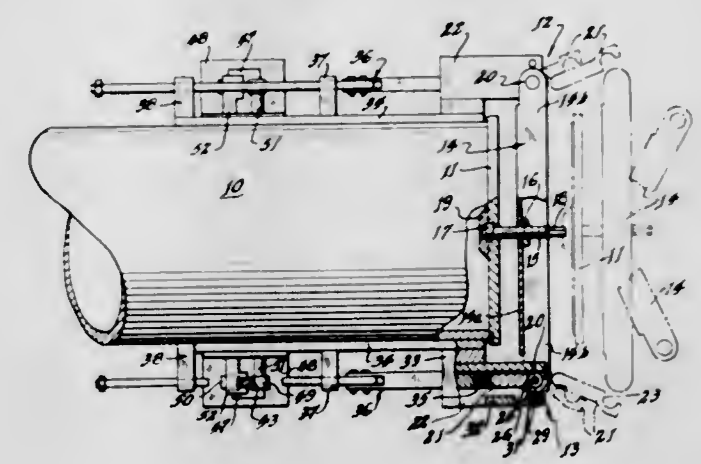

Dumping door through which fluid may be dumped from a vessel. The dumping door is held closed against the vessel by two diametrally opposed breakaway hinges both of which will normally be released on signal to disconnect door from vessel for dumping of fluid. However, it is sufficient for dumping that only one of the two hinges be released. An element of safety is provided in that it is more probable that one of two hinges will be released than that both hinges will be released.

3,397,814
COMPOSITE LID
Eli A. Zackheim, North Princeton, N.J., assignor to Johnson & Johnson, a corporation of New Jersey
Filed Dec. 6, 1966, Ser. No. 599,436
6 Claims. (Cl. 220—60)

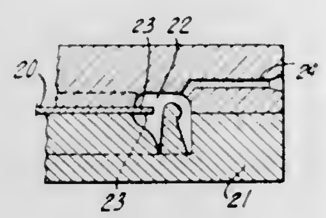

A composite container lid of paneling material (preferably fibrous paper board) and plastic material for closing an opening defined by a vertical wall of the container, is injection molded with a central paneling area and an outer plastic rim presenting a depending flange adapted to engage a surface of such vertical wall. A bonded connection between an outer marginal area of the paneling and an inner overlapping marginal area of the plastic material causes the greater dimensional stability of the paneling material to control the shape of the plastic rim by opposing shrinkage in the plastic as it cools after moulding.

3,397,815
SEALED STORAGE BATTERY CELL
John R. Tench, Pittsburgh, and Leslie A. Doggrell, Pitcairn, Pa., assignors to Westinghouse Electric Corporation, Pittsburgh, Pa., a corporation of Pennsylvania
Filed Dec. 21, 1966, Ser. No. 603,479
2 Claims. (Cl. 220—67)

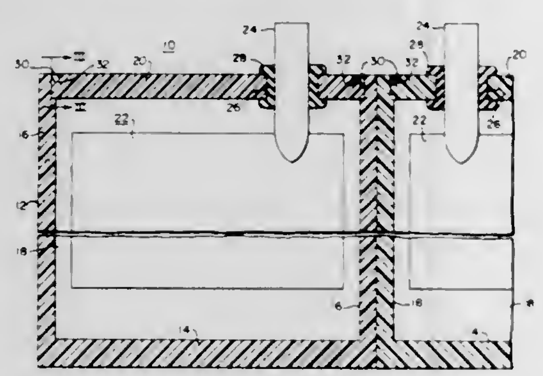

A sealed storage battery cell comprising a casing forming a battery cell having an open end and a cover for the open end which cover is thermally fused to the casing by a heat weldable thermoplastic strip between the casing and cover.

3,397,816
CAN HAVING SEAMS ADHESIVELY BONDED BY THE REACTION PRODUCT OF ALKYLENE DIAMINE, ALKANOL AMINE, DICARBOXYLIC ACID, AND POLYMERIC FAT ACID
Richard J. Ess, Minneapolis, and Don E. Floyd, Robbinsdale, Minn., assignors to General Mills, Inc., a corporation of Delaware
Filed July 18, 1963, Ser. No. 296,048
12 Claims. (Cl. 220—81)

1. A metallic container having seams, said seams being bonded by a polyesteramide-polyamide composition having improved peel strength, said composition comprising the condensation product at temperatures in the range of 150–300° C. of a mixture of (A) a diamine of the formula

$$H_2N—R'—NH_2$$

where R' is an aliphatic hydrocarbon radical of from 2 to 20 carbon atoms and (B) is hydroxyamine of the formula

$$H_2N—R'''—OH$$

where R''' is a divalent aliphatic hydrocarbon radical having from 2 to 8 carbon atoms with a mixture of (C) a dicarboxylic compound of the formula

$$R''OOC—R—COOR''$$

where R is a divalent hydrocarbon radical of from 2 to 20 carbon atoms and R'' is selected from the group consisting of hydrogen and aliphatic hydrocarbon radicals having from 1 to 8 carbon atoms and (D) polymeric fat acids having a dimeric fat acids content of greater than 80% by weight and a trimeric to monomeric fat acids ratio substantially within the area ABCD defined in the drawing, the sum of the molar equivalents of amine and hydroxy groups employed being essentially equal to the molar equivalents of carboxylic groups employed, the molar equivalent ratio of said polymeric fat acids to said dicarboxylic compound being in the range of from 1:0.05 to 1:0.5 and the molar equivalent ratio of said diamine to said hydroxy amine being in the range of from 20.0 to 0.5.

3,397,817
DISPENSING APPARATUS WITH HEATING CHAMBER
Peter Harold Smith, Maidenhead, England, assignor to Microtherm Limited
Filed Jan. 6, 1967, Ser. No. 607,714
Claims priority, application Great Britain, Jan. 10, 1966, 1,030/66
8 Claims. (Cl. 221—150)

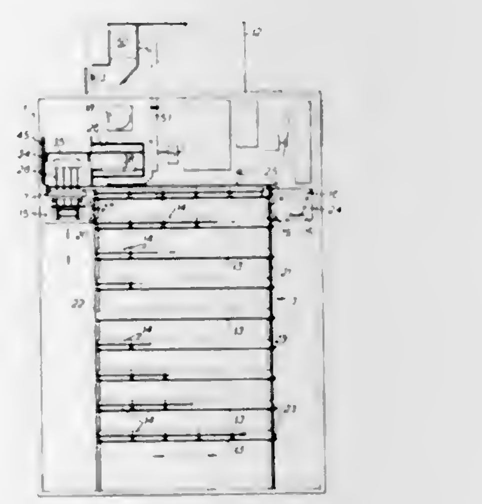

The exemplary vending apparatus described dispenses a variety of heated articles. The articles are transferred from a storage section to a first position on respective carriages, and removed from the carriages at said first position for heating in a microwave cavity. The transfer mechanism is reversible to reject the selected article.

3,397,818
PACKAGE FOR SMALL SLAB-LIKE ARTICLES
Daniel Rey, Chemin des Trois-Rois 5 bis, Lausanne, Vaud, Switzerland
Filed Nov. 17, 1966, Ser. No. 595,169
Claims priority, application Switzerland, Apr. 25, 1966, 5,985/66
10 Claims. (Cl. 221—232)

A package for containing small slab-like articles, such as chewing-gum, etc. formed of an enclosure having an upper wall, side walls and a bottom wall. One of the side walls includes a slot for extracting the articles. A spring-blade is secured to the bottom wall and loops inwardly towards the upper wall to progressively urge the

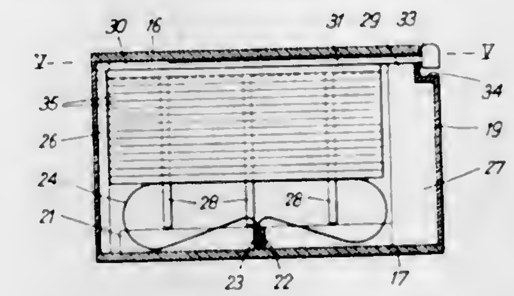

packaged articles towards the upper wall. The upper wall includes an elongated opening or a curved resilient arm to engage the top one of the articles for extracting or dispensing of the articles.

3,397,819
GAS REPLENISHMENT DEVICE
Robert B. Hodge, Malibu, Calif., assignor to Hughes Aircraft Company, Culver City, Calif., a corporation of Delaware
Filed July 19, 1967, Ser. No. 654,626
13 Claims. (Cl. 222—3)

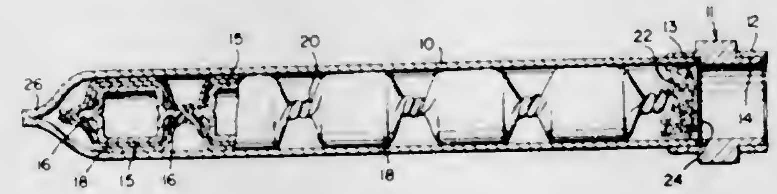

In the disclosed device for supplying replenishing gas to a gas laser, a plurality of glass capsules containing the laser gas at a pressure substantially greater than the laser gas pressure are disposed in a housing of ductile material which is hermetically sealed to the laser in gas communicating relationship. Rupture of a capsule by the application of force to the housing at a region adjacent the capsule releases the pressurized gas into the laser.

3,397,820
CONTAINER WITH POP-UP SPOUT
Daniel L. Smith, Fort Myers, Fla., assignor to Daniel L. Smith, trustee, Fort Myers, Fla.
Filed Mar. 9, 1966, Ser. No. 532,999
3 Claims. (Cl. 222—83)

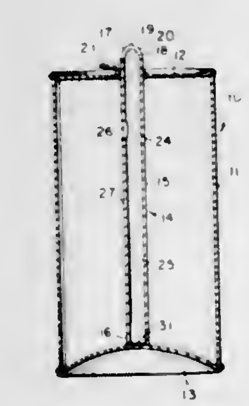

A container for fluent material comprising a can having an end wall which is alternatively convex and concave and movable, with a snap-action, from its convex condition to its concave condition when pressure is applied thereto. A spout member is drivingly engaged with the movable end wall and adapted to pierce the opposite end wall when the movable end wall is moved from its convex condition to its concave condition.

3,397,821
COLLAPSIBLE TUBE WITH PLASTIC OUTSERT
Robert D. Tiberiis, Newport, Ark., assignor to Victor Metal Products Corp., Newport, Ark., a corporation of Delaware
Filed July 7, 1966, Ser. No. 563,602
1 Claim. (Cl. 222—92)

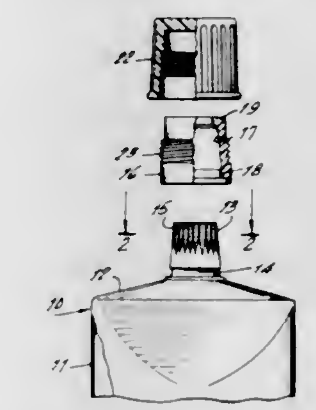

A metal collapsible tube is provided with a plastic outsert at the dispensing end thereof. The outsert is externally threaded to receive a closure cap and internally formed with a frusto-conical bore, which is received upon a frusto-conical neck portion on the metal tube. The neck portion is undercut at the base thereof, and the outsert provided with an annular bead which snaps into the undercut as the outsert is forced onto the metal neck. A plurality of teeth formed in the metal neck invade the soft material of the outsert as it is forced upon the tube end thereby providing a fluid tight seal and preventing the two members from rotating with respect to each other. The outsert is stretched as it is forced onto the neck portion of the tube.

3,397,822
PRESSURIZED CONTAINER CAP CONSTRUCTION
Wallace W. Peters, Sayreville, N.J., assignor to Colgate-Palmolive Company, New York, N.Y., a corporation of Delaware
Filed Aug. 25, 1965, Ser. No. 482,369
3 Claims. (Cl. 222—402.13)

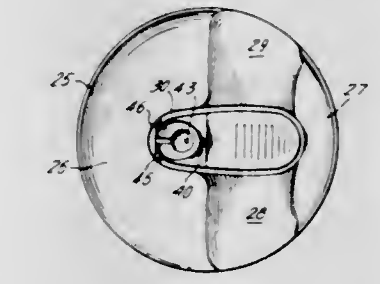

1. A finger-operable actuator cap assembly for a pressurized container, said actuator cap assembly having a front, a back and two sides, and comprising a hollow downwardly open body having a top wal portion with a central aperture therein and front and rear top wall segments, said front, back and two sides forming a substantially cylindrical sidewall portion having an upper edge integral with said top wall portion and a lower edge in contact with said pressurized container, a valve actuating means mounted within said aperture, said valve actuating means including a conduit positioned to receive product from said valve as it is dispensed and to direct the product being dispensed from said pressurized container towards the front and upwardly of said actuator cap assembly, said top wall portion being shaped to form a pair of complementary symmetrical depressions extending transversely outwardly on each side of said valve actuating

means, said symmetrical depressions being of a size to readily fully receive and position a finger of the user from either side of the cap assembly and the top of said valve actuating means being positioned horizontally below said upper edge of said substantially cylindrical sidewall and horizontally above the bottom of the symmetrical depressions whereby the user can apply slight pressure with the ball of said finger to operate the valve actuator means.

3,397,823
CONTAINER AND DISPENSING CLOSURE THEREFOR
Wylie C. Kirkpatrick, Moreland Hills, Ohio, assignor to The Glidden Company, Cleveland, Ohio, a corporation of Ohio
Filed Aug. 2, 1965, Ser. No. 476,233
9 Claims. (Cl. 222—480)

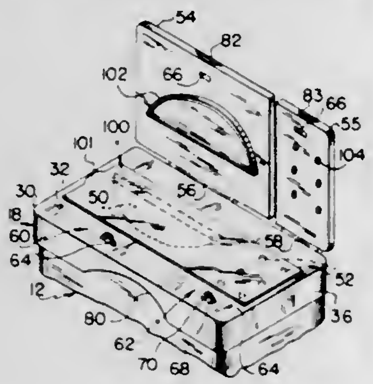

A dispensing closure for a container which includes a body member having a dispensing aperture therein, a cover hinged to the body member for covering and uncovering the dispensing aperture and a removable seal disposed between the body member and cover for sealing the dispensing aperture is provided. Also, a container is provided having a dispensing closure which includes a body member mounted on a rim around a top opening of a can and a cover hinged to the body member for covering and uncovering a dispensing aperture in the body member, and wherein the cover is biased toward an open position and is movable from a closed position in which it is latched to the body member toward its open position in response to exerting a pressure force against an adjacent side portion of the can. Additionally, a container having a dispensing closure which is press fitted over an inwardly curled rim around a top opening of a can to mount the closure on the can and which seats on the rim to provide a seal therebetween is provided.

3,397,824
PLASTIC NOZZLE METAL END CLOSURE ASSEMBLY METHOD
Robert B. Ganung, Glen Ellyn, and Louis H. Huber, Hinsdale, Ill., assignors to National Can Corporation, Chicago, Ill., a corporation of Delaware
Filed Jan. 11, 1967, Ser. No. 608,598
4 Claims. (Cl. 222—570)

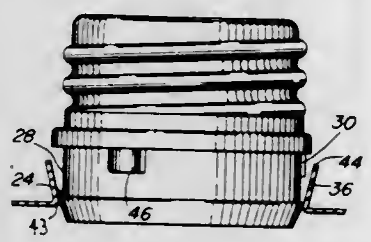

A closure assembly comprising a plastic screw threaded nozzle unit with a lower flange designed to spread apart a notched metal collar on a can top so that locking lugs on the nozzle unit readily pass inside the upper edges of the collar without catching them. The nozzle is rotated to orient the lugs with the notches and lock the nozzle in place. The method of spreading the collar apart, inserting the nozzle at random, and rotating it to a locked position.

3,397,825
METHOD OF FIBRILLATING ORIENTED FILM
Paul E. Wilkins, Bartlesville, Okla, assignor to Phillips Petroleum Company, a corporation of Delaware
Filed Mar. 7, 1966, Ser. No. 532,250
9 Claims. (Cl. 225—3)

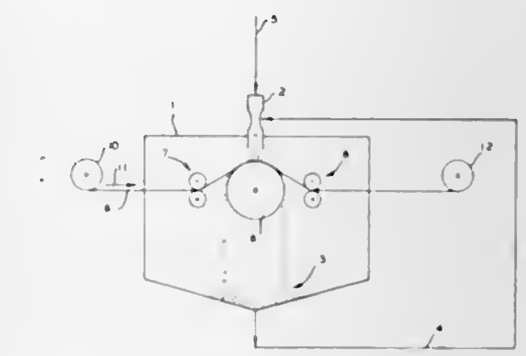

1. In a method for fibrillating an oriented plastic film, the improvement comprising resiliently supporting the film in the area where it is to be fibrillated, and impinging hard, smooth surfaced particles against said film in said supported area so that substantial yielding of the film to the impact force of the particles is prevented, the impact force of said particles being sufficient to cause fibrillation of said film.

3,397,826
METHOD OF DRAWING FORMED MATERIAL FROM A PLURALITY OF SOURCES
Wilbur J. Hawley and Lee Merrick, Wellsville, N.Y., assignors to The Air Preheater Company, Inc., New York, N.Y., a corporation of Delaware
Filed Oct. 23, 1965, Ser. No. 503,048
1 Claim. (Cl. 226—1)

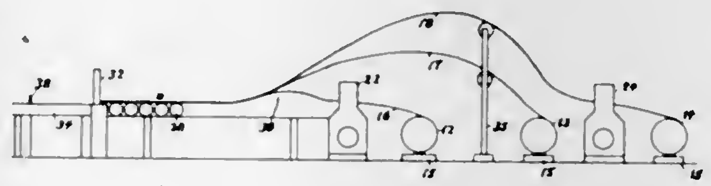

The method of simultaneously drawing sheet material from a plurality of independent sources in superposed layers by supplying the layers to feed rollers having a magnetic field sufficient to hold the layers substantially fixed relative to one another and thereafter rotating the rollers to draw and advance the superposed layers to a point of use.

3,397,827
REVERSIBLE SPRAG-TYPE FILM ESCAPEMENT MECHANISM
Raymond A. Heisler, 657 Dakota Trail, Franklin Lakes, N.J. 07417
Filed Apr. 20, 1967, Ser. No. 632,331
12 Claims. (Cl. 226—59)

This invention pertains to a sprag-type escapement mechanism for film viewers, editors and projectors and provides a pair of spaced sprags and a spring in cooperative relationship thereto adapted for feeding a strip-like film with apertures therein in either direction. The film is fed to and through a viewing path and with each sprag disposed in relation to the viewing path and spring so that as the film is advanced towards one of the sprags the aperture of the film engages the sprag for a period of time to provide intermittent motion thereby. The sprags are spaced

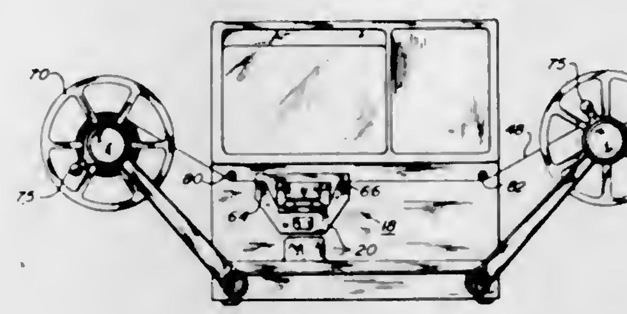

so that only one aperture of a film is engaged by a sprag at a time and in one direction. The sprags are so shaped as to provide inclined surfaces for the smooth advancement of the film in one direction and an engaging surface is formed on the opposite face of the sprag to engage and impede the progress of the film until the aperture is lifted from the sprag.

3,397,828
PNEUMATIC AIR OPERATED FASTENER DRIVING APPARATUS
Dieter Volkmann, Neustadt am Rubenberge, Germany, assignor to Dieter Haubold, doing business as Dieter Haubold Industrielle Negelgerate, Hanover-Westerfeld, Germany
Filed May 16, 1966, Ser. No. 550,385
Claims priority, application Germany, May 17, 1965, H 56,048
7 Claims. (Cl. 227—130)

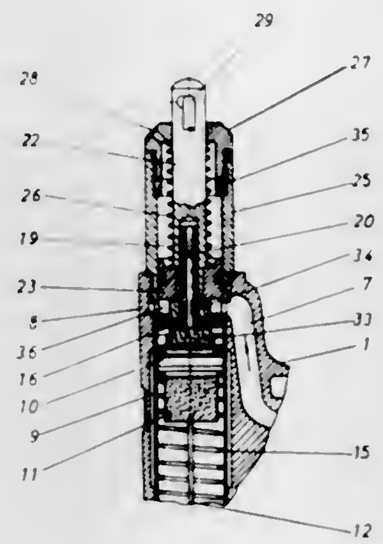

A pneumatic fastener driving apparatus has a piston actuated clamping device for clamping a work piece before the fastener is driven into the work piece by a driving piston. To insure a two-cycle system of operation, the cylinders for the two pistons are separated by a partition and compressed air is supplied to the cylinder for the clamping device actuating piston. A tubular guide is provided for the actuating piston and extends through the partition. Compressed air is admitted to the tubular guide through an inlet port and flows into the cylinder for the driving piston only after the actuating piston has substantially completed its working stroke so as to uncover the inlet port.

3,397,829
COLLAPSIBLE CONTAINER
William B. Wilkins, Roxboro, N.C., assignor to Reinforced Plastic Container Corporation, Roxboro, N.C., a corporation of North Carolina
Filed Dec. 9, 1966, Ser. No. 600,444
5 Claims. (Cl. 229—4.5)

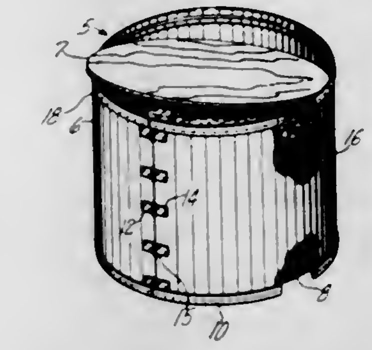

A collapsible container having a circular lateral wall of which joined edges may be disconnected for flattening the wall into planate condition and end walls which, during use, lock into place behind welts fixed to the ends of the lateral wall permitting the collapsibility of the container into a flat package for storage or transfer to a point of use.

3,397,830
BEVERAGE CONTAINERS
Henry M. Chang, 2451 Webb Ave., Bronx, N.Y. 10468
Continuation-in-part of application Ser. No. 655,971, June 6, 1967. This application June 30, 1967, Ser. No. 650,305
7 Claims. (Cl. 229—7)

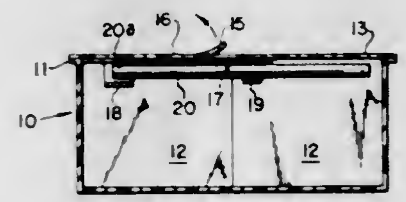

A beverage container wherein the top or cover of the container has a tearable or severable tongue defined by score lines, slits or the like, the tongue being positioned in the vertical plane of a straight line which defines the maximum dimension of the cover. The tongue has its base positioned near the circumferential edge of the cover and its graspable tip positioned remote therefrom, for example in an area close to or at the midpoint of the cover. A first depending loop is carried by the tongue at the base thereof, and a second loop depends from the cover adjacent the tip of the tongue. A drinking straw whose length is slightly less than that of said straight line registers slidably in the said loops. Upon tearing the tongue as far as its base said first loop tilts the adjacent end of the straw upward above the top surface of the cover so that it may be grasped and slid outward from the second loop.

3,397,831
REINFORCED BULK PACK CONTAINER
Marion F. Adams, Indianapolis, Ind., assignor to Inland Container Corporation, Indianapolis, Ind., a corporation of Indiana
Filed Sept. 1, 1967, Ser. No. 665,037
4 Claims. (Cl. 229—14)

A container reinforced at all four side panels and along its corners to accommodate bulk, flowable material and which can be stored or transported in flattened con-

dition after the reinforcing members have been put in place. The container, thus, can be conveniently set up

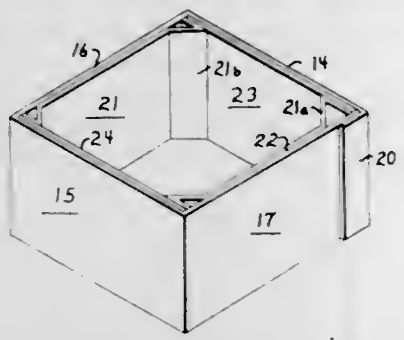

or erected at the loading location without the necessity of then inserting or fastening the reinforcing members.

3,397,832
OFFCENTER BUTT JOINT FOR CARTONS
Edward G. Thiele, Minneapolis, Minn., assignor to Cherry-Burrell Corporation, Minneapolis, Minn., a corporation of Delaware
Filed Apr. 17, 1967, Ser. No. 631,226
3 Claims. (Cl. 229—37)

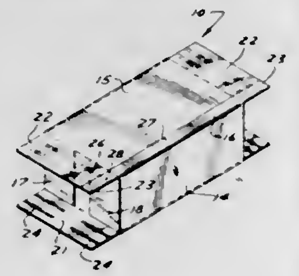

The present disclosure relates to a five panel carton having an off center top butt joint and constructed to have good carton strength (resistance to splitting) in transverse direction without having a strip of tape across the top seam or without lapping and gluing the top panels on the carton. This permits the use of a perforated inner liner in the corrugated paper board used for making the carton to facilitate opening. When erected, the carton of the invention has two top panels that meet along a butt joint that is adjacent one edge of the carton. Each of the top panels has an end panel and these end panels fold down along the ends of the carton. The portions of the end panels that are adjacent the seam between the two top panels are glued to the same end flap (attached to the side panels of the carton) so that there is structural strength preventing the seam between the top end panels from separating when the carton is loaded in a transverse direction.

3,397,833
RECLOSABLE FOLDING CARTON AND BLANK THEREFOR
Charles L. Champlin, Rittman, Ohio, assignor to Packaging Corporation of America, Evanston, Ill., a corporation of Delaware
Filed Sept. 12, 1966, Ser. No. 578,782
3 Claims. (Cl. 229—51)

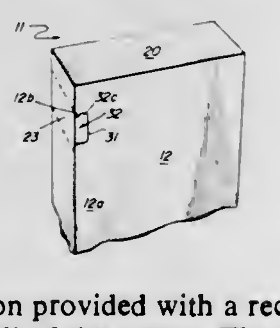

A folding carton provided with a reclosable flap formed from one side wall of the carton. The flap includes a foldable extension having a first portion severable from the carton glue panel and a laminated second portion severable from an adjacent side wall. An unsevered portion of the glue panel and the adjacent side wall cooperating to retain the foldable extension and flap in reclosed position.

3,397,834
RUPTURABLE CONTAINER
Donald V. Hanlon, Creve Coeur, and Harold E. Beasley, Crestwood, Mo., assignors to Container Corporation of America, Chicago, Ill., a corporation of Delaware
Filed Mar. 1, 1967, Ser. No. 619,838
7 Claims. (Cl. 229—51)

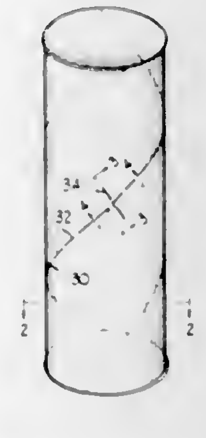

A rupturable cylindrical container formed of a single-ply, helically wound body formed from a ribbon of paperboard and having a helical lap seam; inner and outer liners bonded to said body; said body having a helical line of weakness out of registry with the lap seam and having sufficient strength at said line of weakness to resist rupture along said line when the container is subjected to pressures incurred in normal handling and having sufficient weakness at said line to permit rupture along said line when the container is subjected to unusual pressures incurred in opening so that the container can be completely opened along said line of weakness by twisting the ends of the container in opposite directions to unwrap the container from the contents.

3,397,835
BAG
Sverker A. Henning, Bromma, Sweden, assignor to Arenco Aktiebolag, Vallingby, Sweden
Filed Sept. 8, 1964, Ser. No. 394,684
Claims priority, application Sweden, Oct. 3, 1963, 10,797/63
8 Claims. (Cl. 229—66)

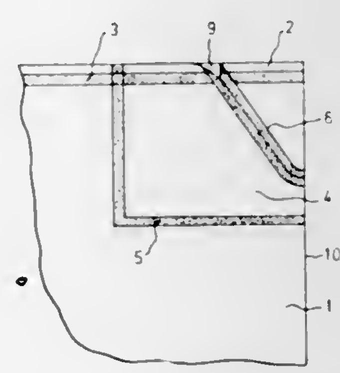

1. Means for opening a sealed bag along a predetermined tear line on said bag comprising a strip of material capable of being torn, a score line forming a tear line on said strip and means securely connecting said strip within an area containing said score line to said bag so that said score line coincides with said predetermined tear line.

3,397,836
FLEXIBLE VANE AND VARIABLE VANE CASCADES
William C. Badger and George W. Mason, Indianapolis, Ind., assignors to General Motors Corporation, Detroit, Mich., a corporation of Delaware
Filed Jan. 3, 1967, Ser. No. 606,713
15 Claims. (Cl. 230—114)

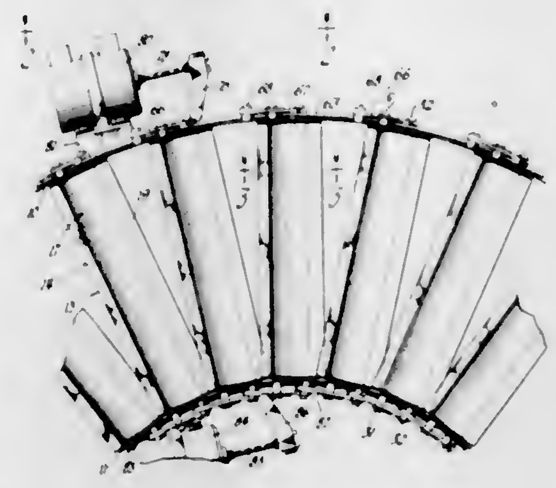

A variable camber vane cascade such as a compressor inlet guide vane ring. The vanes have a fixed strut at the leading edge and flexible skins defining the blade faces terminating in relatively slidable parts at the trailing edge. Slidable couplings are disposed between the faces. Actuating means to flex the blades engage the blades near the midchord and trailing edge.

3,397,837
PRINTING CALCULATING MACHINE HAVING A TRANSVERSELY MOVABLE REGISTER
Teresio Gassino and Bruno Azzalin, Ivrea, Italy, assignors to Ing. C. Olivetti & C. S.p.A., Ivrea, Italy, a corporation of Italy
Filed Apr. 8, 1966, Ser. No. 541,374
Claims priority, application Italy, Apr. 10, 1965, 8,942/65; Feb. 11, 1966, 3,560/66
16 Claims. (Cl. 235—60.24)

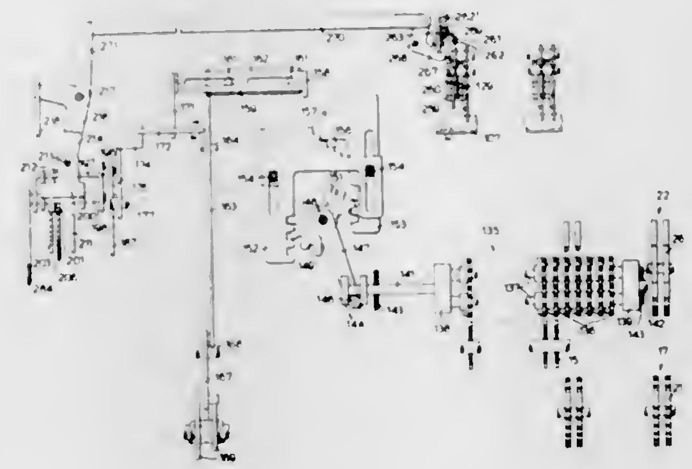

A printing calculating machine having a register provided with a set of denominations exceeding the actuators is adapted to locate the register in an initial transverse position with said exceeding denominations at the right of the actuators and to displace transversely the same under the control of a differentially settable stepped member to cause a predetermined number of said exceeding denominations to cooperate with said actuators to accumulate therein corresponding orders of an amount. A total taking device causes the register to return to the initial position to cut off the denominations of the total contained in the exceeding denominations of said register, and an additional printing member prints said predetermined number of said exceeding denominations simultaneously with the total.

3,397,838
COMPARATIVE VALUE DEVICE
Edgar A. Ostrander, 50 6th St., Lake Ronkonkoma, N.Y. 11779, and Frederick C. Velsor, Jr., 33 Coates Ave., Holbrook, N.Y. 11741
Filed Mar. 10, 1967, Ser. No. 622,339
9 Claims. (Cl. 235—70)

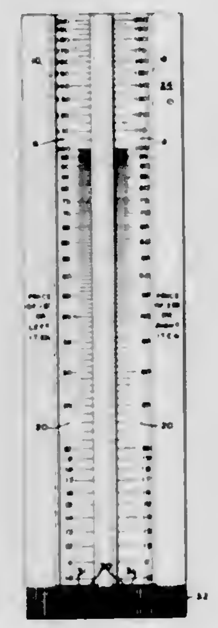

A slide rule-type device including a pair of slide members carrying identical price logarithm scales on one side and a fixed member for slidably supporting the slide members. The fixed member has a logarithmic divided scale of quantity on the side other than the one displaying the price logarithm scales of the slide members. The fixed member further has stop means at one end thereof to preclude movement of the slides beyond said one end.

3,397,839
DEVICE FOR INDICATING AND COMPUTING GAME SCORES
Heinrich Wegener, Gruneburgweg 115, Frankfurt am Main, Germany
Filed Mar. 28, 1967, Ser. No. 626,514
Claims priority, application Germany, Mar. 29, 1966, W 41,244; Jan. 19, 1967, W 43,178
16 Claims. (Cl. 235—91)

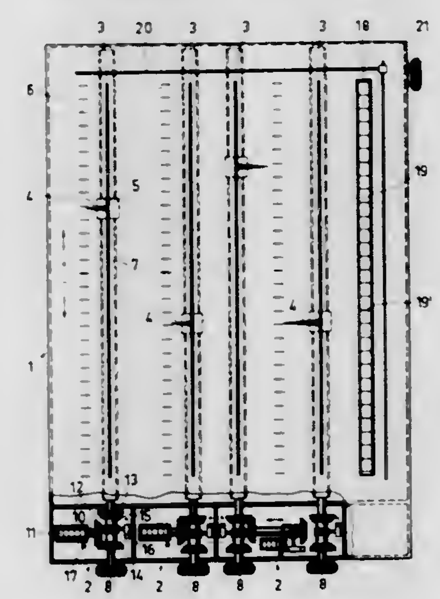

The disclosure is directed to a device for indicating and computing game scores using pointers displaceable over scales, although other indicating means such as movable

scales, light marks, or the like can be used. A housing is provided with one scale, and preferably with several scales, and indicating elements are arranged for displacement over the scales and are connected with setting elements in the housing. Each scale has a zero reference intermediate its ends, and the setting means are operable to displace the indicating elements relative to the zero scale in either a plus or minus direction. Counting mechanisms are associated with each scale, and their indications are visible through a window or aperture in the housing. These counting mechanisms are selectively operated by the associated setting elements whether the setting elements are moving the indicating elements in a plus direction or in a minus direction. Each counting mechanism is provided with a zero reset key.

In a modification of the invention, instead of one counting mechanism being associated with each scale, a counting mechanism may be associated with two or more scales and be selectively connectable to the setting elements of the respective scales.

As a further feature of the invention, suitable means, such as a displaceable scale, is provided whose zero indication may be set at the lowest score, and a marker extending transversely of all the scales may then be used, in association with the displaceable scale, to read the other scores as differences between the lowest score and each one of the respective other scores. A further feature of the disclosure is the provision of dealer indicating means stepped in response to the actuation of the zero reset key of a counting mechanism. These indication means may comprise colored lights, colored disks, or the like.

3,397,840
TIME SCHEDULE CALCULATOR
Robert B. Kennedy, 251 Greenoaks Drive, Atherton, Calif. 94025
Filed June 5, 1967, Ser. No. 643,653
9 Claims. (Cl. 235—120)

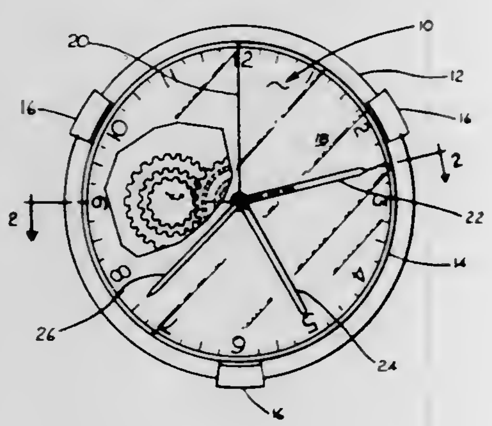

A time schedule calculator having a time scale and a plurality of time indicating hands mounted for movement along the scale in successive integral ratios. The relative position between the time scale and the indicating hands is adjustable.

3,397,841
HOT WATER HEATING SYSTEM
Horst Kieslich, Hunfeld, Germany, assignor to Ondal G.m.b.H., Hunfeld, Hesse, Germany
Filed Mar. 10, 1966, Ser. No. 533,282
11 Claims. (Cl. 237—8)

A first circuit contains a fluid to be heated. A second conduit contains a heated fluid. At least one radiator is connected with the first conduit for dissipating heat and a boiler is connected with the other conduit for heating the fluid therein. A circulator is provided in the one conduit. A thermostat is provided and operative for respectively starting and arresting operation of the circulator when the temperature in the area accommodating the thermostat drops below and rises above a preselected range. An adjustable mixer valve connects portions of the

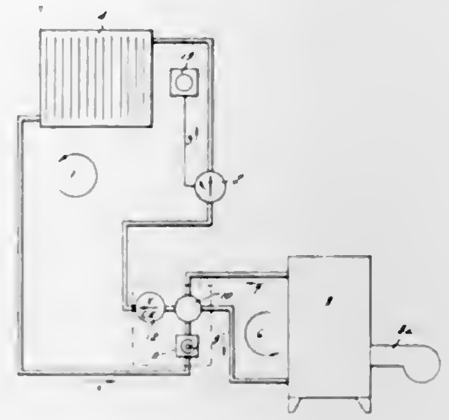

two conduits with one another, a second thermostat is provided which adjusts the mixer valve as a function of fluid temperature in the conduit containing the fluid to be heated and the radiator.

3,397,842
WEIGHTED SPRAY NOZZLE
Walter N. Frandsen, Rijeka, Yugoslavia, assignor to Universal Oil Products Company, Des Plaines, Ill., a corporation of Delaware
Filed Jan. 13, 1967, Ser. No. 609,077
5 Claims. (Cl. 239—206)

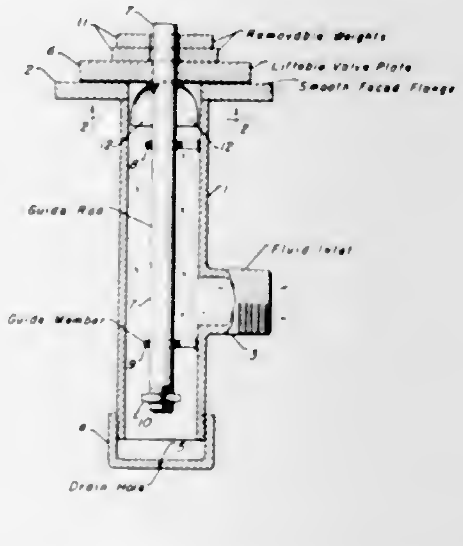

A weighted spray nozzle having a liftable flat valve plate extending across the top of an open-topped housing section so as to permit projecting a sprayed fluid stream through a full 360° circle. A plurality of vanes are positioned below the valve plate and around a depending guide rod so as to provide for rotation of the plate and rod by the outgoing fluid stream.

3,397,843
FUEL NOZZLES
Herbert James Littlehales, Sutton Coldfield, and Peter Birch, Birmingham, England, assignors to Joseph Lucas (Industries) Limited, Birmingham, England, a British company
Filed Nov. 8, 1966, Ser. No. 592,898
4 Claims. (Cl. 239—453)

1. Fuel nozzle means for use in an induction manifold of an internal combustion engine, comprising means providing a pair of passages intended to be mounted with their outlet ends directed in upstream and downstream

directions respectively within the manifold, the inlet ends of the passages being adapted for the supply of fuel thereto under pressure, and closure members in the outlet

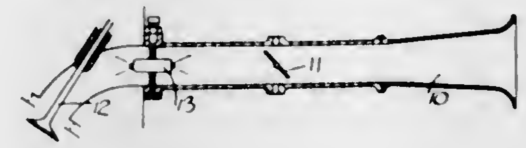

ends of the passages respectively, said closure members being biased towards positions to close the outlet ends of the passages respectively.

3,397,844
PRODUCT SIZING CONTROL IN A GRINDING CIRCUIT CLOSED BY A SEPARATING MEANS
Henry P. Whaley, Aurora, and Mark L. Hovland, Hoyt Lakes, Minn., assignors, by mesne assignments, to Erie Development Company, Cleveland, Ohio, a corporation of Delaware
Filed Sept. 19, 1962, Ser. No. 224,776
7 Claims. (Cl. 241—21)

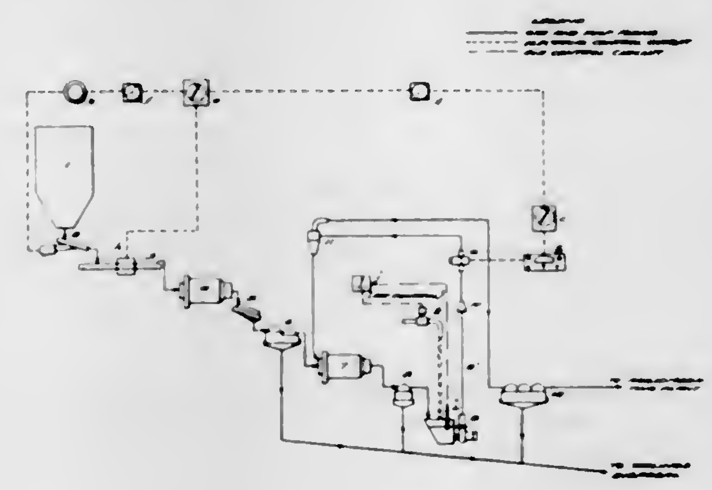

1. In subdividing and concentrating an ore in a grinding circuit including a ball mill, which grinding circuit is close-circuited by a cyclone separator, the improved method of ensuring constant product sizing from the circuit which consists in substantially constantly measuring the density of the feed to the cyclone separator and controlling the circuit at a predetermined density value by varying the new tonnage rate to the grinding circuit in specified increments at specified time intervals the variation being inversely proportional to variation in the density of the feed to the cyclone separator.

3,397,845
GRINDING MILL PLANT
Franz Müller, Bensberg-Refrath, Germany, assignor to Klockner-Humboldt-Deutz, Aktiengesellschaft, Cologne-Deutz, Germany, a corporation of Germany
Filed Apr. 6, 1965, Ser. No. 446,003
Claims priority, application Germany, Apr. 8, 1964, K 52,613
2 Claims. (Cl. 241—43)

Grinding mill plant includes a comminuting machine for primary crushing, a fine grinding mill for secondary crushing and a separator for separating coarsely and finely ground material, a standpipe directly connecting the separator in common to the comminuting machine and the fine grinding mill, hot gas supply means connected to the comminuting machine and the fine grinding mill for conveying ground material therefrom through the standpipe to the separator, and means for reconveying from the separator to the fine grinding mill the coarsely

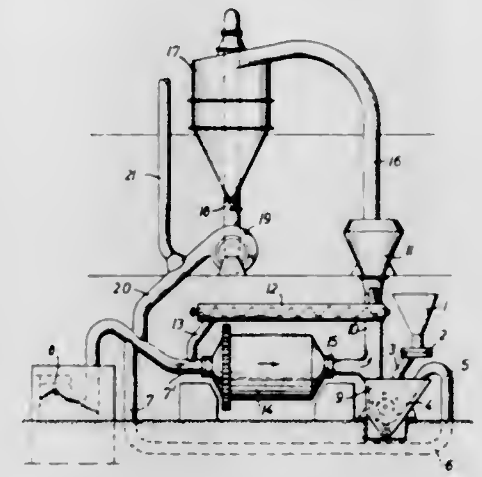

ground material separated by the separator. The comminuting machine is located directly below the lower end of the standpipe whereby coarse material too heavy to be conveyed up the standpipe by the hot gas drops down into the comminuting machine to be further crushed therein.

3,397,846
HYDRAULIC RELEASE FOR GYRATORY CRUSHERS
Fred Curtis Archer, Whitefish Bay, Wis. 53217
Continuation-in-part of application Ser. No. 378,637, June 29, 1964. This application Dec. 2, 1966, Ser. No. 607,110
12 Claims. (Cl. 241—286)

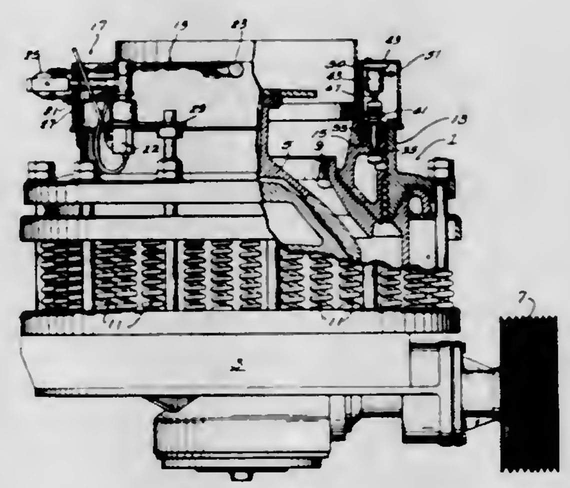

The present invention relates generally to improvements in gyratory crushers, and relates more particularly to an improved mechanism for mechanically clamping the crushing bowl to the frame of the crusher and for hydraulically releasing the clamping action to permit bowl rotation.

3,397,847
ELBOW WINDING APPARATUS
Herbert V. Thaden, 1101 Main St., High Point, N.C. 27262
Filed Aug. 31, 1966, Ser. No. 576,473
11 Claims. (Cl. 242—7)

Winding apparatus for forming objects from resin-impregnated glass fiber roving, characterized by the provision of rotary guide means defining a circular winding zone, and means for displacing an elbow-shaped mandrel axially along a curvilinear path intersecting said winding zone. The mandrel includes a curved portion and at least

one cylindrical portion, and means are provided for axially displacing said rotary guide means when the mandrel is

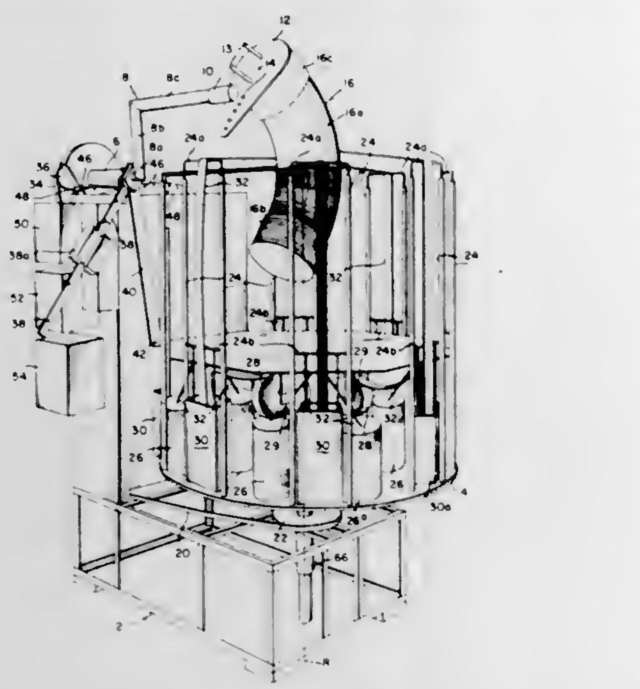

maintained stationary at a position in which the cylindrical portion is adjacent and normal to said winding zone.

3,397,848
WEB REELING AND TENSIONING APPARATUS
Lawrence H. Haskin, Jr., and George W. Kesler, Richmond, Va., assignors to The Inta-Roto Machine Company, Inc., Richmond, Va., a corporation of Virginia
Filed Dec. 6, 1966, Ser. No. 599,632
6 Claims. (Cl. 242—56.2)

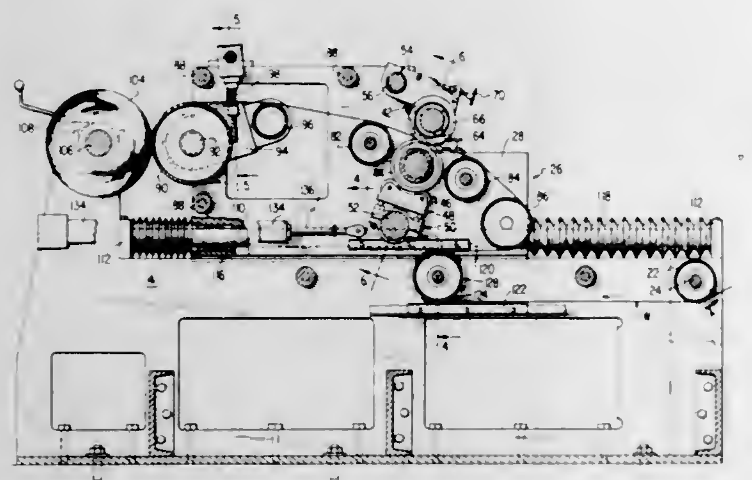

A machine for winding web material upon a mandrel. A fluid operated pressure roller is used to press the web material against the mandrel and an arrangement of idler rolls is used to prevent web tension and especially fluctuations in web tension from affecting the pressure applied by the pressure roller.

3,397,849
INERTIA AND KINETIC ENERGY CONTROLLED SEAT BELT RETRACTING AND LOCKING MECHANISM
Melvin O. Hansen, 20237 6th Ave. S., Seattle, Wash. 98148
Original application Feb. 1, 1966, Ser. No. 524,025, now Patent No. 3,332,720, dated July 25, 1967. Divided and this application May 25, 1967, Ser. No. 645,092
7 Claims. (Cl. 242—107.4)

The structure includes a frame and an internally toothed locking ring rigid and supported by said frame; a normally upright shaft rotatively supported by said frame and coaxially of said ring; a drum secured on said shaft; a seat belt having a flexible part secured to and wound on said drum; resilient means yieldingly urging said drum in a belt retracting direction; a carrier fixedly mounted on said shaft; and further details including at least one locking member supported by said carrier for pivotal movement about an axis generally parallel with and spaced outwardly from the axis of said shaft; said locking member including a weight positioned radially outward from its pivot and approximately in a plane common to the

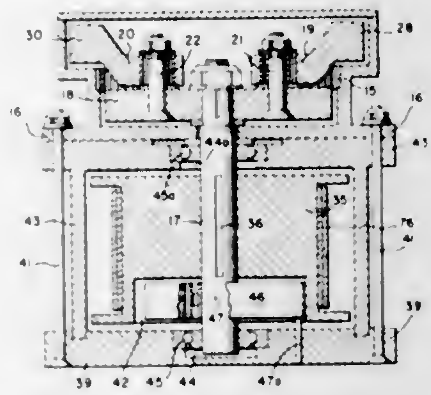

axes of said pivot and said shaft, and a normally disengaged tooth portion rigid with said weight and positioned in advance of said weight relative to the direction of rotary movement of said carrier whereby acceleration by belt pull out of said carrier in excess of a predetermined rate will instantly move said tooth portion into locking engagement with said locking ring. These details are combined with means limiting pivotal movement of said locking member relative to said carrier and spring means lightly urging said locking member into an unlocked position.

3,397,850
FILAMENT WINDING APPARATUS
John C. Anderson, Salt Lake City, Utah, assignor to Engineering Technology, Inc., Salt Lake City, Utah, a corporation of Utah
Filed Oct. 31, 1966, Ser. No. 590,853
14 Claims. (Cl. 242—158)

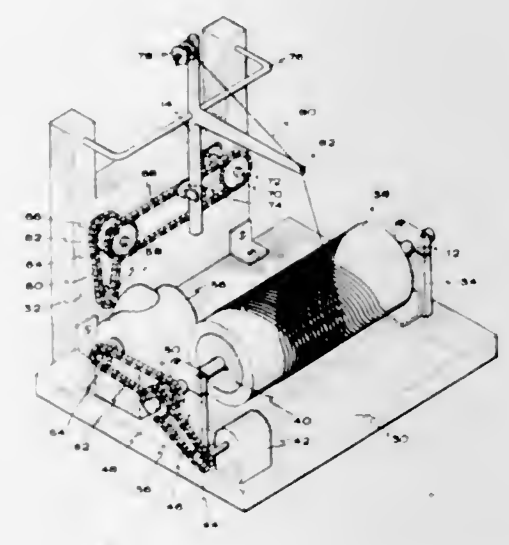

A filament winding apparatus which includes a spindle with appropriate drive means for rotating a mandrel, a carriage for positioning filament on the rotating mandrel, and means for driving the carriage at speed which is the sum of a speed in direct proportion to the speed of the spindle and an additional incremental speed to position the filament on the mandrel in a side by side arrangement. A variable speed device can be used to impart the additional incremental speed to the carriage.

3,397,851
NUTATION DAMPER ASSEMBLY
Douglas P. McNutt, Oxon Hill, Md., assignor to the United States of America as represented by the Secretary of the Navy
Filed Jan. 20, 1967, Ser. No. 610,694
4 Claims. (Cl. 244—3.21)

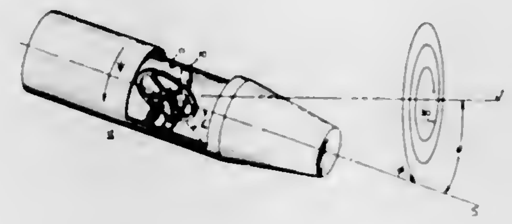

A passive nutation damper for absorbing kinetic energy from an unguided rocket by means of a resonant system with viscoelastic damping. Damping takes place by use of a wheel fixed to one end of a fixed torsion bar secured normal to the rocket axis wherein the wheel is positioned for oscillatory movement in a plane along the axis of the rocket. The undamped natural frequency of the wheel and torsion bar is set slightly lower than the anticipated spin of the rocket and the torsion bar is coated with a viscoelastic plastic which dissipates energy and causes nutational movement.

3,397,852
AIRCRAFT
Sol Katzen, Box 138, Hermosillo, Sonora, Mexico
Filed Aug. 30, 1966, Ser. No. 576,037
6 Claims. (Cl. 244—12)

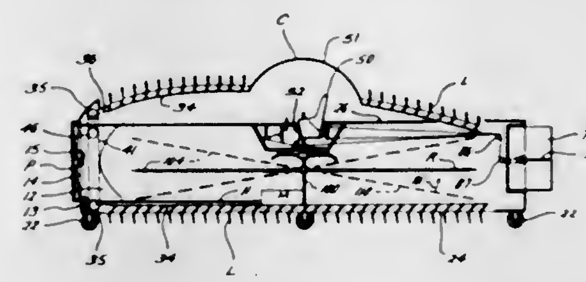

An aircraft for vertical take-off and landing and horizontal flying includes an enclosure having an adjustable rotor blade positioned therein with a suitable air thrust means secured with the enclosure for rotating the rotor blade with an air stream. A plurality of louvers positioned with the upper and lower surface of the enclosure is opened when the rotor blade is rotating to enable the aircraft to be vertically lifted. The louvers are closed when the aircraft is in horizontal flight for enabling the enclosure to form an airfoil for horizontal flight by the air thrust means secured with the enclosure.

3,397,853
FLUID SUSTAINED VEHICLE
William B. Richardson, Sr., 711 Warrington Ave., East Riverton, N.J. 08077
Filed Oct. 5, 1966, Ser. No. 584,614
9 Claims. (Cl. 244—23)

A fluid sustained aircraft in which a fluid diverter has swivelly and axially slidingly controlled motion relative to the main body portion. The diverter can be controlling moved as an operational unit in all directions and can control the velocity of diverted fluid to enable landing of

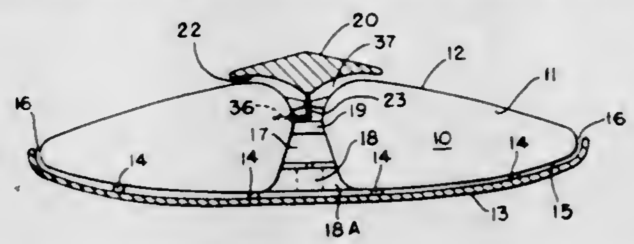

the craft at any desired fluid motor output while allowing for desirous instantaneous craft operational response to adverse landing conditions.

3,397,854
AIRCRAFT OF LARGE WING SPAN
Walter Reyle, 14 Gottorpstrasse, 29 Oldenburg, Germany
Filed Sept. 11, 1964, Ser. No. 395,709
Claims priority, application Germany, Sept. 12, 1963, R 36,107
13 Claims. (Cl. 244—55)

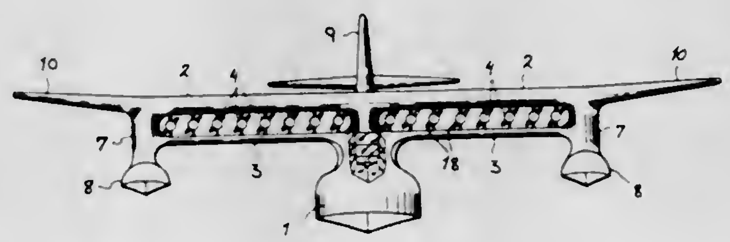

1. An aircraft comprising:
a fuselage;
a wing structure secured to said fuselage and extending outwardly therefrom on opposite sides of said fuselage, said wing structure including at least two vertically spaced generally parallel airfoils having surfaces defining air-flow ducts through said wing structure and between said airfoils on each side of said fuselage;
a plurality of forward-propulsion units mounted between the airfoils on each side of said fuselage for inducing a flow of air through said ducts during movement of said aircraft;
at least one engine nacelle mounted on said wing structure on each side of said fuselage and remote therefrom;
first motive means individual to said forward-propulsion units and connected therewith for respectively driving said units;
second motive means individual to said engine nacelles and respectively connected with the forward-propulsion units on the respective side of said fuselage for jointly driving them, at least one of said first and second motive means producing a heated fluid; and
heat-exchanging means lying along at least one of said surfaces and connected with said one of said motive means for receiving said heated fluid and thereby heating said air flow.

3,397,855
REAR MOUNT SYSTEM FOR AIRCRAFT ENGINES
Allan Burrell Newland, St. Lambert, Quebec, Canada, assignor to United Aircraft of Canada Limited, Longueuil, Quebec, Canada
Filed Dec. 1, 1966, Ser. No. 598,373
6 Claims. (Cl. 248—5)

A rear mount system for an aircraft engine of the kind having a fan duct wall surrounding and spaced from the gas generator casing. The mount is a wishbone type having ball joints at the junction and ends of the limbs, the junction, including the aircraft mount point, passing

through an aperture in the fan duct wall and the space between the junction and the fan duct wall having a seal

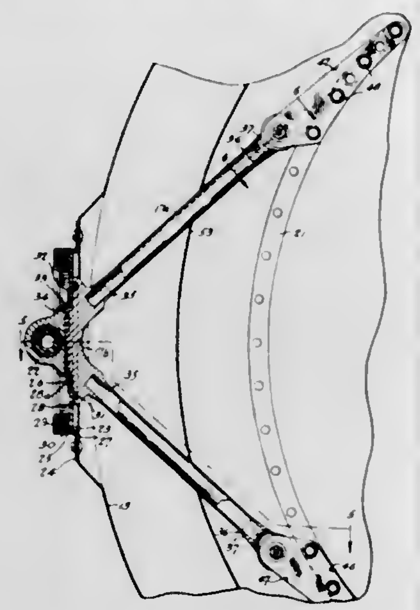

which allows relative freedom of movement in all directions between the junction and the fan duct wall.

3,397,856
STRUCTURAL BEARING PAD
David J. Sullivan, Bridgeport, Conn., and Robert Goldsmith, South Orange, N.J., assignors to General Plastics Corporation, Bloomfield, N.J., a corporation of New Jersey
Filed Nov. 14, 1966, Ser. No. 593,835
9 Claims. (Cl. 248—22)

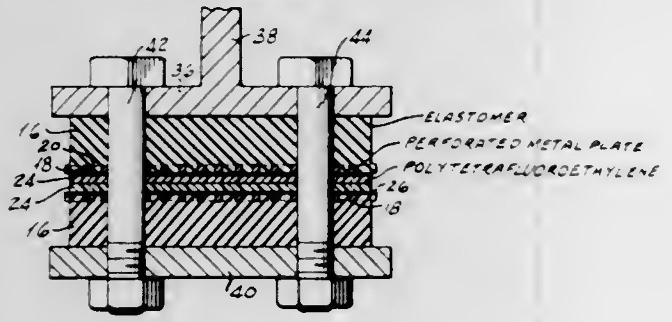

In general our invention contemplates the provision of a composite bearing pad for supporting a structure in which each of an upper pad and a lower pad comprises a relatively thick layer of an elastomer having a perforated metallic sheet embedded therein at one surface thereof and having a polytetrafluoroethylene sheet bonded to the one surface. The upper and lower pads are held in superposed relationship between a plate on the structure and a ground plate by bolts with the polytetrafluoroethylene sheets in contact. We so form the bolt-holes in one of the pads as to permit limited relative movement between the pads in response to thermal expansion and contraction of the structure.

3,397,857
VIBRATION DAMPING LINE SUSPENSION APPARATUS
Seymour N. Schlein, University Heights, Ohio, assignor to The Fanner Manufacturing Company, a Divison of Textron Inc., Cleveland, Ohio, a corporation of Rhode Island
Continuation-in-part of application Ser. No. 345,225, Feb. 17, 1964. This application July 11, 1966, Ser. No. 564,139
The portion of the term of the patent subsequent to July 12, 1983, has been disclaimed
26 Claims. (Cl. 248—63)

1. A line suspension device comprising, a pair of support members, each of said support members being split block means together defining a central bore, means to suspend said support members from a support and pivotally mount them for pivotal movement in a vertical plane, each of said support members holding a line en-

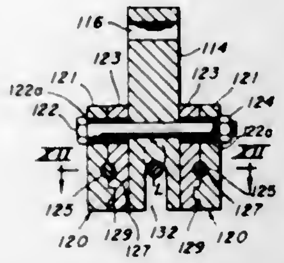

gaging element, each of said line engaging elements including at least one flexible extension portion extending from said support member and a gripped portion disposed within said central bore, said extension portions including means to engage a line.

3,397,858
CONCRETE SLAB FORM PANEL-SUPPORTING BRACKET
Walter D. Williams, River Forest, Ill., assignor to Symons Mfg. Company, Des Plaines, Ill., a corporation of Delaware
Filed Apr. 4, 1966, Ser. No. 539,782
6 Claims. (Cl. 249—18)

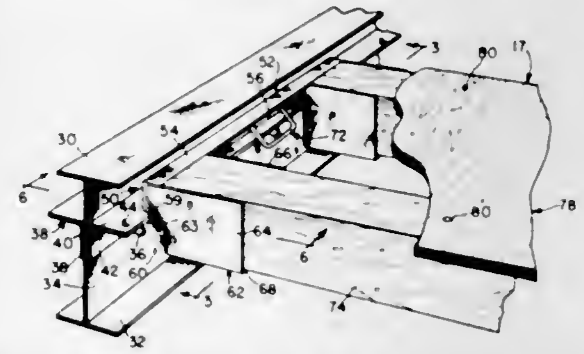

A panel-supporting bracket assembly which, in combination with an identical bracket assembly, serves to support two wooden beams in parallelism and in bridging relationship with respect to an odd dimension opening between two horizontal "Steel-Ply" panels so that a plywood sheet may be supported on the beams to fill the opening.

3,397,859
ELECTROMECHANICAL TRANSDUCER AND VALVE OPERATED THEREBY
John Sterling Barnett, Sepulveda, Calif., assignor to Febco, Inc., Sun Valley, Calif., a corporation of California
Filed June 14, 1965, Ser. No. 468,183
6 Claims. (Cl. 251—11)

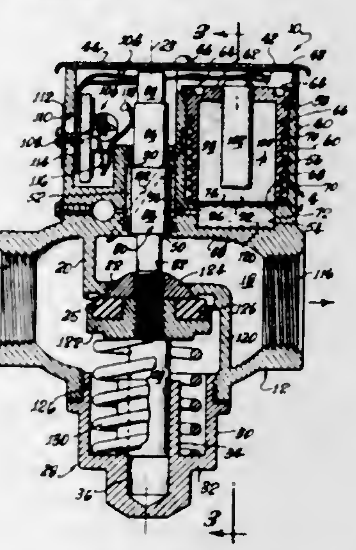

A valve adapted for remote control by an electric heater which causes a plastic mass having a high coefficient of thermal expansion to expand and to actuate a hydraulic means to open the valve against a spring bias which tends constantly to close it. As the valve tends to close, it opens a normally closed, spring biased switch disabling the heater and allowing the mass to cool and contract with resultant closing of the valve and concurrent closing of the switch. The intermittent supply of current to the heater maintains the valve substantially open with some slight fluctuation thereof with a minimum demand on the operating current and avoidance of overheating the expandable mass.

3,397,860
VALVE FOR CONCRETE PUMP OR SIMILAR MACHINE
Richard W. Bushmeyer, Rockford, Ill., assignor to J. I. Case Company, a corporation of Wisconsin
Filed Apr. 19, 1966, Ser. No. 543,691
1 Claim. (Cl. 251—61.1)

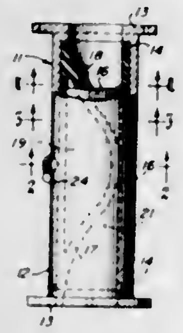

A conduit section normally open for the flow of material therethrough is provided with valve means for controlling such flow. The valve means comprises a tubular member held within the conduit section by internal shoulders adjacent opposite ends of the section. A flexible diaphragm has its outer edges permanently sealed to the inner wall surface of the tubular member to form a separate fluid receiving compartment within the tubular member. Fluid flowing into the compartment under pressure moves the diaphragm into sealing engagement with the inner wall surface of the tubular member to completely close the opening therethrough. Release of the pressure allows the material to move the diaphragm back to its initial position and resume its flow.

3,397,861
VALVE SEAT WITH BACKING
Domer Scaramucci, 3245 S. Hattie, Oklahoma City, Okla. 73129
Filed Aug. 25, 1966, Ser. No. 575,025
24 Claims. (Cl. 251—175)

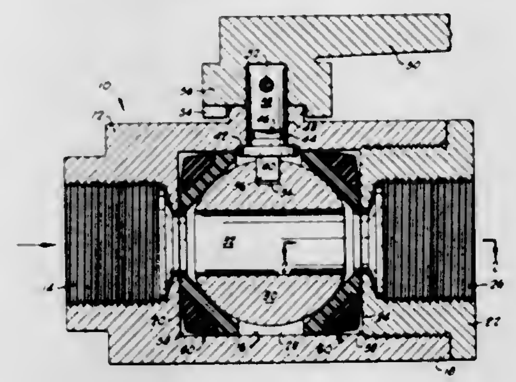

1. A valve, comprising:
a body having an inlet and an outlet communicating with a valve chamber located in the central portion of the body;
a valve member positioned in the valve chamber for movement downstream toward the outlet when in a closed position; and
an annular valve seat in the valve chamber encircling the outlet to prevent leakage of fluid from the valve chamber around the valve member into the outlet, comprising:
an elastic material bearing ring supported in the valve chamber in engagement with the valve member for flexing movement of a portion thereof generally downstream with the valve member when the valve member moves downstream; and
an elastic material backing ring, having a lower modulus of elasticity than the bearing ring, secured to the side of the bearing ring opposite to the side of the bearing ring which engages the valve member in a position to engage the adjacent wall of the valve chamber and limit the flexing movement of the bearing ring.

3,397,862
WEDGE GATE VACUUM VALVE MECHANISM WITH COATED SEAT SEAL
Thomas H. Batzer, Livermore, Cleve A. Gunderson, San Leandro, and John J. Murphy, Livermore, Calif., assignors to the United States of America as represented by the United States Atomic Energy Commission
Filed Dec. 16, 1965, Ser. No. 514,411
1 Claim. (Cl. 251—204)

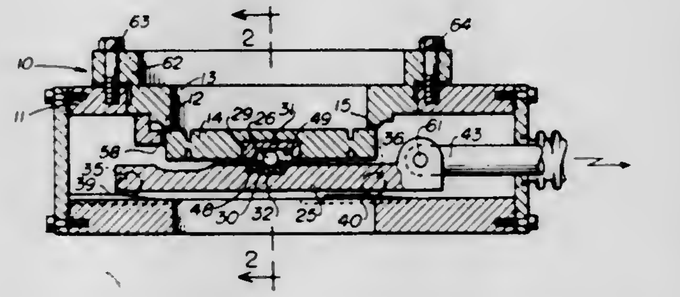

A vacuum gate valve for sealing a port of large cross-sectional area in an ultra-high vacuum system, having a flat, circular seat surface surrounding the port, coated with a thin film of polymerized tetrafluoroethylene; a valve gate closure plate having an integral annularly inclined sealing surface which is bevelled toward the center of the gate to compensate for bending produced in the gate by a large, centrally applied loading force on the closure plate for engaging the inclined sealing surface of the plate against the coated, flat circular seat surface, which in turn produces a substantially flat, high integrity hermetic seal between valve gate and seat.

3,397,863
ADJUSTABLE STOP TUBE
Frank W. Bell, Avon, Ohio, assignor to Standard Screw Company, Bellwood, Ill., a corporation of New Jersey
Filed May 18, 1966, Ser. No. 550,987
6 Claims. (Cl. 251—285)

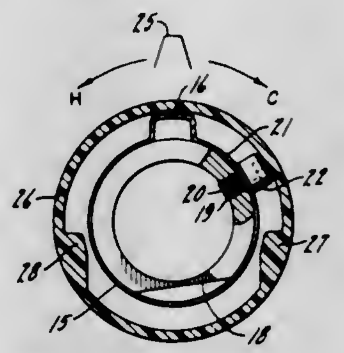

1. In combination with a faucet including a rotary stem, a handle fixed on said stem and by which it may be rotated, a plurality of stops on said handle and an adjust-

able stop means fixed in relation to said stem and said handle, said adjustable stop means including a stop sleeve, a stop vane on said sleeve, means for anchoring said sleeve, and an adjustable stop on said sleeve, said sleeve having a slot, there being a fastener extending through said slot and adapted to be secured in adjusted position along said slot, said fastener comprising said adjustable stops, one of said stops on said handle being positioned to contact said stop vane and the other of said stops on said handle being positioned to contact said adjustable stop.

3,397,864
MULTI-STAGE ROTARY ENGINE
Verner E. Sprouse and Vernon H. Williams, both of 1804 E. 22nd St., Columbus, Ind. 47201
Filed Feb. 27, 1967, Ser. No. 618,966
7 Claims. (Cl. 253—46)

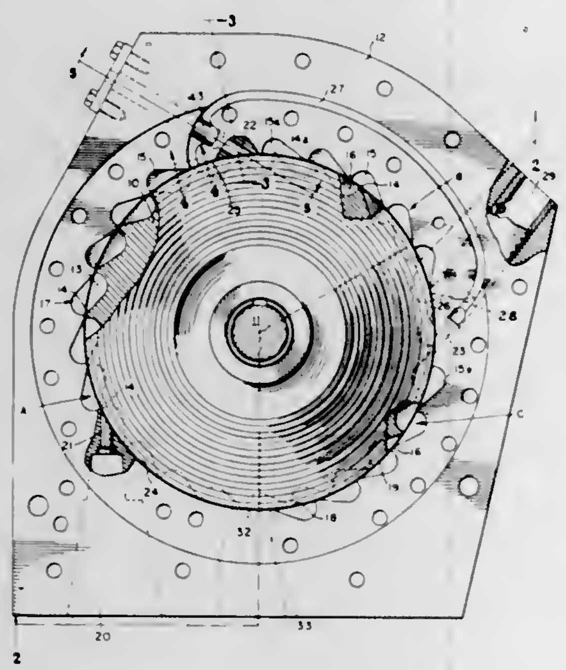

A rotary engine having a rotor with a plurality of cells therearound within a stator having like cells in a plurality of separated stages circumferentially spaced to vary openings of rotor cells into stator cells in each rotor rotation. Steam from one stage is divided to flow in part to a following stage and in part to by-pass that stage to enter a stage therebeyond.

3,397,865
BLADED ROTOR FOR A FLUID FLOW MACHINE SUCH AS A GAS TURBINE ENGINE
Ronald Catlow, Nelson, and Peter Alfred Shaw and Raymond Hart, Derby, England, assignors to Rolls-Royce Limited, Derby, England, a British company
Filed Aug. 25, 1967, Ser. No. 663,415
Claims priority, application Great Britain, Sept. 13, 1966, 40,932/66
4 Claims. (Cl. 253—77)

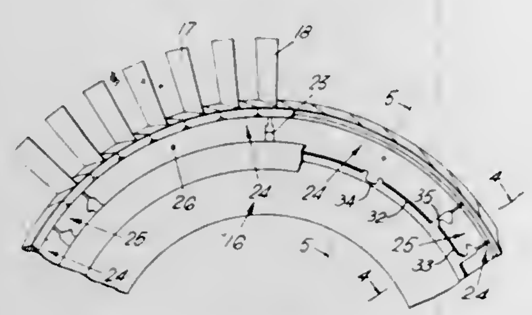

The invention concerns a bladed rotor (e.g., for a gas turbine engine compressor) whose blades are locked in position by means of a number of retaining plates and at least one lock-plate, all of which extend substantially throughout the axial and radial extent of aligned grooves in the rotor disc and root portions of the blades. Each lock-plate extends throughout a part only of the radial extent of the groove in the disc to permit it to be positioned after the retaining plates have been assembled, and each lock-plate is provided with at least one tab which may be bent to engage the disc to retain the said lock-plate in position.

3,397,866
FENCE CONSTRUCTION
Corwin G. Hockett, Henrico County, Va., assignor to Reynolds Metals Company, Richmond, Va., a corporation of Delaware
Filed Feb. 8, 1966, Ser. No. 525,917
12 Claims. (Cl. 256—22)

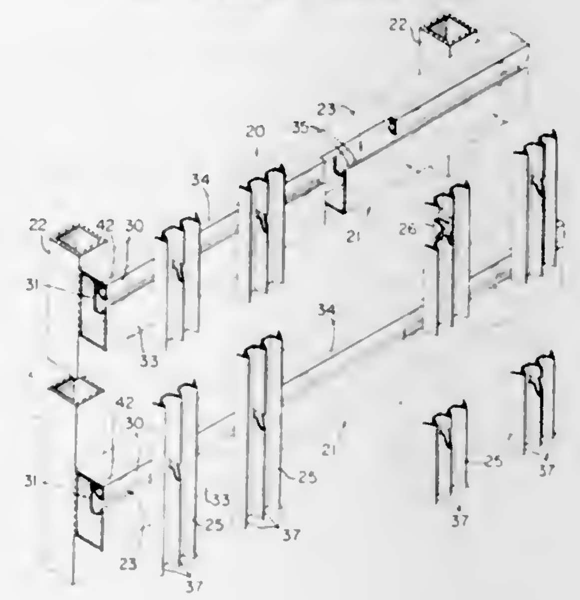

This disclosure relates to an improved fence construction in which a plurality of rails each having an elongated groove extending therealong are fastened in position to associated supports with each groove opening upwardly and a plurality of pickets having downwardly opening hooks are suspended along the horizontal rails with each hook being received in an associated groove in each rail. A plurality of projection means are provided in each rail and each cooperates with an associated picket to provide a desired spacing for the pickets along each rail whereupon the pickets are then locked in position along the rails using unique lock means.

3,397,867
CUPS, MUGS OR SIMILAR LIQUID CONTAINERS
Teunis van 't Hoff, Rotterdam, Netherlands, assignor to Impromex A.G., Freibourg, Switzerland, a company of Switzerland
Filed Dec. 21, 1966, Ser. No. 603,669
Claims priority, application Netherlands, Dec. 24, 1965, 6516926
7 Claims. (Cl. 259—1)

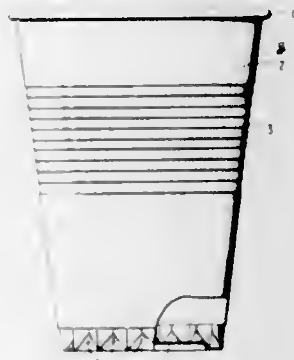

Internal projections of a saw tooth configuration placed near the bottom of a cup, mug or similar vessel to facil-

itate and promote the mixing of material placed in the cup as liquid is added.

3,397,868
METHOD FOR DISPENSING AND MIXING MEASURED AMOUNTS OF LIQUID
Edward A. Schlernitzauer, La Grange Park, Ill., assignor to Swift & Company, Chicago, Ill., a corporation of Illinois
Original application June 1, 1964, Ser. No. 371,396, now Patent No. 3,326,530, dated June 20, 1967. Divided and this application Apr. 25, 1967, Ser. No. 633,610
5 Claims. (Cl. 259—8)

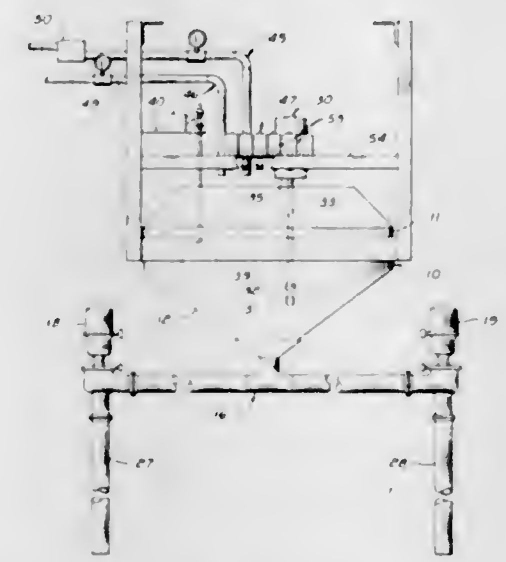

Liquid-form flavoring ingredients are mixed in desired proportions for subsequent introduction into a food emulsion by first introducing a brine solution at about 32° F. into a mixing vessel and then successively adding thereto a lesser quantity of heated syrup and a minor portion of liquid spice while agitating the liquids within the vessel. Apparatus includes a mixing vessel with discharge valves, and an agitator. Brine and syrup supplies are connected through conduits with suitable flow indicators and valves; and a plurality of spices are available through separate pressurized reservoirs and dispensing valves.

3,397,869
HYDROFOIL AGITATOR BLADE
Donald S. Webster, Aiken, S.C., assignor to the United States of America as represented by the United States Atomic Energy Commission
Filed May 3, 1967, Ser. No. 637,041
9 Claims. (Cl. 259—108)

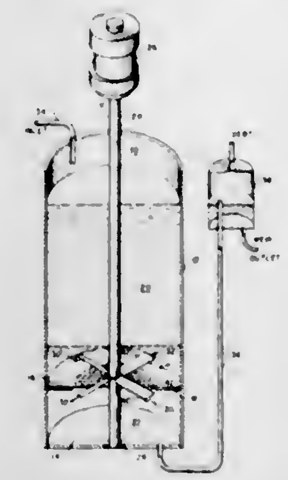

A rotary agitator apparatus, including a cylindrical vessel with a screen or perforated plate positioned near its bottom for supporting a solid-liquid mixture, such as an ion exchange resin bed, and mechanically driven radial blades spaced above the plate for stirring the mixture. The agitator blades are hydrofoils that are positioned and rotated so as to momentarily reduce the pressure of the mixture beneath the blades. By reducing the pressure beneath the blades there is a momentary reversal of net downward flow and fines, that may tend to plug the perforated plate, are maintained in suspension.

3,397,870
CARBONATOR TANK
Gerald P. McCann, Glendale, and Myron Caton, Mission Hills, Calif., assignors to McCann's Engineering & Mfg. Co., Glendale, Calif., a corporation of California
Filed Aug. 19, 1966, Ser. No. 573,643
4 Claims. (Cl. 261—19)

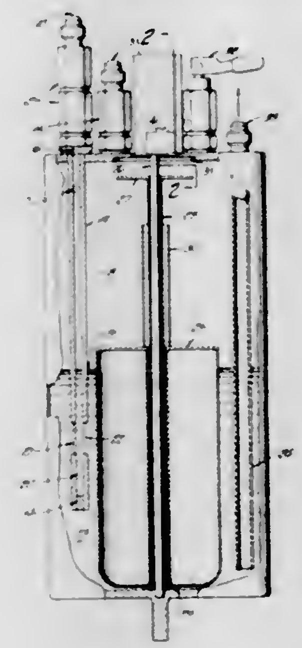

A device for impregnating water with carbon dioxide which includes a gas-water mixing means which carbonates the water through a combined venturi action followed by increased mixing and bubbling of the gas through the water in the tank; the unit further including a float means which actuates a control means to control the introduction of water into the tank so that the level is maintained between desired maximum and minimum levels.

3,397,871
CARBONATOR
William J. Hasselberg, Forest Park, Ill., assignor to Hasselberg, Inc., West Seneca, N.Y., a corporation of New York
Filed Oct. 22, 1965, Ser. No. 501,662
6 Claims. (Cl. 261—75)

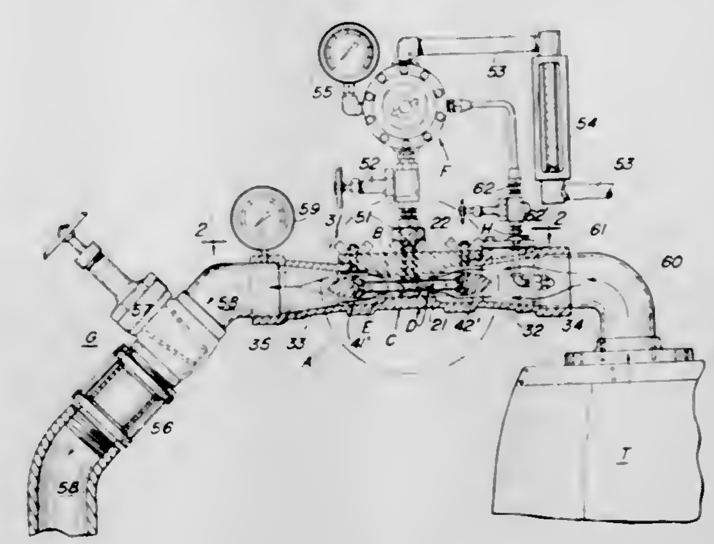

A beer carbonator apparatus having two elements embraced one within the other, the one of which provides a gas chamber within a beverage-flow channel between

the two elements and through the porous walls of the first element the gas is injected as a very fine mist into the beverage passing through the beverage-flow channel between the elements, in a precisely controlled condition.

3,397,872
CASCADE TRAYS FOR AN EVAPORATOR AND A METHOD OF FILLING SUCH TRAYS
Pieter W. Schipper, Elm Grove, Wis., assignor, by mesne assignments, to Milwaukee Chaplet & Mfg. Company, Inc., Milwaukee, Wis., a corporation of Wisconsin
Filed Oct. 18, 1965, Ser. No. 496,909
9 Claims. (Cl. 261—110)

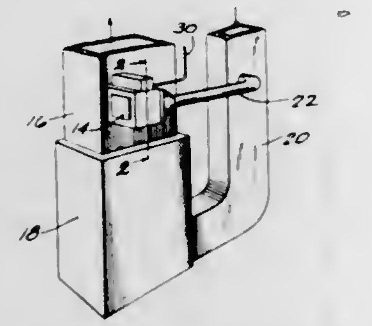

A humidifier which has a vertically stacked series of cascade trays. The centers of the trays have interlocking annular depending skirts which act as overflow weirs to control the flow of water to the trays from a feed hopper mounted above the uppermost tray. The interlocked skirts also act as traps to prevent backflow of water from a tray through the skirts to the next lower tray.

3,397,873
FLUID BED FURNACE AND THE LIKE
Charles I. Ritchie, Cleveland Heights, and John A. Karpac, North Royalton, Ohio, assignors, by mesne assignments, to Bangor Punta Operations, Inc., Bangor, Maine, a corporation of New York
Filed Nov. 20, 1964, Ser. No. 412,626
6 Claims. (Cl. 263—21)

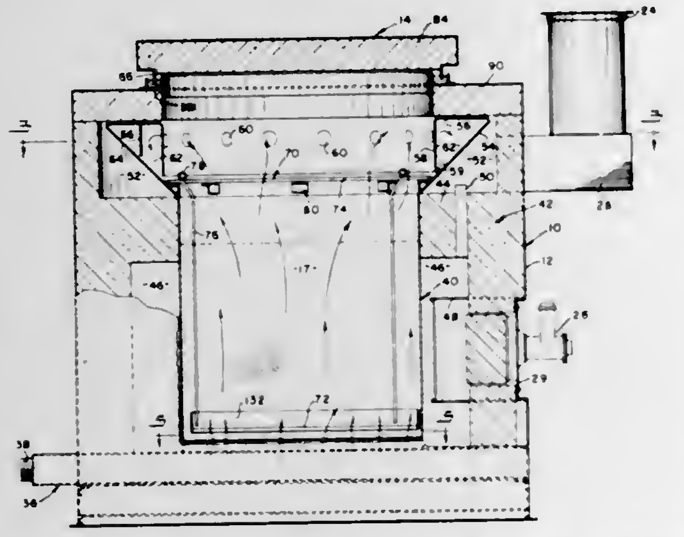

4. Fluid bed apparatus for treating articles immersed therein comprising a vessel containing a body of finely divided solid material, cover means for closing said vessel, gas-fired means for heating said vessel and thus said body of finely divided material, means for supplying fluidizing gas under pressure to said body of finely divided solid material for fluidizing the same, means defining an annular passageway within the upper region of said apparatus for receiving such fluidizing gas after it has passed upwardly through said body of finely divided solid material, said passageway communicating with an exhaust stack for exhausting from said apparatus said fluidizing gas and the gaseous products of combustion, and conduit means for conveying the products of combustion of said heating means directly to said passageway in the region thereof generally opposite to said exhaust stack thereby to provide intimate commingling of said fluidizing gas and organic fumes and said gaseous products of combustion thereby effecting substantially complete combustion of said fumes prior to reaching said exhaust stack.

3,397,874
SOAKING PIT AND METHOD OF OPERATING THE SAME
Alfred Augustine, Pittsburgh, Pa., assignor to Loftus Engineering Corporation, Pittsburgh, Pa., a corporation of Maryland
Filed Oct. 28, 1966, Ser. No. 590,265
15 Claims. (Cl. 263—40)

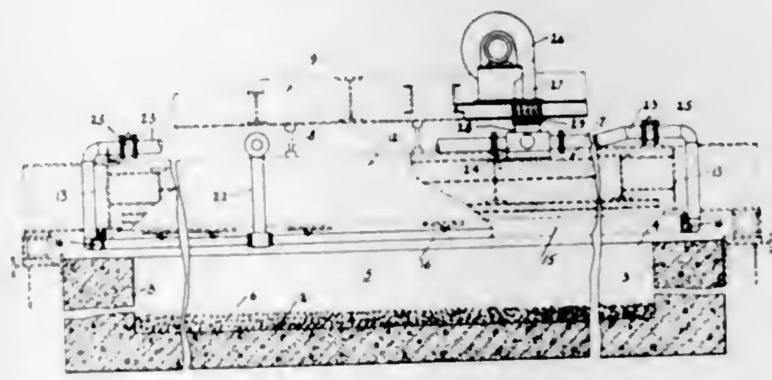

A soaking pit having a cover is provided that is movable horizontally from a position over the pit to a position clear of the pit without the necessity of also raising and lowering the cover as is the case where conventional sand seals are employed. When the cover is over the pit in operating position there is an open gap between the cover and top wall of the furnace around the entire periphery of the furnace. An air duct system extending around the gap projects a high velocity curtain of air across the gap in such manner as to form a pressure barrier against the escape through the gap of furnace gases but the air flows outwardly around the outer periphery of the gap, and not into the furnace. The invention not only eliminates the usual sand seals and the need for raising or lowering the cover, but provides a new method of operating a soaking pit since higher pressures can be maintained under the cover than with sand seals, making it possible to maintain a positive pressure inside the pit from the cover to the level of the pit bottom.

3,397,875
APPARATUS FOR MAINTAINING A CARBURIZING ATMOSPHERE DURING HEAT TREATMENT
Raymond L. Davis II, Newtown Square, Pa., assignor to Leeds & Northrup Company, Philadelphia, Pa., a corporation of Pennsylvania
Continuation-in-part of application Ser. No. 279,053, May 9, 1963. This application May 20, 1966, Ser. No. 551,731
5 Claims. (Cl. 266—5)

1. A system for maintaining a carburizing atmosphere for work undergoing heat treatment and for carburizing work up to at least 1.2% carbon without soot deposition comprising:
a furnace provided with heat-generating means and a treating chamber heated by said heat-generating means and adapted to receive work to be heat treated under a protective atmosphere of the carburizing type,
a fan disposed within said treating chamber adjacent a wall thereof,

driving means for said fan for producing violent agitation and circulation of the gases forming the furnace atmosphere within said treating chamber at high rates of flow to establish thermal equilibrium throughout said work chamber and to maintain chemical equilibria between the constituents of said atmosphere and the surface of the work,
conduit means having both an inlet and an outlet in communication with said treating chamber and forming a closed external recirculation path for withdrawal and return of atmosphere to and from the treating chamber,
means including a gas compressor in said conduit means having its inlet connected to said outlet from said treating chamber and its outlet connected to said inlet to said treating chamber for movement of furnace atmosphere through said closed external recirculation path,
valve means associated with said conduit means for regulating the rate of flow of the stream of furnace atmosphere to be recirculated,
means for cooling said stream prior to its arrival at said gas compressor,
filtering means included in said conduit means for removing from said stream, after cooling thereof, solid and liquid materials,

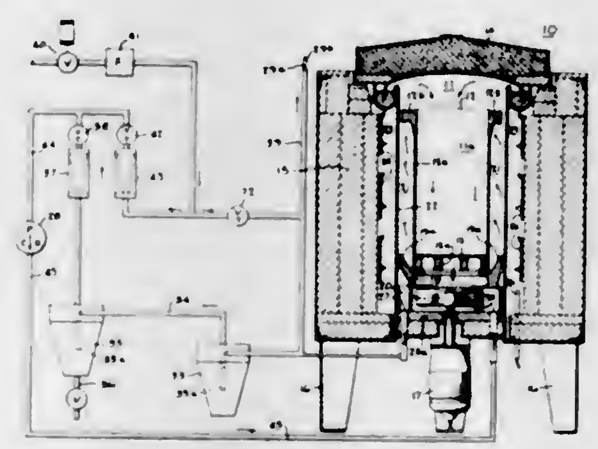

supply means for introducing carburizing material into said stream on the inlet side of said gas compressor, said compressor serving as a mixing means to disperse the carburizing material thoroughly through said stream, and said supply means serving in conjunction with said gas compressor to develop within said treating chamber a positive pressure for minimizing ingress into said treating chamber of oxygen and its compounds thereby quantitatively to reduce the amount of carburizing material required to carburize the work to a desired level under soot-free conditions,
means for controlling the rate of flow of said carburizing material with reference to the selected carburizing potential for said treating chamber,
a mixing zone in heat exchange relationship with said heat-generating means and including said fan and said inlet of said conduit means located adjacent said fan for flow therethrough of the resultant mixture, prior to arrival at the treating zone of said treating chamber, for preventing a sudden reduction in the temperature of the atmosphere in the region of said work and for attainment of equilibrium conditions of said mixture without the formation of soot in the atmosphere in the region of said work, and
a temperature control regulating system for said heat-generating means for regulating the rate of heat generation to maintain the temperature of said treating chamber at a selected temperature within a range of from 1400° F. to 2000° F. to maintain substantially constant the equilibrium constants of the gas ratios of the atmosphere within said treating chamber with the ratios respectively of $CO:CO_2$, $H_2:CH_4$ and $H_2:H_2O$ at high values.

3,397,876
LIQUID-SOLID REACTION APPARATUS
Thomas Valle, Idaho Springs, Colo., assignor to The Fall River Exploration and Mining Company, Idaho Springs, Colo., a corporation of Colorado
Filed Jan. 14, 1966, Ser. No. 520,554
3 Claims. (Cl. 266—22)

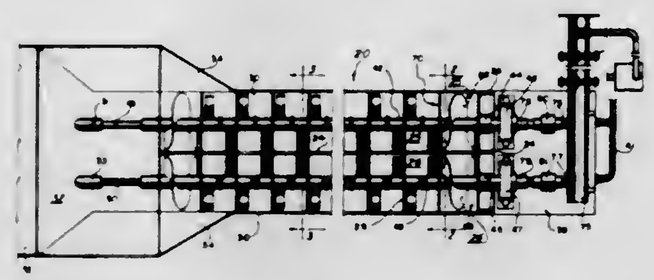

The disclosure relates to an apparatus for use in carrying out a continuous liquid-solid reaction process. The apparatus comprises an elongated tank having a plurality of transverse partitions dividing it into a plurality of serially aligned chambers. A liquid-solid slurry is introduced into a chamber at one end of the apparatus. Openings are provided in each of the partitions so that the slurry flows serially through the chambers. A pair of shafts extends through the apparatus, each shaft having an agitator in each chamber. The shafts are hollow and nozzles extend outwardly therefrom adjacent each paddle for discharging a liquid into the slurry in each chamber.

3,397,877
BLAST FURNACE AUTOMATIC CONTROL APPARATUS
Julius H. Strassburger, Steubenville, Ohio, assignor to National Steel Corporation, a corporation of Delaware
Original application Oct. 25, 1962, Ser. No. 232,932, now Patent No. 3,346,250, dated Oct. 10, 1967. Divided and this application June 28, 1967, Ser. No. 659,258
2 Claims. (Cl. 266—30)

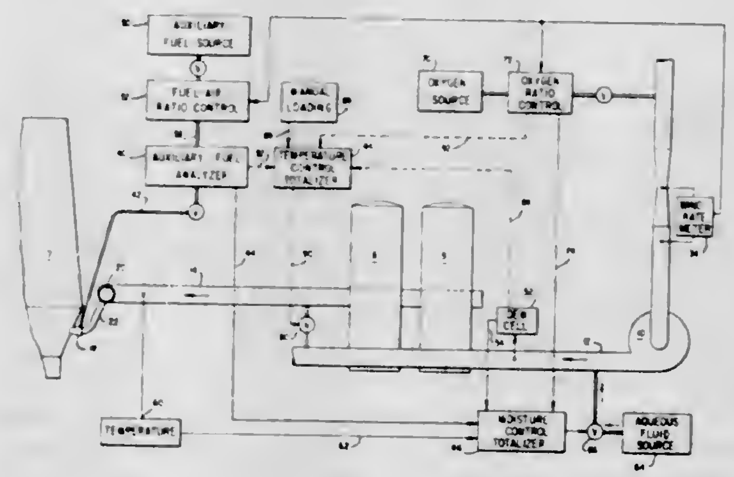

1. Blast furnace control apparatus for adding auxiliary fuel to a blast furnace system which includes a blast furnace with tuyere means for introducing a blast gas, stove means for heating the blast gas, and a hot blast main connected between the stove means and the tuyere means comprising
means for adding auxiliary fuel to the blast furnace contiguous with the blast gas,

means for measuring auxiliary fuel additions and generating a signal in response to such measurement indicative of the endothermic reqirements of the auxiliary fuel additions, and
means for controlling the blast gas temperature in accordance with the endothermic requirements of the auxiliary fuel additions.

3,397,878
UNDER-BATH TUYERE
Ronald L. W. Holmes, New Providence, and Maurice F. Hoffman, Whippany, N.J., assignors to Union Carbide Corporation, a corporation of New York
Filed Nov. 19, 1965, Ser. No. 508,709
3 Claims. (Cl. 266—41)

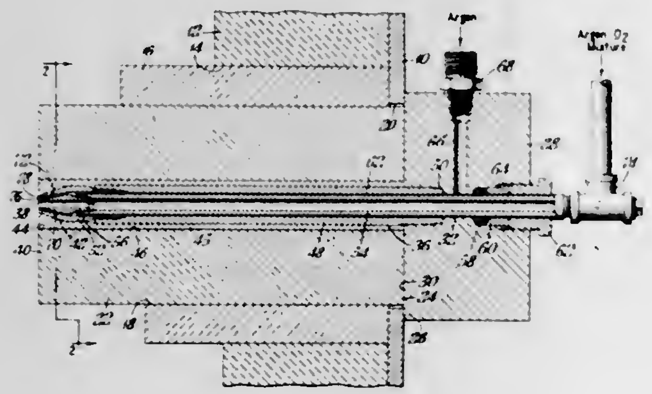

A tuyere for introducing gas beneath the surface of a molten metal bath contained in a metal processing vessel having a refractory lining provided therein with an opening, which comprises: a metal blowpipe extending through such opening having nozzle means for discharging a reactive gas stream into such bath, and a refractory sealing material surrounding such blowpipe. The blowpipe is also provided with gas passage means for simultaneously discharging an annular protective stream of inert gas, through such nozzle means, into the bath in concentric relation with such reactive gas stream. Also, such nozzle means are tapered at the discharge end so as to expose as small a surface area as possible to such bath.

3,397,879
CLAMP
London T. Morawski and John J. Parker, Detroit, Mich. (both of 11487 E. Nine Mile Road, Van Dyke, Mich.)
Filed July 5, 1966, Ser. No. 562,798
10 Claims. (Cl. 269—91)

1. A clamp structure comprising a body, an internally helically splined member fixed on said body against rotation and axially slidable thereon, spring means biasing said internally splined member axially in one direction against a shoulder on said body, an externally helically splined member meshing with the internally splined member, a clamp member connected with the externally splined member and having a radially extending clamp arm disposed such that when the externally splined member is shifted axially of the internally splined member, said arm is caused to simultaneously move axially and rotate about the axis of the externally splined member, means limiting axial movement of the externally splined member relative to the internally splined member in a direction opposite to said one direction and an actuator connected with said externally splined member for shifting the externally splined member in said opposite direction to displace said arm axially and rotate it until the last-mentioned means are effective to arrest relative movement between said splined members and to thereafter shift the two splined members as a unit axially relative to the body and thereby further shift said arm axially in a radially fixed position.

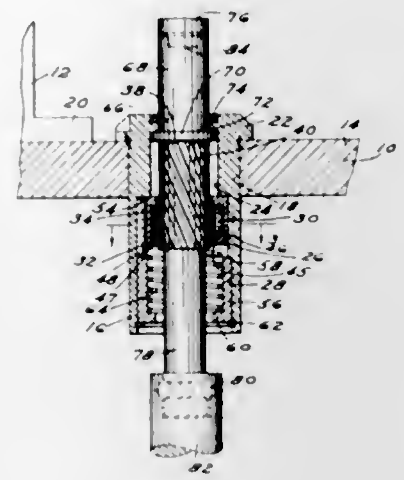

3,397,880
VISE CLAMP
William G. Kuban, Minneapolis, Minn., assignor to Kurt Manufacturing Company, Minneapolis, Minn., a corporation of Minnesota
Filed May 10, 1966, Ser. No. 548,955
5 Claims. (Cl. 269—240)

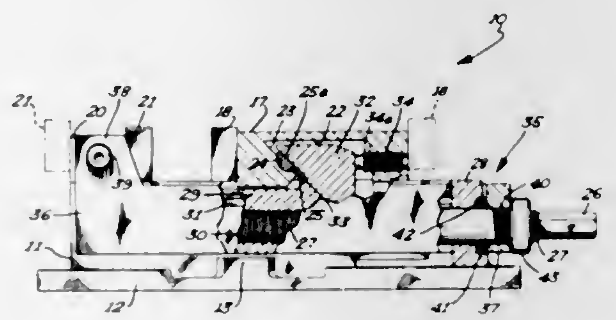

A precision machine vise comprising a body having a fixed jaw rigidly mounted thereon and having a movable jaw slidably mounted thereon for sliding movement toward and away from said fixed jaw. An elongate actuating screw revolvably mounted on said body and an actuating nut threadedly engaging said screw and being movable relative to said body. Said actuating nut having an inclined surface interlocking a complementary inclined surface on said movable jaw. An elongate stress receiving frame structure disposed exteriorly of said body and being connected at one end to said fixed jaw and being connected at its other end to said body. Said stress receiving frame structure being operable to receive reaction forces produced in the fixed jaw and to thereby stabilize the fixed jaw against these reaction forces.

3,397,881
OUTDOOR RECREATIONAL AND PICNICKING STRUCTURE
Henry F. Hedgecock, Rte. 2, Box 77, Trinity, N.C. 27370
Filed July 8, 1965, Ser. No. 470,489
6 Claims. (Cl. 272—33)

A recreational and picnicking structure including a main support column having at its top, a canopy which may be moved about or along the column for adjustment purposes. Sheltered by the canopy are a seat assembly, a table incorporating a cooking grill, and a lazy susan all of which are mounted on the column below

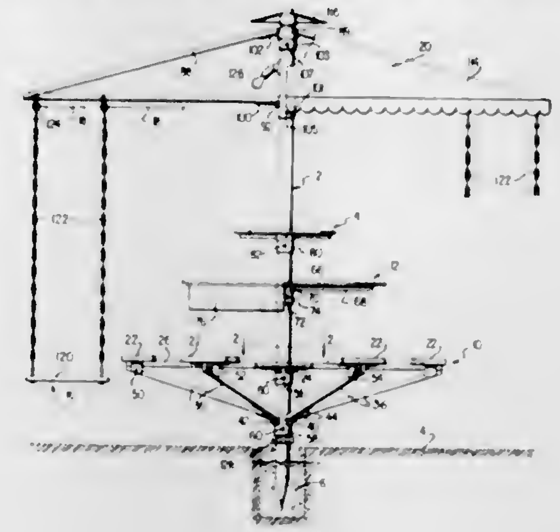

the canopy for rotatable movement as well as axial movement relative to the column. A plurality of play swings are suspended from outer portions of the canopy while clotheslines are strung peripherally on the canopy.

3,397,882
PARALLEL BARS AND CABLE SUPPORT THEREFOR
Richard Reuther, 22 Windhorststrasse, 67 Oppau, Germany
Filed Jan. 26, 1966, Ser. No. 523,157
Claims priority, application Germany, Jan. 29, 1965, R 39,762
2 Claims. (Cl. 272—63)

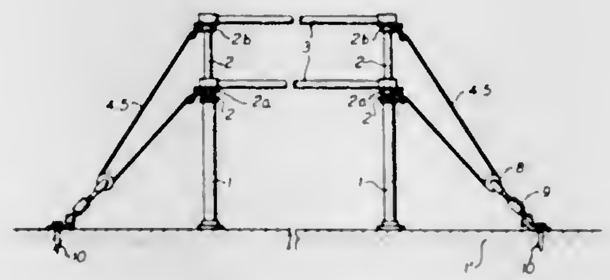

1. Parallel bars, comprising a base, said base having two pairs of stands disposed substantially vertically and spaced apart from each other,
a head secured to the upper end of each of said stands,
a strut connecting the stands of each pair,
a pair of tensioning cables connecting corresponding adjacent heads of said pairs of stands and disposed in lateral direction and beyond the base of said parallel bars, and
a guide means receiving said cables and adapted to be anchored to the floor and providing a turning guide for each of said cables.

3,397,883
MOTORIZED COMBINED INVALID WALKER AND LIFT DEVICE
Mogens Kiehn, Skokie, Ill., assignor to Kiehn Products Company, Chicago, Ill., a corporation of Illinois
Filed Sept. 27, 1965, Ser. No. 490,335
2 Claims. (Cl. 272—70.3)

A motorized combined invalid walker and lift device of the armpit hoist type wherein the armpit lift arms are pivoted to the side bars of a wheeled chassis, are connected to a crossbar, and are actuated by a motorized gear reduction device, the output shaft of which drives a screw hoist connected to the crossbar. The gear reduction

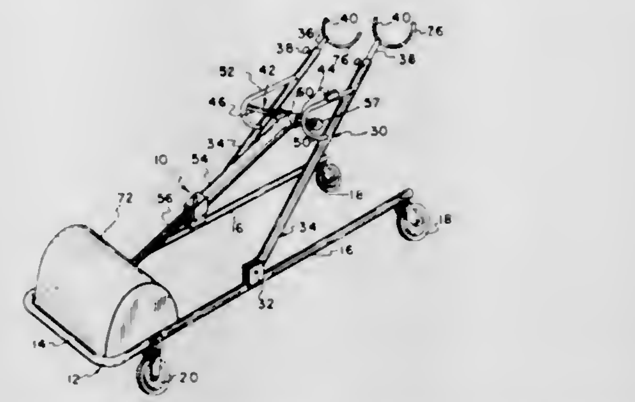

device is pivoted to the chassis for swinging movement about a horizontal axis and the screw hoist is pivoted to the crossbar.

3,397,884
ISOMETRIC EXERCISING AND STRENGTH-TESTING DEVICE
John K. Blasi, 1303 Elm Blvd., Liberal, Kans. 67901
Filed May 21, 1965, Ser. No. 457,561
10 Claims. (Cl. 272—83)

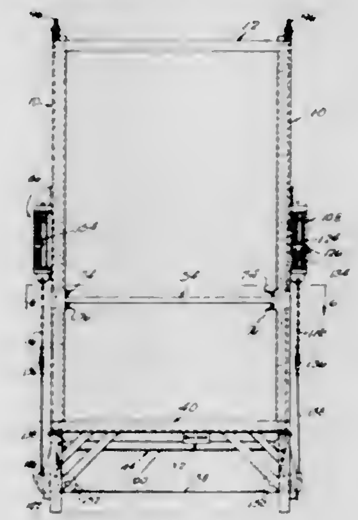

A device for performing isometric exercises and testing the increased strength of the exerciser. A pair of vertical rods adjustably mounts a horizontal cross-bar at its ends, above a stationary platform. The exerciser stands on the rods to the frame enables them to be lifted upwardly upon upward movement of the cross-bar. The lower ends of the rods are connected by a cable system to spring scales mounted on the frame, which are used to measure the amount of force or pull exerted by the exerciser in lifting the rods, against the tension of the springs in the exercises. The rods are normally immobile on a support frame, but the removal of anchoring pins connecting the platform and grasps the bar for performing isometric scales. A second cable system is also provided for insuring that the cross-bar remains horizontal and does not tilt.

3,397,885
SUPPORTING STRUCTURE AND BALL RELEASABLY SUSPENDED THEREFROM
Robert A. Nash, Jr., 3401 Salem Ave., Trenton, Mich. 48183
Filed Oct. 19, 1965, Ser. No. 497,641
7 Claims. (Cl. 273—26)

Ball supporting structure for batting practice or the like, including an inverted L-shaped member having a vertically extending portion adapted to be secured in the

ground in an upright position and a horizontally extending portion to which a linear flexible member is secured which linear flexible member has means for releasably supporting a ball secured to one end thereof is disclosed. The means for releasably supporting a ball from the linear flexible member may be a magnet secured to the linear flexible member cooperable with magnetic means secured to the ball. Alternatively a surface complementary to a portion of the ball surface having a non-drying

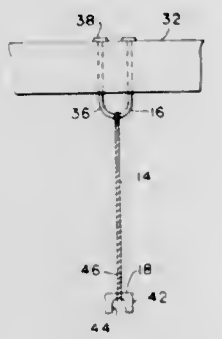

adhesive thereon is provided on a member secured to the linear flexible member. The linear flexible member is in one modification of the invention of a length substantially equal to the periphery of the horizontally extending portion of the L-shaped member at the point of connection thereto of the linear flexible member. The horizontally extending member extends for a substantial distance on both sides of the point of connection thereto of the linear flexible member in this modification of the invention.

3,397,886
SCORE SHEET FOR RECORDING INDIVIDUAL AND COMPOSITE SCORES
Edmund L. Dopieralski, 26 Angelus Drive, Rochester, N.Y. 14622
Filed Dec. 15, 1964, Ser. No. 418,451
10 Claims. (Cl. 273—54)

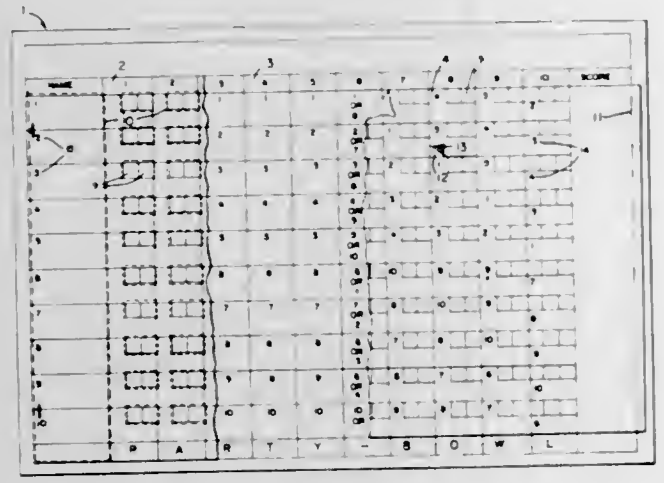

A bowling score sheet assembly having an individual-score sheet with score transfer means on the reverse side of the scoring spaces under the boxes for receiving pin scores, a composite-score sheet and an interposed score-exchange sheet which is located so that the pin scores entered on the individual score sheet are automatically transferred to the pin score boxes of the score-exchange sheet as the scores are entered. The scoring spaces of each vertical column of the score-exchange sheet being removable so that an exchange of pin scores can be made between contestants in transferring scoring boxes to the composite-score sheet.

3,397,887
TETHER BALL
David M. Caplan, Los Alamitos, Calif., assignor to W. J. Voit Rubber Corp., a corporation of California
Continuation of application Ser. No. 13,468, Mar. 8, 1960, which is a division of application Ser. No. 659,616, May 16, 1957. This application Oct. 10, 1963, Ser. No. 315,203
3 Claims. (Cl. 273—58)

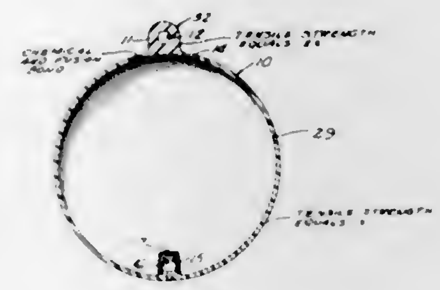

1. A tetherball comprising:
a spherical body portion of a fused polyvinyl chloride material,
a tether hanger extending significantly beyond the surface of said spherical body portion including a loop portion and a flange portion, said loop portion merging into said flange portion and said flange portion extending beyond the base of the loop portion, the hanger comprising a blend of carbon black reinforced nitrile rubber and polyvinyl chloride resin having a greater tensile strength than the tensile strength of said polyvinyl chloride spherical body portion and the hanger being mounted to the spherical body portion of the tetherball by means of a strong chemical and fusion bond securing the flange portion to the spherical body portion, said flange portion thereby distributing the tethering stress over a relatively large circular area of said spherical body portion, and
a valve member integrally mounted to the body portion of the tetherball for inflating said tetherball.

3,397,888
ADJUSTABLE GOLF PUTTER
Donald R. Springer, 7609 NE. Rodney Ave. 97211, and James E. Lyons, Jr., 1600 N. Colfax St. 97217, both of Portland, Oreg.
Filed July 16, 1965, Ser. No. 472,408
5 Claims. (Cl. 273—80.1)

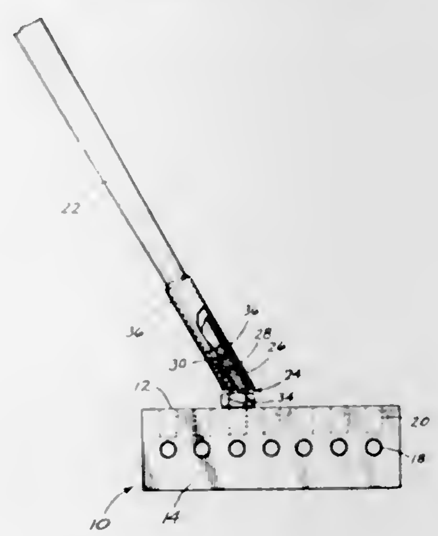

A golf club wherein a threaded shaft can be selectively attached to any one of a series of threaded openings on adjacent side and edge faces of a rectangular club head.

3,397,889
BOWLING PIN WITH WOOD CORE AND FABRIC REINFORCED RESIN COVER
Richard A. Smith, Cornwall on the Hudson, N.Y., assignor to American Machine & Foundry Company, a corporation of New Jersey
Original application Aug. 31, 1960, Ser. No. 53,203, now Patent No. 3,240,646, dated Mar. 15, 1966. Divided and this application Mar. 2, 1965, Ser. No. 436,516
3 Claims. (Cl. 273—82)

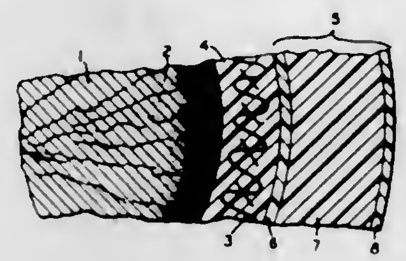

1. A bowling pin comprising a preformed wood body encased in a conformable woven fabric embedded in a solid synthetic resinous material selected from the group consisting of polyurethane resins and epoxy resins which is impregnated into said body and polymerized in situ to an integral structure embodying said fabric.

3,397,890
BOARD GAME APPARATUS FOR SIMULATING STOCK MARKET OPERATIONS
Burton Newton, Clintwood, Va. (434 Smith Road, Columbus, Ohio 43228)
Filed June 2, 1964, Ser. No. 372,058
1 Claim. (Cl. 273—135)

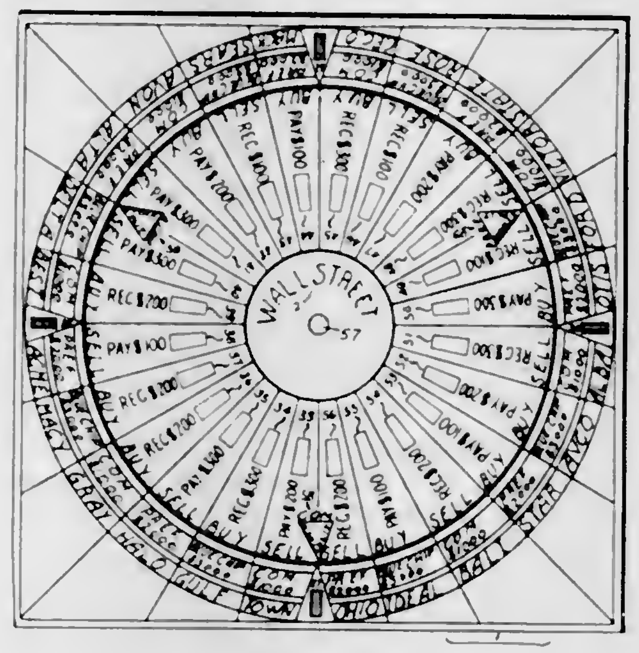

Game apparatus including a game board with a revolvable disc having groups of colored panels with indicia thereon designating amounts a player "pays" or "receives," triangular boxes designated "stock splits" and "buy" or "sell" options; the panels on the revolvable disc being radially aligned with rows of panels on the stationary portion of the game board having indicia designating names of companies and the price of 100 shares of stock; the colored panels being arranged on the disc in an annular series of successive identical groups, each group consisting of a plurality of differently colored panels; the stationary portion of the board having player station indicators coacting with said triangular boxes, the numbers of said boxes and indicators being related so that no more than one box can be indicated in any position of the disc.

3,397,891
DRY-GRIP SLEEVE
Tobias Koch, 149 Friendship Road, Drexel Hill, Pa. 19026
Filed Dec. 18, 1964, Ser. No. 419,436
4 Claims. (Cl. 273—162)

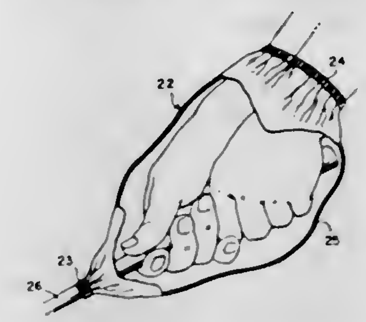

This invention relates to a sleeve for keeping dry the handle of a golf club or the like so as to prevent the handle from getting wet and becoming slippery. It assists the golfer in maintaining a good grip on the club.

3,397,892
GOLF TRAINING AID
Walter A. Stahl, P.O. Box 22, Chagrin Falls, Ohio 44022
Filed July 2, 1965, Ser. No. 469,094
8 Claims. (Cl. 273—190)

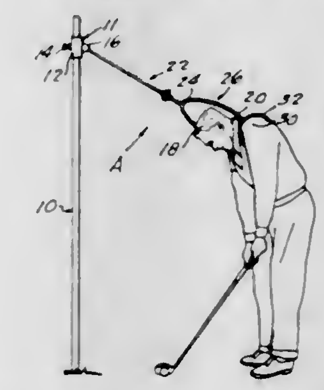

A golf training aid having a rigid positioning rod adjustably secured at one end to a vertical support to extend at an acute angle to the horizontal along a line coinciding with the axis of a golfer's neck. To the other end of the rod, a yoke is connected for rotation about an axis coaxial with the rod. In one embodiment, the yoke has a curved portion extending over the head of the golfer. Each of the two ends of the curved portion has a saddle to engage a shoulder of the golfer.

3,397,893
CYLINDER CONSTRUCTION
Keith W. Kampert, Libertyville, Ill., assignor to International Harvester Company, Chicago, Ill., a corporation of Delaware
Filed Aug. 3, 1966, Ser. No. 570,058
4 Claims. (Cl. 277—24)

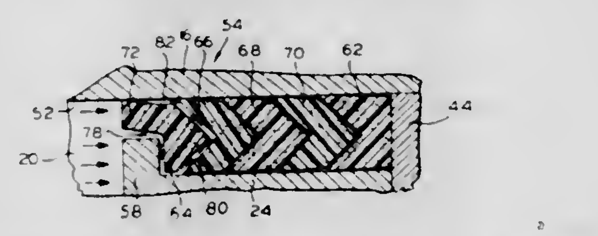

A cylinder construction incorporating a wiper lip on the male adapter of the packing set for a reciprocating hydraulic piston. The construction permits fluid to flow around the male adapter to a location between the lip and cylinder wall during a working stroke of the piston so that the lip is unloaded and wear thereof is reduced.

3,397,894
ROTARY SHAFT SEAL
Otil F. Mastriforte, Newington, and John H. Faulds, Manchester, Conn., assignors to Chandler Evans Inc., West Hartford, Conn., a corporation of Delaware
Continuation of application Ser. No. 425,716, Jan. 15, 1965. This application Jan. 2, 1968, Ser. No. 695,284
3 Claims. (Cl. 277—30)

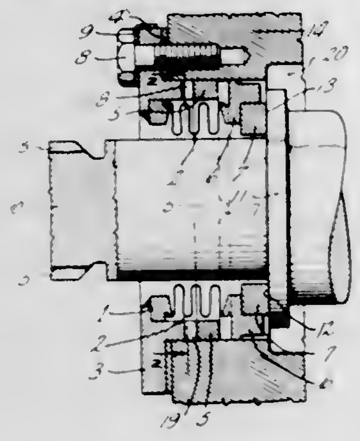

Bellow ends are permanently attached respectively to a face seal structure and a housing end plate through which a shaft protrudes, the bellows urging the seal element away from the end plate and against a flange integral with a segment of the shaft positioned within the housing. A wobble washer circumscribing the bellows transmits aligned or misaligned high axial thrust loads from the flange to the housing end plate thereby preventing distortion of the bellows under high load which would result in fluid leakage past the face seal.

3,397,895
COMBINATION VEHICLE STABILIZER AND FORCE EQUALIZER
Casemiro Alexandre Kuniskis, 5206 S. Campbell St., Chicago, Ill. 60629
Filed Mar. 9, 1967, Ser. No. 621,967
7 Claims. (Cl. 280—6)

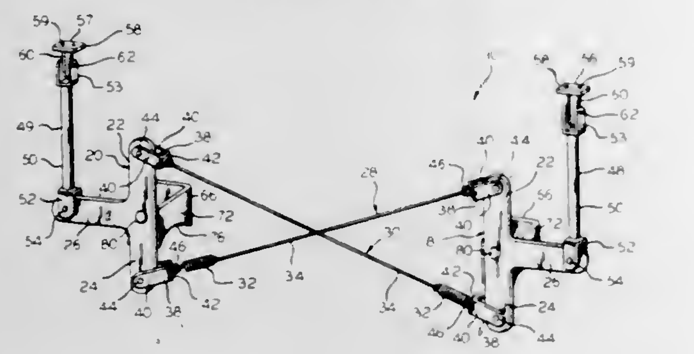

A device which automatically responds to the tendency of either side of a motor vehicle to sway up or down with respect to the opposite side thereof and applies a restraining force to counteract or neutralize the force causing said swaying tendency.

3,397,896
VEHICLE SUSPENSION SYSTEM
Elwood H. Willetts, 102 S. Penataquit Ave., Bay Shore, N.Y. 11706
Filed Apr. 1, 1965, Ser. No. 444,613
8 Claims. (Cl. 280—104.5)

The present invention includes a multiple axle suspension for a vehicle including a frame structure, a support shaft journalled in the frame structure, three axles equally supporting the sprung mass, a suspension beam journalled on the support shaft and articulated within its extremities by torque reactive tubular elastomer means stressed in torsional shear for enabling controlled freedom of vertical movement at transversely opposite ends of the first said axles, and equalizer means connected to said suspension beam and supported by sec-

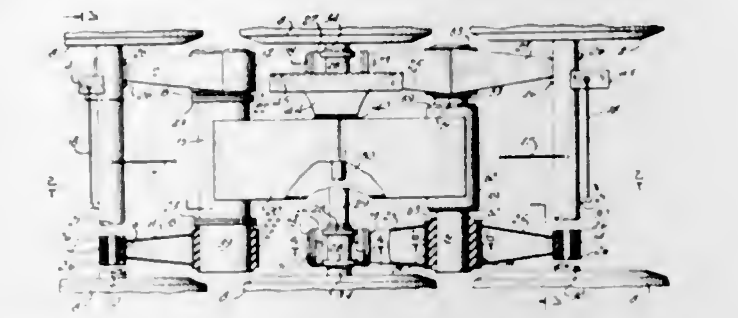

ond and third of said axles for providing cushioning substantially parallel to the frame structure.

3,397,897
COMBINATION SPRING AND SHOCK ABSORBING SUSPENSION UNIT
Harold E. Schultze, Dayton, Ohio, assignor to General Motors Corporation, Detroit, Mich., a corporation of Delaware
Filed Feb. 1, 1966, Ser. No. 524,047
5 Claims. (Cl. 280—124)

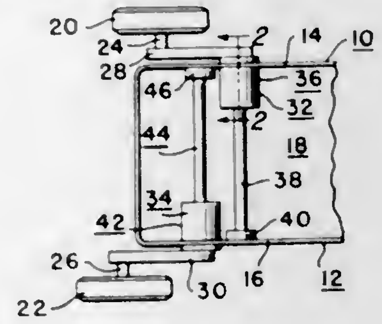

In preferred form, a compact suspension and damping system including a control arm which is connected to a road wheel at one end and a torsion bar and shock absorber assembly at the other end. The torsion bar resiliently supports a sprung mass on the road wheel. Limited rotative movement of the arm is damped by regulated fluid flow in a hydraulic, direct acting piston-cylinder shock absorber surrounding one end of the bar. A ball screw arrangement translates the arm's rotational motion into linear movement of the shock absorber piston to produce a predetermined damping effect.

3,397,898
STABILIZER FOR MOTOR VEHICLE
Omer F. Denney, Fort Madison, Iowa, and Russell D. Page, Decatur, Ill., assignors to Caterpillar Tractor Co., Peoria, Ill., a corporation of California
Filed Feb. 6, 1967, Ser. No. 614,183
3 Claims. (Cl. 280—150)

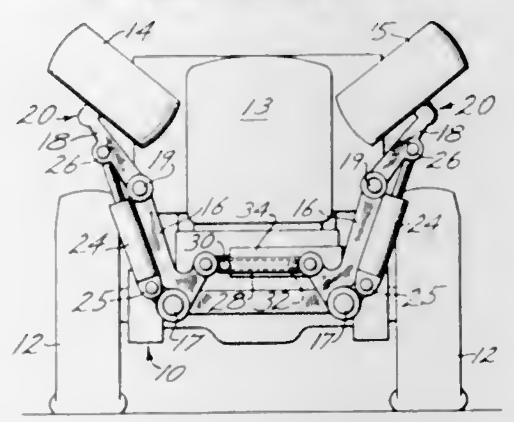

A stabilizing device to prevent the overturning of a vehicle working on a steep incline and including power actuated struts extendible selectively from opposite sides of the vehicle and each having a ground engaging wheel.

3,397,899
FIFTH WHEEL MOUNT
Theodore F. Thompson, 409 E. 12th St., Davenport, Iowa 52803
Filed Sept. 19, 1966, Ser. No. 580,460
2 Claims. (Cl. 280—432)

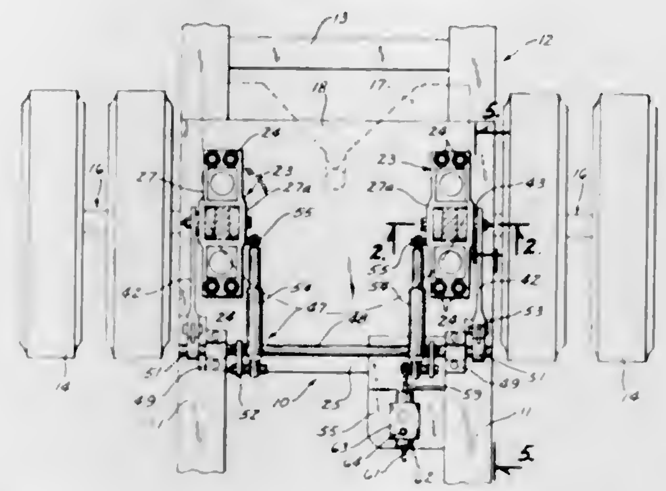

The fifth wheel mounting is for the purpose of automatically braking a semi-trailer in response to tractor braking to prevent the trailer from overriding the tractor. The mounting includes a base plate that is rigidly connected to the top side of the tractor frame for supporting a pair of longitudinally extended mounting brackets arranged in a transversely spaced relation and centered relative to the tractor rear axle assembly. A pair of upright transversely spaced load transfer members for supporting the fifth wheel are pivoted on the mounting brackets for pivotal forward and rearward movement. Each load transfer member has a rearwardly extended operating arm connected thereto that is movable forwardly and rearwardly in response to the pivotal movement of the load transfer members. This movement of the operating arms is transmitted to a combination stabilizing and force equalizing unit carried on the rear section of the base plate and is adapted to operate any conventional type control mechanism for actuating an electric, fluid or mechanical brake system on the trailer.

3,397,900
HITCH FOR VEHICLE
Harold W. Sturges, 500 E. 7th St., Holtville, Calif. 92250
Filed July 12, 1966, Ser. No. 564,597
5 Claims. (Cl. 280—478)

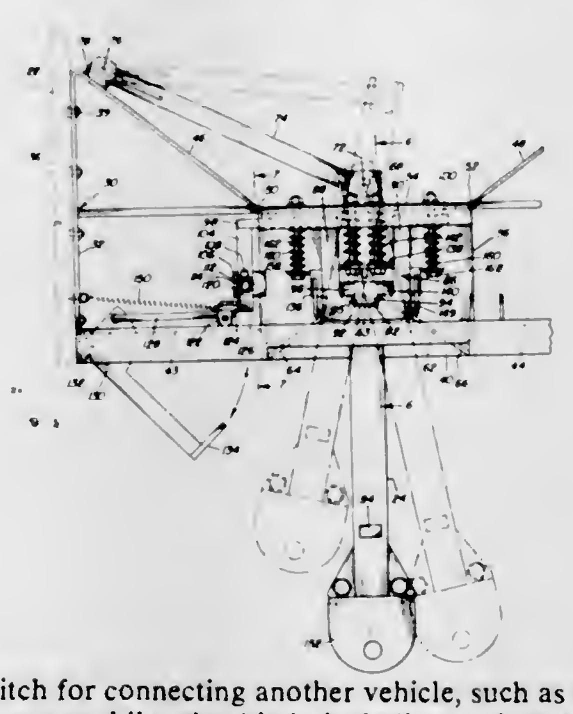

A hitch for connecting another vehicle, such as a trailer, to an automobile, the hitch including a frame secured to the chassis of the pulling vehicle, which frame pivotally supports an extendable and contractable draw bar and a movable latching element. The draw bar carries a cooperating latching element. A retainer holds the latching element in non-latching position and this retainer is rendered ineffective when the draw bar is moved forwardly or the pulling vehicle is moved rearwardly.

3,397,901
BUSHING ASSEMBLY FOR ENGAGING RELATIVELY RIGID CYLINDRICAL BODIES
Harlan J. Larrivee, Rte. 2, Box 2117A, Gig Harbor, Wash. 98335
Continuation-in-part of application Ser. No. 396,562, Sept. 15, 1964. This application Dec. 1, 1966, Ser. No. 598,459
2 Claims. (Cl. 285—161)

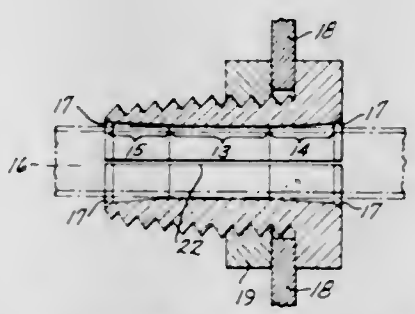

Generally, my invention relates to a bushing assembly for engagement with relatively rigid cylindrical bodies, as tubes or rods, and with predetermined frictional pressure engagement to prevent relative motion in either direction of the bushing assembly as respects the said cylindrical bodies.

3,397,902
APPARATUS FOR SECURING A DRAIN CONDUIT TO A SINK
Ival G. Dutcher, White Bear Lake, Minn., assignor to Whirlpool Corporation, a corporation of Delaware
Filed June 1, 1966, Ser. No. 554,539
1 Claim. (Cl. 285—206)

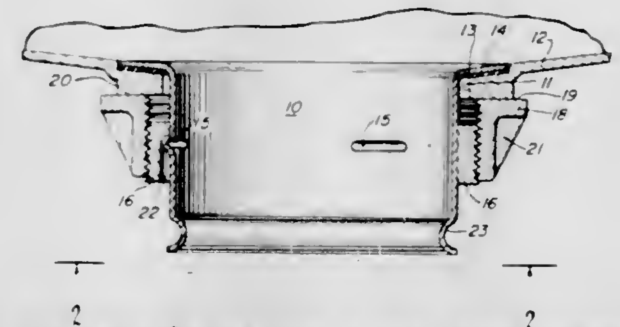

An apparatus for securing a sink drain conduit to a sink at the opening therein so that the conduit extends outwardly from the sink opening. The drain conduit is secured to the sink by a flange on one end of the conduit and by a pair of threaded ring members.

3,397,903
ARTIFICIAL LIMB JOINT
John H. Archdale, 424 S. Charlton St. 61605, and Carl H. Schmidgall, 307 Western St. 61604, both of Peoria, Ill.
Filed June 13, 1966, Ser. No. 557,176
4 Claims. (Cl. 287—101)

1. In a hinge joint for artificial limbs and the like, a pair of shank members, knuckles on one end of the shank members in juxtaposition with each other, one knuckle

having a circular solid body with a central bore therein, the other knuckle having a circular cup-shaped hollow body with a central bore therein, means interposed between the knuckles and coacting with the central bores for hingedly connecting the knuckles whereby one knuckle is adapted to rotate relative to the other knuckle and means for limiting the rotation of said one knuckle; the means for hingedly connecting the knuckles includes

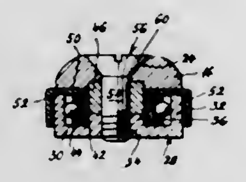

an annular thrust bearing member carrying spaced ball bearings on the outer periphery and mounted in the hollow body of said other knuckle with said ball bearings engaging the inner periphery of said hollow body, the solid body of said one knuckle having a recess in one surface around the bore therein, and a tubular bearing interposed between and pressed in the inner periphery of the annular thrust bearing member and the recess in the solid body of said one knuckle.

3,397,904
CHANNEL MEMBER FIXINGS
Henry Ernest Evans, Slough, England, assignor to N. V. Appleton (U.K.) Limited, Slough, England, a British company
Filed Aug. 5, 1965, Ser. No. 477,487
Claims priority, application Great Britain, Sept. 16. 1964, 37,883/64
5 Claims. (Cl. 287—189.36)

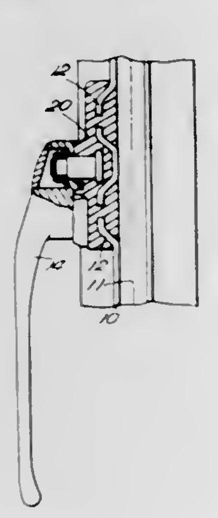

A window frame includes a glazing channel defining between its walls a space for the window glass, at least one lug pressed outwardly from one wall of the channel to leave a recess between the lug and the space for the glass, and an element fixed to the lug by means which enter the recess but which do not project into the space for the glass.

3,397,905
LATCH ASSEMBLY FOR CLOSURE
George Banse, Sterling, Ill., assignor to National Manufacturing Co., Sterling, Ill., a corporation of Illinois
Filed Dec. 15, 1965, Ser. No. 514,089
4 Claims. (Cl. 292—5)

To the door jamb is fastened a strike having a diverging opening in which is pivotally mounted a trip catch with an aperture to accommodate a first padlock. A bar is slidably mounted through the door so that a first end of the bar engages the trip catch when the door is closed. The second end of the bar is formed into a parallelepiped and passes through an aperture in a door handle on the opposite side of the door, an aperture being included in the sec-

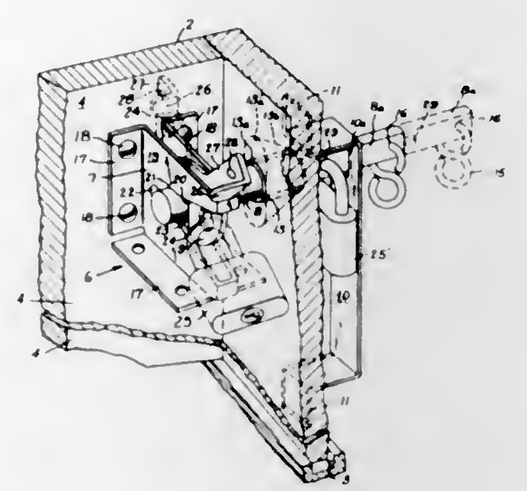

ond end to accommodate a second padlock between the door handle and the body. The parallelepiped is loosely engaged by the door handle so that the bar is pivotable and may accommodate slight misalignment with the strike.

3,397,906
HOOD AND DECK LATCH
Ernest C. Beckman and Benard O. Anderson, Rockford, Ill., assignors to Modern Metal Products Co., Rockford, Ill., a corporation of Illinois
Filed Oct. 15, 1965, Ser. No. 496,349
11 Claims. (Cl. 292—29)

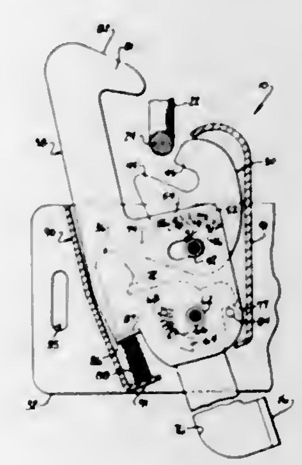

A detent and a latch are pivotally mounted on a plate and each has an arcuate slot located a radial distance from its respective axis. A finger from the plate extends crosswise of each slot. A compression spring is located in each slot between one end and the finger. The latch and detent may be coplanar or oblique to each other. For use as a hood latch, a safety catch is mounted on the detent axis and is operated by the detent.

3,397,907
SLAB HANDLING DEVICE
Clarence David Trowbridge, Valparaiso, Ind., assignor to Inland Steel Company, Chicago, Ill., a corporation of Delaware
Filed Feb. 1, 1967, Ser. No. 613,280
5 Claims. (Cl. 294—81)

Disclosed is a device for handling slabs of metal or other material. The device utilizes a pair of spaced apart lazy tongs characterized by elements which permit parallel movement of the tong jaws, and freedom from structural elements which protrude significantly beyond the width of the gripping jaws regardless of the distance at

which they are apart. The device permits the stacking of slabs into piles very close together since only a small dis-

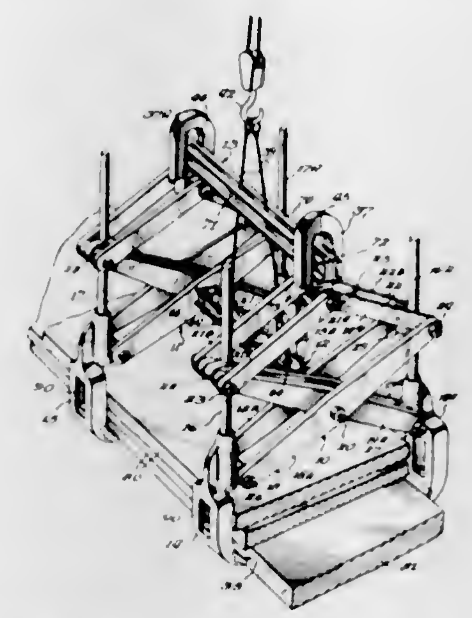

tance between piles is required for the jaws to satisfactorily grip and lift slabs from a pile.

3,397,908
CAMPING TRAILER
William J. Flajole, 20650 Breezewood, Southfield, Mich. 48075
Filed Sept. 1, 1966, Ser. No. 576,665
5 Claims. (Cl. 296—23)

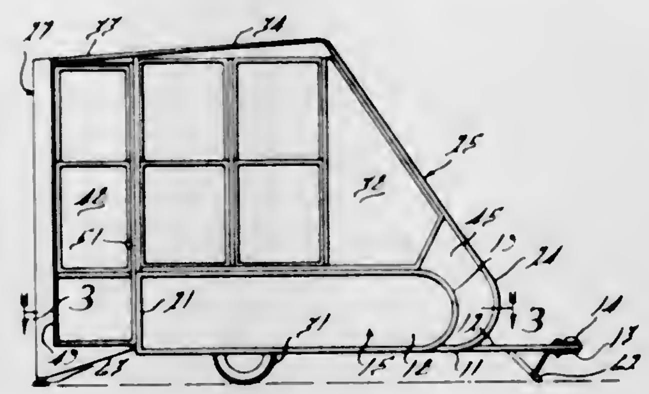

The camping trailer has foldable panels which form the top and end cover portions in trailer and extended camping position. Hinged panels are hingedly connected to the ends of foldable panels to form the roof section of the trailer when in camping position.

3,397,909
CAMPER UNIT STRUCTURE
Jesse E. Gossman, 32000 SW. 187th Ave., Homestead, Fla. 33030
Filed Oct. 18, 1966, Ser. No. 587,592
9 Claims. (Cl. 296—23)

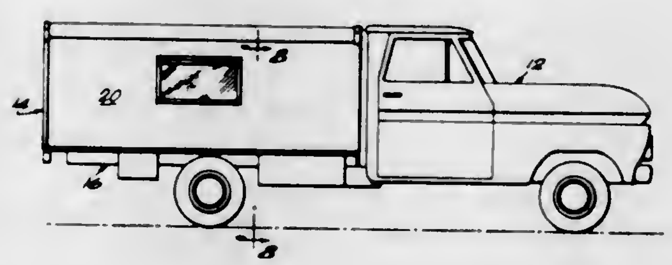

A camper structure comprising an open bottom two section shell type canopy fitting cover an open top box and having telescopic arm means to interconnect the sections to permit lateral and vertical displacement enlarging the canopy and drive means to operate the arms in unison and partial floor means connected between the box and canopy.

3,397,910
LOCK FOR TILTABLE CAB
Werner Schmidt and Hilmar Gunther, Munich, Germany, assignors to Maschinenfabrik Augsburg-Nurnberg Aktiengesellschaft, Munich, Germany
Filed Sept. 6, 1966, Ser. No. 577,249
Claims priority, application Germany, Sept. 9, 1965, M 66,572
1 Claim. (Cl. 296—35)

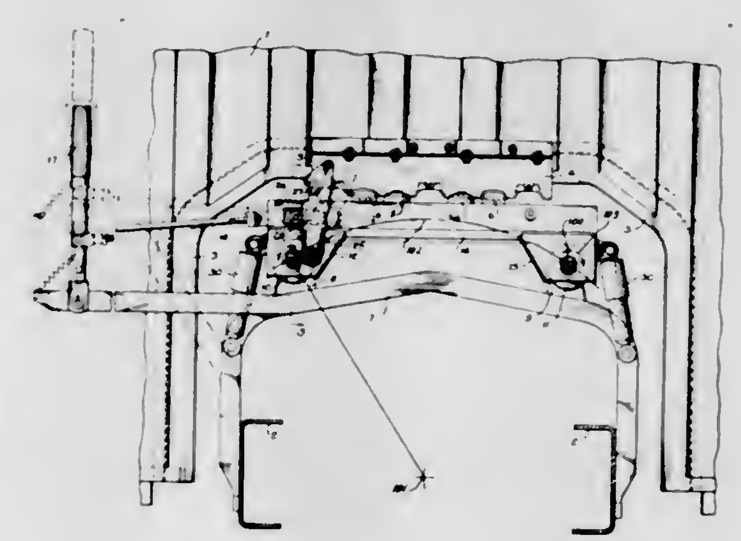

The cabin for a trailer truck has its front end swingable around a spring supported axis extending transversely of the vehicle frame, and its rear end lockable to the frame. The locking mechanism is mounted on rubber circular disc springs whose center axes extend longitudinally of the frame. The disc springs lie on an arc whose center falls on the longitudinal center line of the frame.

3,397,911
AUTOMOTIVE SAFETY DEVICE
Arthur G. Brosius, Sr., 145 St. James Place, Buffalo, N.Y. 14222
Filed Jan. 20, 1964, Ser. No. 338,827
6 Claims. (Cl. 297—216)

1. An antiwhiplash device for mounting on the back rest portion of an automotive vehicle seat comprising a frame member, a head supporting section slidably mounted on said frame member, impact absorbing means form-

ing a part of said head supporting section, spring means for urging said head supporting section to an extended position for providing a shock absorbing abutment for the rear of a person's head, latch means for retaining said head supporting section in a retracted position on said frame against the bias of said spring means, and impact responsive means operatively associated with said latch means for releasing said latch means only in the event of a rear end impact on said vehicle to thereby cause said spring means to move said head supporting section to said extended position.

3,397,912
FLEXIBLE COUPLING FOR A SEAT
Robin Beaufort Bush, 65 Cachet Parkway, R.R. 1, Unionville, Ontario, Canada
Filed June 2, 1965, Ser. No. 460,744
Claims priority, application Great Britain, June 3, 1964, 23,027/64
1 Claim. (Cl. 297—355)

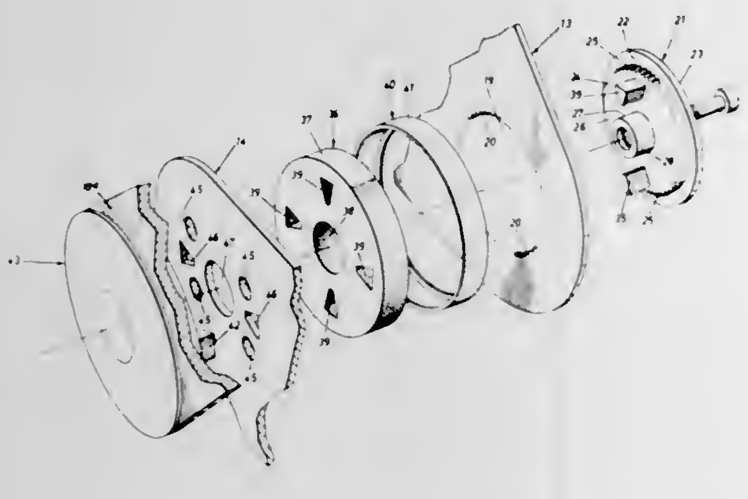

1. In combination with a chair seat, a tiltable back and an overlapping support base comprising a flexible coupling having a first member made of resilient material interposed between said back and support base, said resilient member having two pairs of opposed apertures, a second member removed from said first member and bearing against the face of one of said back and overlapping support base, said second member having extensions traversing the nearest of said back and overlapping support base and engaging one of said pairs of apertures, a third member removed from said first member and bearing against the other of said back and overlapping support base, said third member having extensions traversing the other of said back and overlapping support base and engageable with the other of said pair of apertures, said one of said back and support base having an aperture with peripheral teeth thereon and said second member having a toothed flange engageable with said peripheral teeth to effect adjustable interlocking of said tiltable back and overlapping support base.

3,397,913
DETACHABLE DECORATIVE SEAT BELT COVER
Rolf Alexander Fein, Stonehaven Estate, Rte. 312, Brewster, N.Y. 10509
Continuation of application Ser. No. 450,892, Apr. 26, 1965. This application Jan. 25, 1967, Ser. No. 611,774
7 Claims. (Cl. 297—385)

1. A detachable seat belt cover comprising: a central elongated decorative strip portion; a first retaining strip portion connected to one lateral edge portion of said decorative strip portion; a second retaining strip portion connected to the other lateral edge portion; and detachable fastening means carried by said retaining strip portions for holding said retaining strip portions connected

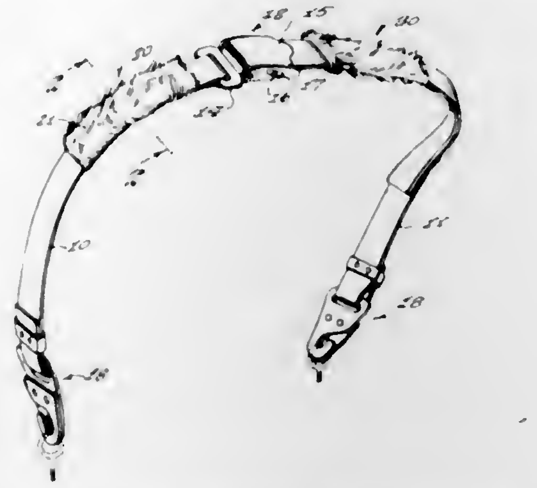

together for laterally surrounding a seat belt to which said cover is applied.

3,397,914
LISTING MATERIAL FOR UPHOLSTERED FURNITURE
William F. Richardson, Carthage, Mo., assignor to Flex-O-Lators, Inc., Carthage, Mo., a corporation, of Missouri
Filed Oct. 31, 1966, Ser. No. 590,751
18 Claims. (Cl. 297—456)

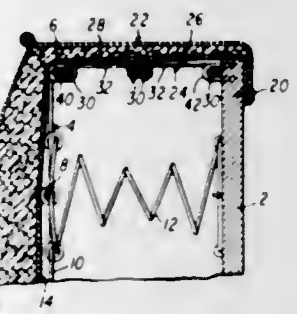

Listing material for upholstered furniture comprising a planar strip adapted to bridge the space between the peripheral edges of the spring deck and the frame in upholstered furniture, said spring deck being resiliently yieldable toward said frame, said listing strip being elongated in a direction parallel to said peripheral edges and divided intermediate its longitudinal edges into two semi-rigid panels, the distal edges of said panels being adapted to be connected respectively to the peripheral edges of said spring deck and said frame, and the contiguous edges of said panels being connected by means preventing their separation, said connecting means being operable to permit relative pivotal movement of said panels about the axis of their connection in one direction from a position in which they are coplanar, but not in the opposite direction, and to permit coplanar relative sliding movement of said panels in a direction at right angles to the axis of their connection.

3,397,915
LONGWALL MINING MACHINE HAVING AUTOMATIC MEANS TO MAINTAIN ANGULAR SETTING
Fred Small, Ormskirk, and Richard Ward, Worsley, England, assignors to Gullick Limited, Wigan, Lancashire, England, a British company
Filed Sept. 16, 1966, Ser. No. 580,063
Claims priority, application Great Britain, Oct. 6, 1965, 42,374/65; Dec. 8, 1965, 51,991/65
10 Claims. (Cl. 299—1)

Guide mechanism for guiding a mineral-mining machine with respect to the mineral seam is provided with

supports which are controlled by inclination sensitive devices to position the guide mechanism in some predetermined plane relative to the mine floor and to retain the

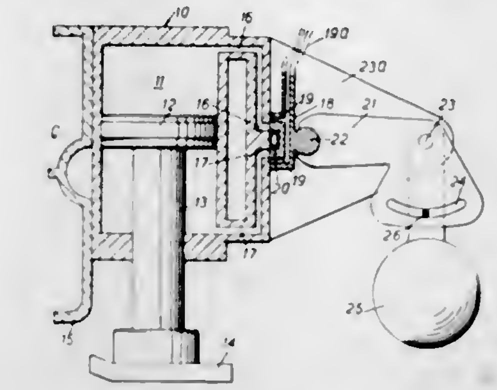

guide mechanism parallel to such plane when the guide mechanism is bodily displaced laterally after a cutting operation to prepare for the next cutting operation.

3,397,916
ROCK CRUSHING APPARATUS
Seiichi Maruta, 45-201 1 chome, Aza-Matsuyama, Kiyose-machi, Kita-Tama-gun, Tokyo, Japan
Filed Dec. 6, 1965, Ser. No. 511,722
Claims priority, application Japan, Dec. 14, 1964, 39/70,637
3 Claims. (Cl. 299—37)

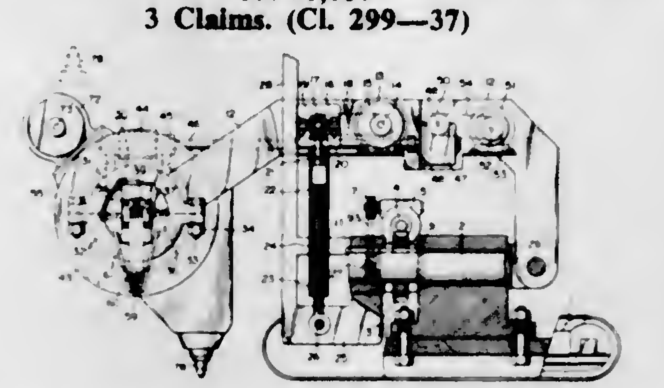

A rock crushing apparatus of the self-running type in which a reaction generated in a moment pressed by a weight hammer is absorbed by means of a centrifugal force due to a turning movement.

3,397,917
VEHICLE WHEEL TRIM
Charles B. Aske, Jr., Birmingham, Mich., assignor, by direct and mesne assignments, to Gar Wood Industries, Inc., a corporation of Michigan
Filed Sept. 6, 1966, Ser. No. 577,494
6 Claims. (Cl. 301—37)

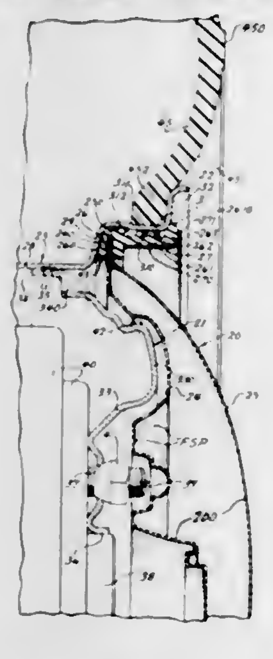

A vehicle wheel trim for conventional vehicle wheels having a drop center wheel rim including an axially extending tire bead seat forming a tire bead seat annulus with an axially inner well therein, said vehicle wheel trim consisting of a wheel cover assembly including an inner relatively high reflectance wheel trim element space with respect to each other except at their radially disposed peripheral flanges where they are secured together, and means mounting said wheel cover assembly to said vehicle wheel including an annular resilient means having a radially inwardly disposed circumferential slot therein receiving the radially disposed axial periphery of said wheel cover assembly supporting and anchoring said wheel cover assembly concentrically in the said tire bead seat annulus of said vehicle wheel.

3,397,918
VEHICLE WHEEL TRIM
Charles B. Aske, Jr., Birmingham, Mich., and Edward L. Wood, Gig Harbor, Wash., assignors to Gar Wood Industries, Inc., a corporation of Michigan
Filed Jan. 4, 1967, Ser. No. 607,235
11 Claims. (Cl. 301—37)

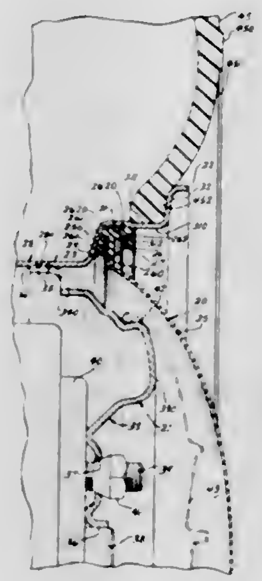

A vehicle wheel cover disposed within the axially outer tire bead seat annulus of the drop center rim of a modern vehicle wheel preferably formed of transparent plastic of selected color, tint and/or reflectivity having a radially extending anchorage flange over which is telescopingly assembled an anular resilient anchorage ring formed to seat preferably within an anchorage recess in said tire bead seat annulus, and an expansible anchorage ring engageable with said annular resilient anchorage ring after the assembly of said wheel cover and said anchorage ring is telescoped to axial refusal within the tire bead seat annulus of said wheel rim whereby to removably secure said vehicle wheel trim concentrically on said vehicle wheel.

3,397,919
VEHICLE WHEEL TRIM
Charles B. Aske, Jr., Birmingham, Mich., assignor, by direct and mesne assignments, to Gar Wood Industries, Inc., a corporation of Michigan
Continuation-in-part of application Ser. No. 502,180, Oct. 22, 1965. This application Aug. 7, 1967, Ser. No. 658,847
1 Claim. (Cl. 301—37)

A vehicle wheel trim construction for conventional drop center rim type vehicle wheels consisting of a plastic or metal wheel cover element and a plastic or metal rim trim wherein the said wheel cover includes a resilient annular locator and cushioning flange disposed around the outer periphery thereof formed and sized to locate the said wheel cover element concentrically within the

tire bead seat annulus of the said drop center rim and in abutment against the outer side wall of the said drop center rim, and wherein the said rim trim element includes a resilient means removably securing the same to a vehicle wheel within the tire bead seat annulus thereof in axially abutting annular contact firmly against the resilient

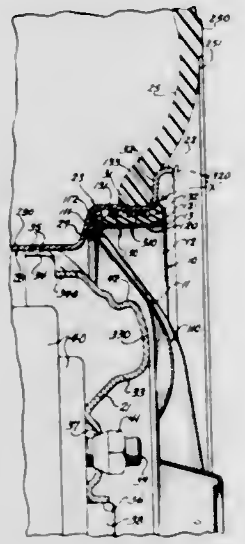

locator and cushioning flange of the wheel cover element, the said rim trim element and its resilient securing means providing the sole means for securing itself and the wheel cover element on said vehicle wheel with the metal or plastic parts disposed in cushioned relationship with respect to each other and the vehicle wheel.

3,397,920
MEANS FOR SECURING VEHICLE WHEEL TRIM TO VEHICLE WHEELS
Charles B. Aske, Jr., Birmingham, Mich., and Edward L. Wood, Gig Harbor, Wash., assignors to Gar Wood Industries, Inc., a corporation of Michigan
Filed Oct. 31, 1967, Ser. No. 679,320
2 Claims. (Cl. 301—37)

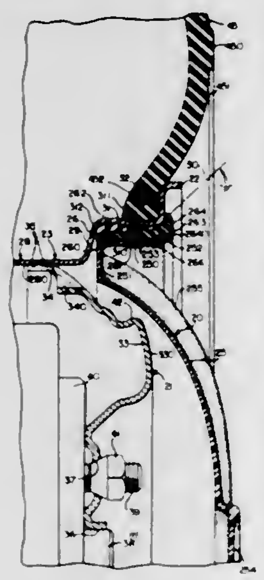

Means for removably securing vehicle wheel trim to drop center rim type vehicle wheels having an axially outwardly disposed tire bead seat annulus wherein a vehicle wheel trim assembly consisting of a plastic or metal wheel trim element having an axially disposed annular anchorage flange over which is positioned a resilient rubber anchorage ring including a plurality of annular radially disposed axially spaced circumferential teeth formed integral therewith and particularly shaped to flex readily and admit of ease in mounting the wheel trim assembly on a vehicle wheel with the toothed portion of the said resilient rubber anchorage ring flexed axially outwardly and disposed in firm resilient engagement with the tire bead seat annulus of said vehicle wheel, the said axially spaced circumferential teeth of the resilient rubber anchorage ring further permitting substantial differentials in expansion and contraction of the flange of said wheel trim element and the vehicle wheel while maintaining the said wheel trim assembly firmly on said vehicle wheel, the said vehicle wheel trim assembly being formed to be initially much more resistant to removal from said vehicle wheel than to mounting it thereon.

3,397,921
VEHICLE WHEEL TRIM
Charles B. Aske, Jr., Birmingham, Mich., assignor, by direct and mesne assignments, to Gar Wood Industries, Inc., a corporation of Michigan
Continuation-in-part of application Ser. No. 590,740, Oct. 31, 1966. This application Feb. 6, 1968, Ser. No. 709,160
24 Claims. (Cl. 301—37)

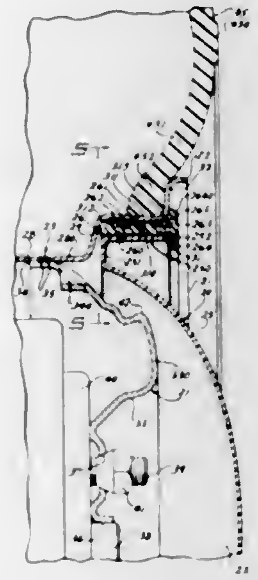

A vehicle wheel trim assembly preferably consisting of a transparent plastic generally dome shaped wheel cover element either clear or of a selected color usable with or without an inner patterned or otherwise ornamented disc preferably of opaque or deeply colored or plated plastic of relatively high reflective qualities, said domed shaped wheel cover element including a peripheral connector flange terminating in an axially outwardly disposed circumferential retainer flange, an annular resilient retainer ring telescopingly assembled on said retainer flange preferably including a plurality of generally radially disposed axially spaced circumferential resilient anchorage teeth on the outer periphery thereof formed to flex axially outwardly when said wheel cover and retainer ring assembly is mounted as on a modern vehicle wheel within the tire bead seat annulus thereof, an axially inwardly facing annular seat formed in said connector flange of said wheel cover element, said inner patterned ornamental reflective disc having a peripheral flange disposed on said annular seat of said connector flange, said reflective disc being formed otherwise for disposition in spaced relationship with respect to said domed shaped wheel cover element and said vehicle wheel, and means either removably or fixedly retaining said inner patterned ornamental wheel trim disc at its outer peripheral flange on said annular seat formed in said connector flange. Said plastic vehicle wheel trim assembly further including means compensating for differentials in expansion and contraction of the plastic of which the vehicle wheel trim assembly is formed and the metal vehicle wheel upon which the said plastic vehicle wheel trim is mounted.

3,397,922
CIGARETTE PACKAGING MACHINERY
George Dearsley, Richmond, Va., assignor to American Machine & Foundry Company, a corporation of New Jersey
Filed Aug. 4, 1966, Ser. No. 574,882
Claims priority, application Great Britain, Aug. 11, 1965, 34,341/65
28 Claims. (Cl. 302—2)

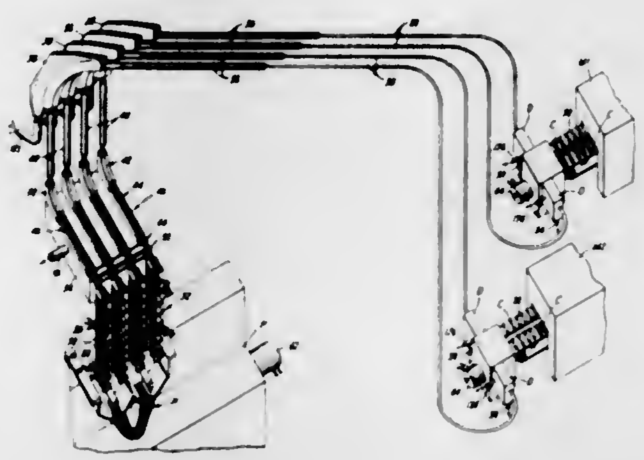

1. A method of conveying cigarettes comprising moving the cigarettes along a path in two streams with similar ends of the cigarettes in the streams adjacent each other, resulting from the manufacture of filter tipped cigarettes, towards a pair of oppositely facing dispensing devices, the longitudinal axes of the cigarettes being transverse to said path, moving the cigarettes of each stream one by one along their longitudinal axes into respective chambers within said dispensing devices, and introducing the cigarettes into and along delivery tubes connected respectively with said devices by means of respective air flows directed through said chambers, said delivery tubes being arranged to guide said streams of cigarettes first away from each other and then in the same general direction of travel with the similar ends of the cigarettes leading.

3,397,923
FORAGE BLOWER MOUNTING STRUCTURE
Thomas J. Scarnato, Park Ridge, and Robert Sorensen and James J. Dryan, Chicago, and Craig M. Lawler, Downers Grove, Ill., assignors to International Harvester Company, Chicago, Ill., a corporation of Delaware
Filed Oct. 20, 1966, Ser. No. 588,190
6 Claims. (Cl. 302—37)

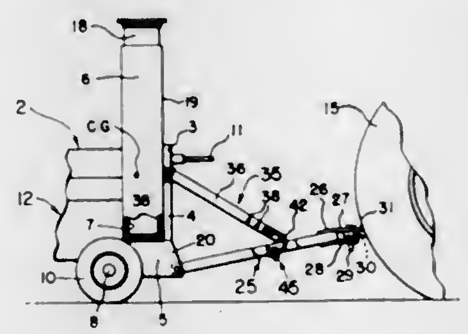

A forage blower mounting structure having a draft frame pivoted to the blower structure on a generally horizontal transverse axis, a diagonal adjusting and positioning and supporting strut pivoted on a horizontal axis to the blower structure above the aforesaid axis, and a spring assembly connecting the other end of the strut to the draft frame at a point ahead of the first mentioned axis.

3,397,924
FLUID PRESSURE BRAKE SYSTEM
Robert C. Lederer, Concord, Calif., assignor to Bendix-Westinghouse Automotive Air Brake Company, Elyria, Ohio, a corporation of Delaware
Filed Nov. 15, 1965, Ser. No. 507,907
5 Claims. (Cl. 303—13)

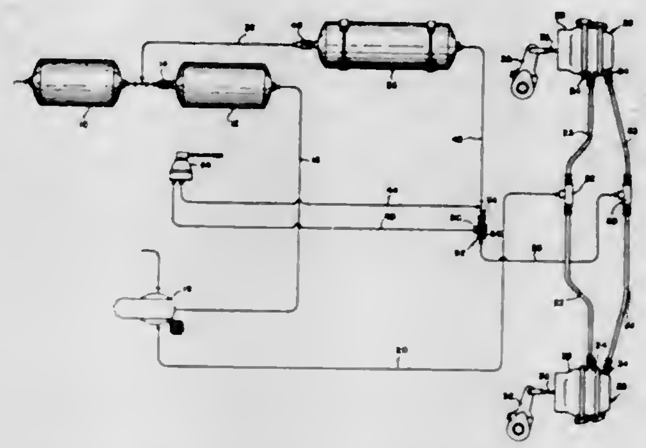

5. A fluid pressure system comprising a fluid pressure source and a fluid pressure responsive motor, means for selectively applying fluid pressure from said source to said motor and exhausting the applied fluid pressure from said motor, valve means between said last named means and said motor movable between one position permitting the flow of applied and exhausted fluid pressure to and from said motor, respectively, and another position obviating the exhaustion of the applied fluid pressure from said motor, and other means responsive to a fluid pressure at said source in excess of a predetermined value to move said valve means toward its one position and also responsive to fluid pressure at said source less than the predetermined value to permit movement of said valve means toward its other position.

3,397,925
TRACTOR PROTECTION VALVE ASSEMBLY
Harold L. Dobrikin, Highland Park, Ill., assignor to Berg Mfg. & Sales Co., Des Plaines, Ill., a corporation of Illinois
Filed June 24, 1966, Ser. No. 560,188
1 Claim. (Cl. 303—29)

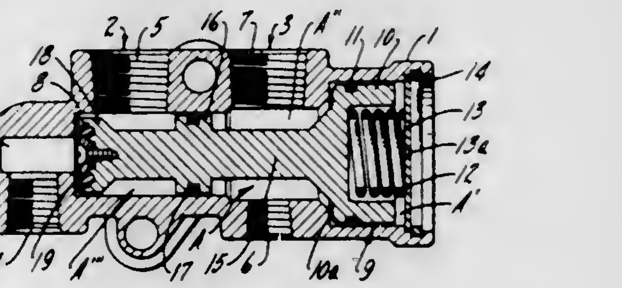

1. A tractor protection valve assembly including a housing, an elongated chamber in said housing, said chamber having an enlarged end portion, a piston member having a piston portion reciprocal in said enlarged chamber portion, said piston member having a reduced, shaftlike extension extending through substantially the entire remainder of said chamber, said extension having a diameter less than that of said chamber remainder, an enlargement intermediate the ends of said extension, a seal carried by said enlargement and engaging an intermediate portion of the wall of said chamber remainder to divide the same into a first and a second chamber remainder portion, an emergency fluid pressure inlet communicating with said first remainder portion, an emergency fluid pressure outlet communicating with said first

remainder portion and with said emergency fluid pressure inlet at all positions of said piston member, said piston portion being subject to emergency fluid pressure in said first remainder portion at all positions of said piston member, a valve member carried at the distal end of said extension beyond said intermediate extension enlargement, a service fluid pressure inlet formed in the end wall of said second remainder portion, said valve member being positioned to close said service fluid pressure inlet when said piston member is in one position, a service fluid pressure outlet communicating with said second remainder portion, yielding means engaging said piston portion and housing to urge said piston member toward said one position, said piston member being urged in the opposite direction by emergency fluid pressure above a predetermined amount in said first remainder portion to unseat said valve member and open communication between said service fluid pressure inlet and service fluid pressure outlet through said second remainder portion, said piston portion having a diameter substantially greater than those of said enlargement and said valve member.

3,397,926
HANDLE CONSTRUCTION
John P. Greene, Mountain Lakes, N.J., and Willis Lee Stewart, Suffern, N.Y., assignors to H & G Industries, Inc., a corporation of New York
Filed Jan. 4, 1965, Ser. No. 422,994
1 Claim. (Cl. 306—30)

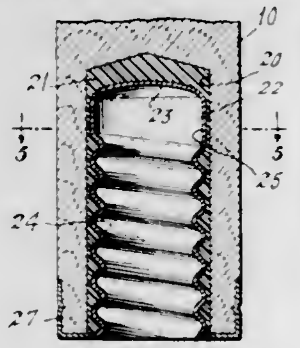

A handle has an elongated cylindrical bore extending thereinto from one end, an externally threaded sleeve in the bore and cement in said bore surrounding said sleeve throughout its length, the inner end portion of the sleeve being cylindrical and extending beyond the threads providing for the holding of the sleeve against both longitudinal movement and rotation in the bore.

3,397,927
STAR BEARING
John S. Oles, 15035 Prevost St., Detroit, Mich. 48227
Filed Oct. 24, 1965, Ser. No. 504,628
4 Claims. (Cl. 308—2)

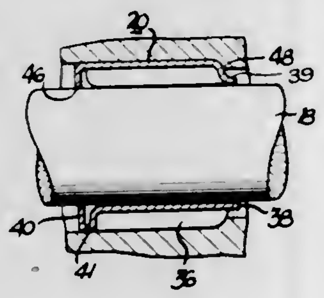

The disclosure includes a star bearing for use on a shaft in an automobile exhaust heat regulator valve. The bearing includes a circumferentially uninterrupted cylinder having axially extended corrugations which are closed on one end by a reduced diameter horizontally extending band to provide a running fit with a shaft to restrict or eliminate the passage of impurities into the interior of the bearing and to come in contact with the shaft. The corrugations are closed on the other end of the bearing by an inwardly directed flange to provide a lubricant space in the interior of the bearing and to keep out foreign matter. The outer portions of the corrugations are spaced apart from one end to the other to provide open spaces therebetween and a space around said reduced diameter band while the inner surfaces of the corrugations serve as scrapers and bearings for the shaft.

3,397,928
SEAL MEANS FOR DRILL BIT BEARINGS
Edward M. Galle, 814 Elton, Houston, Tex. 77034
Filed Nov. 8, 1965, Ser. No. 506,654
11 Claims. (Cl. 308—8.2)

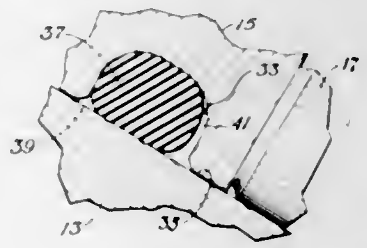

1. Seal means for drill bit bearings, said seal means comprising: a shaft rigidly secured to a drill bit body and having a bearing surface formed thereon; a cutter element rotatably mounted to said shaft and having a bearing surface thereon that opposes and engages the bearing surface on said shaft, one of said surfaces having a circumferential groove therein; and a resilient packing ring positioned within said groove, with said packing ring, said groove and an opposing surface being sized such that upon assembly of the cutter element upon the shaft the cross sectional thickness of said ring is compressed by not less than substantially ten percent of its thickness prior to assembly of the cutter element upon the shaft.

3,397,929
REMOVABLE BEARINGS
Merrion D. Gill and Eugene G. Bezgela, Raleigh, N.C., assignors to Westinghouse Electric Corporation, Pittsburgh, Pa., a corporation of Pennsylvania
Filed June 22, 1964, Ser. No. 376,940
9 Claims. (Cl. 308—10)

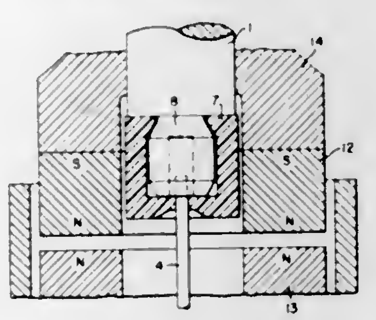

A bearing assembly includes a stator unit and a rotor unit mounted for relative rotation. The mounting includes a cylindrical member or pin on one unit which is journaled within a plastic such as a crystallized acetal resin available under the trade name "Delrin." The plastic is in the form of a cup which is snapped over a bulbous projection on the other unit.

3,397,930
JOURNAL GUIDE MEANS FOR RAILWAY CAR JOURNAL BOXES
Theodore J. Sweger, Naperville, Ill., assignor to Illinois Railway Equipment Company, Chicago, Ill., a corporation of Illinois
Filed Mar. 18, 1966, Ser. No. 535,515
8 Claims. (Cl. 308—41)

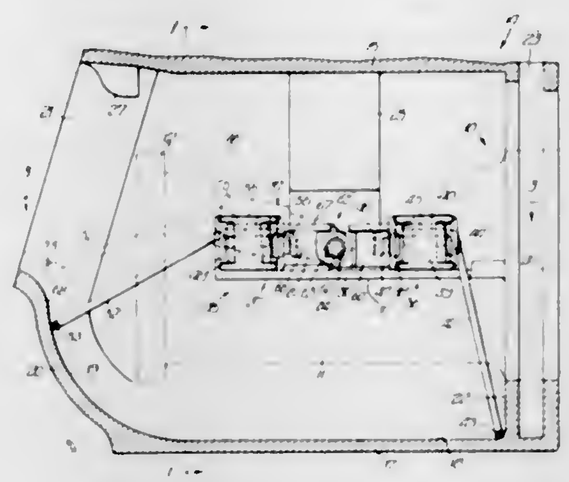

A pair of articulated guide members is provided on each side of an axle journal in a railway car journal box with individual spring wire supports for the pairs of opposite guide members.

3,397,931
SLIDE BEARING
Paul J. W. H. M. Bongers, Beek, Limburg, Netherlands, assignor to Stamicarbon N.V., Heerlen, Netherlands
Filed June 29, 1966, Ser. No. 561,546
Claims priority, application Netherlands, June 30, 1965, 6508371
7 Claims. (Cl. 308—141)

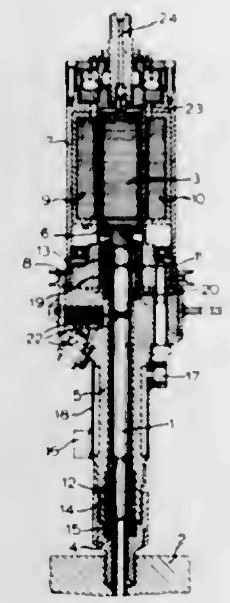

The bearing assembly includes a slide bearing for a shaft provided with a cup-shaped surface for centering the shaft and a fixed cylindrical supporting surface around the shaft with so much clearance that it does not serve as a running surface when the shaft is centered so that in normal smooth operation the supporting surface will not wear. The supporting surface allows the shaft to be only slightly eccentric. If the shaft is eccentric, the supporting surface is temporarily loaded and the cup-shaped surface provides for a rapid centering of the shaft.

3,397,932
SEMI-LINEAR BALL BEARING
William W. Anderson, Jr., Newport News, Va., assignor to the United States of America as represented by the Administrator of the National Aeronautics and Space Administration
Filed June 2, 1966, Ser. No. 554,897
7 Claims. (Cl. 308—176)

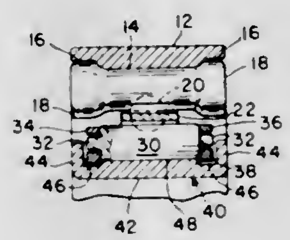

A frictionless bearing having inner and outer sets of rollers engaged with inner and outer races, and including interspersed balls, the balls providing free-rolling translation between the races by rolling movement along the roller sides.

3,397,933
MOUNTING FOR SOIL TILLING DISC
John C. Hatcher, Charlotte, N.C., assignor to Cole Manufacturing Company, Charlotte, N.C., a corporation of North Carolina
Filed Jan. 28, 1966, Ser. No. 523,665
4 Claims. (Cl. 308—181)

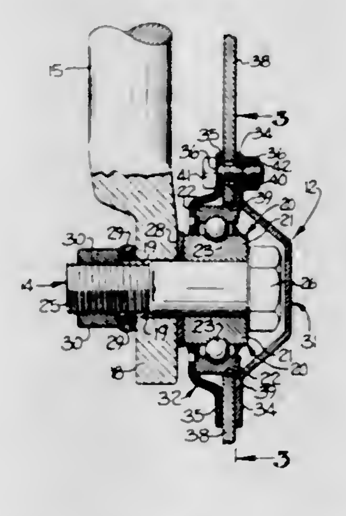

1. An agricultural soil tilling implement mounting comprising:
- a shaft defining an axis of rotation,
- bearing means having an inner race mounted on said shaft and an outer race freely rotatable about said axis,
- bearing flange means engaging said outer race and extending radially therebeyond,
- said tilling disc means supported by said outer race and said flange means for rotation therewith about said axis during tilling operations, and
- fastener means penetrating said flange means and said disc means radially outwardly of said outer race and extending generally parallel to said axis, said fastener means securing said flange means and disc means together,
- said outer race normally being spaced radially from said disc means a first radial clearance distance and said fastener means being spaced radially from said disc means a second radial clearance distance always greater than said first distance so that said fastener means is protected against shear stress due to loads

imposed radially on said disc means and so that abnormal impact loads imposed radially on said disc means during tilling operations are transmitted directly to said outer race by radial contact of said disc means therewith.

3,397,934
CABINET INCLUDING VERTICALLY ADJUSTABLE SHELF SUPPORTS
Charles D. Dushek, Lisle, Ill., assignor to General Electric Company, a corporation of New York
Filed May 24, 1967, Ser. No. 641,037
6 Claims. (Cl. 312—351)

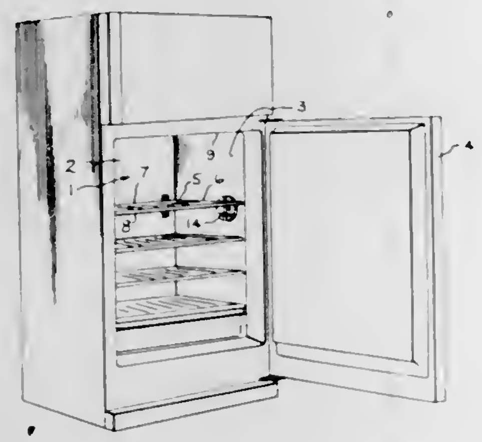

A cabinet including a storage compartment containing a shelf and a vertically adjutable shelf support structure comprising a disk-shaped member rotatable about a horizontal axis extending through the member and having a plurality of shelf-receiving slots spaced at graduated distances from the axis.

3,397,935
LIQUID CUP AND CONTAINER ASSEMBLY USABLE AS A BINOCULAR TELESCOPE
Michitoshi Natsume, 90 3-chome Tamagawa-Okusawa-cho, Setagaya-ku, Tokyo, Japan
Filed Aug. 30, 1965, Ser. No. 483,768
Claims priority, application Japan, Oct. 5, 1964, 39/56,598
1 Claim. (Cl. 350—71)

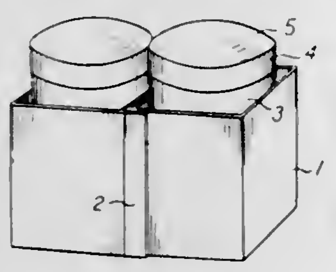

An assembly of two cups each of which is capable of holding liquid is usable as a binocular. Each cup includes a tumbler shaped bottom portion with a lens in the bottom and a cover portion with the lens in the top of the cover. The lenses of the bottom and cover form a telescopic lens system when the cover is on the bottom tumbler portion. The cups are supported in containers each approximately square in section and a flexible hinge connects the containers so that they may be flush with each other along one side or may be pivoted outwardly along an axis parallel with the axis of the cup in order to form a binocular which is inexpensive and lightweight and which may previously have been used to hold liquid.

3,397,936
STANDING WAVE ULTRASONIC LIGHT CELL MODULATOR
John G. Frayne, Pasadena, and Harry P. Brueggemann, San Marino, Calif., assignors to The Marquardt Corporation, Van Nuys, Calif., a corporation of California
Filed Nov. 15, 1963, Ser. No. 324,045
6 Claims. (Cl. 350—161)

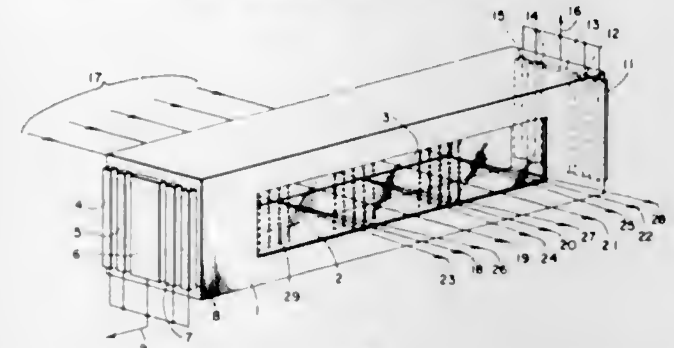

A cell containing a liquid is located transversely of a path of radiant energy and acoustical energy is transmitted through the liquid from two opposed sources to produce a standing wave pattern in the liquid due to cavitation therein to diffract the radiant energy.

3,397,937
STOP-FRAME MECHANISM FOR A MOTION PICTURE PROJECTOR
Clarence O. Schrader, Los Angeles, Calif., assignor to Technicolor Inc., a corporation of Delaware
Filed June 7, 1965, Ser. No. 461,894
15 Claims. (Cl. 352—169)

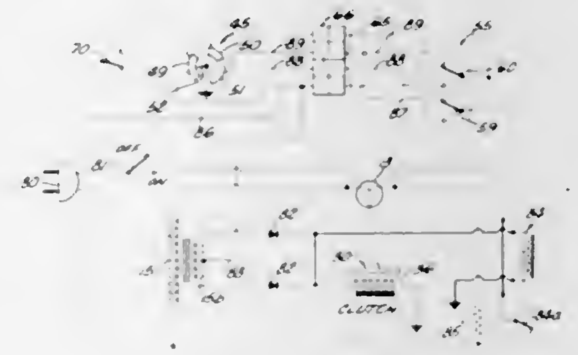

A motion picture projector having apparatus for selective stop-frame and single frame advance operation including a clutch-brake device through which the film advance and shutter is driven and a rotary switch coupled to the shutter for causing the brake to be applied to stop the shutter only in an open position, and switches for activating the clutch-brake device both manually and in response to a cue on the motion picture film.

3,397,938
ABSORBENT NIB WRITING DEVICE
David Juelss, Brooklyn, N.Y., assignor, by mesne assignments, to Walter E. Heller & Company, Inc., New York, N.Y., a corporation of Delaware
Filed Feb. 8, 1966, Ser. No. 525,993
2 Claims. (Cl. 401—198)

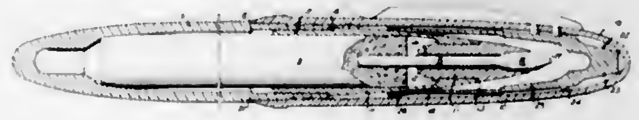

This invention is directed to a marking pen in which the tapered tip section of the barrel is fitted with a snap-in nib-containing adapter positioned within an axial bore of the tip and is provided with an annular shoulder intermediate its ends, abutting the end of the tip section, and a shallow compressible annular bead that abuts an internal annular shoulder of the tip to lock the nib adapter in place. A threaded cap covers the nib end of the pen and serves as an outer seal, while a deep skirted thin-walled internal fitting carried within the cap is frictionally engaged over the tip section to form an inner seal.

3,397,939
MARKING INSTRUMENT
Hollis M. Berry, Lakeville, Mass., assignor to The Carter's Ink Company, Cambridge, Mass., a corporation of Massachusetts
Filed Sept. 14, 1966, Ser. No. 579,388
10 Claims. (Cl. 401—198)

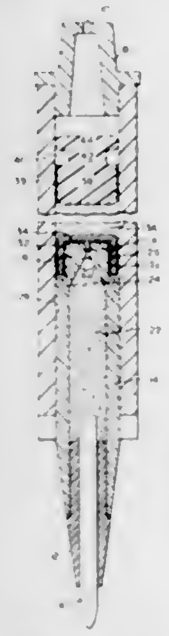

The invention is a marking instrument of the type having a porous nib, the inner end of which contacts a porous ink-saturated filler in the barrel of the writing instrument. A metering valve is provided in the barrel between a reservoir of liquid ink and the filler for measuring and controlling the flow of liquid ink to the filler. The metering valve is a molded structure so shaped that a volume of air is trapped in the valve at atmospheric pressure to create a balanced fluid system, resulting in an air check offsetting the hydrostatic pressure of the ink in the filler and reducing the flow of ink through the valve to zero. Flow of ink from the writing tip, when in use, permits the entrapped air to expand into the filter, thus dropping its pressure and permitting flow of ink through the passageway to the filler to replenish the latter's absorbed ink supply.

3,397,940
OIL BURNER, MORE PARTICULARLY FOR CONTINUOUS-FLOW HEATERS
Ernst Keppel, Remscheid, Germany, assignor to Joh. Vaillant KG, Remscheid, Germany
Filed Oct. 18, 1966, Ser. No. 587,610
Claims priority, application Germany, Oct. 26, 1965, V 29,604
9 Claims. (Cl. 431—28)

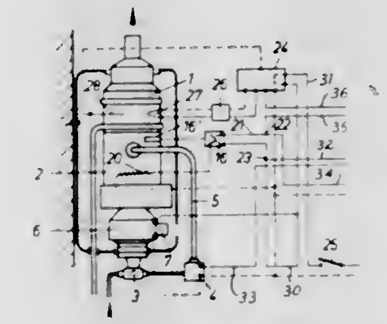

A fuel oil gasification burner has a fresh air intake valve comprising a flap mounted on a shaft for rotation thereabout. The shaft is spring loaded to the valve closed position and an electric servomotor connects to the shaft to open the valve when the servomotor is energized. A solenoid valve is connected in the oil line between the oil pump and the burner. A thermostat is positioned to measure the temperature in the burner. The air valve shaft has a cam which actuates two electric switches, one being closed when the air valve is partially open and remaining closed as the air valve moves to the fully opened position. The second electric switch is normally closed and is opened after the air valve moves to the fully open position. An electric ignition device is provided. The electric circuitry is such that when electric power is provided and the burner is cold, a burner heater commences operating. The thermostat turns on the servomotor after the burner temperature has been raised to a given temperature to commence opening the air valve. When the air valve has partially opened the first electric switch closes to open the solenoid fuel valve. When the air valve has fully opened the second switch opens to shut off the electric ignition device.

CHEMICAL

3,397,941
RETANNAGE OF LEATHER WITH MELAMINE, DICYANDIAMIDE AND ALDEHYDE CONDENSATE REACTED WITH A LOW MOLECULAR AROMATIC SULFONATE
Rudi Heyden and Jürgen Plapper, Dusseldorf, Germany, assignors to Böhme Fettchemie GmbH, Dusseldorf, Germany, a corporation of Germany
No Drawing. Original application Mar. 21, 1961, Ser. No. 96,659, now Patent No. 3,206,435, dated Sept. 14, 1965. Divided and this application Nov. 16, 1964, Ser. No. 417,251
Claims priority, application Germany, Mar. 22, 1960, B 57,150
6 Claims. (Cl. 8—94.24)

Applicants retan chrome tanned hides and other leathers with a syntan made by condensing (1) .4 to .65 mols of melamine, (2) .35 to .60 mols of dicyandiamide and 2.5 to 4.5 mols of a lower aliphatic acid, e.g. formaldehyde or acetaldehyde.

The melamine, dicyandiamide and aldehyde are heated to 50–100° C. for ½ to 3 hours and then mixed with an alkali metal salt of a low molecular aromatic sulfonic acid, e.g. sulfonic acids of benzene, phenol, dihydroxy-diphenylmethane and dihydroxy-diphenylsulfones. The product is dried after the sulfonate is added.

Other aminoplast forming agents, e.g. urea and cyanamide are used with or as partial replacements of melamine and dicyandiamide agents obtained by preparing mixed condensates of dicyandiamide and melamine with an aldehyde and neutral salts of organic sulfonic acids.

3,397,942
ANTIFELTING PROCESS FOR KERATINOUS MATERIALS
Claude Renault, Antony, France, assignor to Compagnie de Saint-Gobain, Neuilly-sur-Seine, France
No Drawing. Filed Aug. 28, 1964, Ser. No. 392,900
Claims priority, application France, Sept. 10, 1963, 947,061
14 Claims. (Cl. 8—127.6)

1. A method of preventing the felting and shrinking of keratinous materials which comprises soaking the keratinous material with an aqueous solution of an alkali

metal salt of dichloroisocyanuric acid and a metal permanganate at neutral to alkaline pH.

3,397,943
TREATMENT OF KERATINOUS MATERIALS
Claude Renault, Antony, France, assignor to Produits Chimiques Pechiney Saint-Gobain, Paris, France
No Drawing. Filed Aug. 28, 1964, Ser. No. 392,940
Claims priority, application France, Sept. 20, 1963, 948,185
10 Claims. (Cl. 8—127.6)

1. A method of treating keratinous materials to reduce felting and shrinking which comprises immersing the keratinous material in a substantially neutral, aqueous bath containing at least one alkali metal salt of dichloroisocyanuric acid, acidifying the bath before the treatment is complete and while the bath contains active chlorine, and completing the treatment in the acid bath.

3,397,944
DEPOSITION OF ALKALINE MATERIAL ON VISCOSE-FLUOROETHYLENE FIBERS PRIOR TO SINTERING
Hideji Kitagawa, Shigenobu Kinoshita, and Hiroshi Uchiyama, Ohtsu-shi, Shiga-ken, Japan, assignors to Toyo Rayon Kabushiki Kaisha, Tokyo, Japan, a corporation of Japan
No Drawing. Filed Jan. 15, 1964, Ser. No. 337,730
Claims priority, application Japan, Feb. 7, 1963, 38/4,825; May 8, 1963, 38/23,523
4 Claims. (Cl. 8—137.5)

In a process for the production of fibers of fluoroethylene resin wherein a yarn is spun from a mixture containing a viscose matrix and an emulsion of said fluoroethylene resin and the mixture is thoroughly purified by washing to reduce the amounts of residual acids and salts with subsequent heat treatment of the purified yarn, the improvement which comprises depositing on the yarn before heat treatment an alkaline treating agent in an amount of 0.001 to 2 weight percent based on the dry fiber.

3,397,945
CHLORINATION OF CAUSTIC SODA SOLUTIONS USED FOR TEXTILE PROCESSING
Harry G. Smolens, Penn Valley, and Oliver S. Sprout, Jr., Glenside, Pa., assignors to Pennsalt Chemicals Corporation, Philadelphia, Pa., a corporation of Pennsylvania
No Drawing. Filed Feb. 28, 1963, Ser. No. 261,817
2 Claims. (Cl. 8—139)

This continuous process extends the useful life of caustic scouring solutions used in the manufacture of cotton goods by introducing chlorine directly into the sodium hydroxide solution while the cotton goods are being processed. The sodium hydroxide concentration will be within the range of 2 to 10 percent by weight while the rate of chlorine addition will be within the range of 0.1 to 2.0 percent by weight of the dry weight of the cotton cloth being processed. The temperature of the solutions are held between 160° F. and boiling, preferably between 180° F. and boiling.

3,397,946
METHOD OF PRODUCING ANHYDROUS CHROMOUS CHLORINE FROM CHROMIUM METAL
Robert L. de Beauchamp and Thomas A. Sullivan, Boulder City, Nev., assignors to the United States of America as represented by the Secretary of the Interior
Filed June 8, 1966, Ser. No. 556,826
4 Claims. (Cl. 23—87)

1. A method of producing chromous chloride comprising

(a) contacting solid chromium metal with chloride gas in a reaction zone maintained at a temperature above the melting point and below the boiling point of chromous chloride, whereby molten chromous chloride forms in said reaction zone;

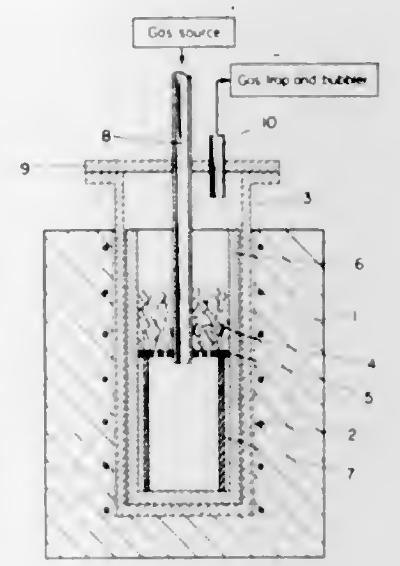

(b) passing said molten chromous chloride, as it forms, to a collection zone so that said molten chromous chloride is not contacted with excess chlorine gas in said reaction zone.

3,397,947
STABILIZED POLYPHOSPHATE PRODUCTS
Kenneth J. Shaver, St. Louis, Mo., assignor to Monsanto Company, St. Louis, Mo., a corporation of Delaware
No Drawing. Filed Oct. 1, 1965, Ser. No. 492,279
7 Claims. (Cl. 23—106)

Dense granular sodium tripolyphosphate having at least about 75 weight percent of Form I sodium tripolyphosphate, having a bulk density between about 0.7 and about 1.3 grams per cc. and particles larger than the openings of a U.S. Standard 100 mesh screen and containing dispersed through said particles at least about 0.1 weight percent of stabilizing cations selected from the group consisting of potassium and alkaline earth metal cations.

3,397,948
POLYPHOSPHATE PROCESSES AND PRODUCTS
Robert E. Mesmer, St. Louis, Mo., assignor to Monsanto Company, St. Louis, Mo., a corporation of Delaware
No Drawing. Filed Oct. 1, 1965, Ser. No. 492,327
5 Claims. (Cl. 23—106)

A stabilized, dense granular high Form I content sodium tripolyphosphate is disclosed which contains at least about 75% of Form I sodium tripolyphosphate and has a bulk density between about 0.7 and about 1.3 and particles too large to pass through a U.S. Standard 100 mesh screen and contains at least about 0.1 weight percent of sulfate ions dispersed through said particles as a stabilizer.

3,397,949
SODIUM TRIPOLYPHOSPHATE
Edward J. Griffith, Manchester, Mo., assignor to Monsanto Company, St. Louis, Mo., a corporation of Delaware
No Drawing. Filed Mar. 29, 1966, Ser. No. 538,195
15 Claims. (Cl. 23—106)

1. A process for producing anhydrous sodium tripolyphosphate from sodium tripolyphosphate hexahydrate which comprises dehydrating sodium tripolyphosphate hexahydrate in the presence of an effective amount of a nitrogenous degradation inhibitor selected from the group

consisting of cyclic nitrogenous compounds represented by the formula

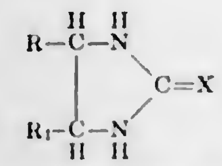

acyclic nitrogenous compounds represented by the formula

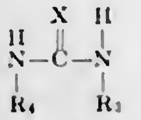

and mixtures thereof, wherein R, R_1 and R_4 are each selected from the group consisting of hydrogen and lower alkyl.

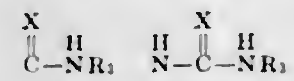

and X is selected from the group consisting of oxygen, sulfur and NH, and R_3 is selected from the group consisting of hydrogen and lower alkyl.

3,397,950
PROCESS FOR PREPARING SOLUTIONS FOR TELEVISION SCREENS
Roland Schnürch, Dusseldorf-Holthausen, and Alfred Köster and Helmut V. Freyhold, Dusseldorf-Oberkassel, Germany, assignors to Philadelphia Quartz Company, Philadelphia, Pa., a corporation of Pennsylvania
Filed Mar. 8, 1965, Ser. No. 437,648
Claims priority, application Germany, Mar. 19, 1964, H 52,101
5 Claims. (Cl. 23—110)

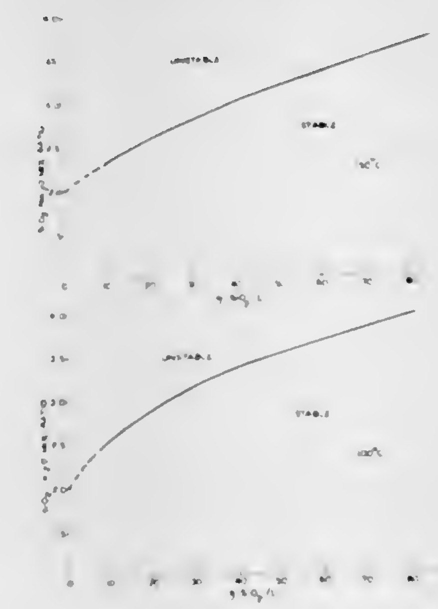

1. A process for the preparation of a potassium silicate solution that is especially useful as a coating component for television screens which comprises the steps of:

(a) obtaining a solid potassium silicate having a $SiO_2:K_2O$ mol ratio between about 4.0:1 and 4.3:1,
(b) admixing said potassium silicate with water,
(c) heating the potassium silicate and water above about 90° C.,
(d) adding sufficient potassium hydroxide to bring the $SiO_2:K_2O$ mol ratio within the range of 3.0:1 and 4.0 to 1.
(e) maintaining sufficient water in the aqueous potassium silicate so that the concentration does not exceed 165 grams of SiO_2 per liter of solution,
(f) recovering a treated potassium silicate,
(g) said mol ratio and said concentration being correlated so that operations are above the curve in FIGURE 2.

3,397,951
PROCESS FOR THE PREPARATION OF CRYSTALLIZED NEUTRAL ALUMINUM SULPHATES HAVING LOW WATER CONTENT
Maurice Adrien Jamey, Gardanne, Bouches du Rhone, and Pierre Jean Paul Maurel and Pierre Alexandre Duhart, Aix-en-Provence, Bouches du Rhone, France, assignors to Pechiney, Compagnie de Produits Chimiques et Electrometallurgiques, Paris, France
Filed June 21, 1965, Ser. No. 465,395
Claims priority, application France, June 26, 1964, 979,823
15 Claims. (Cl. 23—123)

A process for producing crystallized aluminum sulphate having the formula $Al_2(SO_4)_3$ with 4 to 8 molecules of water of crystallization and in which crystallization is effected from a solution of aluminum sulphate in dilute sulphuric acid at a temperature within the range of 105–140° C. in which the composition of the solution is defined by reference to a quadrilateral within a triangular diagram of the components SO_3, Al_2O_3, and H_2O.

3,397,952
PRODUCTION OF FUSED ALUMINA
George MacZura, East St. Louis, and Walter H. Gitzen, Belleville, Ill., assignors to Aluminum Company of America, Pittsburgh, Pa., a corporation of Pennsylvania
No Drawing. Filed Sept. 29, 1965, Ser. No. 491,403
6 Claims. (Cl. 23—141)

A method of producing fused alumina by mixing alumina having a Loss on Ignition of less than 0.5%, by weight, and alumina hydrate so that the Loss on Ignition of the resultant mixture is between 0.5% and 2.5%, by weight, and fusing the mixture.

3,397,953
FLOCCULATING AGENT
Thomas J. Galvin and Francis A. Hughes, Wilmington, Del., assignors to Atlas Chemical Industries, Inc., Wilmington, Del., a corporation of Delaware
No Drawing. Filed Mar. 4, 1965, Ser. No. 437,309
3 Claims. (Cl. 23—143)

Compositions comprising starch and polyacrylic acid as flocculating agents, particularly for the flocculation and sedimentation of iron oxide suspension.

3,397,954
PROCESS FOR DEHYDRATING BORIC ACID
Joseph L. Russell, Ridgewood, and Jack B. Feder, Dumont, N.J., assignors to Halcon International, Inc., a corporation of Delaware
No Drawing. Filed Sept. 1, 1964, Ser. No. 393,751
3 Claims. (Cl. 23—149)

This invention is directed to the dehydration of boric acid by heating a slurry thereof in an organic liquid to a temperature of 110° C. to 160° C. until a major portion has been converted to metaboric acid.

3,397,955
PURIFICATION OF PHOSPHORIC ACID DERIVED FROM PHOSPHATE ROCK
Roger Champ, Bourg-la-Reine, Michel Martin, Paris, and Louis Winand, Creteil, France, assignors of fifty percent to Produits Chimiques Pechiney-Saint-Gobain, Neuilly-sur-Seine, France, and fifty percent to Union Chimique Chemische Bedrijven, Brussels, Belgium
No Drawing. Filed Jan. 4, 1966, Ser. No. 518,525
Claims priority, application France, Jan. 5, 1965, 873
12 Claims. (Cl. 23—165)

A process for the purification of phosphoric acid by means of solvent extraction from an impure phosphoric acid solution derived from the treatment of phosphate rock with phosphoric acid in which addition is made of boron ions to the impure phosphoric acid solution in

amount sufficient to prevent formation of gelatinous silica, extracting the impure phosphoric acid solution with a water immiscible organic solvent in which the phosphoric acid is soluble and which extracts the phosphoric acid from the impure phosphoric acid solution, and then contacting the water immiscible organic solvent having the phosphoric acid dissolved therein with water to extract purified phosphoric acid from the immiscible organic solvent.

3,397,956
PROCESS FOR MANUFACTURING PHOSPHORIC ACID
William T. Buchanan, Tulsa, Okla., and Charles R. Hedenstad, Severna Park, Md., assignors to Nalco Chemical Company, Chicago, Ill., a corporation of Delaware
No Drawing. Filed July 28, 1966, Ser. No. 568,408
5 Claims. (Cl. 23—165)

A composition containing (a) the reaction product of a fatty acid with either alkylene polyamines or aminoalkyl alkanol amines and (b) an organic distillate is employed in the digestion of phosphate rock with H_2SO_4, prior to filtering of the $CaSO_4$ to alter the crystal formation of and prevent deposits of $CaSO_4$ from fouling the equipment.

3,397,957
PROCESS OF CONVERTING SODIUM SULFATE TO SODIUM SULFITE, PARTICULARLY FOR PULPING PROCESSES
George R. Smithson, Grove City, and John E. Hanway, Jr., Columbus, Ohio, assignors, by mesne assignments, to Container Corporation of America, Chicago, Ill., a corporation of Delaware
Filed May 27, 1965, Ser. No. 459,239
6 Claims. (Cl. 23—129)

Disclosed is a process for converting sodium sulfate, such as from wood pulping, to sodium carbonate and hydrogen sulfide by a fluidized bed reduction, the adsorption of the hydrogen sulfide on a molecular sieve, the fluidized bed oxidation of the hydrogen sulfide on the molecular sieve to sulfur dioxide, and the reaction of the sulfur dioxide with aqueous sodium carbonate to form sodium sulfite cooking liquor.

3,397,958
PROCESS FOR THE PRODUCTION OF PURIFIED ALUMINUM NITRIDE
René Perieres, La Tronche, Isere, and Maurice Noble, Grenoble, Isere, France, assignors to Pechiney Compagnie de Produits Chimiques et Electrometallurgiques
No Drawing. Filed Aug. 8, 1966, Ser. No. 570,757
Claims priority, application France, Aug. 10, 1965, 27,827
6 Claims. (Cl. 23—192)

A process for production of aluminum nitride relatively free of iron, silicon, and titanium by treatment of a bauxite containing these impurities with carbon, nitrogen, and sulfur, under controlled conditions.

3,397,959
PROCESS AND APPARATUS FOR THE PRODUCTION OF AMMONIA
Walter Scholz, Wolfratshausen, Germany, assignor to Linde Aktiengesellschaft, Wiesbaden, Germany, and Lurgi Gesellschaft für Warmeund Chemotechnik m.b.H., Frankfurt am Main, Germany
Filed Nov. 9, 1966, Ser. No. 593,102
Claims priority, application Germany, Nov. 15, 1965, L 52,151
11 Claims. (Cl. 23—199)

In a process for the production of ammonia, comprising the steps of:

(A) producing raw hydrogen gas which contains carbon monoxide;
(B) converting the carbon monoxide in the gas to carbon dioxide and further hydrogen by the addition of steam;
(C) scrubbing the gas to remove the carbon dioxide;
(D) purifying the resultant hydrogen gas to remove carbon monoxide; and
(E) reacting the resultant purified gas in an ammonia synthesis,

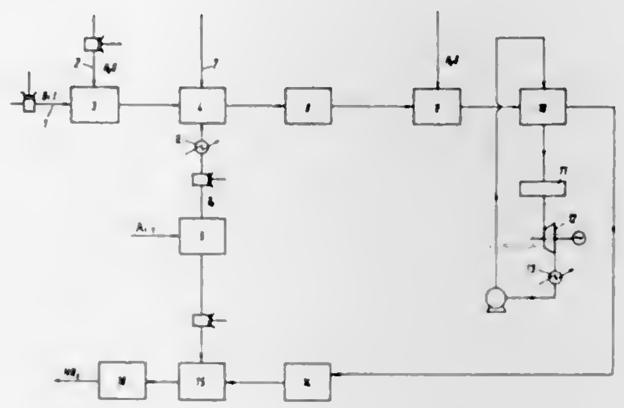

the improvement which comprises conducting step (A) at a pressure of 80–220 atmospheres; conducting steps (A), (B), (C) and (D), and preferably (E) also, at a pressure of 80–220 atmospheres, more preferably 140–170 atmospheres, and particularly wherein all steps are conducted at substantially the same pressure. By virtue of this process, an expensive compression step can be eliminated between step (A) and (E).

3,397,960
CONVERSION OF TRITHIANE INTO CARBON DISULFIDE
Hans-Dieter Rupp, Erlenbach, Erhard Siggel, Seckmauern, Gerhard Meyer, Obernburg, and Helmut Mägerlein, Erlenbach, Germany, assignors to Glanzstoff AG, Wuppertal, Germany
Continuation-in-part of application Ser. No. 541,481, Apr. 11, 1966. This application Dec. 5, 1966, Ser. No. 599,264
Claims priority, application Germany, Dec. 14, 1965, V 29,923
13 Claims. (Cl. 23—206)

This invention relates to a process for the conversion of trithiane into carbon disulfide, and more particularly, the invention is concerned with a process for converting trithiane recovered as a precipitate in rayon spinning baths into carbon disulfide which in turn is reusable in the production of viscose rayon. Especially good results distinguished by a high rate of reaction are achieved by reacting the trithiane with molten sulfur in the presence of alkali and alkaline earth metal compounds as catalysts.

3,397,961
CARBON BLACK PROCESS
Merrill E. Jordan, Walpole, William Gerald Burbine, Whitman, Harvey M. Cole, Walpole, and David L. Petterson, Wollaston, Mass., assignors to Cabot Corporation, Boston, Mass., a corporation of Delaware
Filed May 6, 1965, Ser. No. 453,662
6 Claims. (Cl. 23—209.8)

Improved yields of relatively fine particle size carbon blacks are obtained by introducing at least 2% of the total molecular oxygen employed as a separate stream directly into the center of a relatively non-turbulent, upwardly directed, carbon producing flame feeding on a predominantly gaseous hydrocarbon which is preferably unsaturated while enveloping the upper 25 to 90% of said flame with a dense cloud of smoke. It is strongly preferred for best results that the separate molecular oxygen stream so introduced into the center of said flame be substantially more concentrated that ordinary air.

3,397,962
PROCESS FOR HYDROGEN OR AMMONIA SYNTHESIS GAS
Arthur M. Squires, 245 W. 104th St., New York, N.Y. 10025
Filed Feb. 16, 1965, Ser. No. 433,066
8 Claims. (Cl. 23—213)

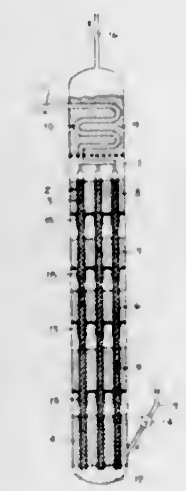

There is provided an improved process for producing hydrogen or ammonia synthesis gas in which heat developed by the shifting of carbon monoxide to hydrogen over calcined dolomite is used to drive the endothermic reforming reaction between a hydrocarbon and steam. The steam/hydrocarbon mixture is caused to flow downward through tubes filled with a suitable reforming catalyst, and reformed gases to be shifted are caused to flow upward in counter-current heat-transfer relationship with the mixture undergoing reforming within the tubes. The upward-flowing gases are caused to pass through several fluidized beds of solids at progressively lower temperatures each of which contain intermingled microscopic crystallites of both calcium and magnesium oxides. Heat developed by shift and recarbonation of CaO, together with sensible heat derived from the cooling of the upward-flowing gases, is passed from the fluidized beds to the steam/hydrocarbon mixture within the tubes. If ammonia synthesis gas is desired, a secondary reforming step with air is interposed between the bottom outlet of the vertical tubes and the inlet to the bottommost of the several fluidized beds. The process is conducted at an elevated pressure. Calcined dolomite is supplied to the process from a calcination zone, whose gaseous effluent is advantageously used to generate power.

3,397,963
REDUCING AGENT
Kuno Wagner, Leverkusen-Steinbuchel, Germany, assignor to Farbenfabriken Bayer Aktiengesellschaft, Leverkusen, Germany, a German corporation
No Drawing. Filed Apr. 1, 1965, Ser. No. 444,778
Claims priority, application Germany, Apr. 4, 1964, F 42,520
21 Claims. (Cl. 23—226)

1. Reducing agent consisting of a formic acid compound selected from the group consisting of addition products of formic acid with tertiary organic amines, wherein the reducing agent is combined with an additionally activating metal component.

9. Method for reducing reducible inorganic and organic compounds which comprises contacting at a temperature between about 40–180° C. and a pressure at least as high as atmospheric pressure such a compound with a reducing agent in the form of a formic acid compound selected from the group consisting of addition products of formic acid with tertiary organic amines and salts of formic acid with tertiary organic amines, wherein the reducing agent is combined with an additionally activating metal component.

3,397,964
SPOT TEST FOR TITANIUM IN Cu-Ni ALLOY
David M. Zall, Annapolis, Md., assignor to the United States of America as represented by the Secretary of the Navy
Filed Jan. 28, 1965, Ser. No. 428,883
5 Claims. (Cl. 23—230)

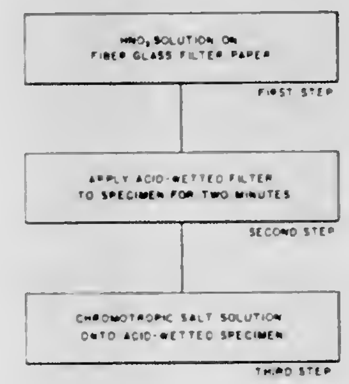

A method for performing a spot test for differentiating Monel from K-Monel by testing for the presence of titanium in K-Monel. The test is performed by placing a solution of nitric acid on a fiberglass filter paper on the surface to be tested. A chromotropic salt solution is then added to the filter paper and the presence of titanium is indicated by the appearance of a red color on the filter paper.

3,397,965
GAS ANALYSIS UNIT
Robert R. Berueffy, 4861 Beach Drive SW., Seattle, Wash. 98116
Filed June 17, 1965, Ser. No. 464,727
9 Claims. (Cl. 23—230)

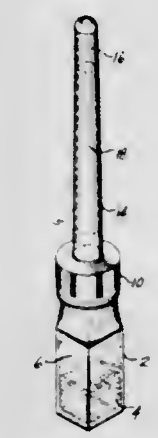

1. A method of making a quantitative determination of a component in a chemical specimen of generally known characteristics, comprising separating the component from the specimen by converting it into independent volatilized form, inducing the thus volatilized component to flow into one end of an open-ended tube having a liquid reagent therein that is suspended in a free physical state across the bore of the tube, said reagent containing a substance which is reactive quantitatively with the thus volatilized component, and which is present in an amount in excess of the maximum stoichiometric amount expected for the specimen, centrifuging the tube to displace the liquid portion of the reacted reagent into a receptacle, and com-

paring the displaced liquid portion with a standard derived by passing a known quantity of the component through the same steps.

3,397,966
OZONE DETERMINATION
Charles Arthur Plantz, Pittsburgh, Pa., assignor to Mine Safety Appliances Company, Pittsburgh, Pa., a corporation of Pennsylvania
No Drawing. Filed Nov. 17, 1964, Ser. No. 411,726
11 Claims. (Cl. 23—232)

Ozone in other gases is detected or quantitatively determined by passing it through an indicator of sulfonephthalein dye in its alkaline form on an inert carrier, which indicator changes color in response to contact with ozone. Highly sensitive indicators have glass beads coated with magnesium oxide, zirconium oxide, or titanium oxide and impregnated with the dye.

3,397,967
DITHIOBIS(PHOSPHONOTHIOIC DIFLUORIDE), $P_2S_4F_4$, AND ITS METHOD OF PREPARATION
Herbert W. Roesky, Gottingen, Germany, assignor to E. I. du Pont de Nemours and Company, Wilmington, Del., a corporation of Delaware
No Drawing. Filed Aug. 3, 1966, Ser. No. 569,847
2 Claims. (Cl. 23—357)

Dithiobis(phosphonothioic difluoride) prepared by contacting bromine with an alkali metal phosphorodifluoridodithioate which is useful as a chemical reducing agent is claimed.

3,397,968
POROUS MATERIALS
Henry W. Lavendel, Palo Alto, Edward Bruce, San Leandro, Francis J. Clauss, Atherton, and Alfred G. Elliot, San Jose, Calif., and George C. Kuczynski, South Bend, Ind., assignors to Lockheed Aircraft Corporation, Burbank, Calif.
Continuation-in-part of application Ser. No. 541,299, Apr. 8, 1966. This application June 19, 1967, Ser. No. 649,789
9 Claims. (Cl. 29—182.5)

7. A porous sintered metal material useful for infiltration with lubricants and as fluid flow distributors, filters and the like characterized in having interconnected pore channels of average pore diameter size in accordance with ASTM Standard E128–61 of from substantially less than one micron to about 25 microns and in exhibiting excellent pore channel stability at high temperatures, said material consisting essentially of a continuous framework of sintered metal particles defining a network of inter-connected pore channels penetrating said material, inert dispersoid particles distributed throughout the framework of said sintered particles and on the surfaces of said pore channels, said dispersoid particles being present in an amount by volume fraction of from about 0.001 to about 0.20 and forming with said sintered metal particles a wetting angle of at least 90° as measured from the sintered metal-dispersoid particle interface to the sintered metal-atmosphere interface and wherein at least 70 percent of said pore channels are interconnected.

3,397,969
ENGINE FUEL ADDITIVES
James W. Tooke, Bartlesville, Okla., assignor to Phillips Petroleum Company, a corporation of Delaware
No Drawing. Filed Apr. 25, 1966, Ser. No. 544,697
7 Claims. (Cl. 44—57)

Addition of hexaalkylditin compounds to hydrocarbon fuels improves the combustion chartacteristics of such fuels.

3,397,970
POUR POINT DEPRESSANT ADDITIVE
Barney R. Strickland, Westfield, N.J., assignor to Esso Research and Engineering Company, a corporation of Delaware
No Drawing. Filed May 18, 1964, Ser. No. 368,414
2 Claims. (Cl. 44—62)

Middle distillate fuel containing a copolymer of ethylene and a C_2 to C_5 olefinically unsaturated ester pour depressant tending to promote the formation of water haze, is inhibited against said haze by a combination of the dimer of linoleic acid and quaternary ammonium salt.

3,397,971
ANTI-STATIC HYDROCARBON FUEL AND ADDITIVE THEREFOR
Johan L. van der Minne and Pieter H. J. Hermanie, Amsterdam, Netherlands, assignors to Shell Oil Company, New York, N.Y., a corporation of Delaware
No Drawing. Continuation of application Ser. No. 430,783, Oct. 15, 1964, which is a division of application Ser. No. 133,056, Aug. 22, 1961, now Patent No. 3,164,620. This application Nov. 15, 1965, Ser. No. 507,654
Claims priority, application Netherlands, Sept. 28, 1960, 256,332
5 Claims. (Cl. 44—68)

1. A petroleum distillate boiling within the gasoline and kerosene boiling ranges having a reduced tendency to accumulate electrostatic charges during movement thereof, containing per liter from about 1×10^{-9} to about 1×10^{-5} gram atoms of chromium as the chromium salt of C_8–C_{22} alkyl salicyclic acids, said salt having been prepared by heating an alkali metal salt of a C_8–C_{20} alkyl salicyclic acid with chromium halide to form a chromium alkyl salicyclate, and exposing the salicylate to a temperature of 100°–200° C. in the presence of 1.0–1.5% by weight of an oxidizing agent of the group consisting of (a) a nitrohydrocarbon selected from the group consisting of C_{1-4} nitroalkanes containing 1–4 nitro groups and mono- to di-nitro aromatic hydrocarbons having 6–20 carbon atoms per molecule, (b) an inorganic nitrate selected from the group consisting of ammonium and chromium nitrate and (c) a peroxide selected from the group consisting of hydrogen, acyl and alkyl peroxides.

3,397,972
GLASS BATCH MELTING PROCESS
Edgard Brichard, 155 Chausee de Gilly, Jumet, Belgium, and André Malicheff, 53 Chausee de Zeebrugge, Lissewege, Belgium
Continuation-in-part of application Ser. No. 15,065, Mar. 15, 1960. This application Nov. 23, 1965, Ser. No. 509,417
Claims priority, application Belgium Mar. 28, 1959
10 Claims. (Cl. 65—27)

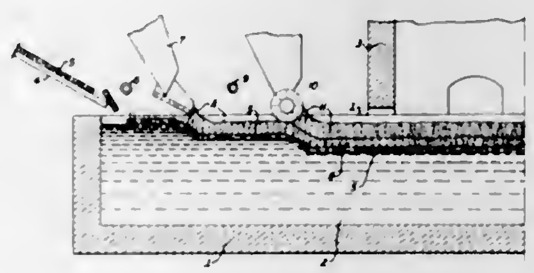

This process comprises the steps of depositing a layer of gas producing material over the glass bath, depositing a glass batch layer over the gas producing material, and then raising the temperatures of the layers to cause simultaneously the fusion of the glass batch and the production of gas from the gas producing material.

3,397,973
BUBBLER APPARATUS FOR A GLASS MELTING FURNACE
Robert R. Rough, Toledo, Ohio, assignor to Owens-Illinois, Inc., a corporation of Ohio
Filed Oct. 23, 1958, Ser. No. 769,211
10 Claims. (Cl. 65—134)

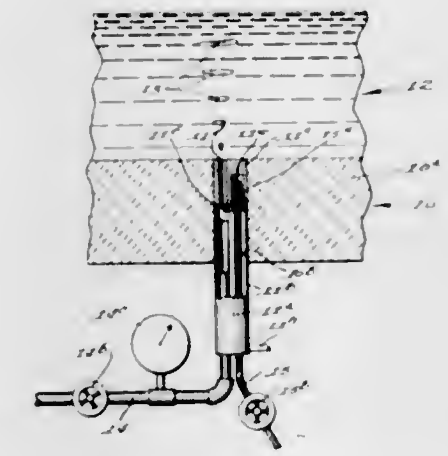

1. The method of glass melting furnace operation which comprises, introducing streams of gaseous fluid into a pool of molten glass in such a furnace via tubes projected through the bottom thereof to a region above the bottom level of the pool, and directing gaseous cooling fluid to the region surrounding the upper ends of such tubes to freeze any molten glass entering them whenever the passage of such streams into the molten glass is discontinued and thus restrict the downward flow of molten glass thereinto to a level above the furnace bottom.

10. A bubbling means for use in a glass furnace chamber containing viscous molten glass, said glass chamber being defined by plural adjoining walls and a bottom wall, the bottom wall having an aperture therein below the surface of the molten glass, said bubbling means comprising a housing wall forming a heat transfer chamber disposed in and sealing said aperture, a first conduit within said heat transfer chamber, a second conduit within said heat transfer chamber and having an open end defining a bubbler orifice, means for supplying a gaseous medium at variable pressure to said second conduit, said bubbler orifice directing the gaseous medium into the molten glass, said first conduit having an outlet in proximity to said bubbler orifice, a coolant supply means connected to the first conduit, and valve means in said first conduit for selectively regulating the flow of coolant to said first conduit outlet, whereby the viscosity of the molten glass adjacent said bubbler orifice is selectively increased to limit entry of molten glass into said bubbler orifice.

3,397,974
SHEET GLASS APPARATUS
James T. Zellers, Jr., Charleston, W. Va., assignor to Libbey-Owens-Ford Glass Company, Toledo, Ohio, a corporation of Ohio
Filed Nov. 13, 1962, Ser. No. 237,146
3 Claims. (Cl. 65—162)

Apparatus for heating the draw pot of a Colburn window glass machine by electrical energy. A plurality of electrical resistance heating elements are positioned in the heating chamber beneath the draw pot, and temperature sensing units within the heating chamber control the temperature of corresponding heating elements to thereby

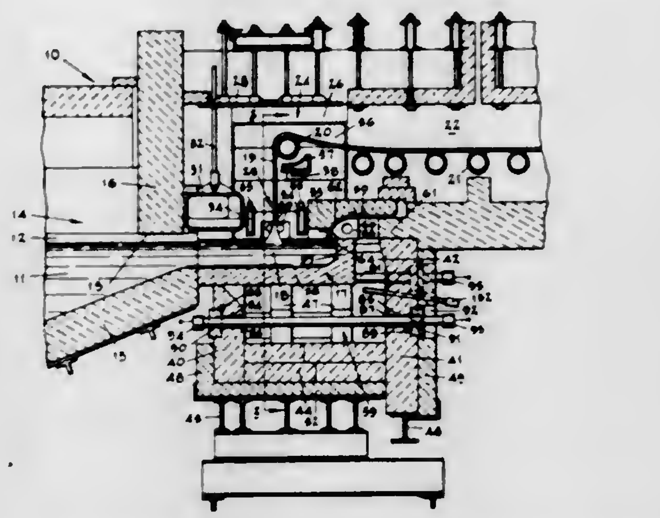

control the temperature pattern of the molten glass in the draw pot.

3,397,975
APPARATUS FOR PRODUCING SHEET GLASS
Frank W. Irland, Shreveport, La., assignor to Libbey-Owens-Ford Glass Company, Toledo, Ohio, a corporation of Ohio
Filed Oct. 17, 1963, Ser. No. 316,970
3 Claims. (Cl. 65—182)

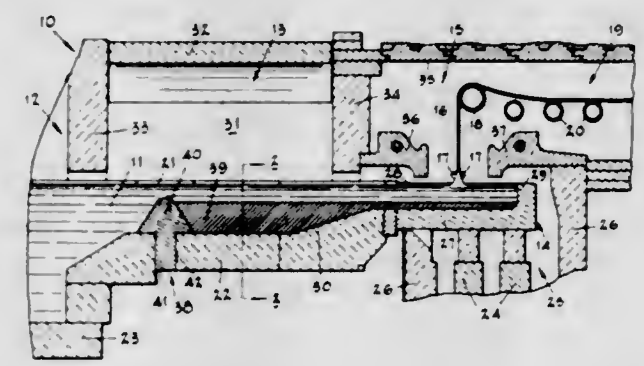

A tank-furnace for the continuous production of window glass wherein the floor of the working receptacle from which the sheet is drawn upwardly is at a higher elevation than the floor of the adjacent cooling chamber through which molten glass flows into the working receptacle, and a body of molten metal is maintained beneath the molten glass in the cooling chamber and working receptacle.

3,397,976
FLOATING REFRACTORY DRAW BAR
William Christie Hynd, Liverpool, England, assignor to Pilkington Brothers Limited, Liverpool, England, a corporation of Great Britain
Filed July 24, 1964, Ser. No. 384,939
Claims priority, application Great Britain, July 29, 1963, 30,045/63
2 Claims. (Cl. 65—344)

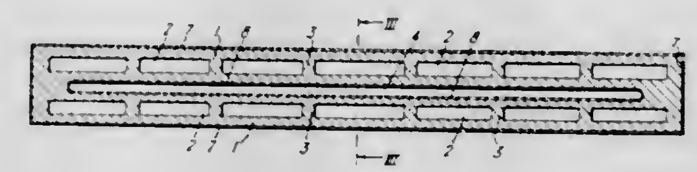

A refractory draw bar for use in glass making, which contains sealed cavities providing buoyancy in molten glass and encased in a glass-resistant metal.

3,397,977
METHOD OF DESTROYING UNDESIRABLE PLANTS
Sidney B. Richter, Chicago, and Alfred A. Levin, Skokie, Ill., assignors to Velsicol Chemical Corporation, Chicago, Ill., a corporation of Illinois
No Drawing. Original application Feb. 2, 1965, Ser. No. 434,625, now Patent No. 3,335,171, dated Aug. 8, 1967. Divided and this application Feb. 13, 1967, Ser. No. 615,343
4 Claims. (Cl. 71—112)

A method of destroying undesirable plants which comprises contacting said plants with a herbicidal composition comprising an inert carrier, and as an essential active ingredient in a quantity which is injurious to said plants, a compound of the formula

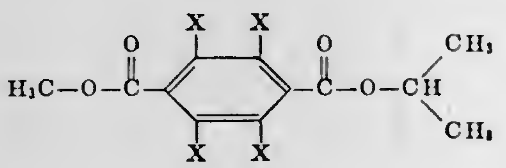

wherein X is halogen.

3,397,978
METHOD OF DESTROYING UNDESIRABLE PLANTS
Sidney B. Richter, Chicago, and Alfred A. Levin, Skokie, Ill., assignors to Velsicol Chemical Corporation, Chicago, Ill., a corporation of Illinois
No Drawing. Original application Feb. 23, 1965, Ser. No. 434,654, now Patent No. 3,341,571, dated Sept. 12, 1967. Divided and this application Feb. 13, 1967, Ser. No. 615,354
4 Claims. (Cl. 71—112)

A method of destroying undesirable plants which comprises contacting said plants with a herbicidal composition comprising an inert carrier, and as an essential active ingredient in a quantity which is injurious to said plants, a compound of the formula

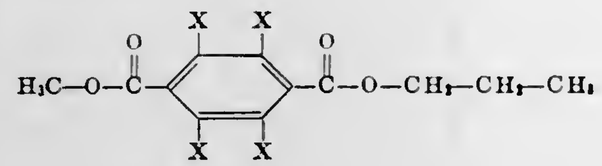

wherein X is halogen.

3,397,979
PROCESS FOR INCORPORATING ALUMINUM INTO DISPERSION-MODIFIED METALS
Richard F. Regester, Havertown, Pa., assignor, by mesne assignments, to Fansteel Metallurgical Corporation, a corporation of New York
No Drawing. Filed Jan. 10, 1966, Ser. No. 519,442
2 Claims. (Cl. 75—206)

Aluminum is alloyed with a dispersion-modified iron-group metal or alloy having dispersed uniformly therein a particulate metal oxide having a free energy of formation (ΔF) at 1000° C., of at least 104 kilocalories per gram atom of oxygen and an average particle size in the range of 5 to 100 millimicrons. About 0.05 to 10% by volume of a particulate metal oxide having a ΔF at 1000° C. of at least 104 kilocalories per gram atom of oxygen is dispersed in particulate aluminum. A minor proportion of said oxide-containing aluminum is mixed with a major proportion of particulate dispersion-modified iron-group metal or alloy and the mixture is alloyed.

3,397,980
PROTECTIVE LAMINATE FOR FILM CONTAINING SILVER MICRO-IMAGE
Eliot Stone, Los Angeles, Calif., assignor to The National Cash Register Company, Dayton, Ohio, a corporation of Maryland
Filed June 1, 1964, Ser. No. 371,302
14 Claims. (Cl. 96—50)

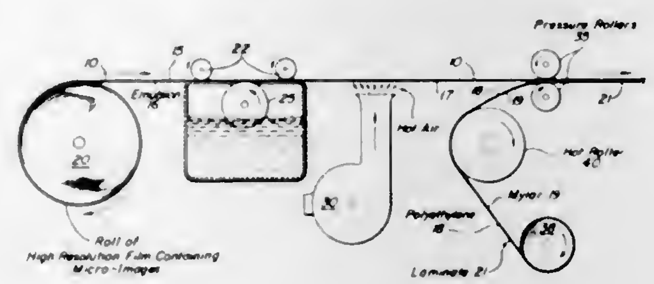

A photographic film having micro-images formed thereon is provided with a protective transparent laminate overlay. The laminate is comprised of a durable outer layer and an inner layer of polyethylene. The laminate is bonded to the emulsion coating of the photographic film with an intermediate layer of a polyvinyl acetate binder that intimately bonds to both the emulsion and the polyethylene. The protective overlay protects film from harmful scratches and the like and also inhibits duplication of the micro-images formed on the emulsion by the process of contact printing. The polyvinyl acetate binder prevents separation of the protective layer from the photographic film without ruining the micro-image.

3,397,981
PHOTOGRAPHIC SENSITIZING DYES OF THE MEROCYANINE AND STYRYL TYPES IN SILVER HALIDE PHOTOGRAPHIC EMULSIONS
Lewis L. Lincoln and Leslie G. S. Brooker, Rochester, N.Y., assignors to Eastman Kodak Company, Rochester, N.Y., a corporation of New Jersey
No Drawing. Continuation-in-part of application Ser. No. 226,756, Sept. 27, 1962. This application Mar. 7, 1966, Ser. No. 532,100
7 Claims. (Cl. 96—102)

Merocyanine and styryl dyes derived from 1,2-alkylene benzimidazoles and 1,2-alkylene naphthimidazoles are valuable spectral sensitizers for hydrophilic colloid silver halide emulsions used in coating light-sensitive layers and photographic elements.

3,397,982
XEROGRAPHIC PLATE WITH AN INORGANIC GLASS BINDER HAVING AN OVERCOATING CONSISTING ESSENTIALLY OF ALUMINUM OXIDE
Richard L. Lane, Penfield, N.Y., assignor to Xerox Corporation, Rochester, N.Y., a corporation of New York
No Drawing. Filed Dec. 21, 1964, Ser. No. 420,170
4 Claims. (Cl. 96—1.5)

An electrophotographic plate and method comprising a photoconductive layer including an inorganic glass material comprising an inorganic glass binder and finely divided inorganic photoconductive particles dispersed therein, said photoconductive layer having an overcoating comprising a composition selected from the group consisting of germanium dioxide, the oxides of vanadium, titanium dioxide, silicon dioxide, zirconium dioxide, aluminum oxide, and mixtures thereof.

3,397,983
PHOTOGRAPHIC MATERIALS PRODUCING A COLOR CHANGE BY REACTING A METAL SALT WITH TETRAHYDROQUINOLINE
Louis Maria De Haes, Edegem, and Jozef Frans Willems, Wilrijk-Antwerp, Belgium, assignors to Gevaert Photo-Producten N.V., Mortsel, Belgium, a company of Belgium
No Drawing. Continuation of application Ser. No. 174,246, Feb. 19, 1962. This application Jan. 31, 1967, Ser. No. 613,037
Claims priority, application Netherlands, Feb. 17, 1961, 261,381; Feb. 6, 1962, 274,437, 274,438
15 Claims. (Cl. 96—29)

1. A process for the photographic production of copies of an original to be copied which process comprises the steps of:

(1) Exposing with light to the original to be copied a light-sensitive material having at least one light-sensitive silver halide emulsion layer and having incorporated therein in effective contact with the silver halide of said emulsion layer a 3-pyrazolidone derivative and 8-hydroxy-1,2,3,4-tetrahydroquinoline in sufficient amounts to photographically develop said emulsion layer in the exposed areas thereof upon exposure of said material to heat and a compound adapted to release moisture on heating;

(2) Heating the light-sensitive material with the exposed emulsion thereon to a generally uniform temperature to develop in said layer a photographic image of said original; and

(3) While said emulsion layer is undergoing heat development according to step (2), contacting said layer with a face of an image-receiving material carrying a water-soluble salt of metal which salt does not undergo substantial coloration on exposure to light and in presence of moisture releases metal ions reactive with said 8-hydroxy-1,2,3,4-tetrahydroquinoline to produce a distinctive color change:

to transfer said tetrahydroquinoline from the undeveloped areas of said emulsion layer onto said face and produce by reaction of said tetrahydroquinoline with said metal ions an image of said original of generally opposite gradation to photographic image of said original in said emulsion layer.

3,397,984
SILVER DYE BLEACH MATERIALS IMPROVING IMAGE DENSITY
Carl J. Williams, Jr., Rochester, N.Y., assignor to Eastman Kodak Company, Rochester, N.Y., a corporation of New Jersey
No Drawing. Filed Aug. 19, 1965, Ser. No. 481,081
9 Claims. (Cl. 96—73)

This invention relates to photographic silver-dye-bleach materials having a bleachable dye and a lactone in the emulsion for the purpose of increasing the dye density.

3,397,985
LIGHT SENSITIVE DIAZOTYPE MATERIAL AND DIAZONIUM COMPOUNDS THEREFOR
Andreas Joseph Johannes Hendrickx, Venlo, Netherlands, assignor to Van der Grinten N.V., Northern Limburg, Netherlands
Filed Dec. 31, 1964, Ser. No. 422,693
Claims priority, application Netherlands, June 1, 1964, 6406149
9 Claims. (Cl. 96—91)

Diazotype materials yielding high-contrast azo-dyestuff images on more brightly bleached-out (whiter) backgrounds and having high coupling activity, good light-sensitivity and improved keeping qualities are obtained by providing in the light-sensitive layer a new benzene diazonium salt having a pyrrolidon(2)yl group ortho to the diazonium group, an acylamino or a thio group para

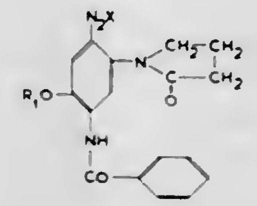

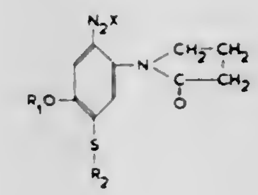

thereto, and an ether group para to the pyrrolidon(2)yl group.

3,397,986
PHOTOGRAPHIC EMULSION STABILIZED WITH BIS(p-ACYLAMIDOPHENYL)DISULFIDES
Allan G. Millikan and Arthur H. Herz, Rochester, N.Y., assignors to Eastman Kodak Company, Rochester, N.Y., a corporation of New Jersey
No Drawing. Filed Dec. 29, 1964, Ser. No. 421,994
14 Claims. (Cl. 96—109)

The stabilization against fog of photographic silver halide emulsions using bis(p-acylamidophenyl)disulfides is disclosed.

3,397,987
PHOTOGRAPHIC EMULSIONS CONTAINING MERCAPTO DEVELOPMENT ANTI-FOGGANTS
George W. Luckey and Bernard D. Illingsworth, Rochester, N.Y., assignors to Eastman Kodak Company, Rochester, N.Y., a corporation of New Jersey
No Drawing. Filed May 24, 1965, Ser. No. 458,400
19 Claims. (Cl. 96—109)

Photographic silver halide emulsions comprising unfogged surface latent image grains and fogged internal image silver halide grains on which is adsorbed a heterocyclic nitrogen fog inhibiting compound and photographic elements comprising said emulsions are disclosed.

3,397,988
PHOTOGRAPHIC MATERIAL
August Jean Van Paesschen, Hove, and Marcel Nicolas Vrancken, Berchem-Antwerp, Belgium, assignors to Gevaert Photo-Producten N.V., Mortsel-Antwerp, Belgium, a Belgian company
No Drawing. Filed Jan. 24, 1964, Ser. No. 339,877
Claims priority, application Belgium, Jan. 25, 1963, 42,286
7 Claims. (Cl. 96—114)

1. Photographic material comprising a support and at least one layer thereon, said layer containing as binder material a mixture consisting essentially of gelatin and a latex of a copolymer of butadiene and a lower ester of acrylic or methacrylic acid, water, and an anionic or nonionic emulsifying agent, the amount of said co-polymer being not greater than about 80% by weight of said binder mixture.

3,397,989
PHOTOGRAPHIC, GELATIN-CONTAINING LAYERS
Wolfgang Keberle, Leverkusen, Wolfgang Himmelmann, Cologne-Stammheim, Dieter Dieterich, Leverkusen, Otto Bayer, Burscheid, and Fritz Nittel, Cologne-Stammheim, Germany, assignors to Agfa-Gevaert Aktiengesellschaft, Leverkusen, Germany, a corporation of Germany
No Drawing. Filed Mar. 2, 1966, Ser. No. 531,022
Claims priority, application Germany, Mar. 17, 1965, A 48,664
6 Claims. (Cl. 96—114)

Gelatin in photographic layers is flexibilized by anionic polyurethane of linear compound that has two terminal hydroxy, carboxy or amino groups and a molecular weight from about 300 to about 20,000. The compound is reacted with a diisocyanate to form the polyurethane. Carboxy or sulfonic acid groups give the polyurethane anionic character, and such groups can be added by reacting a hydroxy or amino acid with the above compound and the diisocyanate.

3,397,990
HEXAMETHONIUM SALTS AS GROWTH PROMOTERS IN ANIMAL FEED COMPOSITIONS
Francis A. Hochstein, New London, Conn., assignor to Chas. Pfizer & Co., Inc., New York, N.Y., a corporation of Delaware
No Drawing. Filed Jan. 30, 1964, Ser. No. 341,407
7 Claims. (Cl. 99—2)

Compositions for increasing the growth and feed efficiency of quadruped animals, both ruminant and non-ruminant, comprising nutritionally balanced animal feeds containing minor proportions of non-toxic hexamethonium salts of the formula $[(CH_3)_3N—(CH_2)_6—N(CH_3)_3]^{+2}Z$ wherein Z is a non-toxic anion and is present in sufficient molar proportion to satisfy electroneutrality.

3,397,991
BLENDED PROTEIN ISOLATION PROCESS AND PRODUCT
Robert A. Johnson, 1501 San Ardo Drive, San Jose, Calif. 95125, and Patricia T. Anderson, 2631 Isabella Ave., San Mateo, Calif. 94403
No Drawing. Filed Apr. 3, 1964, Ser. No. 357,272
9 Claims. (Cl. 99—17)

Protein from more than one vegetable protein source is colloidally solubilized to provide a homogeneous blend of protein having a preselected assay of essential amino acids.

3,397,992
LACTALBUMIN AND LACTOGLOBULIN FREE DRINK
Peter P. Noznick, Evanston, and Charles W. Tatter, Homewood, Ill., assignors to Beatrice Foods Co., Chicago, Ill., a corporation of Delaware
No Drawing. Continuation-in-part of application Ser. No. 356,058, Mar. 31, 1964. This application July 5, 1967, Ser. No. 651,155
18 Claims. (Cl. 99—63)

A lactalbumin and lactoglobulin free composition suitable for use as a milk substitute comprising fat, a polyglycerol partial higher fatty acid ester and colloidal cellulose dispersed in water.

3,397,993
PROCESS FOR PREPARING FROZEN FRENCH FRY POTATO SEGMENTS
William K. Strong, Addison, Ill., assignor to McDonald's System, Inc., a corporation of Illinois
No Drawing. Filed Sept. 20, 1965, Ser. No. 488,742
9 Claims. (Cl. 99—100)

A process for preparing frozen french fried potatoes which when finish fried closely simulate french fried potatoes prepared from fresh potatoes, in which potatoes are peeled, trimmed, cut into elongate segments, blanched as with steam to translucency, dehydrated internally and from the surface to a weight loss of up to about 35%, fried for a short time and then frozen prior to finish frying.

3,397,994
IMITATION CREAM CHEESE SPREAD CONTAINING POLYUNSATURATED FAT
Gilbert D. Elenbogen, Skokie, and Morris Baron, Chicago, Ill., assignors to Vitamins, Inc., Chicago, Ill., a corporation of Illinois
No Drawing. Continuation-in-part of application Ser. No. 275,214, Apr. 24, 1963. This application Sept. 16, 1964, Ser. No. 397,037
9 Claims. (Cl. 99—116)

A dietary spread resembling cream cheese containing 15 to 40% of fat which is high in polyunsaturation, 5 to 13% phosphoprotein solids, and water. The spread is made by homogenizing the fats, the phosphoprotein, and the water at 160° F. A lactic acid producing culture is added and allowed to incubate until about pH 4.6 is achieved. The mixture is heated to about 165° F., whereupon a vegetable gum is added and the mixture again is homogenized.

3,397,995
EDIBLE DIETARY SPREAD AND METHOD OF MAKING SAME
Gilbert D. Elenbogen, Skokie, Ill., assignor to Vitamins, Inc., Chicago, Ill., a corporation of Illinois
No Drawing. Continuation-in-part of application Ser. No. 318,078, Oct. 22, 1963. This application Feb. 16, 1966, Ser. No. 527,724
5 Claims. (Cl. 99—116)

1. The method of producing an emulsified edible spread resembling cream cheese characterized by having a smooth texture, being substantially homogenous at room and refrigerator temperatures, and uniformly spreadable, and having a ratio of polyunsaturated to saturated fats of about 3:1 to 9:1, said method including homogenously admixing about 15 to 40% by weight of fat, about 0.1 to 2% of a stabilizing vegetable gum, about 5 to 13% by weight of phosphoprotein solids, then adding about .2 to 3% by weight lactic acid, the balance being water, and then recovering therefrom a solidified spread product.

3,397,996
ALL-PURPOSE SHORTENING COMPOSITION
Richard T. Darragh, Colerain Township, Hamilton County, and Kenneth W. Nelson, Sharonville, Ohio, assignors to The Procter & Gamble Company, Cincinnati, Ohio, a corporation of Ohio
No Drawing. Filed Dec. 29, 1964, Ser. No. 422,048
9 Claims. (Cl. 99—118)

All-purpose, glyceride shortening composition suitable for the preparation of cakes and icings, which contains a combination of four additives:

(a) monoglyceride;
(b) polyoxyethylene sorbitan monoester;
(c) decaglycerol ester; and
(d) half ester of dicarboxylic acid with monoester of straight chain aliphatic diol.

3,397,997
OLEAGINOUS GEL COMPOSITION
Cornelis H. Japikse, Springfield Township, Hamilton County, Ohio, assignor to The Procter & Gamble Company, Cincinnati, Ohio, a corporation of Ohio
No Drawing. Continuation-in-part of application Ser. No. 408,348, Nov. 2, 1964. This application Apr. 25, 1966, Ser. No. 544,695
13 Claims. (Cl. 99—118)

An oleaginous gel composition having a stable beta crystalline phase with a solids particle size up to about

10 microns prepared by rapidly crystallizing triglyceride solids in-process to beta-phase by rapidly chilling to less than about 85° F. in less than about 60 seconds a completely melted mixture of from about 92% to about 99%, by weight, of liquid glyceride oil having an iodine value of about 107 or greater and from about 1% to 8%, by weight, of solid triglyceride having an iodine value not exceeding about 12, said solid triglyceride consisting essentially of a blend of (a) beta-phase-tending hardstock and (b) non-beta-phase-tending hardstock, the proportion of (a) and (b) in said solid triglyceride blend ranging from about 1:4 to about 4:1.

3,397,998
METHOD FOR PRODUCING POURABLE REFRIGERATED MARGARINE
William E. Fricks, Cedartown, Ga., assignor to Fricks Foods, Inc., Cedartown, Ga., a corporation of Georgia
No Drawing. Filed Oct. 20, 1964, Ser. No. 405,289
2 Claims. (Cl. 99—123)

A method of converting conventional margarine which normally is solid at room temperature in to a form which is pourable at less than 40° F., said method comprising: providing a quantity of said conventional margarine refrigerated to solid condition at about 40° F.; adding thereto a substantially equal quantity of edible vegetable oil which remains liquid at about 40° F.; subjecting the mixture to violent stirring action at about one to ten minutes and refrigerating the mixture thus formed to between about 38° F. and about 40° F.

3,397,999
PROCESS FOR HOLDING OLIVES BEFORE PROCESSING
Rudolf A. Kellerman, San Francisco, Calif., assignor to V. R. Smith Olive Company, Inc., Lindsay, Calif., a corporation of California
No Drawing. Filed Dec. 21, 1964, Ser. No. 420,143
3 Claims. (Cl. 99—156)

Olives preserved prior to canning by placing them in an aqueous, brine-free solution containing about 0.1% to 0.3%, by weight, of phosphoric acid.

3,398,000
PACKAGING DEVICE FOR BUTTER PATTIES
Leo Peters, 750 Plymouth Road SE., Grand Rapids, Mich. 49506
Filed June 21, 1965, Ser. No. 465,410
2 Claims. (Cl. 99—179)

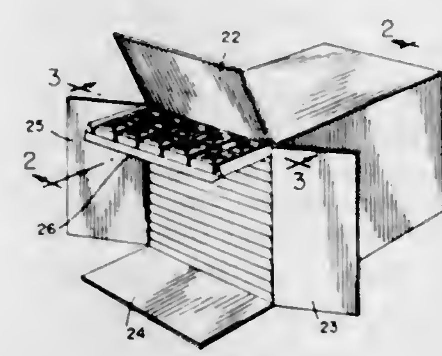

A generally rectangular solid, hollow container openable along one side to selectively remove one of a plurality of butter pat-carrying trays, each tray having portions along two opposite sides formed into guide rails to serve as sliding surfaces as well as protecting the butter pats from being crushed by trays thereabove.

3,398,001
PROCESS OF PREPARING AND PACKAGING FROZEN AVOCADOS
Ernest J. Benson, Madison, Wis., assignor to Air Reduction Company, Incorporated, New York, N.Y., a corporation of New York
Filed Apr. 26, 1963, Ser. No. 275,977
5 Claims. (Cl. 99—193)

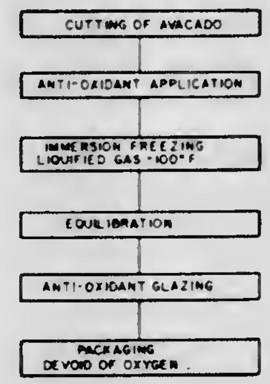

1. The method of packaging an avocado which comprises cutting the avocado and removing the seed, dipping the avocado for approximately one minute in an anti-oxidant from the group consisting of .5% ascorbic acid, one-half strength lemon juice, and citric acid, immersing the avocado in a liquified gas from the group consisting of nitrous oxide and nitrogen for a period of between about 15 to 50 seconds, removing the avocado from the liquified gas before the avocado is frozen for its full thickness, completing the freezing of the avocado by equilibrating in an environment having a temperature of between about 0–28° F., glazing the entire surface of the avocado by dipping it for about 1½ seconds in an anti-oxidant from the same group as the original dipping and with the anti-oxidant at a temperature of about 30° F., and packaging the glazed avocado in a container having a nitrogen atmosphere with an oxygen content less than about 2%.

3,398,002
UNIVERSAL FOUNTAIN SOLUTION FOR PLANOGRAPHIC PRINTING
Louis E. Bondurant, 23104 Dolorosa St., Woodland Hills, Calif. 91364, and Francis R. Bordeaux, Sunland, Calif.; said Bordeaux assignor to said Bondurant
No Drawing. Continuation-in-part of application Ser. No. 476,204, July 30, 1965. This application June 29, 1967, Ser. No. 649,859
3 Claims. (Cl. 106—2)

A universal fountain solution for planographic printing which solution in general comprises a humectant, a buffer, a glycol ether and an organic solvent in prescribed proportions.

3,398,003
SILVER POLISH-TARNISH RETARDER CONTAINING A DIALKYL DISULFIDE HAVING FROM 8 TO 20 CARBON ATOMS IN EACH ALKYL RADICAL
Verle C. Smith, 1532 E. 36th Place 74105, and James H. Carpenter, 4623 E. 57th St. 74135, both of Tulsa, Okla.
No Drawing. Filed Apr. 26, 1965, Ser. No. 451,070
8 Claims. (Cl. 106—3)

A silver polish and tarnish retarding compound incorporates dialkyl disulfide having the general formula R—S—S—R where R is an alkyl radical having from 8 through 20 carbon atoms.

3,398,004
GLASS COMPOSITION, CONDUCTORS AND COILS INSULATED THEREWITH AND METHOD OF MAKING SAID COMPOSITION
Wesley W. Pendleton, Muskegon, and George W. Ostrander, Muskegon Heights, Mich., assignors to Anaconda Wire and Cable Company, a corporation of Delaware
Filed Jan. 14, 1964, Ser. No. 337,553
36 Claims. (Cl. 106—48)

An electrically insulating glass is made up of CaO, BaO, ZnO, Al_2O_3 and SiO_2. A coating composition contains a suspension of the new glass along with a refractory such as Cr_2O_3. Wire is insulated with this suspension in an organic resin solution and coils are formed from such wire.

To make this coating composition a glass frit is formed and screened through a 200 mesh sieve, mixed into an enamel along with particles of refractory and ball milled for at least 96 hours.

3,398,005
CEMENT COMPOSITION AND PRODUCTS THEREOF
Vincent F. Felicetta and Aaron E. Markham, Bellingham, Wash., assignors to Georgia-Pacific Corporation, Portland, Oreg., a corporation of Georgia
No Drawing. Filed Feb. 24, 1965, Ser. No. 435,082
19 Claims. (Cl. 106—90)

A portland cement composition containing an admixture of sulfonated lignin reacted with from 0.01 to 45 weight percent, based upon the dry solids of the sulfonated lignin-containing material, of alkylene oxide.

3,398,006
CEMENT COMPOSITION AND PRODUCTS THEREOF
Vincent F. Felicetta and Aaron E. Markham, Bellingham, Wash., assignors to Georgia-Pacific Corporation, Portland, Oreg., a corporation of Georgia
No Drawing. Filed Feb. 24, 1965, Ser. No. 435,057
12 Claims. (Cl. 106—90)

A portland cement composition containing an admixture of sulfonated lignin reacted with from 0.01 to 45 weight percent, based upon the dry solids of the sulfonated lignin-containing material, of styrene oxide.

3,398,007
BALLISTIC RECOVERY MEDIUM
Arthur Pillersdorf, Lester P. Kuhn, and Roger-Edgar Bowman, Aberdeen, Md., assignors to the United States of America as represented by the Secretary of the Army
Filed Mar. 3, 1966, Ser. No. 533,376
3 Claims. (Cl. 106—128)

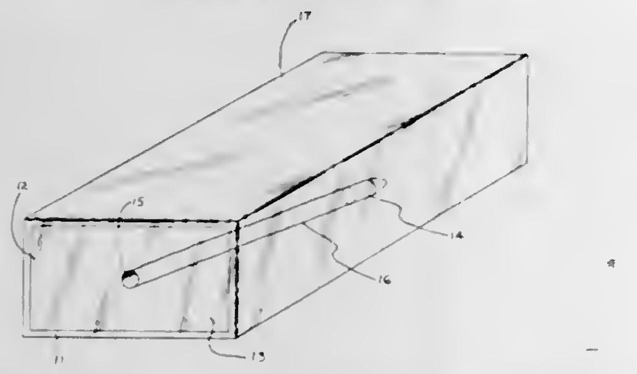

A ballistic recovery medium and process for the preparation thereof consisting of:

Ingredients:	Percent by weight
Glycerin	73–78
Gelatin	10–15
Water	about 10
Methyl cellulose	about 2

3,398,008
GRINDING METHOD
Daniel A. Jacobs and James B. Duke, Metuchen, N.J., assignors, by mesne assignments, to Engelhard Minerals & Chemicals Corporation, Edison, N.J., a corporation of Delaware
No Drawing. Continuation-in-part of application Ser. No. 421,108, Dec. 24, 1964. This application Jan. 16, 1967, Ser. No. 609,353
The portion of the term of the patent subsequent to Apr. 11, 1984, has been disclaimed
10 Claims. (Cl. 106—288)

The particle size of white or pastel mineral pigments or fillers, such as kaolin or talc, is reduced by agitating a dispersed aqueous pulp of the mineral with steel shot in the presence of added caustic. The ground (micronized) pigment or filler is bleached with a bleach reagent, such as a hydrosulfite salt, to eliminate discoloration due to iron stain indigenous to the mineral.

3,398,009
OXIDATION TREATMENT OF CARBON BLACK
Hugh J. Deery, Jamaica Plain, Mass., assignor to Cabot Corporation, Boston, Mass., a corporation of Delaware
Filed Mar. 23, 1965, Ser. No. 442,057
11 Claims. (Cl. 106—307)

1. A novel process for oxidizing carbon black with a nitrogenous oxidizing agent which comprises providing first and second enclosed zones in open communication with each other, maintaining said first zone at temperatures between about 150° F. and about 300° F. and said second zone at temperatures between about 250° F. and about 400° F., charging (a) carbon black into said first zone nad conveying said black from said first zone into said second zone, (b) a nitrogenous oxidizing agent chosen from the group consisting of nitric acids, nitrogen oxides, and mixtures thereof into either zone, and (c) a free oxygen-containing gas into the downstream end of said second zone countercurrent the flow of black to provide a substantially complete purge of the environment about the carbon black outlet from the second zone, said free oxygen-containing gas being charged in an amount sufficient to provide at least a stoichiometric sufficiency of free oxygen to convert substantially all lower nitrogen oxides to nitrogen dioxide and collecting the resulting black product at the downstream end of said second zone provided that the temperature in the second zone is high enough to cause oxidation by products and remaining oxidizing agent to be desorbed from the black.

3,398,010
MASKING COMPOSITION FOR GALVANIZED METAL
Mahlon A. Harvey, Parma, Ohio, and Lawrence E. Helwig, Glenshaw, Pa., assignors to United States Steel Corporation, a corporation of Delaware
No Drawing. Filed Aug. 17, 1964, Ser. No. 390,237
4 Claims. (Cl. 117—5.5)

A method of making a ferrous metal article having only a portion galvanized which involves applying as a shielding coating to a ferrous metal article a mixture comprising boric acid, kaolin and attapulgite clays, thereafter galvanizing the unshielded portion and removing the shielding coating after galvanizing. The application of a coating of boric acid and clay in specified ranges also improves the corrosion resistance of the surface to which it has been applied.

3,398,011
METHOD OF LUBRICATING A COATED MAGNETIC RECORD MEMBER
Guido Nelrotti, New Fairfield, Conn., and Edward Schmidt, Pound Ridge, N.Y., assignors to Reeves Industries, Inc., New York, N.Y.
Filed Sept. 10, 1964, Ser. No. 395,987
14 Claims. (Cl. 117—65.2)

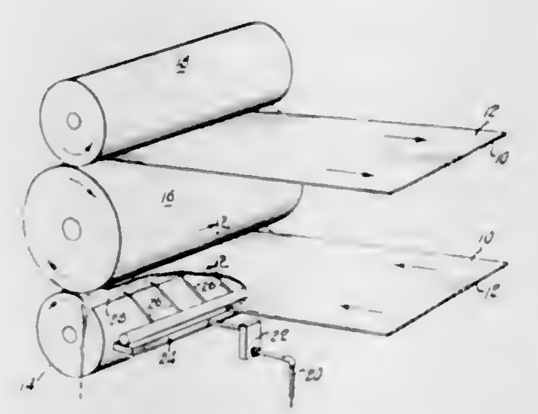

Method of lubricating a coated magnetic record member by application thereto of a lubricant in a carrier liquid and compressive rolling thereof prior to removal of the carrier liquid to leave the lubricant as a residue.

3,398,012
CONTINUOUS PROCESS FOR THE COATING OF PARTICULATE MATERIAL WITH RESIN
Eric Parkes, Solihull, and Anthony Walter Lawrence, Woodsetton, near Dudley, England, assignors to Fordath Engineering Company Limited, West Bromwich, England, a British company
Filed Sept. 8, 1964, Ser. No. 394,775
3 Claims. (Cl. 117—100)

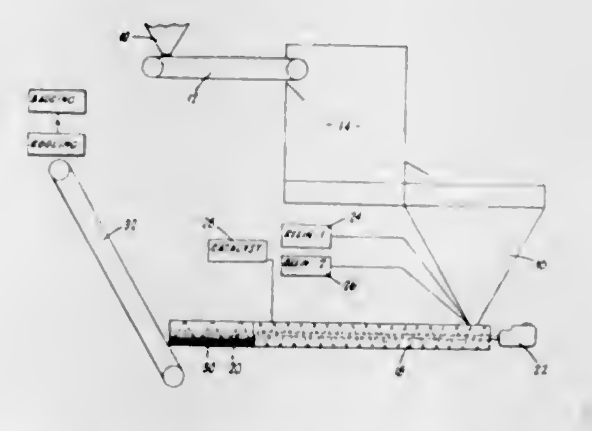

A process for preparing resin-coated sand in which heated sand is fed into a mixer and conveyor unit to which resin is also fed, a curing agent for the resin being subsequently added with continuous mixing and conveying and cooling of the resin coated sand then being effected.

3,398,013
PREPARATION OF FILMS OF BORON CARBIDE
Jerome J. Krochmal, 1641 Layton Drive, Dayton, Ohio 45406; Isadore Shapiro, Los Angeles, Calif. (525 E. Alondra Blvd., Gardena, Calif. 90247); and Charles T. Lynch, 387 Cherrywood, Fairborn, Ohio 45324
Filed July 2, 1965, Ser. No. 469,279
6 Claims. (Cl. 117—106)

A method of forming a layer of B_4C on a substrate, such as a flat surface or a filament, by introducing an inert carrier gas and a carborane into a chamber containing the substrate and heating said carborane at a temperature ranging from 400° C.–1000° C. to effect decomposition of the carborane into B_4C which is deposited on said substrate. Where the carborane is a solid, it is preliminarily vaporized at a low pressure of 1.6 mm. of mercury

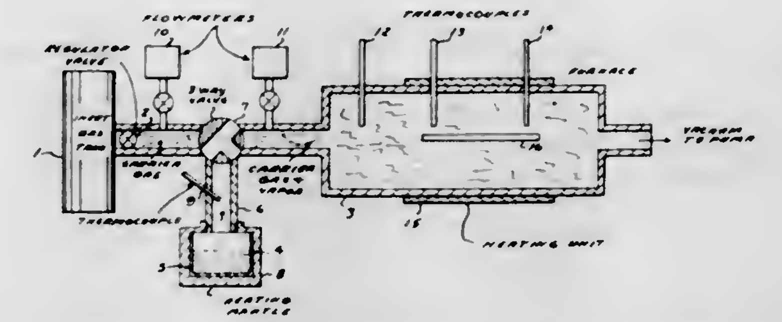

and less before being introduced into the chamber or furnace.

3,398,014
PROCESS FOR MANUFACTURE OF STABILIZED PRESSURE SENSITIVE ADHESIVE
Stanley Turner, Costa Mesa, Calif., assignor, by mesne assignments, to Avery Products Corporation, San Marino, Calif., a corporation of California
Application Aug. 17, 1961, Ser. No. 136,126, now Patent No. 3,300,543, dated Jan. 24, 1967, which is a continuation-in-part of application Ser. No. 685,665, Sept. 23, 1957. Divided and this application Jan. 18, 1967, Ser. No. 632,840
5 Claims. (Cl. 117—111)

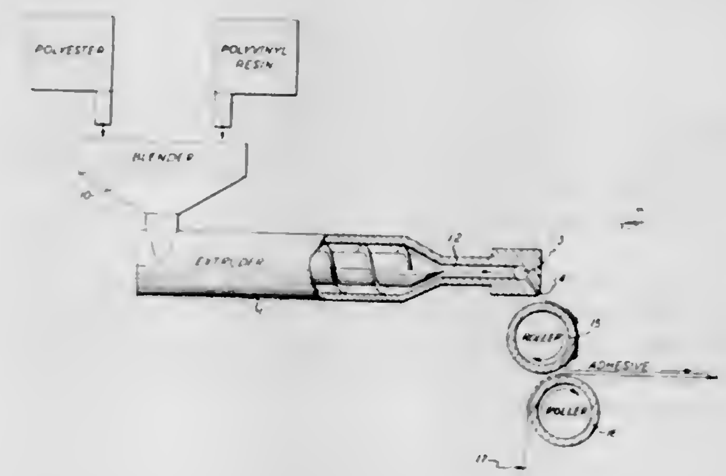

A process for the manufacture of a stabilized pressure sensitive adhesive where a mixture of polyesters and polyvinyl resin containing by weight from 60% to 90% polyesters and from 10% to 40% polyvinyl resin is heated to a temperature from about 140° C. to about 220° C. in an extruder which provides a high shear type of agitation as the mixture passes through the extruder and is continuously extruded at high velocity through an opening for coating on a web surface.

3,398,015
AMYLOSE FILM
Sheldon A. Buckler, Stamford, Conn., and Felix J. Germino, Yorktown Heights, N.Y., assignors to American Machine & Foundry Company, a corporation of New Jersey
No Drawing. Filed Apr. 1, 1964, Ser. No. 356,637
7 Claims. (Cl. 117—118)

Broadly, this invention provides a self-sustaining amylose film wherein at least some of the hydroxyl radicals on the surface are replaced by hydrophobic radicals and there is a relative absence of like hydrophobic radicals beneath the film surface. The invention also covers the method for modifying the surface of amylose films

by treating an amylose film with a compound containing a hydroxyl reactive hydrophobic radical which reacts with the hydroxyl radicals of the amylose film.

3,398,016
COATING AND DRYING THERMALLY SENSITIVE THERMOPLASTIC FILM
Max Goldman, Tonawanda, and Miklos Wallenfels, Buffalo, N.Y., assignors to E. I. du Pont de Nemours and Company, Wilmington, Del., a corporation of Delaware
Filed July 10, 1964, Ser. No. 381,624
10 Claims. (Cl. 117—119.6)

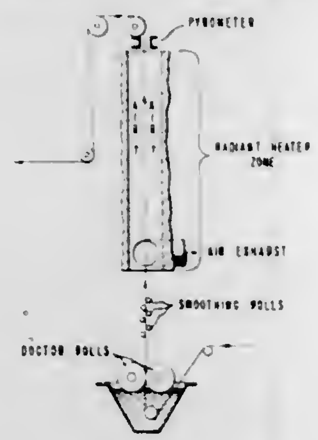

Coating and thereafter drying a thermally sensitive thermoplastic film utilizing radiant heat of specified intensity and countercurrent air flow at low temperature and high velocity.

3,398,017
WATER REPELLENT TREATMENT
Thomas S. Baurain and George J. Quaal, Midland, Mich., assignors to Dow Corning Corporation, Midland, Mich., a corporation of Michigan
No Drawing. Filed Sept. 14, 1964, Ser. No. 396,346
19 Claims. (Cl. 117—123)

An improved process for rendering substrates water repellent, particularly masonry and fibrous substrates, is disclosed. The improvement comprises using polymers of certain acryloxy functional organosilicon compounds as the water repellent agent.

3,398,018
TRANSPARENT FLAT COATED SUBSTRATES
Harold A. Walters, Beaverton, Mich., assignor to The Dow Chemical Company, Midland, Mich., a corporation of Delaware
Filed Sept. 25, 1964, Ser. No. 399,257
9 Claims. (Cl. 117—124)

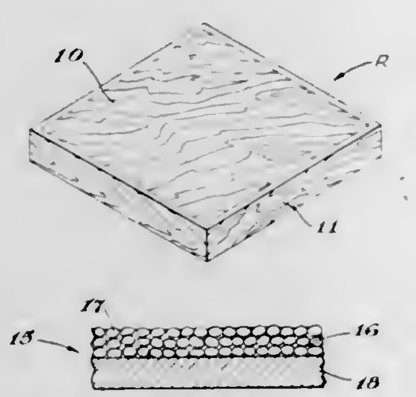

Flat transparent coatings with excellent resistance to burnishing and having self-healing characteristics are obtained by incorporating small transparent plastic spheres in a plastic matrix. The physical properties of the spheres and refractive index difference are particularly significant in obtaining coatings which have optimum properties.

3,398,019
METHOD FOR FIREPROOFING CELLULOSIC MATERIAL
Robert P. Langguth, Overland, and Howard L. Vandersall, Ballwin, Mo., assignors to Monsanto Company, St. Louis, Mo., a corporation of Delaware
No Drawing. Filed Feb. 21, 1963, Ser. No. 260,322
5 Claims. (Cl. 117—138)

1. In a method for producing wood fiber products wherein said product is treated with an aqueous solution of an ammonium phosphate fire retardant and thereafter dried, the improvement comprising treating said wood fiber product, prior to drying, with a decomposition inhibitor of an inorganic ammonium compound which releases ammonia below the decomposition temperature of said fire retardant selected from the group consisting of ammonium carbonates, ammonium chloride, ammonium fluoride and ammonium sulfide, and drying said wood fiber product at temperatures in excess of the decomposition temperatures of said fire retardant, said decomposition inhibitor being used in amounts of retardant to decomposition inhibitor on a weight ratio basis of between about 1:.1 to 1:.5 in order to prevent objectionable discoloration of said fiber product as a result of decomposition of said fire retardant.

3,398,020
HYDROPHOBIC POLYHYDROCARBON SUBSTRATES COATED WITH CYCLOPENTADIENE HOMOPOLYMER
John R. Caldwell, Kingsport, Tenn., assignor to Eastman Kodak Company, Rochester, N.Y., a corporation of New Jersey
No Drawing. Original application Feb. 8, 1961, Ser. No. 87,741, now Patent No. 3,143,422, dated Aug. 4, 1964. Divided and this application Aug. 3, 1964, Ser. No. 387,192
6 Claims. (Cl. 117—138.8)

Cyclopentadiene homopolymers have been found to provide unusually adhesive coatings on hydrophobic polyhydrocarbon surfaces without the necessity of first subjecting the surfaces to modification. The coated hydrophobic polyhydrocarbon surfaces provide good adhesion for coatings such as photographic emulsions and the like. In addition, fibers of hydrophobic polyhydrocarbons coated with the cyclopentadiene homopolymers provide treated fibers having an affinity for dyes.

3,398,021
METHOD OF MAKING THIN FILM FIELD SUSTAINED CONDUCTIVITY DEVICE
Norman H. Lehrer, Pacific Palisades, and Richard D. Ketchpel, Malibu, Calif., assignors to Hughes Aircraft Company, Culver City, Calif., a corporation of Delaware
Filed Mar. 23, 1965, Ser. No. 442,106
5 Claims. (Cl. 117—200)

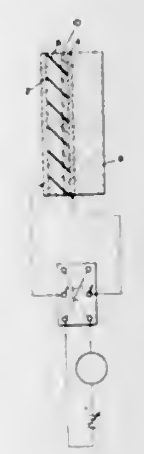

1. The method of making a field sustained conductivity device comprising the steps of: disposing a layer of cadmium sulfide in contact with an aluminum electrode member, and forming a barrier region in said layer of cadmium sulfide by heating said aluminum electrode member and said layer of cadmium sulfide at a temperature of from 200° to 400° C. for at least two hours in a sulfur-containing atmosphere.

3,398,022
METHOD OF CONTINUOUSLY CLEANING ROLLS IN THE PROCESSING OF COIL, SHEET AND PLATE MATERIAL
Frederick K. Maust, Queens Village, N.Y.; Hedwig Maust and John Grill, administrators of said Frederick K. Maust, deceased, assignors to Hedwig Maust, Queens Village, N.Y.
Filed Sept. 18, 1962, Ser. No. 224,342
10 Claims. (Cl. 134—6)

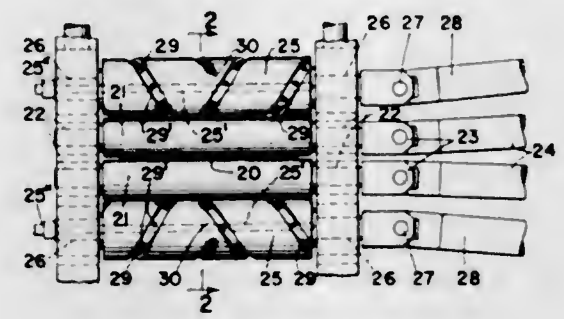

1. The method of continuously cleaning the surface of a metal work roll in a roller leveler for strip material or during the rolling process in a rolling mill, said method comprising maintaining metal wiper roll means of different diameter than said work roll in operative engagement with said work roll substantially throughout the operative length of the work roll, said wiper roll means having helical grooves along the entire operative face thereof, some of said grooves being left-hand and some right-hand, and rotating said wiper roll means and said work roll at substantially the same circumferential speed to produce rolling engagement between the work roll and said wiper roll means to thereby cause a progressive wiping and cleaning action by the edges of said grooves along the surface of said work roll, thus gathering extraneous particles adhering to the work roll into said grooves during said rolling engagement.

3,398,023
SIGHT GLASS CLEANING
John B. Jacobsen and William R. Carpenter, Bowling Green, Ky., assignors to Detrex Chemical Industries, Inc., Detroit, Mich., a corporation of Michigan
Filed Jan. 21, 1964, Ser. No. 339,255
2 Claims. (Cl. 134—22)

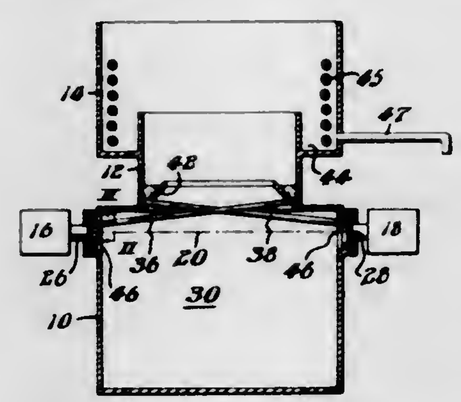

1. In the operation of a vessel through which wave energy is passed for inspection or control purposes, said energy passing through the planes of the walls at opposed locations, the method of maintaining the interior surfaces of the wall planes at the energy passage points clean and free of residue, said method comprising directing a supply of compatible cleaning fluid to the interior surfaces of the wall planes at the energy passage points for interposing said clean compatible fluid between the vessel wall and the normal contents of the vessel.

3,398,024
BATTERY PLATES
Stanley Charles Barnes, Kenilworth, and John Armstrong, London, England, assignors to Joseph Lucas (Industries) Limited, Birmingham, England
No Drawing. Filed Dec. 30, 1965, Ser. No. 517,784
5 Claims. (Cl. 136—34)

In the formation of a battery plate, a lead grid is pasted in the usual way, except that before the pasting operation, the grid is dipped in ammonium persulfate, sodium persulfate, or sodium perborate solution which will be reduced in preference to oxygen when the paste is added.

3,398,025
NICKEL-CADMIUM BATTERY ELECTRODES
Melvin H. Gottlieb, Wheaton, Md., assignor to Bell Telephone Laboratories, Incorporated, New York, N.Y., a corporation of New York
Filed Oct. 14, 1965, Ser. No. 496,009
4 Claims. (Cl. 136—120)

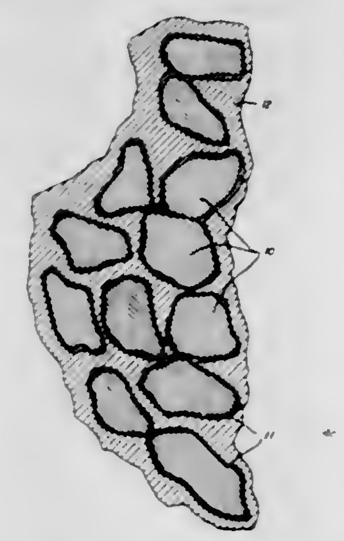

1. A process for the manufacture of negative electrodes for nickel-cadmium cells which comprises producing a nickel sinter plaque consisting essentially of nickel having a porosity of 70 percent to 90 percent, coating said nickel plaque with mercury and impregnating the coated nickel sinter with cadmium hydroxide to activate the electrode.

3,398,026
ELECTROCHEMICAL CELL INCORPORATING A UNIDIRECTIONAL VALVE
Henri Georges André, Montmorency, France, assignor to Yardney International Corporation, New York, N.Y., a corporation of New York
Continuation of application Ser. No. 291,695, July 1, 1963. This application Aug. 1, 1966, Ser. No. 569,536
Claims priority, application France, July 3, 1962, 902,812
7 Claims. (Cl. 136—178)

A valve is disclosed which is particularly suited for incorporation in a rechargeable or storage cell and which provides for the unidirectional passage of gas between regions having a gas pressure differential thereacross. The valve comprises a partition means interposed between the regions of high and low pressure and having at least one aperture therein. A layer of viscous medium i.e., a high vacuum grease is applied along the partition means, at least along the side thereof exposed to the low pressure medium. The partition means normally blocks

the aperture but is displaceable therefrom upon an increase in the pressure in the high pressure region above a predetermined level, permitting gas to pass from the high pressure region to the low pressure region. The

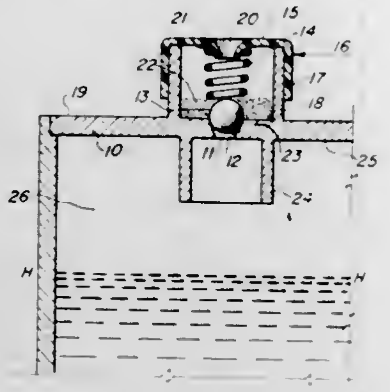

viscous grease is selected so that it will have a sufficient surface tension and shape retentiveness to reform a film on the partition means serving to again block the aperture.

3,398,027
PYROMETRIC PROBE
André Lajarrige, Le Creusot, and Jacques Léger, Saint-Julien-sur-Dheune, France, assignors to Societe des Forges et Ateliers du Creusot, Paris, France, a company of France
Filed Nov. 22, 1965, Ser. No. 508,982
Claims priority, application France, Nov. 23, 1964, 995,960
5 Claims. (Cl. 136—234)

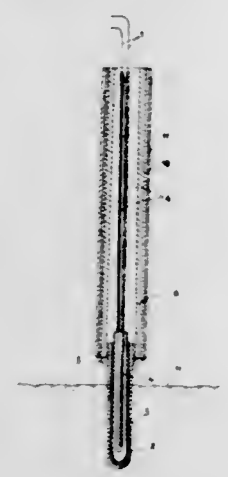

1. A pyrometric probe for continuously measuring the temperature of a liquid melt during processing in a melting furnace, comprising a vertical tube of sillimanite closed at its lower end, a thermocouple mounted within said tube, wires leading from said thermocouple, a quartz protective sheath surrounding said tube and immersed in the liquid melt, a steel support tube connected to and coaxial with said sheath above the level of immersion of said sheath in the melt and a protective layer of asbestos on said support tube.

3,398,028
PROCESS OF FORMING A RED, CUPROUS OXIDE COATING ON COPPER
John A. Scott, North Haven, Conn., assignor to Olin Mathieson Chemical Corporation, a corporation of Virginia
No Drawing. Filed Mar. 31, 1965, Ser. No. 444,426
9 Claims. (Cl. 148—6.31)

The method of forming a red, cuprous oxide coating on copper which comprises heating a copper base alloy in an inert atmosphere at a temperature of from 1100 to 1900° F. and cooling said heated alloy to a minimum of 200° F. in an oxygen deficient zone.

3,398,029
METHOD OF MAKING SEMICONDUCTOR DEVICES BY DIFFUSING AND FORMING AN OXIDE
Matami Yasufuku, Yokohama-shi, Toyosaku Kawamura, Kanagawa-ken, and Tsuneo Hayashi, Tokyo, Japan, assignors to Fujitsu Limited, Kawasaki, Japan, a corporation of Japan
Filed Oct. 5, 1964, Ser. No. 401,735
Claims priority, application Japan, Oct. 3, 1963, 38/53,300
5 Claims. (Cl. 431—152)

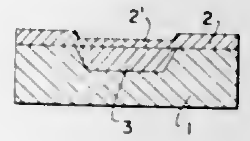

1. The method of producing a silicon semiconductor device which comprises forming a silicon dioxide layer on the surface of a silicon body while diffusing a doping impurity into a portion of said silicon body, removing the silicon-dioxide layer and thereafter forming a new silicon-dioxide layer at a temperature less than that temperature at which the diffusion took place and adding a small amount of doping material into said new silicon dioxide layer to minimize surface channel effect.

3,398,030
FORMING A SEMICONDUUCTOR DEVICE BY DIFFUSING
Douglas Frederick Ridley, Solihull, England, assignor to Joseph Lucas (Industries) Limited, Birmingham, England
Filed Jan. 6, 1966, Ser. No. 519,046
Claims priority, application Great Britain, Jan. 8, 1965, 884/65
1 Claim. (Cl. 148—187)

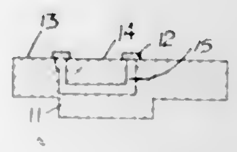

A p-n-p or n-p-n structure is manufactured in a single diffusion step by masking and etching a slice to form a raised portion on one face of the slice. Then the other face of the slice is faced to mask, which is approximately opposite the raised portion, and divides the opposite face of the slice into an inner unmasked region which lies entirely within the area of the raised portion and an outer unmasked region. An impurity of the opposite conductivity type to the slice is then diffused in both sides thereof, the result is a three-layer device.

3,398,031
CORROSION INHIBITORS FOR AQUEOUS PERCHLORIC ACID
Clyde J. Poulin, Phoenix, Ariz., and George Rice, Montclair, N.J., assignors, by mesne assignments, to the United States of America as represented by the Secretary of the Navy
No Drawing. Filed July 21, 1967, Ser. No. 655,247
10 Claims. (Cl. 149—109)

A method for inhibiting the metal corrosive properties of an aqueous perchloric acid solution comprising admixing with the acid solution, an inhibiting reagent such as chloral hydrate, trichloroacetic acid or hydrogen fluoride. A non-corrosive aqueous perchloric acid solution prepared by the foregoing method.

3,398,032
METHOD OF MAKING CERMET RESISTORS BY ETCHING
Reinhard Glang, Poughkeepsie, and Arthur E. Lessor, Jr., Owego, N.Y., assignors to International Business Machines Corporation, Armonk, N.Y., a corporation of New York
Filed Nov. 27, 1964, Ser. No. 414,195
8 Claims. (Cl. 156—5)

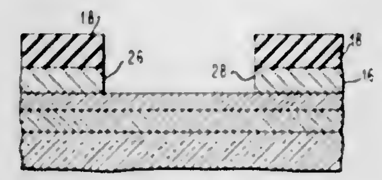

A cermet resistor structure is built upon a silicon material base by depositing on the base a cermet formed by a chromium-silicon monoxide mixture, with the chromium ingredient being substantially more than 50 atomic percent of the mixture. A conductive film comprising copper with an admixture of chromium or aluminum is deposited over the cermet, and then portions of the conductor film are etched away by use of an etchant which attacks copper but does not substantially attack the admixed metal. Then, portions of the cermet are etched away by an etchant which attacks chromium but which does not substantially attack the silicon base material.

3,398,033
METHOD OF ETCHING SILICON CARBIDE
Leigh J. Haga, Bay City, and Thomas N. Tucker, Freeland, Mich., assignors to Dow Corning Corporation, Midland, Mich., a corporation of Michigan
No Drawing. Filed Feb. 26, 1965, Ser. No. 435,674
2 Claims. (Cl. 156—17)

A method of removing silicon carbide from a silicon surface by etching is disclosed. The silicon carbide is heated and then exposed to a halogen-oxygen mixture. This mixture causes deterioration of the silicon carbide and tends to make it porous. Treatment by HF-HNO_3 etching removes the remaining silicon carbide from the silicon after the silicon carbide has become porous.

3,398,034
PROCESS AND MACHINE FOR MAKING ADHESIVE STRIP PRODUCTS
Horace B. Odell, Wellesley, Mass., assignor to The Odell Co., Watertown, Mass., a corporation of Massachusetts
Filed Feb. 9, 1965, Ser. No. 431,286
8 Claims. (Cl. 156—203)

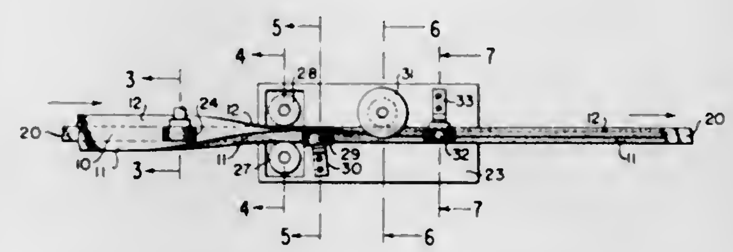

Process of making of sheet material a two-ply adhesive fastener having oppositely exposed external faces of substantially the same adhesive area and oppositely disposed internal non-adherent contacting faces, the process being characterized by folding edge zones of a tape while the body of the tape is temporarily adhered to a flat conveyor belt.

3,398,035
THERMOLAMINATION OF PLASTIC SHEET TO FOAM SUBSTRATES
Kenneth J. Cleereman and Donald J. Dirkse, Midland, Mich., assignors to The Dow Chemical Company, Midland, Mich., a corporation of Delaware
Filed Nov. 5, 1962, Ser. No. 235,387
12 Claims. (Cl. 156—244)

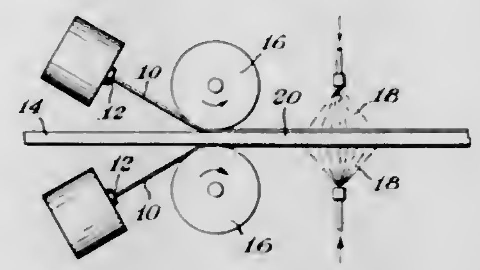

1. A method for laminating a sheet of thermoplastic film to a compatible substantially unheated temperature frail plastic foam substrate, said method comprising the steps of feeding said sheet in a heated condition adjacent said substrate, pressing said sheet and substrate together, and simultaneously cooling both sides of said sheet and substrate simultaneously with said pressing to form a laminate substantially free of distortion.

3,398,036
PROCESS OF MAKING SHEETS FOR PHOTO ALBUMS OR THE LIKE
Eric A. Viesturs, 14 Cottage St., East Norwalk, Conn. 06855
Original application May 17, 1966, Ser. No. 550,673. Divided and this application June 5, 1967, Ser. No. 643,696
5 Claims. (Cl. 156—267)

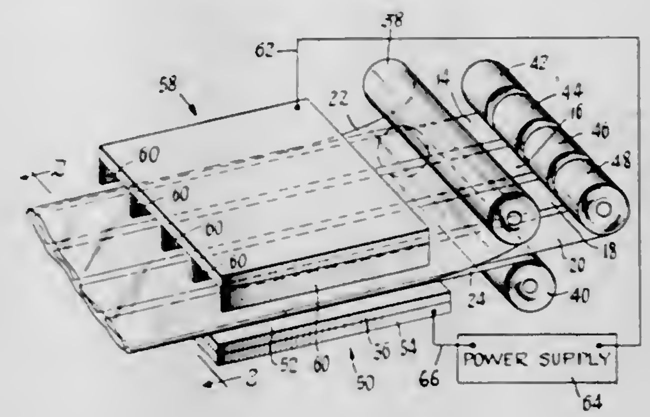

A continuous production method of making filler leaves for an album, book or the like, which includes the process of simultaneously feeding two superposed heat-sealable plastic sheets and a plurality of interposed edge-to-edge but spaced, parallel filler webs, all as a flat assemblage, to a sealing station, and at said station heat sealing the plastic sheets together along straight lines not only at the side edges of the sheets but also at locations inward of said side edges, between the filler webs.

3,398,037
CONTAINER MANUFACTURING MACHINE
William Binford Elam, Oakland, N.J., and Stephen Frederick Jensen, New York, N.Y., assignors to American Can Company, New York, N.Y., a corporation of New Jersey
Filed Dec. 10, 1963, Ser. No. 329,446
4 Claims. (Cl. 156—428)

1. A supply roll unwind stand for supplying web stock being fed onto a mandrel to form a spirally wound tube, said unwind stand comprising a pair of spaced fixed supports, a moveable base perpendicular to and mounted on

said fixed supports, a web treating mechanism mounted on said base, a supply roll rotatably mounted on said base for feeding web stock through said web treating mechanism and onto said mandrel, a pair of threaded bolts each connected at one end with said moveable base for pivotal movement with respect thereto in a horizontal plane and at the other end connected with said standard for pivotal movement with respect thereto in a horizontal plane, each of said bolts being threadedly connected at one of said

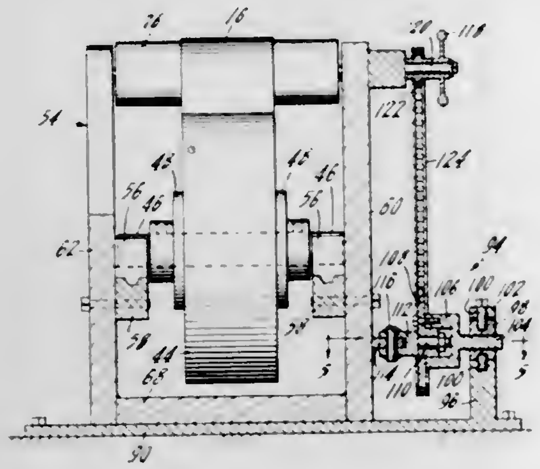

ends so that when both of said bolts are rotated an equal number of turns in the same direction said moveable base is moved laterally and over said fixed supports to change the position on said mandrel at which said web stock is wound thereon and when said bolts are rotated in a different direction or an unequal number of turns in the same direction said moveable base is pivoted about a vertical axis to change the angle at which said web stock is fed onto said mandrel.

3,398,038
BOOK COVER TURNING-IN MACHINE
Jay Crawford, 2249 14th St., Akron, Ohio 44314
Filed Oct. 24, 1965, Ser. No. 504,426
4 Claims. (Cl. 156—492)

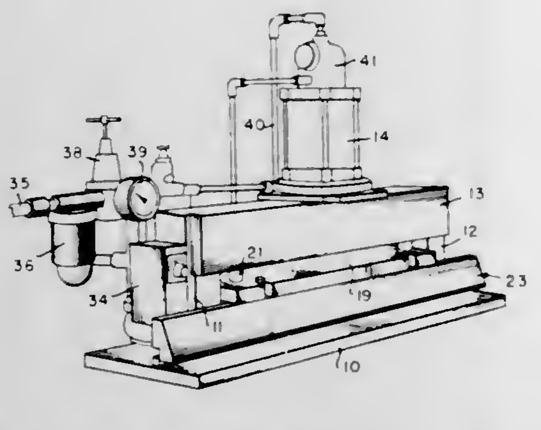

1. A turning-in machine for folding a cloth cover over one or more pieces of binder's board in the forming of a hard back book cover comprising a base, a crosshead supported by said base, fluid cylinder means carried by said crosshead, said fluid cylinder means having an adjustable piston rod, a frame mounted on said piston rod, a folder bar removably carried by said frame, electrically operated valve means for introducing fluid under pressure into said cylinder means, an adjustable pressure valve controlling the flow of fluid under pressure from a suitable source to said electrically operated valve means to operate said cylinder at a predetermined pressure, an adjustable pressure relief valve for relieving the pressure when said predetermined pressure has been reached, and trigger means for operating said electrically operated valve, whereby when a hard back cover is inserted within said machine said folder bar will be extended to apply a predetermined pressure to the cover and thereafter will return to its initial position.

3,398,039
EQUIPMENT FOR MAKING LAMINATIONS FOR X-RAY ANTIDIFFUSING SCREENS
Rudolf Klemm, Fritz Wagner, Heinz Ehrentraut, and Werner Hempel, Dresden, and Kurt Schumann, Radebeul, Germany, assignors to VEB Transformatoren- und Rontgenwerk Dresden, Dresden, Germany
Filed Aug. 19, 1965, Ser. No. 481,049
14 Claims. (Cl. 156—510)

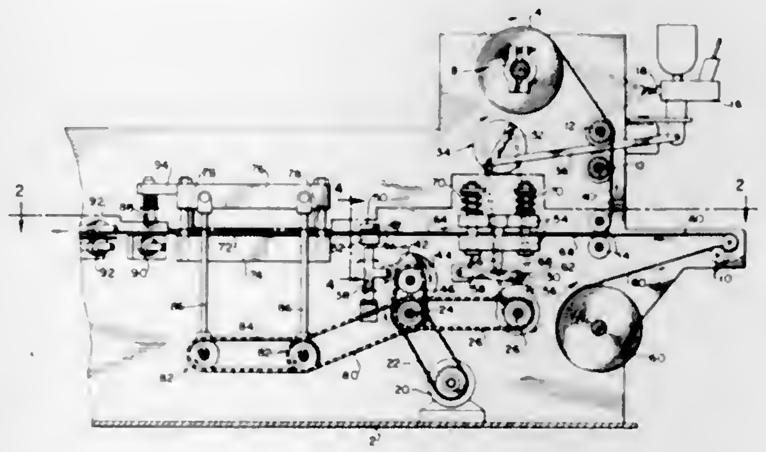

1. An equipment for making laminations for X-ray antidiffusing screens, comprising, in combination, a frame, two supply rolls journaled in said frame, one for a band-shaped lead-foil material and the other for a band-shaped pressboard-strip material, a pair of deflecting rollers for guiding at least one of said materials, gluing means for applying an adhesive to one of said materials, calender means for guiding said materials into a substantially parallel, superimposed path, planar pressing means for uniting said materials into a composite, united material band, reciprocating transport means for advancing said material band, and cutting means for forming individual laminations from said material band.

3,398,040
VACUUM COATED PRODUCT
Lloyd R. Allen, Belmont, and Robert W. Steeves, Nahant, Mass., assignors to National Research Corporation, Cambridge, Mass., a corporation of Massachusetts
Filed Apr. 1, 1965, Ser. No. 444,529
20 Claims. (Cl. 161—45)

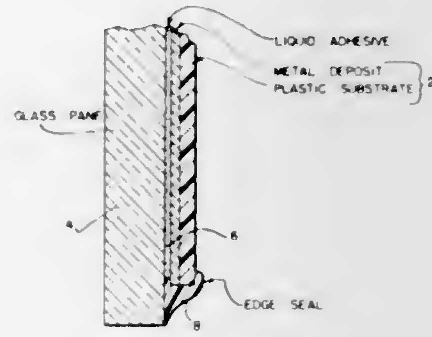

A heat rejecting window including a clear plastic film, a layer of window glazing, a semitransparent layer of metal vacuum deposited on the inner surface of said film, and a thin layer of transparent organic liquid securing said plastic film to said glazing by surface tension.

3,398,041
WRAPPER MATERIAL
Roy E. Ferree, Valencia, Pa., assignor to Eastern Splash Mats Inc., Valencia, Pa.
Filed June 22, 1966, Ser. No. 563,330
1 Claim. (Cl. 161—113)

A wrapping material in elongated sheet form, such as in a roll, for packaging or fabricating into containers. The wrapping material comprises an elongated transparent plastic film sandwiched between two superimposed elongated sheets of metallic foil having registering holes cut out therefrom in rows to enable viewing therein.

3,398,042
LEATHER LAMINATES
Julius Peter Odenthal, Bezirk Cologne, and Erwin Müller, Leverkusen, Germany, assignors to Farbenfabriken Bayer Aktiengesellschaft, Leverkusen, Germany, a German corporation
No Drawing. Filed Jan. 2, 1963, Ser. No. 248,860
Claims priority, application Germany, Jan. 5, 1962, F 35,720
7 Claims. (Cl. 161—190)

1. Leather bonded to a porous substrate by means of an adhesive, said adhesive when set having vapor and air permeability characteristics similar to that of natural leather, and comprising the non-foaming reaction product of a water-soluble organic dihydroxy compound selected from the group consisting of polyethylene oxides, polyacetals and polyesters, said organic compound having a molecular weight within the range of from about 500 to about 3000 and an hydroxyl number within the range of from about 225 to about 35 with less than an equivalent quantity of polyisocyanate than that required to react with all of the hydroxyl groups of the water-soluble organic dihydroxy compound.

3,398,043
METHOD OF BONDING SILICONE ELASTOMERS TO ORGANIC ELASTOMERS AND PRODUCT THEREOF
Delmar C. Youngs, Midland, Mich., assignor to Dow Corning Corporation, Midland, Mich., a corporation of Michigan
No Drawing. Filed July 1, 1965, Ser. No. 468,960
10 Claims. (Cl. 161—190)

Silicone elastomers are bonded to organic elastomers through an intermediate layer comprising a mixture of an organic isocyanate and a room temperature vulcanizable silicone elastomer stock.

3,398,044
BONDING OF ORGANIC RESINS OR RUBBERS TO INORGANIC SUBSTANCES
Edwin P. Plueddemann, Midland, Mich., assignor to Dow Corning Corporation, Midland, Mich., a corporation of Michigan
No Drawing. Filed Feb. 1, 1965, Ser. No. 429,667
18 Claims. (Cl. 161—193)

Process of bonding an organic polymer such as thermoplastic resins to an inorganic substrate such as siliceous materials imparting no discoloration to said resins and improving the strength between the two members giving hydrolytic stability.

An illustrative example being the treatment of glass cloth with a partial hydrolyzate of nitrophenyltriethoxysilane and drying it at 230° F.; laminates formed thereby are interspersed with films of thermoplastic at 65 p.s.i. at 250° C. for one-half hour.

3,398,045
BONDING RUBBERY POLYOLEFINS TO ORGANIC MATERIALS
Robert E. Clayton and Byron M. Vanderbilt, Westfield, N.J., assignors to Esso Research and Engineering Company, a corporation of Delaware
No Drawing. Filed Jan. 2, 1963, Ser. No. 248,904
17 Claims. (Cl. 161—208)

8. An article comprising a cured saturated rubbery copolymer of ethylene and a higher alpha olefin bonded to a fibrous substance selected from the group consisting of cellulose, cellulosic derivatives and nylon by means of an organo oxyl silane on the surface of said fibers, said organo oxyl silane having at least one function that is reactive with said copolymer.

3,398,046
CHLORINATED POLYETHYLENE ADHESIVE COMPOSITIONS FOR BONDING PAPER TO NON POROUS SURFACES
John Lewin Fowler and Francis Raymond Sherliker, Widnes, England, assignors to Imperial Chemical Industries Limited, London, England, a corporation of Great Britain
No Drawing. Continuation of application Ser. No. 129,227, Aug. 4, 1961. This application Oct. 2, 1967, Ser. No. 672,403
Claims priority, application Great Britain, Aug. 26, 1960, 29,518/60
5 Claims. (Cl. 161—218)

A semi-permanent heat-sealing adhesive consisting essentially of chlorinated polyethylene, the pre-chlorinated polyethylene having a molecular weight within the range of 20,000 to 30,000 and the chlorinated polyethylene containing between 43% and 48% by weight of chlorine. The adhesive is applied to paper sheet for semi-permanent bonding to a non-porous solid surface, e.g. metal or resin sheet, which needs to be protected as, for instance, during transit. The paper sheet may be readily and cleanly removed from the non-porous surface when protection is no longer needed.

3,398,047
PITCH PREVENTION BY ADDITION OF LIGAND AND ORGANIC SULFONATE
Raymond J. Michalski, Riverdale, Ill., assignor to Nalco Chemical Company, Chicago, Ill., a corporation of Delaware
No Drawing. Filed Oct. 8, 1964, Ser. No. 402,628
7 Claims. (Cl. 162—48)

This invention deals with treating pulp and paper mill systems to prevent the deposition of pitch in such systems. This is achieved by treating these systems with a composition consisting of a blend of a ligand and an organic sulfonate.

3,398,048
PROFILE-CONTROLLING GRATING ASSEMBLY
Kenneth B. Latimer, Westport, Conn., assignor to Time, Incorporated, New York, N.Y., a corporation of New York
Filed Aug. 20, 1965, Ser. No. 481,174
8 Claims. (Cl. 162—203)

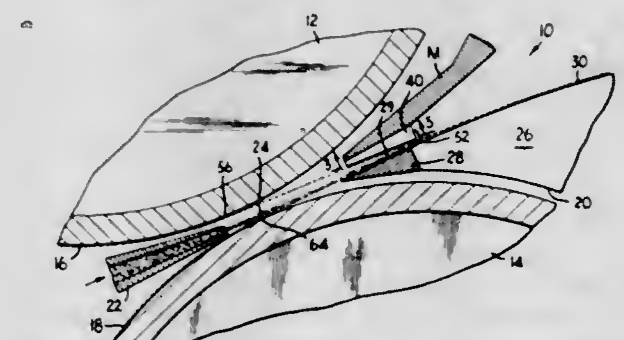

In a twin-wire paper-making machine having upper and lower breast rolls and a curved forming box, a grating

assembly of short blades is provided for lightly contacting the upper forming wire to define its transverse profile and facilitate control of the transverse basis-weight variation of a paper web made on the machine.

3,398,049
PLURAL ARTICLE MOLDING MACHINE
Walter H. Randall, Waterville, Maine, assignor to Keyes Fibre Company, Waterville, Maine, a corporation of Maine
Filed Sept. 8, 1965, Ser. No. 485,771
5 Claims. (Cl. 162—390)

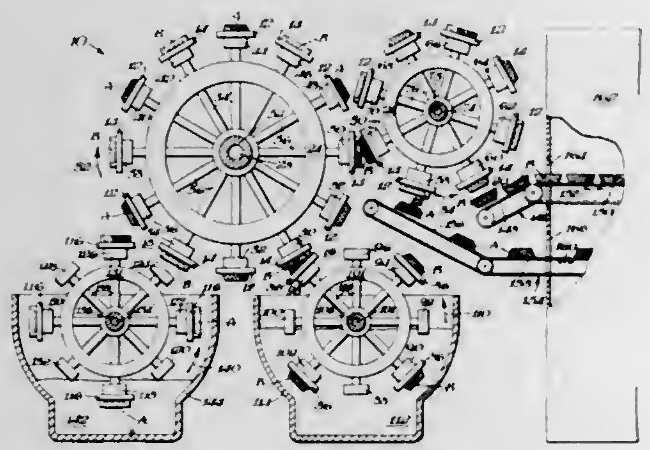

1. A pulp molding machine comprising a first set of plural transfer dies and a second set of plural transfer dies, the individual dies of the two sets being mounted in alternating fashion in a single endless line for shifting motion along a predetermined orbital path past four spaced article transfer stations, means at the first station for transferring molded articles seriatim from first open-face molding die means to the individual transfer dies of one of the sets as the dies shift past the first station, means at the second station for transferring molded articles seriatim from second open-face molding die means to the individual transfer dies of the other set as the dies shift past the second station, means at the third station for transferring articles to a first dryer conveyor from the transfer dies of one of the sets as the individual dies shift past the third station, and means at the fourth station for transferring articles to a second dryer conveyor from the transfer dies of the other set as the individual dies shift past the fourth station whereby molded articles from one of the molding die means are transferred along portions of the orbital path to one of the dryer conveyors and molded articles from the other molding die means are transferred along portions of the same orbital path to the other dryer conveyor.

3,398,050
NUCLEAR REACTOR SYSTEM
John G. Yevick, Rockville, Md., and Edward F. Brill, Oconomowoc, Wis., assignors, by mesne assignments, to Atomic Power Development Associates, Inc., Detroit, Mich., a corporation of New York
Filed Jan. 7, 1966, Ser. No. 519,235
9 Claims. (Cl. 176—17)

A nuclear reactor having a first region which contains a reactor core and blanket portions and a superadjacent region which is a core decay region. A plurality of liner tubes are provided, each of which contain subassemblies. Each of the tubes have a substantially constant cross-sectional area throughout the portion in the first region, and a larger second substantially constant cross-sectional area throughout the portion in the second region, and means are provided for moving selected subassemblies from the first

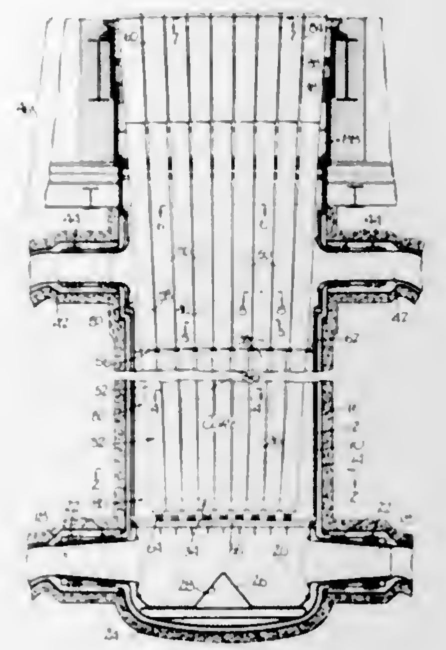

region to the second region, as well as means for retaining the subassemblies within the second region.

3,398,051
HETEROGENEOUS ATOMIC REACTOR
Jonas Leonard Seltorp, Skarmarbrinksvagen 1, Stockholm-Enskede, Sweden
Continuation-in-part of application Ser. No. 369,047, Feb. 3, 1964. This application Sept. 9, 1966, Ser. No. 578,193
Claims priority, application Sweden, Feb. 6, 1963, 1,314/63
3 Claims. (Cl. 176—45)

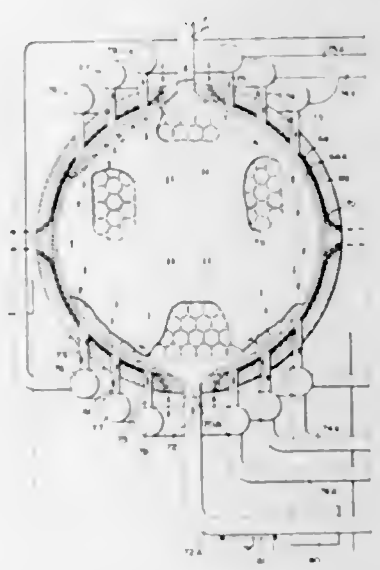

The invention relates to a heterogeneous reactor with a substantially spherical reactor tank having parts wherein the neutron flux is strong and parts wherein the neutron flux is of less strength. The reactor fuel is easily replaceable and rearrangeable so as to reach a high and smooth burn. A molten coolant carries fuel elements in the shape of spherical bodies containing fuel in a partly molten state. Coolant channels communicate with spherical spacing within the bodies. The specific gravity of the fuel bodies is at least substantially equal to that of the coolant. Diametrically opposite sections of the reactor tank are provided with connections divided into at least two groups. One central group has inlets and outlets for said cooling medium positioned diametrically opposite to each other which central group has a flow-through direction of said cooling medium always the same, except when

performing fuel exchange. A second group of connections is placed round said central group. Coolant flow-through direction may be reversed through the second group of connections. In running state the entire cross-section of the reactor is flowed through by the cooling medium in a parallel flow to ensure that the fuel elements are kept in a fixed position in the tank by a hydrodynamic pressure. In a fuel rearrangement state, when the flow-through direction through the second group of connections is reversed the cooling medium moves in a whirling motion in said tank to rearrange the fuel elements in a transport cycle from the central part of the tank, where the neutron flux is high to more peripherically situated parts, where the neutron flux is lower.

3,398,052
NUCLEAR FUEL ELEMENT
Franz Jeitner, Karl Reinhart, and Jürgen Semmler, Meitingen uber Augsburg, Germany, assignors to Arbeitsgemeinschaft Versuchs-Reaktor AVR G.m.b.H., Dusseldorf, Germany, a corporation of Germany
Filed Nov. 10, 1965, Ser. No. 507,144
Claims priority, application Germany, Feb. 12, 1965, A 48,383
20 Claims. (Cl. 176—71)

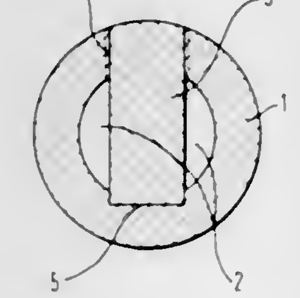

A spherical nuclear reactor fuel element. The spherical body of moderator material has an inner hollow of rounded shape concentric to the spherical surface for receiving nuclear fuel. An insert rod of moderator material is disposed in the hollow. The rod has a longitudinal axis and a surface symmetrical with respect to the axis and forms with the spherical body a ring-shaped interspace also symmetrical with respect to the axis.

3,398,053
SPACER FOR BOX-SHAPED NUCLEAR FUEL ELEMENT
Gerald Huber, Diethelm Knödler, and Hans Kröpfl, Erlangen, Germany, assignors to Siemens Aktiengesellschaft, Erlangen, Germany, a corporation of Germany
Filed Sept 1, 1966, Ser. No. 576,618
Claims priority, application Germany, Sept. 3, 1965, S 99,223
8 Claims. (Cl. 176—78)

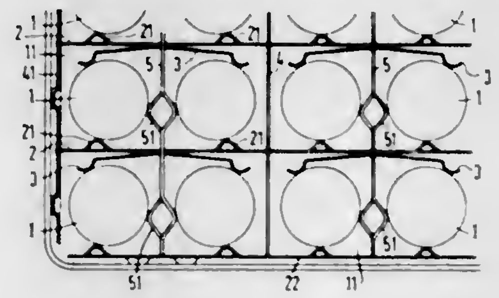

Spacer for fuel rods received in respective mesh defined by intersecting crosspieces of structural material in a lattice frame forming, with a perforated outer wall of structural material, a box-shaped nuclear fuel element, includes two rigid structural elements and a loose, resilient structural element located in each of the mesh.

3,398,054
MICROBIOLOGICAL TRANSFORMATIONS OF STEROLS
Claude Vezina, Oka, Quebec, and Kartar Singh, Beaconsfield, Quebec, Canada, assignors to American Home Products Corporation, New York, N.Y., a corporation of Delaware
No Drawing. Filed Nov. 9, 1965, Ser. No. 509,258
2 Claims. (Cl. 195—51)

Estrone is prepared by microbiological transformation from 19-hydroxycholesterol-3-acetate, 19-hydroxysitosterol-3-acetate, 19-hydroxy-4-sitosten-3-one and 3β,19-dihydroxycholest-5-ene by incubation with the microorganism in the presence of cholest-4-en-3-one as inducer steroid. Similarly 6,19-oxidoandrost-4-ene-3,17-dione is prepared from 6,19-oxidocholest-4-en-3-one and 3β-acetoxy-5α-bromo-6β,19-oxidocholestane. Microorganisms utilizable are certain strains of *Corynebacterium simplex, Bacterium cyclooxydans, Bacillus sphaericus* and Arthrobacter species.

3,398,055
SEPARATION AND PURIFICATION OF CELLULASE
Charles F. Bruno, East Brunswick, N.J., assignor, by mesne assignments, to E. R. Squibb & Sons, Inc., New York, N.Y., a corporation of Delaware
No Drawing. Filed Sept. 16, 1965, Ser. No. 487,901
8 Claims. (Cl. 195—66)

Cellulase produced by submerged cultivation of cellulase producing microorganisms is recovered from the medium by adsorption and elution from untreated or, preferably with alkali modified cotton.

3,398,056
PROCESS FOR PRODUCING LYSOSTAPHIN BY FERMENTATION
Walter Anthony Zygmunt and Henry Polk Browder, Evansville, Ind., assignors to Mead Johnson & Company, Evansville, Ind., a corporation of Indiana
Filed July 10, 1964, Ser. No. 381,684
8 Claims. (Cl. 195—80)

1. In a fermentation process for the production of lysostaphin in which a strain of the organism *Staphylococcus staphylolyticus* is cultivated on an aqueous nutrient medium comprised of carbon- and nitrogen-supplying nutrients, the improvement which comprises employing at least 4% by weight of enzymatically hydrolyzed casein as nitrogen-supplying nutrient in an aqueous nutrient medium having a pH in the range pH 6.5 to pH 8.5.

3. In a fermentation process for the production of lysostaphin in which a strain of the organism *Staphylococcus staphylolyticus* is cultivated on an aqueous nutrient medium comprised of carbon- and nitrogen-supplying nutrients, the improvement which comprises employing at least about 0.5% of a carbon-suplying nutrient selected from the group consisting of glycerol, mannose, and galactose and pH 6.5 to pH 8.5.

3,398,057
PROCESS FOR PRODUCING TETRACYCLINE
Enzo Zannini, Ermanno Piacenza, and Giuseppe Fabbri, Milan, Italy, assignors to Ankerfarm S.p.A., Milan, Italy, a corporation of Italy
No Drawing. Filed Dec. 9, 1963, Ser. No. 329,222
Claims priority, application Italy, Oct. 19, 1963, 21,465/63
2 Claims. (Cl. 195—80)

A process for forming tetracycline through the action of the microorganism ATCC 15299 on a nutrient medium containing an aqueous extract of *Zea mays* and strontium carbonate, and having a pH of between 5.7 to 7.0 after the medium has been sterilized.

3,398,058
PROCESS AND APPARATUS FOR CARBONIZING FUEL
Carl Campbell, Roscoe, N.Y. 12776
Filed Aug. 20, 1963, Ser. No. 303,271
12 Claims. (Cl. 201—15)

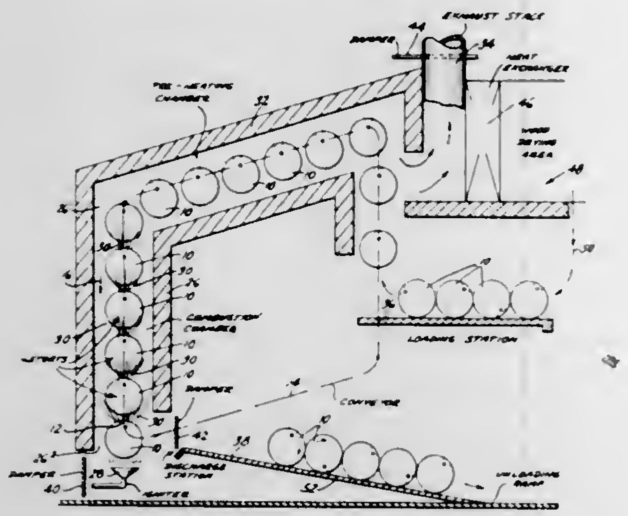

A process and apparatus for carbonizing a solid fuel such as wood and coal in which the fuel is loaded in a series of closed retorts, each retort being provided with a gas vent, the loaded retorts being moved through a combustion chamber with the retorts arranged in serial relation and with the gas vent in each retort facing generally toward the next preceding retort in the series, there being a gas flow path between each said vent and the corresponding next preceding retort, the distilled and burning gases from any given retort and its gas vent becoming the heat source of the next succeeding retort in the series.

3,398,059
MULTI-STAGE FLASH EVAPORATOR WITH MEANS TO INDUCE HYDRAULIC JUMP
Domenick Cane, Springfield, Karl A. Katzor, Drexel Hill, and Thomas J. Rabas, Havertown, Pa., assignors to Westinghouse Electric Corporation, Pittsburgh, Pa., a corporation of Pennsylvania
Filed May 24, 1965, Ser. No. 458,243
6 Claims. (Cl. 202—173)

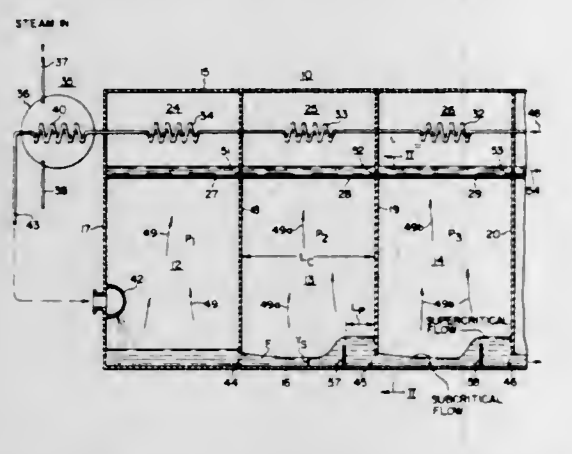

This invention relates to evaporators, more particularly to multi-stage flash evaporators, and has for an object to provide an improved arrangement permitting operation of the flash evaporation chambers with optional minimal depth of the distilland, yet substantial decrease in the possibility of vapor "blow-by" between adjacent chambers. The above is attained by providing means including orifice means and upstanding means positioned, and so arranged, and proportional with respect to the length of the chamber that the phenomenon known as "hydraulic jump" is induced in the distilland stream, which phenomenon is effective to raise the height of the flowing stream in that portion of the chamber adjacent the orifice from below "critical depth" to above "critical depth." Critical depth as referred to in the specification and claims is a specific hydraulic term defining a depth at which the specific energy of a flowing liquid is at a minimum value.

3,398,060
PROCESS FOR CONTINUOUS REGENERATIVE DISTILLATION OF IMPURE WATER
John James Cowley, Toronto, Ontario, Canada, assignor to Desal Limited, Weston, Ontario, Canada
Continuation of application Ser. No. 434,746, Feb. 19, 1965, now Patent No. 3,305,454, dated Feb. 21, 1967. This application Feb. 10, 1967, Ser. No. 615,198
5 Claims. (Cl. 203—11)

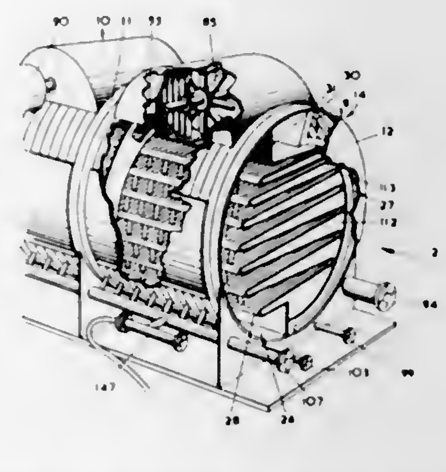

This specification discloses a process and apparatus for regenerative distillation which is conducted at reduced pressures in a plurality of flow channels or zones of continuously expanding volume on the vapourization side and of continuously decreasing volume on the condensation side of the system and in which vapour flow is induced in predetermined directions to enhance efficiency.

3,398,061
METHOD OF PURIFYING ETHYLENE GLYCOL BY WATER ADDITION DISTILLATION AND TREATMENT WITH ACTIVATED CLAY
Horst Taul, Kassel-Bettenhausen, Germany, assignor to Glanzstoff AG, Wuppertal, Germany
No Drawing. Filed Apr. 13, 1967, Ser. No. 630,518
Claims priority, application Germany, Apr. 16, 1966, V 30,864
3 Claims. (Cl. 203—18)

A method of purifying ethylene glycol contaminated by its oxidation products, especially by aldehyde impurities, by adding a small amount of water to the crude glycol and distilling off the water from the crude mixture under partial vacuum, the glycol then being distilled under further reduced pressure after adding thereto a pulverulent acid-activated montmorillonite or hectorite clay. The method is particularly useful for purifying ethylene glycol recovered as a by-product in the production of a polyester by polycondensation of diethylene glycol terephthalate.

3,398,062
OLEFIN OXIDE PURIFICATION BY FRACTIONAL DISTILLATION FOLLOWED BY SIDE STREAM STRIPPING
Utah Tsao, Jersey City, N.J., assignor to The Lummus Company, New York, N.Y., a corporation of Delaware
Filed Feb. 10, 1965, Ser. No. 431,638
6 Claims. (Cl. 203—78)

A process for recovering an olefinic oxide, such as propylene oxide, from an impure solution thereof wherein the solution is first subjected to fractional distillation to separate the heavier components of the solution and recover the olefinic oxide and the lighter components. The lighter components are then stripped from the olefinic oxide and the olefinic oxide recovered as a substantially pure liquid.

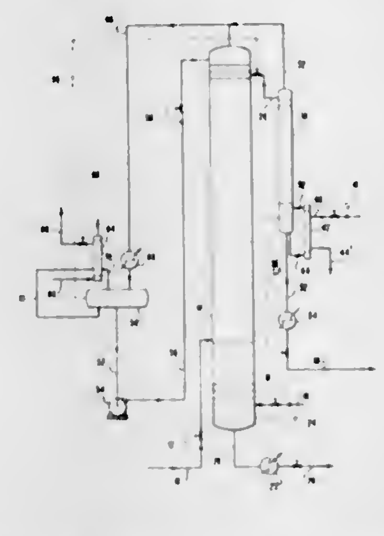

3,398,063
SEPARATION OF ETHYLBENZENE AND STYRENE BY LOW PRESSURE, HIGH TEMPERATURE DISTILLATION
Harry M. Van Tassell, Des Plaines, Ill., assignor to Universal Oil Products Company, Des Plaines, Ill., a corporation of Delaware
Filed Nov. 22, 1966, Ser. No. 596,151
7 Claims. (Cl. 203—91)

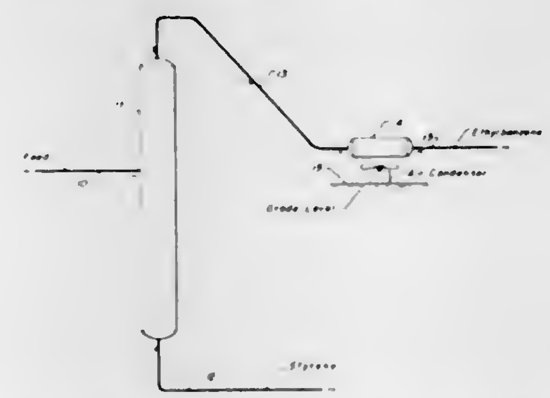

Method for distilling a mixture of ethylbenzene and styrene in a single distillation of column having a column bottoms temperature exceeding 220° F. Styrene in a purity from 95% to 99% by weight is recovered from the bottom of the distillation column. Similarly, ethylbenzene in high purity is recovered as an overhead distillate fraction from the distillation column.

3,398,064
SCANNING COULOMETRY METHOD AND APPARATUS
Robert C. Propst, Aiken, S.C., assignor to the United States of America as represented by the United States Atomic Energy Commission
Filed June 22, 1964, Ser. No. 377,144
10 Claims. (Cl. 204—1)

A scanning coulometric titration instrument and method for continuous electroanalytical determination of redox species in electrolyte solutions by recording the coulomb-potential curve of the redox species. A solution of an electrolyte and redox species is placed in an electrolysis cell that has an isolated electrode, a working electrode and a reference electrode. A potential difference (voltage) is maintained between the reference electrode and the working electrode while the electrolysis current passses between the isolated electrode and the working electrode. A scanning circuit that responds to changes in the electrolysis current is adapted to change the potential difference at a rate inversely proportional to changes in the electrolysis current. A recorder simultaneously records (1) changes in the potential difference at the working electrode and (2) the integral of the electrolysis current.

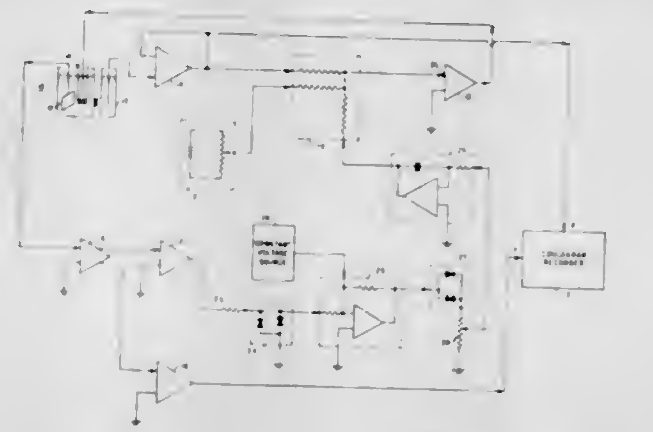

A coulomb-potential curve of the titration of the particular redox species being scanned is thereby recorded. The coulomb-potential curve or coulogram shows the reactions that occur at the working electrode and the quantity of electricity consumed in the electrolysis by the redox species being analyzed.

3,398,065
METHOD AND APPARATUS FOR MEASURING CORROSION RATE
Glenn A. Marsh, Crystal Lake, Ill., assignor, by mesne assignments, to Union Oil Company of California, Los Angeles, Calif., a corporation of California
Continuation-in-part of application Ser. No. 248,451, Dec. 31, 1962. This application Nov. 8, 1963, Ser. No. 322,281
23 Claims. (Cl. 204—1)

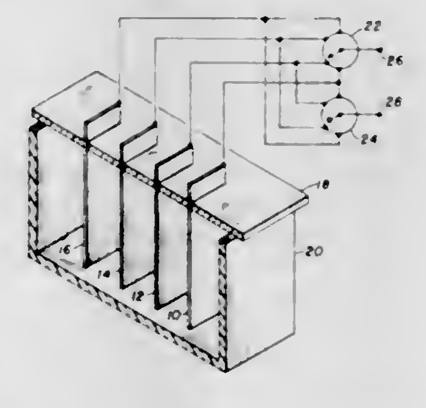

Method for measuring instantaneous corrosion rate comprising applying a measured potential of less than 0.03 volt across a test specimen and another electrode, and measuring the current flow between the electrodes during the time the potential is applied. The invention also includes apparatus and electric circuit for carrying out the aforementioned method.

3,398,066
METHOD AND APPARATUS FOR THE DETERMINATION OF K AND Na
Asher Ilani, Jerusalem, Israel, assignor to Yissum Research Development Company, Jerusalem, Israel, a company of Israel
Filed Mar. 19, 1965, Ser. No. 441,015
Claims priority, application Israel, Apr. 24, 1964, 21,246
11 Claims. (Cl. 204—1)

4. A method for the determination of sodium and potassium in a solution to be tested which comprises placing a solution of the material to be tested into a container having as a common boundary with the contents of a second container a membrane imbued with a liquid

selected from the group consisting of octanol, butanol, and heptanol, inserting a reference solution into the second container said solution containing a known quantity of potassium and sodium and to which has been added a few drops of the liquid with which the membrane has been imbued, and measuring the electric potential between

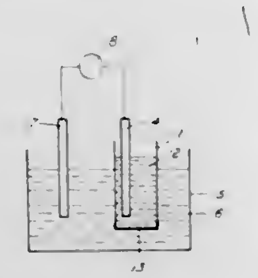

the solutions in the two containers; and repeating the above steps while substituting as the liquid with which the membrane is imbued a liquid selected from the group consisting of toluene, benzene, xylene and chloroform; and determining the content of sodium and potassium in the test solution by reading from a diagram which has been previously prepared from known solutions.

3,398,067
METHOD OF MAKING THIN FILM CAPACITOR
Aubrey J. Raffalovich, Little Silver, N.J., assignor to the United States of America as represented by the Secretary of the Army
No Drawing. Filed Nov. 3, 1964, Ser. No. 408,704
3 Claims. (Cl. 204—37)

A thin film capacitor is obtained by depositing an anodizable metal onto a substrate. The deposited layer is then anodized in a suitable electrolyte to form an oxide film, the oxide or anodized film aged, and the aged oxide film then reanodized.

3,398,068
NOVEL COMPOUNDS OF TANTALUM AND COLUMBIUM AND PROCESS FOR PREPARATION
Geoffrey W. Mellors, North Royalton, and Seymour Senderoff, Fairview Park, Ohio, assignors to Union Carbide Corporation, a corporation of New York
No Drawing. Filed Oct. 7, 1964, Ser. No. 402,352
23 Claims. (Cl. 204—61)

Tantalum hexafluoride and columbium hexafluoride are novel compounds produced by electrolyzing an electrolytic system comprising a base melt of at least one alkali or alkaline earth fluoride and at least one fluoride of tantalum or columbium. These compounds are useful as high temperature fluorinating agents and for use in stripping tantalum plated surfaces.

3,398,069
ELECTROLYSIS OF AQUEOUS ELECTROLYTE SOLUTIONS
Walter Juda, Lexington, Mass., assignor to Ionics Incorporated, Cambridge, Mass., a corporation of Massachusetts
Original application Jan. 9, 1961, Ser. No. 81,334, now Patent No. 3,214,362, dated Oct. 26, 1965. Divided and this application May 21, 1965, Ser. No. 470,286
2 Claims. (Cl. 204—98)

1. A process for the electrolysis of an aqueous saline electrolyte comprising the steps of introducing said aqueous electrolyte into a multicellular device wherein the cells are separated by electrically conductive, porous elements each of which constitutes one electrode of each of adjacent separated cells, impressing an electrical current upon said device between a pair of terminal electrodes thereof thereby forming a basic solution and hydrogen gas adjacent negative electrodes and an acidic solution and oxygen gas adjacent positive electrodes, diffusing one of said gases through the electrodes adjacent thereto and into the electrode of opposite polarity of the next adjacent cell, catalyzing said one of said gases in said electrode of opposite polarity to form ions of said one of said gases thereby contributing a portion of the electrical power re-

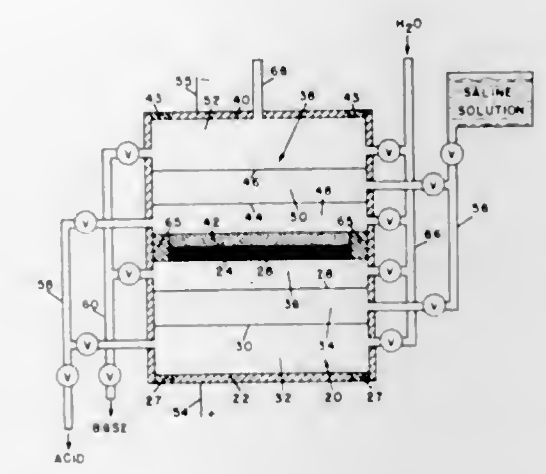

quired for the electrolysis, combining said ions with the other of said gases adjacent said electrode of opposite polarity thereby disposing of the other of said gases, withdrawing said basic solution from adjacent said negative electrodes, and withdrawing said acidic solution from adjacent said positive electrodes.

3,398,070
MERCURY-CATHODE CHLORINE CELLS
Hiroshi Shibata, Nakoso-shi, Japan, assignor to Kureha Kagaku Kogyo Kabushiki Kaisha, Tokyo-to, Japan
Filed Mar. 17, 1966, Ser. No. 535,101
Claims priority, application Japan, Mar. 29, 1965, 40/18,180
2 Claims. (Cl. 204—99)

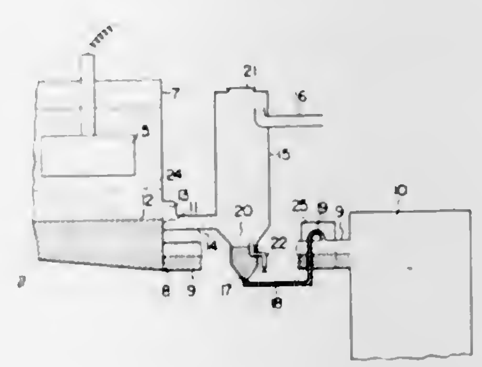

1. A method for disposal of flow-out mercury, brine, and foreign substances discharged from a mercury-cathode chlorine cell of the type, wherein mercury flowing over at least one primary electrolytic chamber is poured as a uniform sheet into an oblong mercury flow-out trough over a side wall thereof, which trough is disposed perpendicularly to the flow direction of said mercury, and then said mercury flows along said trough to be discharged as flow-out mercury from a transverse side of the electrolytic cell, which comprises: discharging a greater part of the flow-out mercury through a mercury main discharge outlet provided at the lower part of the outlet end of said trough to an amalgam decomposer; discharging return brine and foreign substance suspended above the mercury together with a portion of the mercury through a return brine pipe having an inlet in the vicinity of said outlet end of said flow-out trough, said inlet having a lower rim positioned at least as high as the surface of the mercury in said trough at said outlet end; continuously separating from each other said return brine, mercury, and foreign substances thus discharged by means of a separator tank; and continuously conveying the mercury thus separated to a point of confluence with the mercury discharged by said mercury main discharge outlet toward said amalgam decomposer.

3,398,071
METHOD FOR MAKING WALL STRUCTURE IMPERVIOUS TO MOISTURE
Samuel M. Bagno, 18 Columbus Ave., Belleville, N.J. 07109
Filed Mar. 23, 1964, Ser. No. 353,990
5 Claims. (Cl. 204—130)

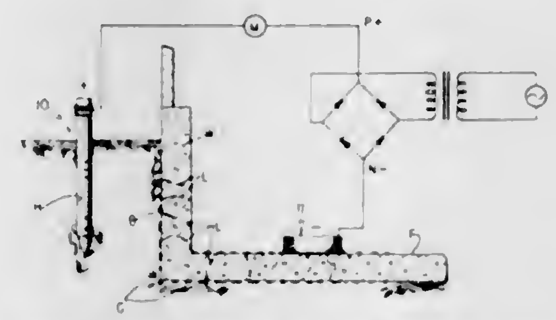

1. The method of making wall structure beneath the ground impervious to moisture, which method comprises placing beneath the ground adjacent one side of the wall structure a first electrolyte containing a metallic ion, placing adjacent the other side of the wall structure a second electrolyte containing an ion of the kind which combines with the metallic ion of the first mentioned electrolyte to produce a substantially water insoluble precipitate, wetting the first and second electrolytes and the wall structure, electrically connecting the electrolytes to the positive and negative terminals respectively of a D.C. power source in a sense whereby an ion of each electrolyte of like sign as its terminal will migrate towards the other electrolyte to produce a substantially water insoluble precipitate within said structure which renders the wall structure impervious to moisture.

3,398,072
PROCESS FOR MAKING FLUORINATED NITROSOALKANES
William J. Fraser, Forest Lake, Minn., assignor to the United States of America as represented by the Secretary of the Army
No Drawing. Filed Sept. 30, 1964, Ser. No. 400,605
17 Claims. (Cl. 204—158)

Process for producing a fluorinated nitrosoalkane directly from a fluorinated alphatic carboxylic acid comprising reacting the fluorinated aliphatic carboxylic acid with a nitrosyl halide in the vapor phase under the influence of actinic radiation.

3,398,073
PHOTOCHEMICAL REACTION PROCESS USING A HALOSILANE-COATED VESSEL
Cyril Geacintov, Scotch Plains, Leon Starr, Plainfield, and William J. Toth, Carteret, N.J., assignors to Mobil Oil Corporation, a corporation of New York
Filed Apr. 13, 1965, Ser. No. 447,627
10 Claims. (Cl. 204—159.13)

1. In a process for the photochemical addition of an anhydride reactant selected from the group consisting of maleic anhydride and chloromaleic anhydride to a hydrocarbon reactant selected from the group consisting of benzene and methyl-substituted benzenes in which a reaction mixture containing said anhydride reactant, said hydrocarbon reactant, and a photosensitizer is exposed to ultraviolet light emitted from a source which is separated from said mixture by fluid-tight means made of glass in at least a portion thereof through which said ultraviolet light passes from said source to said mixture, in which said mixture comes in contact with the surface of said glass in the course of said process, and in which such contact normally results in the gradual formation of an undesirable coating on said surface of said glass, the improvement which comprises carrying out said process with the use of fluid-tight means in which said glass has been coated, prior to use in said process, with a compound having the formula R_mSiX_n, in which each R is selected from the group consisting of alkyl and aryl; each X is a halogen other than fluorine; *m* is one, two or three; and the sum of *m* and *n* is four; and heated to above room temperature.

3,398,074
METHOD OF MANUFACTURING IMPROVED POLYOXYMETHYLENE GRAFT COPOLYMERS USING RADIATION
motsu Eguchi and Takuji Okaya, Kurashiki, Japan, assignors to Kurashiki Rayon Co., Ltd., Kurashiki, Japan
No Drawing. Filed Sept. 27, 1965, Ser. No. 490,731
Claims priority, application Japan, Oct. 8, 1964, 39/57,061
3 Claims. (Cl. 204—159.15)

1. A method of manufacturing polyoxymethylene graft copolymers which comprises irradiating a thermally stable polyoxymethylene copolymer of a polymerization degree of not less than 500 which contains from 0.1 to 15 molar percent of a comonomer having carbon-carbon linkage selected from the group consisting of alkylene oxides, cyclic formal and vinyl monomers with from 10^4 to 5×10^7 roentgens of ionizing radiation, and effecting graft copolymerization of the irradiated polymer by contact with a radically polymerizable vinyl compound with a graft ratio ranging from 0.5 to 200 percent.

3,398,075
METHOD OF MAKING TELOMERS BY MEANS OF NUCLEAR RADIATION
Edwin O. Guernsey, Pennington, N.J., and William E. Smith, Levittown, Pa., assignors to Mobil Oil Corporation, a corporation of New York
Filed Oct. 2, 1963, Ser. No. 313,265
15 Claims. (Cl. 204—162)

1. The process of making tertiary alcohols having an odd number of carbon atoms in the range of 5 to 9 carbons which comprises irradiating with nuclear radiation a flowing mixture of isopropanol and ethylene in the vapor phase at a pressure ranging from 0.1 to 10 atmospheres, a temperature of 100 to 300° C., and a mole ratio of isopropanol to ethylene initially in the range of 5:1 to 30:1, said radiation being applied to the reactants for a time ranging from 10 seconds to 1 minute so that the total dose applied to said reactants is about 0.1 to 0.5 megarad, forming liquid product containing said tertiary alcohols in which the total G value of said alcohols is in the range of 50 to 300, and separating and recovering said alcohols.

3,398,076
METHOD FOR THE ELECTROPURIFICATION OF WATER
Anthony C. Suleski, Centerport, N.Y., assignor to Hazeltine Research Inc., a corporation of Illinois
Filed Mar. 21, 1963, Ser. No. 266,855
2 Claims. (Cl. 204—180)

1. The method of purifying water comprising:
freezing a quantity of impure water into a block of ice;
applying a D-C potential between two separated surface areas of said block of ice so as to cause impurities to congregate near said surface areas;

cutting away the portions of said ice in which said impurities have congregated;

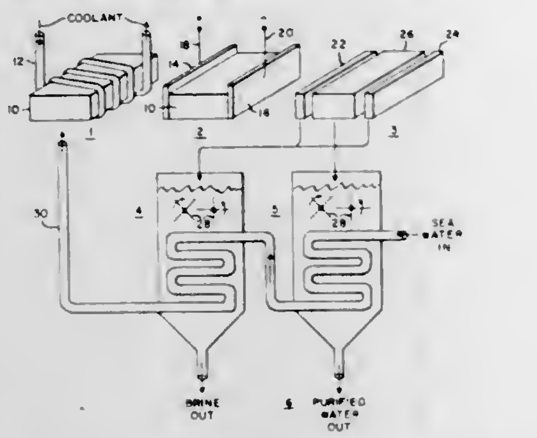

crushing said portions in which impurities have congregated and using said crushed portions to cool additional water to be purified;
crushing the remaining portion of said ice and using said crushed remaining portions to cool additional water to be purified;
and recovering the purified water produced by the melting of said remaining portion of ice.

3,398,077
ELECTROSTATIC CHARGING OF SOLID CO_2 PARTICLES IN LIQUID GAS
Carl F. Crownover and Richard L. Every, Ponca City, Okla., assignors to Conch International Methane Limited, Nassau, Bahamas, a Bahamian company
Filed Oct. 15, 1964, Ser. No. 404,074
11 Claims. (Cl. 204—180)

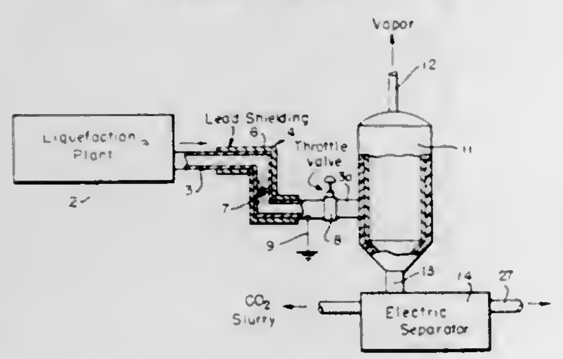

1. A process for the separation of mixtures including at least two different gases, one of which solidifies at a higher temperature than the other, which comprises the steps of converting the two gases to a mixture of liquefied gases at high pressure, subjecting the mixture to an ionization emission to produce an enhanced concentration of charged molecular particles in the mixture immediately thereafter, reducing the pressure in such fashion as to produce a slurry of solid particles of said one gas in the still liquefied other gas, said solid particles acquiring a charge due to containing charged molecular particles from the ionization step, and separating the charged particles from the liquid by attracting them to an electrode of opposite polarity to that of the charged particles.

3,398,078
RECOVERY OF GLUTAMIC ACID VALUES BY ELECTRODIALYSIS
Harry P. Gregor, Leonia, N.J., assignor to International Minerals & Chemical Corporation, a corporation of New York
Filed Mar. 17, 1965, Ser. No. 440,371
19 Claims. (Cl. 204—180)

1. A process for the electrodialytic treatment of glutamic acid-containing solutions in an electrodialytic cell arrangement having alternate anion- and cation-permeable membranes which comprises:
(1) positioning a glutamate ion-containing aqueous solution in a compartment (Y) between two compartments (X) and (Z) containing water, said first water compartment (X) being positioned on the anode side of compartment (Y) and being separated from compartment (Y) by an anion-permeable membrane, said second water compartment (Z) being positioned on the cathode side of compartment (Y) and being separated from compartment (Y) by a cation-permeable membrane; and
(2) positioning an aqueous solution of an ionizable compound containing cations selected from the group consisting of ammonium and metal cations in a compartment (W) adjacent to compartment (X)

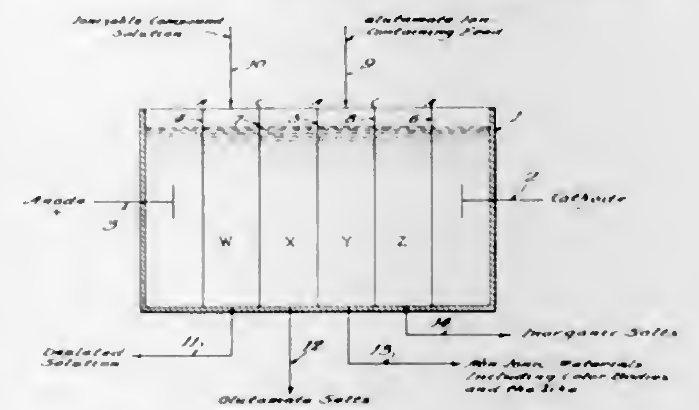

and on the anode side of compartment (X), said compartment (W) being separated from compartment (X) by a cation-permeable membrane, and separated from the anode compartment by an anion membrane; and
(3) passing electric current through the fluids in said compartments whereby cations from compartment (W) and anions from compartment (Y) migrate into compartment (X) to form a salt solution; and
(4) recovering a glutamate salt from compartment (X).

3,398,079
ELECTROCHEMICAL APPARATUS
Edwin P. Arthur, Fullerton, Ernest N. Carlsen, West Los Angeles, and George W. Stevenson, Los Angeles, Calif., assignors to Beckman Instruments, Inc., a corporation of California
Continuation-in-part of application Ser. No. 91,957, Feb. 27, 1961. This application June 4, 1964, Ser. No. 372,585
7 Claims. (Cl. 204—195)

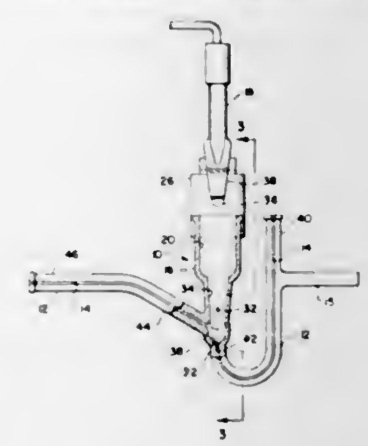

Apparatus for analyzing small liquid samples such as blood. The apparatus comprises a body having a small passage through which the liquid sample passes. An opening communicates with the liquid passage. A sensing electrode such as a glass electrode is of such configuraton to close the opening when mounted therein. A reference electrode is coupled to the opening through a salt bridge with the salt bridge solution communicating with the sample passage via an electrolytic path provided between the surface of the sensing electrode and the opening in which it is mounted.

3,398,080
MERCURY VERTICAL CATHODE ELECTROLYTIC CELL
Robert S. Steffanson, Concord, Robert D. Barnard, Walnut Creek, and Arthur K. Johnson, San Diego, Calif., assignors to The Dow Chemical Company, Midland, Mich., a corporation of Delaware
Filed Mar. 22, 1965, Ser. No. 441,769
9 Claims. (Cl. 204—219)

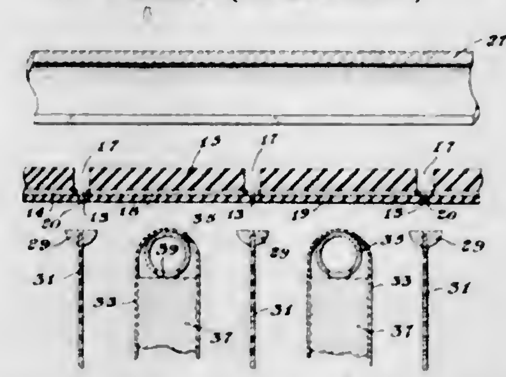

1. In a mercury vertical cathode electrolytic cell assembly comprising a fluid-tight, box-like structure, cathode supports having a mercury distribution system, graphite anodes, electrolyte inlet and discharge means, vent gas and mercury removing means, and means to impress an electrolytic current between the anodes and cathodes the improvement which comprises:
(a) at least one bi-polar electrode structure containing a multiplicity of graphite anodes and cathode supports, each of said anodes being attached to the same face of an electrically conducting backing plate and each of said cathode supports being attached to the opposite face of said backing plate, said anodes and cathode supports being in spaced apart relationship and extending outwardly from the faces of said backing plate, each anode having a tubular collector member positioned along its top edge, said collector providing communication between the interior of the cell and the electrolyte and gas venting means, each cathode support fitted with a spreader bar extending along the length of its top edge and the bottom of each of said cathode supports communicating with the bottom of the cell, a porous diaphragm covering said anodes and tubular collector members and separating said anodes and tubular collector members from said cathode supports, said bi-polar electrode structure positioned in said cell body by means of said common backing plate attached to top and bottom frame members of said cell body, and
(b) a mercury distribution system comprising an open-top box-like member inert to brine and mercury having a multiplicity of spaced perforations arranged in series of rows at spaced apart intervals along the length of the bottom of the box, each row of said spaced perforations extending substantially across the width of the bottom of the box, a conduit means for introducing mercury to said box, said conduit means communicating with a mercury supply, said mercury distribution system positioned in said cell above said bi-polar electrode structure such that each row of perforations in the bottom of said box is above a mercury spreader bar on a cathode support.

3,398,081
PREBAKED CARBON ANODES AND ANODE ASSEMBLY FOR THE PRODUCTION OF ALUMINUM
René Bonfils and Henri Des Rochettes, St. Jean-de-Maurienne, France, assignors to Pechiney-Compagnie de Produits Chimiques et Electrometallurgiques, Paris, France
Filed Apr. 5, 1966, Ser. No. 540,254
8 Claims. (Cl. 204—286)

1. A prebaked carbon anode having a cavity in the upper end portion for receiving an anode foot for attachment thereto in which the cavity is formed with helical grooves extending downwardly from the upper end of

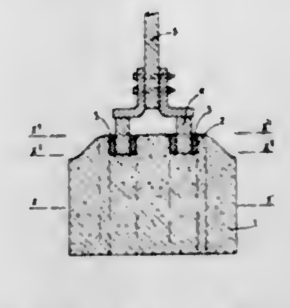

the cavity in the side walls thereof and in which the side walls of the groove define a section of trapezoidal shape.

3,398,082
ELECTROSTATIC FILTERING OF IMPURITIES FROM LIQUIDS
Helmut Lochmann, Singen, Hohentwiel, and Karl Quenzer, Hilzingen, Hegau, Germany, assignors to Swiss Aluminium Ltd., Chippis, Switzerland, a corporation of Switzerland
Filed Feb. 7, 1966, Ser. No. 525,763
Claims priority, application Switzerland, Feb. 10, 1965, 1,777/65
1 Claim. (Cl. 204—302)

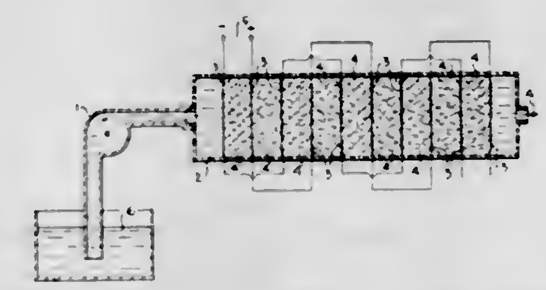

Filtering device to remove from dielectric liquids impurities particles electrostatically. The liquid passes through a plurality of perforated electrodes that are fed from a source of direct electric current; positively and negatively charged electrodes alternate, and all the electrodes of the same polarity are connected in series so that the voltage drops in the flow direction.

3,398,083
AROMATICS PRODUCTION PROCESS
George E. Addison, Mount Prospect, Ill., assignor to Universal Oil Products Company, Des Plaines, Ill., a corporation of Delaware
Continuation-in-part of application Ser. No. 460,894, June 3, 1965. This application Nov. 2, 1966, Ser. No. 611,487
8 Claims. (Cl. 208—87)

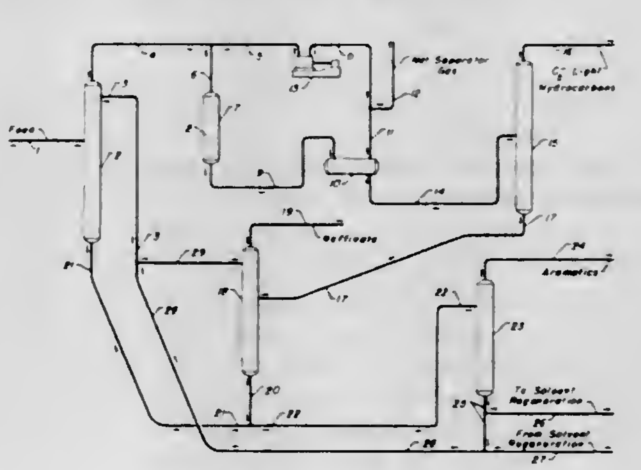

Process of removing aromatics from a reformer feed by solvent extraction, reforming the raffinate, separately solvent extracting the reformed raffinate to separate

aromatics from a second raffinate phase, and recovering the aromatics and the second raffinate phase as products of the process.

3,398,084
PREPARATION OF SILICA-ALUMINA COMPOSITES FOR USE IN THE HYDROCRACKING OF HYDROCARBONS
Peter Desmond Holmes, Old Greenwich, Conn., and Robert Chalmers Pitkethly, Camberley, and Alan Richard Thornhill, Epsom, England, assignors to The British Petroleum Company Limited, London, England, a corporation of Great Britain
No Drawing. Filed May 12, 1965, Ser. No. 455,300
Claims priority, application Great Britain, May 15, 1964, 20,268/64
10 Claims. (Cl. 208—111)

7. A process for hydrocracking hydrocarbons which comprises contacting the hydrocarbon in a hydrocracking zone with a catalyst prepared by contacting silica, having hydrogen atoms in surface hydroxyl groups capable of ionizing and exchanging, with an ionic solution of an aluminium salt at a temperature in the range 0–100° C. such that from 0.1 to 3% ions of the aluminium, expressed as percent by weight of the silica, is incorporated onto the surface of the silica, and from 0.1 to 50% weight, based on the final catalyst, of a catalytic component selected from the group consisting of a platinum and palladium also being incorporated with the silica, said contacting being carried out at a temperature in the range 450–950° F., a pressure of 230 to 3000 p.s.i.g., a space velocity of 0.2–5.0 v./v./hr., and a hydrogen rate of 1000 to 20,000 s.c.f./b.

3,398,085
CATALYST ADDITION AND WITHDRAWAL PROCESS
Theodore M. Engle, Lambertville, N.J., assignor to Hydrocarbon Research, Inc., New York, N.Y., a corporation of New Jersey
Filed Sept. 14, 1965, Ser. No. 487,197
8 Claims. (Cl. 208—157)

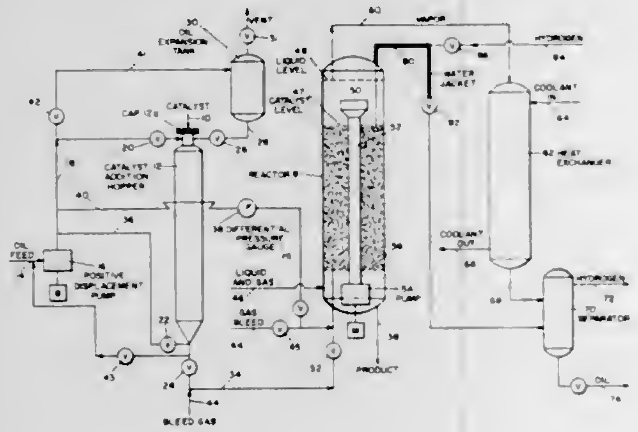

A method for maintaining an average inventory of particulate solids in a pressurized reaction zone without substantial pressure drop during addition or removal of the solids by removing the solids from the reaction zone into a lower pressure zone under control of a gas which is at reaction zone pressure and replenishing the solids in the reaction zone at a rate corresponding to the solids removal by introducing these solids into a holding zone, purging the holding zone of atmospheric gases contained therein by filling the zone with oil and then sealing the zone, and then pressurizing the holding zone to a pressure about the same as the reaction zone by pumping oil into the sealed holding zone and then transferring the particulate solids in the holding zone to the reaction zone by continuously pumping the oil from the holding zone into the reaction zone.

3,398,086
PROCESS FOR TREATING HYDROCARBON DISTILLATES CONTAINING MERCAPTAN AND COLOR-FORMING COMPONENTS
Robert H. Rosenwald, Western Springs, and Peter Urban, Northbrook, Ill., assignors to Universal Oil Products Company, Des Plaines, Ill., a corporation of Delaware
No Drawing. Filed Mar. 23, 1966, Ser. No. 543,458
10 Claims. (Cl. 208—206)

Sour hydrocarbon fractions are treated initially with an aromatic diazonium salt to convert color-forming components in the hydrocarbons into azo compounds, and the treated fractions are then reacted with an oxidizing agent to convert mercaptan components into disulfides. The initial treatment removes phenolic components from the hydrocarbons thus preventing color depreciation during the oxidation step.

3,398,087
INTERACTING CONTROL OF DISTILLATION
Roy E. Lieber, Hackensack, Eric Vander Schraaf, Morris Plains, and Warren J. Dassau, Califon, N.J., assignors to Esso Research and Engineering Company, a corporation of Delaware
Filed May 19, 1966, Ser. No. 551,292
4 Claims. (Cl. 208—350)

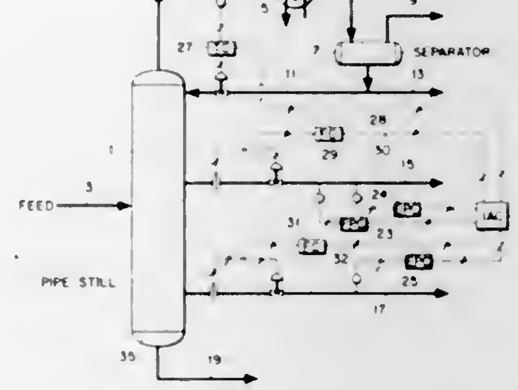

The present invention is directed to a method of controlling a refinery process, particularly those carried out in distillation units, catalytic crackers and the like, where a change in a manipulated variable effects a change in more than one controlled variable. An interacting controller is utilized to initiate changes in manipulated variables in response to changes in the controlled variables.

3,398,088
PHOSPHOROUS REMOVAL IN MEMBRANE WASTE WATER TREATMENT
Robert W. Okey, Westport, Conn., assignor to Dorr-Oliver Incorporated, Stamford, Conn., a corporation of Delaware
Filed May 31, 1967, Ser. No. 642,572
2 Claims. (Cl. 210—3)

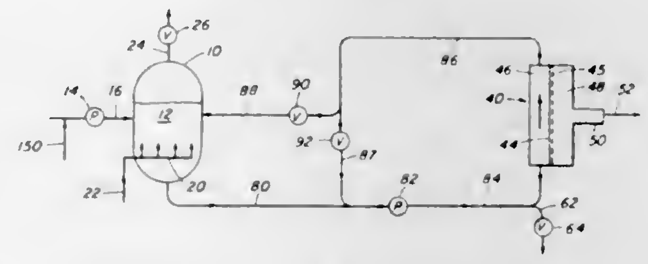

The utilization of lime in a membrane waste treatment system to precipitate phosphorous.

3,398,089
METHOD AND APPARATUS FOR THE BIOLOGICAL PROCESSING OF LIQUIDS
Svatopluk Mackrle, Brno, Vladimir Mackrle, Prague, and Oldrich Dracka, Ferdinand Halamek, Lubomir Paseka, and Pavel Polasek, Brno, Czechoslovakia, assignors to Ceskoslovenska akademie ved, Prague, Czechoslovakia, a corporation of Czechoslovakia
Filed Apr. 15, 1965, Ser. No. 448,422
Claims priority, application Czechoslovakia, Apr. 25, 1964, 2,424/64; Aug. 3, 1964, 4,426/64
5 Claims. (Cl. 210—7)

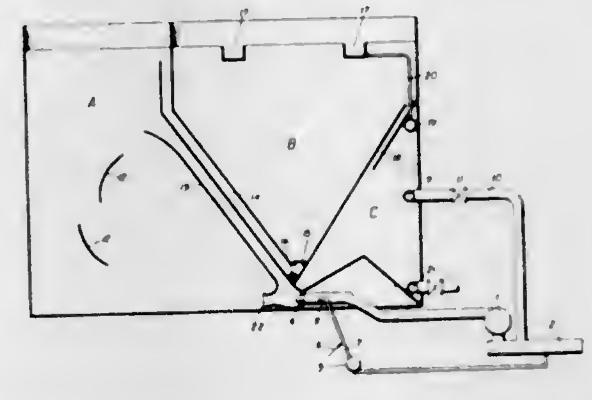

The invention relates to a method and apparatus for the biological processing of a liquid polluted with organic matter in a unitary structure having a bioflocculation zone, a flocculent suspension concentration zone and a filtration zone disposed intermediate said bioflocculation and concentration zones. The liquid polluted with organic matter is processed by passage thereof through a bioflocculation zone having an overflow connected at the top by a channel leading to the bottom section of the filtration zone, a flocculent suspension concentration zone and a filtration zone having an overflow connected at the top to a channel leading to the concentration zone.

3,398,090
ION EXCHANGE WATER TREATMENT USING VIBRATORY AGITATION
Rudy Bartell, Berwyn, and Herbert A. McKee, Wayne, Pa., assignors to Atlantis Water Treatment Co., Inc., Philadelphia, Pa., a corporation of Pennsylvania
Continuation-in-part of abandoned application Ser. No. 262,529, Mar. 4, 1963. This application Oct. 20, 1965, Ser. No. 506,424
23 Claims. (Cl. 210—19)

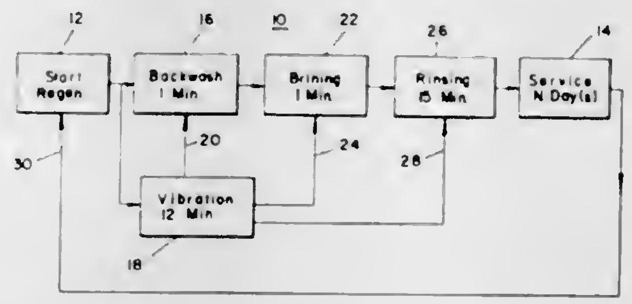

6. The method of processing water utilizing a bed of ion exchange particles comprising the steps of:
(a) passing water through said bed of ion exchange particles confined within a container for removing impurities from said water, and
(b) periodically regenerating said bed of particles by successively (1) passing water through said bed in the backwash direction, (2) passing a brine solution through said bed of exchange particles, (3) rinsing said particles by passing water through said bed of particles, and (4) subjecting said particles to vibratory agitation having a frequency within the audible and subaudible range during steps (1), (2) and (3), and
(c) proceeding with step (a) supra.

3,398,091
MEMBRANE SEPARATION APPARATUS AND PROCESS
John L. Greatorex, Marblehead, Mass., assignor to Ionics, Incorporated, Watertown, Mass.
Filed Aug. 9, 1966, Ser. No. 571,250
13 Claims. (Cl. 210—23)

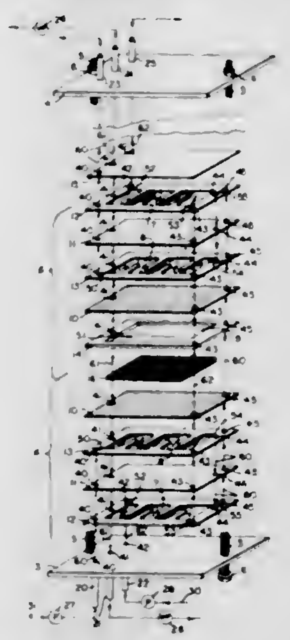

A stack of plate-like sub-assemblies, each sub-assembly comprising spacer frames defining first and second compartments, and a third compartment common to two sub-assemblies, wherein the first and second compartments are separated by a heating barrier and the second and third compartments are separated by a semi-permeable membrane barrier, wherein the third compartment is under vacuum, and wherein the fluid mixture to be separated traverses a deflected flow path.

3,398,092
WATER PURIFICATION PROCESS
Joseph E. Fields, Ballwin, and John H. Johnson, Kirkwood, Mo., assignors to Monsanto Company, St. Louis, Mo., a corporation of Delaware
No Drawing. Continuation-in-part of application Ser. No. 248,881, Jan. 2, 1963. This application Mar. 18, 1965, Ser. No. 440,911
32 Claims. (Cl. 210—24)

1. A process for purifying water by selectively reducing the concentration of at least one of the groups of viruses, coliform bacteria, other microorganisms, and surface active agents in water comprising contacting the water with a hydrophilic, water-insoluble, cross-linked polyampholyte derived from a copolymer of an olefin of 2 to 12 carbon atoms and a monomer selected from the group consisting of (1) a mixture of an unsaturated polycarboxylic acid and an unsaturated polycarboxylic acid derivative, and (2) polycarboxylic acid derivatives.

3,398,093
PROCESS FOR SEPARATING SOLIDS FROM LIQUID SUSPENSIONS THEREOF
Francis X. Ferney, Walpole, Mass., assignor to Bird Machine Company, Walpole, Mass., a corporation of Massachusetts
Filed June 17, 1965, Ser. No. 464,745
8 Claims. (Cl. 210—54)

In a process of separating solids from liquid, primary stage separation is carried out without removing from the effluent a solids fraction which requires chemical addition for removal and which does not interfere with recirculation and re-use of the effluent. A portion of this effluent constituting the major part of the liquid entering the primary stage is recirculated for re-use. The remainder of the liquid is treated to remove this solids fraction, as may be required for disposal, in secondary

stage separation by feeding the underflow from the primary stage to a centrifuge, feeding the remainder of the primary stage effluent to another secondary stage sepa-

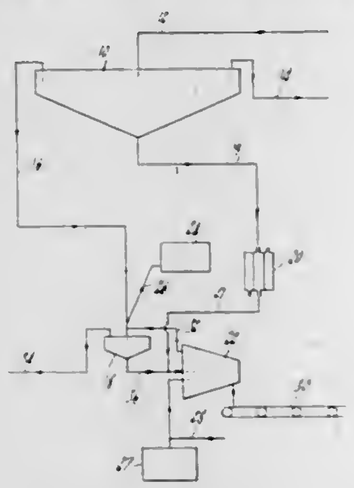

rator in which chemical is added and from which the underflow is also fed to the centrifuge, and by adding chemical to the feed to the centrifuge.

3,398,094
VISCOUS AQUEOUS SOLUTION
Paul E. Blatz, Laramie, Wyo., and Sherrod A. Williams, Jr., Dallas, Tex., assignors to Mobil Oil Corporation, a corporation of New York
No Drawing. Filed Dec. 14, 1964, Ser. No. 418,326
20 Claims. (Cl. 252—8.55)

This specification discloses a viscous aqueous solution and uses therefor, the viscous aqueous solution being prepared by dissolving a first water-soluble polymer and a second water-soluble polymer in water to form an interaction product and to produce a more viscous solution than either of the polymers alone produce at the same concentration. The first water-soluble polymer is either a sulfonated poly-(2,6-dialkyl phenol) or its water-soluble salts. The alkyl groups therein are either methyl, ethyl, or normal propyl. The second water-soluble polymer is either poly-(N-vinyl-2-pyrrolidone); poly-(N-vinyl-5-R-2-oxazolidinone) where R is either a hydrogen, a methyl group, or an ethyl group. The first water-soluble polymer and the second water-soluble polymer have molecular weights of at least about 10,000 and are present in a total concentration of at least 0.01 percent by weight of the solution. Polymers having a molecular weight above 10,000 produce somewhat greater viscosities at the same concentration.

3,398,095
VAPOR-SPACE INHIBITORS
Clark W. Judd, Alton, Ill., assignor to Shell Oil Company, New York, N.Y., a corporation of Delaware
No Drawing. Filed Nov. 13, 1967, Ser. No. 682,571
16 Claims. (Cl. 252—47.5)

The corrosion prevention characteristics of volatile vapor-space inhibitors are greatly enhanced by the presence of sulfurized oleic acid together with a member selected from (1) a C_6–C_{12} n-alkyl carboxylic acid and (2) a C_6–C_{12} n-alkyl carboxylic acid and certain amines.

3,398,096
LOW TEMPERATURE BLEACHING COMPOSITION
Balaram Das, Rotterdam, and Karel Gerhard van Senden, Schiedam, Netherlands, assignors to Lever Brothers Company, New York, N.Y., a corporation of Maine
No Drawing. Filed July 23, 1965, Ser. No. 486,240
Claims priority, application Great Britain, July 24, 1964, 29,769/64
7 Claims. (Cl. 252—95)

A stable dry catalyst powder for enhancing the bleaching action of water-soluble inorganic percompounds at low temperatures of 20–50° C. Comprising a metal-ion of a transition element and a water-insoluble or hardly soluble powdered carrier, processes for the preparation thereof and percompound bleaching compositions containing the catalyst powder.

3,398,097
CLEANING COMPOSITION, AND METHOD OF CLEANING AND SEQUESTERING METAL IONS
Paul W. Kersnar and Samuel Taormina, San Francisco, Calif., assignors to Progressive Products Co., San Francisco, Calif., a corporation of California
No Drawing. Filed July 30, 1965, Ser. No. 476,193
9 Claims. (Cl. 252—152)

The reaction product of between one mol of ethylene diamine and 2.0 to 3.5 mols of propylene oxide, consisting essentially of a mixture of mono, bis, tris and tetra (beta hydroxy propyl) ethylene diamine in which all substituted groups attached to nitrogen of the product consist essentially of beta hydroxy propyl groups and the free hydrogen atom is attached to at least some of the nitrogen in said reaction product, provides a cleaning, and advantageously a blood stain removing composition in combination with an organic acid, particularly dodecyl benzene sulfonic acid, in aqueous solution, and has metal ion sequestering properties.

3,398,098
PREPARATION OF PURE DENSE HYPOSTOICHIOMETRIC URANIUM CARBIDE
Lloyd A. Hanson, Canoga Park, Calif., assignor, by mesne assignments, to the United States of America as represented by the United States Atomic Energy Commission
No Drawing. Filed June 9, 1967, Ser. No. 645,579
1 Claim. (Cl. 252—301.1)

A method is disclosed for preparing hypostoichiometric uranium carbide which includes blending suitable mixture of UO_2, U_3O_8 or UO_3 and carbon powder in an amount sufficient for normally producing hyperstoichiometric or stoichiometric uranium carbide and adding to the blend small amounts of uranium alloys of the order of 1–5% by weight. The carbothermic reduction process is used for heating the mixture to a temperature of the order of 1700–1750° C. so that the alloy decomposes, the foreign metal is removed as a vapor and the free uranium combines to produce hypostoichiometric UC.

3,398,099
FLUORESCENT EUROPIUM CHELATES
Marcos Kleinerman, Southbridge, Mass., assignor, by mesne assignments, to American Optical Company, Southbridge, Mass., a corporation of Delaware
No Drawing. Filed Dec. 28, 1964, Ser. No. 421,634
9 Claims. (Cl. 252—301.2)

A chemical composition consisting of a europium chelate wherein 3 of 4 of the ligand portions are derived from β-diketones and the remaining ligand from either 1,10-phenanthroline or 2,2-bipyridyl. The resulting compounds have use and application in paints and surface coating whereby improved fluorescent properties will be attained.

3,398,100
IRON AND PHOSPHORUS CONTAINING COMPOSITIONS
Harold F. Christmann, Houston, Tex., assignor to Petro-Tex Chemical Corporation, Houston, Tex., a corporation of Delaware
No Drawing. Continuation-in-part of application Ser. No. 377,091, June 22, 1964. This application May 31, 1966, Ser. No. 553,660
The portion of the term of the patent subsequent to Aug. 29, 1983, has been disclaimed
16 Claims. (Cl. 252—435)

New compositions of matter comprising iron, phosphorus and at least one other metallic element other than

iron, especially magnesium, zinc, cobalt, nickel or mixtures thereof. The phosphorus is present in an amount of from .002 to 0.35 atom of phosphorus per atom of iron and the magnesium, zinc, cobalt and nickel are present in the total amount of from .05 to 2 atoms per atom of iron. The compositions comprise oxygen and preferably are at least partially crystalline. Ferrites are preferred. Compositions are useful such as for catalysts for oxidative dehydrogenation and as pigments.

3,398,101
PREREDUCED CUPRIC OXIDE-COBALTIC OXIDE REDOX CATALYSTS
Robert A. Baker, West Chester, and Robert C. Doerr, Philadelphia, Pa., assignors to International Copper Research Association Inc.
Filed Nov. 22, 1963, Ser. No. 325,625
1 Claim. (Cl. 252—466)

1. A catalyst for catalytic reduction of nitrogen oxides consisting essentially of a homogeneous mixture of cobaltic oxide, cupric oxide, and aluminum hydroxide, pre-treated in an atmosphere of carbon monoxide for about 8 hours at about 450° C. to 500° C., said mixture having an initial composition containing 2.5% to 10% by weight of cobaltic oxide, about 62% by weight of cupric oxide, and the balance aluminum hydroxide, having an effective life for catalytic reduction of nitrogen oxide containing gas of more than 350 hours at a temperature above 450° C.

3,398,102
TACKY, CURABLE POLYMERS OF BIS(2,3-EPOXYCYCLOPENTYL)ETHER AND A POLYOL AND A PROCESS FOR THE PREPARATION THEREOF
Anthony C. Soldatos, Kendall Park, and Allison S. Burhans, Millington, N.J., assignors to Union Carbide Corporation, a corporation of New York
No Drawing. Filed July 5, 1966, Ser. No. 562,468
17 Claims. (Cl. 260—2)

This invention relates to tacky, curable polymers of a polyol and bis(2,3-epoxycyclopentyl)-ether and to a process for the preparation thereof by reacting a polyol with bis(2,3-epoxycyclopentyl)-ether in the presence of a tertiary amine. The polymers of this invention can be formed into structures of desired shape and can be used as binders in laminates and in filament wound structures.

3,398,103
FOAM PLASTICS AND PROCESS FOR MAKING THEM
Alfred Kühlkamp, Hofheim, Taunus, and Rudolf Nowack, Frankfurt am Main, Germany, assignors to Farbwerke Hoechst Aktiengesellschaft vormals Meister Lucius & Bruning, Frankfurt am Main, Germany, a corporation of Germany
No Drawing. Filed May 10, 1965, Ser. No. 454,661
Claims priority, application Germany, May 16, 1964, F 42,907
18 Claims. (Cl. 260—2.5)

There is disclosed herein a porous foamed plastic composition, and a method for making such a composition, which comprises the reaction product formed at about room temperature without the addition of heat from approximately equivalent amounts of (1) a compound having at least two acidic hydrogen atoms each of which is on a carbon atom immediately adjacent a carboxyl group or a nitrilo group, (2) a carbamate reaction product of carbon dioxide and a primary or a secondary polyamine, and (3) an aldehyde.

3,398,104
POLYURETHANE FOAM PREPARATION USING SILOXANE GLYCOL BRANCH COPOLYMERS
Loren A. Haluska, Midland, Mich., assignor to Dow Corning Corporation, Midland, Mich., a corporation of Michigan
No Drawing. Continuation-in-part of application Ser. No. 127,843, July 31, 1961. This application July 16, 1965, Ser. No. 472,721
18 Claims. (Cl. 260—2.5)

The preparation of polyurethane foams with novel siloxane glycol copolymers is disclosed. The use of these copolymers allows greater processing latitude than was possible heretofore and results in foams which do not exhibit the undesirable pneumatic effect.

3,398,105
EXPANDABLE POLY(VINYLAROMATIC) COMPOSITIONS AND PROCESS OF MAKING SAME
Alec N. Roper, Cheshire, and Edward G. Barber, Manchester, England, assignors to Shell Oil Company, New York, N.Y., a corporation of Delaware
No Drawing. Filed Sept. 13, 1965, Ser. No. 487,029
Claims priority, application Great Britain, Sept. 21, 1964, 38,362/64
10 Claims. (Cl. 260—2.5)

Expandable polystyrene compositions, cellular polymeric materials prepared therefrom and the process of preparing the expandable compositions and cellular materials wherein there is incorporated in polystyrene from 0.01 to 0.5% of a finely divided resinous polymer and a volatile expanding agent which comprises a mixture of n-pentane and isopentane containing at least 30 but less than 80% by weight of isopentane.

3,398,106
TIN-CONTAINING CATALYST FOR ISOCYANATE REACTIONS
Fritz Hostettler and Eugene F. Cox, Charleston, W. Va., assignors to Union Carbide Corporation, a corporation of New York
No Drawing. Filed Apr. 26, 1960, Ser. No. 24,650
1 Claim. (Cl. 260—18)

1. A process for producing a urethane which comprises reacting
(a) a compound having at least one isocyanato group with
(b) a compound having at least one alcoholic hydroxyl group, in the presence of a catalytic amount of stannous octoate, wherein the sole reactive groups present in both said compounds are isocyanato and aliphatic alcoholic hydroxyl groups, respectively.

3,398,107
MODIFIED XYLENE-FORMALDEHYDE RESINS
Charles A. Rowe, Jr., Elizabeth, Clifford W. Muessig, Roselle, and Stephen A. Yuhas, Jr., Perth Amboy, N.J., assignors to Esso Research and Engineering Company, a corporation of Delaware
No Drawing. Filed Oct. 28, 1965, Ser. No. 505,474
21 Claims. (Cl. 260—19)

Phenol-modified xylene formaldehyde resins that are highly attractive varnish composition components are formed by contacting xylene-formaldehyde resins having a molecular weight, as determined by vapor phase osmometry, between about 500 to 1,000 and oxygen contents varying from about 7 to 16 weight percent with critical amounts of a hydrocarbon substituted phenol compound in the presence of an acid catalyst.

3,398,108
VINYL HALIDE RESINS STABILISED WITH METAL-ORGANIC COMPOUNDS
John H. W. Turner, Chapel-en-le-Frith, England, assignor to Hardman & Holden Limited, Manchester, Lancashire, England, a British company
No Drawing. Filed Mar. 30, 1964, Ser. No. 355,960
Claims priority, application Great Britain, Apr. 5, 1963, 13,597/63
5 Claims. (Cl. 260—23)

This invention relates to a vinyl resin which has been stabilized by incorporating therein a metal-organic compound containing at least one divalent metal, and at least one trivalent or tetravalent element joined together through oxygen atoms, together with carboxylic acid radicals and hydrocarbonoxy radicals attached to the divalent and/or trivalent or tetravalent atoms or mixtures of two or more such metal organic compounds. The metal-organic compound is preferably used to the extent of about 3⅓ to 5 parts by weight of said compound per hundred parts of resin.

3,398,109
BLACK ENAMELS
John F. Hardy and Porter F. Gridley, Andover, Mass., assignors to Cabot Corporation, Boston, Mass., a corporation of Delaware
No Drawing. Filed June 1, 1965, Ser. No. 460,514
15 Claims. (Cl. 260—29.4)

Essentially non-aqueous, thermosetting, black enamel coating compositions of the true solution type having unusually high color and jetness are disclosed. These comprise about 20–60% by weight of said composition of a thermosetting resin dissolved in an organic solvent, said thermosetting resin being characterized in that a major portion thereof is produced from monomers selected from the group consisting of organic esters of acrylic acid, organic esters of methacrylic acid and derivatives thereof and about 1–6% by weight of said composition of a channel carbon black which has been subjected to oxidative after treatment, said carbon black characterized as having physically associated therewith both water at about 5–15% by weight of said black and an anionic dispersing agent at about 5–20% by weight of said black.

3,398,110
WAXY COPOLYMERS, USEFUL IN POLISH COMPOSITIONS, AND CONTAINING PENDANT CARBOXYLIC AND ESTER GROUPS
Gustave J. Klein, Great Neck, and William P. O'Rourke, Babylon, N.Y., assignors to Knomark, Inc., Springfield, Gardens, N.Y., a corporation of New York
No Drawing. Filed Oct. 23, 1965, Ser. No. 504,100
9 Claims. (Cl. 260—33.4)

Film-forming polymers and liquid self-polishing compositions containing the same, said polymers comprising a hydrocarbon chain portion and carboxylic acid groups pendant therefrom, which groups are partially esterified with a monohydric alcohol having at least 22 carbon atoms.

3,398,111
CHEMICAL PROMOTION OF A RUBBER-FILLER COMPOSITION WITH TETRAMETHYLENE BIS-(AZIDOFORMATE)
William D. Willis, Limestone Acres, Del., assignor to Hercules Incorporated, a corporation of Delaware
No Drawing. Filed Jan. 25, 1965, Ser. No. 427,919
11 Claims. (Cl. 260—33.6)

The process involves chemical promotion of a rubber-filler composition, followed by addition of conventional rubber compounding ingredients and curing of the resulting mixture. The promoter utilized is tetramethylene bis (azidoformate).

3,398,112
ONE-COMPONENT SILOXANE ELASTOMER
Wendell L. Johnson, Elizabethtown, Ky., and Marcus E. Ross, Midland, Mich., assignors to Dow Corning Corporation, Midland, Mich., a corporation of Michigan
No Drawing. Filed June 1, 1965, Ser. No. 460,557
5 Claims. (Cl. 260—37)

Room temperature curing silicone rubber compositions which when cured have tensile strengths upwards of 800 p.s.i. and tear strengths of upwards of 150 pounds per inch and which are easily extruded in the uncured state are obtained by using the combination of silicone polymer having substituents of the formula —ON=CR_2 and a carbon black having an average particle diameter of less than 50 millimicrons and a structure index of from 130 to 200.

3,398,113
THERMOSETTING RESIN PIGMENT COMPOSITION AND PROCESS THEREFOR
Henry W. Godshalk and René A. Willis, Jr., Holland, Mich., assignors, by mesne assignments, to Chemetron Corporation, Chicago, Ill., a corporation of Delaware
No Drawing. Filed Dec. 1, 1964, Ser. No. 415,203
19 Claims. (Cl. 260—41)

A water wet pigment is incorporated into a thermosetting resin without gel formation by the addition of a higher alkyl or higher alkenyl hydroxamic acid having 10–22 carbons to a mixture of the thermosetting resin and the water wet pigment.

3,398,114
LIGHT AND HEAT STABILITY OF POLYVINYL CHLORIDE RESINS
Mark W. Pollock, New York, N.Y., assignor to Argus Chemical Corporation, Brooklyn, N.Y., a corporation of New York
No Drawing. Continuation-in-part of application Ser. No. 336,887, Jan. 10, 1964. This application Dec. 10, 1964, Ser. No. 417,513
9 Claims. (Cl. 260—45.75)

The resistance to deterioration due to heat and/or light of polyvinyl chloride resins is improved by incorporating therein a stabilizer composition containing an organotin moiety, a phenolic antioxidant and a mercaptoacetic acid moiety, and/or an alpha-mercaptopropionic acid moiety and/or a thiomalic acid moiety.

3,398,115
POLYOLEFINS STABILIZED WITH MIXTURES COMPRISING AN ORGANIC PHOSPHORUS ACID, PHOSPHITE TRIESTER AND THIODIPROPIONATE
Arthur C. Hecker, Forest Hills, N.Y., and Norman L. Perry, Wayne, N.J., assignors to Argus Chemical Corporation, Brooklyn, N.Y., a corporation of New York
No Drawing. Continuation-in-part of application Ser. No. 161,369, Dec. 22, 1961. This application Aug. 27, 1965, Ser. No. 483,293
13 Claims. (Cl. 260—45.85)

1. A stabilizer combination for use in improving the resistance of olefinic polymers to deteriorate in physical properties on exposure to heat, consisting essentially of from about 0.1 to about 25 parts by weight of an organic phosphorus acid containing trivalent phosphorus, and from about 2.4 to about 175 parts by weight of an organic phosphite triester, the stabilizers being compatible with polypropylene and having a low vapor pressure at polypropylene working temperatures.

4. A stabilizer combination in accordance with claim 1 including in addition from about 5 to about 100 parts by weight of a thiodipropionic acid ester.

3,398,116
PHENOLIC AND THIODIESTER-STABILIZED POLY-ALPHA-OLEFINS
Silvio L. Giolito, Whitestone, N.Y., assignor to Stauffer Chemical Company, New York, N.Y., a corporation of Delaware
No Drawing. Filed Oct. 23, 1965, Ser. No. 504,189
18 Claims. (Cl. 260—45.85)

A solid poly-alpha-olefin composition comprising a solid poly-alpha-olefin prepared from an alpha-monoolefinic aliphatic hydrocarbon having from 2 to 10 carbon atoms containing a stabilizer combination comprising from 0.001% to 10.0% by weight based on said poly-alpha-olefin of a thiodicarboxylic acid thioether ester having the formula

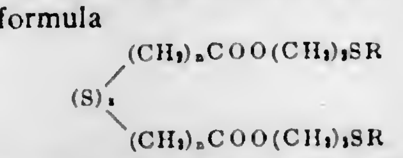

wherein R is alkyl of from 8 to 18 carbon atoms, x is an integer of from 1 to 2, and n is an integer of from 1 to 3, and about 0.001% to 10.0% by weight based on said poly-alpha-olefin of a phenolic antioxidant selected from the class consisting of:

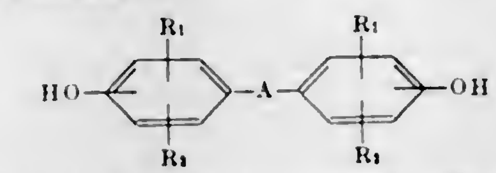

wherein R_1 and R_2 are selected from the class consisting of hydrogen and alkyl of from 1 to 18 carbon atoms, A is selected from the class consisting of:

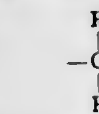

wherein R_3 and R_4 have the values as above given for R_1 and R_2,

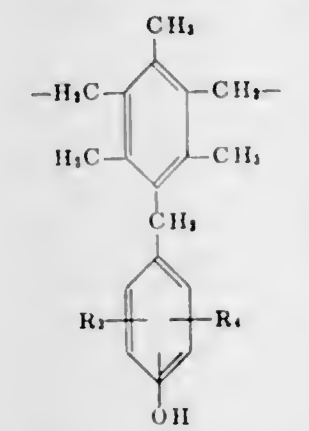

and

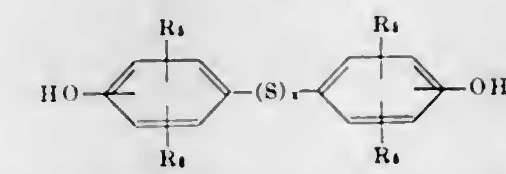

wherein R_5 and R_6 are selected from the class consisting of hydrogen, alkyl of from 1 to 18 carbon atoms, benzyl and lower chain alkylated benzyl, and x is an integer of from 1 to 3.

3,398,117
PROCESS FOR THE PREPARATION OF ORGANOPOLYSILOXANES
Jean-Henri Baronnier and Georges Leon Pagni, Lyon, France, assignors to Rhone-Poulenc S.A., Paris, France, a French body corporate
No Drawing. Filed Feb. 8, 1967, Ser. No. 614,558
Claims priority, application France, Feb. 11, 1966, 49,335
8 Claims. (Cl. 260—46.5)

The invention provides a process for the preparation of organopolysiloxanes by rearrangement and polymerisation of cyclic or linear organopolysiloxanes using as catalyst a combination of an alkali and a triaminophosphine oxide such as tris(dimethylamino)phosphine oxide.

3,398,118
PROCESS FOR THE PREPARATION OF ORGANOPOLYSILOXANES
Jean-Henri Baronnier and Georges Leon Pagni, Lyon, France, assignors to Rhone-Poulenc S.A., Paris, France, a French body corporate
No Drawing. Filed Feb. 8, 1967, Ser. No. 614,559
Claims priority, application France, Feb. 11, 1966, 49,336
12 Claims. (Cl. 260—46.5)

The invention provides a process for the preparation of organopolysiloxanes by rearrangement and polymerization of cyclic or linear organopolysiloxanes using as catalyst the product obtained by the reaction of an alkali metal with an aminophosphine oxide.

3,398,119
POLYMERIZATION OF OXIRANE MONOEPOXIDES USING AN ORGANOMETALLIC COMPOUND WITH A PHENOL AS COCATALYSTS
Kenneth T. Garty, Somerville, and Thomas B. Gibb, Jr., Murray Hill, N.J., assignors to Union Carbide Corporation, a corporation of New York
No Drawing. Filed July 1, 1959, Ser. No. 824,192
19 Claims. (Cl. 260—47)

1. Method for the production of a polymer of an epoxide compound which comprises contacting a monomeric oxirane monoepoxide, which is free of ester, acid, amino and aldehyde groups, with at least about 0.01 percent by weight, based on the weight of said oxirane monoepoxide, of an organometallic compound having the formula:

$$R_1—Me—R_2$$

wherein R_1 and R_2 are hydrocarbon radicals and Me is a metal of Group II of the Periodic Table, and with from about 0.01 to about 2.5 moles of a phenol, which is free of ester, acid, amino and aldehyde groups, per mole of said organometallic compound, whereby said oxirane monoepoxide polymerizes to form a polymer.

3,398,120
POLYESTERS OF DIACID HALIDE, ALKYL BISPHENOL AND GLYCOL
Raymond R. Hindersinn, Lewiston, and Edward J. Quinn, Tonawanda, N.Y., assignors to Hooker Chemical Corporation, Niagara Falls, N.Y., a corporation of New York
No Drawing. Filed July 16, 1963, Ser. No. 295,504
8 Claims. (Cl. 260—47)

1. A linear, high molecular weight polyester, having an intrinsic viscosity of at least 0.40 deciliter/gram when measured in sym-tetrachloroethane at 30 degrees centigrade, of components consisting essentially of (A) a diacid halide of the formula X—Y—$(Z)_n$—Y′—X wherein Z is a bivalent radical selected from the group consisting of alkylene, arylene, cycloalkylene and alkylarylene; Y and Y′ are independently selected from the group consisting of CO, SO and SO_2; X is halogen and n is an integer from 0 to 1, and (B) dihydroxy compounds wherein from 40 to about 70 mole percent of the dihydroxy compound is a bisphenol of the formula:

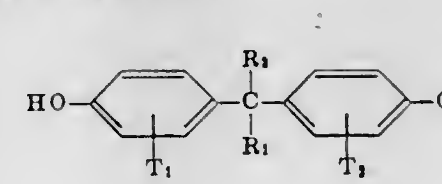

wherein T_1 and T_2 are alkyl of 1 to 6 carbon atoms; and R_1 and R_2 are independently selected from the group consisting of alkyl, cycolalkyl and phenyl, and the balance of dihydroxy compound is a saturated aliphatic glycol.

3,398,121

NOVEL POLYESTERS DERIVED FROM ALPHA-(p-ACYLOXYPHENYL) CUMIC ACIDS OR DERIVATIVES THEREOF

Bryce C. Oxenrider, Florham Park, and Morton H. Litt and Ferdinand M. Slavik, Morristown, N.J., assignors to Allied Chemical Corporation, New York, N.Y., a corporation of New York

Filed Aug. 17, 1964, Ser. No. 389,849

5 Claims. (Cl. 260—47)

This invention relates to novel polymers possessing high glass transition temperatures, said polymers comprising repeating units derived from either an alpha-(p-acyloxyphenyl) cumic acid or a compound hydrolyzable thereto. These polymers are particularly useful in the preparation of heat resistant films and fibers.

3,398,122

PHENOLIC CONDENSATES

Alvin F. Shepard and Bobby F. Dannels, Grand Island, N.Y., assignors to Hooker Chemical Corporation, Niagara Falls, N.Y., a corporation of New York

No Drawing. Filed Nov. 30, 1964, Ser. No. 414,897

8 Claims. (Cl. 260—50)

Novel esters of a member of the silicon family and a phenol-aldehyde or phenol-ketone condensate are characterized in that:

(1) A major proportion of the moiety of the member of the silicon family has the structure

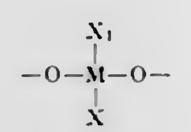

in which the unsatisfied bonds are attached to aryl nuclei of the same phenolic condensate, and in which M is an atom of the silicon family, X_1 is halogen, hydrocarbyloxy, halogen-substituted hydrocarbyloxy, and X is halogen, hydrocarboxy, halogen-substituted hydrocarbyloxy, or an aryloxy radical of the same phenolic condensate to which M is attached; provided that when M is selected from silicon, germanium and tin, X and X_1 can be selected from hydrogen, hydrocarbyl, and halogen substituted hydrocarbyl;

(2) At least 60 percent of the phenol-aldehyde or phenol-ketone condensate has o,o'-alkylidene linkages, and

(3) The phenolic condensate has an average number or aryl nuclei per molecule in the range of 2.2 to 8. Suitable members of the silicon family of elements are silicon, titanium, germanium, zirconium and tin.

The thermoplastic products of the invention can be modified to produce additional thermoplastic products such as reaction products with an oxyalkylation agent. Thermosetting products can be produced by curing the thermoplastic products of the invention with agents such as hexamethylene tetramine, or other donors of methylene radicals, or polyepoxides, or polyisocyanates, and the like. These thermoplastic and thermosetting products are used to produce shaped articles such as molded articles, laminates, protective coatings, including drying oils and varnishes, abrasive structures, friction elements and the like.

3,398,123

COPOLYMERS OF FLUOROALDEHYDES WITH ETHYLENICALLY UNSATURATED MONOMERS

Edward G. Howard, Jr., Hockessin, Del., assignor to E. I. du Pont de Nemours and Company, Wilmington, Del., a corporation of Delaware

No Drawing. Filed Nov. 9, 1964, Ser. No. 409,984

11 Claims. (Cl. 260—73)

Described and claimed are solid copolymers of certain polyfluoroaldehydes, e.g., perfluorobutanal-1, and certain ethylenically unsaturated compounds, e.g., ethylene, and their preparation by direct reaction between the precursors under free radical generating condition. The copolymers have the usual utilities of solid polymers.

3,398,124

PROCESS FOR THE PRODUCTION OF POLYETHYLENE TEREPHTHALATE

Walter Rein, Obernburg, Erhard Siggel, Seckmauern, and Hans-Martin Koepp, Obernburg, Germany, assignors to Vereinigte Glanzstoff-Fabriken AG., Wuppertal-Elberfeld, Germany

No Drawing. Filed Feb. 7, 1966, Ser. No. 525,302

Claims priority, application Germany, Feb. 11, 1965, V 27,755

6 Claims. (Cl. 260—75)

Process of transesterifying dimethyl terephthalate with ethylene glycol and polycondensing the resulting diglycol terephthalate in which cobalt tungstate is used as the essential polycondensation catalyst.

3,398,125

POLYMERIZATION OF ALLYLIC ESTERS

Sol A. Mednick, Baltimore, Md., assignor to FMC Corporation, New York, N.Y., a corporation of Delaware

No Drawing. Filed Sept. 8, 1965, Ser. No. 485,939

5 Claims. (Cl. 260—78.4)

This specification discloses a method of producing diallyl phthalate prepolymer by polymerizing diallyl phthalate monomer at a temperature under 225° C. while continuously adding to the polymerization mixture a free-radical polymerization promoter whose effect is sharply reduced within a few minutes after the addition is stopped. The polymerization is completed by heat alone to the point where the residual polymerization promoter is reduced to a few parts per million. The prepolymer can be separated by a conventional solvent extraction process or in the wiped film distillation process taught in copending Ser. No. 485,882 filed simultaneously with this application.

3,398,126

PROPYLENE OXIDE-BUTADIENE MONOXIDE COPOLYMERS CROSS-LINKED WITH MALEIC ANHYDRIDE

Michael J. Skrypa, Camillus, N.Y., assignor to Allied Chemical Corporation, New York, N.Y., a corporation of New York

No Drawing. Filed Mar. 24, 1965, Ser. No. 442,531

6 Claims. (Cl. 260—78.5)

This invention relates to new thermoset cross-linked resins of a propylene oxide-butadiene monoxide copolymer, cross-linked with maleic anhydride. The propylene oxide-butadiene monoxide copolymer contains 1 to 13 allylic groups, preferably 4 to 8 allylic groups per 100 grams of copolymer. Maleic anhydride is employed in a proportion of about 0.25 to 3 mols, preferably 0.9 to 3 mols, with an especially preferred range of 1.1 to 1.3 mols, per double bond in the copolymer. The cross-linked propylene oxide-butadiene monoxide copolymers are advantageously employed as castings, laminates, surface coatings, and adhesive agents which are resistant to chipping, cracking, and atmospheric degradation even at elevated temperatures.

3,398,127

PHOSPHORUS CONTAINING POLYMERS AND COPOLYMERS

Carlhans Süling, Leverkusen, and Karl-Erwin Schnalke, Cologne-Flittard, Germany, assignors to Farbenfabriken Bayer Aktiengesellschaft, Leverkusen, Germany, a corporation of Germany

No Drawing. Filed Mar. 21, 1966, Ser. No. 535,702

Claims priority, application Germany, May 24, 1965, F 46,134

12 Claims. (Cl. 260—79.3)

Phosphorus containing polymers and copolymers from phosphoric acid diester-(N-sulfonyl)-amides containing at least one polymerizable carbon-carbon double bond useful as ion exchange resins, soil improving agents, cross-linking agents, dispersing agents and for making shaped articles.

3,398,128

COPOLYMERS OF FLUORINATED DIENES AND PROCESS FOR PREPARING SAME

Archibald N. Bolstad, Maplewood, N.J., and John M. Hoyt, Woodside, Flushing, N.Y., assignors, by mesne assignments, to Minnesota Mining and Manufacturing Company, St. Paul, Minn., a corporation of Delaware

No Drawing. Filed July 1, 1955, Ser. No. 519,651

6 Claims. (Cl. 260—87.7)

Copolymers of 1,1,2-trifluorobutadiene-1,3 and another fluorinated 1,3-diene having from 4 to 5 carbon atoms per molecule containing two fluorine atoms on a terminal carbon atom and at least one hydrogen atom and the process for copolymerization of the monomers to produce such copolymers.

3,398,129

PROCESS FOR PREPARING PREDOMINANTLY CRYSTALLINE ALPHA-OLEFIN POLYMERS

Irving Leibson, Odessa, Tex., and Jonas B. Bingeman, Tarzana, Calif., assignors to Rexall Drug and Chemical Company, Los Angeles, Calif., a corporation of Delaware

Filed Aug. 30, 1963, Ser. No. 305,770

7 Claims. (Cl. 260—93.7)

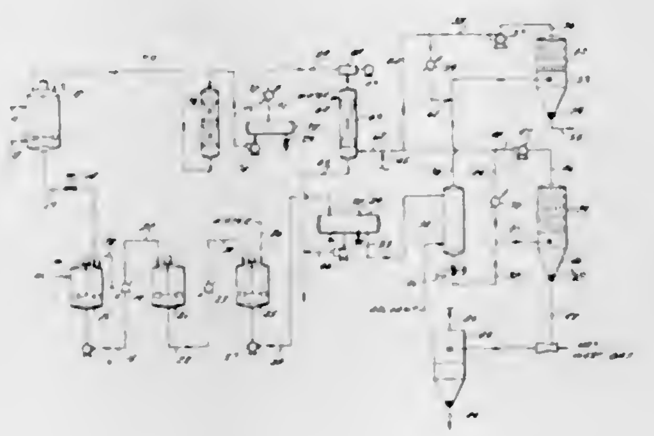

1. In a process wherein an alpha-olefin is polymerized to a predominantly crystalline form in a hydrocarbon dispersing medium and the resulting polymer is contacted in a catalyst residue removal zone to remove catalyst residues therefrom and to obtain a substantially uncontaminated deashed polymer and wherein said deashed polymer is in the form of a slurry in said dispersing medium and contains at least 2 percent by weight of an atactic fraction and wherein the polymer is subsequently treated with a hydrocarbon solvent medium containing from 3 to 5 carbon atoms to upgrade said polymer by removing substantially the atactic fraction therefrom, the improved process which consists essentially of the steps:

(a) contacting said deashed polymer in a countercurrent extraction zone with a hydrocarbon solvent by introducing from 0.5 to 10 pounds of said hydrocarbon solvent containing from 3 to 5 carbon atoms per pound of polymer, said countercurrent contact occurring at a temperature of from 100° to 250° F. and at a pressure sufficient to maintain the hydrocarbon solvent in liquid form,

(b) separating from said countercurrent contacting zone two separate streams, one an overhead solution stream consisting essentially of said hydrocarbon solvent and hydrocarbon dispersing medium containing substantially all of said atactic fraction dissolved therein and the other a slurry stream consisting essentially of said hydrocarbon solvent and hydrocarbon dispersing medium containing therein solid essentially crystalline polymer particles,

(c) introducing said solution stream into a first low pressure flashing zone and said slurry stream into a second low pressure flashing zone, both said low pressure flashing zones being maintained at a temperature of from 50° to 200° F. and a pressure slightly above atmospheric pressure and

(d) separately recovering from said first low pressure flashing zone hydrocarbon solvent and hydrocarbon dispersing medium vapor overhead and a solid atactic polymer precipitated from said solution stream in powder form, and separately recovering from said second low pressure flashing zone hydrocarbon solvent and hydrocarbon dispersing medium vapor overhead and a predominantly solid uncontaminated crystalline polymer in powder form containing less than 5 percent volatiles.

3,398,130

CATALYST AND PROCESS FOR POLYMERIZATION

John Boor, Jr., El Cerrito, Calif., assignor to Shell Oil Company, New York, N.Y., a corporation of Delaware

No Drawing. Filed Sept. 17, 1962, Ser. No. 224,230

15 Claims. (Cl. 260—93.7)

8. In the polymerization of alpha-monoolefinic hydrocarbon material of 3 to 7 carbon atoms per molecule to form solid, crystallizable polymer, the improvement which comprises catalyzing the polymerization with a catalyst consisting essentially of an aluminum dihalide having the formula $RAlX_2$ wherein R is a hydrocarbon radical containing 1 to 12 carbon atoms and selected from the group consisting of alkyl, aryl, and aralkyl and X is a halogen atom, a trivalent halide of titanium, and an acetylacetonate of a metal from the group consisting of manganese, chromium and iron, the molar ratio of said acetylacetonate to said aluminum dihalide being within the range of 0.1:1 to 1:1.

3,398,131

HOMOPOLYMERIZATION OF ETHYLENE FOR THE PRODUCTION OF SOLID AND LIQUID POLYMERS

Herman S. Bloch, Skokie, and Ernest L. Pollitzer, Hinsdale, Ill., assignors to Universal Oil Products Company, Des Plaines, Ill., a corporation of Delaware

No Drawing. Filed Apr. 22, 1964, Ser. No. 361,886

13 Claims. (Cl. 260—94.9)

Production of solid and liquid polymers by homopolymerization of ethylene in the presence of an alkali metal disposed on a high surface area inorganic oxide support promoted with an alkali or alkaline earth metal compound in sufficient amount to neutralize the acidity of the support.

3,398,132
1:2-CHROMIUM COMPLEX MIXED AZO DYES
Johannes Dehnert, Ludwigshafen (Rhine), Germany, assignor to Badische Anilin- & Soda-Fabrik Aktiengesellschaft, Ludwigshafen (Rhine), Germany
No Drawing. Filed Oct. 18, 1965, Ser. No. 497,475
Claims priority, application Germany, Oct. 29, 1964, B 79,116
7 Claims. (Cl. 260—145)

A 1:2 chromium complex dye in which one atom of chromium is combined with one azo dye molecule and one disazo dye moleucule, the dye bearing a sulfonamide group. The resulting dyestuff is useful for dyeing cellulosic materials in the presence of a fixing agent.

3,398,133
WATER-SOLUBLE REACTIVE DISAZO TRIAZINE CONTAINING DYESTUFFS
Ian Knowles Barben and Cecil Vivian Stead, Manchester, England, assignors to Imperial Chemical Industries Limited, London, England, a corporation of Great Britain
No Drawing. Filed Dec. 30, 1965, Ser. No. 517,823
Claims priority, application Great Britain, Jan. 8, 1965, 992/65
7 Claims. (Cl. 260—153)

A water-soluble azo dyestuff of the formula

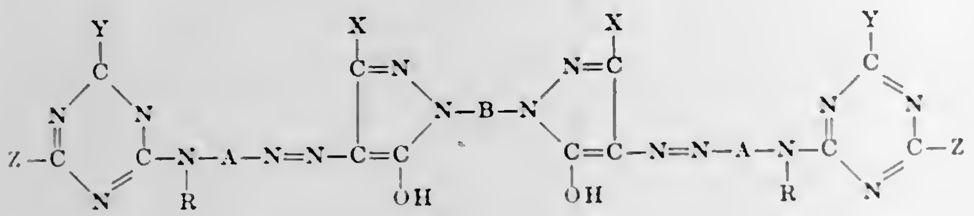

wherein B represents a divalent carbocylic aromatic radical selected from the group consisting of benzene, diphenyl and stilbene radicals in which the phenyl nuclei can be substituted by substituents selected from the group consisting of chlorine, methyl and sulphonic acid,

each A represents a divalent benzene or naphthalene radical which can be substituted by CO_2H or SO_3H,
each X represents a methyl, carboxyl or carbo-lower alkoxy group,
each R represents hydrogen or a lower alkyl group,
each Y represents chlorine or bromine, and
each Z represents a chlorine or bromine atom or an amino, lower alkoxy or mono- or di-sulphoanilino group.

3,398,134
REACTIVE AZO DYES DERIVED FROM 3-(4-AMINOPHENYL) - 5 - CHLORO - 1,2,4 - THIODIAZOLE AS THE DIAZO COMPONENT
Werner Ball, Heidelberg, and Erwin Hahn, Viernheim, Hesse, Germany, assignors to Badische Anilin- & Soda-Fabrik Aktiengesellschaft, Ludwigshafen (Rhine), Germany
No Drawing. Filed Oct. 18, 1965, Ser. No. 497,476
Claims priority, application Germany, Oct. 28, 1964, B 79,108
7 Claims. (Cl. 260—157)

Water-soluble reactive azo dyes of the formula

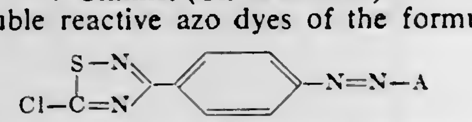

where A is the radical of the coupling component of the formulae

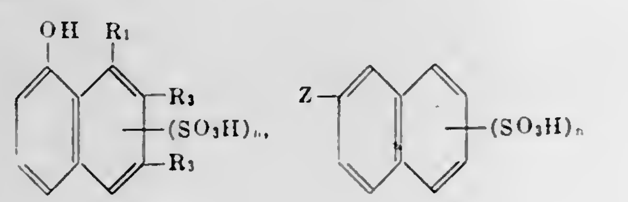

or

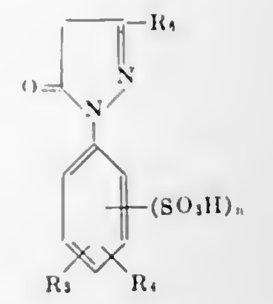

in which R_1 is hydrogen, amino, acetylamino, benzoylamino, β-chloropropionylamino or phenylureido, R_2 is hydrogen, 4-sulfophenylazo or 4-nitro-2-sulfophenylazo, R_3 is hydrogen, fumarylamino, succinylamino or β-sulfopropionylamino, R_4 is hydrogen, chloro or methyl, R_5 is hydrogen or chloro, R_6 is methyl or carboxy, z is hydroxyl or amino, n is one of the integers 1 or 2 with the proviso that the sulfo groups are attached formulae a and b in the 3, 4, 5, 6, 7 or 8 positions and further that only one of R_1, R_2 and R_3 can be other than hydrogen. The dyestuffs dye cellulosic fibers with high color strength and excellent dyebath exhaustion.

3,398,135
2-CYANO-4-NITRO-6-HALOGENO-2'-ACYLAMINO-4'-DIALKYLAMINO-1,1'-AZOBENZENE DYES
Curt Mueller, Basel, Basel-Stadt, Switzerland, assignor to Sandoz Ltd. (also known as Sandoz AG), Basel, Switzerland
No Drawing. Continuation-in-part of application Ser. No. 344,538, Feb. 13, 1964. This application June 21, 1967, Ser. No. 647,641
Claims priority, application Switzerland, Feb. 15, 1963, 1,945/63
10 Claims. (Cl. 260—205)

Disperse dyes of the 2-cyano-4-nitro-6-halogeno-2'-acylamino-4'-dialkylamino-1,1'-azobenzene series build up excellently from aqueous dispersion on textile materials made of fully synthetic or semi-synthetic hydrophobic high molecular organic substances. Resulting dyeings are extremely fast to thermofixation, sublimation, pleating, gas fumes, cross-dyeing, dry cleaning, chlorine, water, washing and perspiration.

3,398,136
BENZOPHENONE MONOAZO DYES
Wolfgang Groebke, Oberwil, Basel-Land, and Curt Mueller, Basel, Switzerland, assignors to Sandoz Ltd. (also known as Sandoz A.G.), Basel, Switzerland
No Drawing. Filed May 19, 1966, Ser. No. 551,231
Claims priority, application Switzerland, July 12, 1965, 9,732/65
12 Claims. (Cl. 260—207)

2-benzoylphenyl-azo-(4-tert. amino)benzene dyes produce dyeings which are fast to light, thermofixation, sublimation, pleating, gas fumes, cross-dyeing, dry cleaning, clorine and wet tests.

3,398,137
2-METHYLSULPHONYL-4-NITRO-2'-ACYLAMINO-4'-DIALKYLAMINO-1,1'-AZOBENZENE DYES
Curt Mueller, Basel, Basel-Stadt, Switzerland, assignor to Sandoz Ltd. (also known as Sandoz AG), Basel, Switzerland
No Drawing. Continuation-in-part of application Ser. No. 344,538, Feb. 13, 1964. This application June 21, 1967, Ser. No. 647,640
Claims priority, application Switzerland, Feb. 15, 1963, 1,945/63
10 Claims. (Cl. 260—207)

Disperse dyes of the 2-methylsulphonyl-4-nitro-2'-acylamino-4'-dialkylamino-1,1'-azobenzene series build up excellently from aqueous dispersion on textile materials made of fully synthetic or semi-synthetic hydrophobic high molecular organic substances. Resulting dyeings are extremely fast to thermofixation, sublimation, pleating, gas fumes, cross-dyeing, dry cleaning, chlorine, water, washing and perspiration.

3,398,138
NOVEL CARDENOLIDES AND DERIVATIVES
Yvon Lefebvre, Pierrefonds, Quebec, and Jean-Marie Ferland, Montreal, Quebec, Canada, assignors to American Home Products Corporation, New York, N.Y., a corporation of Delaware
No Drawing. Filed May 24, 1966, Ser. No. 552,389
17 Claims. (Cl. 260—210.5)

Novel cardenolides of the general formula

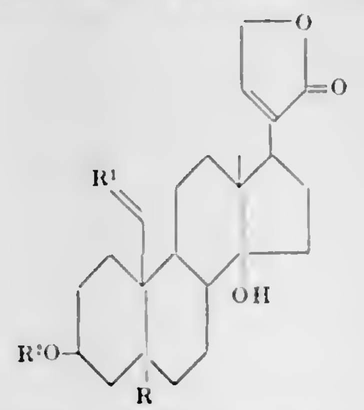

wherein R represents hydrogen or hydroxyl, R^1 represents two atoms of hydrogen or oxygen, R^2 is hydrogen, a lower aliphatic acyl group containing from two to four carbon atoms or the glucoside residue. The compounds have cardiotonic and mineralocorticoid activity and dosage forms thereof are disclosed. Also disclosed is a process for making the new compounds starting with 17β-[3'-furyl]-substituted androstanes.

3,398,139
PROCESS FOR PREPARING 2-AMINO-BENZODIAZEPINES
George Francis Field, Nutley, and Leo Henryk Sternbach, Upper Montclair, N.J., assignors to Hoffmann-La Roche Inc., Nutley, N.J., a corporation of New Jersey
No Drawing. Continuation-in-part of applications Ser. No. 358,919, Apr. 10, 1964, and Ser. No. 400,193, Sept. 29, 1964. This application Dec. 3, 1964, Ser. No. 415,793
7 Claims. (Cl. 260—239)

1. A method of preparing a compound of the formula

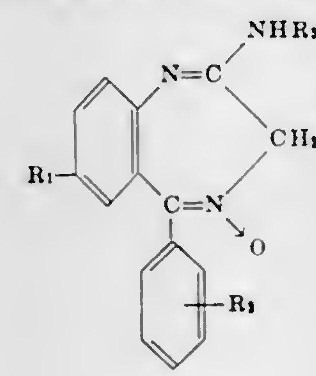

wherein R_1 is selected from the group consisting of hydrogen, halogen, lower alkyl, lower alkoxy, nitro, trifluoromethyl, cyano and lower alkylthio; R_2 is selected from the group consisting of hydrogen and halogen; and R_3 is selected from the group consisting of hydrogen and lower alkyl and lower alkenyl
which comprises treating a compound of the formula

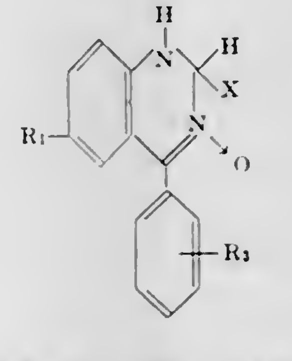

wherein R_1 and R_2 have the same significance as above and X is an α,α-dihalo methyl group
with a member selected from the group consisting of ammonia and lower alkylamine and lower alkenylamine.

3,398,140
STEROIDO[17.16-c]PYROZOLES AND PREPARATION THEREOF
Raymond O. Clinton, East Greenbush, N.Y., assignor to Sterling Drug Inc., New York, N.Y., a corporation of Delaware
No Drawing. Filed Aug. 24, 1959, Ser. No. 835,434
38 Claims. (Cl. 260—239.5)

1. A steroido[17.16-c]pyrazole in which the steroid moiety has from seventeen to about twenty-three carbon atoms exclusive of ester radicals, and is selected from the group consisting of the estrane, androstane and etiocholane series.

3,398,141
QUINOXALINE-DI-N-OXIDES
Makhluf J. Haddadin and Costas H. Issidorides, Beirut, Lebanon, assignors to Research Corporation, New York, N.Y., a corporation of New York
No Drawing. Filed Jan. 12, 1966, Ser. No. 520,061
7 Claims. (Cl. 260—239.5)

Quinoxaline-di-N-oxides are prepared by condensing an isobenzofuroxan with an enamine.

3,398,142
3β-SUBSTITUTED-4-PREGNENES
David J. Marshall, Cote St. Luc, Quebec, Canada, assignor to American Home Products Corporation, New York, N.Y., a corporation of Delaware
No Drawing. Filed June 10, 1963, Ser. No. 286,475
Claims priority, application Canada, June 23, 1962, 852,294
3 Claims. (Cl. 260—239.55)

1. A compound of the formula

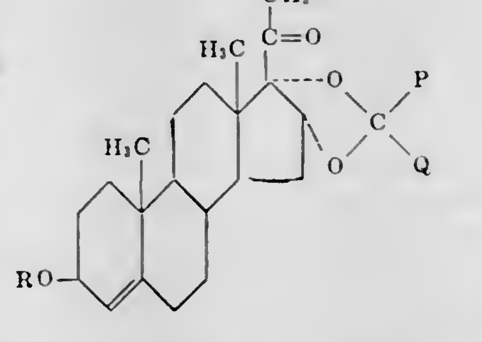

wherein R is selected from the group consisting of hydrogen and lower alkanoyl, P represents lower alkyl, and

Q is selected from the group consisting of lower alkyl and phenyl.

3,398,143
PROCESS FOR THE PREPARATION OF 4,4'-BIS-(4-AMINO - 6 - ARYLAMINO - s - TRIAZIN - 2 - YLAMINO)-2,2'-STILBENEDISULFONIC ACID
Sigmund C. Catino, Castleton, and Albert F. Strobel, Delmar, N.Y., assignors to GAF Corporation, a corporation of Delaware
No Drawing. Filed Sept. 29, 1964, Ser. No. 400,237
7 Claims. (Cl. 260—240)

An improved method for preparing 4,4'-bis-(4-amino-6-arylamino-s-triazin-2-ylamino) - 2,2' - stilbenedisulfonic acid compounds, useful as optical brightening agents, requiring sequential reaction of 4,4'-bis-(4,6-dichloro-s-triazin-2-ylamino)-2,2'-stilbenedisulfonic acid first with ammonia and then with an arylamine.

3,398,144
SUBSTITUTED 3-AMINO-2'-HYDROXY-ACRYLOPHENONES
Real Laliberte, Laval, Quebec, and David J. Campbell, Pincourt, Quebec, Canada, assignors to American Home Products Corporation, New York, N.Y., a corporation of Delaware
No Drawing. Filed Mar. 19, 1966, Ser. No. 538,213
6 Claims. (Cl. 260—240)

1. A compound of the formula

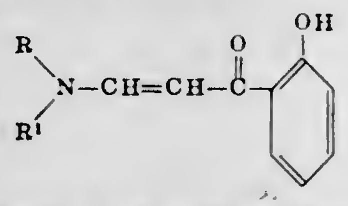

wherein that portion of the molecule designated by

is selected from the following: R is hydrogen and R^1 is selected from the group which consists of pyridyl and pyridylmethyl groups; and R and R^1 together with the nitrogen are selected from the group which consists of N'-phenylpiperazine and N-morpholino.

3,398,145
DYES FOR PHOTOGRAPHIC FILTER AND ANTIHALATION LAYERS
Joseph Bailey, Wealdstone, Harrow, Middlesex, England, assignor to Eastman Kodak Company, Rochester, N.Y., a corporation of New Jersey
Original application July 10, 1961, Ser. No. 122,852, now Patent No. 3,260,601, dated July 12, 1966. Divided and this application Aug. 27, 1965, Ser. No. 509,656
1 Claim. (Cl. 260—240.4)

Dyes derived from a substiuted 3-pyrrocoline are useful dyes for photographic filter and antihalation layers. The 3-pyrrocoline compound is jointed through a conjugated chain which joins the nitrogen atom of the pyrrocoline nucleus with a nitrogen atom or an oxygen atom of an indolenine nucleus, a benzoxazole nucleus, an indandione nucleus, an oxazolone nucleus, a pyrazolone nucleus, a barbituric acid nucleus, a thiobarbituric acid nucleus, a pyrrole nucleus and an indole nucleus, for example. The dyes have good spectral absorption properties and good bleaching characteristics, for example, and are readily incorporated in the colloidal material, such as gelatine, used to coat the layers. 1-butyl-3-carboxymethylhexahydro - 5 - [3 - (1 - methyl - 2 - phenyl - 3 - pyrrocolinyl sulfonic acid)allylidene]2,4,6-trioxopyrimidine and (1,2-diphenyl-3-pyrrocoline)(3-ethyl-2-benzoxazole) dimethincyanine iodide, for example, are illustrative of the dye compounds.

3,398,146
TETRAHYDRO-1,3,5-THIADIAZINE-2-THIONES
Manfred Schorr and Walter Dürckheimer, Frankfurt am Main, and Georg Lämmler, Hattersheim (Main), Germany, assignors to Farbwerke Hoechst Aktiengesellschaft vormals Meister Lucius & Bruning, Frankfurt am Main, Germany, a corporation of Germany
No Drawing. Filed June 30, 1965, Ser. No. 468,596
Claims priority, application Germany, June 30, 1964, F 43,304
8 Claims. (Cl. 260—243)

Tetrahydro-1,3,5-thiadiazine-2-thiones having antimycotic and antibacterial activity.

3,398,147
MORPHOLINOACETOHYDRAZIDE ALKYL HALIDES AND PROCESS FOR THEIR PREPARATION
Minoru Tohda, Noriaki Kuwana, and Kiyoshi Kawabe, Tokyo, Japan, assignors to Eisai Co., Ltd., Tokyo, Japan, a corporation of Japan
No Drawing. Filed June 18, 1965, Ser. No. 465,173
8 Claims. (Cl. 260—247.2)

A morpholinoacetohydrazide alkyl halide of the formula:

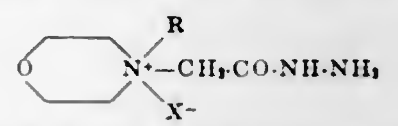

wherein R stands for an alkyl group having 1 to 4 carbon atoms and X stands for a halogen.

A process for producing a morpholinoacetohydrazide alkyl halide of the formula:

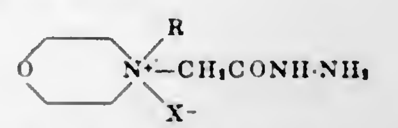

wherein R stands for an alkyl group having 1 to 4 carbon atoms and X stands for a halogen, comprising reacting an alkyl morpholinoacetate alkyl halide of the formula:

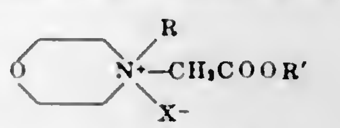

wherein R and R' stand for alkyl groups having 1 to 4 carbon atoms and X stands for a halogen, with hydrazine hydrate.

3,398,148
PENTA-AZAINDENE COMPOUNDS USEFUL AS STABILIZERS AGAINST FOG FOR SILVER HALIDE PHOTOGRAPHIC MATERIALS
Douglas James Fry and Patrick Joseph Keogh, Ilford, Essex, England, assignors to Ilford Limited, Essex, England, a British company
No Drawing. Original application Dec. 30, 1963, Ser. No. 334,644, now Patent No. 3,333,961, dated Aug. 1, 1967. Divided and this application Dec. 16, 1966, Ser. No. 632,463
17 Claims. (Cl. 260—249.5)

A new class of chemical compounds, penta-azaindene compounds of the general Formula II:

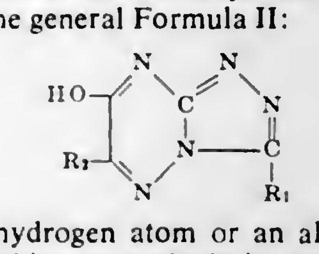

where R_1 is a hydrogen atom or an alkyl, aryl, aralkyl, mercapto, alkylthio, or aralkylthio group, and R_2 is a hydrogen atom or an alkyl, aryl, aralkyl, or alkoxycarbonyl group, with the exception of the case where, simultaneously, R_1 is a hydrogen atom and R_2 is a methyl group. The compounds are useful as stabilizing agents against fog for silver halide photographic emulsions.

3,398,149
PROCESS FOR PREPARING ADENINE
Katsura Morita, Ikeda, Osaka, Mighihiko Oghiai, Suita, Osaka, and Ryuji Marumoto, Monoo, Osaka, Japan, assignors to Takeda Chemical Industries, Ltd., Osaka, Japan
No Drawing. Filed Nov. 10, 1966, Ser. No. 593,296
Claims priority, application Japan, Nov. 12, 1965, 40/69,640
10 Claims. (Cl. 260—252)

Adenine is prepared by heating formamide with phosphorus trichloride, phosphorus oxychloride, phosphorus pentoxide, polyphosphoric acid, pyrophosphoric acid, tetrachloropyrophosphoric acid, thionyl chloride, sulfuryl chloride, chlorosulfonic acid or tosyl chloride at 70° C. to 200° C. in a sealed vessel.

3,398,150
CERTAIN 7-PHENETHYLAMINOPROPYL-THEOPHYLLINE DERIVATIVES
Karl Heinz Klingler, Langen, Hessen, Germany, assignor to Deutsche Gold- und Silber-Scheideanstalt vormals Roessler, Frankfurt am Main, Germany
No Drawing. Filed Jan. 10, 1966, Ser. No. 519,430
Claims priority, application Germany, Jan. 16, 1965, D 46,266
3 Claims. (Cl. 260—256)

7-{3-[2-(3,4-dihydroxyphenyl)-2-hydroxyethylamino]-propyl}-theophylline and method of producing the same by reacting 3,4-dihydroxy-ω-chloroacetophenone with 7-(γ-benzylamino-propyl)theophylline to produce 7-{3-[2 - (3,4 - dihydroxyphenyl - 2 - oxy-ethyl - benzylamino]-propyl}-theophylline and catalytically hydrogenating the latter to produce 7-{3-[2-(3,4-dihydroxyphenyl)-2-hydroxyethylamino]-propyl}-theophylline.

3,398,151
AZASPIRODECANEDIONES AND AZASPIROUNDECANEDIONES
Yao Hua Wu, Evansville, Ind., assignor to Mead Johnson & Company, Evansville, Ind., a corporation of Indiana
No Drawing. Continuation-in-part of application Ser. No. 523,945, Feb. 1, 1966. This application Jan. 9, 1967, Ser. No. 607,908
11 Claims. (Cl. 260—268)

8-(4-phenyl - 1 - piperazinylalkylene)-8-azaspiro[4,5]decane-7,9-diones having up to three substituents in the phenyl ring have been synthesized from the corresponding 4-phenylpiperazines and 3,3-tetramethyleneglutaric anhydride. Substitution of 3,3-pentamethyleneglutonic anhydride in the method yields the corresponding 3-azaspiro[5,5]undecane-2,4-dione derivatives. These substances have strong activity and good selectivity in suppressing conditioned avoidance response in animals and other potent pharmacologic effects. The phenyl substituents are alkoxy, alkyl, alkylthio, halogen, CF_3, NH_2, alkanoamido, and alkylsulfonamido. Alkylene is from 2 to 6 carbon atoms and may contain —O— or —C≡C—.

3,398,152
PROCESS FOR THE SYNTHESIS OF YELLOW METHINE DYES CONTAINING THE DICYANOMETHYLIDENE GROUP
David J. Wallace and Max A. Weaver, Kingsport, Tenn., assignors to Eastman Kodak Company, Rochester, N.Y., a corporation of New Jersey
No Drawing. Continuation-in-part of application Ser. No. 257,831, Feb. 12, 1963. This application Mar. 11, 1966, Ser. No. 533,407
6 Claims. (Cl. 260—288)

Process for preparing aniline and 1,2,3,4-tetrahydroquinoline compounds containing a dicyanomethylidene group, useful as dyes for hydrophobic textile materials, by condensing cyanoacetamide with a formylaniline or a formyl-1,2,3,4-tetrayhdroquinoline to obtain a carbonyl (cyano)methylidene intermediate and contacting the intermediate with a dialkylamide and phosphorus oxychloride.

3,398,153
NAPHTH[2,3-b]INDOLIZINE-6,11-DIONES
Eric Richard Inman, Renfrewshire, Hugh Macdonald Smith, Glasgow, and Ian Alexander Macpherson, Renfrewshire, Scotland, assignors to J. R. Geigy A.G., Basel, Switzerland
No Drawing. Continuation-in-part of application Ser. No. 436,282, Mar. 1, 1965. This application Oct. 12, 1965, Ser. No. 495,299
Claims priority, application Great Britain, Feb. 28, 1964, 8,323/64
5 Claims. (Cl. 260—294.9)

Colored compounds of the formula

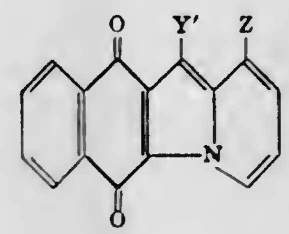

wherein Y' represents one of the radicals —CN, —CO—X', —CO—OX' and —CO—NH—X''; X' being lower alkyl and X'' being H, monocarbocyclic aryl or naphthyl, and Z being hydroxy or amino, and are useful in the preparation of heterocyclic dye-stuffs, as intermediates in the production of other heterocyclic organic compounds, etc., and as pigments for color-pigmenting materials such as polyvinyl chloride as well as for coloring stoving lacquer, with resultant excellent fastness properties.

The said colored compounds are prepared by condensing (a) 2,3-dihalogen-1,4-naphthoquinone compound with (b) a reactive methylene compound, and with (c) either 3-hydroxy-pyridine or 3-amino-pyridine, to produce a 1-hydroxy- or a 1-amino-substituted naphthindolizinedione, respectively, by heating a mixture of the three reactants, preferably in an inert organic solvent, such as ethanol, quinoline or mixtures thereof and then recovering the resulting 1-hydroxy- or 1-amino-substituted naphthindolizinedione from the reaction mixture. Preferably the process is carried out at a temperature above 50° C. and up to the reflux temperature of the reaction mixture.

3,398,154
BIPYRIDYLIUM COMPOUNDS AND HERBICIDAL COMPOSITIONS CONTAINING THE SAME
John Edward Downes, Bracknell, England, assignor to Imperial Chemical Industries Limited, London, England, a corporation of Great Britain
No Drawing. Filed Apr. 27, 1965, Ser. No. 451,344
Claims priority, application Great Britain, Apr. 29, 1964, 17,785/64
8 Claims. (Cl. 260—295)

4,4'-bipyridylium quaternary salt herbicides wherein one or both of the nitrogen heteroatoms of the 4,4'-bipyridyl nucleus are linked to the nitrogen atom of an amino or acylamido group.

3,398,155
2,6-DICHLORO-ISONICOTINAMIDE DERIVATIVES AND A METHOD FOR THEIR PREPARATION
Bruce Wayne Horrom, Waukegan, Ill., assignor to Abbott Laboratories, Chicago, Ill., a corporation of Illinois
No Drawing. Filed May 31, 1966, Ser. No. 553,692
9 Claims. (Cl. 260—295)

1. A compound of the formula

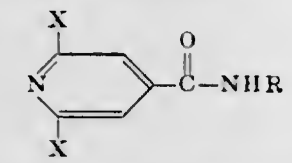

wherein each X is chlorine or bromine and R is a linear, branched or cyclic alkyl of 3–4 carbon atoms or a group of the formula —$(CY_2)_nR'$ wherein n is 1 or 2, each Y is hydrogen or methyl and R′ is C≡CH, CN, Br, Cl, OH or lower alkoxy.

3,398,156
2-ALIPHATIC-1,3-DI(4-PYRIDYL)-2-PROPANOLS
Bernard Brust, Parsippany, Troy Hills, and Rodney Ian Fryer, North Caldwell, and Leo Henryk Sternbach, Upper Montclair, N.J., assignors to Hoffmann-La Roche Inc., Nutley, N.J., a corporation of New Jersey
No Drawing. Continuation-in-part of application Ser. No. 465,706, June 21, 1965. This application June 28, 1967, Ser. No. 649,453
6 Claims. (Cl. 260—296)

Pharmacologically active 1,3-di(4-pyridyl)-2-propanols having a 2–12 carbon aliphatic substituent on the 2-carbon are prepared by the reaction of a picolyl metal compound and an aliphatic acyl derivative.

3,398,157
PROCESS FOR PREPARING BENZIMIDAZOLE N-OXIDES
John M. Chemerda, Plainfield, George Gal, Summit, and Meyer Sletzinger, North Plainfield, N.J., assignors to Merck & Co., Inc., Rahway, N.J., a corporation of New Jersey
No Drawing. Continuation-in-part of application Ser. No. 422,489, Dec. 31, 1964. This application May 25, 1967, Ser. No. 641,120
4 Claims. (Cl. 260—302)

Benzimidazole-1-oxides substituted at the 2-position with a heteroaromatic radical having 1–3 hetero atoms wherein the hetero atoms are oxygen, nitrogen and/or sulfur, with optional substitution at the 5- and 6- positions. A process for the preparation of novel benzimidazole-1-oxides which are anthelmintic agents. Anthelmintic compositions containing a benzimidazole-1-oxide as the active ingredient.

3,398,158
1-PHENYL-4-ALKYLAMINO-PYRAZOLES
Raffaello Fusco, Milan, and Mario Bianchi, Carate, Brianza, Italy, assignors, by mesne assignments, to Warner-Lambert Pharmaceutical Company, Morris Plains, N.J., a corporation of Delaware
No Drawing. Filed Feb. 16, 1965, Ser. No. 433,175
Claims priority, application Italy, Feb. 19, 1964, 3,661/64
8 Claims. (Cl. 260—310)

There have been prepared new pyrazole derivatives represented by the following formula:

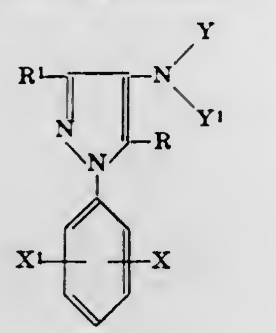

where R is hydrogen, methyl or hydroxymethyl, R^1 is hydrogen or methyl, X represents hydrogen, lower alkyl, hydroxy, lower alkoxy, halogen, amino, lower alkylamino, lower dialkylamino, acetylamino or nitro, X^1 is hydrogen or lower alkyl, Y is hydrogen, lower alkyl or the group CH_2SO_3M, where M is an alkali metal and Y^1 is lower alkyl or cycloalkyl.

The invention also includes within its scope non-toxic pharmaceutically acceptable acid addition salts of the compounds represented by the formula.

The compounds of the invention are useful as antipyretic, analgesic and antiinflammatory agents. They may be administered orally or enterally in admixture with a pharmaceutically acceptable carrier. They may be presented as tablets, capsules or suppositories in dosage unit form containing from about 5 mg. to about 500 mg. of the active ingredient.

3,398,159
AMINOPHENYL HETEROCYCLIC KETONES
Leo Berger, Montclair, Arthur Stempel, Teaneck, Leo Henryk Sternbach, Upper Montclair, and Edward Wenis, Leonia, N.J., assignors to Hoffmann-La Roche Inc., Nutley, N.J., a corporation of New Jersey
No Drawing. Original application June 20, 1961. Ser. No. 118,243. Divided and this application Nov. 27, 1963, Ser. No. 326,340
6 Claims. (Cl. 260—326.5)

1. A compound of the formula

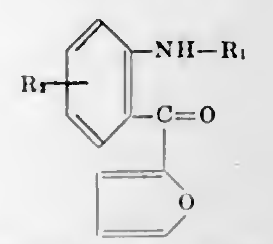

wherein R_1 is selected from the group consisting of hydrogen and lower alkyl; and R_2 is selected from the group consisting of hydrogen, halogen, lower alkoxy and nitro.

3. A compound of the formula

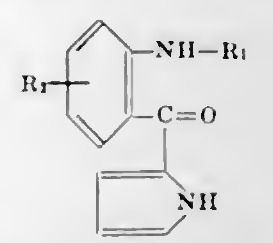

wherein R_1 is selected from the group consisting of hydrogen and lower alkyl; and R_2 is selected from the group consisting of hydrogen, halogen, lower alkoxy and nitro.

3,398,160
SATURATED THIAPYRAN-3-ONE-1,1-DIOXIDES AND THEIR PREPARATION
Jacques Martel, Bondy, and Chanh Huynh, Villemomble, France, assignors to Roussel-UCLAF, Paris, France, a corporation of France
No Drawing. Filed June 30, 1965, Ser. No. 468,625
Claims priority, application France, July 3, 1964, 980,627
15 Claims. (Cl. 260—327)

The invention has particularly for its object new cyclic sulfones, derivatives of tetrahydrothiapyran corresponding to the general Formula I:

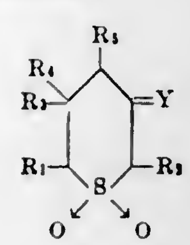

I

in which R_1 and R_2 represent hydrogen, a vinyl radical substituted or unsubstituted, particularly isobutenyl, or a phenyl radical substituted or unsubstituted; R_3 and R_4 represent hydrogen, an alkyl radical, an aralkyl radical or an aryl radical carrying one or several substituents, particularly lower alkyls, alkyloxyls or halogens, or forming together a ring containing from 3 to 7 carbon atoms, R_5 represents hydrogen or a lower alkyl radical, Y is equal to (1)

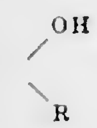

where R represents an alkyl radical, an aralkyl radical or an aryl radical, or is equal to (2) O and in this latter case the substituents R_1, R_2, R_3, R_4 and R_5 cannot simultaneously represent a hydrogen or, in the case of R_3, R_4 and R_5, lower alkyl. The products may be used as fungicides, insecticides, herbicides and, in the presence of dibutyl tin salts, as stabilizers for polyvinyl chloride. They are prepared by reacting an α,β unsaturated ketone with a disubstituted sulfone followed by cyclization of the resulting keto-sulfone.

3,398,161
(2 - HYDROXY - 3 - AMINOPROPOXY)BENZO(B) THIOPHEN DERIVATIVES WHICH HAVE β-ADRENERGIC BLOCKING ACTIVITY
Ralph William Turner, Macclesfield, England, assignor to Imperial Chemical Industries Limited, London, England, a corporation of Great Britain
No Drawing. Filed May 23, 1966, Ser. No. 551,876
Claims priority, application Great Britain, June 30, 1965, 27,723/65
4 Claims. (Cl. 260—330.5)

(2-hydroxy-3-aminopropoxy)benzo(b)thiophen derivatives, for example 4 - (2 - hydroxy - 3 - isopropylaminopropoxy)benzo(b)thiophen, which have β-adrenergic blocking activity. The compounds are made by interaction of the appropriate halohydrin or epoxide with an amine.

3,398,162
2,5 - (AND 2,6) - DIMETHYL - 2,3,5,6 - TETRAKIS (DIFLUORAMINO) - p - DIOXANES AND THEIR METHOD OF PREPARATION
James Grigor and James Brown Parker, Kilwinning, and Andrew Cochran Currie, Largs, Scotland, assignors, by mesne assignments, to the United States of America as represented by the Secretary of the Navy
No Drawing. Filed Sept. 26, 1963, Ser. No. 311,914
Claims priority, application Great Britain, Sept. 28, 1962, 36,974/62
11 Claims. (Cl. 260—340.6)

1. A process comprising refluxing a compound having the formula RCO—COR′, where R and R′ are selected from the group consisting of hydrogen and methyl with difluoramine in the presence of a member selected from the group consisting of chlorosulphonic acid and fluorosulphonic acid.

7. Tetrakis (difluoramino) derivatives of p-dioxane selected from the group consisting of; 2,3,5,6 tetrakis(difluoramino) p-dioxane; 2,5-dimethyl 2,3,5,6 tetrakis(difluoramino) p-dioxane, and 2,6-dimethyl 2,3,5,6, tetrakis (difluoramino) p-dioxane.

3,398,163
ETHYLENE OXIDE ADDUCTS OF AMINO ESTERS
Joseph A. Meyers III, Springfield, Pa., and Edward G. Shay, Belle Mead, N.J., assignors to Atlantic Richfield Company, a corporation of Pennsylvania
No Drawing. Filed Dec. 4, 1964, Ser. No. 416,143
6 Claims. (Cl. 260—404)

This invention relates to organic compounds which are useful as non-ionic detergents. More particularly, this invention relates to ethylene oxide adducts of amino esters, said adducts having the formula:

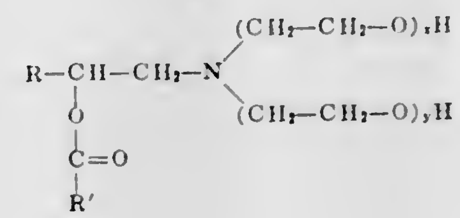

wherein R is a straight or branched chain alkyl radical having from 1 to about 18 carbon atoms, R′ is an unsubstituted hydrocarbon radical having from 1 to about 18 carbon atoms, and x and y are integers, the sum of x and y ranging from 2 to about 26.

3,398,164
POLYAMIDES OF 1,4-BIS(β-AMINOETHYL) BENZENE AND FRACTIONATED POLYMERIC FAT ACIDS
Edgar R. Rogier, Hopkins, Minn., assignor to General Mills, Inc., a corporation of Delaware
No Drawing. Filed July 2, 1963, Ser. No. 292,446
5 Claims. (Cl. 260—404.5)

1. A polyamide composition comprising the condensation product at temperatures of from 150–300° C. of 1,4-bis- β-aminoethyl)benzene and polymeric fat acids having a dimeric fat acids content greater than about 95% by weight, the molar equivalents of amine employed being essentially equal to the molar equivalents of carboxyl groups employed.

3,398,165
DIESTERS CONTAINING ADAMANTANE NUCLEI
Irl N. Duling, West Chester, and Abraham Schneider, Overbrook Hills, Pa., assignors to Sun Oil Company, Philadelphia, Pa., a corporation of New Jersey
No Drawing. Filed Mar. 2, 1966, Ser. No. 531,059
13 Claims. (Cl. 260—410)

1. A diester having 1–2 adamantane nuclei and corresponding to one of the following formulas:

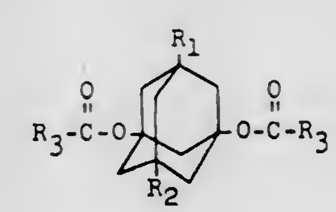

(I)

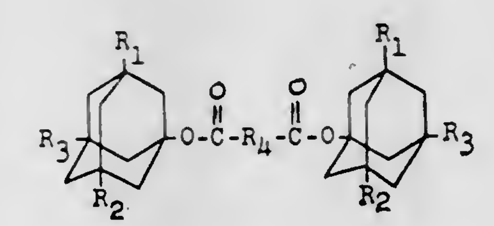

(II)

wherein R_1 is a radical having 0–20 carbon atoms selected from the group consisting of hydrogen, alkyl and cycloalkyl, R_2 and R_3 are alkyl or cycloalkyl radicals having 1–20 carbon atoms, and R_4 is an alkylene or cycloalkene radical having 1–20 carbon atoms.

3,398,166

DISMUTATION OF ALDEHYDES

Roy B. Duke, Jr., Smyrna, Ga., and Milton A. Perry, Longview, Tex., assignors to Eastman Kodak Company, Rochester, N.Y., a corporation of New Jersey

No Drawing. Filed Aug. 27, 1964, Ser. No. 392,634

7 Claims. (Cl. 260—413)

Aldehydes having a single hydrogen atom attached to the alpha-carbon atom and having the general formula R^1R^2 CHCHO, wherein R^1 and R^2 are alkyl of 2 to 8 carbon atoms, condense to the corresponding alcohol and monocarboxylic acid salt when contacted with an alkali metal hydroxide or alkali metal alkoxide at Cannizzaro reaction conditions. A valuable use of the disclosed process is in the manufacture of acid salts usable as driers for paints.

3,398,167

ACIDS AND SALTS IN WHICH THE ANION HAS A TRANSITION METAL ATTACHED TO ONE TO THREE —S(CF₃)C=C(CF₃)S— GROUPS

Walter Mahler, Wilmington, Del., assignor to E. I. du Pont de Nemours and Company, Wilmington, Del., a corporation of Delaware

No Drawing. Filed Oct. 25, 1963, Ser. No. 318,790

20 Claims. (Cl. 260—429)

This disclosure describes and claims acids and salts having a monovalent or divalent mono-, bis- or tris [1,2 - bis(trifluoromethyl)ethene - 1,2 - dithiolato]metal anion, e.g., disilver bis[1,2-bis(trifluoromethyl)ethene-1,2-dithiolato]nickelate and ammonium tris[1,2 - bis(trifluoromethyl)ethene-1,2-dithiolato]molybdate, and their preparation by the reduction of corresponding neutral [1,2 - bis(trifluoromethyl)ethene - 1,2 - dithiolato]metal compounds. The claimed products can be used in developing fingerprints.

3,398,168

PI-ALLYL PALLADIUM COMPLEX PRODUCTION

Dirk Medema, Amsterdam, Netherlands, assignor to Shell Oil Company, New York, N.Y., a corporation of Delaware

No Drawing. Filed Aug. 9, 1965, Ser. No. 478,412

Claims priority, application Netherlands, Mar. 17, 1965, 6503362

6 Claims. (Cl. 260—429)

An improved process of producing π-allyl palladium complexes comprises contacting a palladium (II) salt and an allylic compound with a hydrocarbon olefin in alcoholic solution.

3,398,169

PRODUCTION OF HALOGEN CONTAINING ORGANOTIN COMPOUNDS

Wilhelm Paul Neumann, Giessen (Lahn), and Josef Alfred Pedain, Hungen, Upper Hesse, Germany, assignors to Studiengesellschaft Kohle m.b.H., Mulheim (Ruhr), Germany

No Drawing. Filed July 8, 1965, Ser. No. 470,554

Claims priority, application Germany, July 10, 1964, St 22,385

9 Claims. (Cl. 260—429.7)

The production of halogen-containing organotin compounds by the reaction of organotin halide hydrides or mixed organotin halides and hydrides with an organic compound containing an unsaturated grouping, such as an olefinic double bond and acetylene triple bond, or a carbonyl double bond.

3,398,170

MIXED CHELATES OF A SCHIFF BASE, AN AMINE, AND A TRANSITION SERIES METAL

Henryk A. Cyba, Evanston, Ill., assignor to Universal Oil Products Company, Des Plaines, Ill., a corporation of Delaware

No Drawing. Filed May 21, 1964, Ser. No. 369,303

10 Claims. (Cl. 260—439)

A chelate of (1) a Schiff base of an o-hydroxy-aromatic aldehyde and an o-hydroxyaromatic amine, (2) an alkyl amine, cycloalkyl amine or alkanol amine and (3) a metal of the transition series such as nickel or cobalt. The chelates of this invention are useful as stabilizing additives for plastics, rubber, hydrocarbon distillates and other organic substrates.

3,398,171

PROCESS OF PRODUCING ORGANOHALOSILANES

Albert P. Giraitis, Paul Kobetz, and Francis M. Beaird, Jr., Baton Rouge, La., assignors to Ethyl Corporation, New York, N.Y., a corporation of Virginia

No Drawing. Filed Mar. 2, 1964, Ser. No. 348,824

41 Claims. (Cl. 260—448.2)

The selective preparation of particular organo-halosilicon compounds at low temperatures of about −10 to 50° C. in certain stoichiometric relationships of reactants is described. A new stepwise substitution of halogens by organo groups is obtained. The low temperatures are retained through recovery operations.

3,398,172

ORGANOSILOXANE-POLYETHER URETHANE EMULSIFIERS

Klaus Damm, Cologne-Flittard, and Horst Steinbach and Walter Noll, Leverkusen, Germany, assignors to Farbenfabriken Bayer Aktiengesellschaft, Leverkusen, Germany, a German corporation

No Drawing. Filed June 8, 1964, Ser. No. 373,558

8 Claims. (Cl. 260—448.2)

Emulsifiers are prepared by reacting polyether siloxanes with polyfunctional isocyanates and emulsions are prepared from said emulsifier, water and an organopolysiloxane.

3,398,173

PROCESS FOR PRODUCING SILOXANES

John C. Goossens, Scotia, N.Y., assignor to General Electric Company, a corporation of New York

No Drawing. Filed Oct. 1, 1964, Ser. No. 400,922

10 Claims. (Cl. 260—448.2)

A dichlorosilane reacts with a diorganosulfoxide in diluent solution to form a cyclotrisiloxane. Cyclotrisiloxanes are particularly useful in the formation of high molecular weight polymers suitable for use in the preparation of silicone rubber wire insulation.

3,398,174

METHOD OF SYNTHESIZING ORGANOSILICON COMPOUNDS

Garrett H. Barnes, Jr., Pittsburgh, Pa., assignor to Dow Corning Corporation, Midland, Mich., a corporation of Michigan

No Drawing. Filed Feb. 3, 1965, Ser. No. 430,194

2 Claims. (Cl. 260—448.2)

By employing buffer solutions, addition of SiH compounds to aliphatic unsaturated compounds in contact with chloroplatinic acid can be satisfactorily achieved in the presence of hydroxyl compounds such as water or alcohols.

3,398,175

SILPHENYLENE-CONTAINING BUILDING BLOCKS

Robert H. Leitheiser, Minneapolis, Minn., assignor to Dow Corning Corporation, Midland, Mich., a corporation of Michigan

No Drawing. Filed Feb. 8, 1965, Ser. No. 431,160

22 Claims. (Cl. 260—448.2)

Silphenylene compounds are disclosed which have the formulae

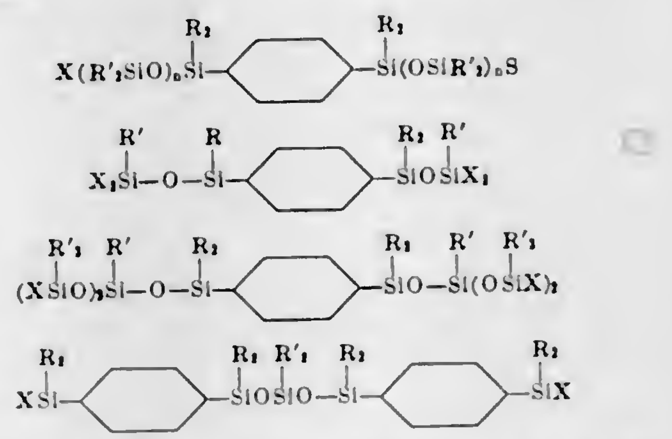

where each R and R′ is methyl or phenyl, X is halogen, hydrogen, hydroxyl or alkoxy and n is 1 to 3. Examples of these silphenylene compounds are Serial Number: 431,160

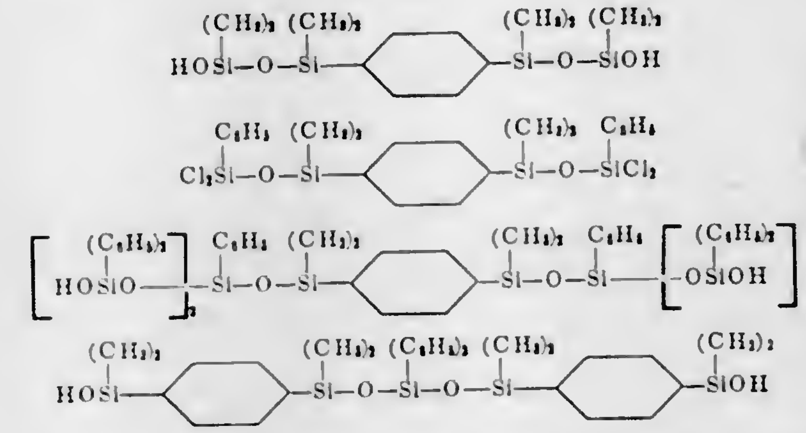

These silphenylene compounds are useful building blocks for thermally stable resins and elastomers.

3,398,176

STABILIZED LINEAR SILOXANE POLYMERS

Siegfried Nitzsche, Manfred Wick, and Karl-Heinrich W. Wegehaupt, Burghausen, Upper Bavaria, Germany, assignors to Wacker-Chemie G.m.b.H., Munich, Germany

No Drawing. Filed Apr. 28, 1965, Ser. No. 452,046

Claims priority, application Germany, May 6, 1964, W 36,735

9 Claims. (Cl. 260—448.2)

Essentially diorganosiloxane polymers are prepared by polymerizing hydroxyl endblocked low molecular weight diorganosiloxanes employing phosphoronitrile chlorides as catalytic agents and thereafter the catalyst is neutralized by adding 1 to 1½ mols of a tertiary amine per mol of phosphoronitrile chloride catalyst present.

3,398,177

REDISTRIBUTION OF SiH BONDS

Howard Franklin Stewart, Midland, Mich., assignor to Dow Corning Corporation, Midland, Mich., a corporation of Michigan

No Drawing. Filed May 10, 1965, Ser. No. 454,663

10 Claims. (Cl. 260—448.2)

1. The process of contacting at a temperature of 50° to 250° C.

(a) a silicone reactant comprising at least one organosilicon compound selected from the group consisting of silanes, polysilanes, and polysiloxanes, said silicone reactant containing

(1) ≡SiH bonds where the silicon atoms so bonded are further bonded to no more than one atom selected from the group consisting of halogen and oxygen atoms, and

(2) at least one type of bond selected from the group consisting of ≡SiCl, ≡SiR, and siloxane, where the silicon atoms participating in said bonds are each bonded to no more than two atoms selected from the group consisting of chlorine and oxygen atoms, where R is selected from the group consisting of aryl, alkaryl, and lower alkoxy, the other bonds in said silicone reactant consisting essentially of those selected from the group consisting of Si-monovalent aliphatic hydrocarbon, Si-monovalent cycloaliphatic hydrocarbon, Si-monovalent halo-hydrocarbon, Si-divalent hydrocarbon-Si, Si-divalent halohydrocarbon-Si, and Si-Si; with

(b) an aluminum silicate selected from the group consisting of acidic aluminum phyllosilicates, and acidic aluminum silicates of zeolite structure having a port size sufficiently large to permit entry of said silicone reactant into the zeolite framework, whereby an exchange reaction occurs between said bonds (1) and change reaction occurs between said bonds (1) and (2).

3,398,178

POLYMERIZATION OF SILACYCLOBUTANES

Lee E. Nelson, Midland, Mich., assignor to Dow Corning Corporation, Midland, Mich., a corporation of Michigan

No Drawing. Filed June 21, 1965, Ser. No. 465,725

4 Claims. (Cl. 260—448.2)

A method of polymerizing silacyclobutanes to form

units useful as fluids, resins, and elastomers. An illustrative example being:

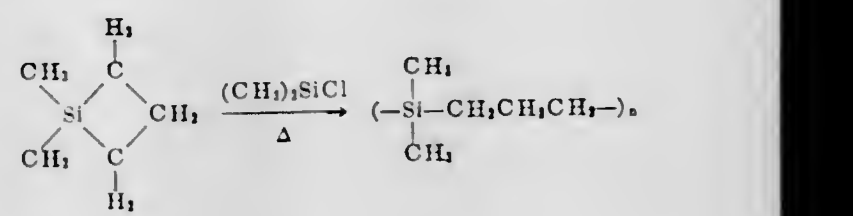

3,398,179

METHOD FOR THE PREPARATION OF DIPHENYLSILANEDIOL

Donald V. Flatt, Midland, Mich., assignor to Dow Corning Corporation, Midland, Mich., a corporation of Michigan

No Drawing. Filed Aug. 2, 1965, Ser. No. 476,659

14 Claims. (Cl. 260—448.2)

A method of preparing diphenylsilanediol by mixing

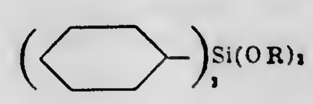

where R is an alkyl radical, water, organic solvent and acid, agitating mildly at a temperature of just above the freezing point of the solution to 40° C. and separating the diphenylsilanediol. The diphenylsilanediol is obtained in high yield and high purity. The diphenylsilanediol is useful in preparing polymers and copolymers and as an additive in silicone elastomers.

3,398,180
O-(2-PROPYNYL)-HYDROXAMIC ACIDS
Moses Wolf Goldberg, Upper Montclair, and Hanns Hanina Lehr, Montclair, N.J., and Marcel Muller, Reinach, Basel-Land, Switzerland, assignors to Hoffmann-La Roche Inc., Nutley, N.J., a corporation of New Jersey
No Drawing. Continuation-in-part of applications Ser. No. 831,941, Aug. 6, 1959, and Ser. No. 36,166, June 15, 1960. This application Aug. 21, 1963, Ser. No. 303,666
7 Claims. (Cl. 260—453)

O-(2-propynl)-hydroxamic acids which are utilized as flavoring agents for substances intended for oral injection and as intermediates for compounds having diuretic and/or naturetic properties.

3,398,181
DIMETHYLTHIOCARBAMOYL S-ALKYL-DITHIOCARBONATES
Kenneth S. Karsten, Westport, and William F. Russell, Norwalk, Conn., assignors to R. T. Vanderbilt Company, Inc., New York, N.Y., a corporation of New York
No Drawing. Filed May 7, 1965, Ser. No. 454,180
2 Claims. (Cl. 260—455)

Compounds having the structural formula

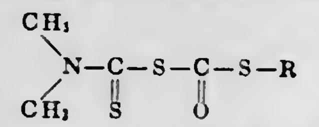

where R represents an alkyl group having from 1 to about 4 carbon atoms and the method of combatting unwanted biological life by applying such compounds to an area to be treated, such as eradicating unwanted fish, incorporating it into vinyl chloride resins, controlling insects and combatting fungi on agricultural crops, preserving cellulosic material from attack by organisms in the soil, and combatting paper mill slime.

3,398,182
FLUOROCARBON URETHANE COMPOUNDS
Richard A. Guenthner, White Bear Lake, and James D. Lazerte, St. Paul, Minn., assignors to Minnesota Mining & Manufacturing Company, St. Paul, Minn., a corporation of Delaware
No Drawing. Continuation-in-part of application Ser. No. 204,640, June 22, 1962. This application Jan. 26, 1967, Ser. No. 611,821
4 Claims. (Cl. 260—455)

Fluorocarbon compounds which contain a highly fluorinated oleophobic and hydrophobic terminal portion and a different nonfluorinated oleophilic portion linked together by a urethane radical obtained by reacting together an isocyanate and a highly fluorinated organic compound containing an active hydrogen. Surfaces coated with such fluorocarbon compounds are oleophobic and hydrophobic and the coating is durable, resisting removal by abrasion.

3,398,183
PRODUCTION OF AMINOALKANOL SULFURIC ACIDS
Hubert Kindler, Uwe Soenksen, and Arnold Wittwer, Ludwigshafen (Rhine), Germany, assignors to Badische Anilin- & Soda-Fabrik Aktiengesellschaft, Ludwigshafen (Rhine), Germany
No Drawing. Filed Aug. 19, 1965, Ser. No. 481,114
Claims priority, application Germany, Sept. 5, 1964, B 78,417
4 Claims. (Cl. 260—458)

Process for the production of aminoalkanol sulfuric acids by simultaneously introducing an aminoalkanol and sulfuric acid into a vigorously stirred inert suspension agent which is not miscible with water and is kept boiling at a temperature in the range of from 70° to 150° C. and distilling off the water formed in the reaction together with part of the suspension agent. Aminoalkanol sulfates have many uses. They are e.g. intermediates in the preparation of the corresponding ethylenimine derivatives.

3,398,184
POLYMERIZABLE ESTERS FROM UNSATURATED CARBOXYLIC ACID ANHYDRIDES AND CYCLIC ACETALS
Alexander Ramsay Maund Gibb, Barassie, Scotland, assignor to Imperial Chemical Industries Limited, London, England, a corporation of Great Britain
No Drawing. Filed July 20, 1964, Ser. No. 383,956
Claims priority, application Great Britain, July 23, 1963, 29,128/63
14 Claims. (Cl. 260—486)

New polymerizable unsaturated monomers of the formula

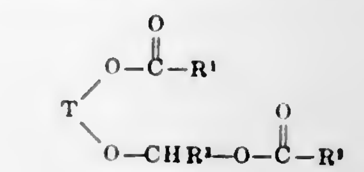

or

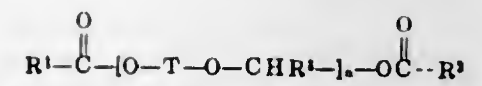

and a method of making the same. R^1 may be vinyl, α-methyl vinyl or propenyl and R^2 may be the same as R^1 or methyl. The monomers are made by reacting an unsaturated carboxylic anhydride with a cyclic acetal having the formula

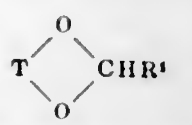

where R^3 is hydrogen or a vinyl radical and T is a divalent radical.

3,398,185
SEPARATION OF FORMALDEHYDE FROM HYDROGEN PEROXIDE BY EXTRACTIVE DISTILLATION AND SUBSEQUENT FORMATION OF PERACETIC ACID
Alexander F. MacLean and Charles C. Hobbs, Corpus Christi, Tex., assignors to Celanese Corporation, New York, N.Y., a corporation of Delaware
Filed Aug. 12, 1966, Ser. No. 571,975
9 Claims. (Cl. 260—502)

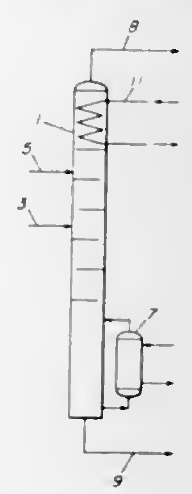

A gaseous mixture comprising formaldehyde, an olefin, and hydrogen peroxide, such as obtainable by vapor-phase hydrocarbon oxidation and therefore typically containing some of the unreacted hydrocarbon, is resolved into a vapor comprising the olefin and formaldehyde and a liquid comprising a solution of hydrogen peroxide by subjecting the gaseous mixture to an extractive distillation in a column into the upper portion of which there is injected a suitable extractant which as a solvent for hydrogen peroxide. Acetic acid is a particularly suitable extractant. The olefin, formaldehyde, and unrected hydrocarbon are withdrawn as gases from the head of the column, and the hydrogen peroxide dissolved in the extractant is withdrawn from the base. The invention comprises both a separation technique and a method for recovering hydrogen peroxide from hydrocarbon oxidation processes. When the extractant is acetic acid, the resulting solution of hydrogen peroxide can also be readily converted to peracetic acid.

3,398,186
PRODUCTION OF HUMIC ACID
Nelson N. Schwartz, Lawrence Township, Mercer County, N.J., assignor to FMC Corporation, New York, N.Y., a corporation of Delaware
No Drawing. Filed Dec. 23, 1963, Ser. No. 332,841
9 Claims. (Cl. 260—515)

1. Process of extracting humic acid values from a source thereof which comprises, using as the extracting solution an aqueous solution of a sulfite salt selected from the group consisting of sodium sulfite, potassium sulfite and ammonium sulfite, said solution having a pH of at least about 6, and separating the extracting solution containing humic acid values from the insoluble residues.

3,398,187
DERIVATIVES OF ACETIC ACID
David John Drain, Welwyn Garden City, England, assignor to T. J. Smith & Nephew Limited, Kingston-upon-Hull, England
No Drawing. Filed Aug. 30, 1965, Ser. No. 483,856
Claims priority, application Great Britain, Sept. 8, 1964, 36,691/64; Dec. 22, 1964, 51,971/64; Mar. 31, 1965, 13,538/65
6 Claims. (Cl. 260—519)

Aryloxyacetic acid and arylthioacetic acid derivatives having analgesic, anti-inflammatory and anti-pyretic properties and of low toxicity and having the general formula

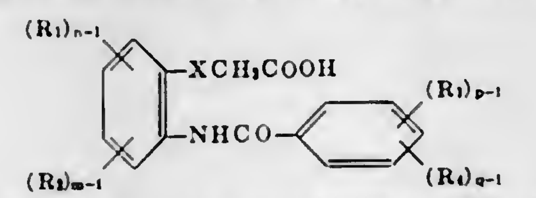

in which R_1, R_2, R_3 and R_4 are alkyl radicals having from 1 to 4 carbon atoms, alkoxyl radicals having from 1 to 4 carbon atoms, the hydroxyl radical, halogen atoms, the trifluoromethyl radical, the nitro radical, alkylsulphonyl radicals having from 1 to 4 carbon atoms, and the fused-on benzene ring; X is oxygen or sulphur; and *n*, *m*, *p* and *q* are 1 or 2. Representative compounds include 2-(3′,4′-dichlorobenzamido)-phenoxyacetic acid, 2-(3′,4′-dichlorobenzamido)-4-methylphenoxyacetic acid, and 2-benzamido-4-chlorophenoxyacetic acid. Compounds of this invention are prepared by alkaline hydrolysis of the corresponding dihydrobenzoxazinone or dihydrobenzthiazinone to produce a salt of phenoxyacetic acid or phenylthioacetic acid which is then reacted with a reactive derivative of an aromatic carboxylic acid.

3,398,188
[4-(2-HALOALKANOYL)PHENOXY]- AND [4-(2-HALOALKANOYL)PHENYLMERCAPTO]-ALKANOIC ACIDS
Everett M. Schultz, Ambler, Pa., assignor to Merck & Co., Inc., Rahway, N.J., a corporation of New Jersey
No Drawing. Continuation-in-part of application Ser. No. 155,961, Dec. 6, 1961. This application Mar. 4, 1964, Ser. No. 349,466
13 Claims. (Cl. 260—521)

(4-alkanoylphenoxy)alkanoic acids and (4-alkanoylphenylmercapto)alkanoic acids which are substituted in the 2-position of the alkanoyl chain by an halogen atom; and the salts, esters and amide derivatives of the said acids. The products are diuretic and saluretic agents which are useful in the treatment of conditions associated with edema.

3,398,189
PHOSPHORIMIDIC TRIAMIDE SALTS
Harold F. Wilson, Moorestown, N.J., and Robert L. Skiles, Warminster, Pa., assignors to Rohm & Haas Company, Philadelphia, Pa., a corporation of Delaware
No Drawing. Continuation of application Ser. No. 293,868, July 9, 1963. This application May 10, 1965, Ser. No. 454,694
10 Claims. (Cl. 260—551)

1. A compound, having pesticidal activity, of the

$$(RNH)_4P\cdot X$$

wherein each R is independently selected from the group consisting of alkyl groups of 1 to 18 carbon atoms, alkenyl groups of 3 to 12 carbon atoms and cycloalkyl groups of 5 to 6 carbon atoms and

X is a member of the group consisting of borate, bromide, chloride, fluoborate, iodide, nitrate, phosphate, sulfates, acetate, carbonates, oxalate, phthalate, carbamates, dithiocarbamates, sulfonates, thioxanthates, xanthates and polycarboxylate.

3,398,190
FLUORO-DICHLORO-METHANE-SULFENIC ACID-N-(TRIFLUORMETHYL)-N-ANILIDE
Paul-Ernst Frohberger, Burscheid, Bezirk, Dusseldorf, Erich Klauke, Cologne-Flittard, and Engelbert Kühle, Bergisch-Gladbach, Germany, assignors to Farbenfabriken Bayer Aktiengesellschaft, Leverkusen, Germany, a corporation of Germany
No Drawing. Filed Nov. 5, 1965, Ser. No. 506,610
Claims priority, application Germany, Nov. 17, 1964, F 44,460
1 Claim. (Cl. 260—551)

1. Fluoro-dichloromethane-sulfenic acid-N-(trifluoromethyl)-N-(2-methyl-5-nitro)-anilide having the formula

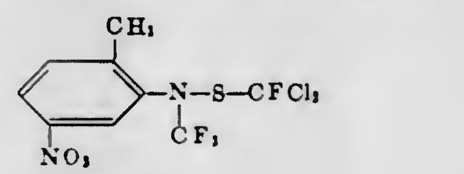

3,398,191
PROCESS FOR THE PRODUCTION OF GRANULAR NITROGENOUS COMPOUNDS
Joshua Beaumont Thompson and Gordon Charles Hildred, Trail, British Columbia, Canada, assignors to Cominco Ltd., a company of Canada
Continuation-in-part of application Ser. No. 189,551, Apr. 23, 1962. This application Dec. 9, 1963, Ser. No. 329,127
The portion of the term of the patent subsequent to Feb. 1, 1983, has been disclaimed
8 Claims. (Cl. 260—555)

1. The process of producing urea granules which comprises forming and maintaining in a rotatable, horizontally elongated contact zone a bed of moving solid particles of urea; adding finely divided solid particles of urea to said bed; advancing said particles through said contact zone; continuously raising solid particles from said bed to the upper region of said contact zone, releasing the raised solid particles to cascade downwardly through said contact zone as a continuous curtain of solid urea particles extending substantially the length of said contact zone, to said bed; spraying, at a temperature within the range of from about 5 to about 25 centigrade degrees above its crystallization temperature, molten, substantially anhydrous urea onto said bed and into the curtain of solid par-

ticles cascading downwardly through said contact zone onto said bed; and continuously passing a current of cooling air through said contact zone counter-current to the direction of advance of said particles.

3,398,192
PENTACHLOROPHENYL-TRICHLOROMETHYL IMIDE CHLORIDE
Horst Tarnow, Leverkusen, Hans Holtschmidt, Cologne-Stammheim, and Günter Unterstenhöfer, Opladen, Germany, assignors to Farbenfabriken Bayer Aktiengesellschaft, Leverkusen, Germany, a German corporation
No Drawing. Filed Oct. 27, 1964, Ser. No. 406,913
Claims priority, application Germany, Nov. 27, 1963, F 41,383
1 Claim. (Cl. 260—566)

1. Pentachlorophenyl-trichlormethyl imide chloride.

3,398,193
4-DIALKYLAMINO-4'-SECONDARY ALKYL AMINO-DIPHENYLAMINES
Edward L. Wheeler, Woodbury, Conn., assignor to Uniroyal, Inc., a corporation of New Jersey
No Drawing. Filed Sept. 25, 1963, Ser. No. 311,324
The portion of the term of the patent subsequent to Aug. 9, 1983, has been disclaimed and dedicated to the Public
1 Claim. (Cl. 260—576)

4-disubstituted amino-4'-monosubstituted amino diphenyl amines are useful as antioxidants when used in combination with vulcanized rubber.

3,398,194
PROCESS FOR MANUFACTURE OF 2,4-DINITROBENZENE DERIVATIVES
Semen Semenovich Gitis, Tulskoi oblasti, ulitsa Parkovaya 30/29, kv. 22, and Arkady Vasilievich Ivanov, Tulskoi oblasti, ulitsa Chapaeva 12-a, kv. 18, both of Novomoskovsk, U.S.S.R.
No Drawing. Filed June 8, 1965, Ser. No. 463,471
11 Claims. (Cl. 260—577)

A process for producing 2,4-dinitrophenol and a 2,4-dinitrobenzene derivative substituted in the 1-position by a member of the group consisting of $—NH_2$, —OR —NHR and $—N(R)_2$, wherein R is a lower alkyl group. The process comprises reacting 2,2',4,4'-tetranitrodiphenyl ether in an organic solvent with a compound selected from the group consisting of NH_3, a lower alkali alkoxide, a lower alkyl amine and a lower dialkylamine at a temperature of at least room temperature, after which the dinitrobenzene derivative is separated from the solution and the 2,4-dinitrophenol is recovered from the mother liquor.

3,398,195
PROCESS FOR PRODUCING HEXAMETHYLENEDIAMINE
Richard Anthony Williams, Manchester, England, assignor to Imperial Chemical Industries Limited, London, England, a corporation of Great Britain
Filed Jan. 10, 1966, Ser. No. 519,576
Claims priority, application Great Britain, Jan. 11, 1965, 1,201/65
2 Claims. (Cl. 260—583)

1. In a continuous process for the manufacture of hexamethylenediamine by passage of liquid adiponitrile, ammonia and hydrogen through a hydrogenation zone wherein the temperature is from 85° to 150° C. and the pressure is from 20 to 500 atmospheres to effect hydrogenation in liquid phase the improvement which comprises passing the mixture issuing from the said hydrogenation zone into a separation zone at the same temperature and pressure as the hydrogenation zone, allowing separation of the mixture into a gas phase comprising hydrogen and ammonia and a liquid phase comprising hexamethylenediamine and recirculating the hydrogen and ammonia to the hydrogenation zone.

3,398,196
N-SECONDARY-ALKYL TRIMETHYLENE DIAMINES
Eugene J. Miller, Jr., Wheaton, and Ago Mais, La Grange Park, Ill., assignors, by mesne assignments, to Armour Industrial Chemical Company, a corporation of Delaware
No Drawing. Filed Dec. 31, 1964, Ser. No. 422,504
5 Claims. (Cl. 260—583)

N-secondary-alkyl diamines having a branched chain group on a secondary nitrogen which are useful as bactericides, fungicides, corrosion inhibitors, and other uses utilizing cationic surface-active properties.

3,398,197
N-SECONDARY-ALKYL TERTIARY AMINE COMPOUNDS
Eugene J. Miller, Jr., Wheaton, and Ago Mais, La Grange Park, Ill., assignors, by mesne assignments, to Armour Industrial Chemical Company, a corporation of Delaware
No Drawing. Filed Feb. 23, 1965, Ser. No. 434,607
12 Claims. (Cl. 260—584)

Alkylated and alkoxylated tertiary amine compounds wherein one tertiary nitrogen atom has a secondary-alkyl group attached to it, useful as fuel additives, bactericides.

3,398,198
LESS THAN FULLY PROPYLATED (BETA HYDROXY PROPYL) ETHYLENE DIAMINE AND METHOD OF PREPARATION THEREOF
Paul W. Kersnar and Samuel Taormina, San Francisco, Calif., assignors to Progressive Products Co., San Francisco, Calif., a corporation of California
No Drawing. Original application July 30, 1965, Ser. No. 476,193. Divided and this application May 22, 1967, Ser. No. 640,389
5 Claims. (Cl. 260—584)

The reaction product of between 1 mol of ethylene diamine and 2.0 to 3.5 mols of propylene oxide, consisting essentially of a mixture of mono, bis, tris and tetra (beta hydroxy propyl) ethylene diamine, is formed under nonforcing conditions by gradually mixing the propylene oxide into an aqueous solution of the ethylene diamine.

3,398,199
PROCESS AND CATALYST FOR THE OXIDATION OF OLEFINS
Robert A. Walde, Emmaus, Pa., assignor to Air Products and Chemicals, Inc., Philadelphia, Pa., a corporation of Delaware
No Drawing. Filed Feb. 28, 1964, Ser. No. 348,268
5 Claims. (Cl. 260—604)

Catalytic oxidation of olefins, particularly of propylene or isobutylene, is effected at 200 to 500° C. over silica-supported copper boride.

3,398,200
PREPARATION OF THIOL-ALLENE ADDUCTS
Karl Griesbaum, Elizabeth, and Alexis A. Oswald, Mountainside, N.J., assignors to Esso Research and Engineering Company, a corporation of Delaware
No Drawing. Filed May 18, 1964, Ser. No. 368,345
2 Claims. (Cl. 260—609)

Thiol adducts of allene, such as, for example, allyl p-chlorophenyl sulfide and 1,3-bis-p-chlorophenylmercapto-propane, their methods of preparation, and their use in pesticidal compositions which are especially useful nematocides. Such adducts are prepared by reacting a compound having the structural formula RSH with allene in the presence of a suitable catalyst such as ultraviolet light, gamma radiation, and a wide variety of peroxidic and azo compounds.

3,398,201
REACTION PRODUCTS FROM 2-ALKOXYBUTANOLS AND 3,5,x - POLYALKOXYALKANOLS WITH ALKYLENE OXIDES
Samuel A. Glickman, Easton, Pa., assignor to GAF Corporation, a corporation of Delaware
No Drawing. Filed May 7, 1965, Ser. No. 454,205
4 Claims. (Cl. 260—615)

1. Compounds of the formula

$$R'-\underset{\substack{|\\ O\\ R}}{CH}-[CH_2-\underset{\substack{|\\ O\\ R}}{CH}]_n-CH_2-CH_2[-O-R''-]_mOH$$

wherein R and R' each independently represent a lower alkyl radical, R'' represents the residue of a vicinal epoxide and has the formula

$$-\underset{\substack{|\\ R^2}}{HC}-\underset{\substack{|\\ R^3}}{CH}-$$

wherein R^2 and R^3 each independently represent a member of the group consisting of hydrogen, lower alkyl, phenyl and R^2 and R^3 taken together may represent an alkylene group forming with the carbons of the epoxy residue a cycloalkyl moiety which contains from 1 to 10 carbon atoms; *n* represents an integer of zero to 30 and *m* represents an integer of 1 to 100.

3,398,202
PROCESS FOR TREATING A MIXTURE OF SYMMETRIC AND ASYMMETRIC DICHLOROTETRAFLUOROETHANES
Louis Foulletier, Lyon, France, assignor to Ugine Kuhlmann, Paris, France, a corporation of France
No Drawing. Filed Aug. 8, 1966, Ser. No. 570,686
Claims priority, application France, Aug. 13, 1965, 28,291
5 Claims. (Cl. 260—653)

A process for increasing the proportion of symmetric dichlorotetrafluorethane by passing a mixture of symmetric and asymmetric dichlorotetrafluorethane over a catalyst maintained between 50 and 500° C.

3,398,203
PROCESS FOR THE PREPARATION OF FLUORINATED HYDROCARBONS
Danford H. Olson, Woodriver, Ill., assignor to Marathon Oil Company, Findlay, Ohio, a corporation of Ohio
No Drawing. Filed Aug. 1, 1966, Ser. No. 569,022
7 Claims. (Cl. 260—653.3)

The present invention comprises a process for the fluorination of lower molecular weight acyclic aliphatic hydrocarbons free from acetylenic bonds comprising in combination the steps of contacting said hydrocarbons with hydrogen fluoride and oxygen in the presence of an effective amount of copper fluoride dissolved in an eutectic mixture having a melting point above about 300° C. and less than 500° C. and a vaporization point under the reaction conditions greater than 600° C., said eutectic mixture comprising at least two inorganic metal fluorides, in a reaction zone having a temperature above the melting point of said eutectic mixture and below 600° C., and wherein the inorganic metal fluorides are selected from the group consisting of alkali metal fluorides and alkaline earth metal fluorides.

3,398,204
ISOMERIZATION PROCESS
Robert W. Gallant, Plaquemine, La., assignor to The Dow Chemical Company, Midland, Mich., a corporation of Delaware
No Drawing. Filed Aug. 26, 1965, Ser. No. 482,890
9 Claims. (Cl. 260—654)

Isomerization of a cis-trihaloalkene to a trans-trihaloalkene by contacting the former in the vapor phase with a metal halide Friedel-Crafts catalyst at a temperature of at least 100° C.

3,398,205
OLEFIN ISOMERIZATION PROCESS
Sterling F. Chappell, Lake Charles, and Reginald F. Clark, Baton Rouge, La., assignors to Columbian Carbon Company, New York, N.Y., a corporation of Delaware
No Drawing. Filed Sept. 20, 1965, Ser. No. 488,798
7 Claims. (Cl. 260—666)

A process for the isomerization of an ethylenically unsaturated aliphatic hydrocarbon to a more thermodynamically stable isomeric form which is catalyzed by a heavy metal carbonyl. Carbon monoxide is maintained at a partial pressure low enough to permit the decomposing of the heavy metal carbonyl catalyst, yet high enough to prevent the catalyst from decomposing at an uncontrolled rate.

3,398,206
PRODUCTION OF p-DIALKYLBENZENES
Max Strohmeyer, Ludwigshafen (Rhine), Karl Hiller, Heidelberg, and Heinrich Scholz and Hubert Kindler, Ludwigshafen (Rhine), Germany, assignors to Badische Anilin- & Soda-Fabrik Aktiengesellschaft, Ludwigshafen (Rhine), Germany
No Drawing. Filed Aug. 18, 1966, Ser. No. 573,190
Claims priority, application Germany, Aug. 20, 1965, B 83,356
5 Claims. (Cl. 260—671)

The preparation of p-dialkylbenzenes by alkylation of an alkylbenzene with an olefin using a catalyst comprised of (1) aluminum chloride, (2) hydrogen chloride, and (3) an aromatic hydrocarbon which contains a carbon-carbon double bond in conjugation to a benzene nucleus.

3,398,207
SELECTIVE ISOPROPYLATION OF PSEUDOCUMENE
Walter A. Butte, Jr., West Chester, Pa., assignor to Sun Oil Company, Philadelphia, Pa., a corporation of New Jersey
No Drawing. Filed Dec. 1, 1966, Ser. No. 598,154
2 Claims. (Cl. 260—671)

1-isopropyl-2,4,5-trimethylbenzene is produced by reacting pseudocumene with propylene in the presence of $AlCl_3—CH_3NO_2—(CH_3)_2CHX$, wherein X is chlorine or bromine.

3,398,208
MOLECULAR SIEVE DRYING PROCESS
Dennis J. Ward, Lombard, Ill., assignor to Universal Oil Products Company, Des Plaines, Ill., a corporation of Delaware
Filed Mar. 29, 1965, Ser. No. 443,353
5 Claims. (Cl. 260—674)

In the drying of a wet fluid feed, such as a benzene hydrocarbon, by contact with molecular sieves wherein the molecular sieve bed is periodically regenerated with an inert stripping gas at elevated temperature and/or reduced pressure, said feed having a molecular size such that it cannot pass through the pore entrances of the molecular sieve, the method of increasing the drying rate by treating the sieves, after the regeneration step, with a fluid drying aid comprising a material having a suffi-

ciently small molecular size to pass through the pore entrances and which is soluble in the feed and is less strong-

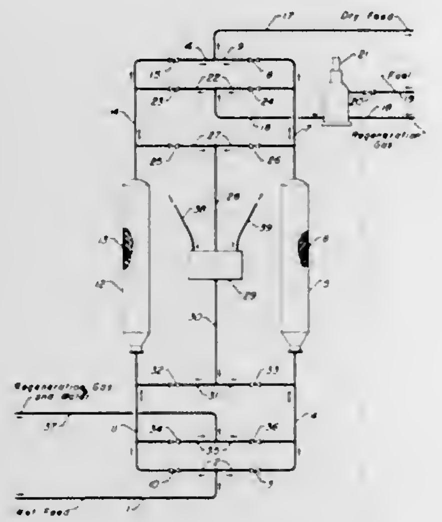

ly sorbed by the sieves than water. The drying aid preferably comprises a C_3–C_6 normal paraffin.

3,398,209
PREPARATION OF TRANS-1,4-DIENES
Wolfgang Schneider, Broadview Heights, Ohio, assignor to The B. F. Goodrich Company, New York, N.Y., a corporation of New York
No Drawing. Filed July 6, 1965, Ser. No. 469,849
9 Claims. (Cl. 260—680)

Trans-1,4-dienes which are useful third monomers for polymerization with ethylene and propylene to form vulcanizable rubbers are obtained by the reaction of a 1,3-diene containing 4 to 6 carbon atoms with ethylene. The reaction is conducted in the presence of a reduced palladium catalyst.

3,398,210
COMPOSITIONS COMPRISING ACRYLOXYALKYLSILANES AND UNSATURATED POLYESTER RESINS
Edwin P. Plueddemann and Harold A. Clark, Midland, Mich., assignors to Dow Corning Corporation, Midland, Mich., a corporation of Michigan
No Drawing. Continuation-in-part of applications Ser. No. 87,101, Feb. 6, 1961, and Ser. No. 111,146, May 19, 1961. This application June 17, 1963, Ser. No. 288,525
1 Claim. (Cl. 260—827)

Composite articles of improved strength are obtained either (1) by treating a base member or filler with an acryloxyalkylsilane or hydrolysis product thereof, curing the silane and thereafter applying a resin to the treated member, or (2) adding the silane to the resin and then applying the curable mixture to the base member or filler. As an example, laminates of glass fibers and polyester resins are prepared having improved bonding between the glass and the resin by employing these acryloxyalkylsilanes.

3,398,211
DIGLYCIDYL ETHERS OF POLYHYDRIC ALCOHOLS WITH DIAMINES OR HYDROQUINONES AND 1,4-CYCLOHEXADIENE DIOXIDE
Thomas Ramos, 536 Fort Washington Ave., New York, N.Y. 10033
No Drawing. Continuation-in-part of application Ser. No. 512,269, Dec. 6, 1965. This application Mar. 8, 1966, Ser. No. 534,970
9 Claims. (Cl. 260—830)

Synthetic resins derived from a diglycidyl ether of a polyhydric alcohol, a phenol and a diepoxy cycloaliphatic diene. These resins are useful for embedding, encapsulating, casting, filament winding, reinforced plastics and syntactic foam applications.

One such resin is derived from 1,4-butanediol diglycidyl ether, mono-tertiary butylhydroquinone and 1,4-cyclohexadiene dioxide.

3,398,212
BISPHENOL POLYCARBONATES AND POLYESTERS CONTAINING UNITS DERIVED FROM A THIODIPHENOL
Winston Jerome Jackson, Jr., and John Richard Caldwell, Kingsport, Tenn., assignors to Eastman Kodak Company, Rochester, N.Y., a corporation of New Jersey
Continuation-in-part of application Ser. No. 292,139, July 1, 1963. This application May 2, 1967, Ser. No. 635,519
12 Claims. (Cl. 260—860)

Bisphenol polycarbonates and polyesters useful as molded objects, fibers, films, etc., are prepared from a polycyclic bisphenol [such as 4,4'-(2-norbornylidene)diphenol] and a thiodiphenol [such as 4,4'-thiodiphenol]. The thiodiphenol unit imparts improved oxidative stability to these polymers without substantially lowering the tensile or thermal properties.

3,398,213
POLYMERIZATION OF COBALT CONTAINING UNSATURATED POLYESTER RESINS
Edward Chetakian, Anaheim, Calif., assignor to The Norac Company, Inc., Azusa, Calif., a corporation of California
No Drawing. Continuation-in-part of application Ser. No. 50,308, Aug. 18, 1960. This application Apr. 12, 1965, Ser. No. 447,547
3 Claims. (Cl. 260—863)

The cure rate of unsaturated polyester resins is improved by adding chelating agents selected from the group consisting of ethylene diamine tetraacetic acid and diethylene triamine pentaacetic acid. The resins contain soluble cobalt salts as the promoter and methyl ethyl ketone peroxide as catalyst.

3,398,214
PROCESS FOR PRODUCTION OF POLYMERS OF MONOVINYLAROMATIC COMPOUNDS AND POLYBUTADIENE
Alec N. Roper and Henry G. Scott, Cheshire, England, assignors to Shell Oil Company, New York, N.Y., a corporation of Delaware
No Drawing. Filed Sept. 3, 1965, Ser. No. 485,104
Claims priority, application Great Britain, Sept. 7, 1964, 36,577/64
8 Claims. (Cl. 260—876)

A process for the preparation of interpolymers having good surface gloss and high impact strength which comprises: (a) polymerizing a monovinylaromatic compound such as styrene to a conversion not greater than 45% by heating said compound at a temperature between 70° and 140° C., (b) blending the solution of partially polymerized monovinylaromatic compound with a prepolymer to yield a blend containing between 40 and 60% by weight of the prepolymer, and (c) completing polymerization by heating the blend at a temperature between 100° and 220° C., said prepolymer being obtained by polymerizing to a conversion not greater than 10% an agitated mixture of a monovinylaromatic compound and a polybutadiene rubber held at a temperature between 70° and 140° C.

3,398,215
METHOD FOR MAKING ROCKET PROPELLANT
Lawrence Spenadel, Fanwood, Homer J. Hall, Cranford, and Isidor Kirshenbaum, Westfield, N.J., assignors to Esso Research and Engineering Company, a corporation of Delaware
No Drawing. Continuation-in-part of application Ser. No. 822,713, June 22, 1959. This application Apr. 19, 1961, Ser. No. 104,770
7 Claims. (Cl. 264—3)

1. Method for making a rocket propellant which comprises, mixing a curable rubbery polymer selected from the group consisting of hydrocarbon rubber and halogenated hydrocarbon rubber, a curing agent, a powdered metal fuel of the group consisting of aluminum, boron, titanium, beryllium, magnesium and lithium, and an organic liquid blowing agent which boils in the range of 70° to 200° C., is compatible with the polymer and is volatilized at the curing temperature in the range of 120° to 205° C. of the rubbery polymer in the resulting composite, said organic liquid blowing agent being selected from the group consisting of hydrocarbons, halogenated hydrocarbons, and ketones, curing the polymer in the resulting composite at its curing temperature at which said organic liquid blowing agent is volatilized, forms pores and forms open cells in the resulting sponge matrix of the cured polymer containing the fuel, then cooling the sponge containing vapors of the blowing agent, immersing the cooled sponge in a liquid oxidizing agent which gives a high-energy reaction on combustion with the powdered metal fuel, the thus filled sponge being maintained free of permanent gas and containing about 75 to 95 wt. percent of the powdered metal fuel and of the liquid oxidizing agent.

3,398,216
METHOD OF AND APPARATUS FOR FABRICATING CRYSTALLINE DIELECTRICS HAVING IMPROVED SHEAR STRENGTH
Edward J. Petry, 29 La Clede Ave., Trenton, N.J. 08618
Filed Mar. 2, 1965, Ser. No. 436,461
5 Claims. (Cl. 264—24)

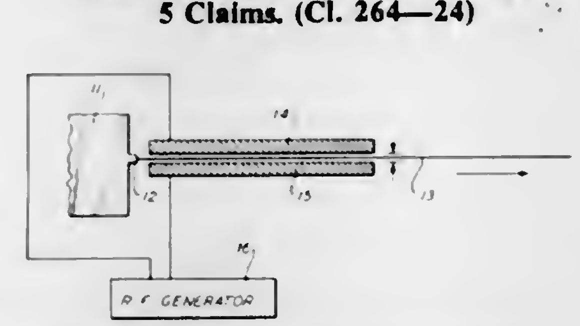

Disclosed are a system and method for fabricating crystalline dielectrics having improved shear strength. A dielectric in molten form is extruded from a die and passed between a pair of plates excited by a low duty cycle R.F. source. A cooling gas is fed to the dielectric while it is between the plates, whereby the dielectric is in a solid condition as it emerges from the plates.

3,398,217
METHOD FOR MANUFACTURING A PROGRAM MEMBER FOR A READING HEAD
Reed A. Palmer, Los Alamitos, Calif., assignor to Robertshaw Controls Company, a corporation of Delaware
Continuation of application Ser. No. 153,046, Nov. 17, 1961. This application Feb. 12, 1965, Ser. No. 439,121
5 Claims. (Cl. 264—45)

1. The method of manufacturing a program member for a reading head, said program member having a relatively rigid backing member and a resilient foam produced by a porous foamed material with the foam adhering to said rigid member and with a sealing program surface made of a fluid tight skin produced by said foamed material, said skin having program controlling fluid transmitting irregularities, which method comprises providing a mold member with a mold surface shaped to produce said irregularities, and said surface being repellent to adhesion of said foamed material, placing said rigid backing member adjacent said mold, and introducing foam pro-

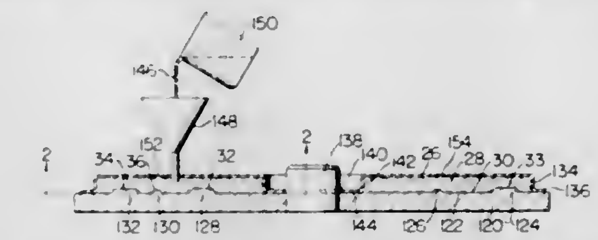

ducing material between said backing member and said mold surface, said material producing a foam which adheres to said backing member and which jells to produce a resilient foam and to produce a skin having said program controlling fluid transmitting irregularities.

3,398,218
METHOD AND APPARATUS FOR MANUFACTURING TRANSMISSION BELTS
Kenneth D. Richmond, Nixa, Mo., assignor to Dayco Corporation, Dayton, Ohio, a corporation of Ohio
Filed Apr. 22, 1965, Ser. No. 450,142
14 Claims. (Cl. 264—45)

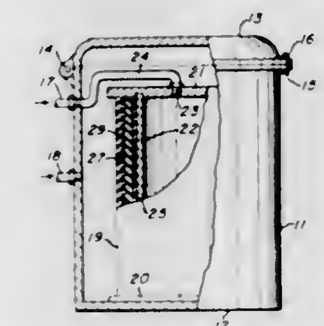

A method of making transmission belts by assembling a belt sleeve or individual belt bodies in the conventional manner and placing them within a vulcanizing chamber. The sleeve or body is placed around an uncured annular rubber member or series of strips which have blowing agents incorporated therein and wrapped around a steel inner mold member. Inward pressure is applied to the body or sleeve while at the same time the application of heat causes the blowing agent to expand and also apply outward pressure to the sleeve or body.

3,398,219
METHOD FOR MAKING MULTI-COLORED SOAP BARS
William A. Kelly, Haworth, N.J., and Philip J. Petix, Los Angeles, Calif., assignors to Lever Brothers Company, New York, N.Y., a corporation of Maine
Original application Nov. 27, 1964, Ser. No. 414,357, now Patent No. 3,268,970, dated Aug. 30, 1966. Divided and this application Aug. 3, 1966, Ser. No. 570,391
6 Claims. (Cl. 264—102)

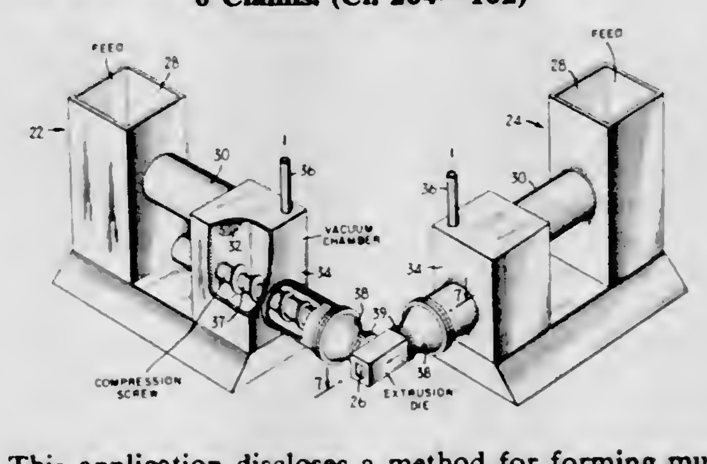

This application discloses a method for forming multi-colored soap bars. The method provides for extruding

such bars using vacuum plodders having high pressure extrusion screws to form the component sections. The component sections are brought together without permitting air to contact their freshly extruded surfaces. Apparatus suitable for carrying out the method is also described.

3,398,220
PROCESS FOR CONVERTING A WEB OF SYNTHETIC MATERIAL INTO BULK YARNS
Morton I. Port, West End, N.J., and Bernard L. Schwartz, Scarsdale, N.Y., assignors to Parker, Pace Corporation, a corporation of New York
Filed June 26, 1964, Ser. No. 378,179
8 Claims. (Cl. 264—147)

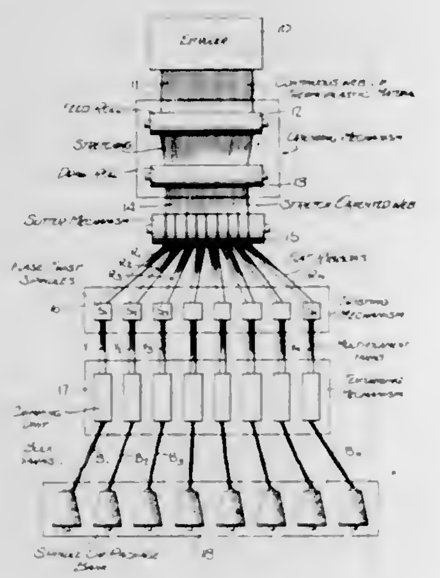

A process for converting synthetic polymeric material into a plurality of bulk yarn packages in which the material is first extruded into a film-like broad web which is then stretched to an orientation point at which filamentization is possible, the oriented web being thereafter slit into a plurality of individual monofilament ribbons which are then stressed to cause the ribbons to form into multifilament yarns, each yarn then being texturized to form a bulked yarn which is wound into a package.

3,398,221
METHOD OF PRODUCING SHOE INSERTS
Lawrence Sherman, 1297 Van Houten Ave., Clifton, N.J. 07013, and Garry Sherman, 165 West End Ave., New York, N.Y. 10023
Filed June 9, 1965, Ser. No. 462,649
13 Claims. (Cl. 264—223)

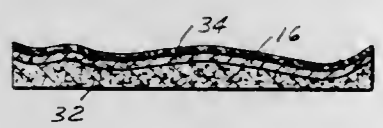

There is disclosed a method of producing a foot-conforming shoe insert according to which an impression of the bottom of the foot is first formed by pressing the foot into a softened sheet of wax placed on a resilient support. The sheet of wax thus constitutes a negative mold which is used to form a positive mold by applying to the wax sheet a suitable hardening layer such as a resin-containing fabric layer. After separating the wax from the positive mold, a coating of a pasty composition is then applied to the positive mold and this composition after hardening constitutes the desired foot-conforming and foot-supporting insert.

3,398,222
METHOD OF MAKING A PLASTIC AND RUBBER WHEEL
Bruce F. Kaufman, Jr., Tallmadge, and Raymond R. Mong, Northfield Center, Ohio, assignors to Industrial Electronic Rubber Company, Twinsburg, Ohio, a corporation of Ohio
Filed Sept. 30, 1965, Ser. No. 491,609
5 Claims. (Cl. 264—250)

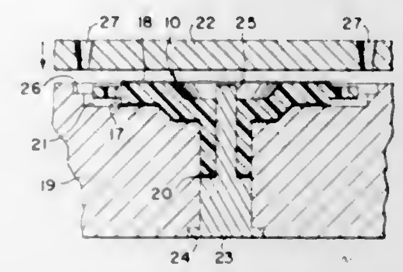

The method of making a wheel by molding a continuous rubber body to a rigid plastic body having a right cylindrical portion, the plastic body being formed with continuous annular beads respectively adjacent to the edges of said cylindrical portion and projecting beyond the facers of the same, with the beads being substantially completely crushed by closure of the mold about the plastic body and providing an interior seal for the annular cavity defined by the mold and the cylindrical plastic portion.

3,398,223
PROCESS FOR PRODUCTION OF CRIMPED FILAMENTS
Günther Schatz and Hermann Gemeinhardt, Elsenfeld, and Hans Brücher and Otto Jurisch, Klingenberg, Germany, assignors to Glanzstoff A.G., Wuppertal-Elberfeld, Germany
Original application June 22, 1964, Ser. No. 378,488, now Patent No. 3,345,719, dated Oct. 10, 1967. Divided and this application Aug. 16, 1967, Ser. No. 661,073
Claims priority, application Germany, June 24, 1963, V 24,218
4 Claims. (Cl. 264—282)

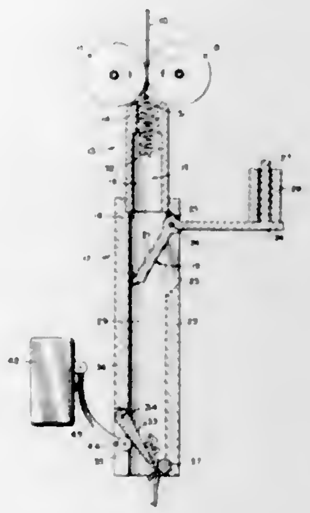

Processes for crimping filaments by forcing a heated filament into a crimping zone defined by an axial passage having an upper, short compression throat and lower compression chamber having a cross-sectional area which is about 1.2 to 2 times the cross-sectional area of said throat, and having a length about 2.5 to 7 times the length of said throat, tightly crimping said heated filament in said throat as the crimped filament is forced through said zone, periodically discharging crimped filament from said compression chamber into a buffer space, and periodically drawing crimped filament from said buffer space.

3,398,224
METHOD OF AND APPARATUS FOR PROVIDING A POLYURETHANE FOAM WITH A DENSE SURFACE LAYER
Francis T. Spencer, Biddeford, Maine, assignor to Pepperell Manufacturing Company, Boston, Mass., a corporation of Massachusetts
Filed July 7, 1965, Ser. No. 470,053
12 Claims. (Cl. 264—321)

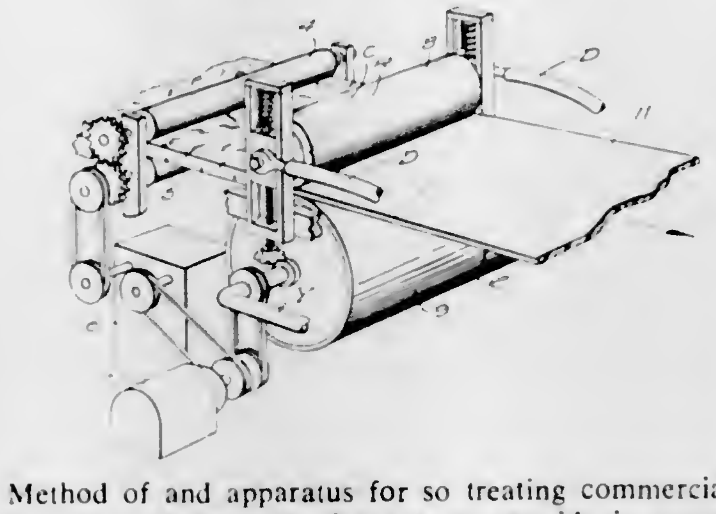

Method of and apparatus for so treating commercial, fully cured polyurethane foam as to provide it on one face with a dense, integral surface layer or skin which is free from transverse wrinkles at its selvages and from longitudinal corrugations.

3,398,225
COATED 2,2-DICHLOROVINYL PHOSPHATE AND POLYVINYL CHLORIDE RESIN ANTHELMINTIC COMPOSITIONS
Richard H. Bellin, Berkeley Heights, N.J., assignor to Shell Oil Company, New York, N.Y., a corporation of Delaware
No Drawing. Filed Nov. 2, 1964, Ser. No. 408,415
7 Claims. (Cl. 424—34)

Anthelmintic compositions comprising a core of 2,2-dichlorovinyl phosphate combined with a polyvinyl chloride resin which is surrounded by a pellicular coating of a polyhydric alcohol and a natural gum which in turn is overcoated with an edible moisture-resistant material.

3,398,226
COMPLEX OF THIAMINE AND A STYRENE-MALEIC ANHYDRIDE COPOLYMER
Ryuichi Yamamoto, 8-chome, Danjyo-cho, Nishinomiyashi, Hyogo, Japan, and Kazuhiro Shima, 473 Toboshi, Ibaragi-shi, Osaka, Japan
Continuation-in-part of application Ser. No. 421,394, Dec. 28, 1964. This application Nov. 10, 1966, Ser. 615,869
Claims priority, application Japan, Dec. 28, 1963, 38/71,222
8 Claims. (Cl. 424—78)

A complex of a thiamine and a styrene-maleic anhydride copolymer as sole components, the proportion by weight of the thiamine to styrene-maleic anhydride copolymer being in the range of about 20 to 50:80 to 50, the said copolymer being an organic solvent-soluble copolymer of the styrene and maleic anhydride combined with each other in the ratio of maleic anhydride to styrene within the range of 1 to 1–5 and having an average molecular weight not less than about 1000 and not more than about 5000, the said thiamine being a member selected from the group consisting of thiamine, O,S-diacylthiamine, thiamine lower alkyl disulfide, S-lower alkoxycarbonylthiamine and O,S-di(lower)alkoxycarbonylthiamine. Such a thiamine compex is stable, non-incompatible, palatable and shock-proof. It is essentially tasteless and useful for the production of thiamine-containing pharmaceuticals and for enrichment of foods or animal feeds.

3,398,227
METHOD FOR PREPARATION OF WETTABLE SULFUR
Richard L. Every and Ralph Leroy Grimsley, Ponca City, Okla., assignors to Continental Oil Company, Ponca City, Okla., a corporation of Delaware
No Drawing. Filed Sept. 10, 1965, Ser. No. 486,514
5 Claims. (Cl. 424—162)

The reaction of H_2S and SO_2 bubbled through phosphate slime produces a finely divided sulfur which does not compact on standing. A small amount of a low-molecular-weight alcohol is beneficial.

ELECTRICAL

3,398,228
AIR STREAM DEVICE FOR COOLING GLASS FURNACE ELECTRODES
John F. Blumenfeld, Simsbury, Conn., assignor to Emhart Corporation, Bloomfield, Conn., a corporation of Connecticut
Filed Jan. 6, 1967, Ser. No. 607,752
4 Claims. (Cl. 13—6)

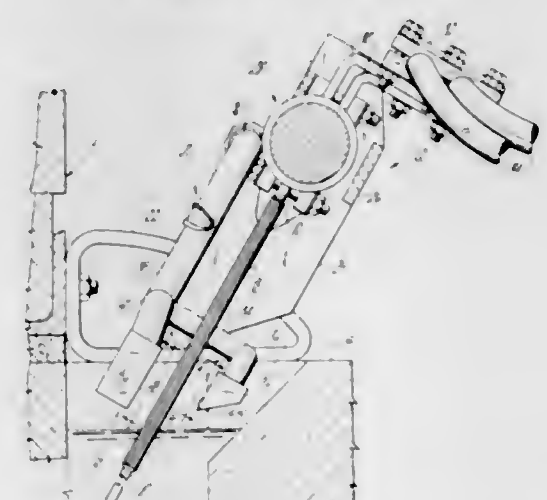

A device for air cooling an electrode used for electrically heating the material contained in an all electric or electrically boosted glass furnace or the like. The device is associated with a portion of the electrode projecting outwardly from the molten material and it concentrates its cooling effect on a longitudinally extending zone of the electrode. The actual cooling is achieved by a relatively large number of jets of air being directed onto the surface of the electrode so as to produce a turbulent scrubbing action thereon which enhances the transfer of heat from the electrode.

3,398,229
NONCONSUMABLE ARC ELECTRODE
Serafino Mario De Corso, Wilkins Township, Allegheny County, and Charles B. Wolf, North Huntingdon Township, Westmoreland County, Pa., assignors to Westinghouse Electric Corporation, East Pittsburgh, Pa., a corporation of Pennsylvania
Filed Oct. 29, 1964, Ser. No. 407,327
31 Claims. (Cl. 13—18)

An electrode for use in an arc furnace has a column assembly formed of a plurality of coaxially mounted tubes of graduated diameters forming fluid flow passageways and an electrode tip including a hollow generally annular outer portion secured to one or more of the tubes, the tip including an inner portion spaced from the outer portion to provide a fluid flow passageway for sheet flow of cooling fluid near the arcing surface, the inner portion

being mounted on a cylindrical support and fluid channeling member disposed at the lower end of the electrode between coaxial tubes, the inner portion of the tip having an annular passageway therein, preferably square or rectangular in cross section, in which is disposed a mag-

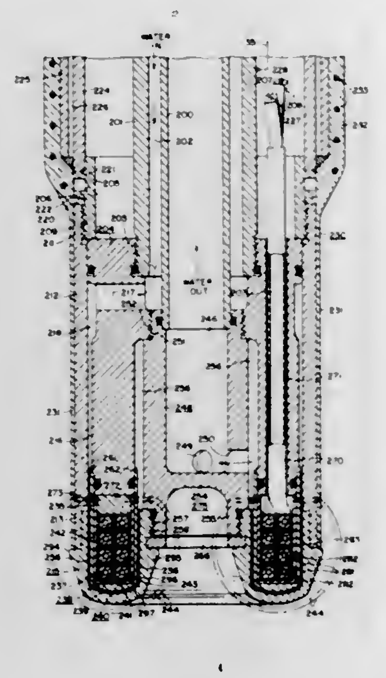

netic field coil within a coil housing composed of insulating material. In one embodiment the coil is composed of hollow conduit and is fluid cooled. Hub means, either fluid cooled or composed of refractory material, closes the central aperture of the structure at the arcing end thereof.

3,398,230
SEQUENTIAL CONNECTION OF SPEAKERS FOR MOVING SOUND SOURCE SIMULATION OR THE LIKE
Donald M. Park, deceased, late of Raleigh, N.C., by Mary S. Park, executrix, Raleigh, N.C., assignor to The Seeburg Corporation, Chicago, Ill., a corporation of Delaware
Filed Jan. 13, 1965, Ser. No. 425,353
7 Claims. (Cl. 84—1.18)

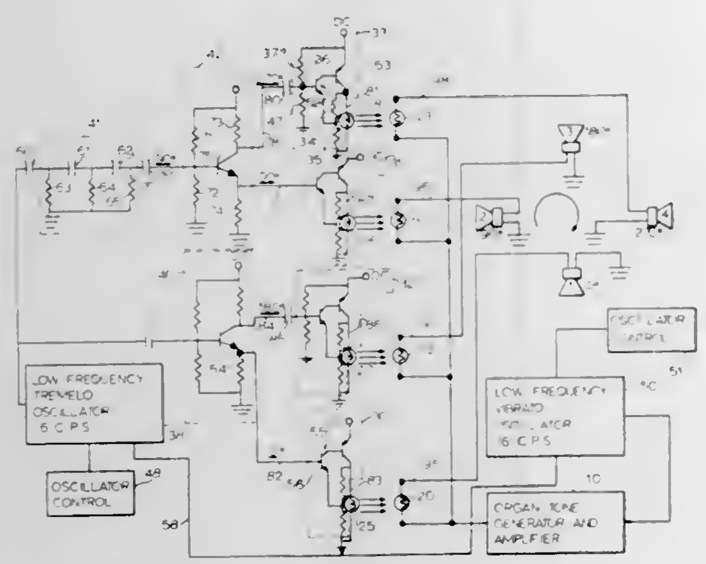

A plurality of speakers simulate a moving sound source by means of light sensitive impedances connected in series with each speaker and which are sequentially lighted by a corresponding number of voltage sources stepped sequentially out of phase.

3,398,231
LIQUID COOLING OF OPPOSITELY CHARGED CONDUCTIVE MEMBERS WITH ELONGATED INSULATED COOLANT PASSAGE BETWEEN
Edmund T. Sullivan, Jersey City, N.J., assignor to Air Reduction Company, Incorporated, New York, N.Y., a corporation of New York
Filed Aug. 18, 1964, Ser. No. 390,300
2 Claims. (Cl. 174—15)

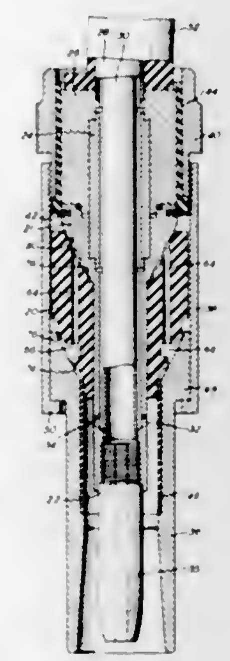

A cooling system for electrical apparatus wherein the cooling stream, e.g. water, is in contact with electrically conductive apparatus parts having a voltage differential therebetween. A shaped insulating means is positioned between said parts and provides a passage for the resultant electrically conductive cooling stream, said passage being of sufficient length to substantially reduce the effects of electrolysis. The insulating means further provides a liquid tight seal with the conductive parts for containment of the cooling stream.

3,398,232
CIRCUIT BOARD WITH INTERCONNECTED SIGNAL CONDUCTORS AND INTERCONNECTED SHIELDING CONDUCTORS
Norman Edwin Hoffman, Harrisburg, Pa., assignor to AMP Incorporated, Harrisburg, Pa.
Filed Oct. 19, 1965, Ser. No. 497,657
6 Claims. (Cl. 174—68.5)

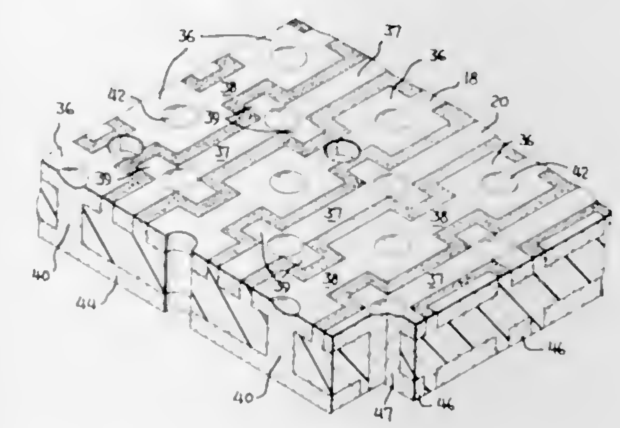

Panel member for making interconnections among electrical components and integrated circuits has conductors on opposite faces extending at right angles to each other with conducting plugs or pipes connecting conductors at coordinate locations. In order to make a particular circuit device, appropriate components or integrated circuits are mounted on one side of the panel and selected ones of the

plugs or pipes are drilled to break side-to-side connections. Additionally, conductors on both sides are drilled between pipes to interrupt specific conductors. Final conductors between components and integrated circuits are thus isolated by removing material from the board. This operation can be carried out by a conventional drilling apparatus.

3,398,233
ELECTRICAL CONDUCTOR OF FIBERS EMBEDDED IN AN INSULATOR
Gabriel V. de Lizasoain, Potomac, Md., and Richard E. Martin, Alexandria, and Hernan I. Otano, Falls Church, Va., assignors of 17.65 percent to Dennis G. Wyman, Rockville, Md., 13.25 percent to Ross Z. Pierpont, 4.40 percent to Edward A. Johnston, both of Baltimore, Md., 7.05 percent to Le Roy Le Master, Washington, D.C., 2.35 percent to Worth Rowley, Fairfax, Va., and 2.35 percent to Richard L. Townshend, Bethesda, Md.
Filed Apr. 20, 1965, Ser. No. 449,626
7 Claims. (Cl. 174—110)

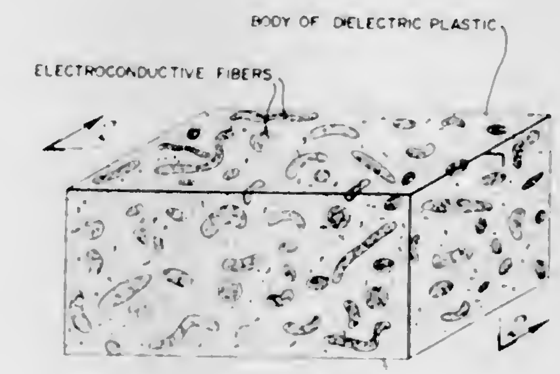

1. An electrical element comprising a homogeneous filamentary structure of uniform density constituted of matted fibers of electroconductive material, said filamentary structure embedded in a supporting body of dielectric plastic, said plastic completely filling all spaces between the fibers and covering the fibers free from adherence thereto.

3,398,234
MULTIPLE ADDRESS CIRCUIT
Robert L. Thomas, Los Angeles, Calif., assignor to American Telephone and Telegraph Company, New York, N.Y., a corporation of New York
Filed Aug. 4, 1964, Ser. No. 387,339
7 Claims. (Cl. 178—3)

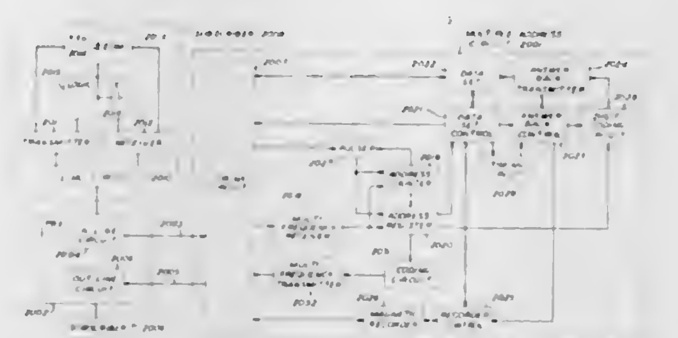

A multiple address circuit providing a method of distributing a data message to a plurality of addressees. The circuit includes a two way trunk which terminates in a modified PBX. When selectively called by a data subscriber via the PBX, the trunk circuit returns dial tone and connects a register which can store up to six addresses. After the last digit is dialed, a magnetic tape recorder is cut through and the data message is recorded thereon. When the originating subscriber thereafter hangs up, the multiple address circuit proceeds to originate a call through the PBX to the first addressee and transmit the message when the first addressee answers. When the message delivery is concluded the addressee station is disconnected and the multi-address circuit thereupon originates calls to each of the subsequent addressee stations in the same manner.

3,398,235
HEADWHEEL SPEED CONTROL SYSTEM FOR REPRODUCING MAGNETICALLY RECORDED TELEVISION SIGNALS
John Lewis Edwin Baldwin, Croydon, and John David Millward, Orpington, England, assignors to Rank-Bush Murphy Limited
Filed Nov. 6, 1964, Ser. No. 409,418
Claims priority, application Great Britain, Nov. 13, 1963, 44,802/63
6 Claims. (Cl. 178—6.6)

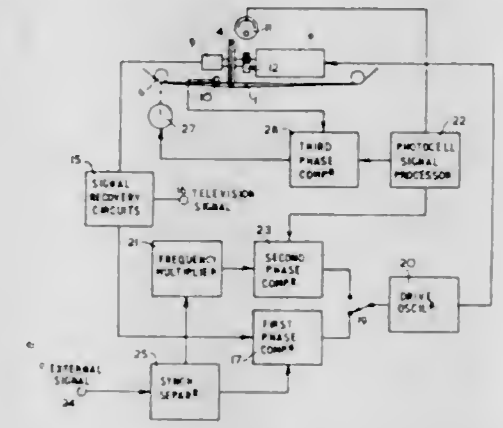

There is disclosed an apparatus for reproducing television signals recorded on magnetic tape as a succession of laterally-extending traces, by scanning the traces with transducer heads carried upon a rotatable wheel. The apparatus includes means for controlling the speed of rotation of the head wheel either by a first signal derived by phase comparison between signals having like frequencies derived respectively from the reproduced synchronizing signals and from a local synchronizing signal, or by a second signal derived by phase comparison between signals of like frequencies proportional respectively to the speed of rotation of the head wheel and to the local synchronizing frequencies.

3,398,236
TELEVISION RECEIVER BRIGHTNESS CONTROL
Friedrich Kratochvil, Hannover-Ricklingen, Germany, assignor to Telefunken Patentverwertungs-G.m.b.H., Ulm (Danube), Germany
Filed June 22, 1964, Ser. No. 376,795
Claims priority, application Germany, June 29, 1963, T 24,214
11 Claims. (Cl. 178—7.5)

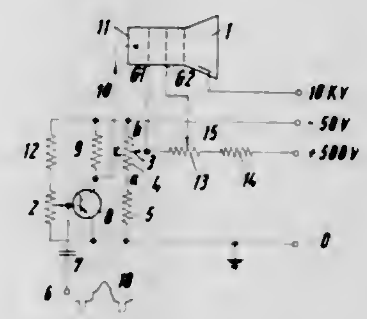

A circuit arrangement for adjusting the brightness of a TV picture tube having a cathode connected to an amplifier. A bias at a first control grid and a bias at a

second control grid are uniformly variable in such manner that the direct current voltage between these two control grids remains approximately unchanged.

3,398,237
SYSTEM FOR SYNCHRONIZING A SCANNING ELECTRON BEAM WITH A ROTATING BODY
Richard L. Paidosh, Minneapolis, Minn., assignor to Minnesota Mining and Manufacturing Company, St. Paul, Minn., a corporation of Delaware
Filed Feb. 26, 1965, Ser. No. 435,611
7 Claims. (Cl. 178—7.7)

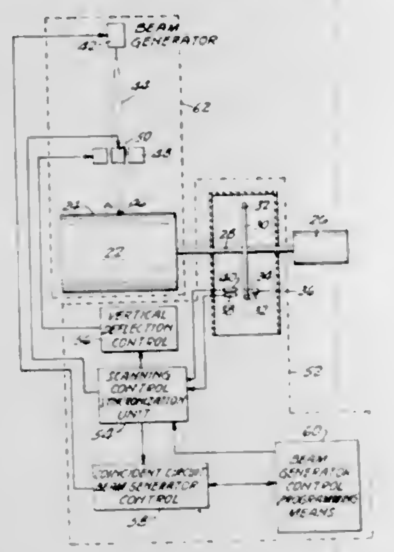

1. An electrical control system for synchronizing the scanning movements of a high energy beam on the peripheral surfaces of a rotating body so that said beam impinges on a particular point of said body during a predetermined arcuate displacement of said body, said body having reference means associated therewith for providing reference information concerning the position of at least one prechosen point located on peripheral surfaces of a said body, said system comprising
(a) a first signal generating means for producing signals in response to such reference information indicating revolutions of a said body;
(b) a second signal generating means for producing signs in response to such reference information indicating arcuate displacement of said one point during each revolution;
(c) beam scanning control means for detecting when a predetermined relationship occurs between the output of said first signal generating means and the output of said second signal generating means and for producing an output signal therefrom when a said predetermined relationship occurs;
(d) means interconnecting each of said first signal generating means and said second signal generating means with said beam scanning control means;
(e) beam generator control means responsive to said beam scanning control means for producing an electrical signal output adapted to actuate a beam source;
(f) beam deflecting control means responsive to said beam scanning control means for moving a said beam through a predetermined scan sequence; and
(g) beam programming means responsive to said beam scanning control means for controlling the actuating interval of said beam generator control means and for actuating said beam deflecting control means to return a said beam to a starting position.

6. A method for synchronizing for a predetermined period of time scanning movements of a high energy beam with a predetermined point on the surface of a rotating body, wherein the source of said high energy beam is maintained at a fixed distance from the surface of said rotating body, said method comprising the steps of
(a) generating signals in response to rotational movements of said body to indicate the angular position of a said predetermined point on the surface of a said rotating body;
(b) transmitting said signals to control means for establishing the occurrence of a said predetermined point on said body reaching a predetermined position with respect to said fixed beam source; and
(c) synchronizing the scanning rate of said beam with the angular velocity of a said predetermined point while simultaneously maintaining the intensity of such beam at a predetermined level for a predetermined interval of time.

3,398,238
DEVICE FOR MOUNTING AND ELECTRICALLY ISOLATING COMPONENTS OF A TELEVISION RECEIVER
Donald J. Siebold, North Syracuse, N.Y., assignor to General Electric Company, a corporation of New York
Filed Feb. 19, 1965, Ser. No. 434,046
3 Claims. (Cl. 178—7.8)

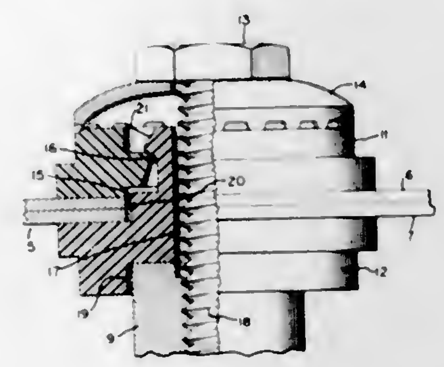

A cathode ray tube with a conductive outer surface is mounted on and isolated from a die cast metal mask including a plurality of screw receiving boss members. A wire sling surrounding the cathode ray tube is encircled by a plurality of flexible conductive straps, each strap including an aperture at both extremities. The apertures on each strap are aligned, clamped between two insulative interlocking annular members which extend through the apertures, and positioned over one boss member. A screw is inserted through the apertures, the annular members, and the boss member.

3,398,239
MULTILEVEL CODED COMMUNICATION SYSTEM EMPLOYING FREQUENCY-EXPANDING CODE CONVERSION
Gerald Rabow, Nutley, N.J., assignor to International Telephone and Telegraph Corporation, Nutley, N.J., a corporation of Maryland
Filed May 21, 1964, Ser. No. 369,234
24 Claims. (Cl. 178—66)

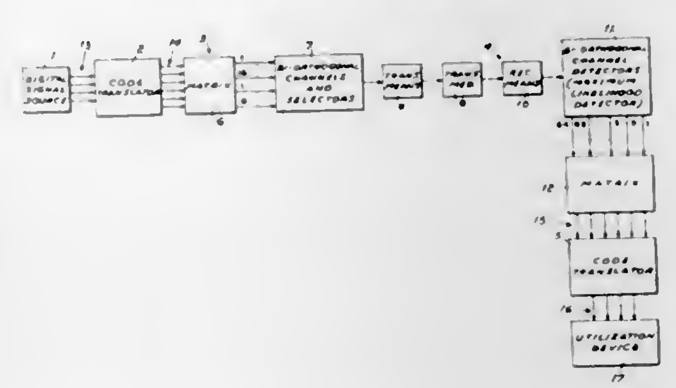

First binary signals capable of representing 16 amplitude levels having an information bandwidth less than the transmission bandwidth are translated to second binary signals capable of representing 64 amplitude levels having an information bandwidth adjusted to fully occupy the transmission bandwidth. Each of the second binary signals are represented by a different signal having a predetermined frequency and phase which is transmitted. The transmitter signal is detected and translated to binary signals for utilization identical to the first binary signals.

3,398,240
SIGNAL ROUTING CONTROL SYSTEM
Eugene M. Owens, 2609 Parish Ave., Newport News, Va. 23607
Filed Dec. 21, 1964, Ser. No. 419,792
2 Claims. (Cl. 179—1)

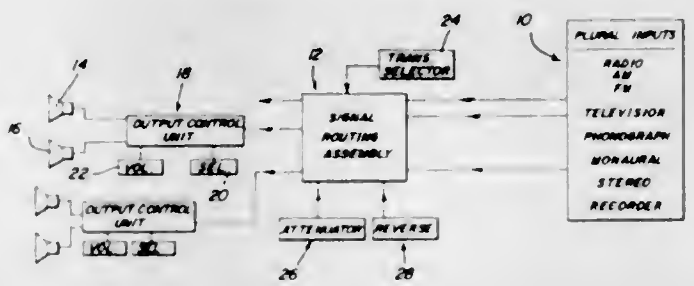

A system for distribution of a plurality of audio signals to a plurality of remote locations from a plural input source with selectivity and volume controls at both the remote locations and at a central station providing thereby a wide choice of audio signals at the remote locations.

3,398,241
DIGITAL STORAGE VOICE MESSAGE GENERATOR
Lyle H. Lee, San Jose, Calif., assignor to International Business Machines Corporation, Armonk, N.Y., a corporation of New York
Filed Mar. 26, 1965, Ser. No. 443,030
9 Claims. (Cl. 179—1)

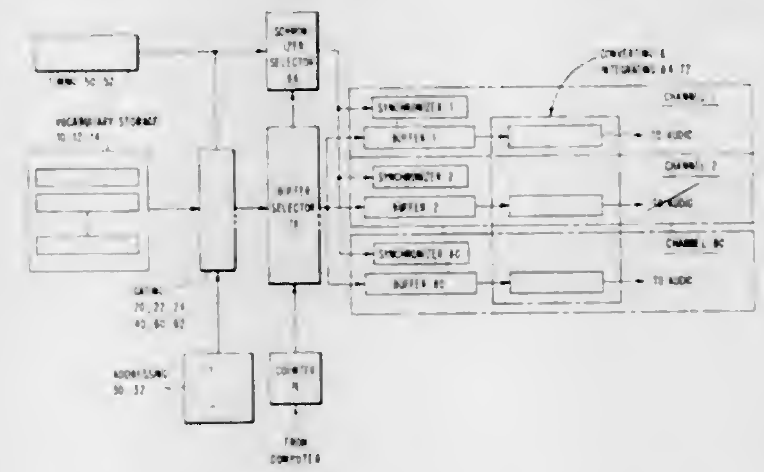

A voice signal generator, wherein a digital code representing a predetermined word is stored on a recirculating storage in interleaved form along with an address whereby, by sensing the address, the individual segments of the word can be read from the store and converted to an analog signal.

3,398,242
ARRANGEMENT FOR PICKING-UP, TRANSMITTING AND REGISTERING SIGNALS
Egon Zoller, 11 Lebensteig, 8037 Zurich, Switzerland
Filed Mar. 22, 1965, Ser. No. 441,545
2 Claims. (Cl. 179—18)

1. In a signal detector and registering circuit in an automatic telephone exchange having a subscriber station including a subscriber circuit and a supervisory circuit, two diodes connected to each other and connected between the talking lines of the subscriber circuit, said two diodes constituting a bridge adapted as an input circuit to a semiconductor amplifier, a semiconductor amplifier connected at its input to the midpoint between said two diodes, a fast release relay connected to the output of said semiconductor amplifier, a slow release relay connected to the output of said fast release relay

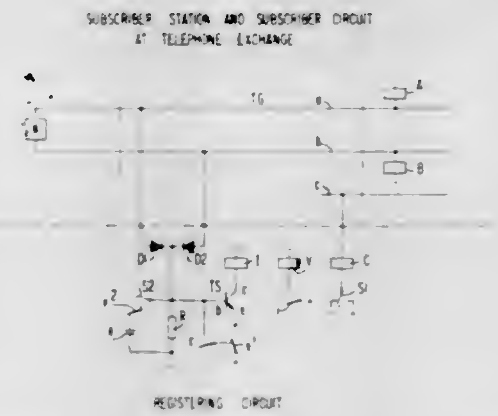

and connected to a registering device in a registering circuit, a high ohmic relay connecting the supervisory circuit to said registering circuit, a supply battery energizing said high ohmic relay and said semiconductor amplifier, a changeover switch for connecting said high ohmic relay alternately to the negative and positive poles of said supply battery which cuts off the registering circuit and blocks the semiconductor amplifier on a call from the supervisory circuit.

3,398,243
CIRCUIT ARRANGEMENT FOR SUPERVISING THE TERMINAL EQUIPMENT BELONGING TO A JUNCTION LINE EXTENDING BETWEEN TWO TELEPHONE EXCHANGES
Nils Herbert Edström, Vallingby, Sweden, assignor to Telefonaktiebolaget L M Ericsson, Stockholm, Sweden, a corporation of Sweden
Filed Aug. 27, 1965, Ser. No. 483,258
Claims priority, application Sweden, Sept. 23, 1964, 11,402/64
7 Claims. (Cl. 179—18)

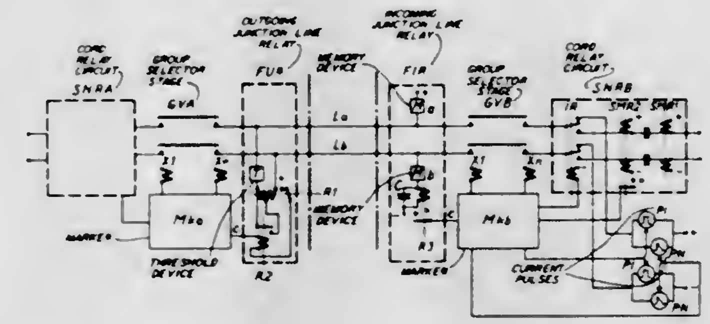

There is disclosed a circuit arrangement for supervising the function of a two-wire junction line connecting two telephone exchanges. The junction line connects an outgoing terminal to an incoming terminal. At one of the terminals a threshold means has a low resistance as long as it receives a current greater than a given value and has a high resistance when it receives a current less than a given value for giving an indication as long as it has a low resistance, and is connected between the two wires. A memory means at the other terminal has a low resistance when it receives a current greater than a given value and it retains the low resistance in accordance with the rate of decay of current applied thereto for giving an indication when having its low resistance. The circuit arrangement further comprises a source of electrical energy and means for connecting the source and the memory means in

series between the two wires. A control means serves to apply current sources with predetermined rates of decay to the memory means for controlling the resistance thereof.

3,398,244
COIN TELEPHONE MOUNTING ASSEMBLY
Edward S. Ertl, Island Lake, and Leslie A. Hannula, Waukegan, Ill., assignors to Acoustics Development Corporation, Park Ridge, Ill.
Filed Apr. 5, 1965, Ser. No. 445,518
6 Claims. (Cl. 179—189)

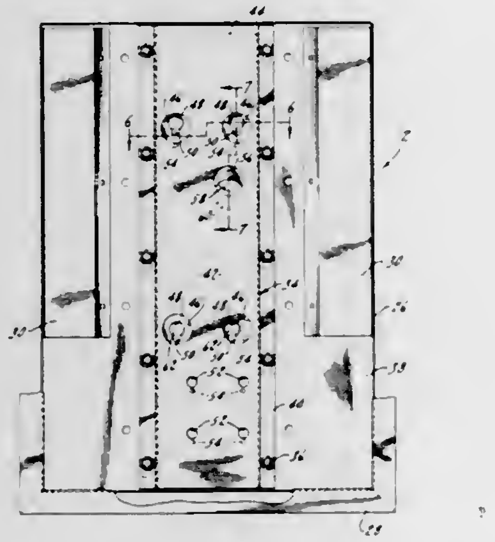

A security mounting assembly for a coin telephone. A sliding mounting member behind a retainer structure is locked in engagement with studs on the back of a telephone assembly so that unauthorized removal of the telephone is prevented as long as the coinbox remains locked.

3,398,245
PRINTED CIRCUIT SWITCH
Robert E. Hartsock, La Habra, Calif., assignor to United-Carr Incorporated, Boston, Mass., a corporation of Delaware
Filed Sept. 13, 1966, Ser. No. 579,059
6 Claims. (Cl. 200—11)

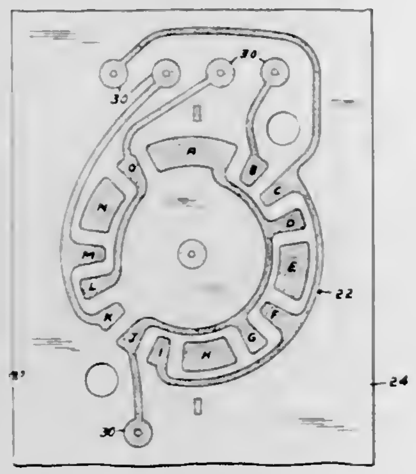

This is an improved switch with a printed circuit stator having 20 stationary contacts equally spaced in a circle pattern. The switch rotor moves over the contacts in ten equal steps in one complete cycle of operation and has four interconnected contacts spaced apart equivalent to the stationary contact spaces in a 2–1–2 space group pattern. The switch input is connected to the four outputs in a binary sequence upon rotation of the rotor through one cycle. This is accomplished by having the stationary contacts interconnected with each other and the input and four output terminals as follows: Contacts 19, 20, 1, 4, 8 and 12 to the input; contacts 3, 7 and 11 to the first output, contacts 13 and 15 to the second output, contacts 14 and 18 to the third output, and contact 2 to the fourth output.

3,398,246
BRAKE WEAR ALERT DEVICE
William Linet, 7700 SW. 134th St., Miami, Fla. 33156
Filed June 29, 1966, Ser. No. 561,596
9 Claims. (Cl. 200—61.4)

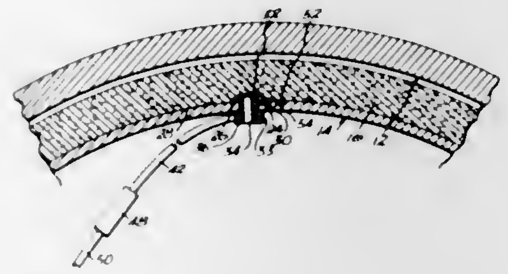

1. A brake wear alert device for a vehicle including, a brake drum and a brake shoe with a brake lining carried on the shoe in confronting relation to the brake drum and means to reciprocally move the lining of the shoe into and out of high friction-producing engagement with the shoe; and a switch arm carried in the shoe and lining and including a headed plug having a stem with a central axial bore therethrough and a cross bore in the head and a conductor pin in the axial bore with one end extending outwardly of the distal end of the stem, and a conductor means connected through the cross bore to the conductor pin and having connector means on the remote end thereof with the portion of the conductor means exterior of the plug being insulated; and said shoe having a through hole sized to snugly permit passage of the stem therethrough with the pin projecting into the liner.

3,398,247
ELLIPTICAL TANK STRUCTURE FOR OIL CIRCUIT BREAKERS
James R. McCloud, Burbank, Calif., assignor to I-T-E Circuit Breaker Company, Philadelphia, Pa., a corporation of Pennsylvania
Filed Jan. 6, 1966, Ser. No. 519,032
5 Claims. (Cl. 200—150)

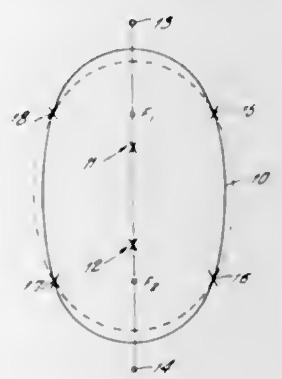

1. In combination; an oil filled tank, interrupter means contained within said tank, and an operating mechanism housing connected to the exterior of said oil filled tank; said oil filled tank being elliptical in cross-section; said elliptical tank being laterally expansible responsive to internal pressure caused by the operation of said interrupter means and having at least one line along the

height thereof which experiences substantially zero lateral movement as said tank walls are expanded by said internal pressure; structural support means extending from said tank to said mechanism housing; said structural support means connected to said tank at approximately said line of zero lateral movement.

3,398,248
CAM ACTUATOR
Ralph E. Klauss, Rochester, N.Y., assignor to Eastman Kodak Company, Rochester, N.Y., a corporation of New Jersey
Filed July 7, 1967, Ser. No. 651,824
6 Claims. (Cl. 200—153)

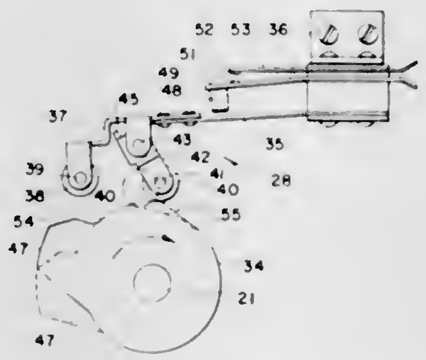

A reciprocating cam device for operating a movable element, such as a component of an electric switch, to position the element in one location during movement of the cam in one direction and in another location during movement of the cam in the opposite direction, with means being provided to maintain the element in the location in which it is so positioned while the cam moves through a corresponding predetermined portion of its movement path.

3,398,249
MOLDED CASE CIRCUIT BREAKER AND MOUNTING MEANS THEREFOR
Edward P. Dessert, Cedar Rapids, Iowa, assignor to Square D Company, Park Ridge, Ill., a corporation of Michigan
Filed Feb. 13, 1967, Ser. No. 615,435
6 Claims. (Cl. 200—168)

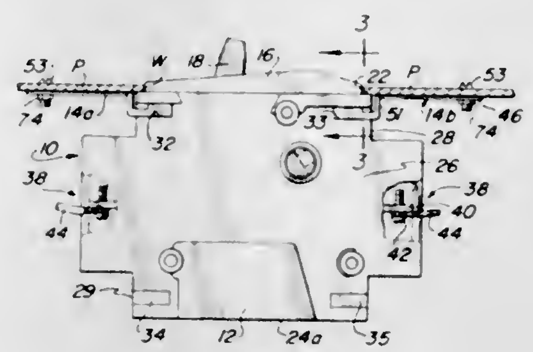

A pair of mounting brackets are removably secured selectively at either the top or bottom of a molded case circuit breaker. When the brackets are at the bottom, the circuit breaker may be mounted with its bottom surface against the outer surface of a panel. When the brackets are at the top, the circuit breaker may be mounted against the inner surface of a panel with an upper portion protruding through an opening in the panel. Screw-type wire connectors at opposite ends of the circuit breaker are reversible so that the wire-clamping screws can be made accessible to a conventional screwdriver irrespective of the mounted position of the circuit breaker.

3,398,250
DELAY SWITCH FOR REVERSING ELECTRIC MOTORS
Donald R. Bowers, Akron, Ohio, assignor to The Hoover Company, North Canton, Ohio, a corporation of Delaware
Filed Nov. 15, 1966, Ser. No. 594,580
10 Claims. (Cl. 200—157)

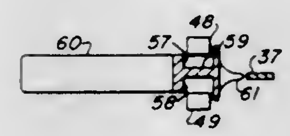

Electrical switch means is connected for reversing the direction of rotation of an electric motor. Stop means is arranged at the "off" position so the switch means cannot be moved directly from one "on" position to the other and this provides a mechanical delay in reversing rotation of the motor.

3,398,251
MICROWAVE HEATING OF SUBSTANCES UNDER HYDROSTATIC PRESSURE
Morris R. Jeppson, Alamo, and John C. Harper, Davis, Calif., assignors to Cryodry Corporation, San Ramon, Calif., a corporation of California
Original application May 4, 1964, Ser. No. 364,405, now Patent No. 3,335,253, dated Aug. 8, 1967. Divided and this application Mar. 15, 1967, Ser. No. 643,757
6 Claims. (Cl. 219—10.41)

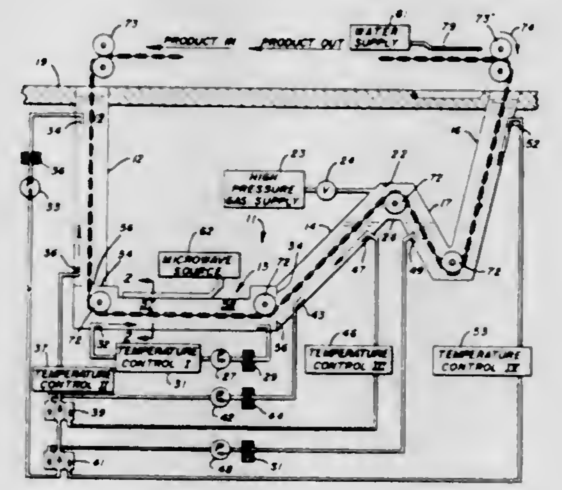

Microwave heating of substances under pressure by passing said substances through a liquid to a water-free region therein and at a depth to create a hydrostatic pressure on said substances, and then microwave heating said substances in said region.

3,398,252
HEAT TREATMENT APPARATUS
Ashley P. Bock, Baltimore, and Frank E. Henry and John A. Redmond, Ellicott City, Md., assignors to Westinghouse Electric Corporation, Pittsburgh, Pa., a corporation of Pennsylvania
Filed Nov. 15, 1965, Ser. No. 507,932
2 Claims. (Cl. 219—10.61)

An apparatus for continuous heating of longitudinally-advancing tin plated steel strip entering a quenching station to obtain alloying of the tin with the steel. A first heating and control means heats the strip to obtain melting of the tin along a flow-line automatically held at a fixed location along the heating line irrespective of

strip speed, and a second heating and control means heats the strip further to raise the strip temperature with a high degree of accuracy to different speed-determined

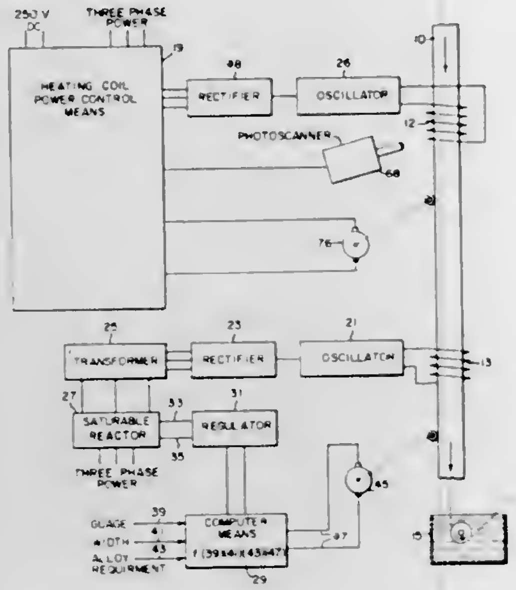

values by automatic regulation in reliance on the stable reference point conditions existing in the strip at the fixed site of the flow line.

3,398,253
GRINDING MACHINE WITH ELECTRIC DISCHARGE MACHINING MECHANISM FOR RESHAPING CRUSH ROLL
John K. Rye, Beverly Hills, Mich., assignor to F. Jos. Lamb Company, Inc., Warren, Mich., a corporation of Michigan
Filed Oct. 19, 1965, Ser. No. 497,879
7 Claims. (Cl. 219—69)

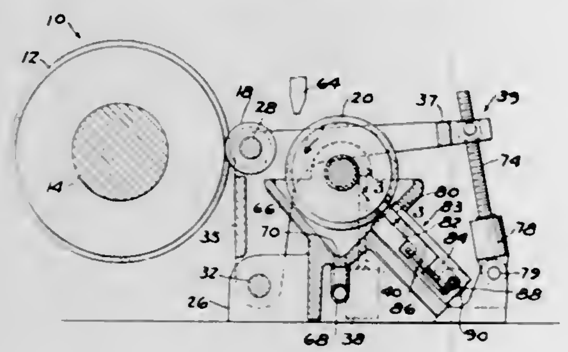

A grinding machine having a wheel dressing mechanism in the form of a crush roll formed of hard material such as a metal carbide and an electrode wheel for imparting the desired profile to the crush roll by means of electric discharge machining. The crush roll can be rocked from an operative position with the grinding wheel to an operative position with the electrode wheel.

3,398,254
METHOD AND APPARATUS FOR ELECTRIC RESISTANCE FLASH WELDING
Eberhard Rietsch, Burscheid, Germany, assignor to Theodor Wuppermann Gesellschaft mit beschrankter Haftung, Leverkusen, Germany
Filed Dec. 30, 1964, Ser. No. 422,223
Claims priority, application Germany, Jan. 10, 1964, W 35,948
2 Claims. (Cl. 219—97)

A method and apparatus for electric resistance flash welding two crankshaft halves. The apparatus includes a quick acting device for moving the workpieces into engagement with each other thru a fixed length stroke. In advance of welding the parts, a gauge is interposed between them. The gauge has a thickness equal to the fixed stroke of the quick acting device plus a value correspond-

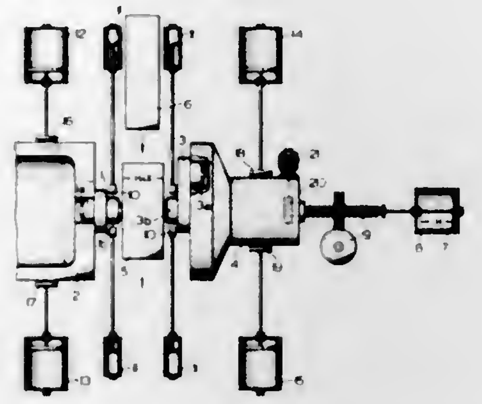

ing to the elongation of the parts due to preheating. After the gauge is withdrawn, an induction heater is placed between the parts to preheat them. The heater is then withdrawn and the parts are brought into welding engagement.

3,398,255
HIGH SPEED PULSE WELDING
Bernard J. Aldenhoff, Oconomowoc, Wis., assignor, by mesne assignments, to Harnischfeger Corporation, West Milwaukee, Wis., a corporation of Wisconsin
Filed Jan. 8, 1964, Ser. No. 336,484
10 Claims. (Cl. 219—108)

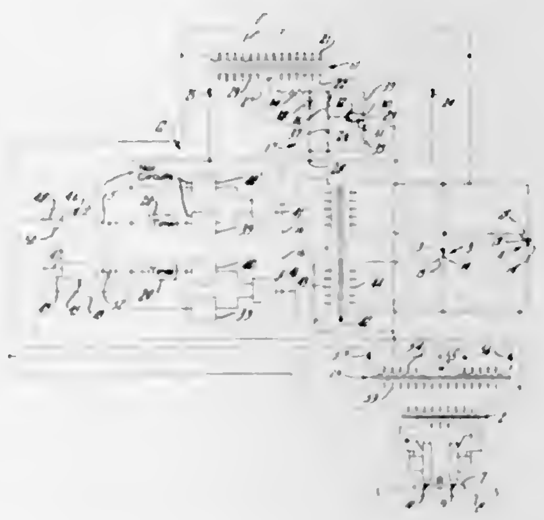

A high frequency alternating current source having a frequency of at least 1000 cycles per second is connected in a series with a pair of paralleled rectifiers of opposite polarity alternately conducting the negative and positive half cycles of the current to a resistance seam welder. A unijunction pulse generator creates a train of sharp pulses in synchronism with the output of the high frequency generator. An "and" logic circuit has the train of pulses from the generator connected as one input. A flip-flop circuit is connected across the seam welder to provide a feedback pulse signal which is connected to the second input of the "and" logic circuit to conjointly control creation of a trigger pulse to the rectifiers. The feedback signal is fed through an adjustable timer to make one or more of the main pulses ineffective.

The pulses from the main pulse generator are phase controlled such that the point in the cycle of the welding current at which the corresponding rectifier is fired and is controlled to vary the power input to seam welder.

3,398,256
WELDING METHOD AND ELECTRODE
William R. Foley, Jr., Allison Park, Pa., assignor to The McKay Company, Pittsburgh, Pa., a corporation of Pennsylvania
No Drawing. Filed Oct. 14, 1965, Ser. No. 496,151
6 Claims. (Cl. 219—146)

1. A method of forming a wear-resistant weld deposit comprising forming in an arc welding reaction zone a nickel base weld metal pool, introducing into the reaction zone a component comprising at least one of the materials of the group consisting of titanium, titanium alloy, titanium carbide and oxide of titanium, alone or combined with another oxide, such component containing titanium in an amount between about .8% and about 16% by weight of the weld deposit, introducing into the reaction zone a carbide forming material in an amount sufficient to render both carbon and titanium soluble in the nickel, said carbide forming material comprising at least one of the materials of the group consisting of chromium, iron, manganese, molybdenum, tungsten, vanadium, columbium and silicon in an amount sufficient to produce a carbide former equivalent of at least 3% by weight of the weld deposit and maintaining in the reaction zone an amount of carbon at least equal to the total of (1) the amount of carbon required to form the titanium carbide particles plus (2) the amount of carbon required to reduce titanium oxide and other metal oxides reducible by carbon if present plus (3) the amount of carbon required to combine with oxygen derived from the reaction zone atmosphere and thereby forming titanium carbide particles by crystallization in situ the solidifying weld metal which forms the matrix.

3,398,257
FERROUS WELDING ELECTRODE FOR MANUAL ARC WELDING
Albert E. Wiebe, West Manchester Township, York County, Pa., assignor to The McKay Company, Pittsburgh, Pa., a corporation of Pennsylvania
No Drawing. Filed Aug. 10, 1965, Ser. No. 478,731
8 Claims. (Cl. 219—146)

1. A ferrous welding electrode for manual arc welding comprising a tubular sheath with fill inside the sheath and a coating on the outside of the sheath, the sheath being of ferrous metal, the electrode containing titanium, the coating containing no more than about 1.6% titanium, the fill containing up to about 22% titanium, the titanium of the fill being contained in at least one of the materials of the group consisting of titanium metal, alloys of titanium with other metal and titanium carbide, the total amount of titanium in the electrode being equal to from about 1% to about 22%, the electrode also containing carbon in an amount equal to not less than about ($\frac{1}{4}\times$percent titanium$+$1.0 percent) and not more than about ($\frac{1}{4}\times$percent titanium$+$9.0 percent), all percentages being by weight of the electrode metal.

3,398,258
APPARATUS FOR IMPROVING THE TENSILE PROPERTIES OF WIRE
James McFarlane, Penn, Wolverhampton, England, assignor to G.K.N. Somerset Wire Limited, London, England, a British company
Filed Sept. 21, 1965, Ser. No. 488,929
9 Claims. (Cl. 219—155)

1. Apparatus for effecting permanent elongation of martensitic forming steel wire, so as to improve the creep resistance thereof, said apparatus comprising rotary means adapted to apply tension to a length of wire passing over said rotary means in engagement therewith, means for supplying a heating current to and along a predetermined length of the wire which is under tension, so as to heat such length to a temperature such that at the tension applied to the wire permanent elongation thereof is effected, said heating current supply means comprising a rotary member having a wire engaging periphery formed as a set of commutator segments spaced around the circumference of the associated rotary member, with circumferentially adjacent segments electrically insulated from one another, a current supply means associated with each set of commutator segments and comprising at least one current carrying brush, each arranged to make contact with the commutator segments at a circumferential position such that

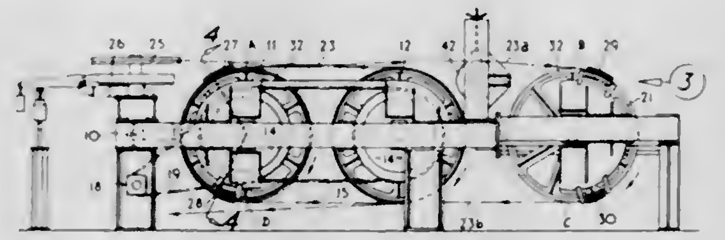

each segment which is in electrical contact with a current carrying brush, is out of electrical contact with that portion of the wire engaging periphery of the rotary member onto or off which the length of wire to be heated momentarily passes, and each commutator segment being of such a small circumferential length as to provide in parallel with the length of wire in engagement with its periphery a shunt resistance of value great enough as to preclude sparking or arcing by shunt current flow of magnitude great enough to result in local formation of martensite in the steel wire.

3,398,259
PHOTOELECTROSTATIC COPYING MACHINE
John L. Tregay, Wilmette, and Kristian L. Helland, Schaumberg, Ill., assignors to Addressograph-Multigraph Corporation, Mount Prospect, Ill., a corporation of Delaware
Filed Aug. 12, 1964, Ser. No. 389,037
6 Claims. (Cl. 219—216)

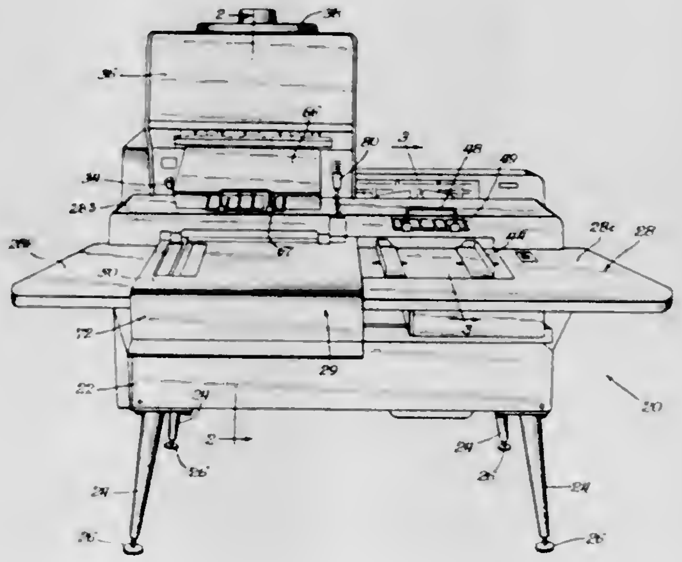

An automatic copying machine has a drive system propelling an original and copy sheet in synchronism through the machine; the original moving past a light, and the copy sheet moving past charging, exposing, developing and fusing apparatus. A control circuit rapidly brings the machine to a ready condition, and places the machine in an operating condition when a copy is made.

The fuser operates in a high energy condition during warm-up, and in a low energy condition until a copy is made, when it operates in an intermediate energy condition.

3,398,260
CORDLESS ELECTRIC IRON
Vincent A. Martens, Racine, Wis., assignor to Scovill Manufacturing Company, Waterbury, Conn., a corporation of Connecticut
Filed Aug. 29, 1966, Ser. No. 575,838
7 Claims. (Cl. 219—247)

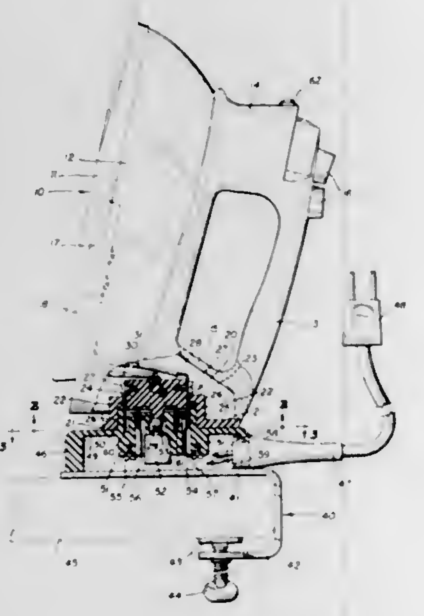

1. An electric iron assembly which comprises
(a) a stand having means for connecting it to a source of electrical current,
(b) a cordless iron having a heating element therein,
(c) a conductor member on one of said iron and stand including an insulating plate, a pair of concentric different-diameter ring-form contacts, and a switch contact concentric with the ring-form contacts mounted in said insulating plate, and
(d) a conductor member on the other of said iron and stand including an insulating plate, a pair of contacts each mounted in the insulating plate to engage one of the ring-form contacts, a switch, and a switch closing contact for engagement with the switch contact of the first conductor member when the iron is placed on end with its conductor member resting on the conductor member of the stand,
(e) the iron and its conductor member being pivotable about the axis of the conductor members when said conductor members are in current conducting engagement with each other.

3,398,261
ELECTRODE-TYPE STEAM BATH STEAM GENERATOR
Durward W. Mays, 708 Statti St., Humble, Tex. 77338
Continuation-in-part of application Ser. No. 401,319, Oct. 5, 1964. This application Mar. 3, 1967, Ser. No. 636,579
3 Claims. (Cl. 219—285)

A steam generator employing electric current flow between a pair of electrodes, the spacing of which is adjustable from the exterior of the generator, uses a timer to control the period of steam generation. The timer operates a solenoid valve. In one position the valve permits water to flow into the generator at a regulated rate. When the timer terminates the steam generating cycle, the valve is switched to its other position, simultaneously terminating flow of water to the generator and opening the generator to a drain so as to remove water containing increased

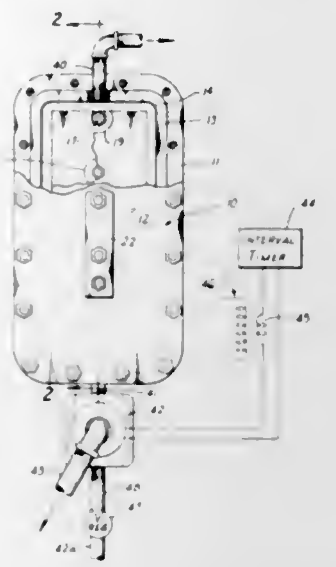

concentrations of salt each time the generator is operated.

3,398,262
PIPE HEATING ARRANGEMENT
Walter C. Kahn, Westport, Conn., assignor to Electro-Trace Corporation, Danbury, Conn.
Continuation-in-part of application Ser. No. 297,875, July 26, 1963. This application Sept. 14, 1967, Ser. No. 667,719
10 Claims. (Cl. 219—301)

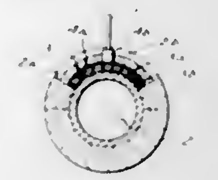

A pipe heating arrangement comprising, in combination, metallic pipe means adapted to contain a fluid and including at least two pipe portions having respective end portions adjacent to but spaced from each other; bridging means overlying the surface of the respective end portions over part of the circumference thereof and bridging the space between said pipe portions; a thin flat elongated heating strip including a thin resistance element, a pair of elongated electrodes electrically connected with said resistance element so that current flows transversely through said resistance element across the length of the same, electrical insulating means surrounding and substantially coextensive with said resistance element and electrodes, and connector means at one end of said strip and having terminals connected with said electrodes, respectively, said strip being disposed on the surface of said metallic pipe means and bridging means extending along the length of both and said electrical insulating means insulating said heating strip from said metallic pipe means and from said bridging means; and thermal insulating means surrounding said pipe means and said heating strip so as to minimize heat radiation to the ambient atmosphere.

3,398,263
HIGH WALL INCANDESCENT ELECTRIC HEATER
Ralph G. Ortiz, Tonawanda, and Cuthbert Grant, Williamsville, N.Y., assignors to Markel Electric Products, Inc., Buffalo, N.Y., a corporation of New York
Filed Feb. 24, 1965, Ser. No. 434,992
10 Claims. (Cl. 219—347)

An incandescent electric radiant heating element of generally rectangular cross section is supported in a reflector

unit to form a radiant heater assembly. The element and reflector are oriented to project a beam of heat forwardly and downwardly. Means are provided to prevent operation of the heating element unless the assembly is properly

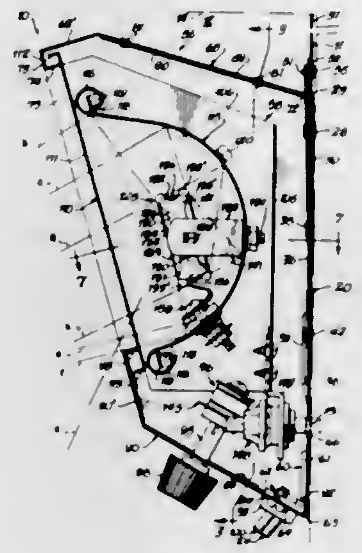

mounted against a wall. The assembly is provided with gage means so designed as to render inoperative the means for securing the assembly to the wall unless the assembly is spaced at least a minimum safe distance from the ceiling and side walls of the room.

3,398,264
PIZZA WARMER
Lawrence Katzman and Robert Dublirer, New York, N.Y., assignors to Kaz Heating Products, Inc., New York, N.Y., a corporation of New York
Filed Aug. 23, 1965, Ser. No. 481,720
3 Claims. (Cl. 219—454)

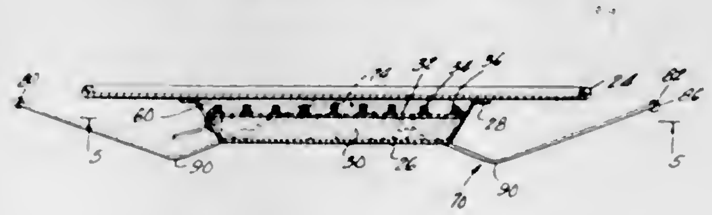

A pizza warming tray comprising a metallic disc having high heat conductivity and being relatively larger in diameter having a receptacle disposed beneath the disc and secured thereto with electric heating coil means disposed in the receptacle, said heating coil means being of less than one-half the diameter of said metallic disc.

3,398,265
ELECTRONIC COUNTER
James John Drage, London, England, assignor to Bell Punch Company Limited, London, England, a British company
Continuation-in-part of application Ser. No. 232,663, Oct. 18, 1962. This application Dec. 10, 1963, Ser. No. 331,335
Claims priority, application Great Britain, Oct. 19, 1961, 37,506/61, 37,507/61
8 Claims. (Cl. 235—92)

There is disclosed an electronic ring counter comprising a multi-cathode cold cathode indicating tube with a separate trigger device in series with each of the cathodes of the indicating tube. This trigger device may be either a space discharge or a solid state device or a combination of such devices, in particular, a series combination of a diode rectifier and switching diode, or a solid state switching triode. Capacitative coupling is provided from each cathode of the indicating tube to the trigger electrode of the trigger device in series with the next indicating tube cathode. To shift the glow from one of those cathodes to the next, the indicating tube anode voltage is lowered enough to extinguish the glow at that cathode, held there long enough for deionisation to occur in the trigger device

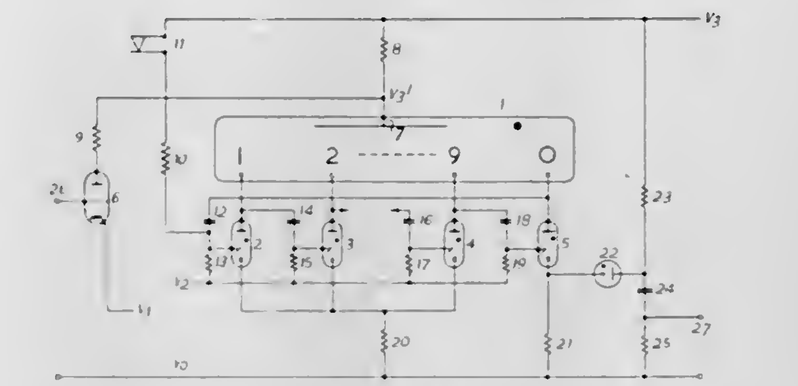

in series with that cathode but not in the indicating tube, and then restored. The small current reestablished at that cathode produces a change of potential which is applied to the trigger device at the next indicating tube cathode, causing that device to conduct, whereby a glow is built up in the indicating tube on that next cathode thereof.

3,398,266
AERODYNAMIC COEFFICIENTS COMPUTER CIRCUIT
Joseph W. Willis, Kensington, Md., assignor to the United States of America as represented by the Secretary of the Navy
Filed Dec. 2, 1964, Ser. No. 415,544
6 Claims. (Cl. 235—150.2)

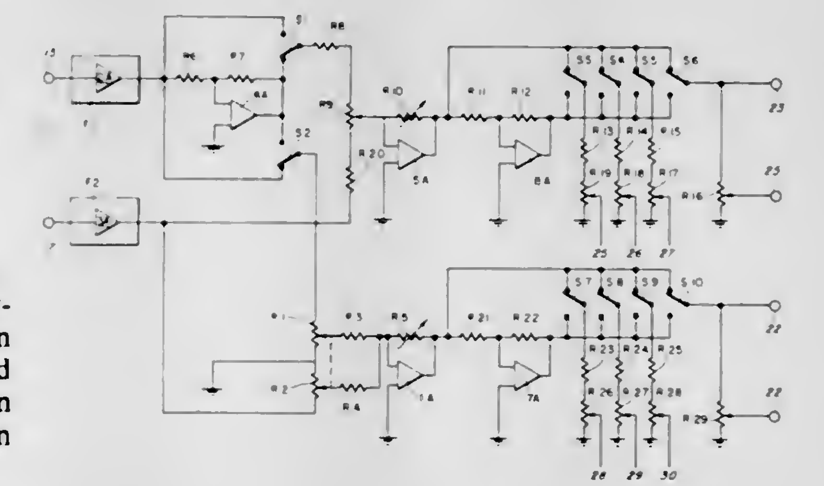

A computer circuit having a center-grounded input potentiometer with a pair of input terminals at its opposite ends and a pair of gaged movable output terminals engaging each half section thereof to simultaneously inversely vary the effective impedance of each half section. The output terminals are commonly connected to an output amplifier having a variable impedance feedback path.

3,398,267
AIRCRAFT VERTICAL PATH COMPUTER
Edwin R. Hattendorf, Cedar Rapids, Iowa, assignor to Collins Radio Company, Cedar Rapids, Iowa, a corporation of Iowa
Filed Sept. 14, 1964, Ser. No. 396,154
8 Claims. (Cl. 235—150.26)

An aircraft vertical path computing mechanism developing accurate information of ground distance to a way

point, flight path angle, vertical path deviation, and time-to-go from input parameters of distance, air speed and altitude in a manner such that the computed output

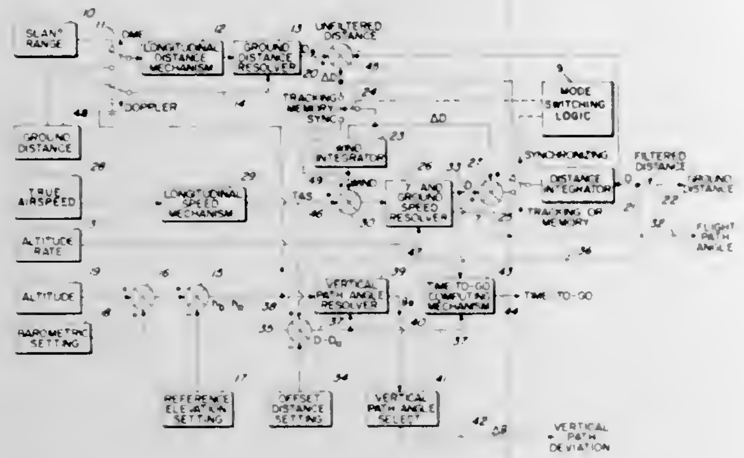

signals are compensated for longitudinal wind and distance measuring equipment noise.

3,398,268
NAVIGATION SYSTEM OPERATING ON THE TRANSIT TIME PRINCIPLE
Alexander Prichodjko, Oberelchingen, Kreis Neu-Ulm, Albert Simianer, Thalfingen, Kreis Neu-Ulm, and Hartmut Hipp, Gerlingen, Kreis Leonberg, Germany, assignors to Telefunken Patentverwertungs-G.m.b.H., Ulm (Danube), Germany
Filed July 8, 1963, Ser. No. 293,481
Claims priority, application Germany, July 6, 1962, T 22,420; Sept. 19, 1962, T 22,757
23 Claims. (Cl. 235—150.27)

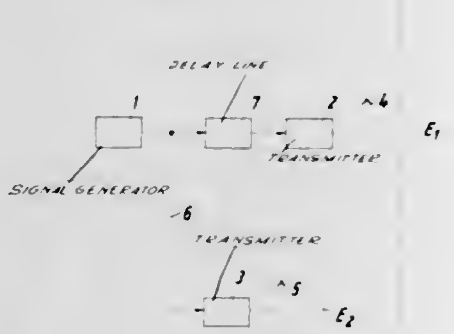

1. A system operating on the transit time principle for determining both the distance which a positional plane F_P, containing a point P whose position is to be determined, is spaced from the plane of symmetry F_S of two fixed points E_1 and E_2 which themselves are spaced a known distance from each other, as well as the particular side of the plane of symmetry on which the positional plane is located, said system comprising, in combination:

(a) means for modulating signals of the same frequency and of the same phase onto carriers of different frequency and transmitting the thus modulated carriers from said fixed points, respectively;
(b) means for producing at point P a reference signal having the same frequency as said signals, the phase of which reference signal is the same as the phase of the signals transmitted from said fixed points at the instant they are transmitted;
(c) means for receiving and demodulating at P the signals transmitted from said fixed points, and for determining as a first phase difference the phase difference between the two received and demodulated signals;
(d) means for amplifying the demodulated signals to approximately equal amplitudes, for producing a sum signal from the thus amplified signals, and for determining as a second phase difference the phase difference between said sum signal and said reference signal; and
(e) means for multiplying said first and second phase differences.

3,398,269
POLYCHROMATIC OPTICAL CORRELATOR
Ross E. Williams, Yonkers, N.Y., assignor to the United States of America
Filed May 7, 1964, Ser. No. 365,848
15 Claims. (Cl. 235—181)

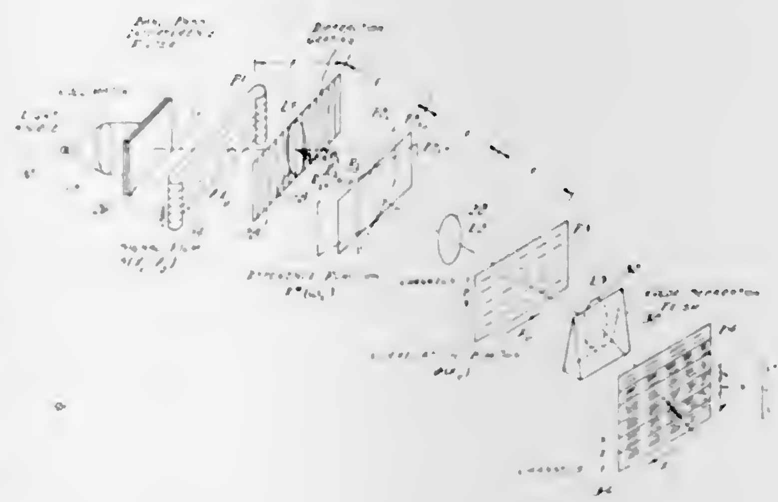

Panchromatic optical correlator provides optical means for correlating simultaneously a set of signal functions against all possible Doppler-distorted variations of a reference without mechanical motions or sequential Doppler processing.

3,398,270
LIGHTING FIXTURE
Henrik, A. J. de Vos, Wenham, and Miklos Gy Toth, Peabody, Mass., assignors to Sylvania Electric Products Inc., a corporation of Delaware
Filed July 15, 1966, Ser. No. 565,540
2 Claims. (Cl. 240—3)

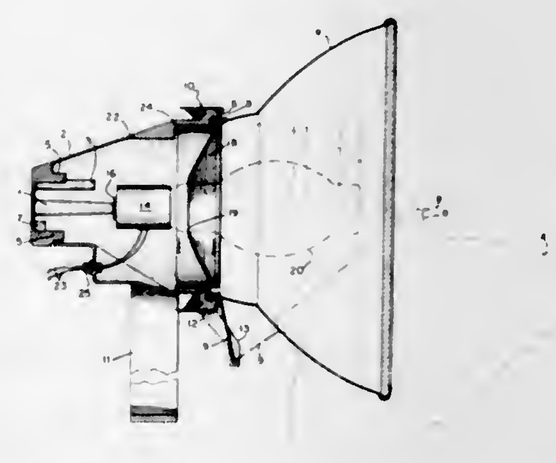

A lighting fixture in which the housing has an offset hinge for supporting different reflectors and providing clearance for lamps of different lengths and in which the housing has alternative mounting positions for supporting a lamp socket therein.

3,398,271
BATTERY HOLDING ARRANGEMENT FOR A LAMP
Saburo Sakamoto, 37 3-chome Higashi-Shinagawa, Shinagawa-ku, Tokyo, Japan
Filed Dec. 7, 1966, Ser. No. 599,765
Claims priority, application Japan, Apr. 30, 1966, 41/27,135
4 Claims. (Cl. 240—10.63)

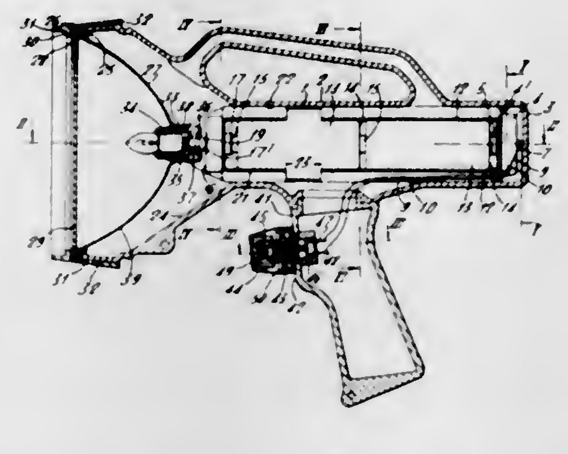

A waterproof flashlight having an inner housing closely fitted within an outer-casing. Spring contacts engage batteries to provide a tight electrical connection in order to prevent movement of the batteries within the casing.

3,398,272
ISORADIANT ENERGY REFLECTING
William B. Elmer, Thornton, N.H. (113 Pinckney St., Boston, Mass. 02114)
Filed Dec. 3, 1965, Ser. No. 512,042
8 Claims. (Cl. 240—41.35)

Non-spherical reflecting surfaces differ slightly from spheroidal and hyperboloidal so that each point on the surface facing a focal point located on the axis of the reflector is oriented so that rays incident from the focal point upon each point of the reflecting surface emerge from the reflecting surface to define a bundle of non-parallel rays forming a beam of substantially uniform intensity in response to an isoradiant energy source at the radiant energy center corresponding essentially to the focal point of the reflecting surface.

3,398,273
LUMINAIRE WITH OPTICAL REFRACTING MEMBERS
Charles H. Rex, Hendersonville, N.C., and Marvin L. Brom, Blacksburg, Va., assignors to General Electric Company, a corporation of New York
Filed Sept. 1, 1961, Ser. No. 135,659
5 Claims. (Cl. 240—93)

1. In a luminaire, a light source and a light-refracting member arranged to transmit light from said source, said member having on the inner surface thereof upon which light from said source is incident, a plurality of adjacent longitudinal converging lenses for causing incident light rays to converge within said member, the outer surface of the member having thereon a plurality of longitudinal prisms having angularly disposed reflecting and emitting faces, one of said prisms being associated with each one of said lenses, the lenses each causing incident rays from said source to converge within the member and strike the reflecting face of the associated prism at an angle of incidence greater than the critical angle so as to totally reflect the rays through the emit-

ting face of the prism in avoidance of the next adjacent prism, each of said lenses being oriented so that its principal axis is in alignment with the center of said light source, and the size of each lens being so small relative to its distance from the light source that rays incident thereon from the center of said source are generally parallel to the principal axis of the lens.

3,398,274
OPTICALLY ROUND, MECHANICALLY OVATE REFLECTOR WITH RADIALLY STEPPED SECTIONS
Charles H. Rex, Hendersonville, N.C., assignor to General Electric Company, a corporation of New York
Continuation-in-part of application Ser. No. 135,659, Sept. 1, 1961. This application July 26, 1965, Ser. No. 474,846
5 Claims. (Cl. 240—103)
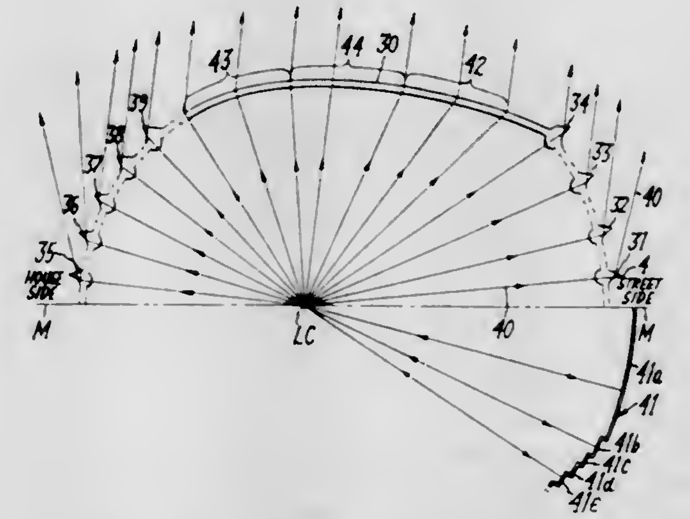
1. A reflector having a concave reflecting surface with an edge defining an opening for the emission of light from said reflector, said reflecting surface comprising a plurality of surfaces of revolution about a common directrix passing through said opening, said surfaces of revolution intersecting at least one plane perpendicular to said directrix so as to form a plurality of arcs of circles having differing radii and having a common center at the intersection of

said directrix with said plane perpendicular thereto, said arcs forming together a generally non-circular configuration.

3,398,275
SIGNALING LOOP INCLUDING UNBROKEN RAILROAD TRACK
Fred L. Hatke, Skillman, and George W. Gray, Lambertville, N.J., assignors to Radio Corporation of America, a corporation of Delaware
Filed Mar. 19, 1965, Ser. No. 441,089
1 Claim. (Cl. 246—34)

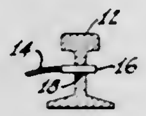

1. A signaling and vehicle detecting loop system comprising
 a pair of rails,
 a pair of spaced connectors connecting said rails and extending substantially perpendicularly thereto,
 a utilization device having terminals, and
 a pair of leads, each lead being connected between a point on a respective rail that is between said pair of spaced connections and that is closer to one of said connectors than to the other thereof and a respective terminal of said utilization device.

3,398,276
MARSHALLING YARD APPARATUS
René Edouard Dine, 20 Blvd. Diderat, 75 Paris 12eme, France
Filed May 27, 1965, Ser. No. 459,388
Claims priority, application France, May 28, 1964, 976,153
15 Claims. (Cl. 246—182)

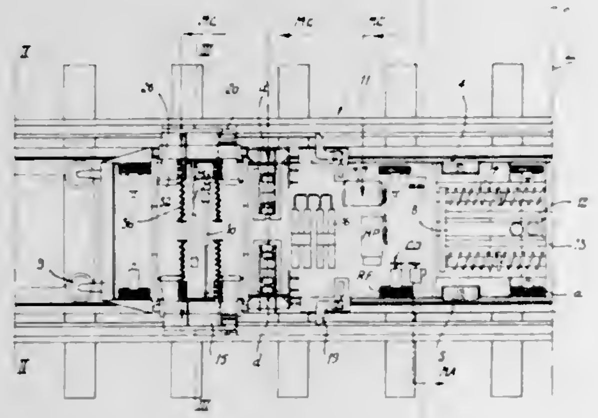

Apparatus for slowing railway rolling stock to a predetermined speed comprises a low carriage that runs on auxiliary rails between the standard rails. Arms mounted on the carriage are oppositely laterally outwardly extensible and retractable over the standard rails, for engagement by the wheels of the truck to be slowed. Upon the approach of the truck, the carriage is driven in the same direction, after which the truck wheels contact the laterally extensible members to propel the carriage with the truck. The carriage then applies brakes to its auxiliary rails to slow both the carriage and the truck to a predetermined speed, after which the laterally extensible members are retracted to permit the truck to continue at that low speed. The carriage brake is released and its drive reversed, and the carriage automatically returns to a position to engage the next truck.

3,398,277
ELECTRO-OPTICAL ALTIMETER
Dwight L. Randall, 312 N. Edison St., Arlington, Va. 22203
Filed Nov. 30, 1965, Ser. No. 510,707
7 Claims. (Cl. 250—43.5)

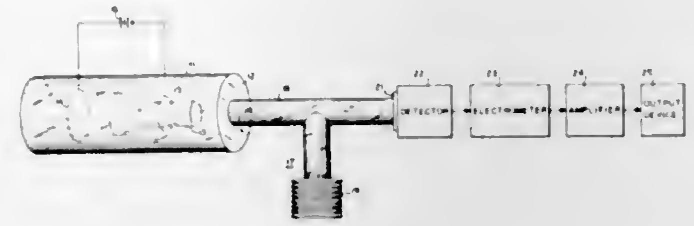

An altimeter in which ultraviolet light is directed through a closed chamber, the volume of which varies with altitude. The closed chamber is filled with a gas which absorbs ultraviolet light in an amount proportional to gas density. Since the density of the gas varies as the chamber volume varies with altitude, detection and measurement of the ultraviolet light emerging from the chamber is indicative of altitude.

3,398,278
NEUTRON DETECTOR FOR MEASURING DOSE RATE
William F. Splichal, Jr., North Augusta, S.C., assignor to the United States of America as represented by the United States Atomic Energy Commission
Filed Nov. 19, 1965, Ser. No. 508,872
10 Claims. (Cl. 250—71.5)

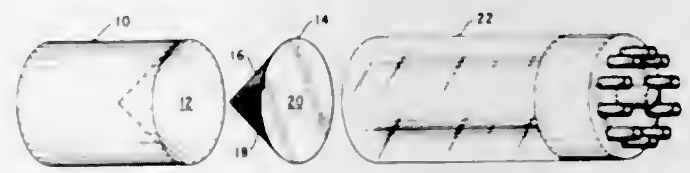

A neutron detector for neutron dose measurement. A cylindrical mass of neutron moderator material has a generally conical cavity in contact with a scintillation material and in mating relationship with a generally conical light pipe. The light pipe base is in contact with a photomultiplier tube and a suitable photomultiplier circuit. The conical cavity shape is such that a higher proportion of fastener entering neutrons are permitted to reach the vicinity of the scintillation material with sufficient energy to produce a quantity of recoil protons proportional to equivalent neutron dose in tissue.

3,398,279
RADIOMETER HAVING A WIDE RANGE OF SPECTRAL RESPONSE
Percival T. Gates, Jr., Weston, Mass., assignor to EG & G, Inc., a corporation of Massachusetts
Filed Dec. 1, 1964, Ser. No. 415,098
13 Claims. (Cl. 250—83.3)

Radiometer including a radiation detector that produces an electric current related to the level of radiation incident thereon; an amplifier capable of maintaining its input terminal substantially at zero potential; circuits connecting the radiation detector to the input of the amplifier; feedback system connected between the input and the output of the amplifier including a plurality of resistors and capacitors; switching means adapted to select the desired resistors and/or capacitors as the operational feedback circuit between the input and the output of the amplifier; ambient radiation compensation means connected to the input of the amplifier and adapted to compensate for the level of ambient radiation; a calibrated indicator and associated circuitry connected to monitor the current in the feedback element which is proportional to the in-
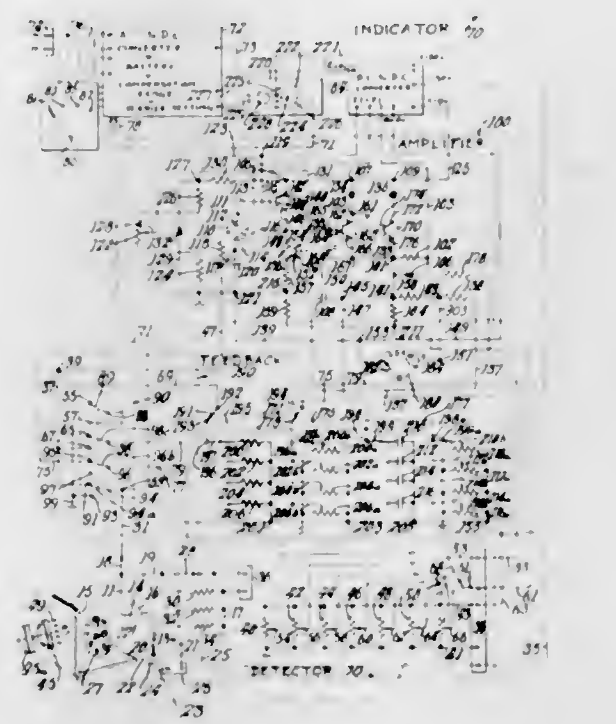
tensity of the incident radiation being measured; and a plurality of trimming potentiometers including switching circuits adapted to apply trimming potentials to the indicator to compensate for inexactness in the values of the resistors and capacitors.

3,398,280
METHOD AND APPARATUS FOR DETERMINING COOLING AGE OF NUCLEAR REACTOR FUEL
Homer A. Moulthrop, Richland, Wash., assignor to the United States of America as represented by the United States Atomic Energy Commission
Filed Dec. 14, 1965, Ser. No. 513,861
12 Claims. (Cl. 250—83.3)

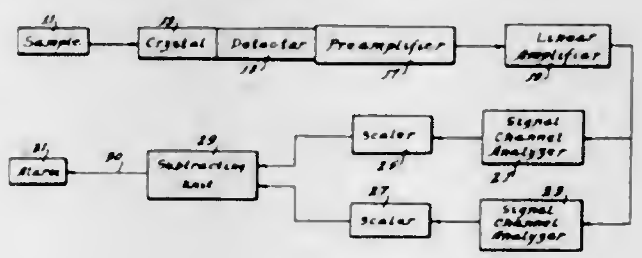

1. An apparatus for determining the cooling age of irradiated nuclear reactor fuel, comprising: means for detecting gamma rays emitted by the irradiated nuclear fuel and for producing pulses corresponding in amplitude to the energy of such rays; a first single-channel analyzer connected to said detecting means, said first analyzer being set to respond only to pulses of an amplitude corresponding to the gamma energy of an isotope decaying with a known relatively long half-life; a second single-channel analyzer connected to said detecting means, said second analyzer being set to respond only to pulses of an amplitude corresponding to the gamma energy of an isotope decaying with a known relatively short half-life; means for converting the output of the first analyzer into a corresponding first signal representative of the repetition rate of pulses in said output; means for converting the output of the second analyzer into a corresponding second signal representative of the repetition rate of pulses in said output; and means for providing a physical measure of the relationship between the magnitude of said repetition rates.

3,398,281
DIRECT READING, WAVELENGTH INDEPENDENT RADIOMETER EMPLOYING A PYROELECTRIC CRYSTAL DETECTOR
Richard W. Treharne, Zenia, and Charlton K. McKibben, Dayton, Ohio, assignors to Charles F. Kettering Foundation, Yellow Springs, Ohio, a corporation of Ohio
Filed Dec. 27, 1966, Ser. No. 604,976
10 Claims. (Cl. 250—83.3)

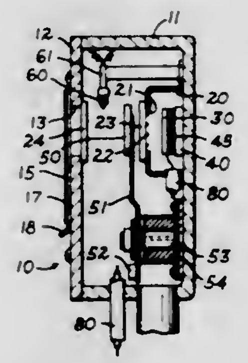

A lead zirconium titanate crystal possessing pyroelectric characteristics is employed in a direct reading, wavelength independent radiometer measuring directly the instantaneous radiant power of ultra-violet, visible and infrared light. The pyroelectric crystal is provided on two opposing surfaces with an electrically conductive material and a black body absorber is coated on the surface exposed to the incident radiation to convert that radiation into heat thereby polarizing the pyroelectric crystal and developing an electrical voltage related to the intensity of the radiation. A low inertia oscillating vane interrupts the incident radiation to provide a continuous voltage output from the crystal and filtering and gating circuits are included in the electronic readout circuit to minimize piezoelectric voltages which may be generated by mechanical forces transmitted to the crystal.

3,398,282
RADIATION DETECTOR WHOSE OUTPUT IS INDEPENDENT OF THE ENERGY DISTRIBUTION OF INCIDENT RADIATION
Rolf Hosemann, Schorlemmerstrasse 6a, Berlin-Dahlem, Germany, and Harald Warrikhoff, Spessartstrasse 9, Berlin-Wilmersdorf, Germany
Filed Dec. 1, 1964, Ser. No. 415,129
36 Claims. (Cl. 250—83.6)

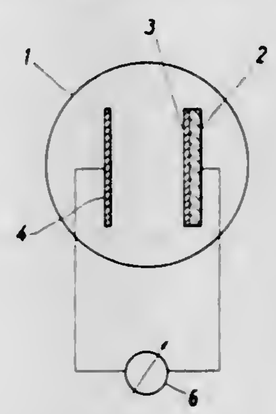

A detector electrode structure composed of two electrodes at least one of which consists of a plurality of layers each made of a material and having a thickness

such that the radiation responsive charge carrier emission characteristics of the layers combine to cause the net flow of charge carriers between the electrodes to be independent of the energy distribution of the incident radiation.

3,398,283
LINE FOLLOWER HAVING ASYMMETRICAL SCANNING PATTERN AND MEANS FOR INVERTING THE SCANNING DISPLAY

Kenneth V. Diprose, Westbury-on-Trym, Bristol, England, assignor to Hancock & Co. (Engineers) Limited, Croydon, England, a British company
Filed July 13, 1965, Ser. No. 471,681
Claims priority, application Great Britain, July 22, 1964, 29,602/64
7 Claims. (Cl. 250—202)

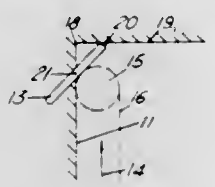

A photoelectric line follower producing a scanning pattern which is asymmetrical with respect to the outline to compensate for the asymmetrical placing of the tool (on one side) with respect to the outline, with an arrangement of movable reflecting surfaces in the path of the light rays forming the display which may be placed in one position when the tool is placed to one side with respect to the outline and moved to another position to invert the scanning display with respect to the outline when the tool is placed to the other side with respect to the outline.

3,398,284
SCAN TECHNIQUE FOR VIDICON TRACKER

Vitie J. Stakun, Pepperell, Mass., assignor, by mesne assignments, to the United States of America as represented by the Secretary of the Navy
Filed Feb. 25, 1965, Ser. No. 435,389
4 Claims. (Cl. 250—203)

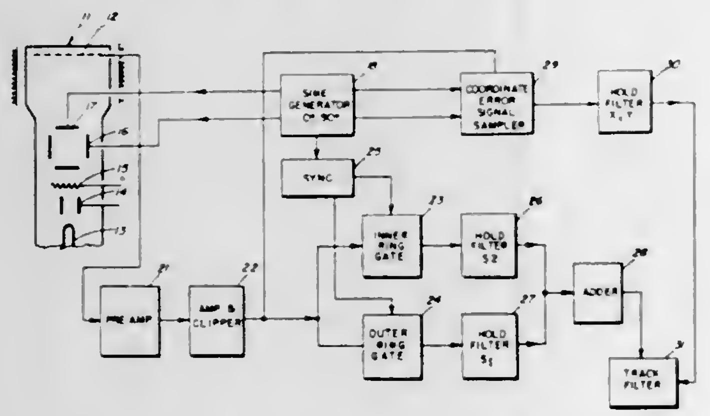

1. A system for deriving the polar coordinates of an infrared target as represented by an image on a vidicon photoconductive plate, comprising:
- means for generating a double circular scan of the electron beam of the vidicon;
- means for detecting an image received by the vidicon when the image is scanned by the electron beam and for deriving a vidicon output signal representing the intensity of said image;
- comparison means connected to said detecting means for separating successive vidicon output signals, for retaining the separated vidicon output signals, and for determining a difference output signal between said separated vidicon output signals,
- said difference output signal being an indication of the amount of radial error of the target,
- synchronizing means initiated by said generating means for gating said comparison means for effecting the separating of successive vidicon output signals, and
- coordinate error signal means connected to said generating means and said detecting means for determining the quadrant position of the image and for deriving the azimuth and range of the target.

3,398,285
SPECTRO-RADIOMETER WITH MEANS FOR ELIMINATING BACKGROUND NOISE

Harold L. Sachs, White Plains, N.Y., assignor to The Perkin-Elmer Corporation, Norwalk, Conn., a corporation of New York
Filed Oct. 16, 1961, Ser. No. 145,299
8 Claims. (Cl. 250—217)

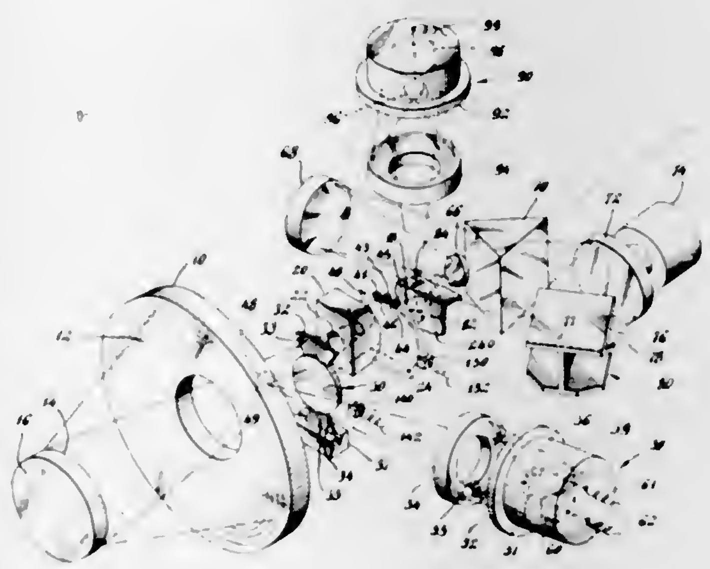

1. A radiometer comprising means for collecting radiation from a target; a first reference radiator; a second reference radiator; means for maintaining a known differential between the temperature of said first and said second reference radiators; a radiation sensitive detector capable of generating a signal which is a function of the intensity of the radiation falling thereon; and high speed alternating means for automatically sequentially directing onto said detector during three distinct time intervals, in some sequential order, collected radiation from said target, radiation from said first reference radiator, and radiation from said second reference radiator, said radiation sensitive detector thereby producing at least a first detector signal which is a function of the difference between the radiation intensity of said target and the radiation intensity of one of said reference radiators and a second detector signal which is the same function of the difference in the radiation intensities of said first and second reference radiators, caused by said known temperature differential.

3,398,286
RADIATION SENSITIVE EVAPORATIVE ANALYZER

Douglas Lyons Ford, Waverly, near Sydney, New South Wales, and William Walter Kennard, Eastwood, near Sydney, New South Wales, Australia, assignors, by mesne assignments, to Union Carbide Corporation, a corporation of New York
Filed July 17, 1964, Ser. No. 383,430
Claims priority, application Australia, July 24, 1963, 33,406/63
12 Claims. (Cl. 250—218)

An analytical instrument for continuously measuring percent by volume concentration of non-volatile solute liquid suspended or dissolved in volatile solvent liquids. Liquid to be analyzed is atomized into a fog, passed to an evaporation zone, heated to drive off the volatile constituents and monitored with scattered light. The density of the fog, which is proportional to non-volatile constituent concentration, attenuates the amount of light (from a constant light source) impinging on a photocell which

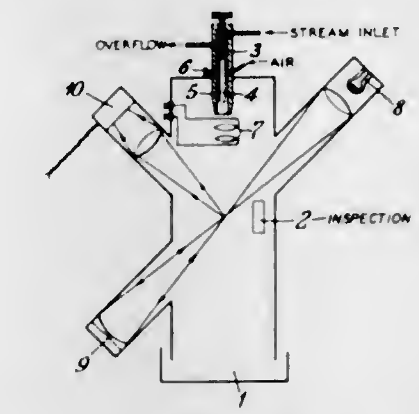

produces signals having amplitudes proportional to and representative of nonvolatile concentrations of interest. Signals from the photocell may be continuously recorded on a strip chart.

3,398,287
RADIATION SENSITIVE GEOPHYSICAL STRAIN MEASURING APPARATUS

Reuben S. Krogstad and Victor Vali, Seattle, Wash., and Walter Vali, State Line, Nev.; said Krogstad and said Victor Vali assignors to The Boeing Company, Seattle, Wash., a corporation of Delaware
Filed Feb. 15, 1965, Ser. No. 432,628
5 Claims. (Cl. 250—220)

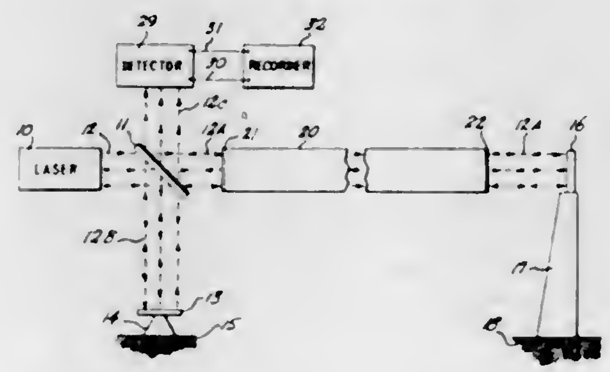

An improved method and apparatus for detecting and measuring small movements in the crust of and/or substrata of the earth are disclosed. First and second beams of radiation energy provided by one or more lasers are derived from two points on the earth and are combined to form a third beam having interference fringes therein. Any relative movement between the two points then causes a shift in the fringe pattern, thereby providing information regarding relative movement between the two points. A laser interferometer is disclosed for providing the mentioned beams. A constant density tube is preferably used in one leg of the system.

3,398,288
VELOCITY SELECTOR USING LIGHT CONDUCTING RODS AND A PLURALITY OF LIGHT BEAM INTERRUPTERS

Warren M. Sanders and Elvin W. Melton, Alamogordo, N. Mex., assignors to the United States of America as represented by the Secretary of the Air Force
Filed Feb. 16, 1965, Ser. No. 433,237
5 Claims. (Cl. 250—222)

A time and distance measuring system having a light source positioned on a moving object and fiber optic light conducting means operating to direct a beam from the light source to a remotely located slipper and back to a sensing means at the light source. A plurality of fixedly positioned spaced interrupters operate to intermittently block the light beam as the object moves along a fixed path, the time intervals between interruptions being meas-

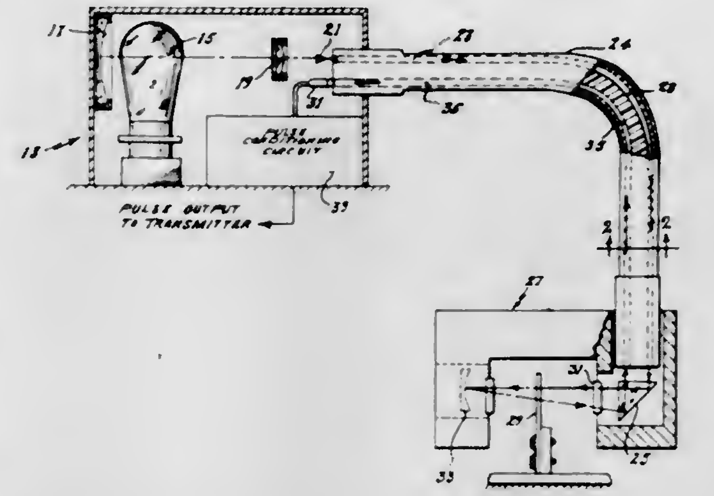

urable to indicate the time rate of change of velocity of the object.

3,398,289
COMMUNICATION SYSTEM UTILIZING PHOTOSENSITIVE ARRAYS

Arthur Edward Brewster, Aldwych, London, England, assignor to International Standard Electric Corporation, New York, N.Y., a corporation of Delaware
Filed Mar. 18, 1965, Ser. No. 440,838
Claims priority, application Great Britain, Apr. 6, 1964, 14,004/64
10 Claims. (Cl. 250—238)

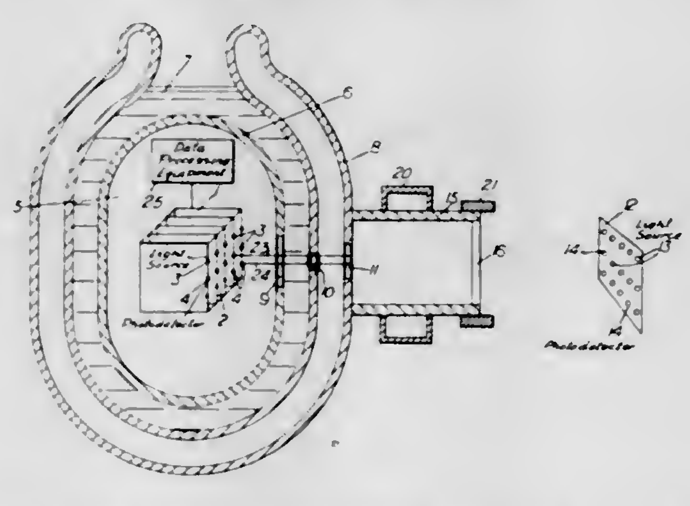

Apparatus for communicating with low temperature data processing equipment within a cryogenic container, including at least one pair of two dimensional arrays composed of light emitting sources and photodetecting devices, one array being outside the cryogenic container and connected to external equipment, the other array being inside the cryogenic container and connected to the data processing equipment, the arrays being located in parallel planes and having complementary patterns, and focusing means situated on an optical path into the container whereby the light emitting sources in one array are focused on to corresponding photodetectors on the other array.

3,398,290
PHOTOELECTRIC WALL SWITCH WITH MEANS TO ILLUMINATE THE OPERATING SURFACE

Carl J. Basehore, 89 W. Cypress, Phoenix, Ariz. 85003, and Larry J. Webb, 10640 N. 82nd Place, Scottsdale, Ariz. 85251
Filed Apr. 2, 1965, Ser. No. 444,982
5 Claims. (Cl. 250—239)

A wall switch utilizing a light source directing light through a prism parallel to an operating surface and subsequently onto a radiation detector. The light is also di-

rected through the edge of a radiation scattering material forming the operating surface; the radiation scattering ma-

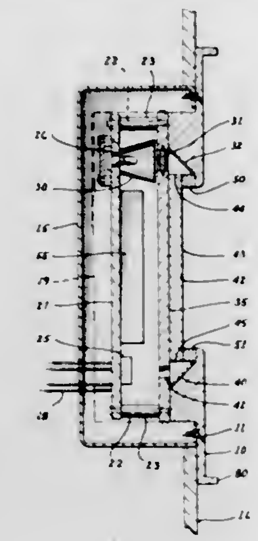

terial therefore provides scattered radiation for identifying the switch in the dark and the parallel-directed radiation may be utilized to operate a circuit when interrupted.

3,398,291
LUMINAIRE WITH HEAT SHIELD AND SUPPORT MEANS FOR THE PHOTOELECTRIC CONTROL DEVICE
Robert W. Zerfoss, Hendersonville, N.C., assignor to General Electric Company, a corporation of New York
Filed Mar. 24, 1966, Ser. No. 537,156
11 Claims. (Cl. 250—239)

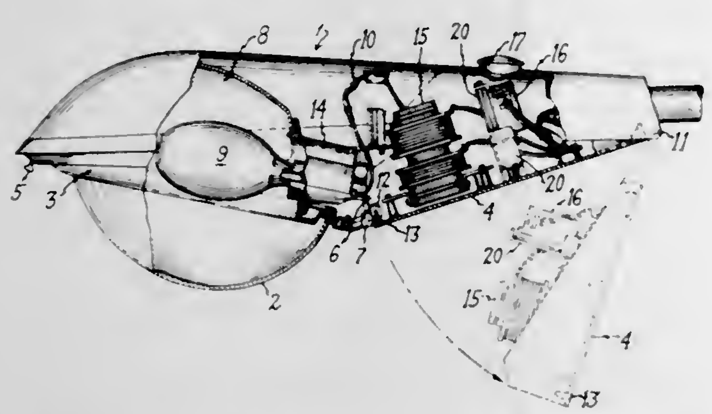

1. In a luminaire, housing means having a wall portion formed with a window opening, operating means within said housing means which generate elevated temperatures during operation, a photoelectric control device in said housing means for controlling the operation of the luminaire in accordance with light received through said window opening and being subject to adverse effects from elevated temperatures, and combined heat shield and support means interposed between said heat generating operating means and said photoelectric control device for protecting the latter from the elevated temperatures generated by said operating means and for mounting the same in operative position relative to said window opening.

3,398,292
CURRENT SUPPLY APPARATUS
Richard E. Kuba, Columbus, Ohio, assignor to North Electric Company, Galion, Ohio, a corporation of Ohio
Filed July 19, 1965, Ser. No. 472,826
14 Claims. (Cl. 307—51)

6. In a current supply apparatus for providing an uninterrupted alternating current supply to a load comprising core means, a first primary winding of said core means, a first input means for connecting said first primary winding to a first alternating current source, a second primary winding on said core means, a second input means for connecting said second primary winding to a second alternating current source, a secondary winding on said core disposed between said first and second

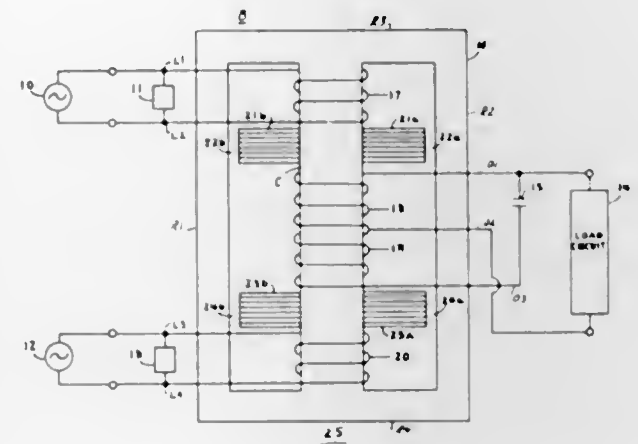

primary windings, magnetic shunt means located between said secondary winding and said first and second primary windings, capacitor means, means connecting said capacitor means across at least a portion of said secondary winding, and means connecting said load across at least a portion of said secondary winding.

3,398,293
GATING CONTROL SYSTEM UTILIZING ELECTROPARAMETRIC OSCILLATION
Tameo Tanaka, Yahata-ku, Kitakyushu-shi, Japan, assignor to Kabushiki Kaisha Yaskawa Denki Seisakusho, Kitakyushu-shi, Japan, a joint-stock company of Japan
Filed Dec. 24, 1963, Ser. No. 333,029
Claims priority, application Japan, Dec. 29, 1962, 37/59,477; Feb. 9, 1963, 38/6,768; Mar. 1, 1963, 38/11,085; Mar. 2, 1963, 38/11,193; Mar. 6, 1963, 38/11,943; June 6, 1963, 38/29,672; Oct. 7, 1963, 38/52,448
11 Claims. (Cl. 307—88)

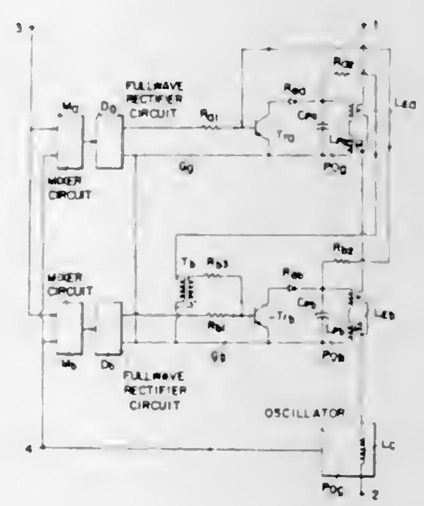

A gating control system utilizing a continuously exciting parametric oscillator as operational element. The phase state of the oscillation voltage is controlled at will to accomplish logical operations, due to the resonance of said element. The main circuit of, e.g., a transistor functions as an electronic valve. It is inserted in parallel with the oscillation circuit of the parametric oscillation and can so be controlled as to retain the phase of any oscillation voltage.

3,398,294
SOLID STATE STIMULATED RAMAN EFFECT AMPLIFYING SYSTEM
Eberhard Groschwitz, Munich, Germany, assignor to Siemens Aktiengesellschaft, a corporation of Germany
Filed Aug. 27, 1964, Ser. No. 393,012
Claims priority, application Germany, Aug. 30, 1963, S 87,019, S 87,020, S 87,021
32 Claims. (Cl. 307—88.3)

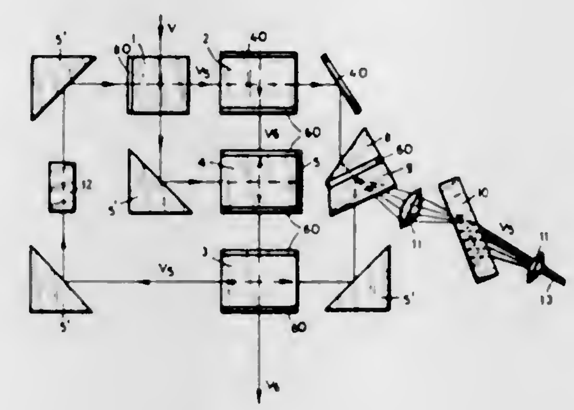

A system for stimulating emission of electromagnetic radiation comprises a number of resonant component systems. Each of the resonant component systems has an active crystal, preferably of semiconductor material, in which the natural quantum-mechanical oscillatory states of the crystal-lattice corpuscles are excited. The application of primary excitation, such as primary radiation, to each crystal produces combination frequencies whose magnitude corresponds to the sum or difference of primary frequency radiation and natural frequency. The combination radiation of one component system is applied as primary radiation to the next component system for producing therein a new combination radiation.

3,398,295
ELECTRONIC TIMER
George H. Fathauer, Decatur, Ill., assignor to Radson Engineering Corporation, Macon, Ill., a corporation of Illinois
Filed May 5, 1965, Ser. No. 453,346
11 Claims. (Cl. 307—141.4)

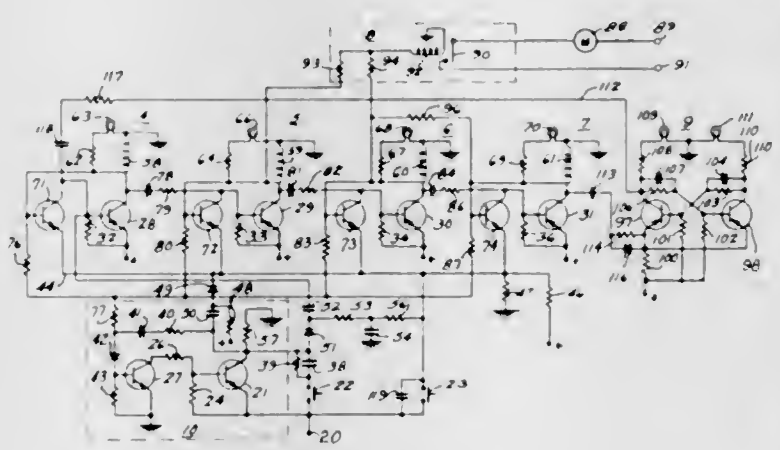

An electronic control circuit including a plurality of electronic switching stages connected in sequence with one another and having a transfer means coupled between the stages for transferring the operation of one stage to a succeeding stage. A common timing circuit is provided for each of the electronic switching stages and includes a timing element which when charged to a specific value causes the generation of a pulse for initiating the transfer of operation from a conducting stage to a succeeding non-conducting stage. This transfer is aided by the transfer means coupling the succeeding stage to the previous stage.

3,398,296
DIGITAL LOGIC INFORMATION SIGNAL DISTRIBUTOR FOR MULTICHANNEL TELECOMMUNICATION SYSTEMS WHICH PASS ONLY ONE SIGNAL AT A TIME
Luigi Sarati, Milan, and Giorgio Imbrighi, Rho, Milan, Italy, assignors to Società Italiana Telecomunicazioni Siemens S.p.A.
Filed May 8, 1964, Ser. No. 366,116
Claims priority, application Italy, May 10, 1963, 34,862/63
4 Claims. (Cl. 307—207)

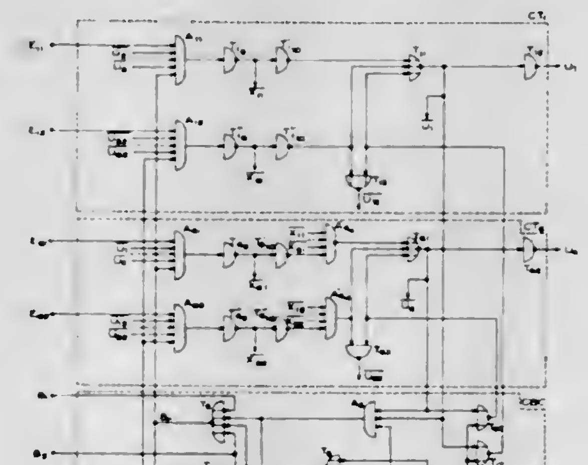

An information signal distributor suited to multichannel telecommunication systems with m routing channels and one reserve channel. The requirement of the reserve channel may be made for any one of the routing channels through a primary order or a secondary order signal depending on the gravity of the failure. When a few signals of primary and secondary order requiring the reserve channel arrive one after the other but then persist together, the information distributor lets pass only one signal by choosing the signal with regard to the arrival precedence and by giving the absolute precedence to the secondary order signal.

3,398,297
FREQUENCY CONVERTER USING LARGE SIGNAL SQUARE-LAW SEMICONDUCTOR
Tony Huen, Berkeley, Calif., assignor to the United States of America as represented by the United States Atomic Energy Commission
Filed July 8, 1965, Ser. No. 470,654
12 Claims. (Cl. 307—220)

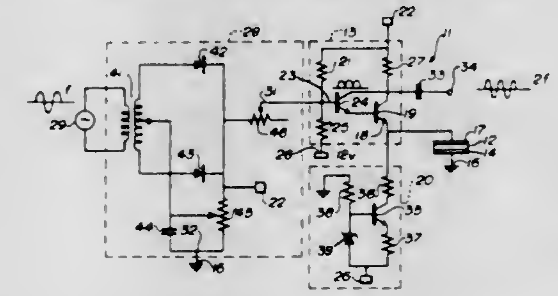

Large signal square-law cadmium sulphide crystal diode frequency conversion circuit in which a large signal square-law transformation between a full-wave rectified sinusoidal signal and a pure sinusoidal signal yields frequency multiplication or division.

3,398,298
TRANSISTORIZED SYNC STRIPPER
Leonard J. Baun, Cinnaminson, N.J., assignor to Radio Corporation of America, a corporation of Delaware
Filed Mar. 18, 1965, Ser. No. 440,732
8 Claims. (Cl. 307—235)

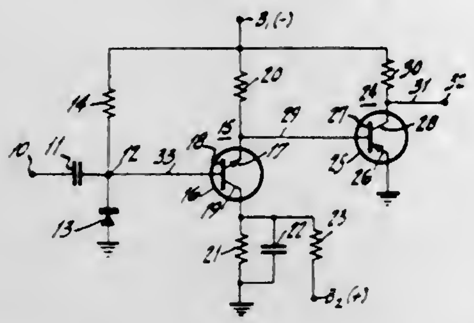

A transistorized sync stripper wherein a composite video signal is coupled via an emitter-follower transistor to an output switching transistor and wherein the synchronizing pulse peaks of the composite signal are clamped by a forward biased diode at the base of the emitter-follower.

3,398,299
CRYOTRON USING ANISOTROPIC FERROMAGNETIC FILM
Peter Albert Walker, Stevenage, Victor Andrew John Maller, Stotfold, and Peter Istvan Bonyhard, Stevenage, England, assignors to International Computers and Tabulators Limited
Filed July 23, 1964, Ser. No. 384,724
Claims priority, application Great Britain, July 25, 1963, 29,508/63, 29,509/63, 29,510/63, 29,511/63
7 Claims. (Cl. 307—245)

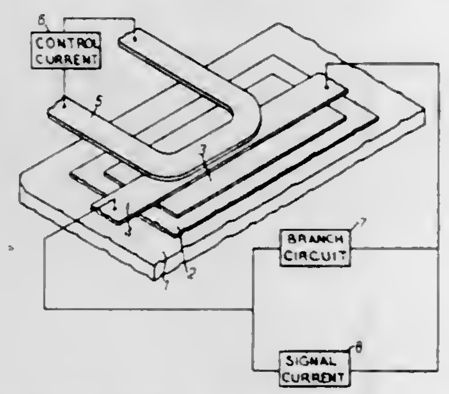

A cryogenic switching device includes a superconductive gate conductor, the inductance of which is switched between two values by a ferromagnetic element coupled to the gate conductor and which has one of two values of permeability in dependence upon the value of an applied magnetic field. The ferromagnetic element is preferably a thin anisotropic magnetic film having hard and easy axes of magnetization and the gate conductor is aligned with one or the other axis. The magnetic field is applied by a control conductor which may be parallel or perpendicular to the gate conductor.

3,398,300
GATED FLIP-FLOP EMPLOYING PLURAL TRANSISTORS AND PLURAL CAPACITORS COOPERATING TO MINIMIZE FLIP-FLOP RECOVERY TIME
Edwin K. C. Yu, Manville, N.J., assignor to Radio Corporation of America, a corporation of Delaware
Filed June 1, 1965, Ser. No. 460,168
13 Claims. (Cl. 307—247)

1. The combination comprising
a flip-flop circuit having a pair of output terminals,
a gating arrangement including first, second, third and fourth transistors each having a base, emitter and collector electrode,
first and second capacitors,
means for coupling the base electrode of said first transistor to one of said output terminals and the base electrode of said second transistor to the other of said output terminals,
means for coupling the base electrodes of said third and fourth transistors to said other and said one output terminals, respectively,
means for coupling the emitter electrode of said first transistor, the collector electrode of said third transistor and said first capacitor to said one output terminals,

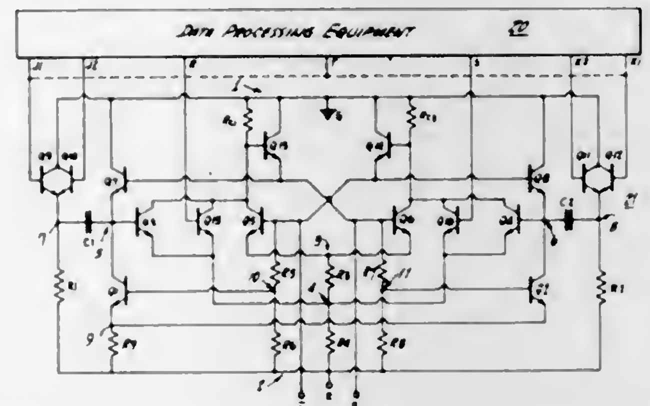

means for coupling the emitter electrode of said second transistor, the collector electrode of said fourth transistor, and said second capacitor to said other output terminal,
means for coupling the collector electrodes of said first and second transistors to a first circuit point, and
means for coupling the emitter electrodes of said third and fourth transistors to a second circuit point.

3,398,301
CARRIER PHASE SELECTION TYPE SEMICONDUCTOR DEVICE FOR OSCILLATION AND AMPLIFICATION OF MICROWAVES
Yoshihisa Suzuki, Nakano-ku, Tokyo-to, Japan, assignor to Kabushiki Kaisha Hitachi Seisakusho, Chiyoda-ku, Tokyo-to, Japan, a joint-stock company of Japan
Filed Mar. 8, 1965, Ser. No. 438,009
Claims priority, application Japan, Mar. 16, 1964, 39/14,379; July 14, 1964, 39/39,053
3 Claims. (Cl. 307—299)

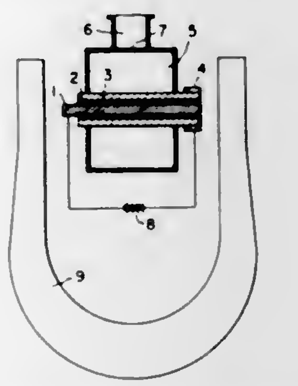

A carrier-phase selection type semiconductor device for oscillation and amplification of microwaves, comprising a rod-like base electrode, a thin-film semiconductor layer on the base electrode, a metal electrode on the semiconductor layer, a coaxial resonator encompassing the whole of the above members, and a magnet member forming a magnetic field in the direction transverse to the injection of electric carriers injected from the base electrode. The injected carriers are caused to undergo circular motion by the magnetic field and, in addition, are accelerated or decelerated by the electric field component of the electromagnetic field developing within the resonator, whereby the kinetic power of the carriers having predetermined phase states with respect to the electric field component are converted into radio frequency electromagnetic power.

3,398,302
ELECTRICAL IMPULSE GENERATOR
Hans-Dieter Harnau, Gevelsberg, and Günter Backstein, Hattingen (Ruhr), Germany, assignors to Essex Wire Corporation, Fort Wayne, Ind., a corporation of Michigan
Filed Oct. 13, 1965, Ser. No. 495,605
Claims priority, application Germany, Oct. 13, 1964, R 38,996
3 Claims. (Cl. 310—14)

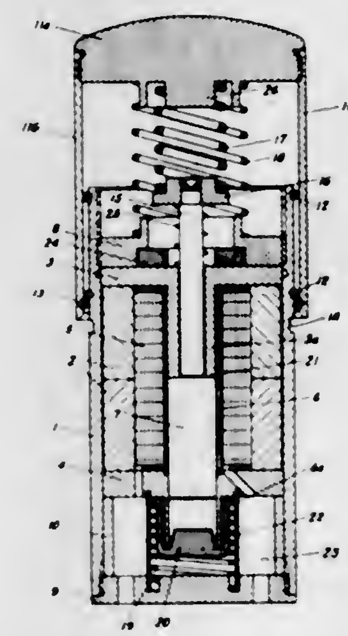

An electrical impulse generator in which a housing contains a magnetic support together with an induction coil in the support with a movable armature. An actuating cap fits over the housing and is moveable relative to the armature and an energy store is located in the cap.

3,398,303
PLURAL ARMATURE BIDIRECTIONAL STEPPER
Wilhelm Koch, Buxtehude, Germany, assignor to National Rejectors Inc., St. Louis, Mo., a corporation of Missouri
Filed Jan. 24, 1966, Ser. No. 522,513
7 Claims. (Cl. 310—22)

1. A stepping motor that comprises:
(a) a base,
(b) a shaft that is rotatably supported by said base,
(c) said shaft being rotatable in one direction relative to said base and also being rotatable in the opposite direction relative to said base,
(d) means biasing said shaft for rotation in said one direction relative to said base,
(e) a rotatable member that is mounted on, and that can rotate relative to, said rotatable shaft,
(f) an escapement wheel that is rotatable with said rotatable member,
(g) a ratchet wheel that is rotatable with said rotatable member,
(h) a pawl that is mounted adjacent said ratchet wheel and that prevents rotation of said ratchet wheel, and hence of said rotatable member and escapement wheel, in said one direction but that permits rotation of said ratchet wheel, and hence of said rotatable member and escapement wheel, in said opposite direction,
(i) a second pawl that is mounted adjacent said ratchet wheel,
(j) an electromagnetically-operated element that can be actuated to cause said second pawl to engage a tooth on said ratchet wheel and thereby rotate said ratchet wheel, and hence said rotatable member and escapement wheel, in said opposite direction relative to said base an angular distance substantially equal to the angular width of said tooth,
(k) the first said pawl yielding to permit said second pawl and said electromagnetically-operated element to rotate said ratchet wheel, and hence said rotatable member and escapement wheel, in said opposite direction, but thereafter returning to its normal position to block rotation of said ratchet wheel, and hence of said rotatable member and escapement wheel, in said one direction,
(l) a bracket that is secured to said shaft adjacent said escapement wheel and that rotates with said shaft,
(m) an escapement lever that is rotatably secured to said bracket and that rotates with said bracket and said shaft,
(n) one portion of said escapement lever normally being in engagement with said escapement wheel but being movable out of engagement with said escapement wheel as another portion of said escapment lever is moved into engagement with said escapement wheel,

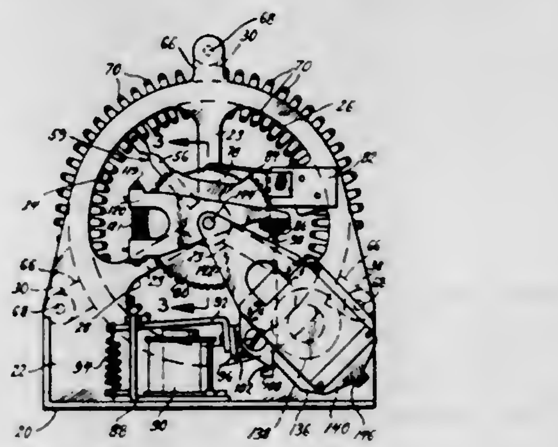

(o) said other portion of said escapement lever subsequently moving out of engagement with said escapement wheel as said one portion of said escapement wheel moves back into engagement with said escapement wheel,
(p) the movement of said one portion of said escapement lever out of engagement with said escapement wheel and the movement of said other portion of said escapement lever into engagement with said escapement wheel followed by the movement of said other portion of said escapement lever out of engagement with said escapement wheel and the movement of said one portion of said escapement lever back into engagement with said escapement wheel permitting said biasing means to move said escapement lever, and hence said bracket and shaft, in said one direction relative to said escapement wheel an angular distance substantially equal to the angular width of a tooth on said ratchet wheel,
(q) a second electromagnetically-operated element that can be seletcively actuated to move said escapement lever relative to said escapement wheel and thereby enable said biasing means to move said escapement lever, and hence said bracket and shaft, in said one direction relative to said escapement wheel an angular distance substantially equal to the angular width of a tooth on said ratchet wheel,
(r) said biasing means and said escapement lever and said bracket and said escapement wheel coacting to permit step-by-step rotation of said shaft in said one direction relative to said rotatable member and

to prevent rotation of said shaft in said opposite direction relative to said rotatable member,

(s) said bracket, said escapement lever and said escapement wheel normally holding said shaft and said rotatable member against relative rotation,

(t) whereby actuation of the first said electromagnetically-operated element will rotate said ratchet wheel and said rotatable member and said escapement wheel in said opposite direction relative to said base and will thereby normally rotate said shaft in said opposite direction relative to said base,

(u) the first said electromagnetically-operated element acting, whenever it is actuated, to move said ratchet wheel, and hence said rotatable member and said escapement wheel, in said opposite direction relative to said base an angular distance substantially equal to the angular width of a tooth on said ratchet wheel irrespective of any actuation of said second electromagnetically-operated element,

(v) said second electromagnetically-operated element acting, whenever it is actuated, to effect rotation of said escapement lever, and hence said bracket and shaft, in said one direction relative to said escapement wheel an angular distance substantially equal to the angular width of a tooth on said ratchet wheel irrespective of any actuation of the first said electromagnetically-operated element,

(w) whereby said stepping motor can respond to pulses applied to said electromagnetically-operated elements even where said pulses overlap in point of time,

(x) said shaft having the position thereof substantially unchanged when said electromagnetically-operated elements are actuated simultaneously.

3,398,304
ROTATING MACHINERY
Jeffery Gerald Heard and Peter Michael Joseph Davies, Stafford, England, assignors to The English Electric Company Limited, London, England, a British company
Filed Feb. 15, 1965, Ser. No. 432,743
Claims priority, application Great Britain, Feb. 28, 1964, 8,329/64
1 Claim. (Cl. 310—61)

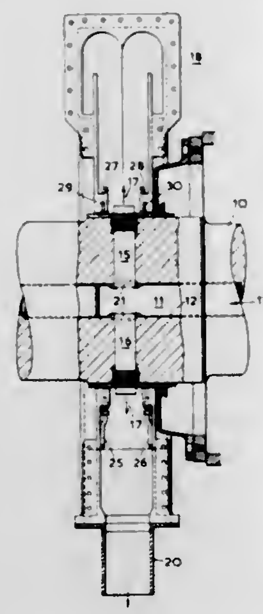

This invention relates to a dynamo electric machine in which a cooling liquid is pumped into and through the machine rotor to be exhausted through an outlet path which includes an axial duct and radial ducts in a shaft portion of the rotor. When the rotor is rotated, the radial ducts could pump liquid from the rotor at a greater rate than that at which it is being pumped into the rotor. The present invention discloses the use of restrictor means at the inner ends of the radial ducts which prevent these ducts from running full of liquid thereby to prevent them from having any pumping effect.

3,398,305
FLOWMETERS HAVING MAGNETIC FOLLOWER
Nathaniel Brewer, Newtown, Pa., assignor to Fischer & Porter Company, Warminster, Pa., a corporation of Pennsylvania
Filed Oct. 28, 1964, Ser. No. 407,107
4 Claims. (Cl. 310—104)

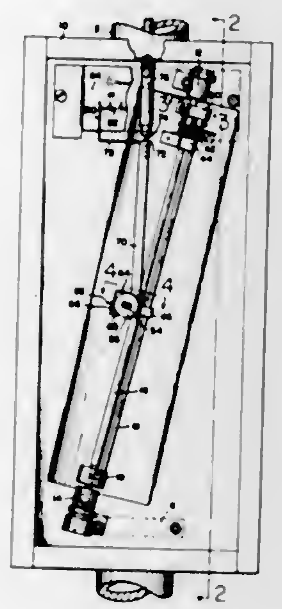

A variable area flowmeter, in which a float carrying a magnet is positioned in a flow tube according to the rate of flow of fluid in the tube, is provided with a magnetic follower element consisting of an elongated wire spaced from, and rotatable about an axis having a skew relationship with the axis of the flow tube. The elongated wire lies approximately in a common plane with its axis of rotation, but the wire is made from a readily permanently deformable material so that adjustments for linearity can be made by bending. A coupler transmits the motion of the follower to an indicator rotating about an axis parallel to the axis of the flow tube.

3,398,306
STATOR FRAME ASSEMBLY AND STRUCTURE
Glenn O. Merrick, Dayton, Gene L. Dafler, New Lebanon, and Roy C. Bodem, Kettering, Ohio, assignors to General Motors Corporation, Detroit, Mich., a corporation of Delaware
Filed Oct. 7, 1965, Ser. No. 493,770
7 Claims. (Cl. 310—258)

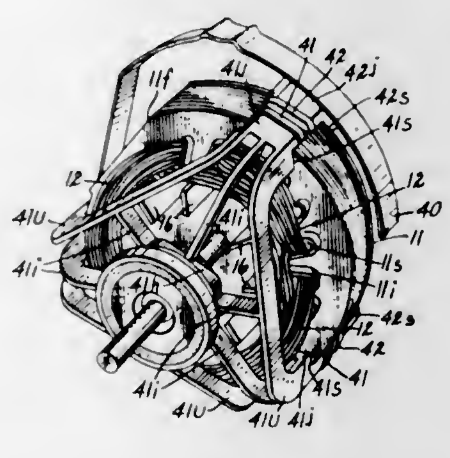

A stator frame assembly comprised of a pair of end frames, wherein, each frame is constructed of a plurality of stabilizing struts having predetermined junctures juxtaposed in locations radially outward on a magnetic core, and having open spaces for cooling between the struts. The end frames and magnetic core are secured together by a metal band complementary to the junctures and the periphery of the magnetic core.

3,398,307
ELECTRON BEAM X-RAY GENERATOR WITH ROTATABLE TARGET MOVABLE ALONG AXIS OF ROTATION
Lawrence E. Brown, Palo Alto, and Phillip T. Jones, Los Altos, Calif., assignors to Varian Associates, Palo Alto, Calif., a corporation of California
Original application May 28, 1962, Ser. No. 198,212, now Patent No. 3,331,978, dated July 18, 1967. Divided and this application Aug. 25, 1966, Ser. No. 600,282
4 Claims. (Cl. 313—60)

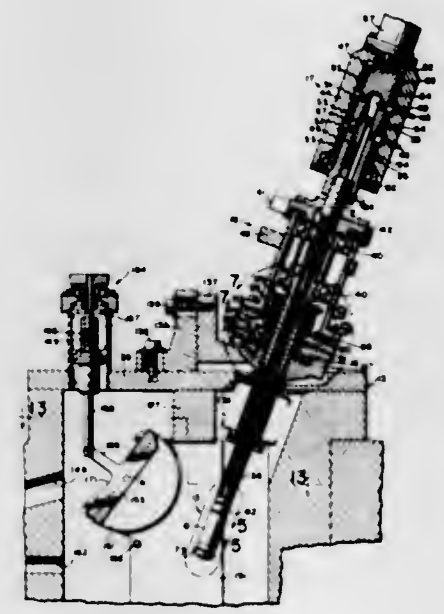

Improved X-ray apparatus is provided by incorporation of an X-ray target within a vacuum envelope and providing means for controlling the amount of beam cross-section which is intercepted by the target which permits a simple means of controlling X-ray spot size.

3,398,308
CYCLOTRON DEVICE INCLUDING DUMMY MAGNETIC COMPONENTS FOR IMPROVED MAGNETIC FIELD SYMMETRY
Karl Steimel, Konigstein-Johanniswald, Germany, assignor to Licentia Patent-Verwaltungs-G.m.b.H., Frankfurt am Main, Germany
Filed Nov. 19, 1965, Ser. No. 508,748
Claims priority, application Germany, Nov. 19, 1964, L 49,327
4 Claims. (Cl. 313—62)

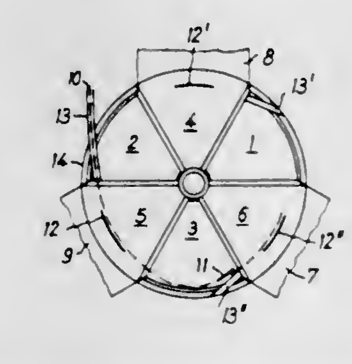

A device for improving the symmetry of the magnetic field to which particles are subjected during acceleration in a cyclotron, which cyclotron includes a particle extraction system having magnetic components disposed in a peripheral portion of the cyclotron magnetic field region, the device including several sets of dummy components equal in number to one less than the total number of cyclic variations of the composite magnetic field in the cyclotron, the magnetic components of the extraction system being disposed at a given point in a region defining one cycle of variation of the composite magnetic field and each set of dummy components being disposed at a corresponding point in a region defining a respective other cycle of the composite field.

3,398,309
POST-DEFLECTION-FOCUS CATHODE-RAY TUBE
Sam H. Kaplan, Chicago, Ill., assignor to The Rauland Corporation, Chicago, Ill., a corporation of Illinois
Filed Aug. 10, 1966, Ser. No. 571,533
9 Claims. (Cl. 313—85)

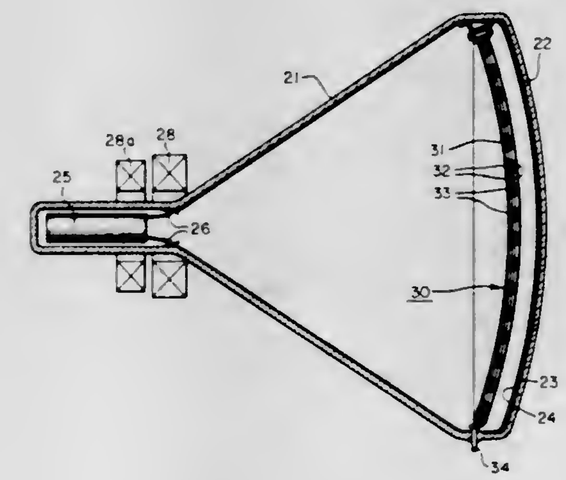

1. In a post deflection focus cathode ray tube having an envelope with a conical section luminating in an image screen at one end and having at least one electron gun at the opposite end for developing and directing an electron beam along a predetermined path and through a beam deflection region toward said image screen, the improvement which comprises:

a unitary electrode structure positioned across said beam path between said screen and said deflection region having a principal conductive member with a multiplicity of electron permeable portions and intervening electron impervious portions;

a pair of auxiliary conductive members superposed over but insulated from both faces of said electron impervious portions of said principal member;

means for applying operating potentials to said auxiliary members;

and means for applying a different operating potential to said principal member to form at each of said electron permeable portions a lens for focusing said beam on said screen.

3,398,310
INDIRECT ENERGY BAND GAP TOPOLOGY INJECTION ELECTROLUMINESCENCE SOURCE
Ted L. Larsen, Stanford, Robert J. Archer, Portola Valley, and Egon E. Loebner, Palo Alto, Calif., assignors to Hewlett-Packard Company, Palo Alto, Calif., a corporation of California
Filed Mar. 11, 1965, Ser. No. 438,949
7 Claims. (Cl. 313—108)

A P–N junction is formed in an alloy having an indirect

energy band gap topology to provide injection electroluminescence having a greater luminosity efficiency at

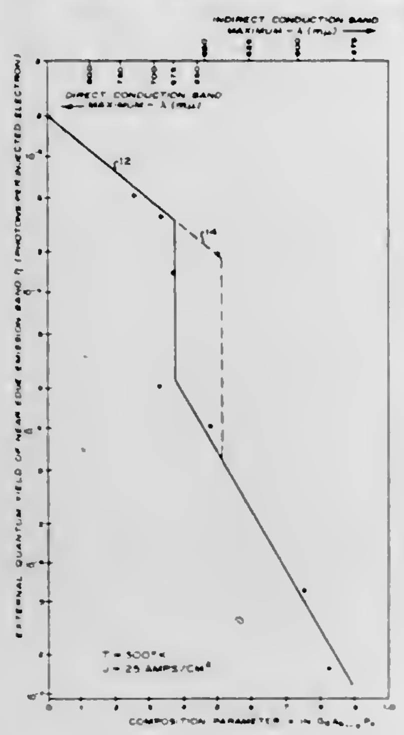

300° K. than is provided by any composition of the same alloy having a direct energy band gap topology.

3,398,311
ELECTROLUMINESCENT DEVICE
Derrick J. Page, Wilkinsburg, Pa., assignor to Westinghouse Electric Corporation, Pittsburgh, Pa., a corporation of Pennsylvania
Filed Dec. 29, 1965, Ser. No. 517,255
13 Claims. (Cl. 313—108)

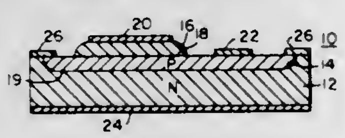

This invention relates to a light emitting transistor and illustratively includes in one embodiment an emitter region made of a material having a sufficient band gap to emit visible radiation, and a base and a collector region forming a p-n region therebetween. More specifically, the base region forms a heterojunction with the emitter region such that the energy level of the conduction band of the emitter region is greater than the energy level of the conduction band of the base region and further so that the energy level of the valence band of the emitter region is less at the junction than the energy level of the valence band of the base region. By so structuring the heterojunction formed between the emitter and base regions, the radiation emitting transistor may be operated to have a significant current flow therethrough and to allow electropositive holes to be injected from the base region into the emitter region for providing an efficient generation of radiation.

3,398,312
HIGH PRESSURE VAPOR DISCHARGE LAMP HAVING A FILL INCLUDING SODIUM IODIDE AND A FREE METAL
Charles R. Edris, Nutley, Hugh D. Fraser, Caldwell, and Melvin C. Unglert, Wyckoff, N.J., assignors to Westinghouse Electric Corporation, Pittsburgh, Pa., a corporation of Pennsylvania
Continuation-in-part of application Ser. No. 317,508, Oct. 21, 1963. This application Nov. 24, 1965, Ser. No. 516,200
7 Claims. (Cl. 313—225)

Mercury-metal iodide discharge lamp includes sodium iodide as a discharge-sustaining constituent and additional free metal, such as thallium, is also included as a part of the dosing charge. During operation of the device, free iodine, is released through reaction of sodium

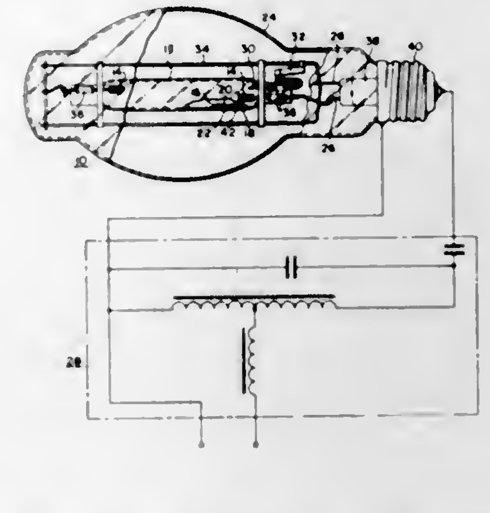

with the arc tube. This released free iodine reacts with the aditional free metal to prevent changes in lamp starting and operating characteristics, as well as to prevent color shifts.

3,398,313
TRAVELING WAVE TUBE WITH EXTERNAL HELICAL COUPLER POSITIONER
Edward J. Downey, Jr., Warren F. Bauder, and Herman W. Cramm, Manhattan Beach, Calif., assignors to the United States of America as represented by the Secretary of the Air Force
Filed Sept. 21, 1965, Ser. No. 489,088
4 Claims. (Cl. 315—3.5)

A traveling wave tube having a movable rod for positioning slidable helical couplers along the length of the tube while the tube is in use.

3,398,314
TRAVELING WAVE TUBE HAVING MEANS FOR REMOVING SLOW ELECTRONS FROM ELECTRON BEAM
Daniel C. Buck, Horseheads, N.Y., assignor to Westinghouse Electric Corporation, East Pittsburgh, Pa., a corporation of Pennsylvania
Filed Nov. 18, 1964, Ser. No. 412,055
2 Claims. (Cl. 315—3.5)

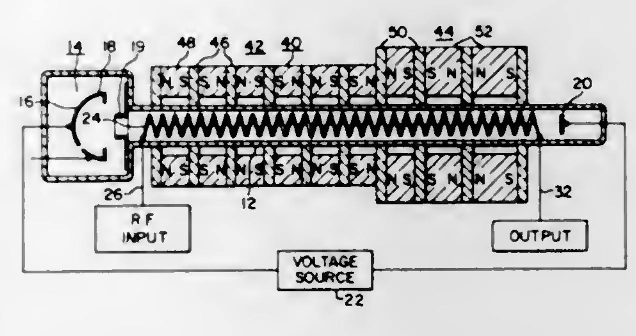

This invention relates to a traveling wave tube system in which periodic magnetic focusing is utilized and in which the low energy electrons which extract energy from the sole wave structure are removed from the electron beam by utilization of a period magnetic focusing arrangement operating within selected pass bands and/or selected portions of said pass bands of said periodic magnetic focusing system.

3,398,315
A TRAVELING WAVE TUBE WITH IMPROVED THERMAL AND MAGNETIC CIRCUITRY
George W. Washburn, Horseheads, N.Y., assignor to Westinghouse Electric Corporation, Pittsburgh, Pa., a corporation of Pennsylvania
Filed Aug. 19, 1965, Ser. No. 480,893
7 Claims. (Cl. 315—3.5)

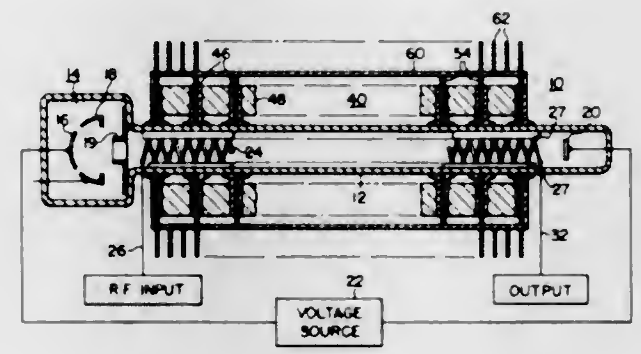

1. A traveling wave tube comprising an envelope, an electron gun positioned therein for generating and directing an electron beam along an extended beam path within said envelope, a series of pole pieces alternating with a series of axially polarized permanent magnets disposed about said envelope with like poles adjacent to each other, said pole pieces including a first portion of magnetic material for establishing with said magnets a periodic spatially alternating beam focusing magnetic field along said beam path, said pole pieces including a second portion of non-magnetic material of better thermal conducting properties than said magnetic material extending inwardly into thermal contact with said envelope and outwardly beyond said first portion of said pole pieces and a heat radiating means in thermal contact with said second portion of said pole pieces for establishing a heat conductive path from said envelope.

3,398,316
INFRARED IMAGING DEVICE WITH PHOTOCONDUCTIVE TARGET
George A. Morton and Robert J. Pressley, Princeton, and Stanley V. Forgue, Cranbury, N.J., assignors, by mesne assignments, to the United States of America as represented by the Secretary of the Army
Filed Aug. 4, 1955, Ser. No. 526,514
3 Claims. (Cl. 315—10)

1. An infrared pickup tube comprising an envelope including an elongated body portion having an axis and a pair of off-axis arms on one end of said body portion, said arms having axes which intersect the axis of the body portion at an angle, an infrared sensitive photoconductive target in the other end of said body portion, an electron gun positioned inside and adjacent the outer end of one of said arms at a point sufficiently remote from the intersection of the body portion and the arm that a straight line contained within the tube cannot interconnect the electron gun and the target because of the offset of the arm axis, said electron gun being positioned to emit an electron beam substantially along the axis of the arm containing the gun, an electron multiplier in the other of said arms, and means adjacent to the intersection of said body portion and said arms for bending the emitted electron beam from the axis of the arm containing the electron gun to the axis of the body portion for impingement on said target and for bending an electron beam reflected

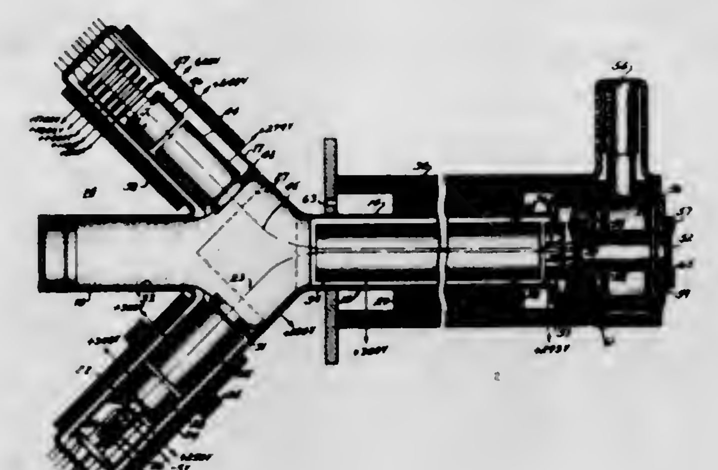

from said target along the axis of the body portion to the axis of the arm having the electron multiplier.

3,398,317
INFORMATION STORAGE TUBE
Kenneth R. Shoulders, Woodside, Calif., assignor to Stanford Research Institute, Menlo Park, Calif., a corporation of California
Filed Jan. 12, 1965, Ser. No. 424,956
7 Claims. (Cl. 315—12)

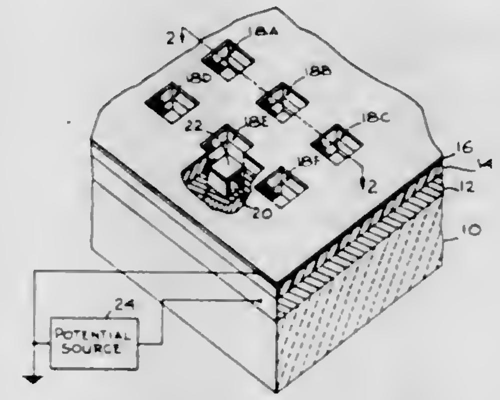

A data storage target is provided for use in an information storage tube wherein, an electron gun is at one end of the tube and a storage mosaic at the other end. The storage mosaic comprises a substrate which supports a metal layer on which a dielectric layer is placed. The second metal layer is placed on the dielectric layer. A plurality of spaced holes are provided each of which extends through the second metal layer, the dielectric layer and partially into the first metal layer. Within each hole there is provided a microcapacitor which comprises dielectric material on the exposed first metal layer on top of which a metal deposit is placed.

3,398,318
HORIZONTAL DEFLECTION LINEARITY CONTROL CIRCUIT
Lucas J. Bazin, Stratford, N.J., assignor to Radio Corporation of America, a corporation of Delaware
Filed Mar. 19, 1965, Ser. No. 441,254
4 Claims. (Cl. 315—27)

This circuit provides linear electromagnetic deflection of the scanning electron beam of a television camera image pickup tube. The pulsating deflection voltage wave applied

to the primary of the deflection output transformer, having the yoke coupled to the secondary, is integrated to form a sawtooth wave at a relatively low level. The sawtooth wave is amplified and added to the pulsating wave to provide the necessary linearizing component. In the amplifier a linearity potentiometer controls the peak-to-peak

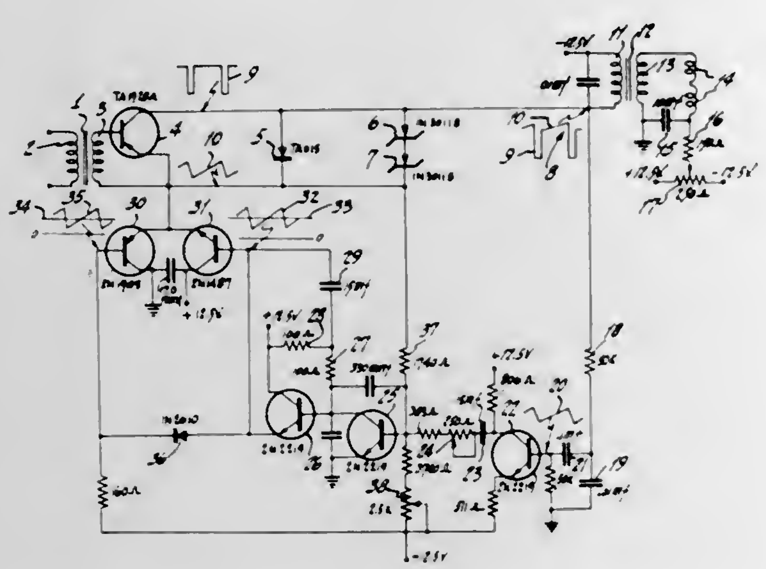

amplitude of the sawtooth wave for linearizing purposes. Also, the amplifier is biased by a size control potentiometer to vary the DC level of the sawtooth component of the deflection wave and, thus, the deflection amplitude. The linearity and size controls operate independent of one another with no interaction.

3,398,319
ENERGIZING SYSTEM FOR COLOR PURITY APPARATUS
Eugene Lemke and Neal W. Hursh, Indianapolis, Ind., assignors to Radio Corporation of America, a corporation of Delaware
Filed Dec. 14, 1965, Ser. No. 513,693
4 Claims. (Cl. 315—27)

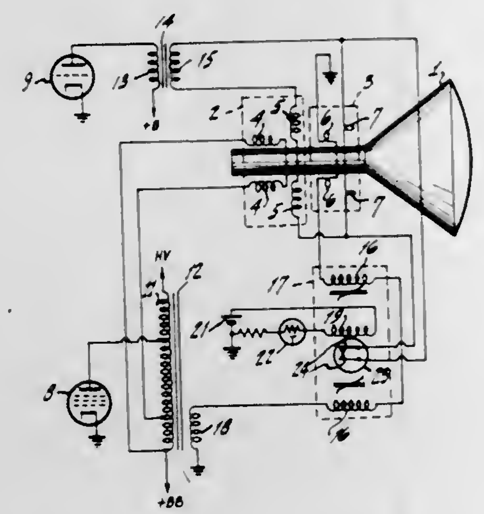

An auxiliary yoke having horizontal and vertical coils is controlled by apparatus including a saturable reactor having an A.C. winding and a D.C. winding. The horizontal coils of the auxiliary yoke are coupled to the horizontal deflection wave source through the A.C. reactor winding. As the temperature changes, the current in the D.C. winding is changed, causing the inductive reactance of the A.C. winding to change, thereby affecting the energization of the horizontal auxiliary deflection coils and the effective horizontal deflection center as a function of the temperature change and the horizontal deflection angle. The energization of the vertical coils of the auxiliary deflection yoke, and thereby the vertical deflection center, is changed as a function of the vertical deflection angle and by the operation of magnetic contacts responsive to the current in the reactor D.C. winding.

3,398,320
DYNAMIC COLOR PURITY APPARATUS
Neal W. Hursh, Indianapolis, Ind., assignor to Radio Corporation of America, a corporation of Delaware
Filed Dec. 14, 1965, Ser. No. 513,739
10 Claims. (Cl. 315—27)

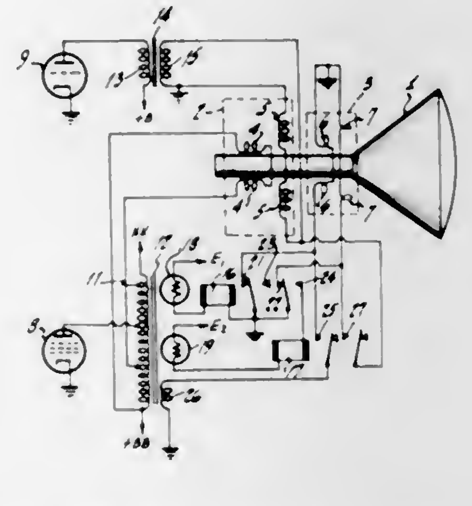

An auxiliary deflection system is provided to control wide-angle beam deflection. An auxiliary deflection yoke is inductively energized from the main deflection yoke to shift the deflection center of the main yoke in a first sense under normal temperatures. As the temperature rises, the inductive energization of the auxiliary yoke is interrupted. For still higher temperatures the auxiliary yoke is energized by the vertical and horizontal deflection wave sources to shift the deflection center of the main deflection yoke opposite to the first sense. The amount of the shift varies as a function of the beam deflection angle.

3,398,321
ALTERNATING ELECTRIC POWER GENERATOR
Edwin Langberg, Lexington, Mass., assignor to Avco Corporation, Cincinnati, Ohio, a corporation of Delaware
Continuation of application Ser. No. 152,230, Nov. 14, 1961. This application Mar. 31, 1965, Ser. No. 445,868
17 Claims. (Cl. 315—39)

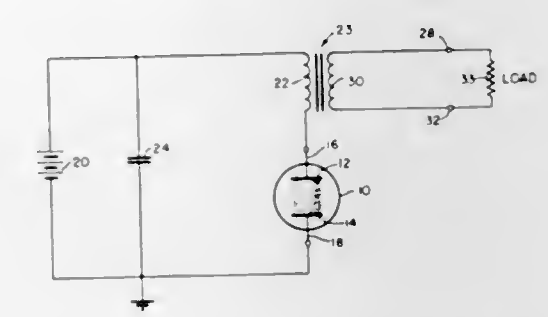

This invention relates to an alternating electric power generator and more particularly to a microwave power generator. When current flowing through certain gas mixtures is plotted as a function of the voltage applied to the mixtures there is a region in which the current decreases with increasing voltage. This region is said to be a negative differential resistance region. When a voltage is imparted through the gas mixture to bias the gas mixture within the negative differential resistance region, and when the gases so biased are coupled to a resonant circuit the combination will comprise an alternating current power generator developing electric power in the microwave region.

3,398,322
HIGH VOLTAGE SWITCH
Arthur H. Guenther, Albuquerque, N. Mex., assignor to the United States of America as represented by the Secretary of the Air Force
Filed Sept. 17, 1964, Ser. No. 397,345
7 Claims. (Cl. 315—150)

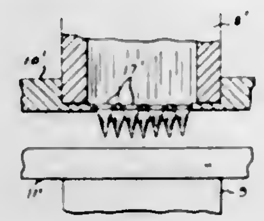

1. A switch for high direct voltages comprising a pair of terminals for connecting said switch into an electrical circuit, a pair of spaced electrodes connected to said terminals and forming a spark gap, the spacing of said gap being such that its self-breakdown voltage is slightly greater than the switch voltage, a laser of the type producing a pulse of coherent light of very high power and very short duration, and an optical system for bringing equal amounts of the light produced by said laser to focus at different points in said gap, said focal points lying on the line of minimum distance between said electrodes and the point nearest the negative electrode being separated therefrom by a distance lying in the range of zero to a small fraction of the minimum gap spacing.

3,398,323
DISTRIBUTION TRANSFORMER HAVING SECONDARY BREAKER
David W. Anderson, Zanesville, Ohio, assignor to McGraw-Edison Company, Milwaukee, Wis., a corporation of Delaware
Filed Jan. 12, 1966, Ser. No. 520,274
4 Claims. (Cl. 317—15)

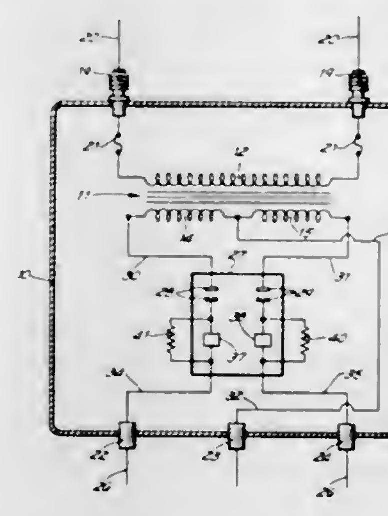

An arrangement for protecting the secondary winding of a transformer from overload current. The coils in each section of the secondary winding are connected together so that the total current from each winding section can be divided by a resistor connected in shunt with a temperature responsive element. When the portion of the current passing through the temperature responsive element attains an overload value, the element will actuate a breaker to interrupt the current.

3,398,324
D-C LOAD SWITCHING AND PROTECTIVE CIRCUITS WITHOUT MECHANICAL CONTACTS
Marion E. Cavanaugh, Dallas, Tex., assignor, by mesne assignments, to LTV Aerospace Corporation, Dallas, Tex., a corporation of Delaware
Filed Jan. 18, 1965, Ser. No. 426,007
7 Claims. (Cl. 317—16)

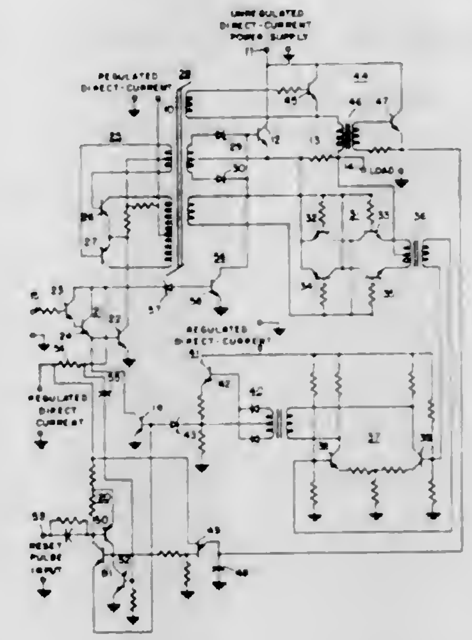

1. In a switching system having a series transistor with an output circuit that functions as a switching circuit to be connected in series with a load and a source of current, said transistor having a control circuit responsive to the application of current to close said switching circuit,

- a sensing resistor connected in series with said series transistor,
- a direct-current converter for converting current from a source of current to direct current in the amount required for said control circuit of said series transistor, said direct-current converter having a current output circuit and an amplitude control circuit, said current output circuit being connected to said control circuit of said series transistor,
- an amplitude control transistor having an input circuit and an output circuit, said amplitude control circuit being connected to said output circuit of said amplitude control transistor, said amplitude control transistor functioning as an amplitude control for said direct-current converter,
- current amplifier control means having an output connected to said input circuit of said amplitude control transistor and a control input connected to receive an on-control input signal,
- a shunt control transistor having an input circuit and and a controlled resistance output circuit, said controlled resistance output circuit being connected to said input circuit of said amplitude control transistor,
- voltage amplifier means having an input circuit connected across the output circuit of said series transistor and an output circuit connected to said input circuit of said shunt control transistor,
- said voltage amplifier means including a breakdown switching element operable for applying a predetermined output current from said amplifier means to said input circuit of said shunt control transistor in response to the voltage across the output circuit of said sensing resistor rising above a predetermined overload value,
- the conductivity of said shunt control transistor changing in response to application of current from said

amplifier means when said breakdown switching element is operated to change the conductivity of said amplitude control transistor sufficiently to decrease abruptly the amount of current that is being applied from said direct-current converter to said series transistor, and said series transistor responding to the abrupt decrease in current flow from said direct-current converter to open said switching circuit.

3,398,325
SOLID-STATE OVERLOAD PROTECTION CIRCUIT
Howard R. Shaffer, Glenside, Pa., assignor to I-T-E Circuit Breaker Company, Philadelphia, Pa., a corporation of Pennsylvania
Filed Sept. 17, 1965, Ser. No. 488,063
17 Claims. (Cl. 317—31)

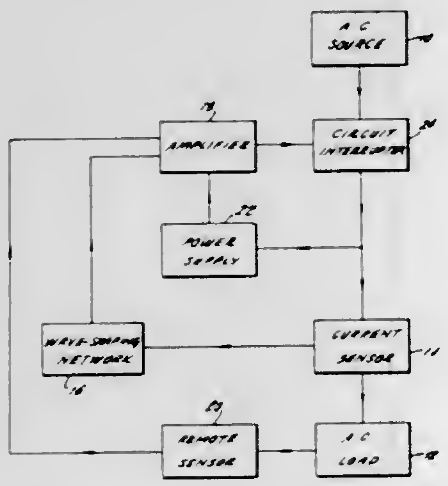

An overload protection circuit is disclosed having a wave shaping network connected to an electronic tripping network. The wave shaping network is responsive to current flow in a circuit to be protected for producing voltages representative of the instantaneous current in such circuit and a time delay value of such current. The electronic tripping network is responsive to predetermined values of these voltages to interrupt the circuit to be protected.

3,398,326
SOLID-STATE ELECTRICAL COMPONENT COMBINING MULTIPLE CAPACITORS WITH OTHER KINDS OF IMPEDANCE
Robert Swart, Newtown, and Irving Berlin, Bridgeport, Conn., assignors to Vitramon, Incorporated, Monroe, Conn., a corporation of Delaware
Filed Aug. 25, 1965, Ser. No. 482,544
4 Claims. (Cl. 317—101)

1. A solid state electronic component comprising a monolithic body having two generally planar major surfaces and at least three minor surfaces, a plurality of layers of dielectric material having their major surfaces oriented in a plane substantially parallel to the major surfaces of the body, and a plurality of layers of conductive material alternating with the dielectric material layers, each layer of conductive material comprising a single veneer substantially conforming to and confined within the boundaries of the preceding dielectric material layer and a projecting tongue extending outwardly in the plane of the veneer to at least the edge of the monolithic body, the layers of conductive material being divided into at least three sub-groups, the projecting tongues of the conductive layers of each sub-group extending to a different minor surface of the monolithic body; and, a conductive stripe superimposed on each of at least three of the minor surfaces of said monolithic body, each stripe being in electrical communication with the projecting tongues of the conductive layer sub-group exposed to that minor surface to electrically inter-connect the conductive layers corre-

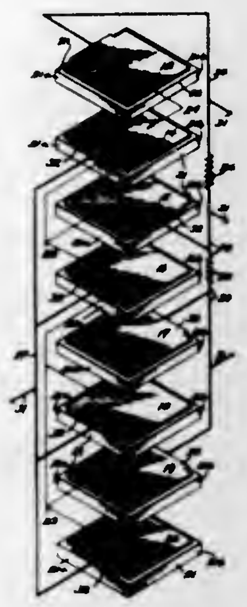

sponding to that sub-group, the conductive stripes and conductive layers cooperating to form at least two capacitive elements in the monolithic body.

3,398,327
LAMINATED BUS STRUCTURE AND TERMINAL ASSEMBLY
Frank H. Ferris, Toronto, Ontario, Canada, assignor to Federal Pacific Electric Company, a corporation of Delaware
Filed Oct. 24, 1966, Ser. No. 588,903
18 Claims. (Cl. 317—103)

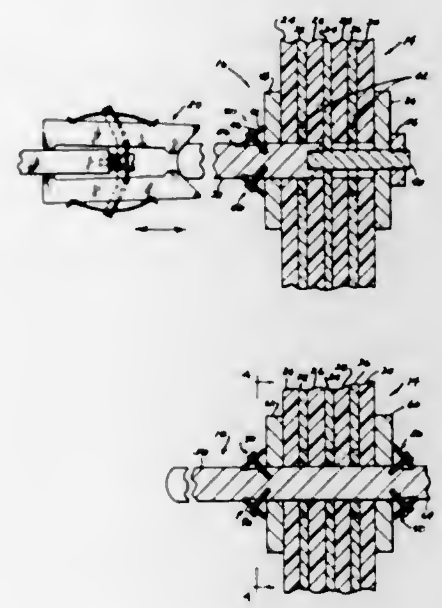

A laminated bus structure comprising interleaved sheets of insulation and conductor material is provided with terminal elements capable of receiving plug-in contact stresses without the delamination of the bus structure.

3,398,328
ELECTRICAL RELAY CIRCUITRY FOR MAGNETIZING SYSTEMS AND THE LIKE
Leonard Piekarski, Pomona, Calif., assignor of one-fourth each to Irving B. Collins, Los Angeles, Veronica Whitesides, Culver City, T. A. Smith, Long Beach, and Carroll E. Isham, Buena Park, Calif.
Filed Apr. 21, 1966, Ser. No. 544,207
15 Claims. (Cl. 317—123)

11. The combination comprising a relay including a coil to be energized by alternating current of a prede-

termined voltage, a first contact, and a second contact actuable relative to the first contact into circuit closing engagement with the first contact by energization of said coil, and means for supplying alternating current of said predetermined voltage to said coil, said relay being constructed to vibrate said second contact very substantially

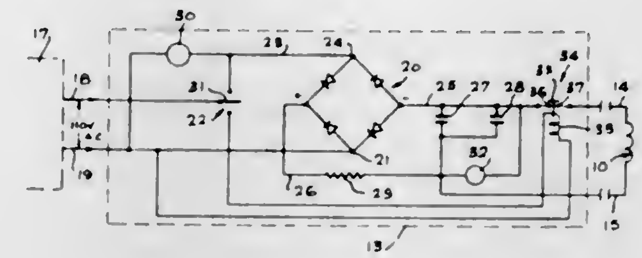

when energized by said predetermined voltage of alternating current and to an extent repeatedly and continually shifting said second contact relative to the other contact while the contacts are closed to thereby mechanically polish the contacts and prevent pitting thereof.

3,398,329
ELECTRICAL INTERLOCK MEANS
John B. Cataldo, Bloomfield Hills, and Frank W. Kussy, Birmingham, Mich., assignors to I-T-E Circuit Breaker Company, Philadelphia, Pa., a corporation of Pennsylvania
Filed Nov. 1, 1965, Ser. No. 505,899
13 Claims. (Cl. 317—136)

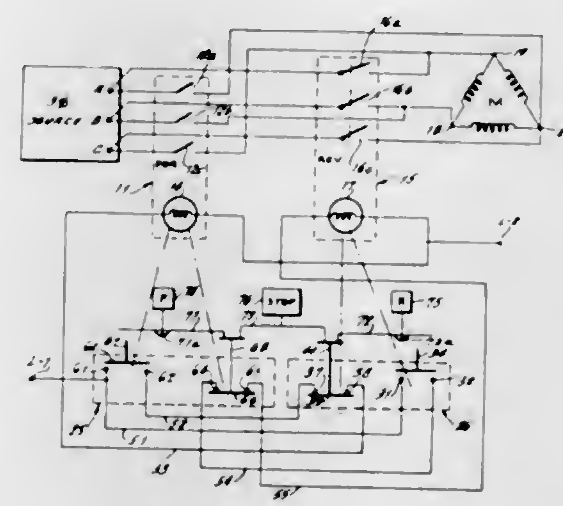

1. A combination including a first and a second electromagnetic contactor having a first and a second operating coil, respectively; electrical interlock means for preventing both of said coils from being energized at the same time; said interlock means comprising a first and a second normally open switch; a third and a fourth normally closed switch; means operating said first and said third switches to closed and opened positions, respectively, when said first coil is energized; means operating said second and fourth switches to closed and open positions, respectively, when said second coil is energized; a first energizing circuit for said coil including said first coil, said first and said fourth switches connected in electrical series, with each other; and a second energizing circuit for said second coil including said second coil, said second and said third switches connected in electrical series with each other.

3,398,330
BISTABLE COMMAND MODULE
John S. Poole, Oxon Hill, Md., assignor to the United States of America as represented by the Secretary of the Navy
Filed Apr. 23, 1965, Ser. No. 450,552
5 Claims. (Cl. 317—148.5)

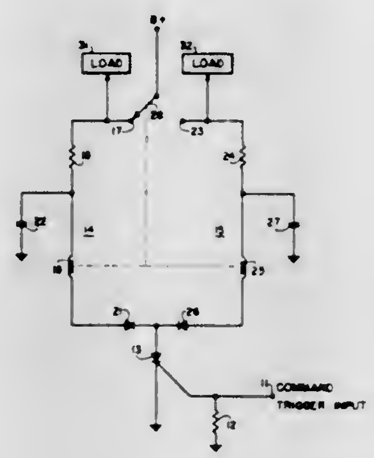

A bistable gating circuit including a pair of parallel circuits having their common connection coupled to a single silicon-controlled-rectifier control element. A conventional magnetic latching relay having two coils is employed, with each coil connected in one of the two parallel networks, and a relay contact, controlled by either of the coils, couples a voltage source to a storage means in one or the other of the parallel networks. This bistable command circuit is utilized for switching a voltage source to one of several loads and requires only a single gating means and a single control input.

3,398,331
RELAY CIRCUIT FOR VACUUM SYSTEM CONTROL WITH PENTODE TUBE MEANS
Deane P. Sheldon, Franklin, Mass., assignor to National Research Corporation, Cambridge, Mass., a corporation of Massachusetts
Filed Nov. 30, 1965, Ser. No. 510,494
3 Claims. (Cl. 317—149)

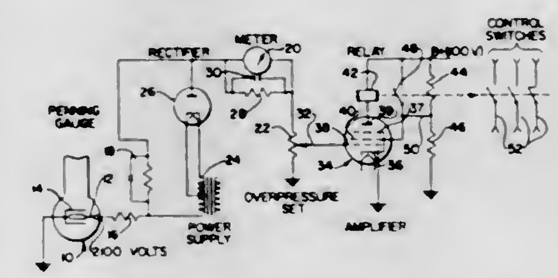

Relay actuated as a function of pressure as measured by a cold cathode discharge gauge. The gauge has an amplifier circuit which is designed to compensate for hysteresis in the relay element, but allows for adjustment of the relay's set point.

3,398,332
ELECTROLYTE IMPERVIOUS SEAL FOR ELECTROLYTIC CAPACITOR
Gerrard Alphonsus Logan, Uphall, West Lothian, Scotland, assignor to Sprague Electric Company, Adams, Mass., a corporation of Massachusetts
Filed Sept. 13, 1965, Ser. No. 486,865
Claims priority, application Great Britain, Oct. 21, 1964, 42,998/64
2 Claims. (Cl. 317—230)

A capacitor container is closed by a conventional disc assembly having at least one terminal passing there-

through. Potential electrolyte leakage paths around the edge of the disc assembly and around the terminal are sealed by a thick paste or gel which is formed by interac-

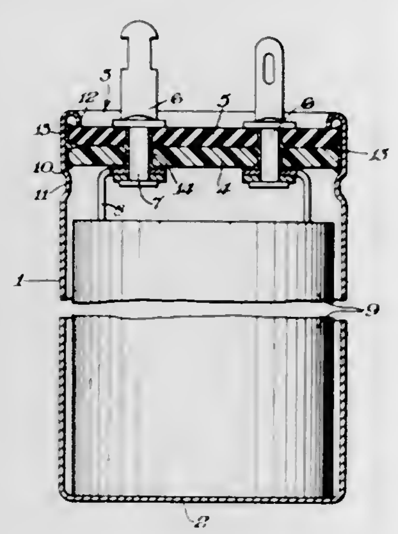

tion between powder material at the potential leakage paths and electrolyte from the capacitive element within the container.

3,398,333
ELECTRICAL COMPONENT END SEAL
Dominick John Zeppieri, North Adams, Mass., assignor to Sprague Electric Company, North Adams, Mass., a corporation of Massachusetts
Filed Jan. 27, 1966, Ser. No. 523,432
5 Claims. (Cl. 317—230)

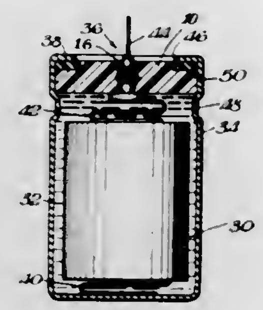

A terminal shaft, surrounded by an electrically insulating plug, includes a centrally located portion of enlarged diameter having a recess extended therearound, and the enlarged portion exerts a substantially radial pressure within the plug making it conform to the shaft and fill the recess.

3,398,334
SEMICONDUCTOR DEVICE HAVING REGIONS OF DIFFERENT CONDUCTIVITY TYPES WHEREIN CURRENT IS CARRIED BY THE SAME TYPE OF CARRIER IN ALL SAID REGIONS
William Shockley, Los Altos, Calif., assignor, by mesne assignments, to International Telephone and Telegraph Corporation, New York, N.Y., a corporation of Maryland
Filed Nov. 23, 1964, Ser. No. 412,959
7 Claims. (Cl. 317—234)

A semiconductor device having adjacent regions of differing conductivity types with electrodes to at least two of said regions, wherein current flow between the electrodes is carried essentially by only one type of carrier, i.e. either by free electrons or by holes. In conventional semiconductor devices, current is carried by free electrons in N-type regions and by holes in P-type regions; in the device described herein, current is carried by one of these types in all regions, regardless of conductivity type. This effect is achieved by making one of the regions sufficiently thin so that the boundary between said region and an adjacent region of different conductivity type forms a potential barrier for majority carriers of said adjacent region; the thin region is designed to produce a potential barrier of limited height at said boundary, so that the electrostatic potential energy profile in the vicinity of said boundary does not cross the Fermi level. The net result is that the thin region behaves as though it had the same conductivity type as the adjacent region, while providing the desired majority carrier potential barrier required to reproduce a rectifying characteristic between the device electrodes. The boundary between the aforementioned regions is not a P-N junction in the conventional sense, but more nearly resembles the Schottky type barrier produced at certain metal-semiconductor interfaces exhibiting rectifying characteristics. Disclosed herein are a diode and a transistor employing the aforementioned majority carrier principle.

3,398,335
TRANSISTOR STRUCTURE WITH AN EMITTER REGION EPITAXIALLY GROWN OVER THE BASE REGION
Frederick H. Dill, Jr., Putnam Valley, N.Y., assignor to International Business Machines Corporation, Armonk, N.Y., a corporation of New York
Filed Mar. 31, 1965, Ser. No. 446,780
10 Claims. (Cl. 317—235)

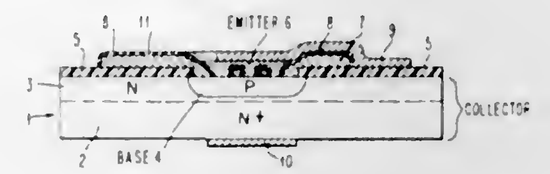

This is a semiconductor transistor having an emitter epitaxially grown over the base region and at least one ohmic contact to the base region which contact is covered with an insulation layer.

3,398,336
ELECTRICAL CHARGING UTILIZING A TWO-PHASE LIQUID MEDIUM
Robert W. Martel, Webster, and Robert M. Ferguson, Rochester, N.Y., assignors to Xerox Corporation, Rochester, N.Y., a corporation of New York
Filed May 17, 1965, Ser. No. 456,151
12 Claims. (Cl. 317—262)

Insulating or photoconductive insulating members are charged by passing the charge through a two-phase liquid medium which is in contact with the charging electrode and the member to be charged.

3,398,337
SHORT-CHANNEL FIELD-EFFECT TRANSISTOR HAVING AN IMPURITY GRADIENT IN THE CHANNEL INCREASING FROM A MIDPOINT TO EACH END
John J. So, 1934 Rock, Mountain View, Calif. 94040
Filed Apr. 25, 1966, Ser. No. 545,035
5 Claims. (Cl. 317—235)

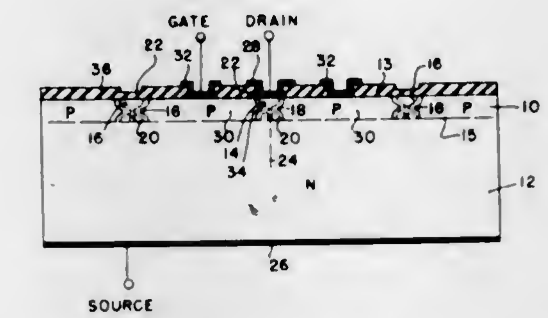

A field-effect device having a low value of R_{on} and having a very short channel formed in such a manner as to have a gradient of impurities least concentrated at about the center of the channel and increasing in concentration from the center to each end of the channel. The device has source and drain contacts at the respective ends of the channel.

3,398,338
MICA DISC CAPACITOR
John E. Dornfeld, 11563 N. Spring Ave. 65W, Mequon, Wis. 53092
Continuation-in-part of application Ser. No. 575,742, Aug. 29, 1966. This application July 10, 1967, Ser. No. 652,284
5 Claims. (Cl. 317—258)

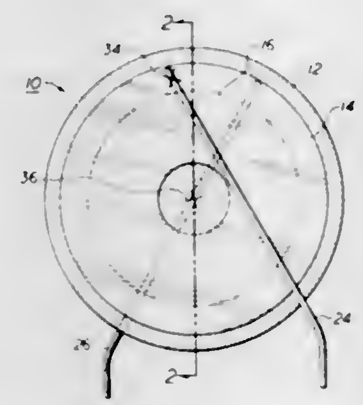

Leads are attached to electrodes on opposite surfaces of a mica disc in areas of the electrodes that are not in capacitive overlap. The electrode on one side of the mica disc is a large diameter annulus, and the opposite electrode is a smaller diameter plate of greater area than the opening in the annular electrode and located opposite the opening. A lead is attached to the annular electrode in an area beyond the capacitive overlap with the smaller electrode, and a lead is attached to the smaller electrode in an area opposite the opening in the annular electrode.

3,398,339
ELECTRICAL CAPACITORS HAVING INSULATED EXTENDED TABS
Ralph E. Pierpont, Livingston L. Rice, Richard L. Rollins, and Gordon E. Walters, Williamstown, Mass., assignors to Sprague Electric Company, North Adams, Mass., a corporation of Massachusetts
Filed Oct. 19, 1966, Ser. No. 587,703
3 Claims. (Cl. 317—260)

Each of a plurality of tabs extending from one end of a rolled capacitor is provided with an insulating member which is placed within the roll between the tab and the capacitor dielectric strip and which extends from the roll with the tab to insulate the extended portion of

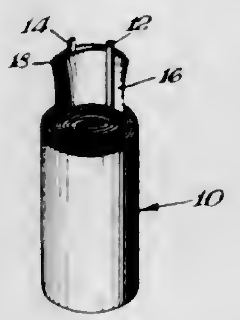

the tab. The extended insulating material protecting each tab is of sufficient length to overlap at least one other of the extended tabs.

3,398,340
HIGH-VOLTAGE ELECTRICAL CAPACITOR
Eamonn D. A. Geoghegan, Fort Pierce, Fla., assignor to Sprague Electric Company, North Adams, Mass., a corporation of Massachusetts
Filed Oct. 19, 1966, Ser. No. 587,777
5 Claims. (Cl. 317—260)

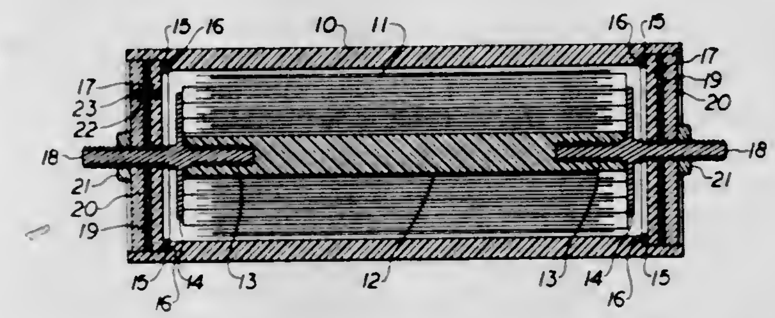

Terminal studs have flanges which are connected to the foil extensions of an extended-foil capacitance section that is convolutely wound on a solid core. The terminal studs are secured to the solid core and to cover assemblies which are compressed in an insulating housing so as to seal the capacitance section therein.

3,398,341
ACTIVE COMPENSATION NETWORK TO STABILIZE AN INERTIAL PLATFORM
Jerry L. Dooley and Herbert R. McCarley, Huntsville, Ala., assignors to the United States of America as represented by the Secretary of the Army
Filed Feb. 16, 1965, Ser. No. 433,232
8 Claims. (Cl. 318—18)

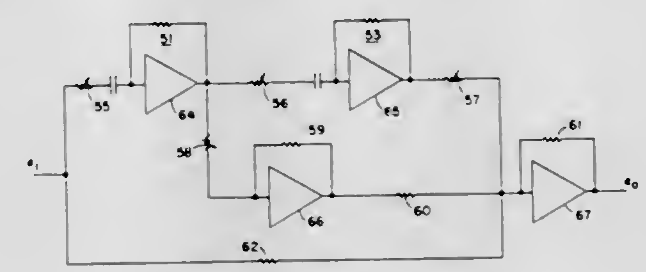

A compensation network for use in a stabilized platform system having gyroscopes in each of its three inertial reference loops to control a restoring torquer means in the system. A detection and amplification loop circuit is provided in each inertial reference loops and a compensation network is provided in each detection and amplification cir-

cuit. Each compensation network includes a second order lead circuit, a first order lead circuit and a proportional path.

3,398,342
AUTOMATIC BURNER HEIGHT CONTROL CIRCUIT
Derek H. Redman, Croydon, England, assignor to Hancock & Co. (Engineers) Limited, Croydon, England, a British company
Filed Nov. 12, 1965, Ser. No. 507,471
Claims priority, application Great Britain, Nov. 13, 1964, 46,328/64
10 Claims. (Cl. 318—18)

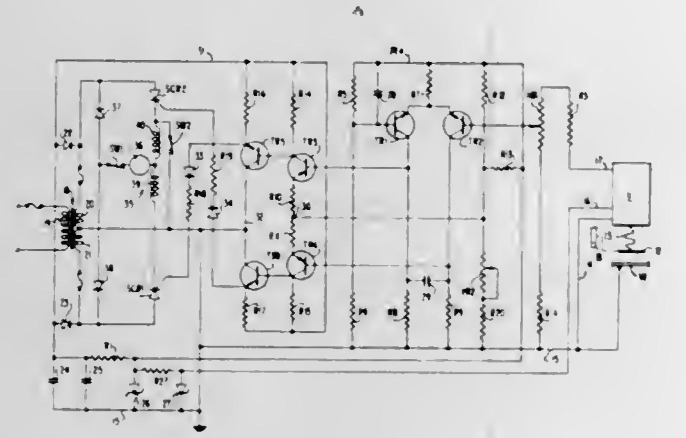

Electric circuit for actuating a motor which automatically raises and lowers the cutting burner of an oxygen jet cutting machine to maintain a constant height above a workpiece, using a probe movable with the burner whose capacitance with the workpiece is included in the circuit of an oscillator, differentially connected transistors fed respectively with a constant direct voltage and the oscillator output, the transistors controlling the two halves of a differential amplifier the outputs of which control gated rectifiers, the direction of rotation of the motor depending upon which of the gated rectifiers is conductive.

3,398,343
AC MOTOR BRAKING SYSTEM USING A FULL WAVE RECTIFIER CIRCUIT
William H. Plumpe, Jr., St. Louis, Mo., assignor to Biological Research, Inc., a corporation of Delaware
Filed Aug. 5, 1965, Ser. No. 477,553
7 Claims. (Cl. 318—212)

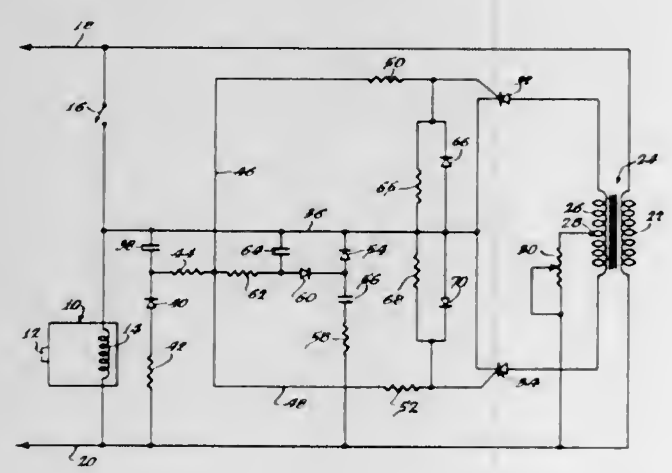

A pair of silicon controlled rectifiers are connected in circuit with an AC motor to cause full wave rectified DC voltage to flow through the motor for braking purposes. A timing network gates the silicon controlled rectifiers for a predetermined time period after AC voltage has been disconnected from across the motor.

3,398,344
MOTOR CONTROL FOR D-C MOTORS WITH SERIES FIELD WINDINGS
Joseph F. McCormick, Drexel Hill, Pa., assignor to I-T-E Circuit Breaker Company, Philadelphia, Pa., a corporation of Pennsylvania
Filed June 17, 1965, Ser. No. 464,601
2 Claims. (Cl. 318—252)

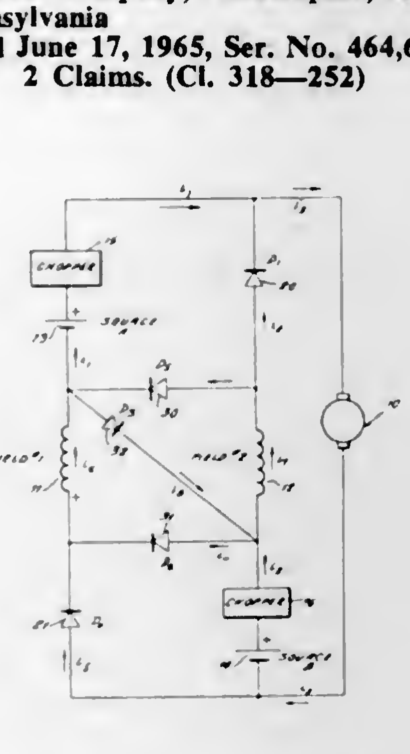

A speed control for D-C motors using two D-C sources with respective choppers for energizing two field windings and the armature winding of the motor. The output pulses of the choppers are connected to respective field windings prior to overlapping of the output pulses. Freewheeling diodes are associated with the field windings.

3,398,345
DUAL CHANNEL TRIGISTOR OUTPUT STAGE MOTOR SPEED AND REVERSING CONTROL SYSTEM
Robert L. James, Bloomfield, N.J., assignor to The Bendix Corporation, a corporation of Delaware
Filed Sept. 30, 1965, Ser. No. 491,585
5 Claims. (Cl. 318—341)

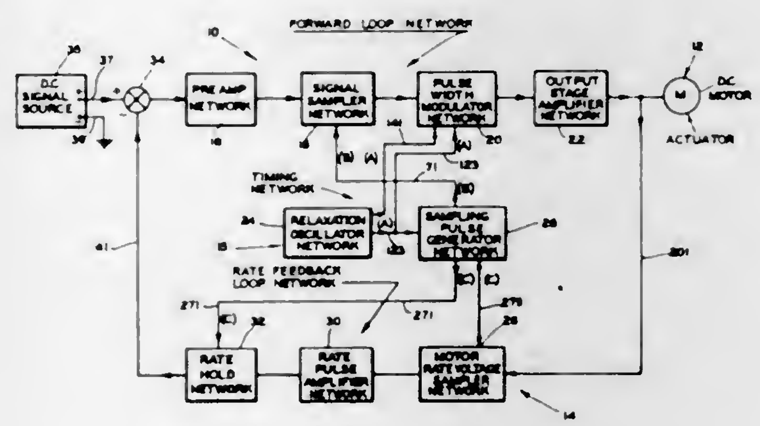

1. For use in controlling a direct current motor of a type having a load winding for controlling the direction and speed of rotation of the motor; a first source of electrical energy having an anode and a cathode, first electrical conducting means for connecting the anode of the first source to one terminal of the load winding, a second source of electrical energy having an anode and a cathode, second electrical conducting means for connecting the cathode of the second source to said one terminal of the load winding, means connecting the other terminal of said load winding to the cathode of said first source and to the anode of said second source, said first electrical conducting means including a first control means operable in a first sense for opening and in a second sense for closing

the connection of the anode of the first source to the one terminal of the load winding, a second control means operable in a first sense for opening and in a second sense for closing the connection of the cathode of the second source to the one terminal of the load winding, and means for selectively operating said first and second control means in said first and second senses for controlling the direction of rotation of said motor.

3,398,346
UNBALANCE VALVE WITH LID RESET
Roland D. Beck, La Crescenta, Calif., assignor to Robertshaw Controls Company, Richmond, Va., a corporation of Delaware
Filed Oct. 24, 1965, Ser. No. 504,803
17 Claims. (Cl. 318—460)

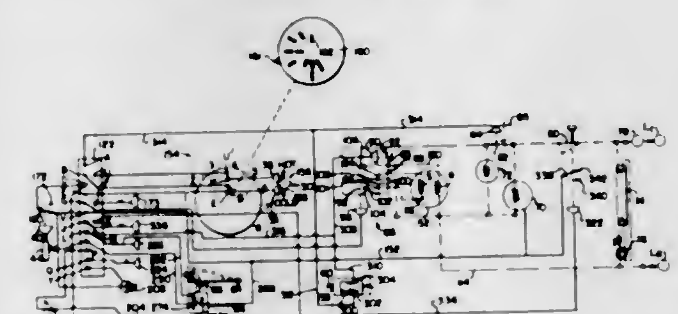

1. In combination:
an automatic machine having a rotatable member which has abnormal unbalance condition vibrations;
driving means for driving said rotatable member;
drive controlling vacuum actuator means controlling said driving means to produce a drive condition and a stop condition of said rotatable member in response to various vacuum conditions in said actuator means;
a vacuum distributing program means producing said various vacuum conditions in said actuator means to drive and stop said rotatable member;
an unbalance valve means movable in response to said abnormal unbalance condition vibrations to a locked stop position to cause said program means to stop said rotatable member, said unbalance valve means having an unlocked drive position permitting said program means to drive and stop said rotatable member independently of said unbalance valve means;
and an access closure member having open and closed positions and having a closure valve means permitting said unbalance valve means to remain in locked stop position when said closure member is in closed position and unlocking said unbalance valve means when said closure member is in open position.

3,398,347
LOAD CIRCUIT CONTROL FOR GENERATING SYSTEM
Angelo M. Citro, Chagrin Falls, Ohio, assignor to The Leece-Neville Company, Cleveland, Ohio, a corporation of Ohio
Filed Apr. 29, 1966, Ser. No. 546,325
6 Claims. (Cl. 320—25)

This system has an alternator-rectifier unit for producing a unidirectional output voltage to energize a load which includes a vehicle battery. The contacts of a two-coil load relay are connected between the output of the alternator-rectifier unit and the load. A first coil of this relay, which is connected to be energized solely in accordance with the output of the alternator-rectifier unit, will close the load relay contacts when this output reaches a predetermined value. A blocking diode is connected between the second coil and one of the battery terminals to prevent energization of the second coil when the battery polarity is correct. However, when the battery polarity

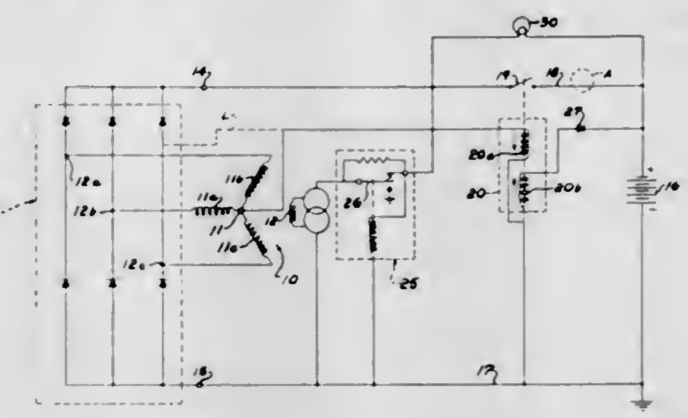

is reversed, this diode will pass current to the second coil, energizing the latter to prevent the first coil from closing the load relay contacts.

3,398,348
HIGH VOLTAGE ELECTRICAL CONVERTER APPARATUS AND PULSE TRANSFORMER THEREFOR
Leé A. Kilgore, Franklin Township, Export, Harvey E. Spindle and Louis A. Casanova, Pittsburgh, and Thomas W. Dakin, Murrysville, Pa., assignors to Westinghouse Electric Corporation, Pittsburgh, Pa., a corporation of Pennsylvania
Filed Sept. 8, 1965, Ser. No. 485,753
17 Claims. (Cl. 321—5)

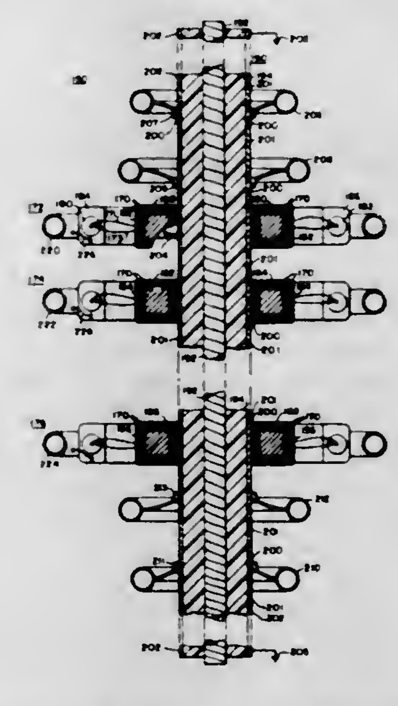

A high voltage converter of the semiconductor type, having a pulse transformer arrangement which includes a single primary winding in the form of an insulated high voltage cable. A plurality of magnetic cores, each having a plurality of secondary windings, are disposed in spaced relation with one another about the high voltage cable, with the secondary windings being connected to the semiconductor devices of the converter. Pulse producing means is connected to the high voltage cable.

3,398,349
ENCASED HIGH VOLTAGE ELECTRICAL CONVERTER OF THE SEMICONDUCTOR TYPE
Paul Evans, Jr., Warren, Ohio, and Francis D. Kaiser, Sharon, Pa., assignors to Westinghouse Electric Corporation, Pittsburgh, Pa., a corporation of Pennsylvania
Filed Oct. 20, 1965, Ser. No. 498,924
6 Claims. (Cl. 321—5)

An electrical converter having a plurality of groups of serially connected semiconductor devices disposed on

spaced parallel planes, with the groups of semiconductor devices being serially connected to reverse the direction of current flow from group to group. The plurality of groups of semiconductor devices are disposed in a tank filled with insulating and cooling means. Firing means for the semiconductor devices is provided by a high voltage

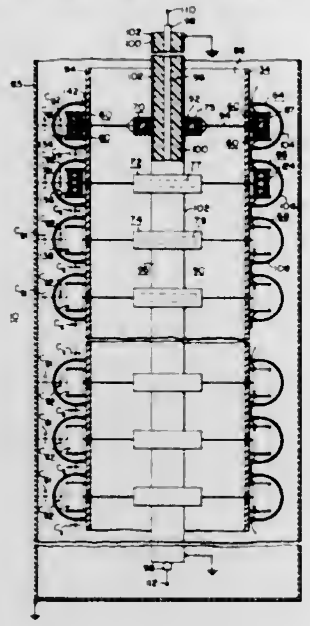

cable, means for providing switching pulses for the high voltage cable, and a plurality of magnetic cores each having a plurality of windings. The magnetic cores are disposed in predetermined spaced relation on the high voltage cable, each adjacent one of the groups, with the windings on the magnetic cores being connected to the semiconductor devices of its associated group.

3,398,350
DIRECT CURRENT COMMUTATION SYSTEM FOR BRUSHLESS ELECTRICAL MOTORS
Donald O. Ruff, Anderson, Ind., assignor to General Motors Corporation, Detroit, Mich., a corporation of Delaware
Filed Oct. 21, 1965, Ser. No. 500,112
5 Claims. (Cl. 321—5)

5. A direct current commutation system for brushless type electrical motors comprising, positive and negative polarity input supply lines, a bridge type commutating switching circuit having a positive and a negative polarity bank of silicon controlled rectifier commutating switching devices each having anode, cathode and gate electrodes connected across said input supply lines, a plurality of electrical charge storage devices each corresponding to one of said commutating switching devices for storing an electrical charge, first and second auxiliary charging direct current potential sources, first charging circuit means for connecting those said electrical charge storage devices corresponding to the said commutating switching devices included in said positive polarity bank in parallel across one of said auxiliary charging direct current potential sources, second charging circuit means for connecting those said electrical charge storage devices corresponding to the said commutating switching devices included in said negative polarity bank in parallel across the other one of said auxiliary charging direct current potential sources, a controllable charging switching device having at least two current carrying electrodes corresponding to each of said electrical charge storage devices, means for connecting the said current carrying electrodes of each of said controllable charging switching devices in series with the corresponding electrical charge storage device, a controllable extinguishing switching device having at least two current carrying electrodes and a control electrode and being of the type which may be triggered to conduction upon the application of a proper polarity signal potential to the control electrode thereof corresponding to each of said commutating switching devices, means for connecting one plate of each of said capacitors corresponding to those said commutating switching devices included in said positive polarity bank to said negative polarity input supply line, means for connecting the said anode-cathode electrodes of each of said controllable extinguishing switching devices corresponding to those said commutating switching devices included in said positive polarity bank in series between the said cathode electrode of the said commutating switching device to which it corresponds and the other plate of the

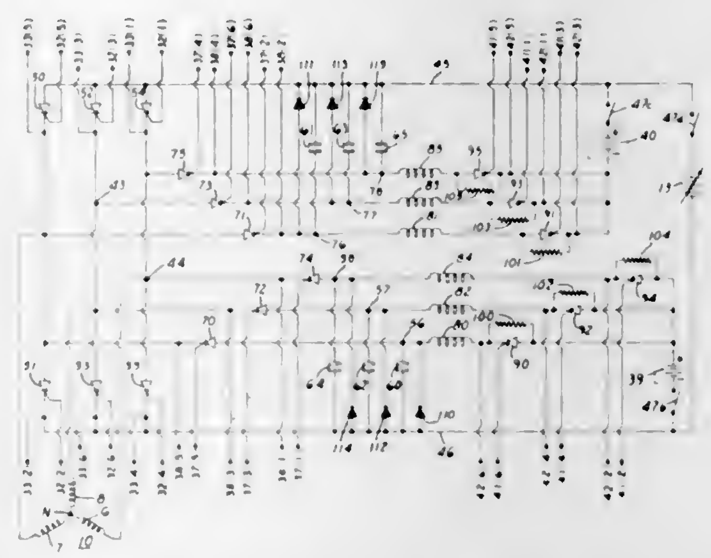

corresponding said capacitor and forward poled, means for connecting one plate of each of said capacitors corresponding to those said commutating switching devices included in said negative polarity bank to said positive polarity input supply line and means for connecting the said anode-cathode electrodes of each of said controllable extinguishing switching devices corresponding to those said commutating switching devices included in said negative polarity bank in series between the said anode electrode of the said commutating switching device to which it corresponds and the other plate of the corresponding said capacitor and forward poled.

3,398,351
HIGH VOLTAGE RECTIFIER ASSEMBLY HAVING TUBULAR CAPACITOR COMPENSATION MEANS
Alfred Kuntke, Hamburg-Wellingsbuttel, Germany, assignor to North American Philips Company, Inc., New York, N.Y., a corporation of Delaware
Filed May 24, 1965, Ser. No. 458,324
Claims priority, application Germany, June 4, 1964, M 61,241
8 Claims. (Cl. 321—11)

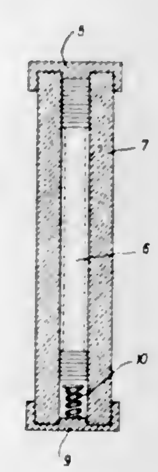

A high voltage rectifier comprising a series of rectifier elements axially arranged within a tube composed of an insulating material having a dielectric constant of at least 1000, and a pair of conductive discs covering the ends of the tube and in electrical contact with the end terminals of the rectifier assembly to form a capacitor that equalizes the voltage distribution along the rectifier assembly and simultaneously shields same from the effects of external fields.

3,398,352
APPARATUS AND METHOD FOR STARTING, OPERATING AND STOPPING AN INVERTER
Robert S. Jamieson, San Juan Capistrano, Calif., assignor, by mesne assignments, to Lorain Products Corporation, Lorain, Ohio, a corporation of Ohio
Filed Jan. 20, 1964, Ser. No. 338,748
61 Claims. (Cl. 321—45)

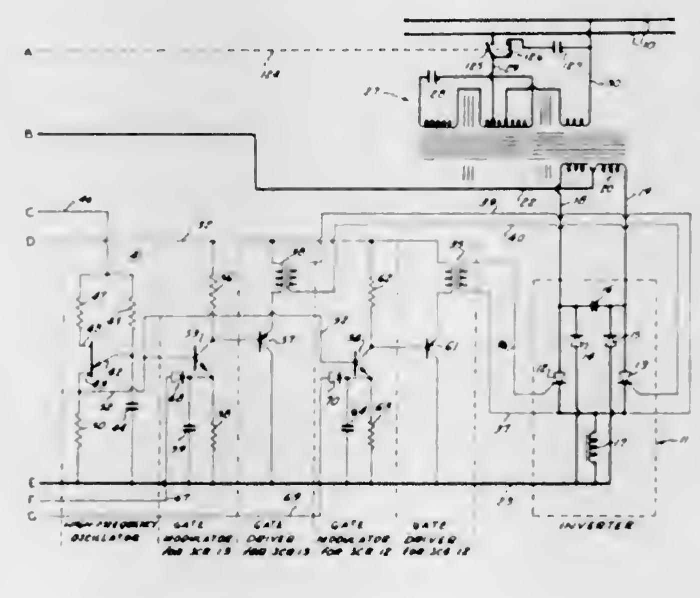

The disclosure relates to method and apparatus for starting and stopping an inverter which is connected through a transformer to a load, particularly a resonant load. Starting is effected by initially operating the inverter at a frequency much higher than the normal free-running frequency thereof. Stopping is effected by disconnecting the load from the transformer, and thereafter discontinuing the gate signals to the controlled rectifiers in the inverter. The disclosure further relates to a method and apparatus for driving the gate of a controlled rectifier, by supplying to such gate a train of trigger signals each having a magnitude and duration sufficient to trigger the controlled rectifier, the frequency of the train of signals being in the kilocycle range and being many times the frequency of the current passed through the controlled rectifier to the load connected thereto.

3,398,353
MAGNETO SYSTEMS
Ray Campbell Noddin, Chicopee, Elwin John Brayley, East Longmeadow, and Thomas Edwin Swift, West Springfield, Mass., assignors to Globe-Union Inc., Milwaukee, Wis., a corporation of Delaware
Filed July 2, 1965, Ser. No. 469,078
15 Claims. (Cl. 322—17)

An improved flywheel magneto system and especially one having enhanced reliability by virtue of the use of solid state threshold devices and magnetoeletric triggering thereof and a unique control system including energy storage devices for controlling the conductivity of the solid state threshold devices. The invention provides a solid state magneto system which is free of moving parts other than the rotating flywhel. There are no cams or rubbing surfaces which can wear or become improperly adjusted. The threshold device acts as a controllable shunt for magneto current and can be rapidly rendered nonconductive to produce a steep transient voltage for fuel ignition purposes. A unique triggering system is provided

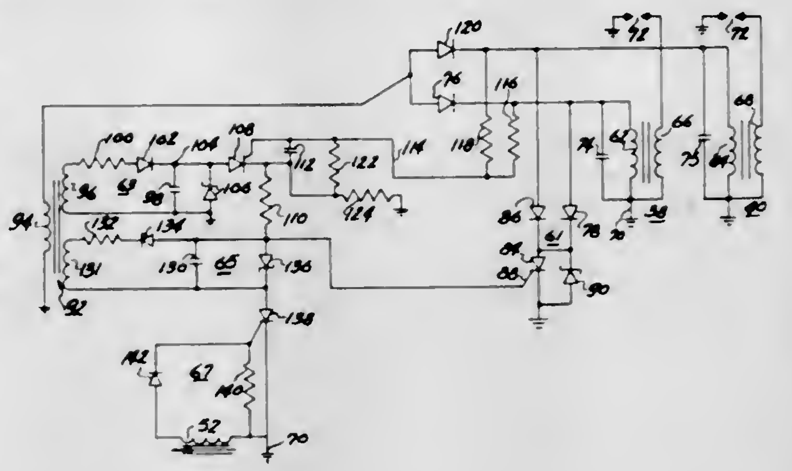

which utilizes so-called "Maverick" signals which were heretofore considered undesirable and were suppressed.

3,398,354
VOLTAGE CONTROL APPARATUS
John M. Budd, Jr., Edina, Minn., assignor to Honeywell Inc., a corporation of Delaware
Filed Dec. 23, 1964, Ser. No. 420,612
8 Claims. (Cl. 323—6)

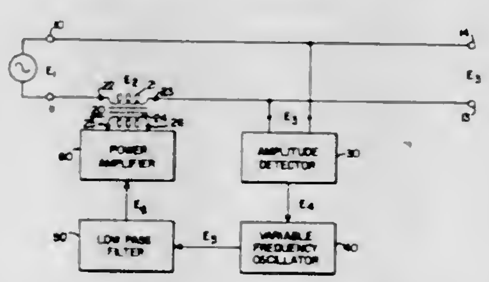

A circuit which produces a regulated output voltage by sensing the output voltage and utilizing the signal against a reference to adjust the frequency of a variable frequency oscillator whose output is applied through a transformer to a secondary winding in series with the source voltage between the output terminals.

3,398,355
GROUNDWATER SURVEY METHOD AND APPARATUS
Anthony Rene Barringer, Willowdale, Ontario, and Joseph F. White, Agincourt, Ontario, Canada, assignors to Barringer Research Limited, Rexdale, Ontario, Canada
Filed Aug. 9, 1965, Ser. No. 478,329
12 Claims. (Cl. 324—.5)

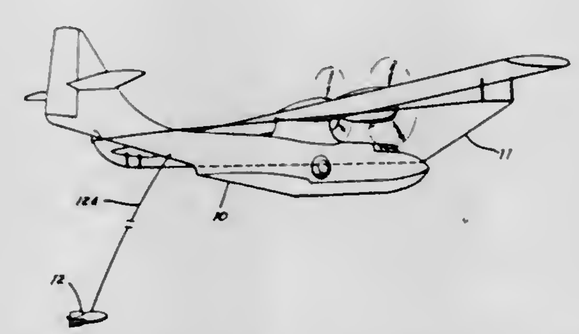

A method and apparatus are disclosed for detecting moisture in the earth from a station at or above the surface of the earth. Spaced, unidirectional magnetic field pulses are applied to the earth to produce nuclear preces-

sion in the moisture therein. Precessional signals are picked up in the intervals between the pulses. Analysis of the precession signals yields estimates of the quantity of moisture in said volume of earth and the nature of its environment.

3,398,356
METHOD UTILIZING A PAIR OF SUBSURFACE ANTENNAS FOR DETERMINING THE PHYSICAL PROPERTIES EFFECTING RADIO ENERGY PROPAGATION THROUGH EARTH
William L. Still, Lovettsville, Va., assignor, by mesne assignments, to Westinghouse Electric Corporation, Pittsburgh, Pa., a corporation of Pennsylvania
Filed Feb. 10, 1964, Ser. No. 343,888
6 Claims. (Cl. 324—6)

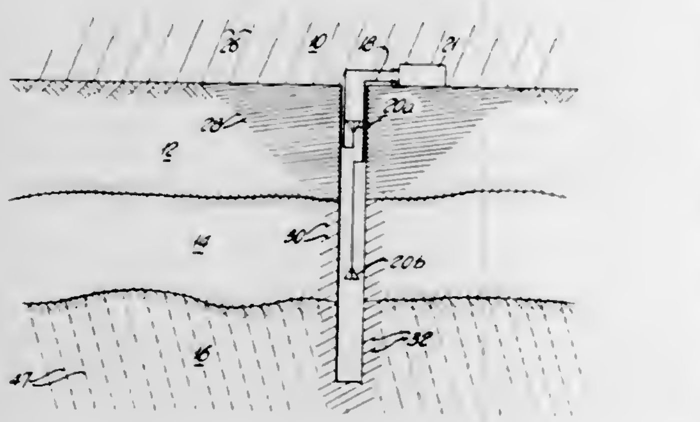

Method for obtaining a representation of the characteristics of the propagating path between spaced antennas within the earth, one antenna located from and below the other. Radio energy propagating almost vertically downward in the earth is received by each antenna and compared. The electrical characteristics of the propagating path between said antennas are reproduced in response to the comparison to simulate the physical properties of the earth between and in the vicinity of the antennas.

3,398,357
CIRCUIT BREAKER TESTING CIRCUITS IN WHICH A NORMALLY CLOSED PAIR OF CONTACTS IN A HIGH CURRENT PATH SHORT CIRCUITS A HIGH RECOVERY VOLTAGE SOURCE AND ANOTHER PAIR OF NORMALLY CLOSED CONTACTS FORMS A LOW IMPEDANCE SHUNT CIRCUIT ACROSS THE HIGH VOLTAGE SOURCE UNTIL BOTH PAIRS OF CONTACTS ARE OPENED
Robert G. Colclaser, Jr., Delmont, Pa., assignor to Westinghouse Electric Corporation, Pittsburgh, Pa., a corporation of Pennsylvania
Continuation-in-part of application Ser. No. 337,248, Jan. 13, 1964. This application Apr. 24, 1967, Ser. No. 649,755
3 Claims. (Cl. 324—28)

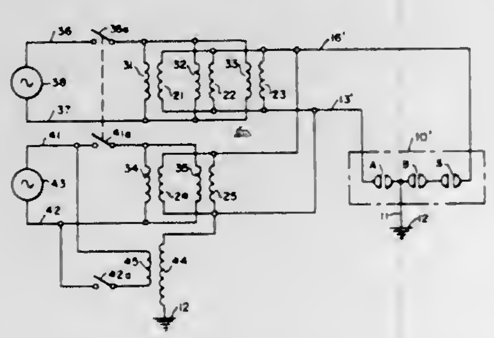

A breaker unit to be tested has at least one pair of normally closed separable contacts. An additional pair of normally closed separable contacts, which may be an additional pair of breaker contacts, or may be contact means provided for testing purposes, is connected in series with the first-named pair of contacts. A high current alternating current source is connected so that a large alternating current flows through both pairs of contacts while they are closed. A source of high alternating current voltage is connected across the breaker contacts, which while closed form a short circuit across the source of high alternating current voltage, and the additional contacts while closed form a low impedance shunt path by way of the high current source across the high voltage source. The phases of the two currents are such that they pass through zero current at substantially the same instant. Means is provided for opening both pairs of contacts together, and when the arc currents thereacross fall to zero, a high voltage simulating a recovery voltage is automatically developed across the breaker contacts without requiring critical timing circuits or any waveform measurements or current injection. A high voltage equal to the amplitude of the high voltage source plus or minus the no load amplitude of the voltage of the high current source is developed automatically across the other pair of contacts when the arc currents go to zero, depending upon the relative phase relationships of the voltages of the high current source and the high voltage source.

3,398,358
DEVICE FOR DETECTING VARIATIONS IN THE OXYGEN CONTENT OF GASES CONTAINING SMALL AMOUNTS OF OXYGEN
Cornelis Bokhoven, and Wilhelm J. Hanssen, Geleen, Netherlands, assignors to Stamicarbon N.V., Heerlen, Netherlands
Filed Oct. 22, 1964, Ser. No. 405,718
Claims priority, application Netherlands, Oct. 22, 1963, 299,586
2 Claims. (Cl. 324—29)

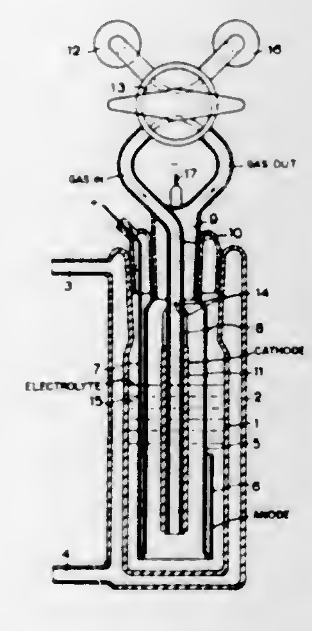

A device for detecting variations in the oxygen content of gases containing small amounts of oxygen, comprising a galvanic cell which is provided with a gas compartment wherein a cathode partly extending above electrolyte is exposed to the gas, wherein the size or aggregate size of one or more gas inlet openings of said compartment is substantially smaller than the size or aggregate size of one or more outlet openings of such compartment, and the size of such compartment and the location of the inlet and outlet openings relative to each other and to the cathode are such that in use only a portion of the total quantity of gas entering the compartment will reach the cathode and the rest of the gas will leave the compartment without contacting the cathode.

3,398,359
HYSTERESIS DIAGRAM DISPLAY DEVICE
Paul Weber, Freiburg im Breisgau, Germany, assignor to Fritz Hellige & Co. G.m.b.H., Freiburg im Breisgau, Germany
Filed Sept. 27, 1965, Ser. No. 490,177
Claims priority, application Germany, Oct. 7, 1964, H 53,969
6 Claims. (Cl. 324—34)

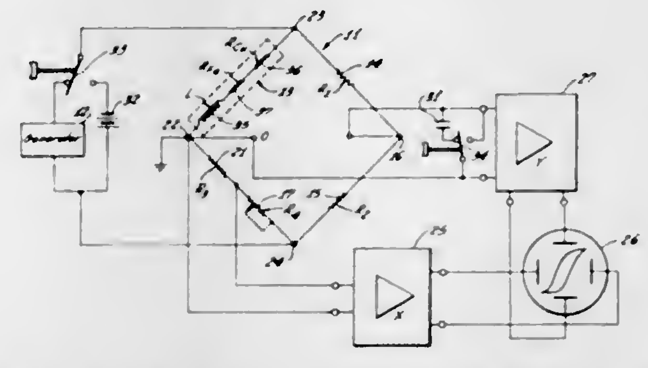

A device for displaying the hysteresis diagram of a finished ferromagnetic core device having at least one winding thereon. The winding is connected as one arm of a resistor bridge circuit. The bridge is balanced with a DC source to compensate for resistance of the winding. An AC source connected across the bridge energizes the core. A portion of the AC voltage is applied to the X axis of an oscilloscope. The Y axis signal is obtained across the opposite arms of the bridge from the source. An RC integrator in the Y axis circuit is formed by a bridge resistor and a short capacitor connected across the Y axis deflection terminals.

3,398,360
MAGNETIC BODY DETECTOR SENSITIVE ONLY TO MAGNETIC FIELD VARIATIONS WITHIN A PREDETERMINED RANGE
Joseph L. Behr, Affton, and Niels C. Andersen, St. Louis, Mo., assignors to Sperry Rand Corporation, New York, N.Y., a corporation of Delaware
Filed May 20, 1964, Ser. No. 368,964
12 Claims. (Cl. 324—43)

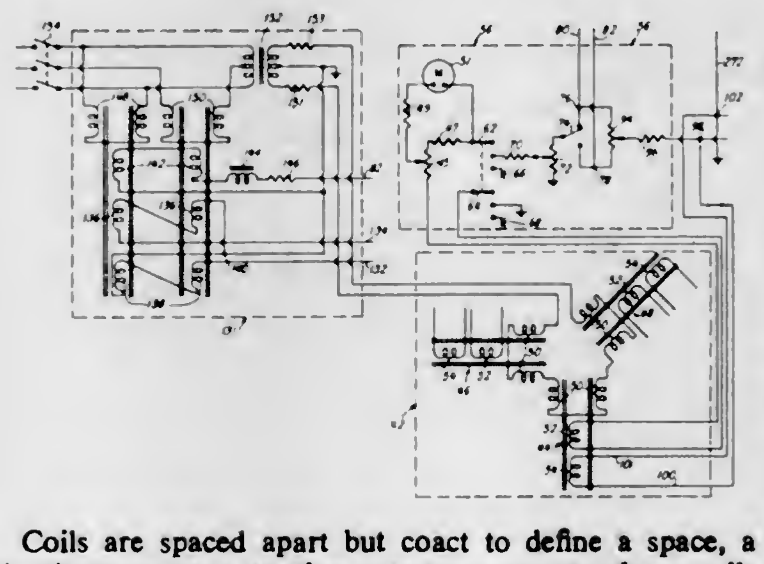

Coils are spaced apart but coact to define a space, a circuit connects a sensing magnetometer to those coils and coacts with that sensing magnetometer and with those coils to provide a drift-free dynamic and continuous nulling, within that space, of the earth's magnetic field and of frequencies below a predetermined frequency, a detecting magnetometer is disposed within that space, a second circuit connects that detecting magnetometer to an indicator, and that second circuit attenuates signals having frequencies above a second and higher predetermined frequency, so the detecting magnetometer can supply signals to the indicator which truly indicate the presence of large magnetic bodies.

3,398,361
TRAVELING WAVE TUBE TEST APPARATUS
Franklin H. Prestwood, P.O. Box 237, Valparaiso, Fla. 32580
Filed Aug. 13, 1965, Ser. No. 479,676
3 Claims. (Cl. 324—58)

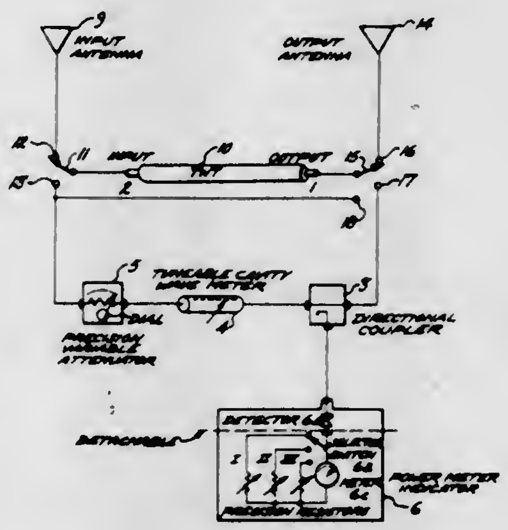

Apparatus for monitoring the performance of a traveling wave tube by disconnecting it from signal receiving and signal utilization means and simultaneously connecting a controlled calibrated feed-back test loop thereto and then adjusting the feed-back loop to obtain oscillation for subsequent registration upon a meter.

3,398,362
DISPLACEMENT MEASURING APPARATUS INCLUDING DIODE COMPENSATING RESISTANCES
Pierre Alais, 5 Rue Mathurin Regnier, Paris, France
Continuation of application Ser. No. 307,999, Sept. 10, 1963. This application Apr. 7, 1967, Ser. No. 629,332
Claims priority, application France, Sept. 20, 1962, 909,978; Apr. 2, 1963, 930,124
3 Claims. (Cl. 324—61)

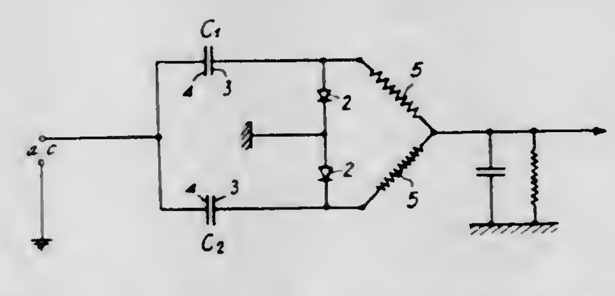

Apparatus for measuring rectilinear and angular displacements and vibration is disclosed as including a pair of symmetrical, geometrically identical condensers arranged to have their respective capacity values varied linearly and equally but in respective opposite directions in accordance with variations in the values to be measured.

3,398,363
EQUIPMENT TESTING SYSTEMS FOR VISUALLY INDICATING FAULTS OCCURRING AT ANY OF A NUMBER OF TESTING POINTS
Wilfrid Sinden Mortley, Great Baddow, Essex, England, assignor to The Marconi Company Limited, London, England, a British company
Filed Sept. 30, 1963, Ser. No. 312,488
Claims priority, application Great Britain, Oct. 2, 1962, 37,231/62
2 Claims. (Cl. 324—73)

A testing apparatus for testing and indicating the location of faults in a complex multi-circuit electronic equip-

ment wherein at each of a number of test points in the electronic equipment a device is provided which exhibits a change in output when a fault occurs at the test point. The outputs from the devices are cyclically and repeatedly sampled and the sampled outputs are applied as intensity modulation to a cathode ray tube, the electron scanning beam of which is scanned across the display screen in synchronism with the sampling of the testing devices in a television raster pattern of parallel lines so

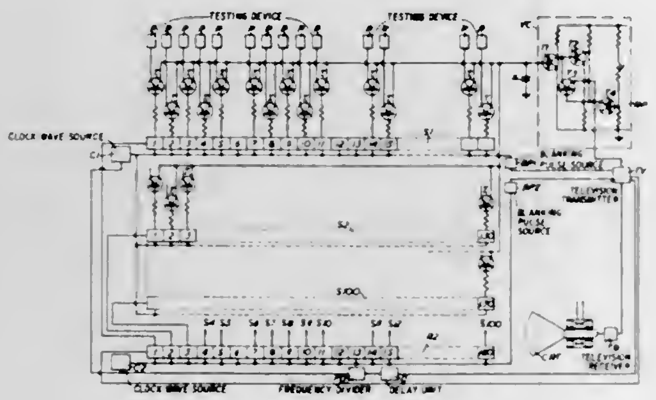

that a plurality of points, arranged in rows and columns, appear on the display screen. Each point is associated with a different one of the testing devices. The normal output of the testing devices is such that the points on the display screen are of low illumination except when a fault occurs which causes one of the testing devices to provide an increased output whereupon the spot with which that testing device is associated brightens up.

3,398,364
SPECTRUM ANALYZER HAVING MEANS FOR COMPARING THE FREQUENCY COMPONENTS OF A COMPLEX SIGNAL WITH A VARIABLE REFERENCE SIGNAL
Otto E. Rittenbach, Neptune, N.J., assignor to the United States of America as represented by the Secretary of the Army
Filed Mar. 12, 1965, Ser. No. 439,487
6 Claims. (Cl. 324—77)

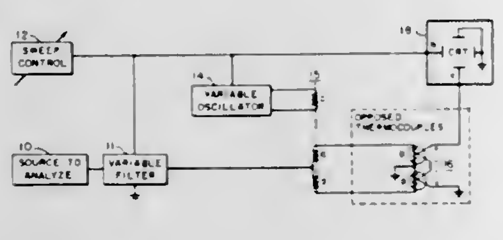

A spectrum analyzer for detecting and displaying the amount of energy contained in the various Fourier components of a complex signal. A variable filter, a variable oscillator and the horizontal deflection of a CRT are controlled by a sweep signal. The output frequency of the oscillator is equal to a frequency contained in the pass band of the filter. The signal to be analyzed is connected to the filter, the output of which is compared to the output of the oscillator such that when the frequency of the filter output is equal to the oscillator frequency and of the same phase a signal will be applied to the vertical deflection of the CRT. In a second embodiment the oscillator output is split into two channels and the signal in one channel is shifted ninety degrees. The output of the filter is compared to the oscillator in both channels and the resulting signals are added in quadrature. The sum signal is applied to the vertical deflection of the CRT to indicate the Fourier components of the input signal.

3,398,365
PANORAMIC SIGNAL DETECTOR AND DISPLAY
Shirly La Var Howard, Rolling Hills Estates, Calif., assignor to International Telephone and Telegraph Corporation, New York, N.Y., a corporation of Delaware
Filed Mar. 18, 1965, Ser. No. 440,806
13 Claims. (Cl. 324—77)

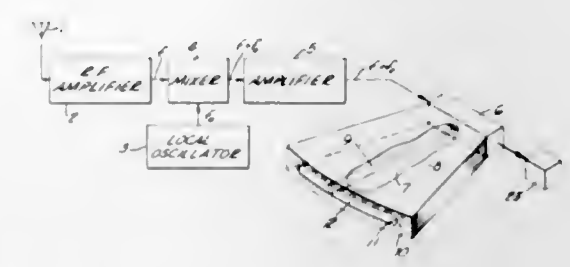

This disclosure describes a device for monitoring a frequency band of interest and capable of presenting a plurality of discrete indicia as functions of frequency, representative of all signals, CW, pulsed, FM or otherwise modulated and received within the said band of interest.

Heterodyne conversion of the signal band to the high microwave region (preferably in the vicinity of one centimeter or under) is provided to reduce overall size.

A frequency sensitive directive antenna (i.e., one which simultaneously forms a discrete beam narrow in at least a first coordinate corresponding to each discrete frequency at which a signal occurs in the said band) is provided. A scale is also provided and is placed such that the plural directive antenna beams impinge upon it in a geometric configuration not unlike the light beam galvanometer. The scale includes an electroluminescent surface which is caused to emit visible light wherever the said beams impinge upon it. Thus a display of signal presence and frequency is afforded when the luminescent scale is calibrated in accordance with the overall relationship of received frequency versus beam angle.

3,398,366
HIGHLY ACCURATE FREQUENCY MEASURING CIRCUIT
Otto L. Apfelbeck, Lima, Ohio, assignor to Westinghouse Electric Corporation, Pittsburgh, Pa., a corporation of Pennsylvania
Filed Jan. 29, 1965, Ser. No. 428,910
6 Claims. (Cl. 324—78)

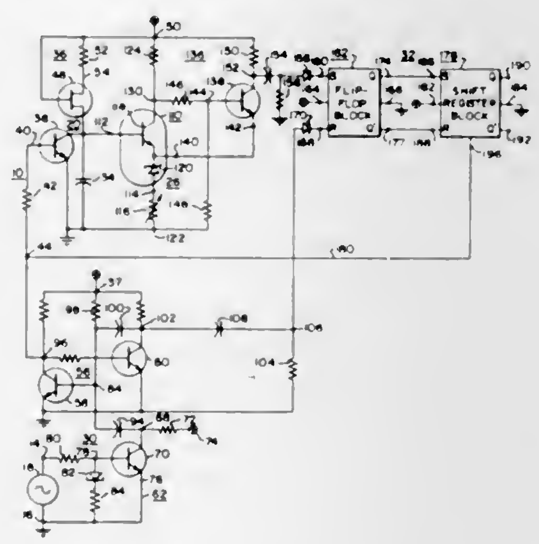

1. A frequency measuring circuit comprising a temperature stable ramp voltage generator, means for resetting said ramp voltage generator at successive substantially identical cycle points of an input cyclical signal, voltage comparison circuit means including means for establishing a reference voltage and solid state means for comparing the ramp voltage to the reference voltage, logic circuit means connected to respond to the last mentioned circuit means to provide an output indication when said ramp voltage exceeds said reference voltage level, said logic circuit means including a solid state flip-flop block having a set terminal connected to respond to said voltage comparison circuit means and a reset terminal connected to respond to said reset means to provide a temporary output indication of excessive ramp voltage, and a solid state shift register connected to respond to said flip-flop block and said reset means to provide a continuous output indicaton of the frequency level of said input signal.

3,398,367
REGISTER DEVICE WHEREIN INDICATOR IS RESTRAINED AGAINST UNDESIRABLE MOVEMENT
Eugene C. Benbow, Raleigh, N.C., assignor to Westinghouse Electric Corporation, East Pittsburgh, Pa., a corporation of Pennsylvania
Filed Dec. 31, 1964, Ser. No. 422,852
3 Claims. (Cl. 324—103)

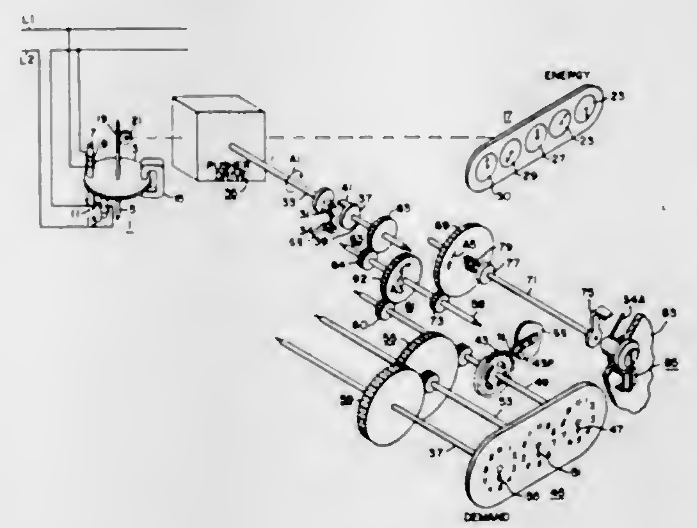

A register shaft carries a magnetic toothed wheel which rotates adjacent a permanent magnet. The magnet field restrains the wheel in any position to which it is rotated.

3,398,368
METER APPARATUS HAVING LOGARITHMIC RESPONSE TO CURRENT AND A LINEAR RESPONSE TO TEMPERATURE
Glenn S. Young, Shawnee Mission, and Arthur Laudel, Jr., Leawood, Kans., assignors to Power Monitors, Inc., Kansas City, Mo., a corporation of Missouri
Filed May 8, 1962, Ser. No. 193,153
18 Claims. (Cl. 324—104)

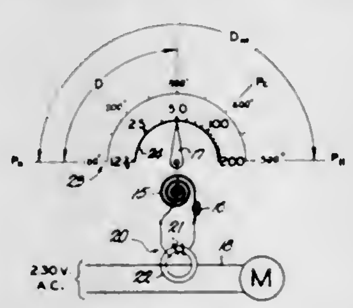

1. In combination with alternating current apparatus having an electrical line in which a variable load current flows depending on the load of said apparatus, the improvement which comprises means sensitive to the ambient temperature of said apparatus, said means comprising a thermal-mechanical transducer having a movble element whose position varies with temperature, and auxiliary means for so heating said transducer in accordance wtih the magnitude of said load current as to elevate the temperature of said transducer above ambient temperature by an amount substantially equal to

$$a \log I$$

where a is a constant and I is the load current, said last means comprising a resistive electrical circuit and a current transformer inductively coupling said circuit with said line, said transformer having a core which is saturable under the influence of said load current.

3,398,369
HIGH VOLTAGE METERING SYSTEM
Harold Pallatz, Flemington, N.J., assignor to Industrial Instruments, Inc., Cedar Grove, N.J., a corporation of New Jersey
Filed Mar. 30, 1965, Ser. No. 443,852
3 Claims. (Cl. 324—119)

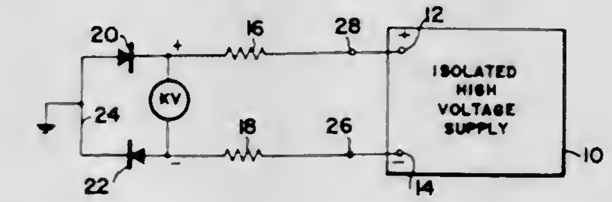

A metering system for effectively switching the terminals of a voltmeter connected across a high voltage direct current power supply without the necessity for utilizing mechanically operated switching elements for switching the voltmeter. The separate terminals of the voltmeter are respectively connected to the output posts of the high voltage power supply through separate multiplier resistors. A pair of diodes are connected across the terminals of the meter on the sides of the multiplier resistors which are farthest away from the high voltage power supply. A connection is provided between noncorresponding electrodes of the diodes to ground.

3,398,370
ULTRA HIGH GAIN TWO-TRANSISTOR REFLEX AMPLIFIER
Lloyd R. Crump, Silver Spring, Md., assignor to the United States of America as represented by the Secretary of the Army
Filed Dec. 16, 1964, Ser. No. 418,929
2 Claims. (Cl. 325—486)

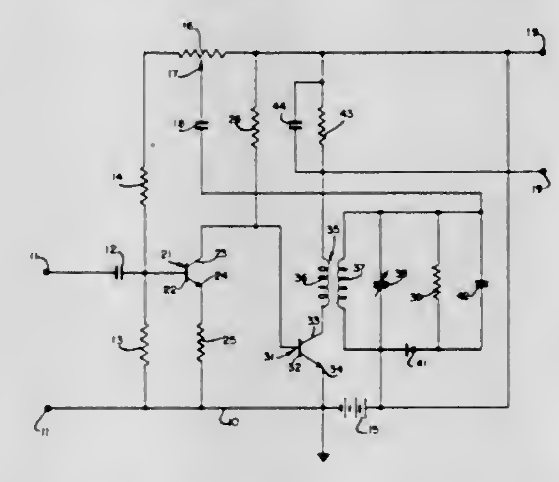

A solid state reflex amplifier providing high gain and low power supply drain and which responds to modulated and unmodulated signals to produce a response. The input goes to a two stage direct-coupled transistor amplifier with a diode detector at the amplifier output.

The amplifier is biased by a voltage divider circuit connected across a D.C. power supply. The diode detector circuit integrates the output of the amplifiers and feeds the integrated signal back to the input of the amplifier for further amplification.

3,398,371
SURGE RELAY CIRCUIT
John T. Lamb, Mansfield, Ohio, assignor to The Tappan Company, Mansfield, Ohio, a corporation of Ohio
Filed Jan. 4, 1966, Ser. No. 518,626
4 Claims. (Cl. 328—9)

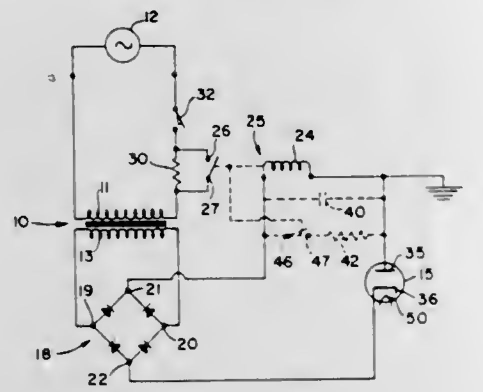

A circuit for applying full voltage to a magnetron microwave oscillator tube in steps consisting of a resistance element for limiting the application of voltage to a first level, and a relay for sensing current buildup in the magnetron tube and for shunting the resistance element when a predetermined current flows through the tube.

3,398,372
SYNCHRONIZED, MAXIMUM EFFECTIVE FREQUENCY, WAVE CONVERSION SYSTEM EMPLOYING TIME DELAY PULSE GENERATING AND SYNCHRONIZING MEANS, AND COMPONENT OF SYSTEM
William I. L. Wu, Westport, Conn., and Leo A. Giangarra, Orange, Calif., assignors to The Singer Company, New York, N.Y., a corporation of New Jersey
Filed Feb. 15, 1965, Ser. No. 432,580
2 Claims. (Cl. 328—28)

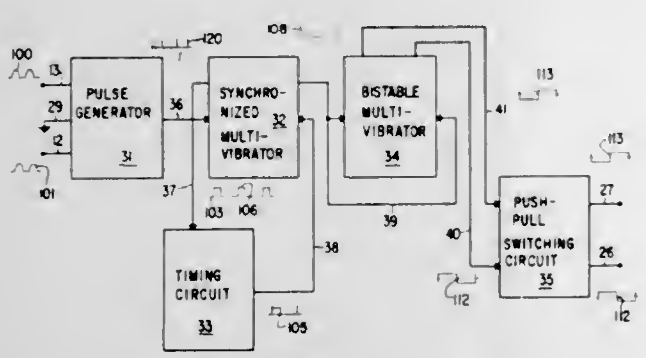

A polarity switch comprising a pair of cathode connected silicon controlled rectifiers each connected in parallel with one of a pair of anode connected diodes is controlled by an adaptive wave (frequency) converter comprising a wave conversion system. The wave conversion system may be connected either across the switch or across the source of power to the polarity switch and a load. The converter input is connected to a pulse generator. A synchronized multivibrator is controlled by pulses sharpened by the pulse generator and by a timing circuit to provide pulses at a sub-multiple of the pulse frequency from the pulse generator, which is below a frequency determined by the timing circuit. The timing circuit includes a delay circuit responsive to pulses from one output of the synchronized multivibrator to generate a ramp voltage in unijunction transistor circuit which, after a predetermined time delay, actuates a transistor pulse generator. Then the latter pulse operates the synchronized multivibrator to its reset state. The next pulse from the first pulse generator operates the synchronized multivibrator to initiate a timing period and to operate the bistable multivibrator which controls a push-pull switching circuit to provide reversed polarity outputs to the control electrodes of the controlled rectifiers in the polarity switch.

3,398,373
PULSE TRAIN MEDIAN ERROR DETECTOR AND COMPENSATOR
Raymond A. Caswell, Tujunga, Calif., assignor to Aerojet-General Corporation, El Monte, Calif., a corporation of Ohio
Filed Dec. 21, 1964, Ser. No. 419,973
6 Claims. (Cl. 328—163)

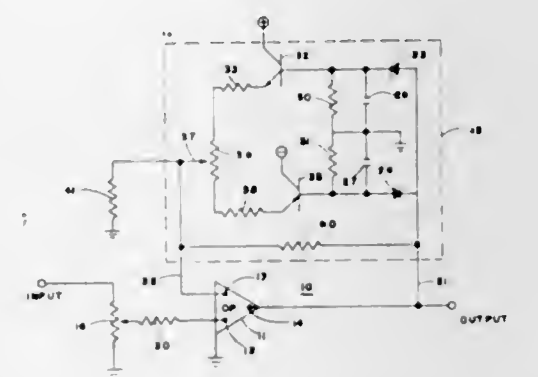

This invention relates to communications receivers and more particularly to circuits for detecting and eliminating unwanted shifts in the reference voltage level of binary coded information. These circuits include basically an operational amplifier having a pair of input terminals, one which inverts signals applied thereto and the other which does not, and a single output terminal. Coupled between the output and the inverting input terminal is a feedback network having one positive and one negative peak detector and a summing circuit which algebraically combines the output of the two peak detectors for application to the inverting input of the operational amplifier. The circuit is capable of detecting the deviation in the median level of a pulse train by the feedback circuit and by adding this summation signal in inverted form to the original pulse train, the median deviation is cancelled. The feedback network also serves to limit noise present in the signal thereby improving the signal quality of the outputs as well as eliminating the median shift.

3,398,374
TIME GATED FILTER
Maxime G. Kaufman, Camp Springs, Md., assignor to the United States of America as represented by the Secretary of the Navy
Filed Feb. 26, 1965, Ser. No. 435,755
3 Claims. (Cl. 328—165)

A very narrow band, time-gated filter which introduces a minimum of phase shift. A first channel is utilized to produce pulses of a frequency equal to the frequency of an input signal which may be lost in a large amount of broad band noise or harmonic components; and a second channel generates pulses at predetermined time delays from the pulses generated in the first channel so that the pulses generated in each of the two channels coincides at a coincidence means only when the input signal is of the specific frequency sought to be filtered and a filter out-

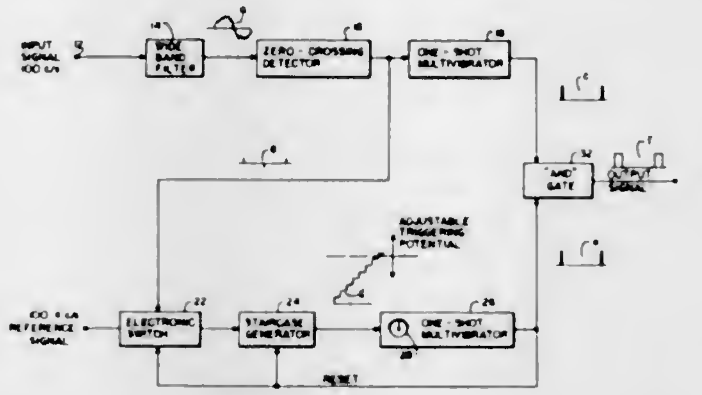

put signal is generated which has a frequency equal to the frequency of the input frequency sought to be filtered from the accompanying noise.

3,398,375
APPARATUS AND METHOD FOR SELECTIVELY PRODUCING HIGH CURRENT OF HIGH ENERGY BEAMS OF ACCELERATED CHARGED PARTICLES
Jacob Haimson, East Palo Alto, Calif., assignor to Varian Associates, Palo Alto, Calif., a corporation of California
Filed Sept. 28, 1964, Ser. No. 399,930
8 Claims. (Cl. 328—233)

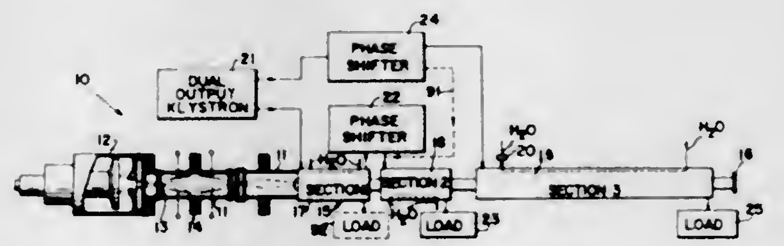

In a linear particle accelerator having at least three accelerating sections, a dual output klystron provides input power into the first section and into the second or third sections depending on whether a high current or high energy output is desired. In the high current mode, the input power is coupled into the second section through a phase shifting switching circuit with the residual energy remaining at the output of the first section being dissipated in an external load. In the high energy mode, the phase shifting switching circuit couples the input power into the third section with the residual energy remaining at the output of the first section being coupled through a second phase shifting switching circuit into the second section instead of the load. A heater is provided in the cooling lines of the third section to control the temperature and electrically decouple the third section during high current operation in order to effect a zero net energy transfer from the particle beam to the waveguide section as the beam passes therethrough.

3,398,376
RELATIVISTIC ELECTRON CYCLOTRON MASER
Jay L. Hirshfield, 85 Blake Road, Hamden, Conn. 06514
Continuation-in-part of application Ser. No. 569,713, Aug. 2, 1966. This application Dec. 11, 1967, Ser. No. 693,045
7 Claims. (Cl. 330—4.3)

An electron cyclotron maser high frequency generator/amplifier utilizing stimulated emission of cyclotron radiation comprising an electron gun whose electron beam passes through a resonator. A magnetic field coaxial with the electron beam, and a twisted D.C. electric or magnetic field, upstream of the resonator, acts on the beam to give a spiral motion to the individual electrons. The

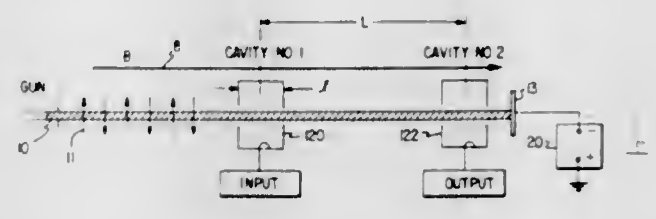

strength of the magnetic field may be greatest at the resonator. As an amplifier, a second resonant cavity may be added downstream of the first resonator and is subject to the same axial magnetic field strength as the first.

3,398,377
MULTIPLE-FREQUENCY GENERATORS
William Howard Hill, Yonkers, N.Y., assignor to Litton Systems, Inc., Beverly Hills, Calif.
Filed Aug. 19, 1963, Ser. No. 302,944
6 Claims. (Cl. 331—16)

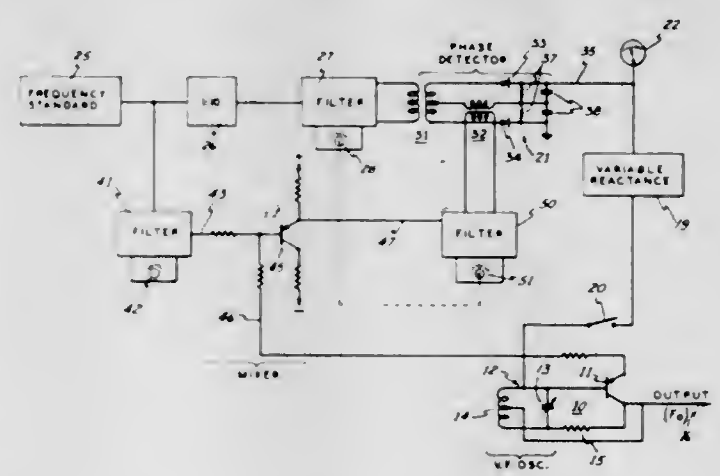

1. In a frequency synthesizer for generating a plurality of output frequencies, in combination,
 a variable-frequency oscillator adjustable over the range of desired output frequencies,
 means for generating a series of fixed lower frequencies f spaced by an amount equal to the desired spacing between the respective output frequencies,
 a selectively adjustable filter connected to said means for selecting any desired frequency f,
 means for generating a second frequency which differs from the desired output frequency by the selected frequency f,
 a mixer for combining the second frequency with the output frequency of said variable-frequency oscillator, and
 means connected to said filter and to said mixer for locking in said variable-frequency oscillator at the desired output frequency.

3,398,378
PHASE SHIFT FREQUENCY DIVIDERS
David G. Olson, W. 219 S. 7216 Crowbar Drive, Muskego, Wis. 53150
Continuation of application Ser. No. 445,537, Apr. 5, 1965. This application Feb. 7, 1968, Ser. No. 703,794
4 Claims. (Cl. 331—76)

A device for dividing the frequency of an AC signal, utilizing a single amplifying device, and employing phase-cancellation to eliminate every nth input signal

pulse, such phase-cancellation occurring by taking from the amplifying device, a signal which has zero phase difference relative to the input signal, shifting it in phase by means of a phase-shift network, and applying the shifted signal back to the input where it may at least

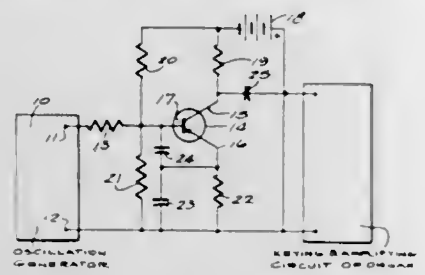

partially cancel out every *n*th input pulse due to the phase-difference between the input and the shifted signal fed back, and permitting control over the output of the amplifying device, which is 180 electrical degrees different, in terms of wave shaping without affecting the ability of the device to divide the frequency.

3,398,379
LASER DEVICE WITH TOTAL INTERNAL REFLECTION PROPAGATION DIRECTION SELECTION
Stuart D. Sims and Richard T. Daly, Huntington, N.Y., assignors, by mesne assignments, to Control Data Corporation, South Minneapolis, Minn., a corporation of Minnesota
Filed Jan. 27, 1964, Ser. No. 340,483
7 Claims. (Cl. 331—94.5)

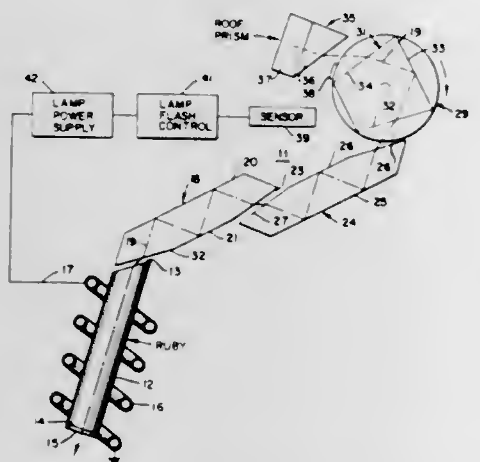

The present invention relates to lasers and more particularly to lasers having an optical system employing total internal reflection of a pair of parallel surfaces at substantially the critical angle, relative to a laser beam for causing the light amplified or generated by the laser to be highly directional. The selectivity of the apparatus with respect to direction of propagation may be employed simply to obtain a highly directional output beam or in other instances may be employed in conjunction with a rotating reflector in a Q-switched laser to achieve a faster switching time and hence a greater concentration of energy in a single laser pulse.

3,398,380
AMPLITUDE STABILIZED CRYSTAL OSCILLATOR
Douglas Frank George Dwyer, Ewell, England, assignor to The Marconi Company Limited, London, England, a British company
Filed June 21, 1966, Ser. No. 559,131
Claims priority, application Great Britain, Aug. 16, 1965, 34,956/65
6 Claims. (Cl. 331—109)

A transistor driven piezo-electric crystal oscillator is disclosed herein in which the amplitude of oscillation is automatically maintained at a desired predetermined value by means of a D.C. control voltage which is developed to be dependent upon the produced oscillation amplitude of the oscillator, the control voltage being applied to control the effect of supply voltage to the oscillator while the base-emitter voltage of the driving transis-

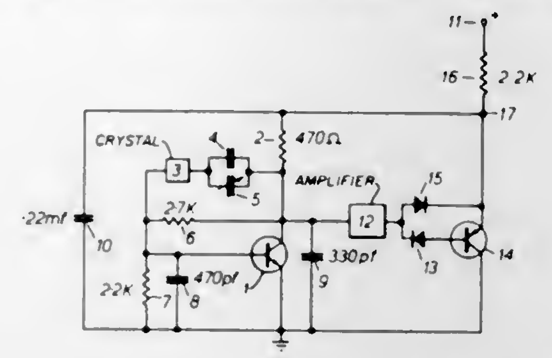

tor is maintained substantially unchanged. In a specific embodiment, oscillations from the oscillator are rectified and applied to control the impedance of a second transistor which forms part of a voltage divider chain, a tap upon which is employed as the supply voltage source for the oscillator.

3,398,381
CONTROL CIRCUIT FOR RESTRICTING INSTANTANEOUS PEAK LEVELS OF AUDIO SIGNALS
Emil Torick, Norwalk, and Arthur Kaiser, Trumbull, Conn., assignors to Columbia Broadcasting System, Inc., New York, N.Y., a corporation of New York
Filed Mar. 22, 1965, Ser. No. 441,464
13 Claims. (Cl. 332—19)

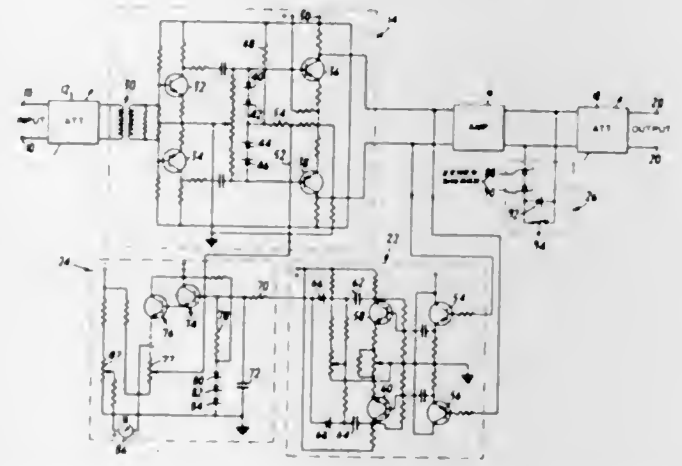

Automatic circuit means for restricting instantaneous peak levels of audio signals to a predetermined value is described. A Zener diode clipper, which responds instantaneously to short peaks to limit their maximum amplitudes to a predetermined level, such as that necessary for 100% modulation, is preceded by a limiting circuit of the automatic gain control type which has a response time long relative to the clipper but still short with respect to conventional AGC circuits. The slower circuit responds to signal excursions of a predetermined duration, e.g., 2 to 3 milliseconds, which if clipped would introduce audible distortion. The recovery time of the slower limiting circuit is made approximately equal to the syllabic rate of speech to avoid audibly detectable distortion.

3,398,382
CAPACITIVELY DRIVEN MICROWAVE MODULATORS
Richard V. Jones, Arlington, and Alan B. Smith, Belmont, Mass., assignors to the United States of America as represented by the Secretary of the Air Force
Filed July 28, 1965, Ser. No. 475,615
9 Claims. (Cl. 332—29)

An ultra high frequency modulator to be located at a

point of ferromagnetic resonance along a waveguide including spherically shaped ferromagnetic material and

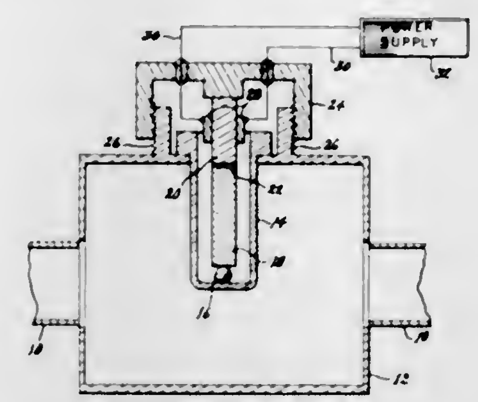

means for applying a strain to the sphere sufficient to cause a shift in ferromagnetic resonance.

3,398,383
MICROWAVE MODULATOR USING ANISOTROPIC EFFECTS OF FERROMAGNETIC RESONANCE IN SINGLE CRYSTALS
Richard V. Jones, Arlington, and Alan B. Smith, Belmont, Mass., assignors to the United States of America as represented by the Secretary of the Air Force
Filed July 28, 1965, Ser. No. 475,616
3 Claims. (Cl. 332—29)

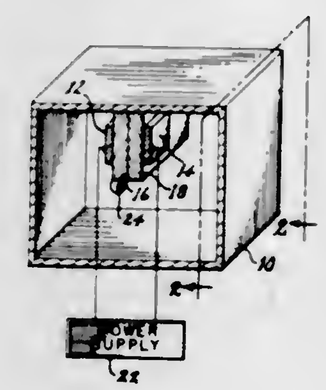

Two piezoelectric crystals attached back-to-back with reversed senses of polarization placed in a microwave cavity. A twisting motion is produced when an electric field is applied to the composite device, causing a change in the angle that the anisotropy field makes with the crystalline axis which will accordingly shift the ferromagnetic resonance.

3,398,384
MAGNETIC PROXIMITY SWITCH
Leonard Piekarski, Pomona, Calif., assignor of one-fourth each to Irving B. Collins, Los Angeles, Veronica Whitesides, Culver City, T. A. Smith, Long Beach, and Carroll E. Isham, Buena Park, Calif.
Filed Mar. 4, 1966, Ser. No. 531,878
3 Claims. (Cl. 335—207)

1. A proximity device comprising at least one magnet mounted to swing between a normal position of essential alignment with an ambient field and a deflected position in response to movement of a body of magnetic material into the vicinity of the magnet, and magnetically actuated electrical switching means positioned near said magnet and operable magnetically by the field of said magnet to open or close an electrical circuit upon deflection of said magnet from said normal position, said magnet having a North-South axis which in said normal position is essentially aligned with said ambient field, said switching means including a magnetically actuated reed switch located near said magnet and having reed contacts disposed essentially

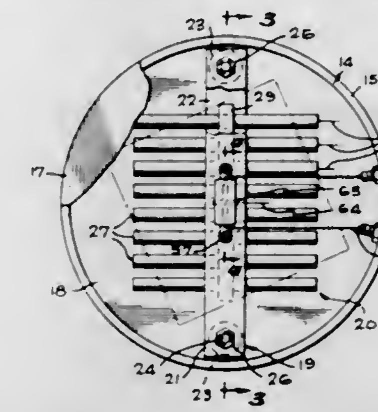

transversely of said North-South axis of the magnet when the magnet is in said normal position.

3,398,385
MAGNET STRUCTURE WITH AN AIR GAP OF VARIABLE WIDTH
Erich Grünwald, Erlangen, Germany, assignor to Siemens Aktiengesellschaft, Berlin-Siemensstadt, Germany
Filed Jan. 22, 1965, Ser. No. 427,333
Claims priority, application Germany, Jan. 22, 1964, S 89,166, S 89,167
10 Claims. (Cl. 335—210)

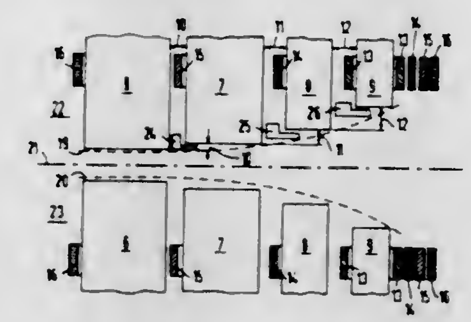

Magnet structure includes a pair of pole shoes spaced from each other by an elongated air gap of varying width, each of the pole shoes including a plurality of blocks at least partly spaced from each other in the longitudinal direction of the air gap and being spaced successively increasing distances from the longitudinal axis of the air gap, the spacing between successive blocks corresponding approximately to the increase in the distance of the blocks respectively from the longitudinal axis of the air gap, and excitation winding means cooperating with the pole shoes so as to provide uniform magnetic induction along substantially the entire length of the air gap.

3,398,386
ELECTRICAL SYNCHRO HAVING ONE SURFACE OF THE ROTOR INCLINED
Frederick A. Summerlin, 58 Townsend Lane, Harpenden, Hertfordshire, England
Filed Apr. 20, 1966, Ser. No. 544,002
Claims priority, application Great Britain, Apr. 20, 1965, 16,607/65; May 11, 1965, 19,900/65
8 Claims. (Cl. 336—135)

This invention relates to an electrical synchro wherein the stator has pairs of poles wound to produce no axial flux flow and the rotor is an unwound iron body of cylin-

drical shape having one end surface inclined to the rotor axis. Rotation of the rotor results in a constant sum of rotor areas being exposed to opposite poles.

3,398,387
INORGANIC BRUSH AND SLIP-RING ASSEMBLY
George E. Wendell, Blacksburg, Va., assignor to Litton Precision Products, Inc., Beverly Hills, Calif., a corporation of Delaware
Filed Mar. 16, 1966, Ser. No. 534,912
7 Claims. (Cl. 339—5)

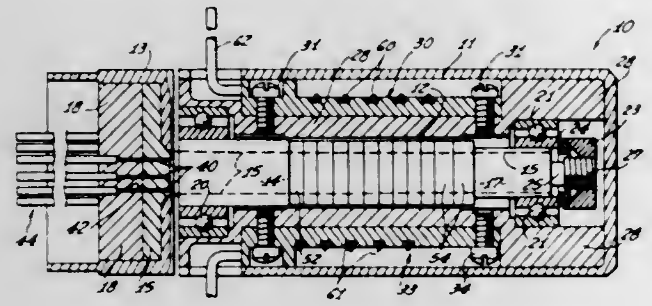

A brush and slip-ring assembly of inorganic composition, the slip-ring assembly including a plurality of identical disc-like elements stacked adjoining one another, each element being provided with a plurality of apertures and a preformed radial channel in the outer surface, the channel communicating with one of the apertures and the outer periphery of the element, the apertures of adjacent elements being in registration, a plurality of conductors free of organic insulation extending through the aligned apertures with one conductor extending through each radial channel, circumferential grooves at the junction of adjacent elements are provided with conductive contacting surfaces in electrical contact with the corresponding conductor, the brush assembly having one brush in contact with each conductive surface.

3,398,388
UNIVERSAL ELECTRICAL CONNECTOR
Welchien Chow, Park Forest, Ill., assignor to Amphenol Corporation, Broadview, Ill., a corporation of Delaware
Filed Sept. 2, 1966, Ser. No. 577,037
13 Claims. (Cl. 339—49)

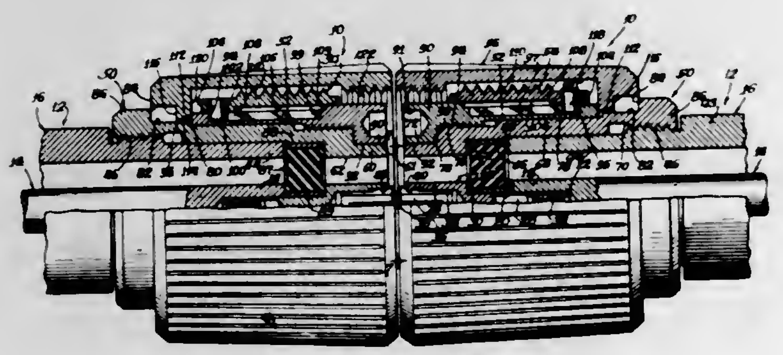

1. A connector part of the character disclosed comprising a conductor having an end contact surface, a male element movable between an active position axially outwardly beyond said contact surface and an inactive position axially inwardly removed from the contact surface, and an actuator member operative on actuation thereof for moving the male element between its said positions, and operative, when the male element is in its inactive position, for connection with the male element in active position of another like connector part.

3,398,389
FLASH UNIT
Artur Fischer, 133 Grunmettstetter Str., 7241 Tumlingen uber Horb, Germany, and Gerhard Porlein, Tumlingen uber Horb, Germany; said Porlein assignor to said Fischer
Filed Oct. 19, 1966, Ser. No. 587,912
Claims priority, application Germany, Nov. 11, 1965, F 29,101
10 Claims. (Cl. 339—65)

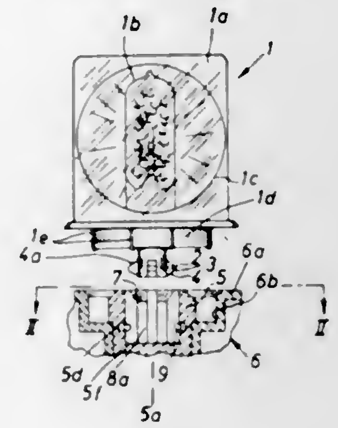

A flash unit with an indexible socket which defines a recess for the plug of a multiple flash bulb holder and is provided with grooves communicating with the recess and receiving teeth of the plug when the latter is inserted into the recess. The outer end of the recess is bounded by a conical internal surface which tapers inwardly and guides the teeth into alignment with grooves when the multiple flash bulb holder is turned with reference to the socket or vice versa while the leading edge faces of teeth abut against the conical internal surface.

3,398,390
SPRING LOCK ELECTRICAL CONNECTOR
Glen F. Long, Dallas, Tex., assignor to General Electric Company, a corporation of New York
Filed July 18, 1966, Ser. No. 565,967
3 Claims. (Cl. 339—91)

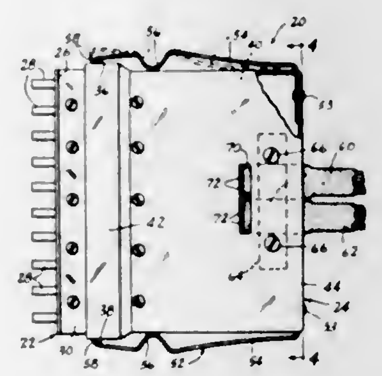

An electrical connector plug for a multi-contact connector having spring mounted finger locking members with polarizing features and means for clamping the cable to the housing with the elimination of external clamps, and the provision of a sighting window to determine the degree of penetration on the cable sheath in the housing structure.

3,398,391
HERMETICALLY SEALED CONNECTORS
Alexander R. Brishka, 14 Sophia St., Mamaroneck, N.Y. 10543
Filed Aug. 10, 1967, Ser. No. 659,800
7 Claims. (Cl. 339—94)

A hermetically sealed panel receptacle comprising a tubular metallic body with means for attachment to the panel, a plastic insulator in interference fit in the body, an annular slot in the insulator receiving one end of the body, a center conductor through the insulator with a

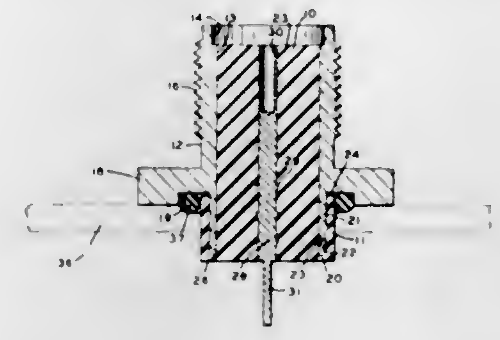

labyrinth seal between the insulator and the body and between the insulator and the conductor.

3,398,392
SUBMERGIBLE ELECTRICAL CONNECTOR
John K. Henderson, 4012 E. 41st Place, Tulsa, Okla. 74115
Continuation of application Ser. No. 483,171, Aug. 27, 1965. This application Sept. 27, 1967, Ser. No. 671,544
8 Claims. (Cl. 339—117)

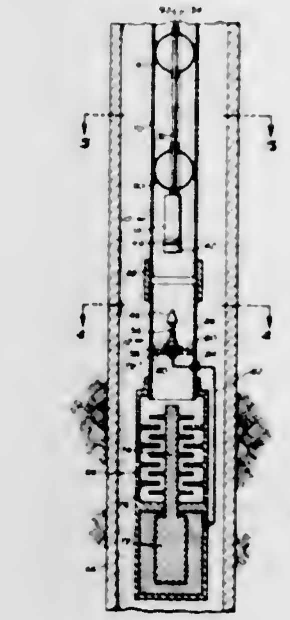

This invention relates to a connector device for making electrical connection in a conductive liquid environment. The device consists of two portions, the first portion including a liquid containing tubular housing closed at one end. A first tubular contacting element of less diameter and length than the housing is coaxially supported at one end within said tubular housing, and a second tubular contact element of less diameter and length than the first tubular contacting element is coaxially supported at one end in the tubular housing. A rupturable membrane normally closes the open end of the tubular housing and the housing is filled with a nonconductive liquid. The other portion of the connecting device includes a vertical first contacting element of elongated cylindrical configuration having means at one end for engaging and puncturing the rupturable membrane. An insulating sleeve surrounds all but the engaging portion of the cylindrical element and a tubular second contacting element of length less than the cylindrical element is coaxially received about the insulating sleeve. The device is configured to make electrical connection in a liquid environment by moving one or the other of the portions vertically to contact the other, in the arrangement wherein the rupturable membrane is punctured and the second connecting member extends within the tubular housing of the first member, so that the second element of the first member engages the exposed end portion of the second member cylindrical element and in like manner the second contacting element of the second member engages the first tubular contacting element of the first portion, both of the contacting elements of each member being surrounded by the nonconductive liquid.

3,398,393
DEVICE FOR CLAMPING WIRES TO TERMINALS
William A. Cochrum, Roselle, Ill., assignor to The Fastron Company, Franklin Park, Ill., a corporation of Illinois
Filed Sept. 9, 1966, Ser. No. 578,254
4 Claims. (Cl. 339—246)

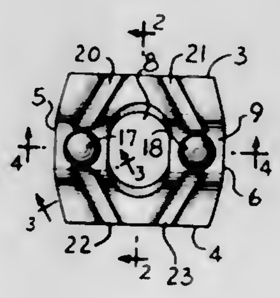

1. A clamp for a terminal assembly comprising a plate-like body having a hole extending therethrough, said body having a region that lies between two opposed edges of the body and extends generally from one of two other opposed edges to the other but is interrupted by said hole, said body being bent relative to said region to provide a generally convex side and a generally concave side and forming clamping portions on opposite sides of said region, said clamping portion defining generally an obtuse angle with respect to said region, said concave side at said clamping portions having ribs that extend to said first mentioned two opposed edges and said convex side at said region having raised axial beads on either side of said hole, each clamping portion having two ribs, one rib extending substantially from each bead.

3,398,394
MARINE SEISMIC ARRAY DEPTH CONTROL
William H. Luehrmann, Dallas, and William H. Parker, Richardson, Tex., assignors to Teledyne Industries, Inc., Geotech Division, a corporation of California
Filed Dec. 9, 1966, Ser. No. 600,588
5 Claims. (Cl. 340—7)

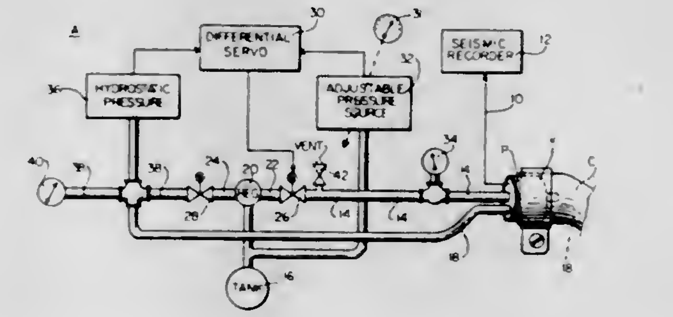

A seismic-streamer towing and depth control apparatus which is improved by simplifying the components which are immersed outside the towing vessel to include only several plastic tubes, one inside the other, and a sleeve

smoothly coupling the larger tube to the streamer for very quiet towing; and further improved by placing the remaining depth-control components all inside the vessel where their bulk is no handicap, these latter components comprising a source of gas pressure, an adjustable regulator, and ordinary pressure-differential responsive apparatus including servo means operating a control valve for introducing gas into the larger tube to cause the hydrostatic pressure measured through the smaller tube to approach the pressure from the adjustable regulator, the latter pressure representing the desired towing depth.

3,398,395
SEISMIC AMPLIFIER SYSTEM WITH PREPROGRAMMED GAIN CONTROL
Phillip W. Ward, Dallas, Tex., assignor to Texas Instruments Incorporated, Dallas, Tex., a corporation of Delaware
Filed Apr. 28, 1966, Ser. No. 545,985
2 Claims. (Cl. 340—15.5)

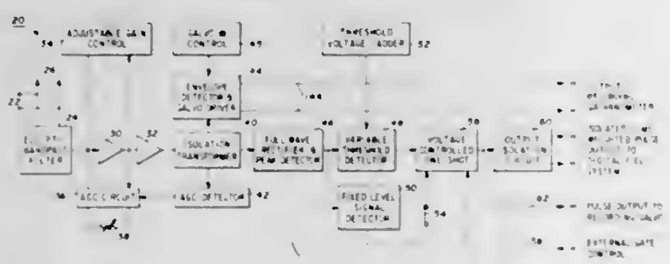

A seismic sensor of waterborne energy including a passive band-pass filter designed to pass only energy in a frequency range characteristic of the energy to be detected to an amplifier having a relatively slow acting automatic gain control which initially amplifies the energy, then decreases in gain by means of a feedback circuit so as to essentially terminate the output of the amplifier system after a short period of time. A rectifier at the output of the amplifier produces an analog output having an initial sharp transition and an exponential decay. The output of the amplifier system is also applied to a pulse-forming circuit which initiates a pulse when the rectified output of the amplifier system exceeds a selected threshold.

3,398,396
DIVERSITY SEISMIC RECORD STACKING METHOD AND SYSTEM
Peter Embree, Farmers Branch, Tex., assignor to Texas Instruments Incorporated, Dallas, Tex., a corporation of Texas
Filed June 13, 1966, Ser. No. 557,126
6 Claims. (Cl. 340—15.5)

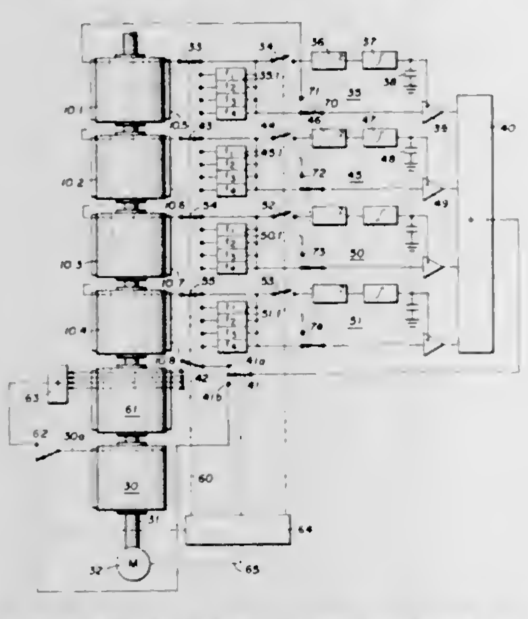

Disclosed is a method of enhancing the signal-to-noise ratio in seismic records, which comprises the steps of generating at a detector location seismic traces resulting from a plurality of closely spaced seismic shots, amplifying each trace as a function of the inverse ratio of the noise power in said trace as compared to another trace, and then combining said modified traces.

3,398,397
SIGNAL DEVICE FOR WORN TIRE TREADS
William H. O'Connell, 1 Danny Lane, Chappaqua, N.Y. 10514
Continuation-in-part of application Ser. No. 266,841, Mar. 21, 1963. This application Feb. 25, 1966, Ser. No. 534,280
12 Claims. (Cl. 340—52)

1. Signalling apparatus capable of differentiating between good and bad tire treads comprising a ground device adapted to be located in the path of travel of a tire on an automobile, a signalling device, and an electrical circuit connecting said ground device and said signalling device, said circuit comprising a first electrical conductor constituted of a wire electrically connected at one end to said signalling device, and a second electrical conductor contained in said ground device so as to extend across such path of travel of an automobile tire and electrically connected to said signalling device and to the other end of said first conductor, said second conductor being composed of a plurality of portions of conductive material embedded in readily compressible, resilient material and said portions having a maximum dimension less than the width of the tread cavities in an automobile tire, said portions of conductive material being constructed and arranged in said resilient material to tend to modify the electrical circuit to operate said signalling device when an automobile tire having a worn tread passes transversely over said second conductor in said ground device, and said material in which said portions of conductive material are embedded having such compressibleness and resiliency that when a good tire passes transversely over said second conductor those of said portions of conductive material underlying the tread cavities in the good tire will not have sufficient pressure exerted thereon to effect said modification of the electrical circuit to operate said signalling device.

3,398,398
LOW PRESSURE INDICATOR FOR VEHICLE TIRES
Oscar Vernon Johnson, 420 E. Pearl St., Geneseo, Ill. 61254
Filed Oct. 4, 1965, Ser. No. 492,398
9 Claims. (Cl. 340—58)

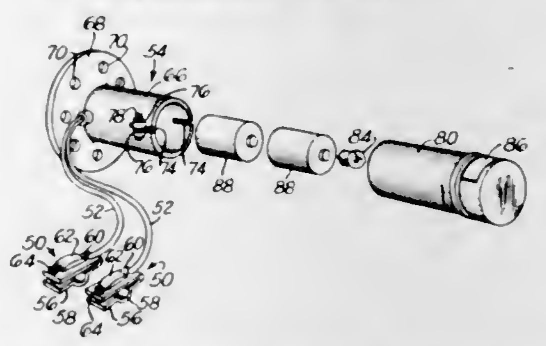

A low pressure indicator for vehicle tires comprising a light adapted to be mounted on a vehicle wheel. The light is normally in an off condition but is turned on by a pressure sensitive switch. The switch is mounted on a valve stem and is normally held away from the inner rim of the wheel by the pressure within the tire, however the switch is caused to contact the rim if pressure within the tire drops.

3,398,399
VEHICLE SEQUENTIAL SIGNALING SYSTEM
Eugene W. Brock, Anderson, Ind., assignor to General Motors Corporation, Detroit, Mich., a corporation of Delaware
Filed Sept. 23, 1965, Ser. No. 489,532
4 Claims. (Cl. 340—82)

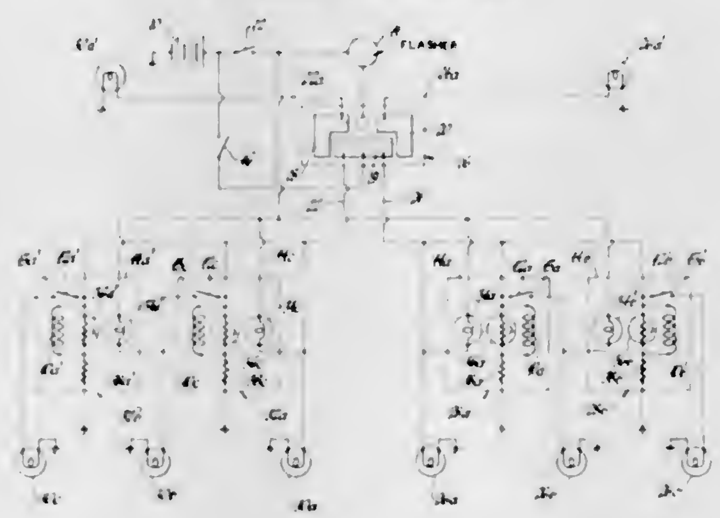

1. A circuit for sequentially energizing first and second load devices comprising a source of voltage,
delay means comprising a light dependent resistor and a fixed resistor connected in series across said first load device,
relay means connected in parallel with said light dependent resistor,
a lamp for illuminating said light dependent resistor, said lamp and said light dependent resistor being enclosed in a light tight compartment,
said lamp being connected in series with said first load device,
switching means for shunting said lamp and connecting said first load device directly to said source,
said relay means including contact means connecting said second load device in parallel with said first load device when said relay is energized.

3,398,400
METHOD AND ARRANGEMENT FOR TRANSMITTING AND RECEIVING DATA WITHOUT ERRORS
Heinrich Rupp, Stuttgart-Botnang, and Albert Norz, Stuttgart-Zuffenhausen, Germany, assignors to International Standard Electric Corporation, New York, N.Y., a corporation of Delaware
Filed July 26, 1963, Ser. No. 297,785
Claims priority, application Germany, Aug. 2, 1962, St 19,560
1 Claim. (Cl. 340—146.1)

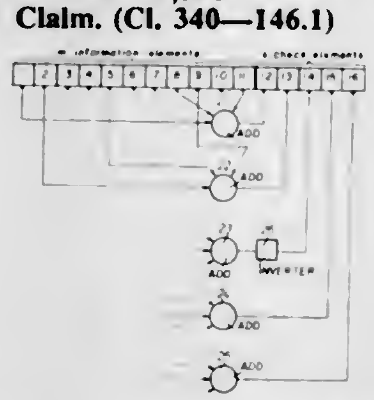

Error determinative data transmission is accomplished by the generation of a plurality of check elements from the information elements with one or more of the check elements being inverted. At the receiving end, selective

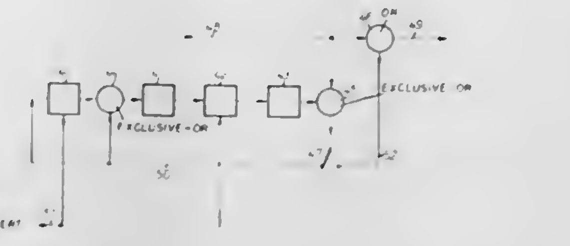

inversion of check signals generated from the transmitted information and check elements allows detection of cyclic code synchronizing errors.

3,398,401
CODE COMMUNICATION SYSTEM
Henry C. Sibley, Spencerport, and Walter G. Pettitt, Rochester, N.Y., assignors to The General Signal Corporation, Rochester, N.Y., a corporation of New York
Filed Oct. 26, 1964, Ser. No. 406,408
9 Claims. (Cl. 340—147)

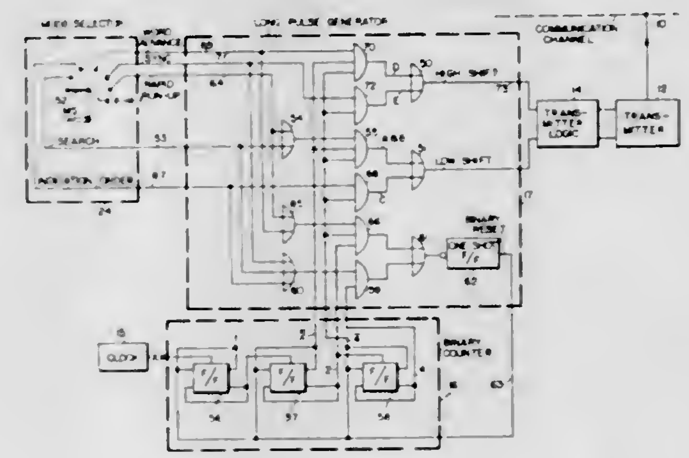

A two way multiple station code communication system wherein roll call and control pulses are transmitted from a control office at the same carrier frequency by a single transmitter, the roll call pulses being distinguished by being of selected multiple bit duration in combination with a selected multiple bit off period. These roll call pulses and associated time spaces convey coded messages because of the selected duration of these intervals. Such coding conveys to the field station a mode for the system such as a rapid run-up roll call, a search mode, an indication mode, and a word advance mode.

3,398,402
SIMPLIFIED DATA-PROCESSING SYSTEM
Serge Delaigue, Chaville, and Rene Rauche, Orly, France, assignors to International Standard Electric Corporation, New York, N.Y., a corporation of Delaware
Filed Sept. 27, 1965, Ser. No. 490,546
Claims priority, application France, Oct. 2, 1964, 990,131, Patent 1,421,389
3 Claims. (Cl. 340—172.5)

A data switching unit exchanges information between two bistable reigsters. Two "exclusive OR" operators are used in the exchange which takes place in three stages:

(a) The first operator makes the "sum modulo two" of the operands stored in the two registers so as to record the result of the operation in one of them;

(b) The second operator repeats the same operation so as to record the result in the other register;

(c) The first operator repeats once more the same operation so as to record the result in the first register.

During these successive transformations some of the terms get eliminated; so that the operand, stored initially in the

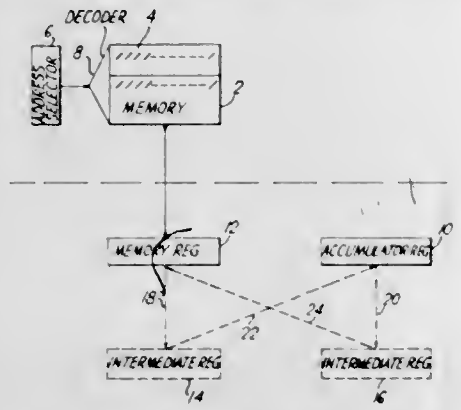

first register happens to be finally in the second register, and vice versa.

3,398,403
DATA PROCESSING CIRCUIT
Bernard Ostendorf, Jr., Stamford, Conn., assignor to Bell Telephone Laboratories, Incorporated, New York, N.Y., a corporation of New York
Original application Apr. 21, 1958, Ser. No. 729,717. Divided and this application Jan. 15, 1962, Ser. No. 166,133
11 Claims. (Cl. 340—172.5)

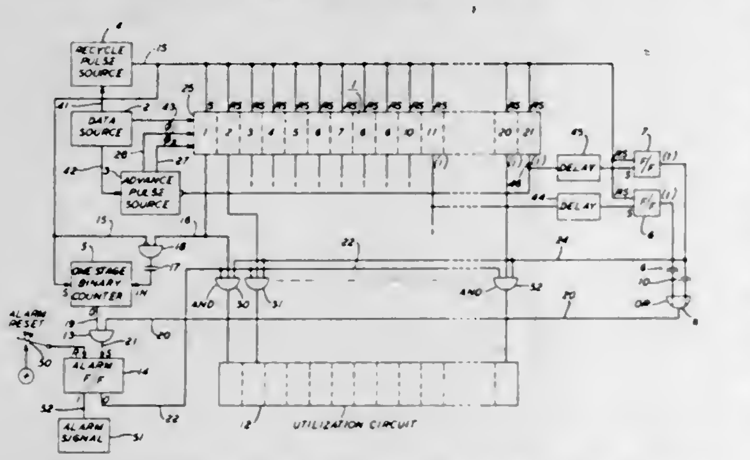

1. In a communication switching system the combination comprising a plural stage shift register having input, output, and advance terminals, each of said stages having set, reset and output terminals, a serial message data source connected to said shift register input terminal, a recycle pulse source connected to certain of said set and reset terminals and controlled by said data source for establishing a discrete initial pattern of electrical states of said stages of said shift register, an advance pulse source controlled by said data source and connected to said shift register advance terminals, and bistable circuit means connected to certain of said shift register stage output terminals and responsive to the initial change of state of said certain stages subsequent to the occurrence of a pulse from said recycle pulse source for indicating the position of said serial message data in said shift register.

3,398,404
MULTIPLE MATCH RESOLUTION IN ASSOCIATIVE STORAGE SYSTEMS
Edwin S. Lee III, Altadena, Calif., assignor to Burroughs Corporation, Detroit, Mich., a corporation of Michigan
Filed July 30, 1962, Ser. No. 213,278
9 Claims. (Cl. 340—172.5)

5. A memory comprising a plurality of memory planes each having a plurality of memory cells for storing binary coded information and arranged in rows and columns, a portion of each memory plane comprising an individual word identification storage portion for an associated stored word, means for substantially simultaneously applying binary coded information representative of word identification information to each column of memory cells in each word identification storage portion of each plane for determining the presence and/or location of the associated word by the generation of a unique output signal indicating the presence of the word in the memory, threshold means coupled to each row of each memory plane to be responsive to the unique output signal and for providing a pair of signals representative of the coordinates of the matching word in the memory, means for storing each of the coordinate signals, individual priority gating means coupled to be responsive to the output signals from each of said storage means for each coordinate to dictate the sequence the multiple locations of the individual coordinate is utilized, normally inoperative mismatch signal

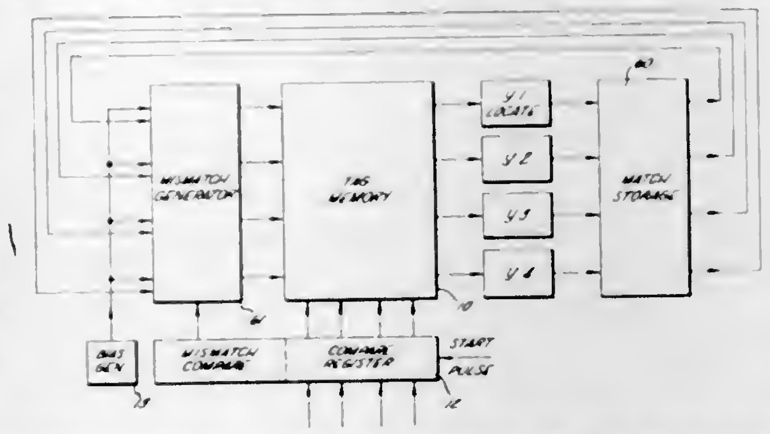

generating means coupled to each row for each plane for producing a signal to be combined with the output signal from the individual row to provide a composite output signal indicative of a mismatch or absence of a word in memory including words previously determined to be present, and control means coupled to be responsive to the output signals from one of said priority gating means for rendering the mismatch signal generating means operative for each of the matching locations except one in accordance with the sequence dictated by the individual priority gating means, said control means including means for resetting said storage means and re-applying the binary coded word identification information to said memory planes.

3,398,405
DIGITAL COMPUTER WITH MEMORY LOCK OPERATION
Carl B. Carlson, Arcadia, and Robert V. Bock, Sierra Madre, Calif., assignors to Burroughs Corporation, Detroit, Mich., a corporation of Michigan
Filed June 7, 1965, Ser. No. 461,923
8 Claims. (Cl. 340—172.5)

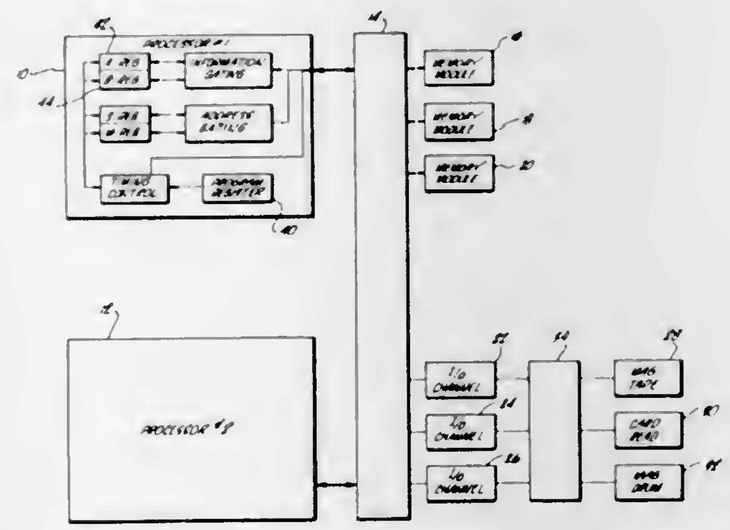

There is described a computer system in which a specific command in a processor sets a flag bit in a word in memory at the time the processor reads this word out of memory. The flag bit then indicates, whenever that particular word is accessed in memory, that the word is "locked" and may be used to prevent use of the word until the flag bit is reset.

DESIGNS

AUGUST 20, 1968

211,975
STRAP FOR MUSICAL INSTRUMENT
Bennie Steinborn, 1619 N. Hoyne Ave., Chicago, Ill. 60647
Filed Oct. 31, 1966, Ser. No. 4,485
Term of patent 3½ years
(Cl. D2—393)

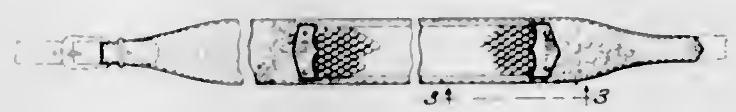

211,976
PORTABLE MANUALLY OPERATED SCRAPER BLADE
Harold A. Rippl, deceased, late of Berea, Ohio, by George A. Rippl, co-executor, Westview, Ohio, and Julie R. Ostrander, co-executrix, Olmstead Falls, Ohio, assignors to Performance Products Company, Cleveland, Ohio, a corporation of Ohio
Filed Nov. 6, 1967, Ser. No. 9,300
Term of patent 14 years
(Cl. D4—26)

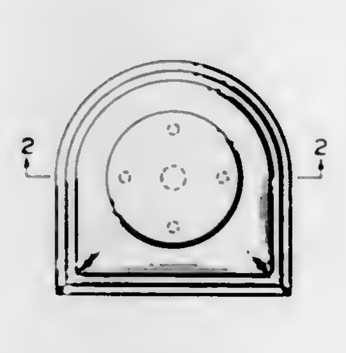

211,977
CONTAINER FOR ICE CREAM OR THE LIKE
Raymond E. Beale, 3376 S. Creek Road, Hamburg, N.Y. 14075
Filed Oct. 12, 1966, Ser. No. 4,246
Term of patent 14 years
(Cl. D9—199)

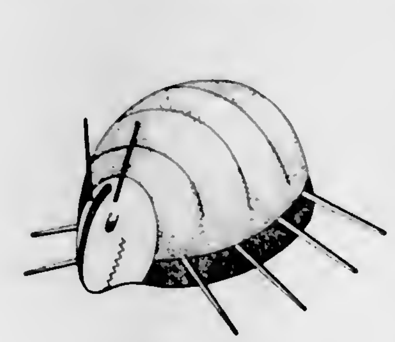

211,978
CARAFE
David Douglas, Manitowoc, Wis., (% Michael, Best & Friedrich, Box 302, Milwaukee, Wis. 53201)
Filed Oct. 27, 1966, Ser. No. 4,448
Term of patent 14 years
(Cl. D9—139)

211,979
COVER FOR PACKAGING CONTAINER OR THE LIKE
René Dru, 7 Rue du Boccador, Paris, France
Filed Sept. 18, 1967, Ser. No. 8,638
Claims priority, application France June 22, 1967
Term of patent 14 years
(Cl. D9—264)

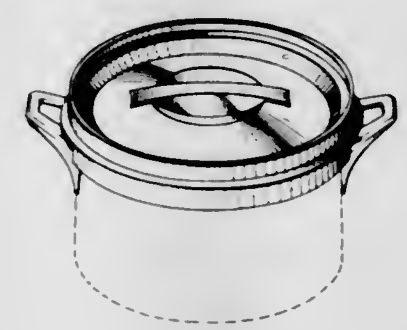

211,980
BUILDING OR THE LIKE
Bailey C. Williams, 1200 Marlboro Road, Raleigh, N.C. 27610
Filed Aug. 12, 1966, Ser. No. 3,442
Term of patent 14 years
(Cl. D13—1)

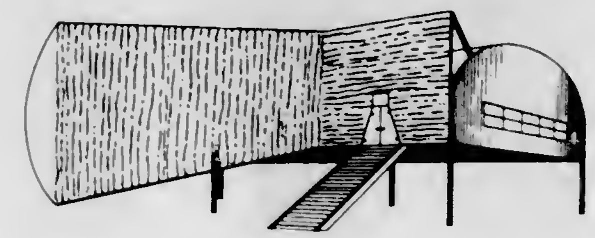

211,981
UTILITY CART
David L. Kelley, Novelty, Ohio, assignor to Du-Fold, Inc.
Filed June 9, 1966, Ser. No. 2,630
Term of patent 14 years
(Cl. D14—3)

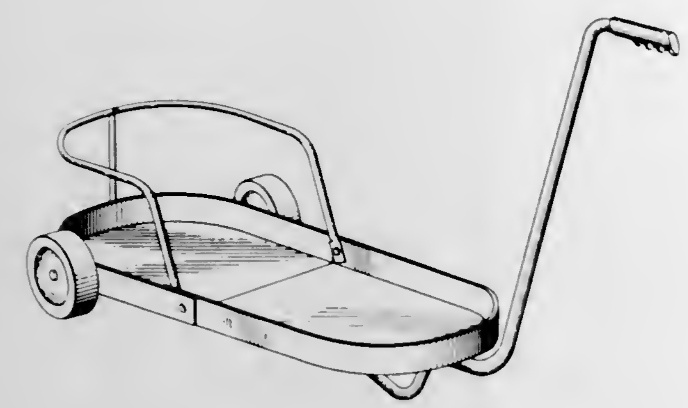

211,982
SELF-PROPELLED UNMANNED TRACTOR
Maynard W. Reed, Mount Clemens, Mich., assignor to Mechanical Handling Systems, Inc., Warren, Mich., a corporation of Michigan
Filed Oct. 10, 1967, Ser. No. 8,946
Term of patent 14 years
(Cl. D14—3)

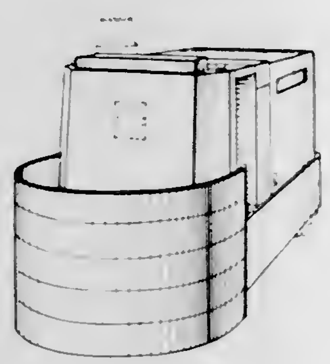

211,983
CHAIR
Dennis J. Kilper, 1104 W. Pratt St., Chicago, Ill. 60626
Filed Sept. 7, 1967, Ser. No. 8,510
Term of patent 14 years
(Cl. D15—1)

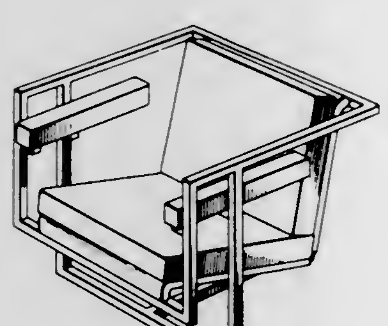

211,984
BASE FOR A DENTAL CHAIR OR THE LIKE
Arthur Gilbert Billin, Rochester, N.Y., assignor to Ritter Pfaudler Corporation, Rochester, N.Y., a corporation of New York
Filed Mar. 21, 1967, Ser. No. 6,323
Term of patent 14 years
(Cl. D15—3)

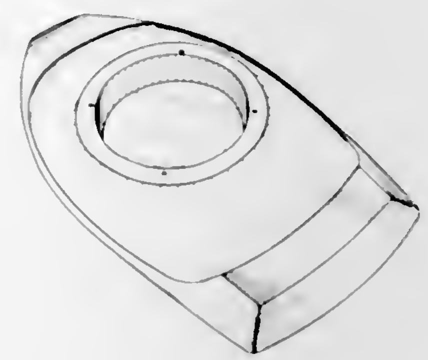

211,985
BARBER CHAIR
Ei Yasutomi, Osaka, Japan, assignor to Baron Trading Co., Ltd., Osaka-fu, Japan
Filed July 26, 1967, Ser. No. 8,006
Term of patent 14 years
(Cl. D15—3)

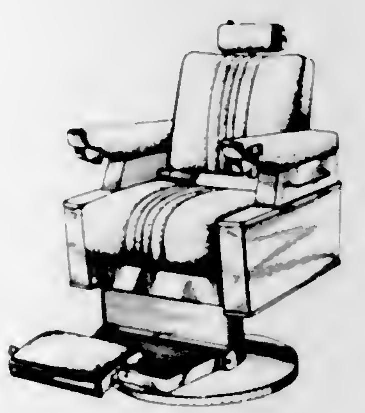

211,986
BARBER CHAIR
Ei Yasutomi, Osaka, Japan, assignor to Baron Trading Co., Ltd., Osaka-fu, Japan
Filed July 26, 1967, Ser. No. 8,014
Term of patent 14 years
(Cl. D15—3)

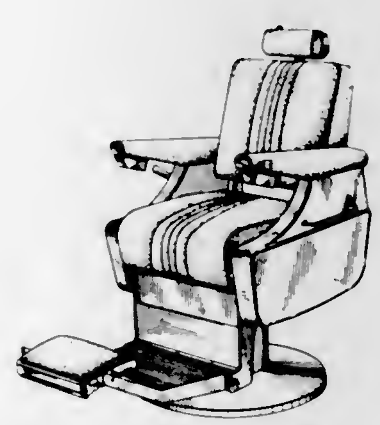

211,987
BUMPER AND HITCH COMBINATION
Edward Zorn, Encino, and Bert J. Sherwood, Los Angeles, Calif., assignors to Chemplate Corporation, Los Angeles, Calif., a corporation of California
Filed June 2, 1967, Ser. No. 7,346
Term of patent 14 years
(Cl. D14—6)

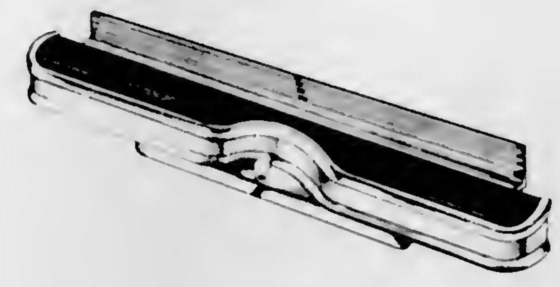

211,988
DUAL SEAT FOR A PASSENGER VEHICLE
Alan R. Cripe, Richmond, Va., assignor to United Aircraft Corporation, East Hartford, Conn., a corporation of Delaware
Filed May 29, 1967, Ser. No. 7,296
Term of patent 14 years
(Cl. D15—8)

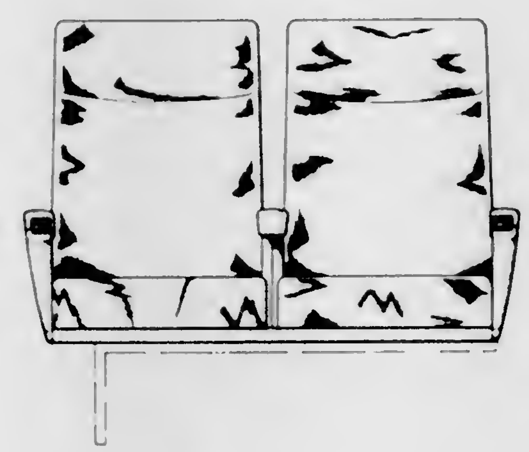

211,989
INSECT CAGE
Daniel Angelo Rodolfo, 29157 Birchrest Drive, Warren, Mich. 48093, and Robert Rodolfo, 23815 Almond, East Detroit, Mich. 48021
Filed June 3, 1966, Ser. No. 2,547
Term of patent 14 years
(Cl. D22—19)

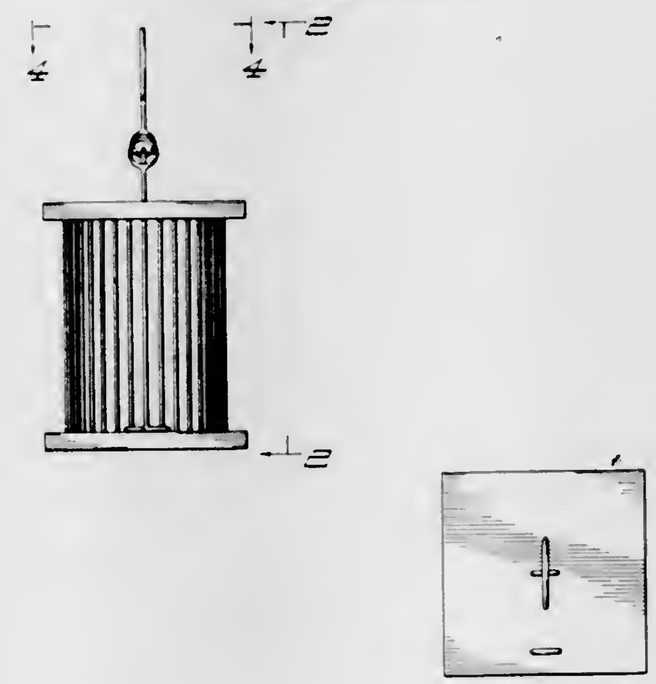

211,990
FISH LURE PROTECTOR
Clarence E. Smith, Rte. 2, Mabank, Tex. 75147
Filed Apr. 14, 1967, Ser. No. 6,690
Term of patent 14 years
(Cl. D22—31)

211,991
APPARATUS FOR MIXING MATERIALS WITH A FLOWING LIQUID
Gwilym Mansell de May, London, England, assignor to Smith Hayden & Company Limited, Molesey, England, a company of Great Britain
Filed May 26, 1967, Ser. No. 7,271
Claims priority, application Great Britain Dec. 16, 1966
Term of patent 3½ years
(Cl. D23—3)

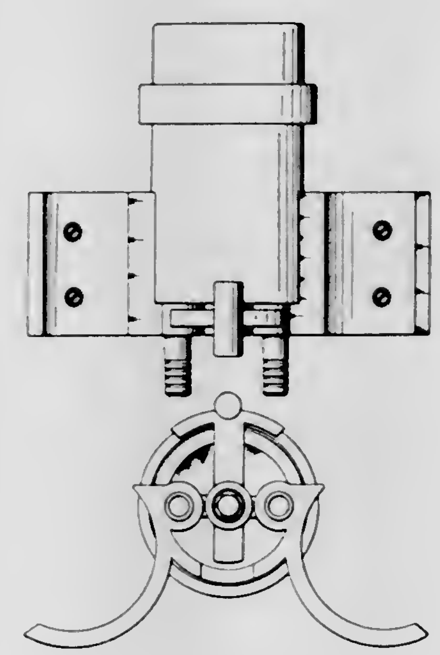

211,992
FOLDING SHOWER DOOR
Roy L. Brenner, Highland Park, Ill., assignor to Kinkead Industries Incorporated, Chicago, Ill., a corporation of Illinois
Filed Mar. 1, 1967, Ser. No. 6,016
Term of patent 14 years
(Cl. D23—69)

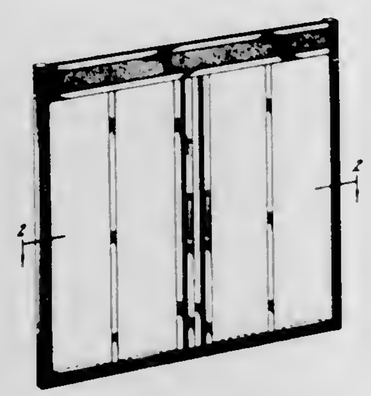

211,993
ELECTRIC HEATER
Melbourne Jack Eno and Wilbur Earl Eno, both of 6421 SW. 42nd Terrace, Miami, Fla. 33155
Filed Aug. 30, 1967, Ser. No. 8,432
Term of patent 14 years
(Cl. D23—93)

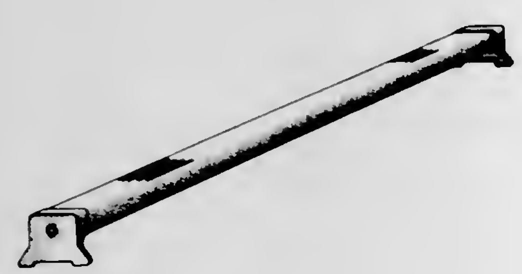

211,994
TOILET BOWL DEODORIZER
Richard E. Goodman, 1053 Roscomare, Los Angeles, Calif. 90024
Filed Nov. 15, 1967, Ser. No. 9,420
Term of patent 14 years
(Cl. D23—150)

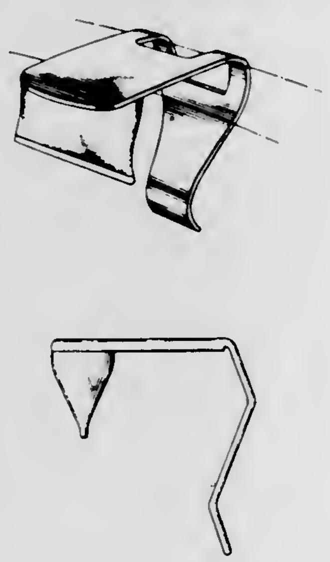

211,995
TRANSMISSION LINE SUPPORT STRUCTURE
Lee J. Dake, Elmhurst, Ill., assignor to Joslyn Mfg. and Supply Co., Chicago, Ill., a corporation of Illinois
Filed Mar. 27, 1967, Ser. No. 6,392
Term of patent 14 years
(Cl. D26—12)

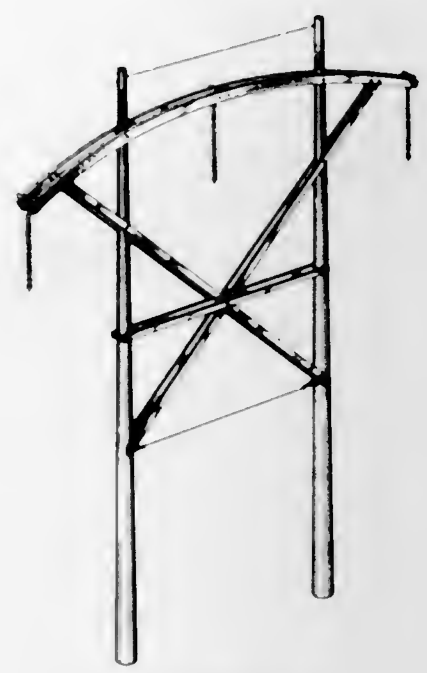

211,996
ROTATIONAL KNOB FOR CONTROLS AND THE LIKE
Ralph F. Rogers, Goshen, Ind., assignor to Penn Controls, Inc., Wheaton, Ill., a corporation of Delaware
Filed June 16, 1967, Ser. No. 7,502
Term of patent 14 years
(Cl. D26—13)

211,997
TAPE RECORDER OR SIMILAR ARTICLE
Tetsujiro Hasegawa, 19–4 Nakacho, 2-chome, Meguro-ku, Tokyo, Japan
Filed July 26, 1967, Ser. No. 8,005
Term of patent 14 years
(Cl. D26—14)

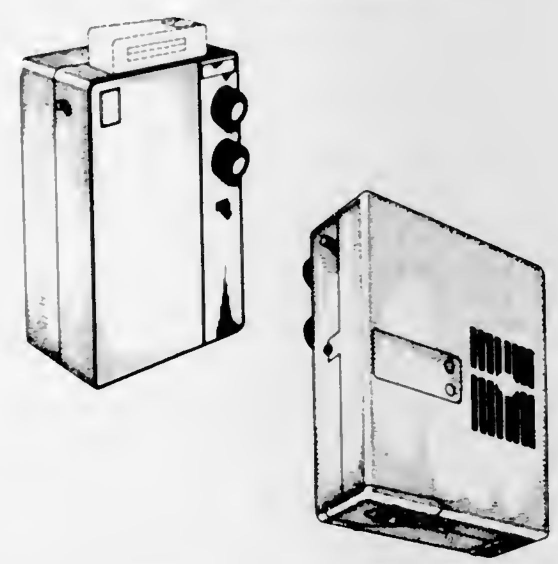

211,998
DESK-TYPE TELEPHONE
Ernst Abraham, Berlin, Germany, assignor to Krone Kommanditgesellschaft, Berlin, Germany, a corporation of Germany
Filed Nov. 20, 1967, Ser. No. 9,469
Claims priority, application Germany May 18, 1967
Term of patent 14 years
(Cl. D26—14)

211,999
TELEPHONE STAND
Andrew J. Prince, 47 Stamford Road, Mercerville, N.J. 08619
Filed Dec. 11, 1967, Ser. No. 9,724
Term of patent 14 years
(Cl. D26—14)

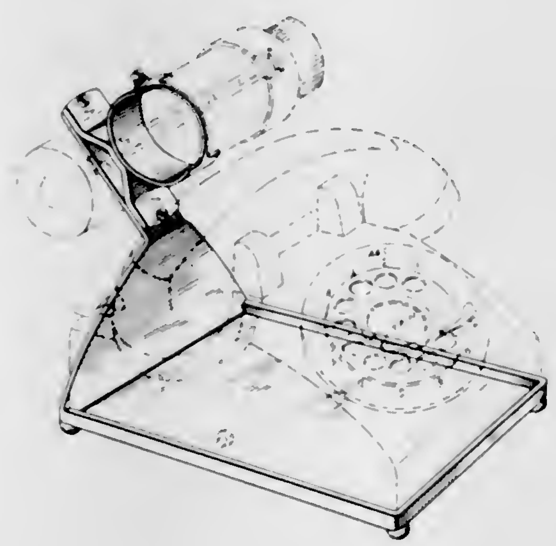

212,000
DESK TELEPHONE SET
Ashot Akopovich Partizpanian, Ul. Lenina 8, kv. 6, Riga, U.S.S.R.
Filed Oct. 11, 1967, Ser. No. 8,949
Term of patent 14 years
(Cl. D26—14)

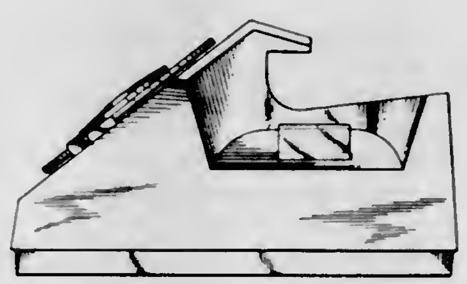

212,001
WIRELESS INTERCOM
Jack C. Roberts, Los Angeles County, Calif., assignor to Saxton Electronics Corporation, Congers, N.Y., a corporation of New York
Filed Feb. 13, 1968, Ser. No. 10,557
Term of patent 14 years
(Cl. D26—14)

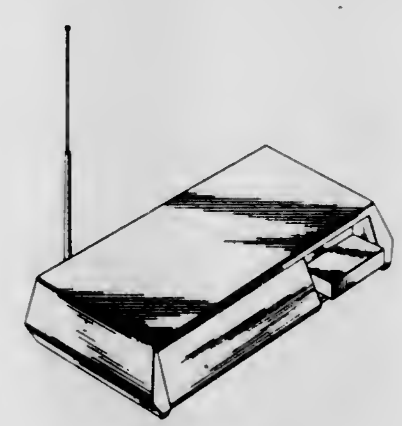

212,002
AIRCRAFT ANTENNA MAST FOR SUPPORTING INTERMEDIATE PORTION OF ANTENNA WIRE
William C. Rogers, 5365 NW. 36th St., Miami Springs, Fla. 33166
Filed Jan. 19, 1968, Ser. No. 10,222
Term of patent 14 years
(Cl. D26—14)

212,003
MUSICAL INSTRUMENT TRANSMITTER DEVICE
Jack C. Roberts, Los Angeles County, Calif., assignor to Saxton Electronics Corporation, Congers, N.Y., a corporation of New York
Filed Feb. 7, 1968, Ser. No. 10,469
Term of patent 14 years
(Cl. D26—14)

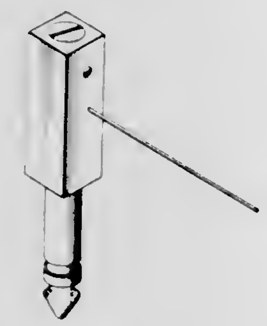

212,004
SPEAKER ENCLOSURE
Samuel A. Emond, 255 W. 96th St., Bloomington, Minn. 55420
Filed Oct. 16, 1967, Ser. No. 9,000
Term of patent 14 years
(Cl. 26—14)

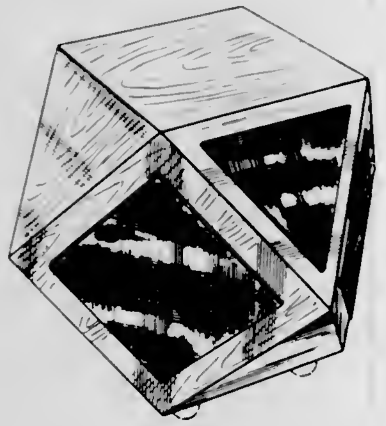

212,005
MUSICAL INSTRUMENT TRANSMITTER HOUSING
Jack C. Roberts, Los Angeles County, Calif., assignor to Saxton Electronics Corporation, Congers, N.Y., a corporation of New York
Filed Feb. 7, 1968, Ser. No. 10,484
Term of patent 14 years
(Cl. D26—14)

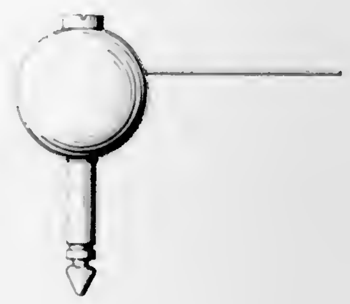

212,006
PLUG-IN GUITAR TRANSMITTER HOUSING
Jack C. Roberts, Los Angeles County, Calif., assignor to Saxton Electronics Corporation, Congers, N.Y., a corporation of New York
Filed Feb. 7, 1968, Ser. No. 10,482
Term of patent 14 years
(Cl. D26—14)

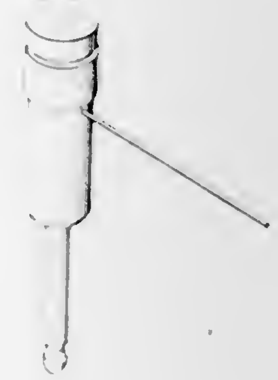

212,007
PLUG-IN POWER SUPPLY
Joseph A. Mas, Woodbury, N.Y., assignor to Dynamic Instrument Corporation, Plainview, N.Y., a corporation of New York
Filed Dec. 22, 1967, Ser. No. 9,892
Term of patent 14 years
(Cl. D26—15)

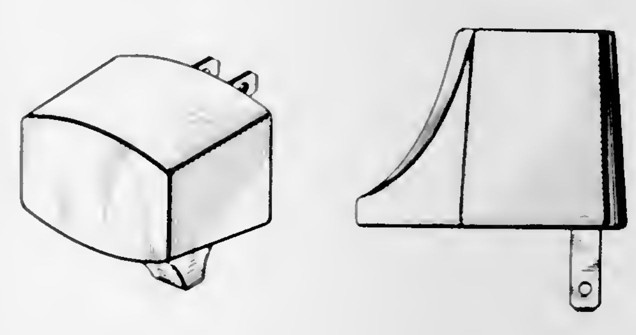

212,008
BEADED ARTIFICIAL TREE OR THE LIKE
Margaret R. Wender, 4201 Cathedral Ave. NW., Washington, D.C. 20016
Filed Feb. 24, 1967, Ser. No. 5,944
Term of patent 14 years
(Cl. D29—1)

212,009
DOG'S BED
John Randolph Madlem, Catskill, N.Y., assignor to Creative Associates of Albany, Ltd., Latham, N.Y., a corporation of New York
Filed Sept. 26, 1966, Ser. No. 4,042
Term of patent 14 years
(Cl. D30—41)

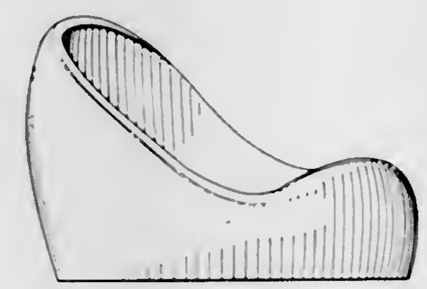

212,010
TOILET TISSUE DISPENSER
Council A. Tucker, Glendale, Calif., assignor to Towlsaver, Inc., Los Angeles, Calif., a corporation of California
Filed Sept. 18, 1967, Ser. No. 8,633
Term of patent 14 years
(Cl. D33—31)

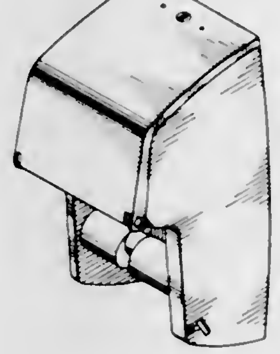

212,011
DRAWER FOR A CARD CATALOG CABINET
Jens Risom, New Canaan, and Carl Jacobs, Old Greenwich, Conn. (both of 444 Madison Ave., New York, N.Y. 10022)
Filed May 16, 1967, Ser. No. 7,147
Term of patent 14 years
(Cl. D33—1)

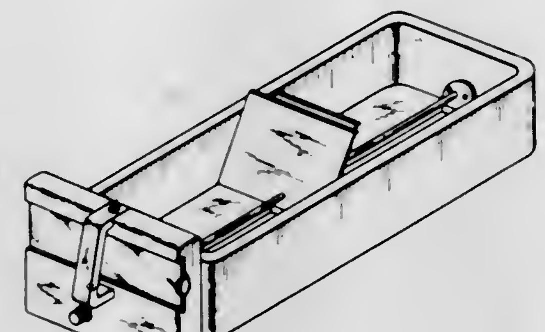

212,012
PORTABLE PODIUM
Earl L. Collins, 4004 Lowell Court, Midland, Mich. 48640
Filed Feb. 3, 1967, Ser. No. 5,682
Term of patent 7 years
(Cl. D33—10)

212,013
TOY FIGURE
Reuben B. Klamer, 245 S. Barrington Ave., Los Angeles, Calif. 90049
Filed Aug. 2, 1967, Ser. No. 8,087
Term of patent 14 years
(Cl. D34—2)

212,014
TOY FIGURE
Reuben B. Klamer, 245 S. Barrington Ave., Los Angeles, Calif. 90049
Filed Aug. 2, 1967, Ser. No. 8,091
Term of patent 14 years
(Cl. D34—2)

212,015
TOY FIGURE
Reuben B. Klamer, 245 S. Barrington Ave., Los Angeles, Calif. 90049
Filed Aug. 2, 1967, Ser. No. 8,093
Term of patent 14 years
(Cl. D34—2)

212,016
GAME DEVICE OR THE LIKE
Alfred E. Ischinger, 410 Kenhorst Blvd., Reading, Pa. 19602
Filed July 21, 1967, Ser. No. 7,935
Term of patent 14 years
(Cl. D34—5)

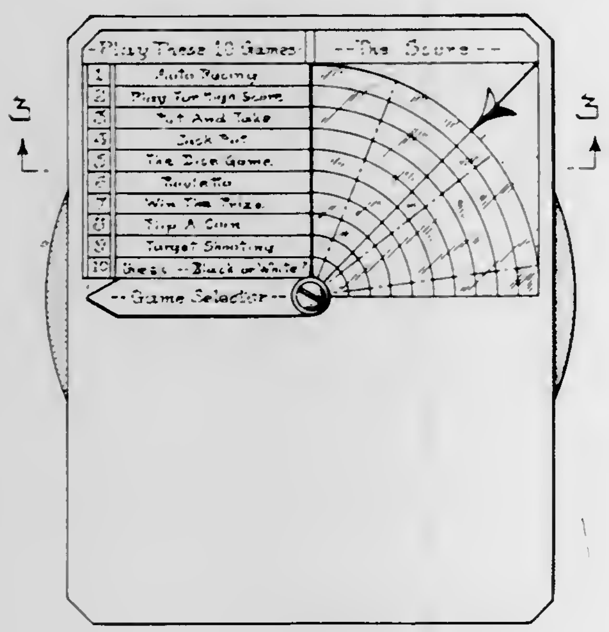

212,017
KITE
Donald J. Kennedy, 7500 Laurel Canyon Road, North Hollywood, Calif. 91605
Filed June 14, 1967, Ser. No. 7,476
Term of patent 14 years
(Cl. D34—15)

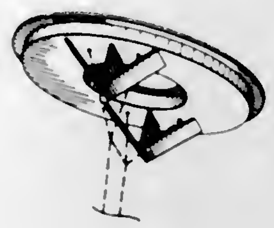

212,018
CHILD'S COMBINATION MULTIPLE CLIMBER AND SLIDE OR SIMILAR ARTICLE
Egbert Grant Jamison and Ronald W. Zick, Torrance, Calif., assignors to Jamison, Inc., Torrance, Calif., a corporation of California
Filed May 15, 1967, Ser. No. 7,130
Term of patent 14 years
(Cl. D34—5)

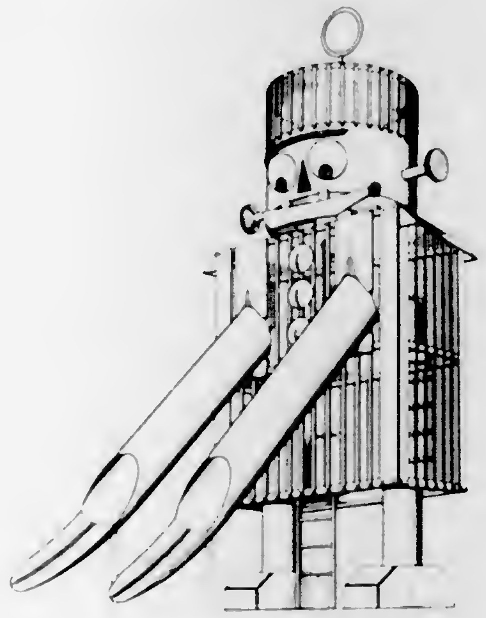

212,019
EXERCISER
Albert Schawalder, Brugg, Bern, Switzerland, assignor to Monty MacLevy, New York, N.Y.
Filed July 27, 1967, Ser. No. 8,036
Term of patent 14 years
(Cl. D34—5)

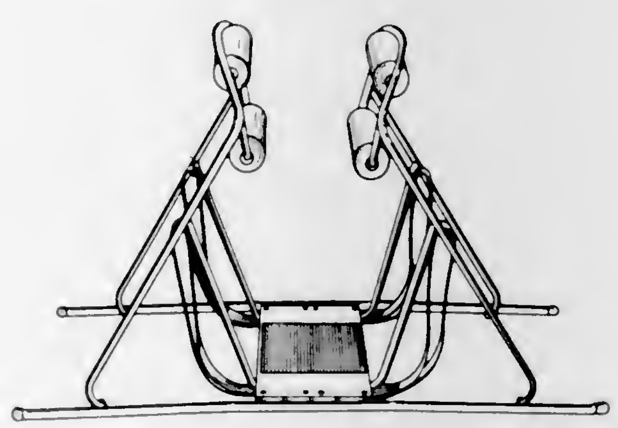

212,020
COMBINED GOLF BALL AND TEE RETAINER
William K. Najjar, Grand Rapids, Mich., assignor of one-tenth interest to Donald E. Mack, Grand Rapids, Mich.
Filed Sept. 27, 1967, Ser. No. 8,752
Term of patent 14 years
(Cl. D34—5)

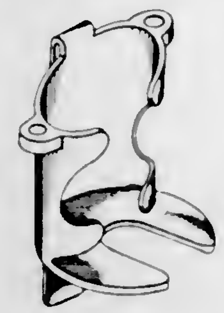

212,021
CLIMBING EXERCISE PEGBOARD
Jack E. Gregory, Spokane, Wash., assignor to J. E. Gregory Co., Inc., a corporation of Washington
Filed Oct. 10, 1967, Ser. No. 8,942
Term of patent 14 years
(Cl. D34—5)

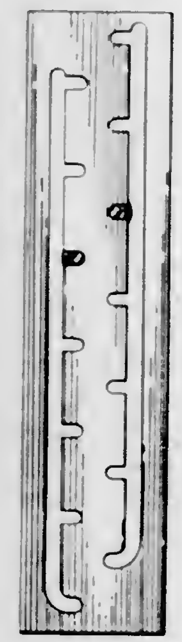

212,022
STILT
Joseph Klimko, 3244 Powers Way, Youngstown, Ohio 44502
Filed Dec. 7, 1967, Ser. No. 9,698
Term of patent 14 years
(Cl. D34—14)

212,023
COVERED CANDY DISH OR SIMILAR ARTICLE
Frank J. Benes, Lancaster, Ohio, assignor to Anchor Hocking Glass Corporation, Lancaster, Ohio, a corporation of Delaware
Filed May 31, 1967, Ser. No. 7,309
Term of patent 14 years
(Cl. D36—2)

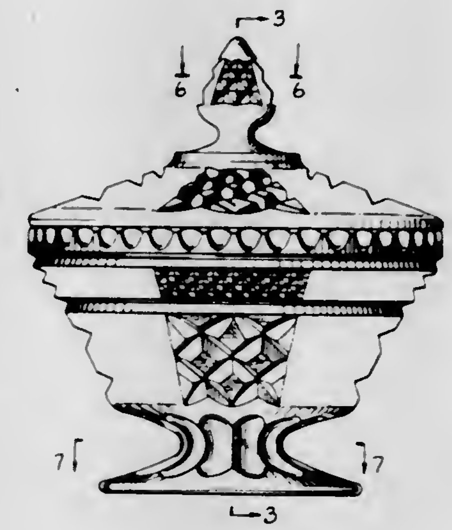

212,024
TUMBLER OR SIMILAR ARTICLE
Frank J. Benes, Lancaster, Ohio, assignor to Anchor Hocking Glass Corporation, Lancaster, Ohio, a corporation of Delaware
Continuation-in-part of design application Ser. No. 7,275, May 26, 1967. This application Feb. 13, 1968, Ser. No. 10,563
Term of patent 14 years
(Cl. D36—8)

212,025
CULTIVATING TOOL
Ephraim Pede, 4332 Regent St., Duluth, Minn. 55804
Filed Jan. 22, 1968, Ser. No. 10,246
Term of patent 14 years
(Cl. D39—1)

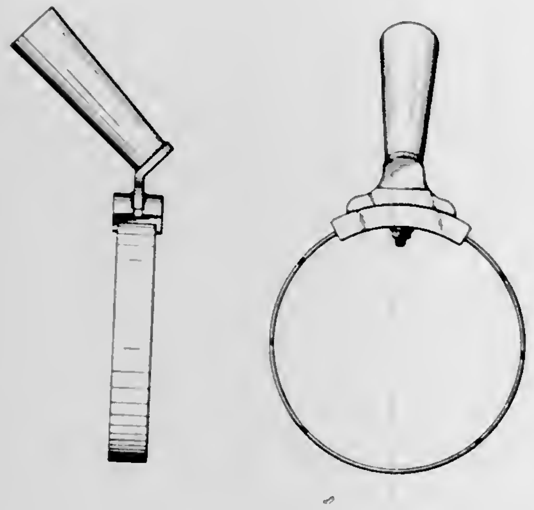

212,026
CLOCK CASING
Monte L. Levin, New York, N.Y., assignor to General Time Corporation, Stamford, Conn., a corporation of Delaware
Filed Oct. 17, 1967, Ser. No. 9,027
Term of patent 14 years
(Cl. D42—7)

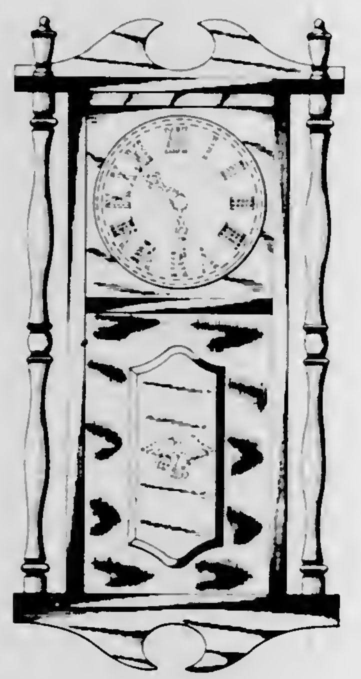

212,027
CLOCK CASING
Ellworth R. Danz, La Salle, Ill., assignor to General Time Corporation, Stamford, Conn., a corporation of Delaware
Filed Aug. 24, 1967, Ser. No. 8,377
Term of patent 14 years
(Cl. D42—7)

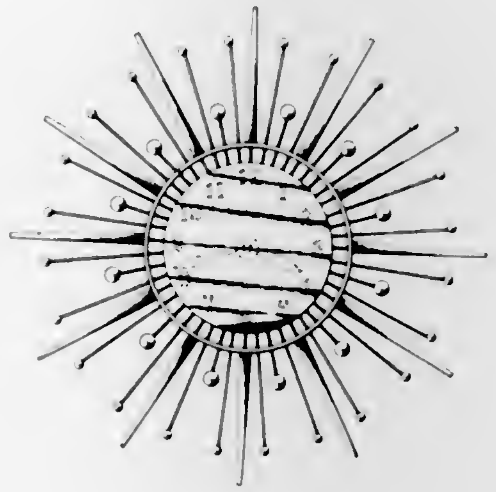

212,028
CLOCK CASING
David W. Miley, Peru, Ill., assignor to General Time Corporation, Stamford, Conn., a corporation of Delaware
Filed Aug. 24, 1967, Ser. No. 8,381
Term of patent 14 years
(Cl. D42—7)

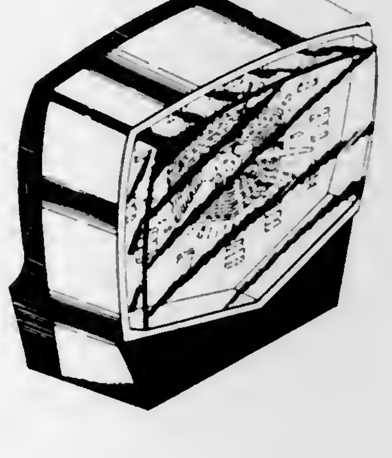

212,029
CLOCK CASING
Ellworth R. Danz, La Salle, Ill., assignor to General Time Corporation, Stamford, Conn., a corporation of Delaware
Filed Aug. 24, 1967, Ser. No. 8,375
Term of patent 14 years
(Cl. D42—7)

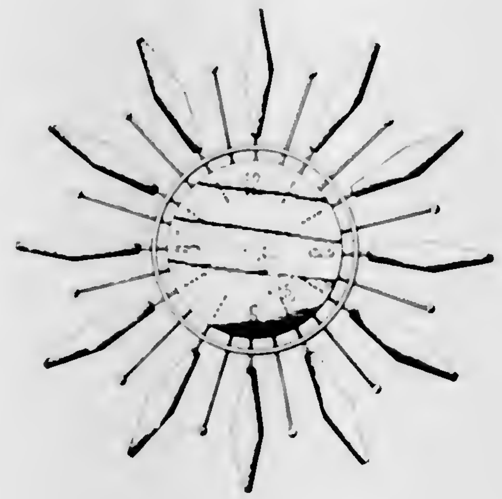

212,030
CLOCK CASING
David W. Miley, Peru, and Ellworth R. Danz, La Salle, Ill., assignors to General Time Corporation, Stamford, Conn., a corporation of Delaware
Filed Feb. 14, 1968, Ser. No. 10,574
Term of patent 14 years
(Cl. D42—7)

212,031
CLOCK CASING
Ellworth R. Danz, La Salle, Ill., assignor to General Time Corporation, Stamford, Conn., a corporation of Delaware
Filed Aug. 24, 1967, Ser. No. 8,371
Term of patent 14 years
(Cl. D42—7)

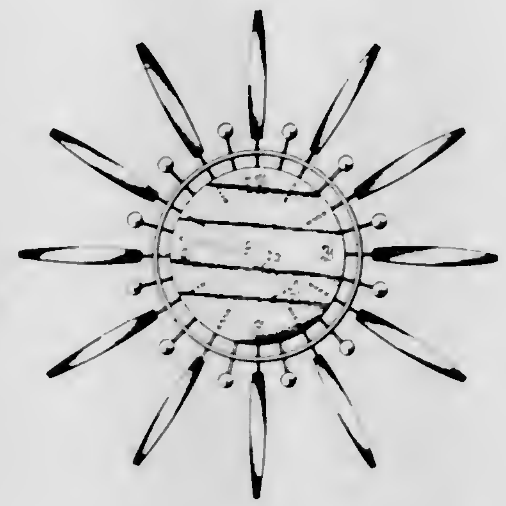

212,032
CLOCK CASING
David W. Miley, Peru, Ill., assignor to General Time Corporation, Stamford, Conn., a corporation of Delaware
Filed Feb. 14, 1968, Ser. No. 10,567
Term of patent 14 years
(Cl. D42—7)

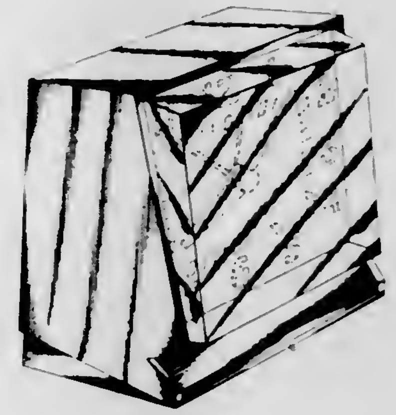

212,033
SUPPORT FOR LETTUCE OR THE LIKE
James B. Swett, Barrington, R.I., assignor to Rexall Drug and Chemical Company, Los Angeles, Calif., a corporation of Delaware
Continuation-in-part of design application Ser. No. 906, Feb. 3, 1966. This application Dec. 12, 1966, Ser. No. 5,003
Term of patent 14 years
(Cl. D44—1)

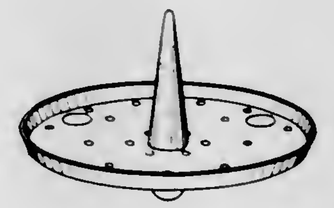

212,034
INSULATED FOOD CARRIER
Thordis Grace Hallbeck, 328 W. Ethel Ave., Lombard, Ill. 60148
Filed Nov. 2, 1967, Ser. No. 9,261
Term of patent 7 years
(Cl. D44—1)

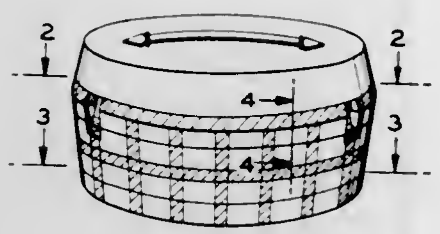

212,035
PITCHER
Frank J. Benes, Lancaster, Ohio, assignor to Anchor Hocking Glass Corporation, Lancaster, Ohio, a corporation of Delaware
Filed Apr. 20, 1967, Ser. No. 6,764
Term of patent 14 years
(Cl. D44—21)

212,036
LUBRICATOR FOR LAWN MOWERS AND THE LIKE
Kenneth N. Hasenbank, Minneapolis, Minn., assignor to Toro Manufacturing Corporation, Minneapolis, Minn., a corporation of Minnesota
Original design application Apr. 20, 1966, Ser. No. 1,956, now Patent No. 208,808, dated Oct. 3, 1967. Divided and this application Feb. 27, 1967, Ser. No. 7,550
Term of patent 14 years
(Cl. D46—1)

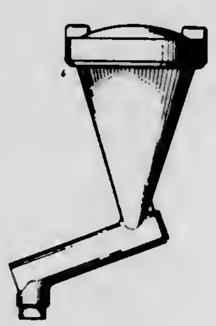

212,037
BEADED FLORAL CANDLEHOLDER DECORATION
Margaret R. Wender, 4201 Cathedral Ave. NW., Washington, D.C. 20016
Filed Mar. 10, 1967, Ser. No. 6,151
Term of patent 14 years
(Cl. D48—2)

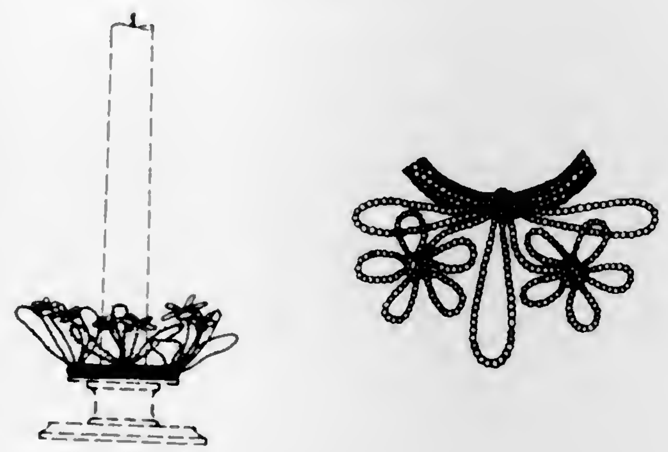

212,038
HIGH-INTENSITY LAMP OR SIMILAR ARTICLE
Minoru Araki, Tokyo, Japan, assignor to Lloyd's Electronics International, a corporation of California
Original design application Jan. 10, 1966, Ser. No. 1,856. Divided and this application June 20, 1966, Ser. No. 9,269
Term of patent 14 years
(Cl. D48—20)

212,039
COMBINED TEA CART AND PORTABLE DISHWASHER
Wallace H. Appel and Carl A. Peterson, Columbus, Ohio, assignors to Westinghouse Electric Corporation, a corporation of Pennsylvania
Filed Aug. 2, 1967, Ser. No. 8,101
Term of patent 14 years
(Cl. D49—1)

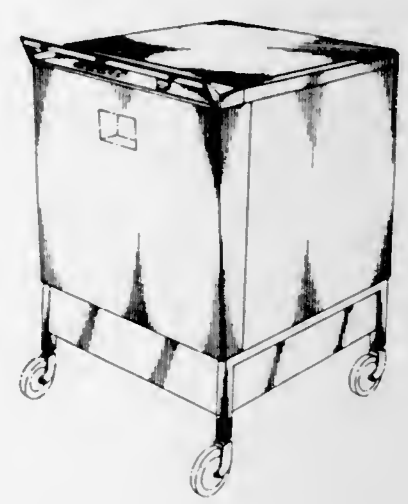

212,040
VACUUM CLEANER
Rudolph Bernard Zijlstra, Drachten, Netherlands, assignor to North American Philips Co., Inc.
Filed Mar. 7, 1967, Ser. No. 6,103
Claims priority, application Switzerland Sept. 30, 1966
Term of patent 14 years
(Cl. D49—14.3)

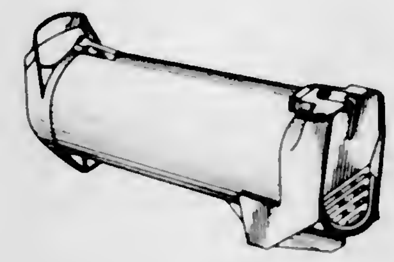

212,041
CONTAINER FOR PAPER NAPKINS OR THE LIKE
Nathan Shapira, Los Angeles, Calif., assignor to Cartiera di Cairate S.p.A., Milan, Italy
Filed July 17, 1967, Ser. No. 7,816
Claims priority, application Italy May 8, 1967
Term of patent 14 years
(Cl. D52—2)

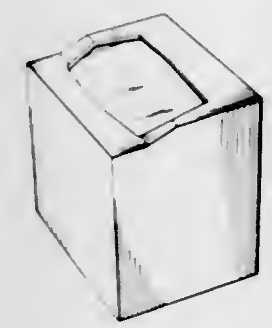

212,042
STOPPING DISTANCE COMPUTER FOR A KEY CHAIN
Lewis D. Wacker, 137 Woodcrest Blvd., Kenmore, N.Y. 14217
Filed Aug. 11, 1967, Ser. No. 8,235
Term of patent 14 years
(Cl. D52—6)

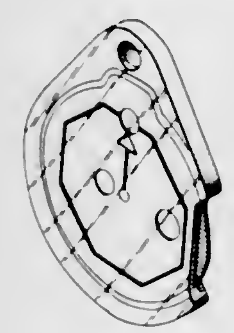

212,043
THERMOMETER HOLDER
John R. Byrne, Watertown, Wis., assignor to Will Ross, Inc., Milwaukee, Wis., a corporation of Wisconsin
Filed Nov. 15, 1967, Ser. No. 9,411
Term of patent 14 years
(Cl. D52—7)

212,044
THREE-DIMENSIONAL PLASTIC PANEL
Gerald A. Woodman, 2216 Duxbury Circle, Los Angeles, Calif. 90034
Filed Aug. 22, 1966, Ser. No. 3,547
Term of patent 14 years
(Cl. D54—2)

212,045
CLOCK RADIO
John K. Miles and Odin D. Lingle, Columbus, Ind., assignors to Arvin Industries, Inc., Columbus, Ind., a corporation of Indiana
Filed Oct. 20, 1967, Ser. No. 9,084
Term of patent 14 years
(Cl. D56—4)

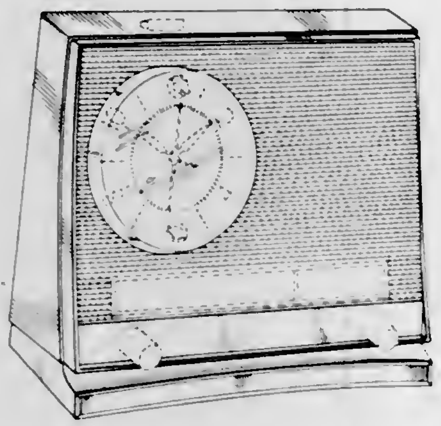

212,046
RADIO
David B. Rote, Fort Wayne, Ind., assignor to Arvin Industries, Inc., Columbus, Ind., a corporation of Indiana
Filed Nov. 6, 1967, Ser. No. 9,294
Term of patent 14 years
(Cl. D56—4)

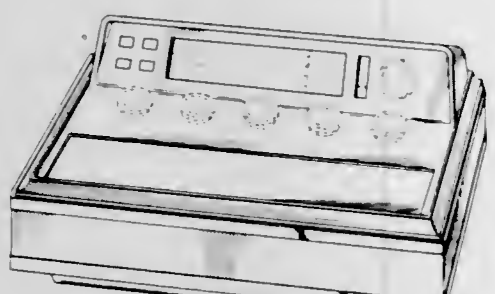

212,047
EYE GLASS HINGE UNIT
Edward J. Mankowski, 206 Parker Ave., Maplewood, N.J. 07040
Filed Aug. 9, 1967, Ser. No. 8,192
Term of patent 14 years
(Cl. D57—1)

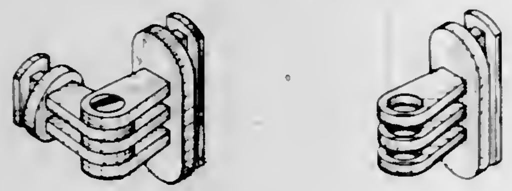

212,048
PAIR OF EYE PROTECTIVE SPECTACLES
Walter O. Parker, Henrietta, N.Y., assignor to Bausch & Lomb Incorporated, Rochester, N.Y., a corporation of New York
Filed Jan. 3, 1967, Ser. No. 5,287
Term of patent 14 years
(Cl. D57—1)

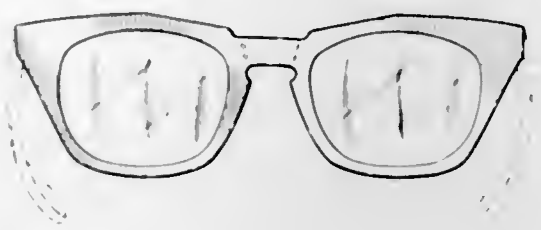

212,049
PAPER TOWELING
Philip Masnick, New York, N.Y., assignor to The Procter & Gamble Company, Cincinnati, Ohio, a corporation of Ohio
Filed Oct. 17, 1966, Ser. No. 4,295
Term of patent 14 years
(Cl. D59—2)

212,050
PHOTOCOPY MACHINE
Bastiaan K. Nederlof, Delft, Dick W. Schenderling, Maassluis, and Hendricus van der Stap, Den Haag, Netherlands, assignors to GAF Corporation, a corporation of Delaware
Filed Dec. 13, 1967, Ser. No. 9,758
Term of patent 14 years
(Cl. D61—1)

212,051
MOTION PICTURE CAMERA
Thomas R. Salvo, Stoneham, Mass., assignor to Keystone Mfg. Corp., Boston, Mass., a corporation of Massachusetts
Filed Sept. 12, 1967, Ser. No. 8,569
Term of patent 14 years
(Cl. D61—1)

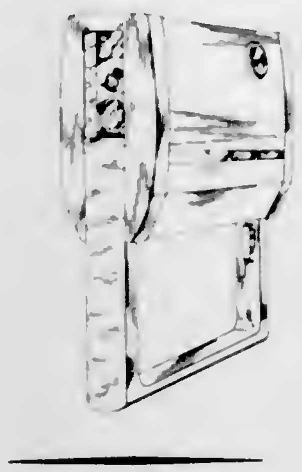

212,052
WHITE PRINT MACHINE
Joel W. Bravo, Montrose, Pa., assignor to GAF Corporation, a corporation of Delaware
Filed Oct. 21, 1966, Ser. No. 4,361
Term of patent 7 years
(Cl. D61—1)

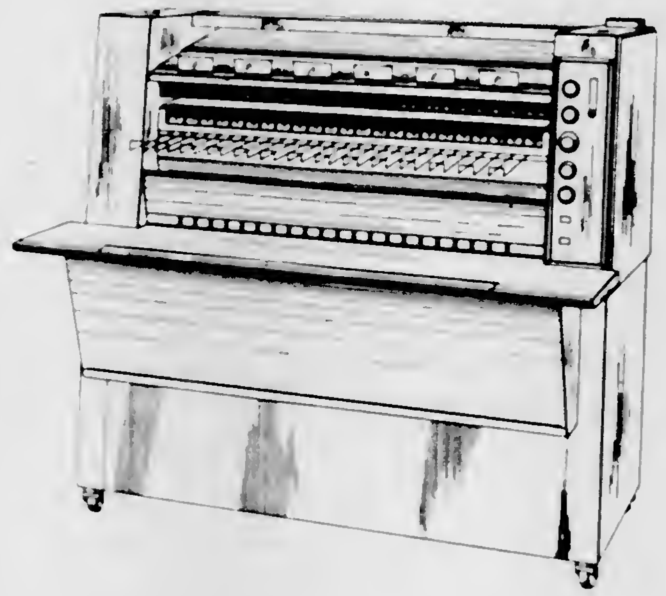

212,053
FOLDABLE REAR PROJECTION VIEWER OR SIMILAR ARTICLE
Eugene Martinez, Irvington, N.Y., assignor to Hudson Photographic Industries, Inc., Irvington, N.Y., a corporation of New York
Filed Nov. 3, 1966, Ser. No. 4,536
Term of patent 14 years
(Cl. D61—1)

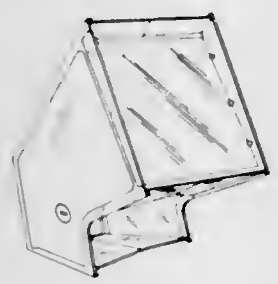

212,054
MOVIE CAMERA
Dale R. Caldwell, 400 Deming Place, Chicago, Ill. 60614
Filed Aug. 29, 1967, Ser. No. 8,412
Term of patent 14 years
(Cl. D61—1)

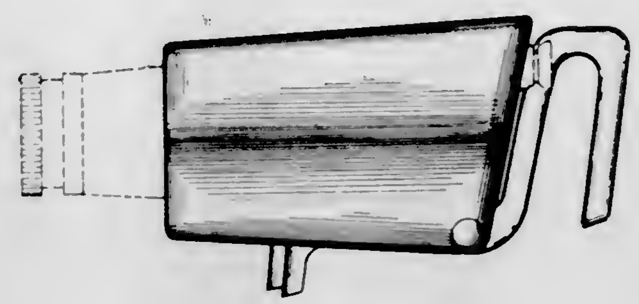

212,055
MOVIE CAMERA
Dale R. Caldwell, Chicago, Ill., assignor to Argus Incorporated, Chicago, Ill., a corporation of Delaware
Filed Aug. 29, 1967, Ser. No. 8,414
Term of patent 14 years
(Cl. D61—1)

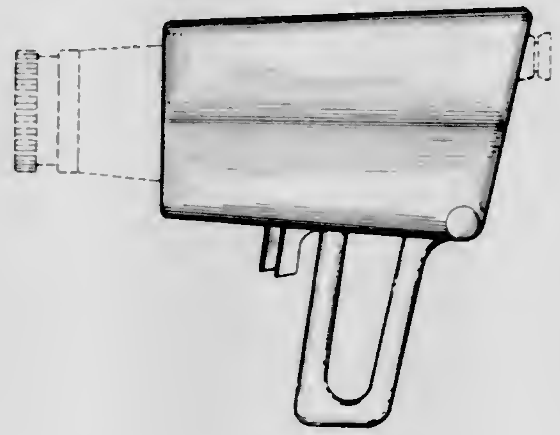

212,056
CALCULATING MACHINE
Carl Auboeck, Vienna, Austria, assignor to Olympia Werke A.G., Wilhelmshaven, Germany
Filed Nov. 2, 1967, Ser. No. 9,250
Term of patent 14 years
(Cl. D64—11)

212,057
TYPEWRITER
Frank C. Fusco, Monroe, Norman C. Gold, New York, and William Gold, Great Neck, N.Y., assignors to Louis Marx & Co., Inc., New York, N.Y., a corporation of New York
Filed July 26, 1966, Ser. No. 3,905
Term of patent 14 years
(Cl. D64—11)

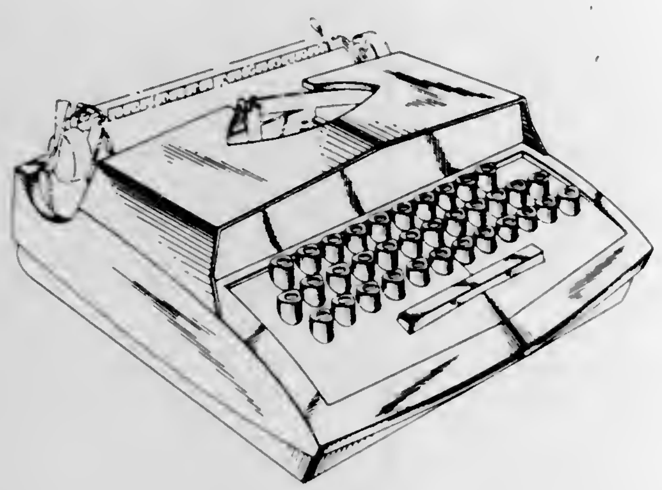

212,058
CALCULATING MACHINE
Alfons Boothby, Wilhelmshaven, Germany, assignor to Olympia Werke A.G., Wilhelmshaven, Germany
Filed Oct. 18, 1967, Ser. No. 9,043
Term of patent 14 years
(Cl. D64—11)

212,059
CALCULATING MACHINE
Alfons Boothby, Wilhelmshaven, Germany, assignor to Olympia Werke A.G., Wilhelmshaven, Germany
Filed Oct. 18, 1967, Ser. No. 9,044
Term of patent 14 years
(Cl. D64—11)

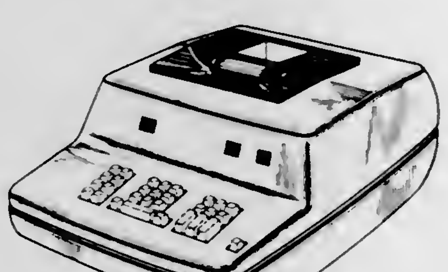

212,060
CALCULATING MACHINE
Alfons Boothby, Wilhelmshaven, Germany, assignor to Olympia Werke A.G., Wilhelmshaven, Germany
Filed Nov. 3, 1967, Ser. No. 9,265
Term of patent 14 years
(Cl. D64—11)

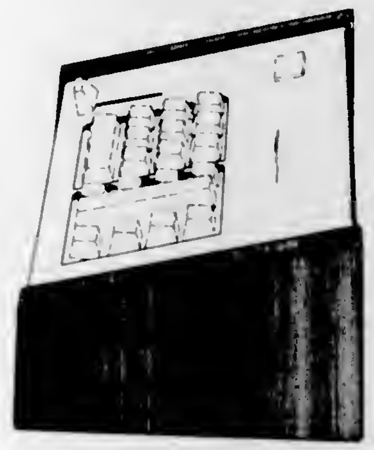

212,061
SEWING MACHINE
Henry Dreyfuss, South Pasadena, Calif., assignor to The Singer Company, New York, N.Y., a corporation of New Jersey
Filed Sept. 27, 1967, Ser. No. 8,750
Term of patent 14 years
(Cl. D70—1)

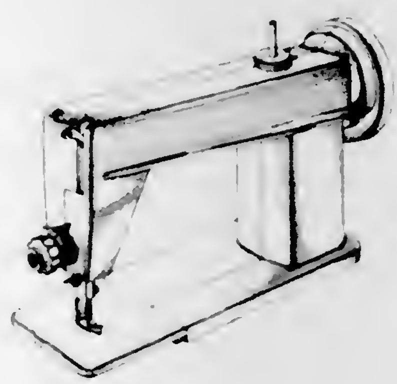

212,062
LETTER OPENER
Thomas H. Davis, Rocky River, Ohio, assignor to The General Industries, Elyria, Ohio, a corporation of Ohio
Filed May 15, 1967, Ser. No. 7,131
Term of patent 14 years
(Cl. D74—10)

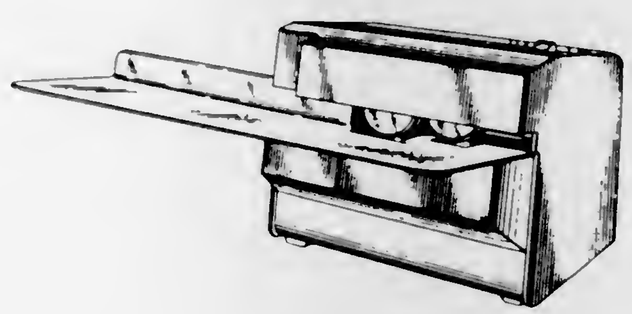

212,063
MERCHANDISE DISPLAY STAND
Fillmore Cannon, Ridgefield, Conn., assignor to Joseph E. Seagram & Sons, Inc., New York, N.Y., a corporation of Indiana
Filed Aug. 29, 1967, Ser. No. 8,419
Term of patent 14 years
(Cl. D80—9)

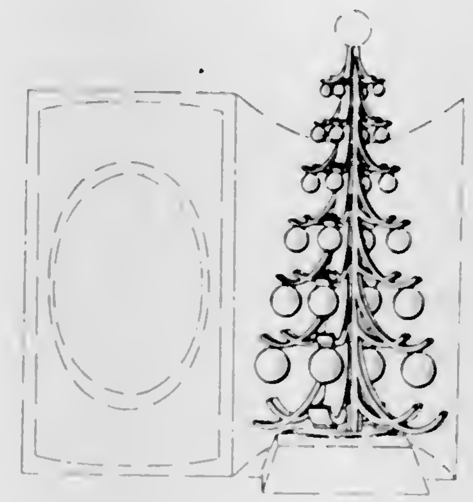

212,064
URINAL DRAINAGE BAG
Michael Campbell, Bristol, and Joseph E. Lambert, Edgewood, R.I., assignors to Hassenfeld Bros. Inc., Pawtucket, R.I., a corporation of Rhode Island
Filed Aug. 28, 1967, Ser. No. 8,400
Term of patent 14 years
(Cl. D83—1)

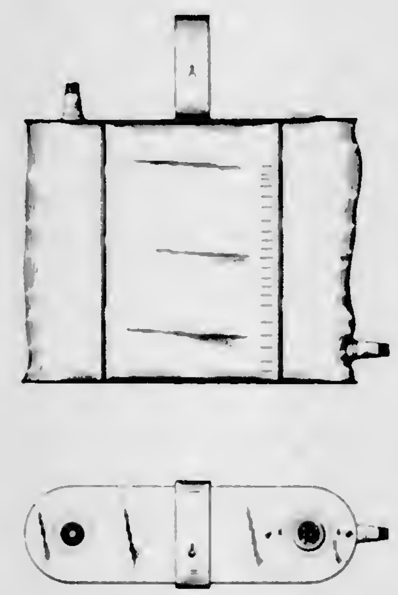

212,065
COMBINED ASH TRAY AND TAPE DISPENSER
Milton R. Stohl, Greenwich, Conn., assignor to Borden, Inc., New York, N.Y., a corporation of New Jersey
Filed Aug. 4, 1967, Ser. No. 8,125
Term of patent 14 years
(Cl. D85—2)

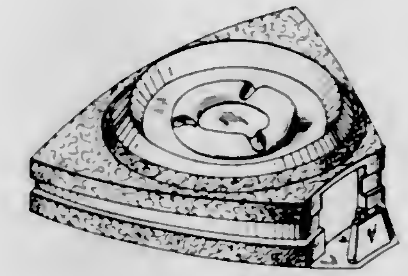

212,066
CONTAINER FOR STORING DENTURES OR THE LIKE
Ted Seller, Birch Lane, Greenwich, Conn. 06830
Filed Feb. 13, 1967, Ser. No. 5,802
Term of patent 14 years
(Cl. D86—10)

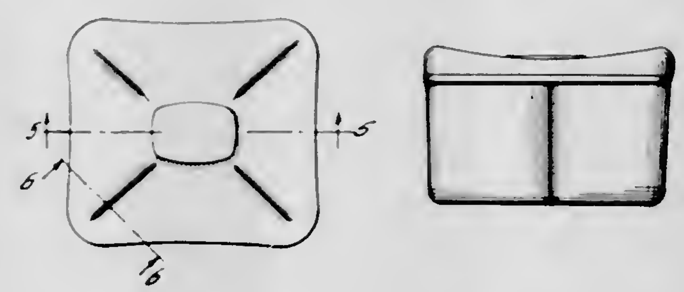

212,067
TWEEZERS
Robert V. Pearce, 500 E. Palmer Ave., Glendale, Calif. 91205
Filed Oct. 2, 1967, Ser. No. 8,815
Term of patent 14 years
(Cl. D86—10)

212,068
VANITY CASE OR SIMILAR ARTICLE
Mary K. Ash, 3523 Northwest Parkway, Dallas, Tex. 75225
Filed Oct. 20, 1967, Ser. No. 9,080
Term of patent 14 years
(Cl. D86—10)

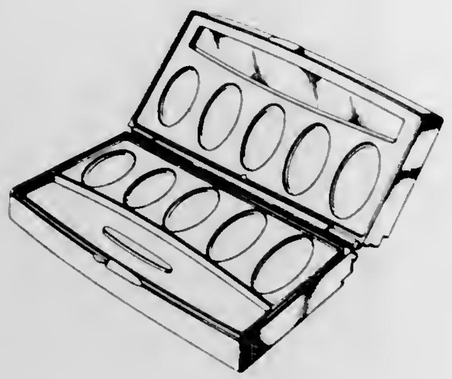

212,069
BICYCLE CHANGE-SPEED CONTROL LEVER
Lucien Charles Hippolyte Juy, 75 Rue General-Fauconnet, Dijon, France
Filed May 15, 1967, Ser. No. 7,104
Claims priority, application France Jan. 21, 1967
Term of patent 14 years
(Cl. D90—1)

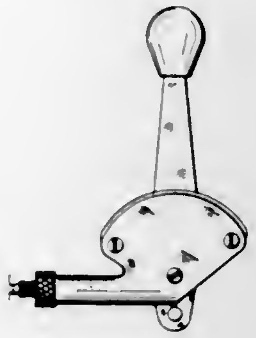

LIST OF PLANT PATENTEES

TO WHOM

PATENTS WERE ISSUED ON THE 20TH DAY OF AUGUST, 1968

NOTE.—Arranged in accordance with the first significant character or word of the name (in accordance with city and telephone directory practice).

Armstrong, David L., and H. C. Swim, to Armstrong Nurseries, Inc. Rose plant. 2,829, 8–20–68, Cl. 18.
Armstrong Nurseries, Inc.: *See*—
  Armstrong, David L., and Swim. 2,829.
Rantz, Louis M. and S. Hybrid tea rose. 2,828, 8–20–68, Cl. 20.
Rantz, Simone: *See*—
  Rantz, Louis M. and S. 2,828.
Swim, Herbert C.: *See*—
  Armstrong, David L., and Swim. 2,829.

LIST OF DESIGN PATENTEES

Abraham, Ernst, to Krone Kommanditgesellschaft. Desk-type telephone. 211,998, 8–20–68, Cl. D26—14.
Anchor Hocking Glass Corp.: *See*—
  Benes, Frank J. 212,023.
  Benes, Frank J. 212,024.
  Benes, Frank J. 212,035.
Appel, Wallace H., and C. A. Peterson, to Westinghouse Electric Corp. Combined tea cart and portable dishwasher. 212,039, 8–20–68, Cl. D49—1.
Araki, Minoru, to Lloyd's Electronics International. High-intensity lamp or similar article. 212,038, 8–20–68, Cl. D48—20.
Argus Inc.: *See*—
  Caldwell, Dale R. 212,055.
Arvin Industries, Inc.: *See*—
  Miles, John K., and Lingle. 212,045.
  Rote, David B. 212,046.
Ash, Mary K. Vanity case or similar article. 212,068, 8–20–68, Cl. D86—10.
Auboeck, Carl, to Olympia Werke AG. Calculating machine. 212,056, 8–20–68, Cl. D64—11.
Baron Trading Co., Ltd.: *See*—
  Yasutomi, Ei. 211,985.
  Yasutomi, Ei. 211,986.
Bausch & Lomb Inc.: *See*—
  Parker, Walter O. 212,048.
Beale, Raymond E. Container for ice cream or the like. 211,977, 8–20–68, Cl. D9—199.
Benes, Frank J., to Anchor Hocking Glass Corp. Covered candy dish or similar article. 212,023, 8–20–68, Cl. D36—2.
Benes, Frank J., to Anchor Hocking Glass Corp. Tumbler or similar article. 212,024, 8–20–68, Cl. D36—8.
Benes, Frank J., to Anchor Hocking Glass Corp. Pitcher. 212,035, 8–20–68, Cl. D44—21.
Billin, Arthur G., to Ritter Pfaudler Corp. Base for a dental chair or the like. 211,984, 8–20–68, Cl. D15—3.
Boothby, Alfons, to Olympia Werke AG. Calculating machine. 212,058, 8–20–68, Cl. D64—11.
Boothby, Alfons, to Olympia Werke AG. Calculating machine. 212,059, 8–20–68, Cl. D64—11.
Boothby, Alfons, to Olympia Werke AG. Calculating machine. 212,060, 8–20–68, Cl. D64—11.
Borden, Inc.: *See*—
  Stohl, Milton R. 212,065.
Bravo, Joel W., to GAF Corp. White print machine. 212,052, 8–20–68, Cl. D61—1.
Brenner, Roy L., to Kinkead Industries Inc. Folding shower door. 211,992, 8–20–68, Cl. D23—69.
Byrne, John R., to Will Ross, Inc. Thermometer holder. 212,043, 8–20–68, Cl. D52—7.
Caldwell, Dale R. Movie camera. 212,054, 8–20–68, Cl. D61—1.
Caldwell, Dale R., to Argus Inc. Movie camera. 212,055, 8–20–68, Cl. D61—1.
Campbell, Michael, and J. E. Lambert, to Hassenfeld Bros. Inc. Urinal drainage bag. 212,064, 8–20–68, Cl. D83—1.
Cannon, Fillmore, to Joseph E. Seagram & Sons, Inc. Merchandise display stand. 212,063, 8–20–68, Cl. D80—9.
Cartiera Di Calrate S.p.A.: *See*—
  Shapira, Nathan. 212,041.
Chemplate Corp.: *See*—
  Zorn, Edward, and Sherwood. 211,987.
Collins, Earl L. Portable podium. 212,012, 8–20–68, Cl. D33—10.
Creative Associates of Albany, Ltd.: *See*—
  Madlem, John R. 212,009.
Cripe, Alan R., to United Aircraft Corp. Dual seat for a passenger vehicle. 211,988, 8–20–68, Cl. D15—8.
Dake, Lee J., to Joslyn Mfg. and Supply Co. Transmission line support structure. 211,995, 8–20–68, Cl. D26—12.
Danz, Ellworth R.: *See*—
  Miley, David W., and Danz. 212,030.
Danz, Ellworth R., to General Time Corp. Clock casing. 212,027, 8–20–68, Cl. D42—7.
Danz, Ellworth, to General Time Corp. Clock casing. 212,029, 8–20–68, Cl. D42—7.
Danz, Ellworth R., to General Time Corp. Clock casing. 212,031, 8–20–68, Cl. D42—7.
David, Thomas H., to The General Industries. Letter opener. 212,062, 8–20–68, Cl. D74—10.
De May Gwilym, to Smith Hayden & Co. Ltd. Apparatus for mixing materials with a flowing liquid. 211,991, 8–20–68, Cl. D23—3.
Douglas, David. Carafe. 211,978, 8–20–68, Cl. D9—139.
Dreyfuss, Henry, to The Singer Co. Sewing machine. 212,061, 8–20–68, Cl. D70—1.
Dru, Rene. Cover for packaging container or the like. 211,979, 8–20–68, Cl. D9—264.
Du-Fold, Inc.: *See*—
  Kelley, David L. 211,981.
Dyamic Instrument Corp.: *See*—
  Mas, Joseph A. 212,007.
Emond, Samuel A. Speaker enclosure. 212,004, 8–20–68, Cl. D26—14.
Eno, Melbourne J. and W. E. Electric heater. 211,993, 8–20–68, Cl. D23—93.
Eno, Wilbur E.: *See*—
  Eno, Melbourne J. and W. E. 211,993.
Fusco, Frank C., and N. C. and W. Gold, Louis Marx & Co., Inc. Typewriter. 212,057, 8–20–68, Cl. D64—11.
GAF Corp.: *See*—
  Bravo, Joel W. 212,052.
  Nederlof, Bastiaan K., Schenderling, and Van Der Stap. 212,050.
General Industries, The: *See*—
  Davis, Thomas H. 212,062.
General Time Corp.: *See*—
  Danz, Ellworth R. 212,027.
  Danz, Ellworth. 212,029.
  Danz, Ellworth R. 212,031.
  Levin, Monte L. 212,026.
  Miley, David W. 212,028.
  Miley, David W. 212,032.
  Miley, David W., and Danz. 212,030.
Gold, Norman C.: *See*—
  Fusco, Frank C., Gold and W. 212,057.
Gold, William: *See*—
  Fusco, Frank C., Gold and W. 212,057.
Goodman, Richard E. Toilet bowl deodorizer. 211,994, 8–20–68, Cl. D23—150.
Gregory, J. E., Co., Inc.: *See*—
  Gregory, Jack E. 212,021.
Gregory, Jack E., to J. E. Gregory Co., Inc. Climbing exercise peg board. 212,021, 8–20–68, Cl. D34—5.
Hallbeck, Thordis G. Insulated food carrier. 212,034, 8–20–68, Cl. D44—1.
Hasegawa, Tetsujiro. Tape recorder or similar article. 211,997, 8–20–68, Cl. D26—14.
Hasenbank, Kenneth N., to Toro Mfg. Corp. Lubricator for lawn mowers and the like. 212,036, 8–20–68, Cl. D46—1.
Hassenfeld Bros. Inc.: *See*—
  Campbell, Michael, and Lambert. 212,064.
Hudson Photographic Industries, Inc.: *See*—
  Martinez, Eugene. 212,053.
Ischinger, Alfred E. Game device or the like. 212,016, 8–20–68, Cl. D34—5.
Jacobs, Carl: *See*—
  Risom, Jens, and Jacobs. 212,011.
Jamison, Egbert G., and R. W. Zick, to Jamison, Inc. Child's combination multiple climber and slide or similar article. 212,018, 8–20–68, Cl. D34—5.
Jamison, Inc.: *See*—
  Jamison, Egbert G., and Zick. 212,018.
Joslyn Mfg. and Supply Co.: *See*—
  Dake, Lee J. 211,995.
Juy, Lucien C. H. Bicycle change-speed control lever. 212,069, 8–20–68, Cl. D90—1.
Kelley, David L., to Du-Fold, Inc. Utility cart. 211,981, 8–20–68, Cl. D14—3.
Kennedy, Donald J. Kite. 212,017, 8–20–68, Cl. D34—15.
Keystone Mfg. Corp.: *See*—
  Salvo, Thomas R. 212,051.
Kilper, Dennis J. Chair. 211,983, 8–20–68, Cl. D15—1.
Kinkead Industries Inc.: *See*—
  Brenner, Roy L. 211,992.

Klamer, Reuben B. Toy figure. 212,013, 8–20–68, Cl. D34—2.
Klamer, Reuben B. Toy figure. 212,014, 8–20–68, Cl. D34—2.
Klamer, Reuben B. Toy figure. 212,015, 8–20–68, Cl. D34—2.
Klimko, Joseph. Stilt. 212,022, 8–20–68, Cl. D34—14.
Krone Kommanditgesellschaft: *See*—
  Abraham, Ernst. 211,998.
Lambert, Joseph E.: *See*—
  Campbell, Michael, and Lambert. 212,064.
Levin, Monte L., to General Time Corp. Clock casing. 212,026, 8–20–68, Cl. D42—7.
Lingle, Odin D.: *See*—
  Miles, John K., and Lingle. 212,045.
Lloyd's Electronics International: *See*—
  Araki, Minoru. 212,038.
Mack, Donald E.: *See*—
  Najjar, William K. 212,020.
MacLevy, Monty: *See*—
  Schawalder, Albert. 212,019.
Madlem, John R., to Creative Associates of Albany, Ltd. Dog's bed. 212,009, 8–20–68, Cl. D30—41.
Mankowski, Edward J. Eye glass hinge unit. 212,047, 8–20–68, Cl. D57—1.
Martinez, Eugene, to Hudson Photographic Industries, Inc. Foldable rear projection viewer or similar article. 212,053, 8–20–68, Cl. D61—1.
Marx, Louis, & Co., Inc.: *See*—
  Fusco, Frank C., Gold and W. 212,057.
Mas, Joseph A., to Dynamic Instrument Corp. Plug-in power supply. 212,007, 8–20–68, Cl. D26—15.
Masnick, Philip, to The Procter & Gamble Co. Paper toweling. 212,049, 8–20–68, Cl. D59—2.
Mechanical Handling Systems, Inc.: *See*—
  Reed, Maynard W. 211,982.
Miles, John K., and O. D. Lingle, to Arvin Industries, Inc. Clock radio. 212,045, 8–20–68, Cl. D56—4.
Miley, David W., to General Time Corp. Clock casing. 212,028, 8–20–68, Cl. D42—7.
Miley, David W., and E. R. Danz, to General Time Corp. Clock casing. 212,030, 8–20–68, Cl. D42—7.
Miley, David W., to General Time Corp. Clock casing. 212,032, 8–20–68, Cl. D42—7.
Najjar, William K., ½₀ interest to D. E. Mack. Combined golf ball and tee retainer. 212,020, 8–20–68, Cl. D34—5.
Nederlof, Bastiaan K., D. W. Schenderling, and H. Van Der Stap, to GAF Corp. Photocopy machine. 212,050, 8–20–68, Cl. D61—1.
North American Philips Co., Inc.: *See*—
  Zijlstra, Rudolph B. 212,040.
Olympia Werke AG.: *See*—
  Auboeck, Carl. 212,056.
  Boothby, Alfons. 212,058.
  Boothby, Alfons. 212,059.
  Boothby, Alfons. 212,060.
Ostrander, Julie R.: *See*—
  Rippl, Harold A. 211,976.
Parker, Walter O., to Bausch & Lomb Inc. Pair of eye protective spectacles. 212,048, 8–20–68, Cl. D57—1.
Partizpanian, Ashot A. Desk telephone set. 212,000, 8–20–68, Cl. D26—14.
Pearce, Robert V. Tweezers. 212,067, 8–20–68, Cl. D86—10.
Pede, Ephraim. Cultivating tool. 212,025, 8–20–68, Cl. D39—1.
Penn Controls, Inc.: *See*—
  Rogers, Ralph F. 211,996.
Performance Products Co.: *See*—
  Rippl, Harold A. 211,976.
Peterson, Carl A.: *See*—
  Appel, Wallace H., and Peterson. 212,039.
Prince, Andrew J. Telephone stand. 211,999, 8–20–68, Cl. D26—14.
Procter & Gamble Co., The: *See*—
  Masnick, Philip. 212,049.
Reed, Maynard W., to Mechanical Handling Systems, Inc. Self-propelled unmanned tractor. 211,982, 8–20–68, Cl. D14—3.
Rexall Drug and Chemical Co.: *See*—
  Swett, James B. 212,033.
Rippl, George A.: *See*—
  Rippl, Harold A. 211,976.
Rippl, Harold A., deceased (by G. A. Rippl, co-executor; J. R. Ostrander, co-executrix), to Performance Products Co. Portable manually operated scraper blade. 211,976, 8–20–68, Cl. D4—26.
Risom, Jens, and C. Jacobs. Drawer for a card catalog cabinet. 212,011, 8–20–68, Cl. D33—1.
Ritter Pfaudler Corp.: *See*—
  Billin, Arthur G. 211,984.
Roberts, Jack C., to Saxton Electronics Corp. Wireless intercom. 212,001, 8–20–68, Cl. D26—14.
Roberts, Jack C., to Saxton Electronics Corp. Musical instrument transmitter device. 212,003, 8–20–68, Cl. D26—14.
Roberts, Jack C., to Saxton Electronics Corp. Musical instrument transmitter housing. 212,005, 8–20–68, Cl. D26—14.
Roberts, Jack C., to Saxton Electronics Corp. Plug-in guitar transmitter housing. 212,006, 8–20–68, Cl. D26—14.
Rodolfo, Daniel A. and R. Insect cage. 211,989, 8–20–68, Cl. D22—19.
Rodolfo, Robert: *See*—
  Rodolfo, Daniel A. and R. 211,989.
Rogers, Ralph F., to Penn Controls, Inc. Rotational knob for controls and the like. 211,996, 8–20–68, Cl. D26—13.
Rogers, William C. Aircraft antenna mast for supporting intermediate portion of antenna wire. 212,002, 8–20–68, Cl. D26—14.
Ross, Will Inc.: *See*—
  Byrne, John R. 212,043.
Rote, David B., to Arvin Industries, Inc. Radio. 212,046, 8–20–68, Cl. D56—4.
Salvo, Thomas R., to Keystone Mfg. Corp. Motion picture camera. 212,051, 8–20–68, Cl. D61—1.
Saxton Electronics Corp.: *See*—
  Roberts, Jack C. 212,001.
  Roberts, Jack C. 212,003.
  Roberts, Jack C. 212,005.
  Roberts, Jack C. 212,006.
Schawalder, Albert, to M. MacLevy. Exerciser. 212,019, 8–20–68, Cl. D34—5.
Schenderling, Dick W.: *See*—
  Nederlof, Bastiaan K., Schenderling, and Van Der Stap. 212,050.
Seagram, Joseph E., & Sons Inc.: *See*—
  Cannon, Fillmore. 212,063.
Seller, Ted. Container for storing dentures or the like. 212,066, 8–20–68, Cl. D86—10.
Shapira, Nathan, to Cartiera Di Cairate S.p.A. Container for paper napkins or the like. 212,041, 8–20–68, Cl. D52—2.
Sherwood, Bert J.: *See*—
  Zorn, Edward, and Sherwood. 211,987.
Singer Co., The: *See*—
  Dreyfuss, Henry. 212,061.
Smith, Clarence E. Fish lure protector. 211,990, 8–20–68, Cl. D22—31.
Smith Hayden & Co. Ltd.: *See*—
  De May, Gwilyn. 212,991.
Steinborn, Bennie. Strap for musical instrument. 211,975, 8–20–68, Cl. D2—393.
Stohl, Milton R., to Borden, Inc. Combined ash tray and tape dispenser. 212,065, 8–20–68, Cl. D85—2.
Swett, James B., to Rexall Drug and Chemical Co. Support for lettuce or the like. 212,033, 8–20–68, Cl. D44—1.
Toro Mfg. Corp.: *See*—
  Hasenbank, Kenneth N. 212,036.
Towlsaver, Inc.: *See*—
  Tucker, Council A. 212,010.
Tucker, Council A., to Towlsaver, Inc. Toilet tissue dispenser. 212,010, 8–20–68, Cl. D33—31.
United Aircraft Corp.: *See*—
  Cripe, Alan R. 211,988.
Van Der Stap, Hendricus: *See*—
  Nederlof, Bastiaan K., Schenderling, and Van Der Stap. 212,050.
Wacker, Lewis D. Stopping distance computer for a key chain. 212,042, 8–20–68, Cl. D52—6.
Wender, Margaret R. Beaded artificial tree or the like. 212,008, 8–20–68, Cl. D29—1.
Wender, Margaret R. Beaded floral candleholder decoration. 212,037, 8–20–68, Cl. D48—2.
Westinghouse Electric Corp.: *See*—
  Appel, Wallace H., and Peterson. 212,039.
Williams, Bailey C. Building or the like. 211,980, 8–20–68, Cl. D13—1.
Woodman, Gerald A. Three-dimensional plastic panel. 212,044, 8–20–68, Cl. D54—2.
Yasutomi, Ei, to Baron Trading Co., Ltd. Barber chair. 211,986, 8–20–68, Cl. D15—3.
Yasutomi, Eii, to Baron Trading Co., Ltd. Barber chair. 211,986, 8–20–68, Cl. D15—3.
Zick, Ronald W.: *See*—
  Jamison, Egbert G., and Zick. 212,018.
Zijlstra, Rudolph B., to North American Philips Co., Inc. Vacuum cleaner. 212,040, 8–20–68, Cl. D49—14.3.
Zorn, Edward and B. J. Sherwood, to Chemplate Corp. Bumper and hitch combination. 211,987, 8–20–68, Cl. D14—6.

LIST OF PATENTEES

TO WHOM

PATENTS WERE ISSUED ON THE 20TH DAY OF AUGUST, 1968

NOTE.—Arranged in accordance with the first significant character or word of the name (in accordance with city and telephone directory practice).

ACF Industries, Inc.: *See*—
  Snyder, Samuel J. 3,397,654.
A.E.M. Division, Power Flo Products, Inc.: *See*—
  Szekely, Otto E. 3,397,597.
AMP, Inc.: *See*—
  Hoffman, Norman E. 3,398,232.
  Klingler, Martin L. 3,397,567.
Abarotin, Eugene V. Mechanism for automatically controllably moving the specimen mounting stage of a microscope. 3,397,656, 8–20–68, Cl. 108—20.
Abbott Laboratories: *See*—
  Horrom, Bruce W. 3,398,155.
Acoustics Development Corp.: *See*—
  Ertl, Edward S., and Hannula. 3,398,244.
Adams, Marlon F., to Inland Container Corp. Reinforced bulk pack container. 3,397,831, 8–20–68, Cl. 229—14.
Addison, George E., to Universal Oil Products Co. Aromatics production process. 3,398,083, 8–20–68, Cl. 208—87.
Addressograph-Multigraph Corp.: *See*—
  Bruning, John V., Patzke, Ghiselli, and Tregay. 3,397,627.
  Granzow, Daniel B., Gawron, Graff, and Swain. 3,397,628.
  Tregay, John L., and Helland. 3,398,259.
Adler, Felix M. Method for constructing pressure vessels. 3,397,503, 8–20–68, Cl. 52—745.
Advance Data Systems Corp.: *See*—
  Foxwell, Gerry H., and Dillingham. 3,397,486.
Aerojet-General Corp.: *See*—
  Caswell, Raymond A. 3,398,373.
  Jarvis, Marvin A., and Stratman. 3,397,785.
Agfa-Gevaert Aktiengesellschaft: *See*—
  Keberle, Wolfgang, Himmelmann, Dieterich, Bayer, and Nittel. 3,397,989.
Air Preheater Co., Inc.: *See*—
  Hawley, Wilbur J., and Merrick. 3,397,826.
Air Products and Chemicals, Inc.: *See*—
  Walde, Robert A. 3,398,199.
Air Reduction Co., Inc.: *See*—
  Benson, Ernest J. 3,398,001.
  Bryant, Horace B., Jr., and Coffman. 3,397,743.
  Sullivan, Edmund T. 3,398,231.
Aktiebolaget Electrolux: *See*—
  Andersson, John N. J. 3,397,716.
Alais, Pierre. Displacement measuring apparatus including diode compensation resistances. 3,398,362, 8–20–68, Cl. 324—61.
Aldenhoff, Bernard J., to Harnischfeger Corp. High speed pulse welding. 3,398,255, 8–20–68, Cl. 219—108.
Alderfer, Sterling, Co.: *See*—
  Alderfer, Sterling W. 3,397,639.
Alderfer, Sterling W., to Sterling Alderfer Co. Reinforced ignition tube. 3,397,639, 8–20–68, Cl. 102—70.
Alfa-Laval AB: *See*—
  Jenssen, Sverre K., Ljungstrom, and Ohlsson. 3,397,742.
Allen, Grant E., Jr., G. P. Robinson, Jr., and R. B. Inman, to Scientific-Atlanta, Inc. Apparatus for packaging. 3,397,506, 8–20–68, Cl. 53—112.
Allen and Hanburys Ltd.: *See*—
  Cook, Ronald J. 3,397,489.
Allen Lloyd R., and R. W. Steeves, to National Research Corp. Vacuum coated product. 3,398,040, 8–20–68, Cl. 161—45.
Allgaier, Oskar, and O. Micko, to Allgaier Werke G.m.b.H. Separator for grain and the like. 3,397,781, 8–20–68, Cl. 209—319.
Allgaier Werke G.m.b.H.: *See*—
  Allgaier, Oskar, and Micko. 3,397,781.
Allied Chemical Corp.: *See*—
  Oxenrider, Bryce C., Litt, and Slavik. 3,398,121.
  Skrypa, Michael J. 3,398,126.
Allied Filter Engineering, Inc.: *See*—
  Mac Donnell, Robert W. 3,397,793.
Allis Chalmers Mfg. Co.: *See*—
  Wohlford, William P., and Taylor. 3,397,471.
Allman, Jack C., and E. F. Elke, to American Can Co. Closure with protective coating and method of manufacture thereof. 3,397,661, 8–20–68, Cl. 113—121.
Allsopp, William C., Jr. Pulsed metering device. 3,397,646, 8–20–68, Cl. 103—149.
Alsco, Inc.: *See*—
  Youssi, Dale J. 3,397,561.
Alsis, Pierre. Displacement measuring apparatus including diode compensating resistances. 3,398,362, 8–20–68, Cl. 324—61.
Altamil Corp.: *See*—
  Tuttle, Wainwright. 3,397,737.
Alumiline Corp., The: *See*—
  Hunt, John E., and Fiore. 3,397,487.
Aluminum Co. of America: *See*—
  MacZura, George, and Gitzen. 3,397,952.
Ameling, Bernhard, to B. Thies. Textile processing machine. 3,397,557, 8–20–68, Cl. 68—10.
American Can Co.: *See*—
  Allman, Jack C., and Elke. 3,397,661.
  Batchelar, Raymond L. 3,397,812.
  Elam, William B., and Jensen. 3,398,037.
  Ronowetz, Stanley E. 3,397,810.
  Taylor, William E. 3,397,807.
American Home Products Corp.: *See*—
  Laliberte, Real, and Campbell. 3,398,144.
  Lefebvre, Yvon, and Ferland. 3,398,138.
  Marshall, David J. 3,398,142.
  Vezina, Claude, and Singh. 3,398,054.
American Machine & Foundry Co.: *See*—
  Buckler, Sheldon A., and Germino. 3,398,015.
  Dearsley, George. 3,397,922.
  Fogle, Robert C. 3,397,771.
  Petrucci, Raymond M., and De Paola. 3,397,642.
  Smith, Richard A. 3,397,889.
American Optical Co.: *See*—
  Kleinerman, Marcos. 3,398,099.
American Telephone and Telegraph Co.: *See*—
  Thomas, Robert L. 3,398,234.
American Tobacco Co., The: *See*—
  Harlow, Edward S., and Wartman. 3,397,700.
Amphenol Corp.: *See*—
  Chow, Weichien. 3,398,388.
Amram et Fils S.A.R.L.: *See*—
  Genin, Robert I., and Wapner. 3,397,467.
Anaconda Wire and Cable Co.: *See*—
  Pendleton, Wesley W., and Ostrander. 3,398,004.
Andersen, Niels C.: *See*—
  Behr, Joseph L., and Andersen. 3,398,360.
Anderson, Benard O.: *See*—
  Beckman, Ernest C., and Anderson. 3,397,906.
Anderson, David W., to McGraw-Edison Co. Distribution transformer having secondary breaker. 3,398,323, 8–20–68, Cl. 317—15.
Anderson, John C., to Engineering Technology, Inc. Filament winding apparatus. 3,397,850, 8–20–68, Cl. 242—158.
Anderson, Patricia T.: *See*—
  Johnson, Robert A., and Anderson. 3,397,991.
Anderson, William W., Jr., to United States of America, National Aeronautics and Space Administration. Semilinear ball bearing. 3,397,932, 8–20–68, Cl. 308—176.
Andersson, John N. J., to Aktiebolaget Electrolux. Control to render discharge pump operable before liquid in a receptacle reaches overflow level. 3,397,716, 8–20–68, Cl. 137—394.
Andre, Henri G., to Yardney International Corp. Electrochemical cell incorporating a unidirectional valve. 3,398,026, 8–20–68, Cl. 136—178.
Andrews, Alday B., and D. L. Coursen, to E. I. du Pont de Nemours and Co. Reduction of explosive shock and noise by dispersion of water particles. 3,397,756, 8–20–68, Cl. 181—33.
Andrews, John S.: *See*—
  Mainguy, Donald N. 3,397,668.
Angeles Metal Trim Co.: *See*—
  Thompson, William J., and Cable. 3,397,495.
Ankerfarm S.p.A.: *See*—
  Zannini, Enzo, Piacenza, and Fabbri. 3,398,057.
Apfelbeck, Otto L., to Westinghouse Electric Corp. Highly accurate frequency measuring circuit. 3,398,366, 8–20–68, Cl. 324—78.
Appleton, N.V., (U.K.), Ltd.: *See*—
  Evans, Henry E. 3,397,904.
Arbeitsgemeinschaft Versuchs-Reaktor AVR G.m.b.H.: *See*—
  Jeltner, Franz, Reinhart, and Semmler. 3,398,052.
Arblaster, Dennis. Patient's file chart clip. 3,397,434, 8–20–68, Cl. 24—255.
Archdale, John H., and C. H. Schmidgall. Artificial limb joint. 3,397,903, 8–20–68, Cl. 287—101.
Archer, Fred C. Hydraulic release for gyratory crushers. 3,397,846, 8–20–68, Cl. 241—286.
Archer, Robert J.: *See*—
  Larsen, Ted L., Archer, and Loebner. 3,398,310.
Arenco Aktiebolag: *See*—
  Henning, Sverker A. 3,397,835.
Argus Chemical Corp.: *See*—
  Pollock, Mark W. 3,398,114.
  Hecker, Arthur C., and Perry. 3,398,115.
Armour Industrial Chemical Co.: *See*—
  Miller, Eugene J., Jr., and Mais. 3,398,196.
  Miller, Eugene J., Jr., and Mais. 3,398,197.
Armstrong, John: *See*—
  Barnes, Stanley C., and Armstrong. 3,398,024.
Armstrong, Robert S. Self-cleaning pipe. 3,397,702, 8–20–68, Cl. 131—183.
Arthur, Edwin P., E. N. Carlsen, and G. W. Stevenson, to Beckman Instruments, Inc. Electrochemical apparatus. 3,398,079, 8–20–68, Cl. 204—195.
Arsenault, James H.: *See*—
  Kamborian, Jacob S., Vorn Berger, and Arsenault. 3,397,417.

A.S.K. & Associates, Inc.: *See*—
Sohns, Lester M. 3,397,496.
Aske, Charles B., Jr., to Gar Wood Industries, Inc. Vehicle wheel trim. 3,397,917, 8-20-68, Cl. 301—37.
Aske, Charles B., Jr., and E. L. Wood, to Gar Wood Industries, Inc. Vehicle wheel trim. 3,397,918, 8-20-68, Cl. 301—37.
Aske, Charles B., Jr., to Gar Wood Industries, Inc. Vehicle wheel trim. 3,397,919, 8-20-68, Cl. 301—37.
Aske, Charles B., Jr., and E. L. Wood, to Gar Wood Industries, Inc. Means for securing vehicle wheel trim to vehicle wheels. 3,397,920, 8-20-68, Cl. 301—37.
Aske, Charles B., Jr., to Gar Wood Industries, Inc. Vehicle wheel trim. 3,397,921, 8-20-68, Cl. 301—37.
Associated Octel Co., Ltd., The.: *See*—
Peres, Robert L. 3,397,576.
Atlantic Richfield Co.: *See*—
Meyers, Joseph A., III, and Shay. 3,398,163.
Atlantic Water Treatment Co., Inc.: *See*—
Bartell, Rudy, and McKee. 3,398,090.
Atlas Chemical Industries, Inc.: *See*—
Galvin, Thomas J., and Hughes. 3,397,953.
Atomic Power Development Associates, Inc.: *See*—
Yevick, John G., and Brill. 3,398,050.
Augustine, Alfred, to Loftus Engineering Corp. Soaking pit and method of operating the same. 3,397,874, 8-20-68, Cl. 263—40.
Austin, Glenn M.: *See*—
Seiferth, Oscar E., and Austin. 3,397,775.
AVI Alpenlandische Veredelungs-Industrie Gesellschaft m.b.H.: *See*—
Ritter, Josef, and Gott. 3,397,565.
Avco Corp.: *See*—
Langberg, Edwin. 3,398,321.
Avedissian, Michael K., and J. S. Manowczak, to Western Electric Co., Inc. Sequential wire and article-bonding methods. 3,397,451, 8-20-68, Cl. 29—589.
Aversa, Joseph. Cosmetic devices. 3,397,707, 8-20-68, Cl. 132—79.
Avery Products Corp.: *See*—
Turner, Stanley. 3,398,014.
Avesta Jernverks Aktiebolog: *See*—
Johansson, Johan I. 3,397,443.
Azzalin, Bruno: *See*—
Gassino, Teresio, and Azzalin. 3,397,837.
Babcock & Wilcox, Ltd.: *See*—
Moegling, Eugen. 3,397,677.
Badall, Joseph A., to Olin Mathieson Chemical Corp. Trigger, sear, safety assembly. 3,397,474, 8-20-68, Cl. 42—70.
Backstein, Gunter: *See*—
Harnau, Hans-Dieter, and Backstein. 3,398,302.
Badger Mfg. Corp.: *See*—
Splawski, Joseph M. 3,397,519.
Badger, William C., and G. W. Mason, to General Motors Corp. Flexible vane and variable vane cascades. 3,397,836, 8-20-68, Cl. 230—114.
Badische Anilin- & Soda-Fabrik Aktiengesellschaft: *See*—
Ball, Werner, and Hahn. 3,398,134.
Behnert, Johannes. 3,398,132.
Kindler, Hubert, Soenksen, and Wittwer. 3,398,183.
Strohmeyer, Max, Hiller, Scholz, and Kindler. 3,398,206.
Bagno, Samuel M. Method for making wall structure impervious to moisture. 3,398,071, 8-20-68, Cl. 204—130.
Bailey, Joseph, to Eastman Kodak Co. Dyes for photographic filter and antihalation layers. 3,398,145, 8-20-68, Cl. 260—240.4.
Baker, James J.: *See*—
Owens, Carl W. and B. 3,397,745.
Baker, Robert A., and R. C. Doerr, to International Copper Research Association. Prereduced cupric oxide-cobaltic oxide redox catalysts. 3,398,101, 8-20-68, Cl. 252—466.
Baldwin, John L. E., and J. D. Millward, to Rank-Bush Murphy, Ltd. Headwheel speed control system for reproducing magnetically recorded television signals. 3,398,235, 8-20-68, Cl. 178—6.6.
Baldwin, Ralph E., to General Motors Corp. Furnace and burner for testing temperature probes. 3,397,569, 8-20-68, Cl. 73—1.
Ball, Werner, and E. Hahn, to Badische Anilin- & Soda-Fabrik Aktiengesellschaft. Reactive azo dyes derived from 3-(4-aminophenyl)-5-chloro-1,2,4-thiodiazole as the diazo component. 3,398,134, 8-20-68, Cl. 260—157.
Banas, Henry C., to McDonnell Douglas Corp. Latch assembly. 3,397,432, 8-20-68, Cl. 24—201.
Bangor Punta Operations, Inc.: *See*—
Ritchie, Charles I., and Karpac. 3,397,873.
Banse, George, to National Mfg. Co. Latch assembly for closure. 3,397,905, 8-20-68, Cl. 292—5.
Barben, Ian K., and C. V. Stead, to Imperial Chemical Industries Ltd. Water-soluble reactive disazo triazine containing dyestuffs. 3,398,133, 8-20-68, Cl. 260—153.
Barber, Edward G.: *See*—
Roper, Alec N., and Barber. 3,398,105.
Barnard, Robert D.: *See*—
Steffanson, Robert S., Barnard, and Johnson. 3,398,080.
Barnes, Leslie: *See*—
Davies, David O., Barnes, and Burrows. 3,397,536.
Barnas, Louis A., Jr., S. J. Dokos, and W. A. Patzer, to Sunbeam Corp. Electric shaver with oscillating output shaft driven by reciprocating motor. 3,397,456, 8-20-68, Cl. 30—43.9.
Barnes, Garrett H., Jr., to Dow Corning Corp. Method of synthesizing organosilicon compounds. 3,398,174, 8-20-68, Cl. 260—448.2.
Barnes Mfg. Co.: *See*—
Einerson, Amos M., and Pruner. 3,397,644.
Barnes, Stanley C., and J. Armstrong, to Joseph Lucas (Industries) Ltd. Battery plates. 3,398,024, 8-20-68, Cl. 136—34.
Barnett, John S., to Febco, Inc. Electromechanical transducer and valve operated thereby. 3,397,859, 8-20-68, Cl. 251—11.
Barney, George H. Experimental animal cage. 3,397,676, 8-20-68, Cl. 119—15.
Baron, Morris: *See*—
Elenbogen, Gilbert D., and Baron. 3,397,994.
Baronnier, Jean-Henri, and G. L. Pagni, to Rhone-Poulenc S.A. Process for the preparation of organopolysiloxanes. 3,398,117, 8-20-68, Cl. 260—46.5.
Baronnier, Jean-Henri, and G. L. Pagni, to Rhone-Poulenc S.A. Process for the preparation of organopolysiloxanes. 3,398,118, 8-20-68, Cl. 260—46.5.
Barringer, Anthony R., and J. F. White, to Barringer Research Ltd. Groundwater survey method and apparatus. 3,398,355, 8-20-68, Cl. 324—.5.
Barringer Research Ltd.: *See*—
Barringer, Anthony R., and White. 3,398,355.
Barrow, Marvin A. Fruit picker. 3,397,526, 8-20-68, Cl. 56—340.
Bartell, Rudy, and H. A. McKee, to Atlantic Water Treatment Co., Inc. Ion exchange water treatment using vibratory agitation. 3,398,090, 8-20-68, Cl. 210—19.
Basehore, Carl J., and L. J. Webb. Photoelectric wall switch with means to illuminate the operating surface. 3,398,290, 8-20-68, Cl. 250—239.
Basile, Norman K., T. F. Bridges, and G. R. Knight, Jr., to J. J. McMullen. Hatch arrangement for liquefied gas storage tanks. 3,397,662, 8-20-68, Cl. 114—74.
Batchelar, Raymond L., to American Can Co. Easy-open container end with reinforcing bead. 3,397,812, 8-20-68, Cl. 220—54.
Batten, Ronald W., to Hi-Shear Corp. Unitized brake for a fastener-setting driver. 3,397,601, 8-20-68, Cl. 81—56.
Batzer, Thomas H., C. A. Gunderson, and J. J. Murphy, to United States of America, Atomic Energy Commission. Wedge gate vacuum valve mechanism with coated seat seal. 3,397,862, 8-20-68, Cl. 251—204.
Bauder, Warren F.: *See*—
Downey, Edward J., Jr., Bauder, and Cramm. 3,398,313.
Baun, Leonard J., to Radio Corp. of America. Transistorized sync stripper. 3,398,298, 8-20-68, Cl. 307—235.
Baurain, Thomas S., and G. J. Qnaal, to Dow Corning Corp. Water repellent treatment. 3,398,017, 8-20-68, Cl. 117—123.
Bayer, Otto: *See*—
Keberle, Wolfgang, Himmelmann, Dieterich, Bayer, and Nittel. 3,397,989.
Bazin, Lucas J., to Radio Corp. of America. Horizontal deflection linearity control circuit. 3,398,318, 8-20-68, Cl. 315—27.
Beaird, Francis M., Jr.: *See*—
Giraitis, Albert P., Kobetz, and Beaird. 3,398,171.
Beasley, Harold E.: *See*—
Hanlon, Donald V., and Beasley. 3,397,834.
Beatrice Foods Co.: *See*—
Noznick, Peter P., and Tatter. 3,397,992.
Beck, Roland D., to Robertshaw-Controls Co. Unbalance valve with lid reset. 3,398,346, 8-20-68, Cl. 318—460.
Beckman, Ernest C., and B. O. Anderson, to Modern Metal Products Co. Hood and deck latch. 3,397,906, 8-20-68, Cl. 292—29.
Beckman Instruments, Inc.: *See*—
Arthur, Edwin P., Carlsen, and Stevenson. 3,398,079.
Bedford, Timothy J. Water craft. 3,397,670, 8-20-68, Cl. 115—70.
Behr, Joseph L., and N. C. Andersen, to Sperry Rand Corp. Magnetic body detector sensitive only to magnetic field variations within a predetermined range. 3,398,360, 8-20-68, Cl. 324—43.
Bell, Frank W., to Standard Screw Co. Adjustable stop tube. 3,397,863, 8-20-68, Cl. 251—285.
Bell Punch Co., Ltd.: *See*—
Drage, James J. 3,398,265.
Bell Telephone Laboratories, Inc.: *See*—
Gottlieb, Melvin H. 3,398,025.
McGean, Thomas J. 3,397,442.
Ostendorf, Bernard, Jr. 3,398,403.
Bellin, Richard H., to Shell Oil Co. Coated 2,2-dichlorovinyl phosphate and polyvinyl chloride resin anthelmintic compositions. 3,398,225, 8-20-68, Cl. 424—34.
Beloit Corp.: *See*—
Jones, David H. 3,397,718.
Mahoney, Ralph P., and Phillips. 3,397,673.
Bemis Co., Inc.: *See*—
Goodwin, Ralph C. 3,397,622.
Benbow, Eugene C., to Westinghouse Electric Corp. Register device wherein indicator is restrained against undesirable movement. 3,398,367, 8-20-68, Cl. 324—103.
Bendix Corp., The: *See*—
James, Robert L. 3,398,345.
Bendix-Westinghouse Automotive Air Brake Co.: *See*—
Lederer, Robert C. 3,397,924.
Bengtsson, Sigurd W. Winders for fishing lines. 3,397,480, 8-20-68, Cl. 43—54.5.
Benson, Ernest J., to Air Reduction Co., Inc. Process of preparing and packaging frozen avocados. 3,398,001, 8-20-68, Cl. 99—193.
Bentley Engineering Co., The: *See*—
Wainwright, Carlyle H. 3,397,554.
Wood, Gillies. 3,397,556.
Berend, Peter M., to Rubbermaid Inc. Rotary tiered canister set. 3,397,805, 8-20-68, Cl. 220—23.86.
Berg Mfg. & Sales Co.: *See*—
Dobrikin, Harold L. 3,397,925.
Kobnick, Werner. 3,397,516.
Berger, Leo, A. Stempel, L. H. Sternbach, and E. Wenis, to Hoffmann-La Roche Inc. Aminophenyl heterocyclic ketones. 3,398,159, 8-20-68, Cl. 260—326.5.

Bergman, Carl A.: *See*—
Hort, Eugene V., and Bergman. 3,397,744.
Bergmann, Oswald R., G. R. Cowan, and A. H. Holtzman, to E. I. du Pont de Nemours and Co. Bonding metals with explosives. 3,397,444, 8-20-68, Cl. 29—470.1.
Berlin, Irving: *See*—
Swart, Robert, and Berlin. 3,398,326.
Berry, Hollis M., to The Carter's Ink Co. Marking instrument. 3,397,939, 8-20-68, Cl. 401—198.
Berueffy, Robert R. Gas analysis unit. 3,397,965, 8-20-68, Cl. 23—230.
Besson, Francis, and B. Krebs, to Girard-Perregaux et Cie, S.A. Regulating device for a time movement. 3,397,530, 8-20-68, Cl. 58—112.
Betts, Minford E., and R. L. Hatton, to The Kansas City Star Co. Registration control system for preprinted web insertion. 3,397,634, 8-20-68, Cl. 101—248.
Beuzeval, Douglas R., to Buell Engineering Co., Inc. Classification apparatus. 3,397,780, 8-20-68, Cl. 209—137.
Bewalda, Robert A., Jr.: *See*—
Skelton, Darold M., Schultz, and Bewalda. 3,397,620.
Bezgela, Eugene G.: *See*—
Gill, Merrion D., and Bezgela. 3,397,929.
Bianchi, Mario: *See*—
Fusco, Raffaello, and Bianchi. 3,398,158.
Bibeau, Emile L., and M. T. Child retainer having sounding means. 3,397,482, 8-20-68, Cl. 46—175.
Bibeau, Muriel T.: *See*—
Bibeau, Emil L., and M. T. 3,397,482.
Biedess, Anthony R., to Westinghouse Air Brake Co. Means for steering an unattended vehicle along a trench. 3,397,651, 8-20-68, Cl. 104—244.1.
Bingeman, Jonas B.: *See*—
Leibson, Irving, and Bingeman. 3,398,129.
Biological Research, Inc.: *See*—
Plumpe, William H., Jr. 3,398,343.
Birch, Peter: *See*—
Littlehales, Herbert J., and Birch. 3,397,843.
Bird, Frank W.: *See*—
Stolz, Walter A., Krafft, and Bird. 3,397,572.
Bird Machine Co.: *See*—
Ferney, Francis X. 3,398,093.
Bittmann, Charles A., and C.-T. Sah, to Fairchild Camera and Instrument Corp. Method of forming a metal rectifying contact to semiconductor material by displacement plating. 3,397,450, 8-20-68, Cl. 29—578.
Blanford, William F.: *See*—
Creager, Paul, Jr., Blanford, and Harrower. 3,397,692.
Blasi, John K. Isometric exercising and strength-testing device. 3,397,884, 8-20-68, Cl. 272—83.
Blatz, Paul E., and S. A. Williams, Jr., to Mobil Oil Corp. Viscous aqueous solution. 3,398,094, 8-20-68, Cl. 252—8.55.
Bloch, Herman S., and E. L. Pollitzer, to Universal Oil Products Co. Homopolymerization of ethylene for the production of solid and liquid polymers. 3,398,131, 8-20-68, Cl. 260—94.9.
Blood, Raymond, and E. Start, to William Cotton, Ltd. Machine latch guard. 3,397,555, 8-20-68, Cl. 66—88.
Blumenfeld, John F., to Emhart Corp. Air stream device for cooling glass furnace electrodes. 3,398,228, 8-20-68, Cl. 13—6.
Bobinski, Jack, and Y. P. Carignan, to United States of America, Navy. Combustible and consumable cartridge cases. 3,397,637, 8-20-68, Cl. 102—38.
Bock, Ashley P., F. E. Henry, and J. A. Redmond, to Westinghouse Electric Corp. Heat treatment apparatus. 3,398,252, 8-20-68, Cl. 219—10.61.
Bock, Robert V.: *See*—
Carlson, Carl B., and Bock. 3,398,405.
Bodem, Roy C.: *See*—
Merrick, Glenn O., Dafler, and Bodem. 3,398,306.
Boeing Co., The: *See*—
Krogstad, Reuben S. 3,398,287.
Boese, Arthur H., to Novel Ideas Inc. Launching and release means for airborne toys. 3,397,481, 8-20-68, Cl. 46—86.
Bohme Fettchemie G.m.b.H.: *See*—
Heyden, Rudi, and Plapper. 3,397,941.
Bokhoven, Cornelis, and W. J. Hanssen, to Stamicarbon N. V. Device for detecting variations in the oxygen content of gasses containing small amounts of oxygen. 3,398,358, 8-20-68, Cl. 324—29.
Boldery, Luther E., ¼ to Fred M. Sturm. Barge and hitch therefor. 3,397,667, 8-20-68, Cl. 114—235.
Bolen, Kenneth E., M. E. Larkin, and N. R. Wilson, to Phillips Petroleum Co. Thin-walled container and method of making the same. 3,397,724, 8-20-68, Cl. 150—.5.
Bolkow Gesellschaft mit beschrankter Haftung: *See*—
Schubert, Johannes. 3,397,539.
Bolstad, Archibald N., and J. M. Hoyt, to Minnesota Mining and Mfg. Co. Copolymers of fluorinated dienes and process for preparing same. 3,398,128, 8-20-68, Cl. 260—87.7.
Bondurant, Louis E., and F. R. Bordeaux, said Bordeaux assor. to said Bondurant. Universal fountain solution for planographic printing. 3,398,002, 8-20-68, Cl. 106—2.
Bonfils, Rene, and H. Des Rochettes, to Pechiney-Compagnie de Produits Chimiques et Electrometallurgiques. Prebaked carbon anodes and anode assembly for the production of aluminum. 3,398,081, 8-20-68, Cl. 204—286.
Bongers, Paul J. W. H. M., to Stamicarbon, N. V. Slide bearing. 3,397,931, 8-20-68, Cl. 308—141.
Bonvhard, Peter I.: *See*—
Walker, Peter A., Maller, and Bonvhard. 3,398,299.
Boor, John, Jr., to Shell Oil Co. Catalyst and process for polymerization. 3,398,130, 8-20-68, Cl. 260—93.7.
Bordeaux, Francis R.: *See*—
Bondurant, Louis E., and Bordeaux. 3,398,002.
Borg-Warner Corp.: *See*—
Lindquist, Terry K. 3,397,761.
Boroson, Norman H., to Thiokol Chemical Corp. Valve having a rupturable seal assembly. 3,397,712, 8-20-68, Cl. 137—68.
Bowers, Donald R., to The Hoover Co. Delay switch for reversing electric motors. 3,398,250, 8-20-68, Cl. 200—187.
Bowman, Roger-Edgar: *See*—
Pillersdorf, Arthur, Kuhn, and Bowman. 3,398,007.
Braden, Ralph S., to General Motors Corp. Forced air drying system for a dishwasher. 3,397,708, 8-20-68, Cl. 134—57.
Brayley, Elwin J.: *See*—
Noddin, Ray C., Brayley, and Swift. 3,398,353.
Bretford Mfg., Inc.: *See*—
Petrick, Russell E. 3,397,464.
Brewer, Nathaniel, to Fischer & Porter Co. Flowmeters having magnetic follower. 3,398,305, 8-20-68, Cl. 310—104.
Brewster, Arthur E., to International Standard Electric Corp. Communication system utilizing photosensitive arrays. 3,398,289, 8-20-68, Cl. 250—238.
Brichard, Edgard, and A. Malicheff. Glass batch melting process. 3,397,972, 8-20-68, Cl. 65—27.
Bridges, Thomas F.: *See*—
Basile, Norman K., Bridges, and Knight. 3,397,662.
Brill, Edward F.: *See*—
Yevick, John G., and Brill. 3,398,050.
Brishka, Alexander R. Hermetically sealed connectors. 3,398,391, 8-20-68, Cl. 339—94.
British Petroleum Co. Ltd., The: *See*—
Holmes, Peter D., Pitkethly, and Thornhill. 3,398,084.
Brock, Eugene W., to General Motors Corp. Vehicle sequential signalling system. 3,398,399, 8-20-68, Cl. 340—82.
Broestl, Edward A.: *See*—
Kornick, John B., and Broestl. 3,937,626.
Brom, Marvin L.: *See*—
Rex, Charles H., and Brom. 3,398,273.
Brooker, Leslie G. S.: *See*—
Lincoln, Lewis L., and Brooker. 3,397,981.
Brosius, Arthur G., Sr. Automotive safety device. 3,397,911, 8-20-68, Cl. 297—216.
Browder, Henry P.: *See*—
Zygmunt, Walter A., and Browder. 3,398,056.
Brown, John S., to Standard Oil Co. Polybutene continuous metal casting lubrication process. 3,397,734, 8-20-68, Cl. 164—73.
Brown, Lawrence E., and P. T. Jones, to Varian Associates. Electron beam X-ray generator with rotatable target movable along axis of rotation. 3,398,307, 8-20-68, Cl. 313—60.
Browning, Bruce W., to Browning Industries, Inc. Cartridge extractor and extractor spring therefor. 3,397,473, 8-20-68, Cl. 42—25.
Browning, Espey T. Scraping blade attachment for a rake. 3,397,469, 8-20-68, Cl. 37—53.
Browning Industries, Inc.: *See*—
Browning, Bruce W. 3,397,473.
Bruce, Edward: *See*—
Lavendel, Henry W., Bruce, Clauss, Elliot, and Kuczynski. 3,397,968.
Brucher, Hans: *See*—
Schatz, Gunther, Gemeinhardt, Brucher, and Jurisch. 3,398,223.
Brueggemann, Harry P., to The Marquardt Corp. Frequency modulated radiant energy scanner employing cavitation-induced diffraction. 3,397,605, 8-20-68, Cl. 88—1.
Brueggemann, Harry P.: *See*—
Frayne, John G., and Brueggemann. 3,397,936.
Bruning, John V., R. C. Patzke, W. A. Ghiselli, Jr., and J. L. Tregay, to Addressograph-Multigraph Corp. Photoelectrostatic copying machine. 3,397,627, 8-20-68, Cl. 95—1.7.
Bruno, Charles F., to E. R. Squibb & Sons, Inc. Separation and purification of cellulase. 3,398,055, 8-20-68, Cl. 195—66.
Brust, Bernard, R. I. Fryer, and L. H. Sternbach, to Hoffmann-La Roche Inc. 2-aliphatic-1,3-di(4-pyridyl)-2-propanols. 3,398,156, 8-20-68, Cl. 260—296.
Bryant, Horace B., Jr., and L. T. Coffman, to Air Reduction Co., Inc. Removal of foreign element from a well. 3,397,743, 8-20-68, Cl. 166—42.
Budd, John M., Jr., to Honeywell Inc. Voltage control apparatus. 3,398,354, 8-20-68, Cl. 323—6.
Buchanan, William T., and C. R. Hedenstad, to Nalco Chemical Co. Process for manufacturing phosphoric acid. 3,397,956, 8-20-68, Cl. 23—165.
Buck, Daniel C., to Westinghouse Electric Corp. Traveling wave tube having means for removing slow electrons from electron beam. 3,398,314, 8-20-68, Cl. 315—3.5.
Buckler, Sheldon A., and F. J. Germino, to American Machine & Foundry Co. Amylose film. 3,398,015, 8-20-68, Cl. 117—118.
Buell Engineering Co., Inc.: *See*—
Beuzeval, Douglas R. 3,397,780.
Burbine, William G.: *See*—
Jordan, Merrill E., Burbine, Cole, and Petterson. 3,397,961.
Burch, Paul F., to Wolverine World Wide, Inc. Singeing machine and method. 3,397,423, 8-20-68, Cl. 17—20.
Burhans, Allison S.: *See*—
Soldatos, Anthony C., and Burhans. 3,398,102.
Burke, James De Jarnette, Jr., and C. O. Hawkins, to E. I. du Pont de Nemours and Co. Sealed vented insert spinneret. 3,397,427, 8-20-68, Cl. 18—8.
Burkhart, William H., Jr. Tool manufacture. 3,397,599, 8-20-68, Cl. 76—107.
Burlington Engineering Sales, Co., Inc.: *See*—
Davis, Thomas E. 3,397,558.
Burroughs Corp.: *See*—
Carlson, Carl B., and Bock. 3,398,405.
Lee, Edwin S., III. 3,398,404.
Burrows, Arthur A.: *See*—
Davies, David O., Barnes, and Burrows. 3,397,536.

Bush, James, to Marine International, Inc. Range switching for pressure gauge. 3,397,581, 8-20-68, Cl. 73—407.
Bush, Robin B. Flexible coupling for a seat. 3,397,912, 8-20-68, Cl. 297—355.
Bushmeyer, Richard W., to J. I. Case Co. Valve for concrete pump or similar machine. 3,397,860, 8-20-68, Cl. 251—61.1.
Butte, Walter A., Jr., to Sun Oil Co. Selective isopropylation of pseudocumene. 3,398,207, 8-20-68, Cl. 260—671.
CF & I Steel Corp.: See—
Lovelett, William C. 3,397,721.
C.S.M. Corp.: See—
Ogle, Robert W. 3,397,694.
Cable, Daniel K.: See—
Thompson, William J., and Cable. 3,397,495.
Cabot Corp.: See—
Deery, Hugh J. 3,398,009.
Hardy, John F., and Gridley. 3,398,109.
Jordan, Merrill E., Burbine, Cole, and Petterson. 3,397,961.
Caldwell, John R., to Eastman Kodak Co. Hydrophobic polyhydrocarbon substrates coated with cycopientadiene homo polymer. 3,398,020, 8-20-68, Cl. 117—138.8.
Caldwell, John R.: See—
Jackson, Winston J., Jr., and Caldwell. 3,398,212.
California Institute Research Foundation: See—
Toth, Louis R., and Keller. 3,397,794.
Campbell, Carl. Process and apparatus for carbonizing fuel 3,398,058, 8-20-68, Cl. 201—15.
Campbell, David J.: See—
Laliberte, Real, and Campbell. 3,398,144.
Cane, Domenick, K. A. Katzor, and T. J. Rabas, to Westinghouse Electric Corp. Multistate flash evaporator with induced jump. 3,398,059, 8-20-68, Cl. 202—173.
Caplan, David M., to W. J. Voit Rubber Corp. Tether ball 3,397,887, 8-20-68, Cl. 273—58.
Cardwell, Lloyd, to Cardwell Westinghouse Co. Railway truck bolster dampener. 3,397,652, 8-20-68, Cl. 105—193.
Cardwell Westinghouse Co.: See—
Cardwell, Lloyd. 3,397,652.
Carignan, Yvon P.: See—
Bobinski, Jack, and Carignan. 3,397,637.
Carlsen, Ernest N.: See—
Arthur, Edwin P., Carlsen, and Stevenson. 3,398,079.
Carlson, Carl B., and R. V. Bock, to Burroughs Corp. Digital computer with memory lock operation. 3,398,405, 8-20-68, Cl. 340—172.5.
Carlson, Edward R., to The Presray Corp. Sealable closure. 3,397,490, 8-20-68, Cl. 49—482.
Carlson, Robert L., to W. H. Miner, Inc. Coupler device. 3,397,798, 8-20-68, Cl. 213—22.
Carmichael, Keith S., to E. I. du Pont de Nemours and Co. Heat shrinking apparatus. 3,397,465, 8-20-68, Cl. 34—225.
Carpenter, James H.: See—
Smith, Verle C., and Carpenter. 3,398,003.
Carpenter, William R.: See—
Jacobsen, John B., and Carpenter. 3,398,023.
Carr, Hugh B., to S. P. Kinney Engineers, Inc. Twin basket strainer with pressure-responsive backwash means. 3,397,784, 8-20-68, Cl. 210—108.
Carrier Corp.: See—
O'Hara, Arthur C. 3,397,740.
Carter, Howard J., to Interstate Electronics Corp. Oceanographic apparatus. 3,397,573, 8-20-68, Cl. 73—170.
Carter's Ink Co., The: See—
Berry, Hollis M. 3,397,939.
Casanova, Louis: See—
Kilgore, Lee A., Spindle, Casanova, and Dakin. 3,398,348.
Case, J. I., Co.: See—
Bushmeyer, Richard W. 3,397,860.
Caskey, Viviane: See—
Owens, Carl W., and B. 3,397,745.
Cast, Adolf, and K. Reich, to Karl M. Reich, Maschinenfabrik. Pneumatic percussion machine. 3,397,617, 8-20-68, Cl. 91—41.
Caswell, Raymond A., to Aerojet-General Corp. Pulse train median error detector and compensator. 3,398,373, 8-20-68, Cl. 328—163.
Cataldo, John B., and F. W. Kussy, to I-T-E Circuit Breaker Co. Electrical interlock means. 3,398,329, 8-20-68, Cl. 317—136.
Caterpillar Tractor Co.: See—
Denney, Omer F., and Page. 3,397,898.
Catino, Sigmund C., and A. F. Strobel, to GAF Corp. Process for the preparation of 4,4'-bis-(4-amino-6-arylamino-s-triazin-2-yl-amino)2,2'stilbenedisulfonic acid. 3,398,143, 8-20-68, Cl. 260—240.
Catlow, Ronald, P. A. Shaw, and R. Hart, to Rolls-Royce Ltd. Bladed rotor for a fluid flow machine such as a gas turbine engine. 3,397,865, 8-20-68, Cl. 253—77.
Caton, Myron: See—
McCann, Gerald P., and Caton. 3,397,870.
Cavanaugh, Marion E., to LTV Aerospace Corp. D-C load switching and protective circuits without mechanical contacts. 3,398,324, 8-20-68, Cl. 317—16.
Celanese Corp.: See—
MacLean, Alexander F., and Hobbs. 3,398,185.
Cella, Richard T. Rotary vane pressure toilet. 3,397,410, 8-20-68, Cl. 4—77.
Celli, Aldo, 40% to H. H. Gleisner, and 20% to Frank Mariano. Ski boot tree. 3,397,416, 8-20-68, Cl. 12—120.5.
Cello Chemical Co., The: See—
Okun, Nathaniel N. 3,397,419.
Ceskoslovenska akademie ved: See—
Mackrle, Svatopluk, Mackrle, Dracka, Halamek, Paseka, and Polasek. 3,398,089.
Chamberlin Mfg. Corp.: See—
Goldstein, Richard. 3,397,488.
Champ, Roger, M. Martin, and L. Winand, 50% to Produits Chimiques Pechiney-Saint-Gobain, and 50% to Union Chemique Chemische Bedrijven. Purification of phosphoric acid derived from phosphate rock. 3,397,955, 8-20-68, Cl. 23—165.
Champion Laboratories, Inc.: See—
Hultgren, William H. 3,397,786.
Champlin, Charles L., to Packaging Corp. of America. Reclosable folding carton and blank therefor. 3,397,833, 8-20-68, Cl. 229—51.
Chandler Evans, Inc.: See—
Mastriforte, Otil F., and Faulds. 3,397,894.
Chang, Henry M. Beverage containers. 3,397,830, 8-20-68, Cl. 229—7.
Chappell, Sterling F., and R. F. Clark, to Columbian Carbon Co. Olefin isomerization process. 3,398,205, 8-20-68, Cl. 260—666.
Chemerda, John M., G. Gal, and M. Sletzinger, to Merck & Co., Inc. Process for preparing benzimidazole N-oxides. 3,398,187, 8-20-68, Cl. 260—302.
Chemetron Corp.: See—
Godshalk, Henry W., and Willis. 3,398,113.
Cherry-Burrell Corp.: See—
Thiele, Edward G. 3,397,832.
Chessman, Harry: See—
Phillipson, Alan, Spiller, Smith, and Chessman. 3,397,425.
Chetakian, Edward, to The Norac Co., Inc. Polymerization of cobalt containing unsaturated polyester resins. 3,398,213, 8-20-68, Cl. 260—863.
Chow, Weichien, to Amphenol Corp. Universal electrical connector. 3,398,388, 8-20-68, Cl. 339—49.
Christmann, Harold F., to Petro-Tex Chemical Corp. Iron and phosphorus containing compositions. 3,398,100, 8-20-68, Cl. 252—435.
Citizen Tokei Kabushiki Kaisha: See—
Mori, Tadamichi, and Tanabe. 3,397,629.
Citro, Angelo M., to The Leece-Neville Co. Load circuit control for generating system. 3,398,347, 8-20-68, Cl. 320—25.
Clark, Harold A.: See—
Plueddemann, Edwin P., and Clark. 3,398,210.
Clark, Reginald F.: See—
Chappell, Sterling F., and Clark. 3,398,205.
Clauss, Francis J.: See—
Lavendel, Henry W., Bruce, Clauss, Elliot, and Kuczynski. 3,397,968.
Clayton, Robert E., and B. M. Vanderbilt, to Esso Research and Engineering Co. Bonding rubbery polyolefins to organic materials. 3,398,045, 8-20-68, Cl. 161—208.
Cleereman, Kenneth J., and D. J. Dirkse, to The Dow Chemical Co. Thermolamination of plastic sheet to foam substrates. 3,398,035, 8-20-68, Cl. 156—244.
Clegg, Frederick W.: See—
Marshall, Robert S., and Clegg. 3,397,412.
Clinton, Raymond O., to Sterling Drug Inc. Steroido [17.16-c] pyrozoles and preparation thereof. 3,398,140, 8-20-68, Cl. 260—239.5.
Cochrum, William A., to The Fastron Co. Device for clamping wires to terminals. 3,398,393, 8-20-68, Cl. 339—246.
Coffman, Lyle T.: See—
Bryant, Horace B., Jr., and Coffman. 3,397,743.
Colclaser, Robert G., Jr., to Westinghouse Electric Corp. Circuit breaker testing circuits in which a normally closed pair of contacts in a high current path short circuits a high recovery voltage source and another pair of normally closed contacts forms a low impedance shunt circuit across the high voltage source until both pairs of contacts are opened. 3,398,357, 8-20-68, Cl. 324—28.
Cole, Harvey M.: See—
Jordan, Merrill E., Burbine, Cole, and Petterson. 3,397,961.
Cole, Lawrence R. Visual aid teaching device. 3,397,468, 8-20-68, Cl. 35—63.
Cole Mfg. Co.: See—
Hatcher, John C. 3,397,933.
Colgate-Palmolive Co.: See—
Peters, Wallace W. 3,397,822.
Colins, Irving B.: See—
Piekarski, Leonard. 3,398,328.
Piekarski, Leonard. 3,398,384.
Collins Radio Co.: See—
Hattendorf, Edwin R. 3,398,267.
McGowan, Harold S. 3,397,585.
Columbia Broadcasting System, Inc.: See—
Torick, Emil, and Kaiser. 3,398,381.
Columbian Carbon Co.: See—
Chappell, Sterling F., and Clark. 3,398,205.
Combustion Engineering, Inc.: See—
Hanzalek, Frederick J., and Kane. 3,397,679.
Cominco Ltd.: See—
Thompson, Joshua B., and Hildred. 3,398,191.
Compagnie de Saint-Gobain: See—
Renault, Claude. 3,397,942.
Compagnie du Filage des Metaux et des Joints Curty: See—
Kaprelian, Robert A. 3,397,560.
Concast Inc.: See—
Gricol, Joseph D. 3,397,733.
Conch International Methane Ltd.: See—
Crownover, Carl F., and Every. 3,398,077.
Container Corp. of America: See—
Hanlon, Donald V., and Beasley. 3,397,834.
Smithson, George R., and Hanway. 3,397,957.
Continental Can Co., Inc.: See—
Melton, Roger W. 3,397,803.
Weiss, Arthur J. 3,397,776.
Continental Oil Co.: See—
Every, Richard L., and Grimsley. 3,398,227.
Reichmuth, Donald R. 3,397,751.

Control Data Corp.: See—
Sims, Stuart D., and Daly. 3,398,379.
Controls Co. of America: See—
Giwosky, Harry L. 3,397,550.
Cook, Ronald J., to Allen and Hanburys Ltd. Pressure or vacuum vessels. 3,397,489, 8-20-68, Cl. 49—281.
Coursen, David L.: See—
Andrews, Alday B., and Coursen. 3,397,756.
Corrugated Container Co., The: See—
Currie, Grover C., Jr., and Schieser. 3,397,624.
Couch, George L.: See—
Dwyer, Peter W., and Couch. 3,397,511.
Cowan, George R.: See—
Bergmann, Oswald R., Cowan, and Holtzman. 3,397,444.
Cowley, John J., to Desal Ltd. Process for continuous regenerative distillation of impure water. 3,398,060, 8-20-68, Cl. 203—11.
Cox, Eugene F.: See—
Hostettler, Fritz, and Cox. 3,398,106.
Cramm, Herman W.: See—
Downey, Edward J., Jr., Bauder, and Cramm. 3,398,313.
Crook, Gaines M., to TRW, Inc. Three-axis reversible sensor mount. 3,397,586, 8-20-68, Cl. 74—96.
Crawford, Jay. Book cover turning-in machine. 3,398,038, 8-20-68, Cl. 156—492.
Creager, Paul, Jr., W. F. Blanford, and H. W. Harrower, to Parke, Davis & Co. Protector for incised wounds. 3,397,692, 8-20-68, Cl. 128—132.
Critchell, Dean J., to Eastman Kodak Co. Packaging machine. 3,397,505, 8-20-68, Cl. 53—74.
Crowe, William P., and D. J. Murphy, Jr., to General Electric Co. Ice maker including improved sweep means. 3,397,553, 8-20-68, Cl. 62—353.
Crownover, Carl F., and R. L. Every, to Conch International Methane Ltd. Electrostatic charging of solid CO particles in liquid gas. 3,398,077, 8-20-68, Cl. 204—180.
Crump, Lloyd R., to United States of America, Army. Ultra high gain two-transistor reflex amplifier. 3,398,370, 8-20-68, Cl. 325—486.
Cryodry Corp.: See—
Jeppson, Morris R., and Harper. 3,398,251.
Currie, Andrew C.: See—
Grigor, James, Parker, and Currie. 3,398,162.
Currie, Grover C., Jr., and W. J. Schieser, to The Corrugated Container Co. Machine for forming and setting up cartons from folded and collapsed fiberboard flats. 3,397,624, 8-20-68, Cl. 93—36.3.
Currin, Cedric G., and J. S. Hood, to The Dow Corning Corp. Method of making semiconductor circuits. 3,397,447, 8-20-68, Cl. 29—577.
Curry, Roger W.: See—
Hansen, Harold V., and Curry. 3,397,658.
Cyba, Henryk A., to Universal Oil Products Co. Mixed chelates of a schiff base, an amine, and a transition series metal. 3,398,170, 8-20-68, Cl. 260—439.
Dafler, Gene L.: See—
Merrick, Glenn O., Dafler, and Bodem. 3,398,306.
Daimler-Benz Aktiengesellschaft: See—
Scherenberg, Hans O. 3,397,684.
Dakin, Thomas W.: See—
Kilgore, Lee A., Spindle, Casanova, and Dakin. 3,398,348.
Dalin, David. Method of making heat exchanger having extended surface. 3,397,440, 8-20-68, Cl. 29—157.3.
Daly, Richard T.: See—
Sims, Stuart D., and Daly. 3,398,379.
D'Ambrosio, Michael A., to United Aircraft Corp. Pressure ratio transducer. 3,397,580, 8-20-68, Cl. 73—407.
Damm, Klaus, H. Steinbach, and W. Noll, to Farbenfabriken Bayer Aktiengesellschaft. Organosiloxane-polyether urethane emulsifiers. 3,398,172, 8-20-68, Cl. 260—448.2.
Daniel, William H. Convertible pump. 3,397,647, 8-20-68, Cl. 103—218.
Danielsen, Berne E.: See—
Ryan, John W., Danielsen, and De Gelder. 3,397,484.
Dannels, Bobby F.: See—
Shepard, Alvin F., and Dannels. 3,398,122.
Danuser Machine Works, Inc.: See—
Danuser, Walter W. 3,397,521.
Danuser, Walter W., to Danuser Machine Works, Inc. Rotatable double-headed lawnmower. 3,397,521, 8-20-68, Cl. 56—25.4.
Darragh, Richard T., and K. W. Nelson, to The Procter & Gamble Co. All-purpose shortening composition. 3,397,996, 8-20-68, Cl. 99—118.
Das, Balaram, and K. G. Van Senden, to Lever Bros. Co. Low temperature bleaching composition. 3,398,096, 8-20-68, Cl. 252—95.
Dasch, Benno: See—
Rothfeld, Otto, and Dasch. 3,397,514.
Dassau, Warren J.: See—
Lieber, Roy E., Vander Schraaf, and Dassau. 3,398,087.
Daunt, John G., to Research Corp. Cyclic desorption refrigerator. 3,397,549, 8-20-68, Cl. 62—79.
Daunt, John G., to Malaker Corp. Regenerator matrix systems for low temperature engines. 3,397,738, 8-20-68, Cl. 165—10.
Davant, Joseph A., Jr.: See—
McNeill, William A., and Davant. 3,397,437.
Davies, Arthur G., to Medical and Electrical Instrumentation Co., Ltd. Exposure control apparatus. 3,397,611, 8-20-68, Cl. 88—24.
Davies, David O., L. Barnes, and A. A. Burrows, to Rolls-Royce Ltd. Fuel nozzle assembly for gas turbine engines or the like. 3,397,536, 8-20-68, Cl. 60—39.71.
Davies, Peter M. J.: See—
Heard, Jeffery G., and Davies. 3,398,304.
Davis, Harvey J. Container having a plurality of pockets affixed thereto. 3,397,804, 8-20-68, Cl. 220—20.
Davis, Raymond L., II, to Leeds & Northrup Co. Apparatus for maintaining a carburizing atmosphere during heat treatment. 3,397,875, 8-20-68, Cl. 266—5.
Davis, Thomas E., to Burlington Engineering Sales Co., Inc. Self-bailing beam. 3,397,558, 8-20-68, Cl. 68—198.
Day, Thomas G., to Union Carbide Corp. Valve seals for dry solid pumps. 3,397,801, 8-20-68, Cl. 214—17.
Dayco Corp.: See—
Richmond, Kenneth D. 3,398,218.
Dearsley, George, to American Machine & Foundry Co. Cigarette packaging machinery. 3,397,922, 8-20-68, Cl. 302—2.
De Beauchamp, Robert L., and T. A. Sullivan, to United States of America, Interior. Method of producing anhydrous chromous chlorine from chromium metal. 3,397,946, 8-20-68, Cl. 23—87.
De Braal, Donald: See—
Ephraim, Max, Jr., and De Braal. 3,397,513.
Decca Ltd.: See—
Phillipson, Alan, Spiller, Smith, and Cheesman. 3,397,425.
Dechaux, Charles C. E. Turbine propulsion-gas generator for aircraft and the like. 3,397,535, 8-20-68, Cl. 60—39.5.
De Corso, Serafino M., and C. B. Wolf, to Westinghouse Electric Corp. Nonconsumable arc electrode. 3,398,229, 8-20-68, Cl. 13—18.
Deere & Co.: See—
Hansen, Harold V., and Curry. 3,397,658.
Hubbard, Arthur L. 3,397,523.
Sanderson, Leon F., Hook, and McCunn. 3,397,522.
Deery, Hugh J., to Cabot Corp. Oxidation treatment of carbon black. 3,398,009, 8-20-68, Cl. 106—307.
De Gelder, Jacob: See—
Ryan, John W., Danielsen, and De Gelder. 3,397,484.
De Haes, Louis M., and J. F. Willems, to Gevaert Photo-Producten N.V. Photographic materials producing a color change by reacting a metal salt with tetrahydroquinoline. 3,397,983, 8-20-68, Cl. 96—29.
Dehne, Clarence A.: See—
Kondur, Louis, and Dehne. 3,397,650.
Dehnert, Johannes, to Badische Anilin- & Soda-Fabrik Aktiengesellschaft. 1:2-chromium complex mixed azo dyes. 3,398,132, 8-20-68, Cl. 260—145.
Delescluse, Leon, to Societe Fives Lille-Cail. Speed reducing gear transmission. 3,397,591, 8-20-68, Cl. 74—410.
Delaigue, Serge, and R. Rauche, to International Standard Electric Corp. Simplified data-processing system. 3,398,402, 8-20-68, Cl. 340—172.5.
De Ligt, John, to West Virginia Pulp and Paper Co. Coating apparatus. 3,397,675, 8-20-68, Cl. 118—258.
De Lizasoain, Gabriel V., R. E. Martin, and H. I. Otano 17.65% to D. G. Wyman, 13.25% to R. Z. Pierpont, 4.40% to E. A. Johnston, 7.05% to L. LeMaster, 2.35% to W Rowley, and 2.35% to R. L. Townshend. Electrical conductor of fibers embedded in an insulator. 3,398,233, 8-20-68, Cl. 174—110.
Denney, Omer F., and R. D. Page, to Caterpillar Tractor Co Stabilizer for motor vehicle. 3,397,898, 8-20-68, Cl. 280—150.
De Paola, Theodore C.: See—
Petrucci, Raymond M., and De Paola. 3,397,642.
Desal Ltd.: See—
Cowley, John J. 3,398,060.
Des Rochettes, Henri: See—
Bonfils, Rene, and Des Rochettes. 3,398,081.
Dessert, Edward P., to Square D Co. Molded case circuit breaker and mounting means therefor. 3,398,249, 8-20-68, Cl. 200—168.
Detrex Chemical Industries, Inc.: See—
Jacobsen, John B., and Carpenter. 3,398,023.
Deutsche Gold- und Silber-Scheideanstalt vormals Roessler See—
Klingler, Karl H. 3,398,150.
De Vigan, Andre F. Dust and like solid particle separator 3,397,517, 8-20-68, Cl. 55—400.
De Vos, Henrik A. J., and M. G. Toth, to Sylvania Electric Products, Inc. Lighting fixture. 3,398,270, 8-20-68, Cl. 240—3.
Dieter Hanbold Industrielle: See—
Volkmann, Dieter. 3,397,828.
Dieterich, Dieter: See—
Keberle, Wolfgang, Himmelmann, Dieterich, Bayer, and Nittel. 3,397,989.
Dietz Machine Works, Inc.: See—
Leonardi, Leonard. 3,397,625.
Dill, Frederick H., Jr., to International Business Machines Corp. Transistor structure with an emitter region epitaxially grown over the base region. 3,398,335, 8-20-68, Cl. 317—235.
Dillingham, Edward: See—
Foxwell, Gerry H., and Dillingham. 3,397,486.
Dine, Rene E. Marshalling yard apparatus. 3,398,276, 8-20-68, Cl. 246—182.
Diprose, Kenneth V., to Hancock & Co., (Engineers) Ltd Line follower having asymmetrical scanning pattern and means for inverting the scanning display. 3,398,283, 8-20-68, Cl. 250—202.
Dirkse Donald J.: See—
Cleereman, Kenneth J., and Dirkse. 3,398,035.
Dobrikin, Harold L., to Berg Mfg. & Sales Co. Tractor protection valve assembly. 3,397,925, 8-20-68, Cl. 303—29.
Doerr, Robert C.: See—
Baker, Robert A., and Doerr. 3,398,101.
Doggrell, Leslie A.: See—
Tench, John R., and Doggrell. 3,397,815.
Dokos, Sophocles J.: See—
Barnas, Louis A., Jr., Dokos, and Patzer. 3,397,456.
Donald, Harold J., to The Dow Chemical Co. Apparatus for the preparation of thermoplastic resinous composite articles. 3,397,428, 8-20-68, Cl. 18—13.

Donovan, John S. Hydro-mechanical transmission. 3,397,-594, 8-20-68, Cl. 74—677.

Dooley, Jerry L., and H. R. McCarley, to United States of America, Army. Active compensation network to stabilize an inertial platform. 3,398,341, 8-20-68, Cl. 318—18.

Dopieralski, Edmund L. Score sheet for recording individual and composite scores. 3,397,886, 8-20-68, Cl. 273—54.

Dornfeld, John E. Mica disc capacitor. 3,398,338, 8-20-68, Cl. 317—258.

Dorr-Oliver Inc.: *See*—
Okey, Robert W. 3,398,088.

Dow Chemical Co.: *See*—
Cleereman, Kenneth J., and Dirkse. 3,398,035.

Dow Chemical Co., The: *See*—
Donald, Harold J. 3,397,428.
Gallant, Robert W. 3,398,204.
Steffanson, Robert S., Barnard, and Johnson. 3,398,080.
Walters, Harold A. 3,398,018.

Dow Corning Corp.: *See*—
Barnes, Garrett H., Jr. 3,398,174.
Baurain, Thomas S., and Quaal. 3,398,017.
Currin, Cedric G., and Hood. 3,397,447.
Flatt, Donald V. 3,398,179.
Haga, Leigh J., and Tucker. 3,398,033.
Haluska, Loren A. 3,398,104.
Johnson, Wendell L., and Ross. 3,398,112.
Leitheiser, Robert H. 3,398,175.
Nelson, Lee E. 3,398,178.
Plueddemann, Edwin P. 3,398,044.
Plueddemann, Edwin P., and Clark. 3,398,210.
Stewart, Howard F. 3,398,177.
Tucker, Thomas N. 3,397,448.
Youngs, Delmar C. 3,398,043.

Downes, John E., to Imperial Chemical Industries Ltd. Bipyridylium compounds and herbicidal compositions containing the same. 3,398,154, 8-20-68, Cl. 260—295.

Downey, Edward J., Jr., W. F. Bauder, and H. W. Cramm, to United States of America, Air Force. Traveling wave tube with external helical coupler positioner. 3,398,313, 8-20-68, Cl. 315—3.5.

Dracka, Oldrich: *See*—
Mackrle, Svatopluk V., Dracka, Halamek, Paseka, and Polasek. 3,398,089.

Drage, James J., to Bell Punch Co., Ltd. Electronic counter. 3,398,265, 8-20-68, Cl. 235—92.

Drager, Otto H.: *See*—
Warncke, Ernst. 3,397,693.

Drain, David J., to T. J. Smith & Nephew Ltd. Derivatives of acetic acid. 3,398,187, 8-20-68, Cl. 260—519.

Drennan, James G., to Owens-Illinois, Inc. Method of handling beverage bottles. 3,397,504, 8-20-68, Cl. 53—26.

Dryan, James J.: *See*—
Scarnato, Thomas J., Sorensen, Dryan, and Lawler. 3,397,923.

Dualjet Corp.: *See*—
Simons, Edward W. 3,397,631.

Dublirer, Robert: *See*—
Katzman, Lawrence, and Dublirer. 3,398,264.

Dubois, Jean-Pierre, to Fabrique d'Horlogerie Chs. Tissot et Fils S.A. Bearing means for arbor of a watch runner. 3,397,531, 8-20-68, Cl. 58—140.

Duff, Joseph H., and A. J. Soriente, to Union Tank Car Co., Corp. Water treating apparatus. 3,397,788, 8-20-68, Cl. 210—195.

Duhart, Pierre: *See*—
Jamey, Maurice A., Maurel, and Duhart. 3,397,951.

Duke, James B.: *See*—
Jacobs, Daniel A., and Duke. 3,398,008.

Duke, Roy B., Jr., and M. A. Perry, to Eastman Kodak Co. Dismutation of aldehydes. 3,398,166, 8-20-68, Cl. 260—413.

Duling, Irl N., and A. Schneider, to Sun Oil Co. Diesters containing adamatane nuclei. 3,398,165, 8-20-68, Cl. 260—410.

Du Pont de Nemours, E. I., and Co.: *See*—
Andrews, Alday B., and Coursen. 3,397,756.
Bergmann, Oswald R., Cowan, and Holtzman. 3,397,444.
Burke, James D., Jr., and Hawkins. 3,397,427.
Carmichael, Keith S. 3,397,465.
Goldman, Max, and Wallenfels. 3,398,016.
Howard, Edward G., Jr. 3,398,123.
Mahler, Walter. 3,398,167.
Roesky, Herbert W. 3,397,967.

Durckheimer, Walter: *See*—
Schorr, Manfred, Durckheimer, and Lammler. 3,398,146.

Durham, Robert L.: *See*—
Haskins, Gerald M., and Durham. 3,397,749.

Dushek, Charles D., to General Electric Co. Cabinet including vertically adjustable shelf supports. 3,397,934, 8-20-68, Cl. 312—351.

Dutcher, Ival G., to Whirlpool Corp. Apparatus for securing a drain conduit to a sink. 3,397,902, 8-20-68, Cl. 285—206.

Dwyer, Douglas F. G., to The Marconi Co. Ltd. Amplitude stabilized crystal oscillator. 3,398,380, 8-20-68, Cl. 331—109.

Dwyer, Peter W., and G. L. Couch, to General Electric Co. Desiccant-type air dryer employing heat for reactivation. 3,397,511, 8-20-68, Cl. 55—196.

Dykeman, George, and F. Slamar, to United States Steel Corp. Control system for vapor-deposition coating apparatus. 3,397,672, 8-20-68, Cl. 118—5.

EG & G, Inc.: *See*—
Gates, Percival T., Jr. 3,398,279.

Eastern Splash Mats Inc.: *See*—
Ferree, Roy E. 3,398,041.

Eastern Tool & Mfg. Co.: *See*—
Peterson, Carl E. 3,397,485.

Eastman Kodak Co.: *See*—
Bailey, Joseph. 3,398,145.
Caldwell, John R. 3,398,020.
Critchell, Dean J. 3,397,505.
Duke, Roy B., Jr., and Perry. 3,398,166.
Jackson, Winston J., Jr., and Caldwell. 3,398,212.
Klauss, Ralph E. 3,398,248.
Lincoln, Lewis L., and Brooker. 3,397,981.
Luckey, George W., and Illingsworth. 3,397,987.
Millikan, Allan G., and Herz. 3,397,986.
Sloan, Cephas H., and Sublett. 3,397,705.
Wallace, David J., and Weaver. 3,398,152.
Williams, Carl J., Jr. 3,397,984.

Edris, Charles R., H. D. Fraser, and M. C. Unglert, to Westinghouse Electric Corp. High pressure vapor discharge lamp having a fill including sodium iodide and a free metal. 3,398,312, 8-20-68, Cl. 313—225.

Edstrom, Nils H., to Telefonaktiebolaget L M Ericsson. Circuit arrangement for supervising the terminal equipment belonging to a junction line extending between two telephone exchanges. 3,398,243, 8-20-68, Cl. 179—18.

Edwards High Vacuum International Ltd.: *See*—
Martinis Marchi Jellicich, Maria S. 3,397,462.

Egge, William. Citrus fruit peeler. 3,397,455, 8-20-68, Cl. 30—24.

Eguchi, Tamotsu, and T. Okaya, to Kurashiki Rayon Co., Ltd. Method of manufacturing improved polyoxymethylene graft copolymers using radiation. 3,398,074, 8-20-68, Cl. 204—159.15.

Ehrentraut, Heinz: *See*—
Klemm, Rudolf, Wagner, Ehrentraut, Hempel, and Schumann. 3,398,039.

Ehrhardt, Joachim, E. Hultzsch, B. Meier, and F. Söldner, to VEB Jena, Carl Zeiss. Gearwheel testing recorder. 3,397,459, 8-20-68, Cl. 33—179.5.

Eike, Eugene F.: *See*—
Allman, Jack C., and Eike. 3,397,661.

Einerson, Amos M., and H. W. Pruner, to Barnes Mfg. Co. Pump. 3,397,644, 8-20-68, Cl. 103—103.

Eisai Co., Ltd.: *See*—
Tohda, Minoru, Kuwana, and Kawabe. 3,398,147.

Eisenburger, Kuno. Cylindrical processing container. 3,397,-709, 8-20-68, Cl. 134—132.

Elsert, Lyle H. and W. C. Roll out-roll in dock. 3,397,546, 8-20-68, Cl. 61—48.

Elsert, Walter C.: *See*—
Elsert, Lyle H. and W. C. 3,397,546.

Ek, Stig Y.: *See*—
Jacobson, David E., and Ek. 3,397,636.

Elam, William B., and S. F. Jensen, to American Can Co. Container manufacturing machine. 3,398,037, 8-20-68, Cl. 156—428.

Electrical Fittings Corp.: *See*—
Gohs, Howard C. 3,397,726.

Electro-Trace Corp.: *See*—
Kahn, Walter C. 3,398,262.

Electrovert, Inc.: *See*—
Pearl, Curtis F. 3,397,430.

Elenbogen, Gilbert D., and M. Baron, to Vitamins, Inc. Imitation cream cheese spread containing polyunsaturated fat. 3,397,994, 8-20-68, Cl. 99—116.

Elenbogen, Gilbert D., to Vitamins, Inc. Edible dietary spread and method of making same. 3,397,995, 8-20-68, Cl. 99—116.

Elliot, Alfred G.: *See*—
Lavendel, Henry W., Bruce, Clauss, Elliot, and Kuczynski. 3,397,968.

Elmer, William B. Isoradiant energy reflecting. 3,398,272, 8-20-68, Cl. 240—41.35.

Ellerbrock, Donald H. Composite can with easy opening scored can opener end. 3,397,809, 8-20-68, Cl. 220—48.

Ellis, Charles R., to Keuffel & Esser Co. Displacement sensing device. 3,397,608, 8-20-68, Cl. 88—14.

Elting, Thomas H. Means for displaying golf clubs. 3,397,795, 8-20-68, Cl. 211—60.

Ely, William E.: *See*—
Robins, David W., and Ely. 3,397,760.

Embree, Peter, to Texas Instruments Inc. Diversity seismic record stacking method and system. 3,398,396, 8-20-68, Cl. 340—15.5.

Embart Corp.: *See*—
Lyle, Aaron K., and Kulig. 3,397,609.
Blumenfeld, John F. 3,398,228.

Engle, Theodore M., to Hydrocarbon Research, Inc. Catalyst addition and withdrawal process. 3,398,085, 8-20-68, Cl. 208—157.

Engelhard Hanovia, Inc.: *See*—
Highberg, Carle W. 3,397,493.

Engelhard Minerals & Chemicals Corp.: *See*—
Jacobs, Daniel A., and Duke. 3,398,008.

Engineering Technology, Inc.: *See*—
Anderson, John C. 3,397,850.

English Electric Co. Ltd., The: *See*—
Heard, Jeffery G., and Davies. 3,398,304.

Ephraim, Max, Jr., and D. De Braal, to General Motors Corp. Oil bath air filter flow control. 3,397,513, 8-20-68, Cl. 55—225.

Erb, Ezra, to Union Carbide Corp. Avoidance of explosion hazards in air fractionation by halogenated hydrocarbon addition. 3,397,547, 8-20-68, Cl. 62—20.

Ergenc, Sahabettin, to Sulzer Bros. Ltd. Method for supplying a gaseous product to meet a variable demand. 3,397,548, 8-20-68, Cl. 62—52.

Erie Development Co.: *See*—
Whaley, Henry P., and Hovland. 3,397,844.

Ertl, Edward S., and L. A. Hannula, to Acoustics Development Corp. Coin telephone mounting assembly. 3,398,244, 8-20-68, Cl. 179—189.

Ess, Richard J., and D. E. Floyd, to General Mills, Inc. Can having seams adhesively bonded by the reaction product of alkylene diamine, alkanol amine, dicarboxylic acid, and polymeric fat acid. 3,397,816, 8-20-68, Cl. 220—81.

Essex Wire Corp.: *See*—
Harnau, Hans-Dieter, and Backstein. 3,398,302.

Esso Research and Engineering Co.: *See*—
Clayton, Robert E., and Vanderbilt. 3,398,045.
Griesbaum, Karl, and Oswald. 3,398,200.
Lieber, Roy E., Vander Schraaf, and Dassau. 3,398,087.
Pfrehm, Raymond H. 3,397,570.
Rowe, Charles A., Jr., Muessig, and Yuhas. 3,398,107.
Spenadel, Lawrence, Hall, and Kirshenbau. 3,398,215.
Strickland, Barney R. 3,397,970.

Estep, Mickey L., and K. G. Kaufman. Holding tool for starting sparkplugs. 3,397,602, 8-20-68, Cl. 81—125.

Ethyl Corp.: *See*—
Giraitis, Albert P., Kobetz, and Beaird. 3,398,171.

Evans, Henry E., to N. V. Appleton (U.K.), Ltd. Channel member fixings. 3,397,904, 8-20-68, Cl. 287—189.36.

Evans, Paul, Jr., and F. D. Kaiser, to Westinghouse Electric Corp. Encased high voltage electrical converter of the semiconductor type. 3,398,349, 8-20-68, Cl. 321—5.

Every, Richard L.: *See*—
Crownover, Carl F., and Every. 3,398,077.

Every, Richard L., and R. L. Grimsley, to Continental Oil Co. Method for preparation of wettable sulfur. 3,398,227, 8-20-68, Cl. 424—162.

FMC Corp.: *See*—
Mednick, Sol A. 3,398,125.
Schwartz, Nelson N. 3,398,186.

Fabbri, Giuseppe: *See*—
Zannini, Enzo, Piacenza, and Fabbri. 3,398,057.

Fabrique d'Horlogerie Chs. Tissot et Fils S.A.: *See*—
Dubois, Jean-Pierre. 3,397,531.

Fairchild Camera and Instrument Corp.: *See*—
Bittmann, Charles A., and Sah. 3,397,450.

Fall River Exploration and Mining Co., The: *See*—
Valle, Thomas. 3,397,876.

Fanner Mfg. Co., The: *See*—
Schlein, Seymour N. 3,397,857.

Fansteel Metallurgical Corp.: *See*—
Regester, Richard F. 3,397,979.

Farbenfabriken Bayer Aktiengesellschaft: *See*—
Damm, Klaus, Steinbach, and Noll. 3,398,172.
Frohberger, Paul-Ernst, Klauke, and Kuhle. 3,398,190.
Suling, Carlhans, and Schnalke. 3,398,127.
Tarnow, Horst, Holtschmidt, and Unterstenhofer. 3,398,-192.
Wagner, Kuno. 3,397,963.

Farbwerke Hoechst Aktiengesellschaft vormals Meister Lucius & Bruning: *See*—
Kuhlkamp, Alfred, and Nowack. 3,398,103.
Schorr, Manfred, Durckheimer, and Lammler. 3,398,146.

Farquhar, Melville T., to Reynolds Metal Co. Display carton for a bottle-like container and blanks for making same. 3,397,772, 8-20-68, Cl. 206—45.14.

Fastron Co., The: *See*—
Cochrum, William A. 3,398,393.

Fathauer, George H., to Radson Engineering Corp. Electronic timer. 3,398,295, 8-20-68, Cl. 307—141.4.

Fathauer, George H., to Radson Engineering Corp. Electronic level control. 3,397,715, 8-20-68, Cl. 137—387.

Faulds, John H.: *See*—
Mastriforte, Otil F., and Faulds. 3,397,894.

Febco, Inc.: *See*—
Barnett, John S. 3,397,859.

Feder, Jack B.: *See*—
Russell, Joseph L., and Feder. 3,397,954.

Federal Pacific Electric Co.: *See*—
Ferris, Frank H. 3,398,327.

Fein, Rolf A. Detachable decorative seat belt cover. 3,397,913, 8-20-68, Cl. 297—385.

Felicetta, Vincent F., and A. E. Markham, to Georgia-Pacific Corp. Cement composition and products thereof. 3,398,005, 8-20-68, Cl. 106—90.

Felicetta, Vincent F., and A. E. Markham, to Georgia-Pacific Corp. Cement composition and products thereof. 3,398,006, 8-20-68, Cl. 106—90.

Ferguson, Robert M.: *See*—
Martel, Robert W., and Ferguson. 3,398,336.

Ferland, Jean-Marie: *See*—
Lefebvre, Yvon, and Ferland. 3,398,138.

Ferney, Francis X., to Bird Machine Co. Process for separating solids from liquid suspensions thereof. 3,398,093, 8-20-68, Cl. 210—54.

Ferree, Roy E., to Eastern Splash Mats Inc. Wrapper material. 3,398,041, 8-20-68, Cl. 161—113.

Ferris, Frank H., to Federal Pacific Electric Co. Laminated bus structure and terminal assembly. 3,398,327, 8-20-68, Cl. 317—103.

Field, George F., and L. H. Sternbach, to Hoffmann-La Roche Inc. Process for preparing 2-aminobenzodiazepines. 3,398,-139, 8-20-68, Cl. 260—239.

Fields, Joseph E., and J. H. Johnson, to Monsanto Co. Water purification process. 3,398,092, 8-20-68, Cl. 210—24.

Finkelston, Raymond, Jr.: *See*—
Hartman, Maurice D., Jr., and Finkelston. 3,397,671.

Fiore, Michael R.: *See*—
Hunt, John E., and Fiore. 3,397,487.

Fischer & Porter Co.: *See*—
Brewer, Nathaniel. 3,398,305.
Ham, Donald L. 3,397,575.

Fischer, Artur, and G. Porlein; said Porlein assor. to said Fischer. Flash unit. 3,398,389, 8-20-68, Cl. 339—65.

Flajole, William J. Camping trailer. 3,397,908, 8-20-68, Cl. 296—23.

Flatt, Donald V., to Dow Corning Corp. Method for the preparation of diphenylsilanediol. 3,398,179, 8-20-68, Cl. 260—448.2.

Flex-O-Lators, Inc.: *See*—
Richardson, William F. 3,397,914.

Floyd, Don E.: *See*—
Ess, Richard J., and Floyd. 3,397,816.

Fluid Regulators Corp.: *See*—
Tenkku, Wayland A., and Hribar. 3,397,717.

Fogle, Robert C., to American Machine & Foundry Co. Container. 3,397,771, 8-20-68, Cl. 206—45.11.

Fogt, Thomas H., and M. N. Scherzinger, to General Motors Corp. Clothes dryer with plural function controller operated by single control dial. 3,397,461, 8-20-68, Cl. 34—45.

Foley, William R., Jr., to The McKay Co. Welding method and electrode. 3,398,256, 8-20-68, Cl. 219—145.

Ford, Douglas L., and W. W. Kennard, to Union Carbide Corp. Radiation sensitive evaporative analyzer. 3,398,-286, 8-20-68, Cl. 250—218.

Ford Motor Co.: *See*—
Knowles, James. 3,397,534.

Fordath Engineering Co. Ltd.: *See*—
Parkes, Eric, and Lawrence. 3,398,012.

Forgue, Stanley V.: *See*—
Morton, George A., Pressely, and Forgue. 3,398,316.

Forrer, Homer W. Method of making an article carrier. 3,397,-623, 8-20-68, Cl. 93—36.

Foulleteier, Louis, to Ugine Kuhlmann. Process for treating a mixture of symmetric and asymmetric dichlorotetrafluoroethanes. 3,398,202, 8-20-68, Cl. 260—653.

Fowler, John L., and F. R. Sherliker, to Imperial Chemical Industries Ltd. Chlorinated polyethylene adhesive compoisitions for bonding paper to nonporous surfaces. 3,398,-046, 8-20-68, Cl. 161—218.

Foxwell, Gerry H., and E. Dillingham, to Advance Data Systems Corp. Turnstile. 3,397,486, 8-20-68, Cl. 49—47.

Frandsen, Walter N., to Universal Oil Products Co. Weighted spray nozzle. 3,397,842, 8-20-68, Cl. 239—206.

Fraser, Hugh D.: *See*—
Edris, Charles R., Fraser, and Unglert. 3,398,312.

Fraser, William J., to United States of America, Army. Process for making fluorinated nitrosoalkanes. 3,398,072, 8-20-68, Cl. 204—158.

Frayne, John G., and H. P. Brueggemann, to The Marquardt Corp. Standing wave ultrasonic light cell modulator. 3,397,936, 8-20-68, Cl. 350—161.

Freyhold, Helmut V.: *See*—
Schnurch, Roland, Koster, and Freyhold. 3,397,950.

Fricks Foods, Inc.: *See*—
Fricks, William E. 3,397,998.

Fricks, William E., to Fricks Foods, Inc. Method for producing pourable refrigerated margarine. 3,397,998, 8-20-68, Cl. 99—123.

Friedrich Deckel Prazisions Mechanik and Maschinenbau: *See*—
Muller, Johann. 3,397,592.
Muller, Johann. 3,397,616.

Fritz, Robert J., to General Electric Co. Liquid feed distributor. 3,397,730, 8-20-68, Cl. 159—13.

Frohberger, Paul-Ernst, E. Klauke, and E. Kuhle, to Farbenfabriken Bayer Aktiengesellschaft. Fluoro-dichloro-methanesulfenic acid-N-(trifluormethyl)-N-anilide. 3,398,190, 8-20-68, Cl. 260—551.

Fry, Douglas J., and P. J. Keogh, to Ilford Ltd. Pentaazaindene compounds useful as stabilizers against fog for silver halide photographic materials. 3,398,148, 8-20-68, Cl. 260—249.5.

Fryer, Rodney I.: *See*—
Brust, Bernard, Fryer, and Sternbach. 3,398,156.

Fuchs, Francis J., Jr., to Western Electric Co., Inc. Method and apparatus for the extrusion of metal tubes and billets by an initial impulsive force and the subsequent application of uniform extrusion force. 3,397,562, 8-20-68, Cl. 72—54.

Fujita, Yoshimasa, K. Kuratani, and K. Zoda, to Japan Exlan Co. Ltd. Apparatus for producing bulky yarn and its fabrics. 3,397,426, 8-20-68, Cl. 18—8.

Fujitsu Limited: *See*—
Yasufuku, Matami, Kawamura, and Hayashi. 3,398,029.

Fusco, Raffaello, and M. Bianchi, to Warner-Lambert Pharmaceutical Co. 1-Phenyl-4-alkylamino-pyrazoles. 3,398,158, 8-20-68, Cl. 260—310.

GAF Corp.: *See*—
Catino, Sigmund C., and Strobel. 3,398,143.
Glickman, Samuel A. 3,398,201.
Hort, Eugene V., and Bergman. 3,397,744.
Pratt, James L., Jr. 3,397,630.

G.K.N. Somerset Wire Ltd.: *See*—
McFarlane, James. 3,398,258.

Gal, George: *See*—
Chemerda, John M., Gal, and Sletzinger. 3,398,157.

Gallagher, John P. Ventilated trousers. 3,397,407, 8-20-68, Cl. 2—227.

Gallant, Robert W., to The Dow Chemical Co. Isomerization process. 3,398,204, 8-20-68, Cl. 260—654.

Galle, Edward M. Seal means for drill bit bearings. 3,397,-928, 8-20-68, Cl. 308—8.2.

Galvin, Thomas J., and F. A. Hughes, to Atlas Chemical Industries, Inc. Flocculating agent. 3,397,953, 8-20-68, Cl. 23—143.

Ganung, Robert B., and L. H. Huber, to National Can Corp. Plastic nozzle metal end closure assembly method. 3,397,-824, 8-20-68, Cl. 222—570.

Garty, Kenneth T., and T. B. Gibb, Jr., to Union Carbide Corp. Polymerization of oxirane monoepoxides using an organometallic compound with a phenol as cocatalysts. 3,398,-119, 8-20-68, Cl. 260—47.

Gassino, Teresio, and B. Azzalin, to Olivetti, Ing C. & C. S.p.A. Printing calculating machine having a transversely moable register. 3,397,837, 8-20-68, Cl. 235—60.24.

Gates, Percival T., Jr., to EG & G, Inc. Radiometer having a wide range of spectral response. 3,398,279, 8-20-68, Cl. 250—83.3.
Gawron, Stanley A.: *See*—
Granzow, Daniel B., Gawron, Graff, and Swain. 3,397,-628.
Geacintov, Cyril, L. Starr, and W. J. Toth, to Mobil Oil Corp. Photochemical reaction process using a halosilane-coated vessel. 3,398,073, 8-20-68, Cl. 204—159.13.
Geigy, J. R., A. G.: *See*—
Inman, Eric R., Smith, and Macpherson. 3,398,153.
Gemeinhardt, Hermann: *See*—
Schatz, Gunther, Gemeinhardt, Brucher, and Jurisch. 3,398,223.
Generaay-Generale Radiologica S.p.A.: *See*—
Rossi, Guido. 3,397,411.
General Dynamics Corp.: *See*—
Zavitz, Arnold L., and Vanderveer. 3,397,429.
General Electric Co.: *See*—
Crowe, William P., and Murphy. 3,397,553.
Dushek, Charles D. 3,397,934.
Dwyer, Peter W., and Couch. 3,397,511.
Fritz, Robert J. 3,397,730.
Goossens, John C. 3,398,173.
Haskins, Gerald M., and Durham. 3,397,749.
King, Ralph E., and Horvay. 3,397,551.
Long, Glen F. 3,398,390.
McClintic, Bruce F., and Hughes. 3,397,759.
Rex, Charles H., and Brom. 3,398,273.
Rex, Charles H. 3,398,274.
Siebold, Donald J. 3,398,238.
Zerfoss, Robert W. 3,398,291.
Ziemba, Richard T., and Wolf. 3,397,640.
General Mills, Inc.: *See*—
Ess, Richard J., and Floyd. 3,397,816.
Rogler, Edgar R. 3,398,164.
General Motors Corp.: *See*—
Badger, William C., and Mason. 3,397,836.
Baldwin, Ralph E. 3,397,569.
Braden, Ralph S. 3,397,708.
Brock, Eugene W. 3,398,399.
Ephraim, Max, Jr., and De Braal. 3,397,513.
Fogt, Thomas H., and Scherzinger. 3,397,461.
Groves, Ronald C. 3,397,621.
Jones, Myrton N. 3,397,808.
Merrick, Glenn O., Dafler, and Bodem. 3,398,306.
Rogers, Kenneth A. 3,397,518.
Ruff, Donald O. 3,398,350.
Schultze, Harold E. 3,397,897.
Steiner, John C., and Wolgemuth. 3,397,533.
General Plastics Corp.: *See*—
Sullivan, David J., and Goldsmith. 3,397,856.
General Signal Corp., The: *See*—
Sibley, Henry C., and Pettitt. 3,398,401.
Genin, Robert I., and J. Wapner, to Amram et Fils S.A.R.L. Audio-visual autodidactic device. 3,397,467, 8-20-68, Cl. 35—35.
Geoghegan, Eamonn D. A., to Sprague Electric Co. High-voltage electrical capacitor. 3,398,340, 8-20-68, Cl. 317—260.
Georgia-Pacific Corp.: *See*—
Felicetta, Vincent F., and Markham. 3,398,005.
Felicetta, Vincent F., and Markham. 3,398,006.
Gerick, Edwin N., to Motorola, Inc. Spin actuated apparatus. 3,397,641, 8-20-68, Cl. 102—79.
Germino, Felix J.: *See*—
Buckler, Sheldon A., and Germino. 3,398,015.
Gerst, Franz. Safety device for wire run-off machines. 3,397,-559, 8-20-68, Cl. 72—5.
Gesellschaft fur Multiblitzgerate, Dr. Ing. D. A. Mannesmann m.b.H.: *See*—
Ludloff, Wolfgang. 3,397,612.
Gevaert Photo-Producten N.V.: *See*—
De Haes, Louis M., and Willems. 3,397,983.
Van Paesschen, August J., and Vrancken. 3,397,988.
Gewerkschaft Eisenhutte Westfalia: *See*—
Golla, Franz, Watermann, and Weirich. 3,397,544.
Spies, Klaus, and Weirich. 3,397,543.
Ghiselli, William A., Jr.: *See*—
Bruning, John V., Patzke, Ghiselli, and Tregay. 3,397,627.
Giangarra, Leo A.: *See*—
Wu, William I. L., and Giangarra. 3,398,372.
Gibb, Alexander R. M., to Imperial Chemical Industries Ltd. Polymerizable esters from unsaturated carboxylic acid anhydrides and cyclic acetals. 3,398,184, 8-20-68, Cl. 260—486.
Gibb, Thomas B., Jr.: *See*—
Garty, Kenneth T., and Gibb. 3,398,119.
Gill, Merrion D., and E. G. Bezgela, to Westinghouse Electric Corp. Removable bearings. 3,397,929, 8-20-68, Cl. 308—10.
Giolito, Silvio L., to Stauffer Chemical Co. Phenolic and thiodiester-stabilized polyalpha-olefins. 3,398,116, 8-20-68, Cl. 260—45.85.
Giraitis, Albert P., P. Kobetz, and F. M. Beaird, Jr., to Ethyl Corp. Process of producing organohalosilanes. 3,398,171, 8-20-68, Cl. 260—448.2.
Girard-Perregaux et Cie, S.A.: *See*—
Besson, Francis, and Krebs. 3,397,530.
Gitis, Semen S., and A. V. Ivanov. Process for manufacture of 2,4-dinitrobenzene derivatives. 3,398,194, 8-20-68, Cl. 260—577.
Gittens, Stanley M. Anchor holder. 3,397,666, 8-20-68, Cl. 114—210.
Gitzen, Walter H.: *See*—
MacZura, George, and Gitzen. 3,397,952.
Giwosky, Harry L., to Controls Co. of America. Defrost control means responsive to speed of evaporator blower. 3,397,-550, 8-20-68, Cl. 62—140.
Glang, Reinhard, and A. E. Lessor, Jr., to International Business Machines Corp. Method of making cermet resistors by etching. 3,398,032, 8-20-68, Cl. 156—5.
Glanzstoff A.G.: *See*—
Rupp, Hans-Dieter, Siggel, Meyer, and Magerlein. 3,397,-960.
Schatz, Gunther, Gemeinhardt, Brucher, and Jurisch. 3,398,223.
Taul, Horst. 3,398,061.
Glass, John P. Foamed plastic container with hinged closure. 3,397,806, 8-20-68, Cl. 220—32.
Gleisner, Henry H.: *See*—
Celli, Aldo. 3,397,416.
Glickman, Samuel A., to GAF Corp. Reaction products from 2-alkoxybutanols and 3,5-x-polyalkoxyalkanols with alkylene oxides. 3,398,201, 8-20-68, Cl. 260—615.
Glidden Co., The: *See*—
Kirkpatrick, Wylie C. 3,397,823.
Globe-Union, Inc.: *See*—
Noddin, Ray C., Brayley, and Swift. 3,398,353.
Godshalk, Henry W., and R. A. Willis, Jr., to Chemetron Corp. Thermosetting resin pigment composition and process therefor. 3,398,113, 8-20-68, Cl. 260—41.
Gohs, Howard C., to Electrical Fittings Corp. Threaded lock washer and method for fabrication thereof. 3,397,726, 8-20-68, Cl. 151—37.
Goldberg, Moses W., H. H. Lehr, and M. Muller, to Hoffmann-La Roche Inc. O-(2-propynyl)-hydroxamic acids. 3,398,180, 8-20-68, Cl. 260—453.
Goldman, Max, and M. Wallenfels, to E. I. du Pont de Nemours and Co. Coating and drying thermally sensitive thermoplastic film. 3,398,016, 8-20-68, Cl. 117—119.6.
Goldsmith, Cecil J. Protector for lift seal of automobile hoist. 3,397,421, 8-20-68, Cl. 15—210.
Goldsmith, Robert: *See*—
Sullivan, David J., and Goldsmith. 3,397,856.
Goldstein, Richard, to Chamberlin Mfg. Corp. Cable tensioning apparatus for movable door controller. 8-20-68, Cl. 49—199.
Golla, Franz, W. Watermann, and W. Weirich, to Gewerkschaft Eisenhutte Westfalia. Mine roof support. 3,397,544, 8-20-68, Cl. 61—45.
Gomco Surgical Mfg. Corp.: *See*—
Henderson, Stanford A. 3,397,648.
Goodrich, B. F., Co., The: *See*—
Robins, David W., and Ely. 3,397,760.
Schneider, Wolfgang. 3,398,209.
Goodwin, John K. Single faraday cell polarimeter. 3,397,607, 8-20-68, Cl. 88—14.
Goodwin, Loyd R.: *See*—
Porter, Charles R. 3,397,758.
Goodwin, Ralph C., to Bemis Co., Inc. Bags. 3,397,622, 8-20-68, Cl. 93—35.
Goossens, John C., to General Electric Co. Process for producing siloxanes. 3,398,173, 8-20-68, Cl. 260—448.2.
Gorman, Thomas R.: *See*—
Hofer, Walter D. 3,397,524.
Gosselin, Norman R., to Iota-Cam Corp. Dental drill. 3,397,-457, 8-20-68, Cl. 32—27.
Gossman, Jesse E. Camper unit structure. 3,397,909, 8-20-68, Cl. 296—23.
Gott, Hans: *See*—
Ritter, Josef, and Gott. 3,397,565.
Gottfried, Max, to Jobst Institute, Inc. Pneumatic head and neck immobilizer. 3,397,688, 8-20-68, Cl. 128—76.
Gottlieb, Melvin H., to Bell Telephone Laboratories, Inc. Nickel-cadmium battery electrodes. 3,398,025, 8-20-68, Cl. 136—120.
Gould, Bert B., to MB Associates. Rocket launcher. 3,397,638, 8-20-68, Cl. 102—49.4.
Grace, W. R., & Co.: *See*—
Harrison, John W., and Lowry. 3,397,773.
Graff, William P.: *See*—
Granzow, Daniel B., Gawron, Graff, and Swain. 3,397,-628.
Grant, Cuthbert: *See*—
Ortiz, Ralph G., and Grant. 3,398,263.
Granzow, Daniel B., S. A. Gawron, W. P. Graff, and P. A. Swain, to Addressograph-Multigraph Corp. Graphic recorder. 3,397,628, 8-20-68, Cl. 95—1.7.
Gravis, Charles K., III, H. E. Wood, and G. F. Seipp, to Maloney-Crawford Tank Corp. Method and apparatus for reconcentrating liquid desiccant. 3,397,731, 8-20-68, Cl. 159—16.
Gray, George W.: *See*—
Hatke, Fred L., and Gray. 3,398,275.
Greatorex, John L., to Ionics, Inc. Membrane separation apparatus and process. 3,398,091, 8-20-68, Cl. 210—23.
Green, Charles W., Jr., to United Aircraft Corp. Rocket injector head. 3,397,537, 8-20-68, Cl. 60—39.74.
Green, Martin: *See*—
Rosen, Leonard B., and Green. 3,397,769.
Greene, John P., and W. L. Stewart, to H & G Industries, Inc. Handle construction. 3,397,926, 8-20-68, Cl. 306—30.
Greer, Harold M. Combination waste disposal and step stool device. 3,397,757, 8-20-68, Cl. 182—33.5.
Gregor, Harry P., to International Minerals & Chemical Corp. Recovery of glutamic acid values by electrodialysis. 3,398,-078, 8-20-68, Cl. 204—180.
Gricol, Joseph D., to Concast Inc. Method for removal of gas from molten metal during continuous casting. 3,397,-733, 8-20-68, Cl. 164—71.
Gridley, Porter F.: *See*—
Hardy, John F., and Gridley. 3,398,109.
Griesbaum, Karl, and A. A. Oswald, to Esso Research and Engineering Co. Preparation of thiol-allene adducts. 3,398,-200, 8-20-68, Cl. 260—609.
Griffith, Edward J., to Monsanto Co. Sodium tripolyphosphate. 3,397,949, 8-20-68, Cl. 23—106.

Grigor, James, J. B. Parker, and A. C. Currie, to United States of America, Navy. 2,5-(and 2,6)-dimethyl-2,3,5,6-tetrakis(difluoramino)-p-dioxanes and their method of preparation. 3,398,162, 8-20-68, Cl. 260—340.6.
Grill, John: *See*—
Maust, Frederick. 3,398,022.
Grimsley, Ralph L.: *See*—
Every, Richard L., and Grimsley. 3,398,227.
Griswold, James L. Strand measuring and cutting apparatus. 3,397,603, 8-20-68, Cl. 83—42.
Groebke, Wolfgang, and C. Mueller, to Sandoz Ltd. (also known as Sandoz A.G.). Benzophenone monazo dyes. 3,398,-136, 8-20-68, Cl. 260—207.
Groschwitz, Eberhard, to Siemens Aktiengesellschaft. Solid state stimulated raman effect amplifying system. 3,398,294, 8-20-68, Cl. 307—88.3.
Groves, Ronald C., to General Motors Corp. Vacuum modulator. 3,397,621, 8-20-68, Cl. 92—48.
Grünwald, Erich, to Siemens Aktiengesellschaft. Magnet structure with an air gap of variable width. 3,398,385, 8-20-68, Cl. 335—210.
Guenther, Arthur H., to United States of America, Air Force. High voltage switch. 3,398,322, 8-20-68, Cl. 315—150.
Guenthner, Richard A., and J. D. Lazerte, to Minnesota Mining and Mfg. Co. Fluorocarobn urethane compounds. 3,398,-182, 8-20-68, Cl. 260—455.
Guernsey, Edwin O., and W. E. Smith, to Mobil Oil Corp. Method of making telomers by means of nuclear radiation. 3,398,075, 8-20-68, Cl. 204—162.
Guin, Joel B. Reversing blade rotary engine. 3,397,680, 8-20-68, Cl. 123—11.
Gulf General Atomic, Inc.: *See*—
Newby, Glen A., and Navoy. 3,397,790.
Gullick Ltd.: *See*—
Small, Fred, and Ward. 3,397,915.
Gunderson, Cleve A.: *See*—
Batzer, Thomas H., Gunderson, and Murphy. 3,397,862.
Gunter, Addison Y., to Hudson Engineering Corp. Plate fin tube heat exchanger. 3,397,741, 8-20-68, Cl. 165—152.
Gunther, Hilmar: *See*—
Schmidt, Werner, and Gunther. 3,397,910.
Gwyn, Childress B., Jr., to Talon, Inc. Method of forming composite electrical contacts. 3,397,453, 8-20-68, Cl. 29—630.
Gwyn, Childress B., Jr., to Talon, Inc. Method and apparatus for forming composite electrical contacts. 3,397,454, 8-20-68, Cl. 29—630.
H & G, Industries, Inc.: *See*—
Greene, John P., and Stewart. 3,397,926.
Haddadin, Makhluf J., and C. H. Issidorides, to Research Corp. Quinoxaline-di-N-oxides. 3,398,141, 8-20-68, Cl. 260—239.5.
Haga, Leigh J., and T. N. Tucker, to Dow Corning Corp. Method of etching silicon carbide. 3,398,033, 8-20-68, Cl. 156—17.
Hahn, Erwin: *See*—
Ball, Werner, and Hahn. 3,398,134.
Haimson, Jacob, to Varian Associates. Apparatus and method for selectively producing high current of high energy beams of accelerated charged particles. 3,398,375, 8-20-68, Cl. 328—233.
Halamek, Ferdinand: *See*—
Mackrle, Svatopluk, and V., Dracka, Halamek, Paseka, and Polasek. 3,398,089.
Halcon International, Inc.: *See*—
Russell, Joseph L., and Feder. 3,397,954.
Hall, Homer J.: *See*—
Spenadel, Lawrence, Hall, and Kirshenbau. 3,398,215.
Hall, Richard T., to International Processes Ltd. Heat exchange system for calciner. 3,397,460, 8-20-68, Cl. 34—20.
Haluska, Loren A., to Dow Corning Corp. Polyurethane foam preparation using siloxane glycol branch copolymers. 3,398,-104, 8-20-68, Cl. 260—2.5.
Ham, Donald L., to Fischer & Porter Co. Magnetic flowmeter. 3,397,575, 8-20-68, Cl. 73—194.
Hanau, Heinz, to Industrial Tectonics, Inc. Textile guide roll. 3,397,439, 8-20-68, Cl. 29—116.
Hancock & Co. (Engineers) Ltd.: *See*—
Diprose, Kenneth V. 3,398,283.
Redman, Derek, H. 3,398,342.
Hand, James D. Fishhooks. 3,397,477, 8-20-68, Cl. 43—15.
Hanlon, Donald V., and H. E. Beasley, to Container Corp. of America. Rupturable container. 3,397,834, 8-20-68, Cl. 299—51.
Hannula, Leslie, A.: *See*—
Ertl, Edward S., and Hannula. 3,398,244.
Hansen, Harold V., and R. W. Curry, to Deere & Co. Tool bar carrier for unit planters. 3,397,658, 8-20-68, Cl. 111—36.
Hansen, Melvin O. Inertia and kinetic energy controlled seat belt retracting and locking mechanism. 3,397,849, 8-20-68, Cl. 242—107.4.
Hanson, Lloyd A., to United States of America, Atomic Energy Commission. Preparation of pure dense hypostoichiometric uranium carbide. 3,398,098, 8-20-68, Cl. 252—301.1.
Hanson, Raymond A. Excavator. 3,397,470, 8-20-68, Cl. 37—108.
Hanssen, Wilhelm J.: *See*—
Bokhoven, Cornelis, and Hanssen. 3,398,358.
Hanzalek, Frederick J., and R. A. Kane, to Combustion Engineering, Inc. Through-flow steam generator circuit. 3,397,-679, 8-20-68, Cl. 122—406.
Hanway, John E., Jr.: *See*—
Smithson, George R., and Hanway. 3,397,957.
Hardman & Holden Ltd.: *See*—
Turner, John H. W. 3,398,108.
Hardy, John F., and P. F. Gridley, to Cabot Corp. Black enamels. 3,398,109, 8-20-68, Cl. 260—29.4.
Harlow, Edward S., and W. B. Wartman, Jr., to The American Tobacco Co. Flavor enhanced cigarettes and cigars. 3,397,-700, 8-20-68, Cl. 131—9.
Harnau, Hans-Dieter, and G. Backstein, to Essex Wire Corp. Electrical impulse generator. 3,398,302, 8-20-68, Cl. 310—14.
Harnischfeger Corp.: *See*—
Aldenhoff, Bernard J. 3,398,255.
Harnish, James R., to Westinghouse Electric Corp. Refrigeration systems. 3,397,552, 8-20-68, Cl. 62—202.
Harper, John C.: *See*—
Jeppson, Morris R., and Harper. 3,398,251.
Harris, Robert. Heat sealing device. 3,397,633, 8-20-68, Cl. 100—93.
Harrison, John W., and R. D. Lowry, to W. R. Grace & Co. Special package. 3,397,773, 8-20-68, Cl. 206—45.33.
Harrower, Harold W.: *See*—
Creager, Paul, Jr., Blanford, and Harrower. 3,397,692.
Hart, Raymond: *See*—
Catlaw, Ronald, Shaw, and Hart. 3,397,865.
Härtel, Volker. Method for the continuous measurement of plasticity of rubber mixtures in a mixing mill. 3,397,571, 8-20-68, Cl. 73—54.
Hartman, Maurice D., Jr., and R. Finkelston, Jr., to Sparks Corp. Reminder-dispenser device. 3,397,671, 8-20-68, Cl. 116—121.
Hartsock, Robert E., to United-Carr, Inc. Printed circuit switch. 3,398,245, 8-20-68, Cl. 200—11.
Harvey, Mahlon A., and L. E. Helwig, to United States Steel Corp. Masking composition for galvanized metal. 3,398,010, 8-20-68, Cl. 117—5.5.
Harvey, Philip C., to National Research Corp. Thermocouple gauge control. 3,397,579, 8-20-68, Cl. 73—399.
Haskins, Gerald M., and R. L. Durham, to General Electric Co. Tool support arrangement. 3,397,749, 8-20-68, Cl. 173—163.
Haskin, Lawrence H., Jr., and G. W. Kesler, to The Inta-Roto Machine Co., Inc. Web reeling and tensioning apparatus. 3,397,848, 8-20-68, Cl. 242—56.2.
Hasler A.-G.: *See*—
Spalinger, Hans, and Reber. 3,397,766.
Hasselberg, Inc.: *See*—
Hasselberg, William J. 3,397,871.
Hasselberg, William J., to Hasselberg, Inc. Carbonator. 3,397,-871, 8-20-68, Cl. 261—75.
Hatcher, John C., to Cole Mfg. Co. Mounting for soil tilling disc. 3,397,933, 8-20-68, Cl. 308—181.
Hatke, Fred L., and G. W. Gray, to Radio Corp. of America. Signaling loop including unbroken railroad track. 3,398,275, 8-20-68, Cl. 246—34.
Hattendorf, Edwin R., to Collins Radio Co. Aircraft vertical path computer. 3,398,267, 8-20-68, Cl. 235—150.26.
Hatton, Richard L.: *See*—
Betts, Minford E., and Hatton. 3,397,634.
Haumiller, Clifford A. Vibrational feeding devices. 3,397,768, 8-20-68, Cl. 198—220.
Hawkins, Curtis O.: *See*—
Burke, James De J., Jr., and Hawkins. 3,397,427.
Hawley, Wilbur J., and L. Merrick, to Air Preheater Co., Inc. Method of drawing formed material from a plurality of sources. 3,397,826, 8-20-68, Cl. 226—1.
Hayashi, Tsuneo: *See*—
Yasufuku, Matami, Kawamura, and Hayashi. 3,398,029.
Hazeltine Research, Inc.: *See*—
Suleski, Anthony C. 3,398,076.
Heard, Jeffery G., and P. M. J. Davies, to The English Electric Co. Ltd. Rotating machinery. 3,398,304, 8-20-68, Cl. 310—61.
Hecker, Arthur C., and N. L. Perry, to Argus Chemical Corp. Polyolefins stabilized with mixtures comprising an organic phosphorus acid, phosphite triester and thiodipropionate. 3,398,115, 8-20-68, Cl. 260—45.85.
Hedenstad, Charles R.: *See*—
Buchanan, William T., and Hedenstad. 3,397,956.
Hedgecock, Henry F. Outdoor recreational picnicking structure. 3,397,881, 8-20-68, Cl. 272—33.
Heisler, Raymond A. Reversible sprag-type film escapement mechanism. 3,397,827, 8-20-68, Cl. 226—59.
Helland, Kristian L.: *See*—
Tregay, John L., and Helland. 3,398,259.
Heller, Walter E., & Co., Inc.: *See*—
Juelss, David. 3,397,938.
Hellige, Fritz, & Co. G.m.b.H.: *See*—
Weber, Paul. 3,398,359.
Helwig, Lawrence E.: *See*—
Harvey, Mahlon A., and Helwig. 3,398,010.
Hempel, Werner: *See*—
Klemm, Rudolf, Wagner, Ehrentraut, Hempel, and Schumann. 3,398,039.
Hemphill, Richard A.: See—
Kelly, William S., Weidling, and Hemphill. 3,397,813.
Henderson, John K. Submergible electrical connector. 3,398,-392, 8-20-68, Cl. 339—117.
Henderson, Stanford A., to Gomco Surgical Mfg. Corp. Suction pump. 3,397,648, 8-20-68, Cl. 103—236.
Hendrickx, Andreas J. J., to Van Der Grinten N. V. Light sensitive diazotype material and diazonium compounds therefor. 3,397,985, 8-20-68, Cl. 96—91.
Henning, Sverker A., to Arenco Aktiebolag. Bag. 3,397,835, 8-20-68, Cl. 229—66.
Henry, Frank E.: *See*—
Bock, Ashley P., Henry, and Remond. 3,398,252.
Hercules, Inc.: *See*—
Willis, William D. 3,398,111.
Hermanie, Pieter H. J.: *See*—
Van Der Minne, Johan L., and Hermanie. 3,397,971.
Hervey, David E. Method of preparing flitches for veneer cutting machines. 3,397,723, 8-20-68, Cl. 144—309.

Herz, Arthur H.: *See*—
Millikan, Allan G., and Herz. 3,397,986.
Hewlett-Packard Co.: *See*—
Larsen, Ted L., Archer, and Loebner. 3,398,310.
Heyden, Rudi, and J. Plapper, to Bohme Fettchemie G.m.b.H. Retannage of leather with melamine, dicyandiamide and aldehyde condensate reacted with a low molecular aromatic sulfonate. 3,397,941, 8-20-68, Cl. 8—94.23.
Hickey, Gladys B. Urinal. 3,397,698, 8-20-68, Cl. 128—295.
Hickman, John S.: *See*—
Shea, Yale R., and Hickman. 3,397,497.
Highberg, Carle W., to Engelhard Hanovia, Inc. Surfacing apparatus. 3,397,493, 8-20-68, Cl. 51—356.
Hildred, Gordon C.: *See*—
Thompson, Joshua B., and Hildred. 3,398,191.
Hill, John C.: *See*—
Wyard, Walter H., and Hill. 3,397,510.
Hill, William H., to Litton Systems, Inc. Multiple-frequency generators. 3 398,377, 8-20-68, Cl. 331—16.
Hiller, Karl: *See*—
Strohmeyer, Max, Hiller, Scholz, and Kindler. 3,398,206.
Himmelmann, Wolfgang: *See*—
Keberle, Wolfgang, Himmelmann, Dieterich, Bayer, and Nittel. 3,397,989.
Hinchee, Lloyd M. Article conveyor system. 3,397,802, 8-20-68, Cl. 214—38.
Hindersinn, Raymond R., and E. J. Quinn, to Hooker Chemical Corp. Polyesters of diacid halide, alkyl bisphenol and glycol. 3,398,120, 8-20-68, Cl. 260—47.
Hipp, Hartmut: *See*—
Prichodjko, Alexander, Simianer, and Hipp. 3,398,268.
Hi Pressure Soil Stabilizers, Inc.: *See*—
Moulden, Robert R. 3,397,542.
Hirshfield, Jay L. Relativistic electron cyclotron maser. 3,398,376, Cl. 330—4.3.
Hi-Shear Corp.: *See*—
Batten, Ronald W. 3,397,601.
Hitco: *See*—
Jones, Peter. 3,397,720.
Hobbs, Charles C.: *See*—
MacLean, Alexander F., and Hobbs. 3,398,185.
Hobbs, Robert B. Erasure tape mechanism for typewriters. 3,397,767, 8-20-68, Cl. 197—181.
Hochstein, Francis A., to Chas. Pfizer & Co., Inc. Hexamethonium salts as growth promoters in animal feed compositions. 3,397,990, 8-20-68, Cl. 99—2.
Hockett, Corwin G., to Reynolds Metals Co. Fence construction. 3,397,866, 8-20-68, Cl. 256—22.
Hodge, Robert B., to Hughes Aircraft Co. Gas replenishment device. 3,397,819, 8-20-68, Cl. 222—3.
Hoefliger & Karg: *See*—
Tjaden, Jan. 3,397,774.
Hofer, Walter D., 50% to J. C. Swinarton, and 50% to T. R. Gorman. Mowing apparatus having belt drive. 3,397,524, 8-20-68, Cl. 56—290.
Hoffmann, Maurice F.: *See*—
Holmes, Ronald L. W., and Hoffman. 3,397,878.
Hoffman, Norman E., to AMP, Inc. Circuit board with interconnected signal conductors and interconnected shielding conductors. 3,398,232, 8-20-68, Cl. 174—68.5.
Hoffmann-La Roche Inc.: *See*—
Berger, Leo, Stempel, Sternbach, and Wenis. 3 398,159.
Brust, Bernard, Fryer, and Sternbach. 3,398,156.
Field, George F., and Sternbach. 3,398,139.
Goldberg, Moses W., Lehr, and Muller. 3,398,180.
Hogan, Mary A. Beautician's instrument kit. 3,397,706, 8-20-68, Cl. 132—79.
Holley Carburetor Co.: *See*—
Saussele, Charles W. 3,397,587.
Holmes, Peter D., R. C. Pitkethly, and A. R. Thornhill, to The British Petroleum Co. Ltd. Preparation of silica alumina composites for use in the hydrocracking of hydrocarbons. 3,398,084, 8-20-68, Cl. 208—111.
Holmes, Ronald L. W., and M. F. Hoffman, to Union Carbide Corp. Under-bath tuyere. 3,397,878, 8-20-68, Cl. 266—41.
Holtschmidt, Hans: *See*—
Tarnow, Horst, Holtschmidt, and Unterstenhofer. 3,398,192.
Holtzman, Arnold H.: *See*—
Bergmann, Oswald R., Cowan, and Holtzman. 3,397,444.
Honeywell, Inc.: *See*—
Budd, John M., Jr. 3,398,354.
Hood, John S.: *See*—
Currin, Cedric G., and Hood. 3,397,447.
Hook, Richard W.: *See*—
Sanderson, Leon F., Hook, and McCunn. 3,397,522.
Hooker Chemical Corp.: *See*—
Hindersinn, Raymond R., and Quinn. 3,398,120.
Shepard, Alvin F., and Dannels. 3,398,122.
Hoover Co., The: *See*—
Bowers, Donald R. 3,398,250.
Horrom, Bruce W., to Abbott Laboratories. 2,6-dichloro-isonicotinamide derivatives and a method for their preparation. 3,398,155, 8-20-68, Cl. 260—295.
Hort, Eugene V., and C. A. Bergman, to GAF Corp. Method and composition for fracturing permeable earth formations. 3,397,744, 8-20-68, Cl. 166—42.
Horvay, Julius B.: *See*—
King, Ralph E., and Horvay. 3,397,551.
Hosemann, Rolf, and H. Warrikhoff. Radiation detector whose output is independent of the energy distribution of incident radiation. 3,398,282, 8-20-68, Cl. 250—83.6.
Hostettler, Fritz, and E. F. Cox, to Union Carbide Corp. Tin-containing catalyst for isocyanate reactions. 3,398,106, 8-20-68, Cl. 260—18.
Houtsma, Cornelius G. Navigational marker. 3,397,413, 8-20-68, Cl. 9—8.

Hovercraft Development Ltd.: *See*—
Hunt, Rowland D., and Tripp. 3,397,753.
Hovland, Mark L.: *See*—
Whaley, Henry P., and Hovland. 3,397,844.
Howard, Charles S., and G. A. Rudolph. Dispensing container. 3,397,770, 8-20-68, Cl. 206—42.
Howard, Edward G., Jr., to E. I. du Pont de Nemours and Co. Copolymers of fluoroaldehydes with ethylenically unsaturated monomers. 3,398,123, 8-20-68, Cl. 260—73.
Howard, Shirly L., to International Telephone and Telegraph Corp. Panoramic signal detector and display. 3,398,365, 8-20-68, Cl. 324—77.
Howell, Cleves H., Jr., to United States of America, Army. Method for spray forming of tubular bodies. 3,397,732, 8-20-68, Cl. 164—46.
Hoyt, John M.: *See*—
Bolstad, Archibald N., and Hoyt. 3,398,128.
Hribar, Frank, Jr.: *See*—
Tenkku, Wayland A., and Hribar. 3,397,717.
Hubbard, Arthur L., to Deere & Co. Cotton harvester. 3,397,523, 8-20-68, Cl. 56—41.
Huber, Gerald, D. Knodler, and H. Kropfl, to Siemens Aktiengesellschaft. Spacer for box-shaped nuclear fuel element. 3,398,053, 8-20-68, Cl. 176—78.
Huber, Louis H.: *See*—
Ganung, Robert B., and Huber. 3,397,824.
Hubers, Cornelis. Internal combustion engine with a turbo-compressor. 3,397,532, 8-20-68, Cl. 60—13.
Hudson Engineering Corp.: *See*—
Gunter, Addison Y. 3,397,741.
Huen, Tony, to United States of America, Atomic Energy Commission. Frequency converter using large signal square-law semiconductor. 3,398,297, 8-20-68, Cl. 307—220.
Hughes Aircraft Co.: *See*—
Hodge, Robert B. 3,397,819.
Jenny, Dietrich A. 3,397,449.
Lehrer, Norman H., and Ketchpel. 3,398,021.
Hughes, Francis A.: *See*—
Galvin, Thomas J., and Hughes. 3,397,953.
Hughes, M. Dudley: *See*—
Owens, Carl W. and B. 3,397,745.
Hughes, Robert L.: *See*—
McClintic, Bruce F., and Hughes. 3,397,759.
Hultgren, William H., to Champion Laboratories, Inc. Dual element filter assembly having plural valves therein. 3,397,786, 8-20-68, Cl. 210—132.
Hultzsch, Erasmus: *See*—
Ehrhardt, Joachim, Hultzsch, Meier, and Söldner. 3,397,459.
Hunt, John E., and M. R. Fiore, to The Alumiline Corp. Sliding door construction and means for storing same. 3,397,487, 8-20-68, Cl. 49—130.
Hunt, Rowland D., and A. R. Tripp, to Hovercraft Development Ltd. Gas-cushion vehicles with flexible skirts. 3,397,753, 8-20-68, Cl. 180—127.
Huntingdon Industries, Inc.: *See*—
Ullman, John E. 3,397,509.
Hursh, Neal W.: *See*—
Lemke, Eugene, and Hursh. 3,398,319.
Hursh, Neal W., to Radio Corp. of America. Dynamic color purity apparatus. 3,398,320, 8-20-68, Cl. 315—27.
Huynh, Chanh: *See*—
Martel, Jacques, and Huynh. 3,398,160.
Hydrocarbon Research, Inc.: *See*—
Engle, Theodore M. 3,398,085.
Hydro-Craft Inc.: *See*—
Walker, William R. 3,397,431.
Hydronautics, Inc.: *See*—
Slager, John J., and Webster. 3,397,664.
Hynd, William C., to Pilkington Bros. Ltd. Floating refractory draw bar. 3,397,976, 8-20-68, Cl. 65—344.
I-T-E Circuit Breaker Co.: *See*—
Cataldo, John B., and Kussy. 3,398,329.
McCloud, James R. 3,398,247.
McCormick, Joseph F. 3,398,344.
Shaffer, Howard R. 3,398,325.
Icore Industries: *See*—
Wilder, Leslie N. 3,397,779.
Ilani, Asher, to Yissum Research Development Co. Method and apparatus for the determination of K and Na. 3,398,066, 8-20-68, Cl. 204—1.
Ilford Ltd.: *See*—
Fry, Douglas J., and Keogh. 3,398,148.
Illingsworth, Bernard D.: *See*—
Luckey, George W., and Illingsworth. 3,397,987.
Illinois Railway Equipment Co.: *See*—
Sweger, Theodore J. 3,397,930.
Imbright, Giorgio: *See*—
Sarati, Luigi, and Imbright. 3,398,296.
Imperial Chemical Industries Ltd.: *See*—
Barben, Ian K., and Stead. 3,398,133.
Downes, John E. 3,398,154.
Fowler, John L., and Sherliker. 3,398,046.
Gibb, Alexander R. M. 3,398,184.
Turner, Ralph W. 3,398,161.
Williams, Richard A. 3,398,195.
Imperial Metal Industries (Kynoch) Ltd.: *See*—
Moore, Graham E. 3,397,589.
Impromex A.G.: *See*—
Van 't Hoff, Teunis. 3,397,867.
Industrial Electronic Rubber Co.: *See*—
Kaufman, Bruce F., Jr., and Mong. 3,398,222.
Industrial Instruments, Inc.: *See*—
Pallatz, Harold. 3,398,369.
Industrial Tectonics, Inc.: *See*—
Hanau, Heinz. 3,397,439.
Industrie-Werke Karlsruhe Aktiengesellschaft: *See*—
Madlener, Paul, and Pecksen. 3,397,635.
Ingalls Shipbuilding Corp., The: *See*—
Leavitt, Clyde M. 3,397,545.

Inland Container Corp.: *See*—
Adams, Marion F. 3,397,831.
Inland Steel Co.: *See*—
Trbovich, Nick. 3,397,566.
Trowbridge, Charles D. 3,397,907.
Inland Steel Products Co.: *See*—
Shea, Yale R., and Hickman. 3,397,497.
Ward, John R. 3,397,499.
Inman, Eric R., H. M. Smith, and I. A. Macpherson, to J. R. Geigy A.G. Naphth[2,3-b]indolizine-6,11-diones. 3,398,153, 8-20-68, Cl. 260—294.9.
Inman, Richard B.: *See*—
Allen, Grant E., Jr., Robinson, and Inman. 3,397,506.
Inta-Roto Machine Co., Inc., The: *See*—
Haskin, Lawrence H., Jr., and Kesler. 3,397,848.
International Business Machines Corp.: *See*—
Dill, Frederick H., Jr. 3,398,335.
Glang, Reinhard, and Lessor. 3,398,032.
Lee, Lyle H. 3,398,241.
International Computers and Tabulators Ltd.: *See*—
Walker, Peter A., Maller, and Bonyhard. 3,398,299.
International Copper Research Association: *See*—
Baker, Robert A., and Doerr. 3,398,101.
International Harvester Co.: *See*—
Johnston, Edward J., and Peacock. 3,397,520.
Kampert, Keith W. 3,397,893.
Karlsson, Elof K. 3,397,778.
Roberson, Raymond F. 3,397,747.
Saina, Karl. 3,397,752.
Scarnato, Thomas J., Sorensen, Dryan, and Lawler. 3,397,923.
Woodring, Robert W. 3,397,525.
International Minerals & Chemical Corp.: *See*—
Gregor, Harry P. 3,398,078.
Jelesiewicz, Anthony C. 3,397,435.
International Processes Ltd.: *See*—
Hall, Richard T. 3,397,460.
International Standard Electric Corp.: *See*—
Brewster, Arthur E. 3,398,289.
Delaigue, Serge, and Rauche. 3,398,402.
Rupp, Heinrich, and Norz. 3,398,400.
International Telephone and Telegraph Corp.: *See*—
Howard, Shirly L. 3,398,365.
Rabow, Gerald. 3,398,239.
Shockley, William. 3,398,334.
Interstate Electronics Corp.: *See*—
Carter, Howard J. 3,397,573.
Ionics, Inc.: *See*—
Greatorex, John L. 3,398,091.
Juda, Walter. 3,398,069.
Iota-Cam Corp.: *See*—
Gosselin, Norman R. 3,397,457.
Irland, Frank W., to Libbey-Owens-Ford Glass Co. Apparatus for producing sheet glass. 3,397,975, 8-20-68, Cl. 65—182.
Isham, Carroll E.: *See*—
Piekarski, Leonard. 3,398,328.
Piekarski, Leonard. 3,398,384.
Issidorides, Costas H.: *See*—
Haddadin, Makhluf J., and Issidorides. 3,398,141.
Ito, Yukiaki, to Mitsubishi Jukogyo Kabushiki. Method for rebuilding the hull of a ship to increase its tonnage. 3,397,663, 8-20-68, Cl. 114—77.
Ivanov, Arkady V.: *See*—
Gitis, Semen S., and Ivanov. 3,398,194.
Jackson, Winston J., Jr., and J. R. Caldwell, to Eastman Kodak Co. Bisphenol polycarbonates and polyesters containing units derived from a thiodiphenol. 3,398,212, 8-20-68, Cl. 260—860.
Jacobs, Daniel A., and J. B. Duke, to Engelhard Minerals & Chemicals Corp. Grinding method. 3,398,008, 8-20-68, Cl. 106—288.
Jacobsen, John B., and W. R. Carpenter, to Detrex Chemical Industries, Inc. Sight glass cleaning. 3,398,023, 8-20-68, Cl. 134—22.
Jacobson, David E., and S. Y. Ek, to Wegematic Corp. Wear reduction additives. 3,397,636, 8-20-68, Cl. 102—38.
Jahn, Reinhardt H. Fire-rated runner with expansion section. 3,397,501, 8-20-68, Cl. 52—573.
James, Robert L., to The Bendix Corp. Dual channel trigistor output stage motor speed and reversing control system. 3,398,345, 8-20-68, Cl. 318—341.
Jamey, Maurice A., P. J. P. Maurel, and P. A. Duhart, to Pechiney-Compagnie de Produits Chimiques et Electro-metallurgiques. Process for the preparation of crystallized neutral aluminum sulphates having low water content. 3,397,951, 8-20-68, Cl. 23—123.
Jamieson, Robert S., to Lorain Products Corp. Apparatus and method for starting, operating and stopping an inverter. 3,398,352, 8-20-68, Cl. 321—45.
Japan Exlan Co. Ltd.: *See*—
Fujita, Yoshimasa, Kuratani, and Zoda. 3,397,426.
Japikse, Cornelis H., to The Procter & Gamble Co. Oleaginous gel composition. 3,397,997, 8-20-68, Cl. 99—118.
Jarvis, Marvin A., and J. F. Stratman, to Aerojet-General Corp. Water purifying apparatus employing stacked assembly of reverse osmosis cells. 3,397,785, 8-20-68, Cl. 210—125.
Jeitner, Franz, K. Reinhart, and J. Semmler, to Arbeitsgemeinschaft Versuchs-Reaktor AVR G.m.b.H. Nuclear fuel element. 3,398,052, 8-20-68, Cl. 176—71.
Jelesiewicz, Anthony C., to International Minerals & Chemical Corp. Attachment for a brick press. 3,397,435, 8-20-68, Cl. 25—103.
Jenny, Dietrich A., to Hughes Aircraft Co. Making P-N junction under glass. 3,397,449, 8-20-68, Cl. 29—578.
Jensen, Neil T. Variable speed reversible rotary hydraulic power transmission. 3,397,618, 8-20-68, Cl. 91—149.

Jensen, Stephen F.: *See*—
Elam, William B., and Jensen. 3,398,037.
Jenssen, Sverre K., A. B. Ljungstrom, and B.-A. Ohlsson, to Alfa-Laval AB. Plate heat exchanger. 3,397,742, 8-20-68, Cl. 165—167.
Jeppson, Morris R., and J. C. Harper, to Cryodry Corp. Microwave heating of substances under dydrostatic pressure. 3,398,251, 8-20-68, Cl. 219—10.41.
Jepsen, Henry E. Submerged motor reciprocating well pump. 3,397,643, 8-20-68, Cl. 103—46.
Jobst Institute, Inc.: *See*—
Gottfried, Max. 3,397,688.
Johansson, Johan I., to Avesta Jernverks Aktiebolog. Method for the manufacture of cylindrical containers particularly so called cisterns. 3,397,443, 8-20-68, Cl. 29—421.
Johnson, Allan S. Drive for a tapping attachment. 3,397,588, 8-20-68, Cl. 74—376.
Johnson, Arthur K.: *See*—
Steffanson, Robert S., Barnard, and Johnson. 3,398,080.
Johnson, Carl V., to Technicon Corp. Dialyzer clamping means. 3,397,791, 8-20-68, Cl. 210—321.
Johnson, John H.: *See*—
Fields, Joseph E., and Johnson. 3,398,092.
Johnson & Johnson: *See*—
Zackheim, Eli A. 3,397,814.
Johnson, Oscar V. Low pressure indicator for vehicle tires. 3,398,398, 8-20-68, Cl. 340—58.
Johnson, Robert A., and P. T. Anderson. Blended protein isolation process and product. 3,397,991, 8-20-68, Cl. 99—17.
Johnson, Robert R., to Research-Cottrell, Inc. Hopper valve for filter bag installation. 3,397,515, 8-20-68, Cl. 55—302.
Johnson, Wendell L., and M. E. Ross, to Dow Corning Corp. One-component siloxane elastomer. 3,398,112, 8-20-68, Cl. 260—37.
Johnston, Edward A.: *See*—
De Lizasoain, Gabriel V., Martin, and Otano. 3,398,233.
Johnston, Edward J., and P. J. Peacock, to International Harvester Co. Hay harvesting and conditioning device. 3,397,520, 8-20-68, Cl. 56—1.
Jones, Burton B., ⅓ each to W. D. Shepherd, and F. Young. Heat device. 3,397,686, 8-20-68, Cl. 126—59.5.
Jones, David H., to Beloit Corp. Valve means. 3,397,718, 8-20-68, Cl. 137—605.
Jones, Myrton N., to General Motors Corp. Level indicating tank closure. 3,397,808, 8-20-68, Cl. 220—44.
Jones, Peter, to Hitco. Multiple layer insulation for a cryogenic structure. 3,397,720, 8-20-68, Cl. 138—149.
Jones, Phillip T.: *See*—
Brown, Lawrence E., and Jones. 3,398,307.
Jones, Richard V., and A. B. Smith, to United States of America, Air Force. Capacitively driven microwave modulators. 3,398,382, 8-20-68, Cl. 332—29.
Jones, Richard V., and A. B. Smith, to United States of America, Air Force. Microwave modulator using anisotropic effects of ferromagnetic resonance in single crystals. 3,398,383, 8-20-68, Cl. 332—29.
Jordan, Merrill E., W. G. Burbine, H. M. Cole, and D. L. Petterson, to Cabot Corp. Carbon black process. 3,397,961, 8-20-68, Cl. 23—209.8.
Juda, Walter, to Ionics, Inc. Electrolysis of aqueous electrolyte solutions. 3,398,069, 8-20-68, Cl. 204—98.
Judd, Clark W., to Shell Oil Co. Vapor-space inhibitors. 3,398,095, 8-20-68, Cl. 252—47.5.
Juelss, David, to Walter E. Heller & Co., Inc. Absorbent nib writing device. 3,397,938, 8-20-68, Cl. 401—198.
Jurisch, Otto: *See*—
Schatz, Gunther, Gemeinhardt, Brucher, and Jurisch. 3,398,223.
Kabushiki Kaisha Hitachi Seisakusho: *See*—
Suzuki, Yoshihisa. 3,398,301.
Kabushiki Kaisha Yaskawa Denki Seisakusho: *See*—
Tanaka, Tameo. 3,398,293.
Kahn, Walter C., to Electro-Trace Corp. Pipe heating arrangement. 3,398,262, 8-20-68, Cl. 219—301.
Kaiser, Arthur: *See*—
Torick, Emil, and Kaiser. 3,398,381.
Kaiser, Francis D.: *See*—
Evans, Paul, Jr., and Kaiser. 3,398,349.
Kallenberg, Karl J., to Pako Corp. Transparency holder for photographic printer. 3,397,613, 8-20-68, Cl. 88—24.
Kamborian, Jacob S., W. A. Vorn Berger, and J. H. Arsenault; said Vorn Berger, and said Arsenault, assors. to said Kamborian. Pulling over and lasting of shoes. 3,397,417, 8-20-68, Cl. 12—145.
Kampert, Keith W., to International Harvester Co. Cylinder construction. 3,397,893, 8-20-68, Cl. 277—24.
Kane, Robert A.: *See*—
Hanzalek, Frederick J., and Kane. 3,397,679.
Kansas City Star Co., The: *See*—
Betts, Minford E., and Hatton. 3,397,634.
Kaplan, Sam H., to The Rauland Corp. Post-deflection-focus cathode-ray tube. 3,398,309, 8-20-68, Cl. 313—85.
Kaprelian, Robert A., to Compagnie du Filage des Metaux et des Joints Curty. Method of hot extrusion of metals and alloys on slowly operated presses. 3,397,560, 8-20-68, Cl. 72—41.
Karlsson, Elof K., to International Harvester Co. Rotary suction type cleaning system. 3,397,778, 8-20-68, Cl. 209—23.
Karpac, John A.: *See*—
Ritchie, Charles I., and Karpac. 3,397,873.
Karsten, Kenneth S., and W. F. Russell, to R. T. Vanderbilt Co., Inc. Dimethylthiocarbamoyl S-alkyldithiocarbonates. 3,398,181, 8-20-68, Cl. 260—455.
Katehis, George. Amphibious vehicle. 3,397,669, 8-20-68, Cl. 115—2.
Katzen, Sol. Aircraft. 3,397,852, 8-20-68, Cl. 244—12.
Katzman, Lawrence, and R. Dublirer, to Kaz Heating Products, Inc. Pizza warmer. 3,398,264, 8-20-68, Cl. 219—454.

Katzor, Karl A.: *See*—
Cane, Domenick, Katzor, and Rabas. 3,398,059.
Kaufman, Bruce F., Jr., and R. R. Mong, to Industrial Electronic Rubber Co. Method of making a plastic and rubber wheel. 3,398,222, 8–20–68, Cl. 264—250.
Kaufman, Karl G.: *See*—
Estep, Mickey L., and Kaufman. 3,397,602.
Kaufman, Maxime G., to United States of America, Navy. Time gated filter. 3,398,374, 8–20–68, Cl. 328—165.
Kawabe, Kiyoshi: *See*—
Tohda, Minoru, Kuwana, and Kawabe. 3,398,147.
Kawamura, Toyosaku: *See*—
Yasufuku, Matami, Kawamura, and Hayashi. 3,398,029.
Kaz Heating Products, Inc.: *See*—
Katzman, Lawrence, and Dubilier. 3,398,264.
Keberle, Wolfgang, W. Himmelmann, D. Dieterich, O. Bayer, and F. Nittel, to Agfa-Gevaert Aktiengesellschaft. Photographic, gelatin-containing layers. 3,397,989, 8–20–68, Cl. 96—114.
Keith, Percy A. Cotton picker spindle reconditioning machine. 3,397,491, 8–20–68, Cl. 51—34.
Keller, Hans-Otto, to Maschinenfabrik Moenus A.G. Fully automatic machine for the working of sole edges on crude soles. 3,397,415, 8–20–68, Cl. 12—86.65.
Keller, Orville F.: *See*—
Toth, Louis R., and Keller. 3,397,794.
Kellerman, Rudolf A., to V. R. Smith Olive Co., Inc. Process for holding olives before processing. 3,397,999, 8–20–68, Cl. 99—156.
Kelly, William A., and P. J. Petix, to Lever Brothers Co. Method for making multi-colored soap bars. 3,398,219, 8–20–68, Cl. 264—102.
Kelly, William S., F. M. Weidling, and R. A. Hemphill, to United States of America, Atomic Energy Commission. Dumping construction. 3,397,813, 8–20–68, Cl. 220—55.
Kemmetmueller, Roland, to Waagner-Biro AG. Controls for waste gas cooling stacks of metallurgical furnaces, of BOF converters, or the like. 3,397,678, 8–20–68, Cl. 122—7.
Kennard, William W.: *See*—
Ford, Douglas L., and Kennard. 3,398,286.
Kennedy, Robert B. Time schedule calculator. 3,397,840, 8–20–68, Cl. 235—120.
Keogh, Patrick J.: *See*—
Fry, Douglas J., and Keogh. 3,398,148.
Keppel, Ernst, to Joh. Vaillant, KG. Oil burner, more particularly for continuous-flow heaters. 3,397,940, 8–20–68, Cl. 431—28.
Kersh, Ronald C., to Proen Products Co. Control valve. 3,397,541, 8–20–68, Cl. 61—13.
Kersnar, Paul W., and S. Taormina, to Progressive Products Co. Cleaning composition and method of cleaning and sequestering metal ions. 3,398,097, 8–20–68, Cl. 252—152.
Kersnar, Paul W., and S. Taormina, to Progressive Products Co. Less than fully propylated (beta hydroxy propyl) ethylene diamine and method of preparation thereof. 3,398,198, 8–20–68, Cl. 260—584.
Kesler, George W.: *See*—
Haskin, Lawrence H., Jr., and Kesler. 3,397,848.
Ketchpel, Richard D.: *See*—
Lehrer, Norman H., and Ketchpel. 3,398,021.
Kettering, Charles F., Foundation: *See*—
Treharne, Richard W., and McKibben. 3,398,281.
Keuffel & Esser Co.: *See*—
Ellis, Charles R. 3,397,608.
Keyes Fibre Co.: *See*—
Randall, Walter H. 3,398,049.
Keystone Brass & Rubber Co., Inc.: *See*—
Schlank, Lionel I. 3,397,409.
Kidde, Walter, & Co.: *See*—
Whitehill, Norris D. 3,397,433.
Kiehn, Mogens, to Kiehn Products Co. Motorized combined invalid walker and lift device. 3,397,883, 8–20–68, Cl. 272—70.3.
Kiehn Products Co.: *See*—
Kiehn, Mogens. 3,397,883.
Kieslich, Horst, to Ondal G.m.b.H. Hot water heating system. 3,397,841, 8–20–68, Cl. 237—8.
Kilgore, Lee A., H. E. Spindle, L. A. Casanova, and T. W. Dakin, to Westinghouse Electric Corp. High voltage electrical converter apparatus and pulse transformer therefor. 3,398,348, 8–20–68, Cl. 321—5.
Kimberly-Clark Corp.: *See*—
Rickard, Charlotte I. 3,397,696.
Rickard, Charlotte I. 3,397,697.
Kindler, Hubert, U. Soenksen, and A. Wittwer, to Badische Anilin- & Soda-Fabrik Aktiengesellschaft. Production of aminoalkanol sulfuric acids. 3,398,183, 8–20–68, Cl. 260—458.
Kindler, Hubert: *See*—
Strohmeyer, Max, Hiller, Scholz, and Kindler. 3,398,206.
King, Ralph E., and J. B. Horvay, to General Electric Co. Temperature control means for refrigerator. 3,397,551, 8–20–68, Cl. 62—202.
Kinney, S. P., Engineers, Inc.: *See*—
Carr, Hugh B. 3,397,784.
Kinoshita, Shigenobu: *See*—
Kitagawa, Hideji, Kinoshita, and Uchiyama. 3,397,944.
Kirchdoerfer, Herman. Tongue depressor. 3,397,687, 8–20–68, Cl. 128—15.
Kirkpatrick, Wylie C., to The Glidden Co. Container and dispensing closure therefor. 3,397,823, 8–20–68, Cl. 222—480.
Kirshenbau, Isidor: *See*—
Spenadel, Lawrence, Hall, and Kirshenbau. 3,398,215.
Kitagawa, Hideji, S. Kinoshita, and H. Uchiyama, to Toyo Rayon Kabushiki Kaisha. Deposition of alkaline material on viscose-fluoroethylene fibers prior to sintering. 3,397,944, 8–20–68, Cl. 8—137.5.
Klauke, Erich: *See*—
Frohberger, Paul-Ernst, Klauke, and Kuhle. 3,398,190.
Klauss, Ralph E., to Eastman Kodak Co. Cam actuator. 3,398,248, 8–20–68, Cl. 200—153.
Klein, Gustave J., and W. P. O'Rourke, to Knomark, Inc. Waxy copolymers, useful in polish compositions, and containing pendant carboxylic and ester groups. 3,398,110, 8–20–68, Cl. 260—33.4.
Kleinerman, Marcos, to American Optical Co. Fluorescent europium chelates. 3,398,099, 8–20–68, Cl. 252—301.2.
Klemm, Rudolf, F. Wagner, H. Ebrentraut, W. Hempel, and K. Schumann, to Veb Transformatoren- und Rontgenwerk Dresden. Equipment for making laminations for X-ray antidiffusing screens. 3,398,039, 8–20–68, Cl. 156—510.
Klingler, Karl H., to Deutsche Gold- und Silber-Scheideanstalt vormals Roessler. Certain 7-phenethylaminopropyl-theophylline derivatives. 3,398,150, 8–20–68, Cl. 260—256.
Klingler, Martin L., to AMP, Inc. Electric handtool or press. 3,397,567, 8–20–68, Cl. 72—416.
Klockner-Humboldt-Deutz, Aktiengesellschaft: *See*—
Muller, Franz. 3,397,845.
Klumb, Harvey A., to Taylor Instrument Cos. Motion amplifying mechanism for pressure responsive instrument movement. 3,397,578, 8–20–68, Cl. 73—386.
Knight, George R., Jr.: *See*—
Basile, Norman K., Bridges, and Knight. 3,397,662.
Knoblock, Frederick D. Differential. 3,397,593, 8–20–68, Cl. 74—650.
Knodler, Diethelm: *See*—
Huber, Gerald, Knodler, and Kropfl. 3,398,053.
Knomark, Inc.: *See*—
Klein, Gustave J., and O'Rourke. 3,398,110.
Knowles, James, to Ford Motor Co. Engine secondary air injection control. 3,397,534, 8–20–68, Cl. 60—30.
Kobetz, Paul: *See*—
Giraitis, Albert P., Kobetz, and Beaird. 3,398,171.
Kobnick, Werner, to Berg Mfg. & Sales Co. Air filter for air brake systems. 3,397,516, 8–20–68, Cl. 55—313.
Koch, Earl E., to Sperry Rand Corp. Dual rake bushing for sickle drives. 3,397,584, 8–20–68, Cl. 74—60.
Koch, Tobias. Dry-grip sleeve. 3,397,891, 8–20–68, Cl. 273—162.
Koch, Wilhelm, to National Rejectors, Inc. Plural armature bidirectional stepper. 3,398,303, 8–20–68, Cl. 310—22.
Koepp, Hans-Martin: *See*—
Rein, Walter, Siggel, and Koepp. 3,398,124.
Kohl, Gerald C. Retaining catheter having resiliently biassed wing flanges. 3,397,699, 8–20–68, Cl. 128—349.
Kondur, Louis, and C. A. Dehne, to Jervis B. Webb Co. Braking device for power and free conveyor carriers. 3,397,650, 8–20–68, Cl. 104—172.
Kornick, John B., and E. A. Broestl, to Republic Steel Corp. Plastic coated dowel bar for concrete. 3,397,626, 8–20–68, Cl. 94—8.
Koster, Alfred: *See*—
Schnurch, Roland, Koster, and Freyhold. 3,397,950.
Krafft, Joseph M.: *See*—
Stolz, Walter A., Krafft, and Bird. 3,397,572.
Kratochvil, Friedrich, to Telefunken Patentverwertungs-G.m.b.H. Television receiver brightness control. 3,398,236, 8–20–68, Cl. 178—7.5.
Krebs, Bernard: *See*—
Besson, Francis, and Krebs. 3,397,530.
Krochmal, Jerome J., I. Shapiro, and C. T. Lynch. Preparation of films of boron carbide. 3,398,013, 8–20–68, Cl. 117—106.
Krogstad, Reuben S., and V. and W. Vail; said Krogstad and V. Vail assors. to The Boeing Co. Radiation sensitive geophysical strain measuring apparatus. 3,398,287, 8–20–68, Cl. 250—220.
Kropfl, Hans: *See*—
Huber, Gerald, Knodler, and Kropfl. 3,398,053.
Kuba, Richard E., to North Electric Co. Current supply apparatus. 3,398,292, 8–20–68, Cl. 307—51.
Kuban, William G., to Kurt Mfg. Co. Vise clamp. 3,397,880, 8–20–68, Cl. 269—240.
Kuczynski, George C.: *See*—
Lavendel, Henry W., Bruce, Clauss, Elliot, and Kuczynski. 3,397,968.
Kuhle, Engelbert: *See*—
Fronhberger, Paul-Ernst, Klauke, and Kuhle. 3,398,190.
Kuhlkamp, Alfred, and R. Nowack, to Farbwerke Hoechst Aktiengesellschaft vormals Meister Lucius & Bruning. Foam plastics and process for making them. 3,398,103, 8–20–68, Cl. 260—2.5.
Kuhn, Lester P.: *See*—
Pillersdorf, Arthur, Kuhn, and Bowman. 3,398,007.
Kulig, Constantine W.: *See*—
Lyle, Aaron K., and Kulig. 3,397,609.
Kuniskis, Casemiro A. Combination vehicle stabilizer and force equalizer. 3,397,895, 8–20–68, Cl. 280—6.
Kuntke, Alfred, to North American Philips Co., Inc. High voltage rectifier assembly having tubular capacitor compensation means. 3,398,351, 8–20–68, Cl. 321—11.
Kurashiki Rayon Co., Ltd.: *See*—
Eguchi, Tamotsu, and Okaya. 3,398,074.
Kuratani, Keijiro: *See*—
Fujita, Yoshimasa, Kuratani, and Zoda. 3,397,426.
Kureha Kagaku Kogyo Kabushiki Kaisha: *See*—
Shibata, Hiroshi. 3,398,070.
Kurt Mfg. Co.: *See*—
Kuban, William G. 3,397,880.
Kussy, Frank W.: *See*—
Cataldo, John B., and Kussy. 3,398,329.
Kuwana, Noriaki: *See*—
Tohda, Minoru, Kuwana, and Kawabe. 3,398,147.
Kwong, Chao C., and R. L. Kwong. Material separator. 3,397,782, 8–20–68, Cl. 209—477.

Kwong, Raymond L.: *See*—
Kwong, Chao C. and R. L. 3,397,782.
LTV Aerospace Corp.: *See*—
Cavanaugh, Marion E. 3,398,324.
Laing, Nikolaus. Hair dryers. 3,397,463, 8–20–68, Cl. 34—97.
Lajarrige, André, and J. Léger, to Societe des Forges et Aleliers du Creusot. Pyrometric probe. 3,398,027, 8–20–68, Cl. 136—234.
Laliberte, Real, and D. J. Campbell, to American Home Products Corp. Substituted 3-amino-2′-hydroxyacrylophenones. 3,398,144, 8–20–68, Cl. 260—240.
Lamb, F. Jos., Co., Inc.: *See*—
Rye, John K. 3,398,253.
Lamb, John T., to The Tappan Co. Surge relay circuit. 3,398,371, 8–20–68, Cl. 328—9.
Lammler, Georg: *See*—
Schorr, Manfred, Durckheimer, and Lammler. 3,398,146.
Lane, Richard L., to Xerox Corp. Xerographic plate with an inorganic glass binder having an overcoating consisting essentially of aluminum oxide. 3,397,982, 8–20–68, Cl. 96—1.5.
Langberg, Edwin, to Avco Corp. Alternating electric power generator. 3,398,321, 8–20–68, Cl. 315—39.
Langen & Co.: *See*—
Ortheil, Johannes. 3,397,719.
Langguth, Robert P., and H. L. Vandersall, to Monsanto Co. Method for fireproofing cellulosic material. 3,398,019, 8–20–68, Cl. 117—138.
Larkin, Mark E.: *See*—
Bolen, Kenneth E., Larkin, and Wilson. 3,397,724.
Larrivee, Harlan J. Bushing assembly for engaging relatively rigid cylindrical bodies. 3,397,901, 8–20–68, Cl. 285—161.
Larsen, Ted L., R. J. Archer, and E. E. Loebner, to Hewlett-Packard Co. Indirect energy band gap topology injection electroluminescence source. 3,398,310, 8–20–68, Cl. 313—108.
Latimer, Kenneth B., to Tine, Inc. Profile-controlling grating assembly. 3,398,048, 8–20–68, Cl. 162—203.
Laudel, Arthur, Jr.: *See*—
Young, Glenn S., and Laudel. 3,398,368.
Lavendel, Henry W., E. Bruce, F. J. Clauss, A. G. Elliot, and G. C. Kuczynski, to Lockheed Aircraft Corp. Porous materials. 3,397,968, 8–20–68, Cl. 29—182.5.
Lawler, Craig M.: *See*—
Scarnato, Thomas J., Sorensen, Dryan, and Lawler. 3,397,923.
Lawrence, Anthony W.: *See*—
Parkes, Eric, and Lawrence. 3,398,012.
Lazerte, James D.: *See*—
Guenthner, Richard A., and Lazerte. 3,398,182.
Leach, Merry G. Gown tie. 3,397,406, 8–20–68, Cl. 2—96.
Leavitt, Clyde M., to The Ingalls Shipbuilding Corp. Marine structure. 3,397,545, 8–20–68, Cl. 61—46.5.
Lederer, Robert C., to Bendix-Westinghouse Automotive Air Brake Co. Fluid pressure brake system. 3,397,924, 8–20–68, Cl. 303—13.
Lee, Edwin S., III, to Burroughs Corp. Multiple match resolution in associative storage systems. 3,398,404, 8–20–68, Cl. 340—172.5.
Lee, Lyle H., to International Business Machines Corp. Digital storage voice message generator. 3,398,241, 8–20–68, Cl. 179—1.
Leece-Neville Co., The: *See*—
Citro, Angelo M. 3,398,347.
Leeds & Northrup Co.: *See*—
Davis, Raymond L., II. 3,397,875.
Lefebvre, Yvon, and J.-M. Ferland, to American Home Products Corp. Novel cardenolides and derivatives. 3,398,138, 8–20–68, Cl. 260—210.5.
Léger, Jacques: *See*—
Lajarrige, André and Léger. 3,398,027.
Lehr, Hanns H.: *See*—
Goldberg, Moses W., Lehr, and Muller. 3,398,180.
Lehrer, Norman H., and R. D. Ketchpel, to Hughes Aircraft Co. Method of making thin film field sustained conductivity device. 3,398,021, 8–20–68, Cl. 117—200.
Leibson, Irving, and J. B. Bingeman, to Rexall Drug and Chemical Co. Process for preparing predominantly crystalline alpha-olefin polymers. 3,398,129, 8–20–68, Cl. 260—93.7.
Leitheiser, Robert H., to Dow Corning Corp. Silphenylene-containing building blocks. 3,398,175, 8–20–68, Cl. 260—448.2.
Leitz, Ernst, Gesellschaft mit beschrankter Haftung: *See*—
Leitz, Ernst, and Stein. 3,397,606.
Leitz, Ernst, and W. Stein, to Ernst Leitz Gesellschaft mit beschrankter Haftung. Range finder and view finder for photographic cameras. 3,397,606, 8–20–68, Cl. 88—2.7.
Lemke, Eugene, and N. W. Hursh, to Radio Corp. of America. Energizing system for color purity apparatus. 3,398,319, 8–20–68, Cl. 315—27.
Leonardi, Leonard, to Dietz Machine Works, Inc. Apparatus for producing helically wound cylinders. 3,397,625, 8–20–68, Cl. 93—80.
Lessor, Arthur E., Jr.: *See*—
Glang, Reinhard, and Lessor. 3,398,032.
Lever Bros. Co.: *See*—
Das, Balaram, and Van Senden. 3,398,096.
Kelly, William A., and Petix. 3,398,219.
Levin, Alfred A.: *See*—
Richter, Sidney B., and Levin. 3,397,977.
Richter, Sidney B., and Levin. 3,397,978.
Libbey-Owens-Ford Glass Co.: *See*—
Irland, Frank W. 3,397,975.
Zellers, James T., Jr. 3,397,974.
Licentia Patent-Verwaltungs-G.m.b.H.: *See*—
Steimel, Karl. 3,398,308.
Lieber, Roy E., E. Vander Schraaf, and W. J. Dassau, to Esso Research and Engineering Co. Interacting control of distillation. 3,398,087, 8–20–68, Cl. 208—350.

Liljendahl, Sven A. J. Mechanical gas seal for floor drain traps and the like having means for sealing in the trap and at a cover therefor. 3,397,714, 8–20–68, Cl. 137—247.15.
Lilliston Implement Co.: *See*—
Whitesides, Jack C. 3,397,748.
Lincoln, Lewis L., and L. G. S. Brooker, to Eastman Kodak Co. Photographic sensitizing dyes of the merocyanine and styryl types in silver halide photographic emulsions. 3,397,981, 8–20–68, Cl. 96—102.
Linde Aktiengesellschaft Wiesbaden: *See*—
Scholz, Walter. 3,397,959.
Lindly, Lee. Boat anchor. 3,397,665, 8–20–68, Cl. 114—208.
Lindquist, Terry K., to Borg-Warner Corp. Friction plate employing separator means. 3,397,761, 8–20–68, Cl. 192—107.
Linet, William. Brake wear alert device. 3,398,246, 8–20–68, Cl. 200—61.4.
Lingard, Harold A., to Mantua Metal Products Co., Inc. Model-railroad truck assembly. 3,397,483, 8–20–68, Cl. 46—216.
Link, Charles J. Circulating mill guide. 3,397,746, 8–20–68, Cl. 166—117.6.
Lipske, Benjamin B., to National Can Corp. Tear out can end with organic inner seal member. 3,397,811, 8–20–68, Cl. 220—54.
Litt, Morton H.: *See*—
Oxenrider, Bryce C., Litt, and Slavik. 3,398,121.
Littlehales, Herbert J., and P. Birch, to Joseph Lucas (Industries) Ltd. Fuel nozzles. 3,397,843, 8–20–68, Cl. 239—453.
Litton Precision Products, Inc.: *See*—
Wendell, George E. 3,398,387.
Litton Systems, Inc.: *See*—
Hill, William H. 3,398,377.
Ljungstrom, Ake B.: *See*—
Jenssen, Sverre K., Ljungstrom, and Ohlsson. 3,397,742.
Lochmann, Helmut, and K. Quenzer, to Swiss Aluminum Ltd. Electrostatic filtering of impurities from liquids. 3,398,082, 8–20–68, Cl. 204—302.
Lockheed Aircraft Corp.: *See*—
Lavendel, Henry W., Bruce, Clauss, Elliot, and Kuczynski. 3,397,968.
Loebner, Egon E.: *See*—
Larsen, Ted L., Archer, and Loebner. 3,398,310.
Loftus Engineering Corp.: *See*—
Augustine, Alfred. 3,397,874.
Logan, Gerrard A., to Sprague Electric Co. Electrolyte impervious seal for electrolytic capacitor. 3,398,332, 8–20–68, Cl. 317—230.
Long, Albert E. Mitre box. 3,397,722, 8–20–68, Cl. 143—86.
Long, Glen F., to General Electric Co. Spring lock electrical connector. 3,398,390, 8–20–68, Cl. 339—91.
Loper, George B., to Mobil Oil Corp. Pneumatic seismic source. 3,397,755, 8–20–68, Cl. 181—.5.
Lorain Products Corp.: *See*—
Jamieson, Robert S. 3,398,352.
Lovelett, William C., to CF & I Steel Corp. Tension control apparatus. 3,397,721, 8–20–68, Cl. 140—147.
Lowes, Frederick J., Jr. Fishing device. 3,397,478, 8–20–68, Cl. 43—42.14.
Lowry, Robert D.: *See*—
Harrison, John W., and Lowry. 3,397,773.
Lubinski, Siegfried W. L., to Die Volkswagenwerk Aktiengesellschaft. Automatic control for change-speed gears, especially for motor vehicles. 3,397,596, 8–20–68, Cl. 74—731.
Lucas, Joseph, (Industries) Ltd.: *See*—
Barnes, Stanley C., and Armstrong. 3,398,024.
Littlehales, Herbert J., and Birch. 3,397,843.
Ridley, Douglas F. 3,398,030.
Luckey, George W., and B. D. Illingsworth, to Eastman Kodak Co. Photographic emulsions containing mercapto development anti-foggants. 3,397,987, 8–20–68, Cl. 96—109.
Ludloff, Wolfgang, to Gesellschaft fur Multibitzgerate, Dr. Ing. D. A. Mannesmann m.b.H. Device for photographic exposure, preferably for enlargers. 3,397,612, 8–20–68, Cl. 88—24.
Luehrmann, William H., and W. H. Parker, to Teledyne Industries, Inc. Marine seismic array depth control. 3,398,394, 8–20–68, Cl. 340—7.
Luek, Otto W., and R. G. Young, to Sperry Rand Corp. Pickup guard mounting means. 3,397,527, 8–20–68, Cl. 56—364.
Lummus Co., The: *See*—
Tsao, Utah. 3,398,062.
Luther, Julius A. Sewing machine needle. 3,397,660, 8–20–68, Cl. 112—222.
Lyle, Aaron K., and C. W. Kulig, to Emhart Corp. Optical inspection apparatus for surface coatings on articles of glassware or the like wherein the articles are inspected in a liquid having the same index of refraction as the glass. 3,397,609, 8–20–68, Cl. 88—14.
Lynch, Charles T.: *See*—
Krochmal, Jerome J., Shapiro, and Lynch. 3,398,013.
Lyons, James E.: *See*—
Springer, Donald R., and Lyons. 3,397,888.
MB Associates: *See*—
Gould, Bert B. 3,397,638.
MacDonnell, Robert W., to Allied Filter Engineering, Inc. Pleated filter. 3,397,793, 8–20–68, Cl. 210—457.
Mackrle, Vladimir: *See*—
Mackrle, Svatopluk and V., Dracka, Halamek, Paseka, and Polasek. 3,398,089.
Mackrle, Svatopluk and V., O. Dracka, F. Halamek, L. Paseka, and P. Polasek, to Ceskoslovenska akademie ved. Method and apparatus for the biological processing of liquids. 3,398,089, 8–20–68, Cl. 210—7.
MacLean, Alexander F., and C. C. Hobbs, to Celanese Corp. Separation of formaldehyde from hydrogen peroxide by extractive distillation and subsequent formation of peracetic acid. 3,398,185, 8–20–68, Cl. 260—502.
Macpherson, Ian A.: *See*—
Inman, Eric R., Smith, and Macpherson. 3,398,153.

MacZura, George, and W. H. Gitzen, to Aluminum Co. of America. Production of fused alumina. 3,397,952, 8–20–68, Cl. 23—141.
Madlener, Paul, and O. Pecksen, to Industrie-Werke Karlsruhe Aktiengesellschaft. Release device for land mines. 3,397,635, 8–20–68, Cl. 102—8.
Magerlein, Helmut: *See*—
  Rupp, Hans-Dieter, Siggel, Meyer, and Magerlein. 3,397,960.
Mahler, Walter, to E. I. du Pont de Nemours and Co. Acids and salts in which the anion has a transition metal attached to one to three —S(CF₃)C=C(CF₃)S-groups. 3,398,167, 8–20–68, Cl. 260—429.
Mahoney, Ralph P., and I. J. Phillips, to Beloit Corp. Air knife coating pan. 3,937,673, 8–20–68, Cl. 118—63.
Mainguy, Donald N., ½ to J. S. Andrews. Amphibious vehicle. 3,397,668, 8–20–68, Cl. 115—1.
Mais, Ago: *See*—
  Miller, Eugene J., Jr., and Mais. 3,398,196.
  Miller, Eugene J., Jr., and Mais. 3,398,197.
Majzlin, Gregory. Intra-uterine contraceptive device. 3,397,690, 8–20–68, Cl. 128—130.
Majzlin, Gregory. Intra-uterine contraceptive device. 3,397,691, 8–20–68, Cl. 128—130.
Malaker Corp.: *See*—
  Daunt, John G. 3,397,738.
Malicheff, Andre: *See*—
  Brichard, Edgard, and Malicheff. 3,397,972.
Maller, Victor A. J.: *See*—
  Walker, Peter A., Maller, and Bonyhard. 3,398,299.
Maloney-Crawford Tank Corp.: *See*—
  Gravis, Charles K., III, Wood, and Selpp. 3,397,731.
Manowczak, Joseph S.: *See*—
  Avedissian, Michael K., and Manowczak. 3,397,451.
Mantus Metal Products Co., Inc.: *See*—
  Lingard, Harold A. 3,397,483.
Marantz, Daniel R.: *See*—
  Marantz, Israel H. and D. R. 3,397,736.
Marantz Industries Corp.: *See*—
  Marantz, Israel H. and D. R. 3,397,736.
Marantz, Israel H. and D. R., to Marantz Industries Corp. Apparatus for making thermoelectric elements. 3,397,736, 8–20–68, Cl. 164—267.
Marathon Oil Co.: *See*—
  Olson, Danford H. 3,398,203.
Marcantonio, Vittorio. Introducer sheath. 3,397,689, 8–20–68, Cl. 128—79.
Marconi Co. Ltd., The: *See*—
  Dwyer, Douglas F. G. 3,398,380.
  Mortley, Wilfrid S. 3,398,363.
Mariano, Frank: *See*—
  Celli, Aldo, and Mariano. 3,397,416.
Marinaccio, Frank A. Filtering device. 3,397,704, 8–20–68, Cl. 131—261.
Marine International, Inc.: *See*—
  Bush, James. 3,397,581.
Markel Electric Products, Inc.: *See*—
  Ortiz, Ralph G., and Grant. 3,398,263.
Markham, Aaron E.: *See*—
  Felicetta, Vincent F., and Markham. 3,398,005.
  Felicetta, Vincent F., and Markham. 3,398,006.
Marquardt Corp., The: *See*—
  Brueggemann, Harry P. 3,397,605.
  Frayne, John G., and Brueggemann. 3,397,936.
Marsh, Glenn A., to Union Oil Co. of California. Method and apparatus for measuring corrosion rate. 3,398,065, 8–20–68, Cl. 204—1.
Marshall, David J., to American Home Products Corp. 3β-substituted-4-pregnenes. 3,398,142, 8–20–68, Cl. 260—239.55.
Marshall, Robert S., and F. W. Clegg, to Novotec Research Ltd. Collapsible boat. 3,397,412, 8–20–68, Cl. 9—2.
Martel, Jacques, and C. Huynh, to Roussel-UCLAF. Saturated thiapyran-3-one-1,1-dioxides and their preparation. 3,398,160, 8–20–68, Cl. 260—327.
Martel, Robert W., and R. M. Ferguson, to Xerox Corp. Electrical charging utilizing a two-phased liquid medium. 3,398,336, 8–20–68, Cl. 317—262.
Martens, Vincent A., to Scovill Mfg. Co. Cordless electric iron. 3,398,260, 8–20–68, Cl. 219—247.
Martin, Michel: *See*—
  Champ, Roger, Martin, and Winand. 3,397,955.
Martin, Richard E.: *See*—
  De Lizasoain, Gabriel V., Martin, and Otano. 3,398,233.
Martinis Marchi Jellicich, Maria S., to Edwards High Vacuum International Ltd. Apparatus for lyophilization of substances containing an aqueous phase. 3,397,462, 8–20–68, Cl. 34—92.
Marumoto, Ryuji: *See*—
  Morita, Katsura, Oghial, and Marumoto. 3,398,149.
Maruta, Seiichi. Rock crushing apparatus. 3,397,916, 8–20–68, Cl. 299—37.
Maschinenfabrik Augsburg-Nurnberg Aktiengesellschaft: *See*—
  Schmidt, Werner, and Gunther. 3,397,910.
Maschinenfabrik Moenus A.G.: *See*—
  Keller, Hans-Otto. 3,397,415.
Maschinenfabrik Sack G.m.b.H.: *See*—
  Pahnke, Hans-Joachim. 3,397,568.
Mason, George W.: *See*—
  Badger, William C., and Mason. 3,397,836.
Mastriforte, Otil F., and J. H. Faulds, to Chandler Evans, Inc. Rotary shaft seal. 3,397,894, 8–20–68, Cl. 277—30.
Mattel, Inc.: *See*—
  Ryan, John W., Danielsen, and De Gelder. 3,397,484.
Maurel, Pierre J. P.: *See*—
  Jamey, Maurice A., Maurel, and Duhart. 3,397,951.
Maust, Frederick K., deceased (H. Maust, and J. Grill, administrators), to F. K. Maust. Method of continuously cleaning rolls in the processing of coil, sheet and plate material. 3,398,022, 8–20–68, Cl. 134—6.
Maust, Hedwig: *See*—
  Maust, Frederick K. 3,398,022.
  Maust, Frederick K. 3,398,022.
Mayer, Oscar, & Co., Inc.: *See*—
  Seiferth, Oscar E., and Austin. 3,397,775.
Mays, Durward W. Electrode-type steam bath steam generator. 3,398,261, 8–20–68, Cl. 219—285.
McCann, Gerald P., and M. Caton, McCann's Engineering & Mfg. Co. Carbonator tank. 3,397,870, 8–20–68, Cl. 261—19.
McCann's Engineering & Mfg. Co.: *See*—
  McCann, Gerald P., and Caton. 3,397,870.
McCarley, Herbert R.: *See*—
  Dooley, Jerry L., and McCarley. 3,398,341.
McClintic, Bruce F., and R. L. Hughes, to General Electric Co. Velocity limiter. 3,397,759, 8–20–68, Cl. 188—96.
McCloud, James R., to I-T-E Circuit Breaker Co. Elliptical tank structure for oil circuit breakers. 3,398,247, 8–20–68, Cl. 200—150.
McCormick, Joseph F., to I-T-E Circuit Breaker Co. Motor control for D-C motors with series field windings. 3,398,344, 8–20–68, Cl. 318—252.
McCrary, Edward R., and R. L. Quinlivan. Safety truck-wheel assembly. 3,397,728, 8–20–68, Cl. 152—158.
McCunn, Myron L.: *See*—
  Sanderson, Leon F., Hook, and McCunn. 3,397,522.
McDonald's System, Inc.: *See*—
  Strong, William K. 3,397,993.
McDonnell Aircraft Corp.: *See*—
  Wells, Wesley G. 3,397,600.
McDonnell Douglas Corp.: *See*—
  Banas, Henry C. 3,397,432.
McElroy, John F. Playhouse. 3,397,710, 8–20–68, Cl. 135—1.
McFarlane, James, to G.K.N. Somerset Wire Ltd. Apparatus for improving the tensile properties of wire. 3,398,258, 8–20–68, Cl. 219—155.
McGean, Thomas J., to Bell Telephone Laboratories, Inc. Coaxial cable forming apparatus. 3,397,442, 8–20–68, Cl. 29—202.5.
McGowan, Harold S., to Collins Radio Co. Quick return drive linkage. 3,397,585, 8–20–68, Cl. 74—75.
McGraw-Edison Co.: *See*—
  Anderson, David W. 3,398,323.
McKay Co., The: *See*—
  Foley, William R., Jr. 3,398,256.
  Wiehe, Albert E. 3,398,257.
McKee, Herbert A.: *See*—
  Bartell, Rudy, and McKee. 3,398,090.
McKibben, Charlton K.: *See*—
  Treharne, Richard W., and McKibben. 3,398,281.
McMullen, John J.: *See*—
  Basile, Norman K., Bridges, and Knight. 3,397,662.
McNeill, William A., and J. A. Davant, Jr., to McNeill Spinning Co., Inc. Method and apparatus for conveying yarn. 3,397,437, 8–20–68, Cl. 28—21.
McNeill Spinning Co., Inc.: *See*—
  McNeill, William A., and Davant. 3,397,437.
McNutt, Douglas P., to United States of America, Navy. Nutation damper assembly. 3,397,851, 8–20–68, Cl. 244—3.21.
McQuaid, Harry W.: *See*—
  Ulmer, William L., and McQuaid. 3,397,445.
Mead Johnson & Co.: *See*—
  Zygmunt, Walter A., and Browder. 3,398,056.
  Wu, Yao H. 3,398,151.
Medema, Dirk, to Shell Oil Co. PI-allyl palladium complex production. 3,398,168, 8–20–68, Cl. 260—429.
Medical and Electrical Instrumentation Co., Ltd.: *See*—
  Davies, Arthur G. 3,397,611.
Mednick, Sol A., to FMC Corp. Polymerization of allylic esters. 3,398,125, 8–20–68, Cl. 260—78.4.
Meier, Albert E., ½ to Muncie Newspapers, Inc. Preprinted newsprint web register device. 3,397,610, 8–20–68, Cl. 88—14.
Meier, Bernhard: *See*—
  Ehrhardt, Joachim, Hultzsch, Meier, and Söldner. 3,397,459.
Meinke, Wilbur E., to The New Britain Machine Co. Machine tool spindle clamping means. 3,397,614, 8–20–68, Cl. 90—11.
Meinke, Wilbur E., to The New Britain Machine Co. Tool arbor. 3,397,615, 8–20–68, Cl. 90—11.
Mellors, Geoffrey W., and S. Senderoff, to Union Carbide Corp. Novel compounds of tantalum and columbium and process for preparation. 3,398,068, 8–20–68, Cl. 204—61.
Melton, Elvin W.: *See*—
  Sanders, Warren M., and Melton. 3,398,288.
Melton, Roger W., to Continental Can Co., Inc. Easy opening closure for tapered containers. 3,397,803, 8–20–68, Cl. 215—95.
Merck & Co., Inc.: *See*—
  Chemerda, John M., Gal, and Sletzinger. 3,398,157.
  Schultz, Everett M. 3,398,188.
Merrick, Glenn O., G. L. Dafler, and R. C. Bodem, to General Motors Corp. Stator frame assembly and structure. 3,398,306, 8–20–68, Cl. 310—258.
Merrick, Lee: *See*—
  Hawley, Wilbur J., and Merrick. 3,397,826.
Mesmer, Robert E., to Monsanto Co. Polyposphate processes and products. 3,397,948, 8–20–68, Cl. 23—106.
Metal Box Co. Ltd., The: *See*—
  Wyard, Walter H., and Hill. 3,397,510.
Meyer, Gerhard: *See*—
  Rupp, Hans-Dieter, Siggel, Meyer, and Magerlein. 3,397,960.

Meyers, Joseph A., III., and E. G. Shay, to Atlantic Richfield Co. Ethylene oxide adducts of amino esters. 3,398,163, 8–20–68, Cl. 260—404.
Michalski, Raymond J., to Nalco Chemical Co. Pitch prevention by addition of ligand and organic sulfonate. 3,398,047, 8–20–68, Cl. 162—48.
Micko, Oswald: *See*—
  Allgaier, Oskar, and Micko. 3,397,781.
Microtherm Ltd.: *See*—
  Smith, Peter H. 3,397,817.
Mikus, Edward M. Grip plates for a revolver handle. 3,397,475, 8–20–68, Cl. 42—71.
Miller, Eugene J., Jr., and A. Mais, to Armour Industrial Chemical Co. N-secondary-alkyl trimethylene diamines. 3,398,196, 8–20–68, Cl. 260—583.
Miller, Eugene J., Jr., and A. Mais, to Armour Industrial Chemical Co. N-secondary-alkyl tertiary amine compounds. 3,398,197, 8–20–68, Cl. 260—584.
Miller, Marvin, to Sibany Mfg. Corp. Heat exchange apparatus. 3,397,739, 8–20–68, Cl. 165—86.
Millikan, Allan G., and A. H. Herz, to Eastman Kodak Co. Photographic emulsion stabilized with bis(p-acrylamidophenyl)disulfides. 3,397,986, 8–20–68, Cl. 96—109.
Millward, John D.: *See*—
  Baldwin, John L. E., and Millward. 3,398,235.
Milwaukee Chaplet & Mfg. Co., Inc.: *See*—
  Schipper, Pieter W. 3,397,872.
Milwaukee Cylinder Corp.: *See*—
  Skelton, Darold M., Schultz, and Bewalda. 3,397,620.
Mine Safety Appliances Co.: *See*—
  Plantz, Charles A. 3,397,966.
Miner, W. H., Inc.: *See*—
  Carlson, Robert L. 3,397,798.
Mini, Iti, to Montecatini Edison S.p.A. Horizontal table type filter elements with timing means. 3,397,787, 8–20–68, Cl. 210—139.
Minnesota Mining and Mfg. Co.: *See*—
  Bolstad, Archibald N., and Hoyt. 3,398,128.
  Guenthner, Richard A., and Lazerte. 3,398,182.
  Paldosh, Richard L. 3,398,237.
Missouri Meerschaum Co.: *See*—
  Otto, Carl J. 3,397,703.
Mitsubishi Jukogyo Kabushiki: *See*—
  Ito, Yukiaki. 3,397,663.
Mobil Oil Corp.: *See*—
  Blatz, Paul E., and Williams. 3,398,094.
  Geacintov, Cyril, Starr, and Toth. 3,398,073.
  Guernsey, Edwin O., and Smith. 3,398,075.
  Loper, George B. 3,397,755.
Modern Metal Products Co.: *See*—
  Beckman, Ernest C., and Anderson. 3,397,906.
Moegling, Eugen, to Babcock & Wilcox, Ltd. Refuse boiler in combination with a high pressure power station boiler. 3,397,677, 8–20–68, Cl. 122—2.
Moler, Richard W. Fish smoker. 3,397,632, 8–20–68, Cl. 99—259.
Mong, Raymond R.: *See*—
  Kaufman, Bruce F., Jr., and Mong. 3,398,222.
Monsanto Co.: *See*—
  Fields, Joseph E., and Johnson. 3,398,092.
  Griffith, Edward J. 3,397,949.
  Langguth, Robert P., and Vandersall. 3,398,019.
  Mesmer, Robert E. 3,397,948.
  Shaver, Kenneth J. 3,397,947.
Montecatini Edison S.p.A.: *See*—
  Mini, Iti. 3,397,787.
Montoro, Richard A., to Westinghouse Electric Corp. Control system for metallic strip gathering apparatus. 3,397,438, 8–20–68, Cl. 29—18.
Moore, Graham E., to Imperial Metal Industries (Kynoch) Ltd. Gear train assemblies. 3,397,589, 8–20–68, Cl. 74—397.
Morawski, London T., and J. J. Parker. Clamp. 3,397,879, 8–20–68, Cl. 269—91.
Mori, Tadamichi, and K. Tanabe, to Citizen Tokei Kabushiki Kaisha. Photographic light control means. 3,397,629, 8–20–68, Cl. 95—10.
Morita, Katsura, M. Oghial, and R. Marumoto, to Takeda Chemical Industries, Ltd. Process for preparing adenine. 3,398,149, 8–20–68, Cl. 260—252.
Morrell, John, & Co.: *See*—
  Myers, Donald W. 3,397,507.
Mortley, Wilfrid S., to The Marconi Co. Ltd. Equipment testing systems for visually indicating faults occurring at any of a number of testing points. 3,398,363, 8–20–68, Cl. 324—73.
Morton, George A., R. J. Pressley, and S. V. Forgue, to United States of America, Army. Infrared imaging device with photoconductive target. 3,398,316, 8–20–68, Cl. 315—10.
Mosbacher, Bruce H., and G. W. Nelson, to Roper Industries, Inc. Fluid pump or motor. 3,397,645, 8–20–68, Cl. 103—126.
Motorola, Inc.: *See*—
  Gerick, Edwin N. 3,397,641.
Moulden, Robert R., to Hi Pressure Soil Stabilizers, Inc. Method and apparatus for treating soils. 3,397,542, 8–20–68, Cl. 61—36.
Moulthrop, Homer A., to United States of America, Atomic Energy Commission. Method and apparatus for determining cooling age of nuclear reactor fuel. 3,398,280, 8–20–68, Cl. 250—83.3.
Mueller, Curt, to Sandoz Ltd. (also known as Sandoz AG). 2-cyano-4-nitro-6-halogeno-2-acylamino-4-dialkylamino-1,1-azobenzene dyes. 3,398,135, 8–20–68, Cl. 260—205.
Mueller, Curt, to Sandoz Ltd. (also known as Sandoz AG). 2-methylsulphonyl-4-nitro-2'-acylamino-4'-dialkylamino-1,1'-azobenzene dyes. 3,398,137, 8–20–68, Cl. 260—207.
Mueller, Curt: *See*—
  Groebke, Wolfgang, and Mueller. 3,398,136.
Muessig, Clifford W.: *See*—
  Rowe, Charles A., Jr., Muessig, and Yuhas. 3,398,107.
Muller, Erwin: *See*—
  Peter, Julius, and Muller. 3,398,042.
Muller, Franz, to Aktiengesellschaft Klockner-Humboldt-Deutz. Grinding mill plant. 3,397,845, 8–20–68, Cl. 241—43.
Muller, Johann, to Friedrich Deckel Prazisions Mechanik und Maschinenbau. Handwheel for machine tools and the like. 3,397,592, 8–20–68, Cl. 74—548.
Muller, Johann, to Friedrich Deckel Prazisions Mechanik und Maschinenbau. Milling machine. 3,397,616, 8–20–68, Cl. 90—18.
Muller, Marcel: *See*—
  Goldberg, Moses W., Lehr, and Muller. 3,398,180.
Muncie Newspapers, Inc.: *See*—
  Meier, Albert E. 3,397,610.
Murphy, David J., Jr.: *See*—
  Crowe, William P., and Murphy. 3,397,553.
Murphy, John J.: *See*—
  Batzer, Thomas H., Gunderson, and Murphy. 3,397,862.
Murphy, Timothy. Corner structure for lining walls and other surfaces. 3,397,498, 8–20–68, Cl. 52—385.
Myers, Donald W., to John Morrell & Co. Vacuum packaging apparatus. 3,397,507, 8–20–68, Cl. 53—112.
Nalco Chemical Co.: *See*—
  Buchanan, William T., and Hedenstad. 3,397,956.
  Michalski, Raymond J. 3,398,047.
Nash, Robert A., Jr. Supporting structure and ball releasably suspended therefrom. 3,397,885, 8–20–68, Cl. 273—26.
National Aeronautics & Space Administration: *See*—
  Webb, James E. 3,397,512.
National Can Corp.: *See*—
  Ganung, Robert B., and Huber. 3,397,824.
  Lipske, Benjamin B. 3,397,811.
National Cash Register Co., The: *See*—
  Stone, Eliot. 3,397,980.
National Mfg. Co.: *See*—
  Banse, George. 3,397,905.
National Rejectors, Inc.: *See*—
  Koch, Wilhelm. 3,398,303.
National Research Corp.: *See*—
  Allen, Lloyd R., and Steeves. 3,398,040.
  Harvey, Philip C. 3,397,579.
  Sheldon, Deane P. 3,398,331.
National Steel Corp.: *See*—
  Strassburger, Julius H. 3,397,877.
Natsume, Michitoshi. Liquid cup and container assembly usable as a binocular telescope. 3,397,935, 8–20–68, Cl. 350—71.
Navoy, Anthony J.: *See*—
  Newby, Glen A., and Navoy. 3,397,790.
Nelrotti, Guido, and E. Schmidt, to Reeves Industries, Inc. Method of lubricating a coated magnetic record member. 3,398,011, 8–20–68, Cl. 117—65.2.
Nelson, George W.: *See*—
  Mosbacher, Bruce H., and Nelson. 3,397,645.
Nelson, Kenneth W.: *See*—
  Darragh, Richard T., and Nelson. 3,397,996.
Nelson, Lee E., to Dow Corning Corp. Polymerization of silacyclobutanes. 3,398,178, 8–20–68, Cl. 260—448.2.
Neumann, Wilhelm P., and J. A. Pedain, to Studiengesellschaft Kohle m.b.H. Production of halogen containing organotin compounds. 3,398,169, 8–20–68, Cl. 260—429.7.
New Britain Machine Co., The: *See*—
  Meinke, Wilbur E. 3,397,614.
  Meinke, Wilbur E. 3,397,615.
Newby, Glen A., and A. J. Navoy, to Gulf General Atomic, Inc. Semipermeable membrane separation devices and methods of making the same. 3,397,790, 8–20–68, Cl. 210—321.
Newland, Allan B., to United Aircraft of Canada Ltd. Rear mount system for aircraft engines. 3,397,855, 8–20–68, Cl. 248—5.
Newton, Burton. Board game apparatus for simulating stock market operations. 3,397,890, 8–20–68, Cl. 273—135.
Nilsen, Anth. B., & Co. Ltd. A/S: *See*—
  Rövde, Björn O., and Stöeng. 3,397,424.
Nittel, Fritz: *See*—
  Keberle, Wolfgang; Himmelmann, Dieterich, Bayer, and Nittel. 3,397,989.
Nitzsche, Siegfried, M. Wick, and K. W. Wegehaupt, to Wacker-Chemie G.m.b.H. Stabilized linear siloxane polymers. 3,398,176, 8–20–68, Cl. 260—448.2.
Noble, Maurice: *See*—
  Perieres, René, and Noble. 3,397,958.
Noddin, Ray C., E. J. Bravley, and T. E. Swift, to Globe-Union, Inc. Magneto systems. 3,398,353, 8–20–68, Cl. 322—17.
Noll, Walter: *See*—
  Damm, Klaus, Steinbach, and Noll. 3,398,172.
Norac Co., Inc., The: *See*—
  Chetakian, Edward. 3,398,213.
North American Philips Co., Inc.: *See*—
  Kuntke, Alfred. 3,398,351.
North Electric Co.: *See*—
  Kuba, Richard E. 3,398,292.
Northrup, James W. Electrical operation of valves for internal combustion engines. 3,397,681, 8–20–68, Cl. 123—90.
Norz, Albert: *See*—
  Rupp, Heinrich, and Norz. 3,398,400.
Novel Ideas Inc.: *See*—
  Boese, Arthur H. 3,397,481.
Novotec Research Ltd.: *See*—
  Marshall, Robert S., and Clegg. 3,397,412.
Nowack, Rudolf: *See*—
  Kuhlkamp, Alfred, and Nowack. 3,398,103.
Noznick, Peter P., and C. W. Tatter, to Beatrice Foods Co. Lactalbumin and lactoglobulin free drink. 3,397,992, 8–20–68, Cl. 99—63.
O'Connell, William H. Signal device for worn tire treads. 3,398,397, 8–20–68, Cl. 340—52.
Odell Co., The: *See*—
  Odell, Horace B. 3,398,034.

Odell, Horace B., to The Odell Co. Process and machine for making adhesive strip products. 3,398,034, 8-20-68, Cl. 156—203.
Oghiai, Mighihiko: *See*—
Morita, Katsura, Oghiai, and Marumoto. 3,398,149.
Ogle, Robert W., to C.S.M. Corp. Combination syringe package, syringe and chamber. 3,397,694, 8-20-68, Cl. 128—272.
O'Hara, Arthur C., to Carrier Corp. Air conditioning units. 3,397,740, 8-20-68, Cl. 165—123.
Ohlsson, Bengt-Ake: *See*—
Jenssen, Sverre K., Ljungstrom, and Ohlsson. 3,397,742.
Okaya, Takuji: *See*—
Eguchi, Tamotsu, and Okaya. 3,398,074.
Okey, Robert W., to Dorr-Oliver Inc. Phosphorous removal in membrane waste water treatment. 3,398,088, 8-20-68, Cl. 210—3.
Okun Nathaniel N., to The Cello Chemical Co. Tool for floor treating machine. 3,397,419, 8-20-68, Cl. 15—49.
Oles, John S. Star bearing. 3,397,927, 8-20-68, Cl. 308—2.
Olin Mathieson Chemical Corp.: *See*—
Badali, Joseph A. 3,397,474.
Scott, John A. 3,398,028.
Olivetti, Ing C. & C. S.p.A.: *See*—
Gassino, Teresio, and Azzalin. 3,397,837.
Olson, Danford H., to Marathon Oil Co. Process for the preparation of fluorinated hydrocarbons. 3,398,203, 8-20-68, Cl. 260—653.3.
Olson, David G. Phase shift frequency dividers. 3,398,378. 8-20-68, Cl. 331—76.
Ondal G.m.b.H.: *See*—
Kieslich, Horst. 3,397,841.
Onion Tank Car Co., Corp.: *See*—
Duff, Joseph H., and Sorlente. 3,397,788.
Orosz, Steve J. Resilient retaining ring assembly. 3,397,727, 8-20-68, Cl. 151—69.
O'Rourke, William P.: *See*—
Klein, Gustave J., and O'Rourke. 3,398,110.
Orthell, Johannes, to Langen & Co. Hydraulic pressure accumulator. 3,397,719, 8-20-68, Cl. 138—30.
Ortiz, Ralph G., and C. Grant, to Markel Electric Products, Inc. High wall incandescent electric heater. 3,398,263, 8-20-68, Cl. 219—347.
Ostendorf, Bernard, Jr., to Bell Telephone Laboratories, Inc. Data processing circuit. 3,398,403, 8-20-68, Cl. 340—172.5.
Ostrander, Edgar A., and F. C. Velsor, Jr. Comparative value device. 3,397,838, 8-20-68, Cl. 235—70.
Ostrander, George W.: *See*—
Pendelton, Wesley W., and Ostrander. 3,398,004.
Oswald, Alexis A.: *See*—
Griesbaum, Karl, and Oswald. 3,398,200.
Otano, Hernan I.: *See*—
De Lizasoain, Gabriel V., Martin, and Otano. 3,398,233.
Otto, Carl J., to Missouri Meerschaum Co. Pipe with replaceable corn-cob inner bowl. 3,397,703, 8-20-68, Cl. 131—201.
Owens, Benjamin D.: *See*—
Owens, Carl W., and B. D. 3,397,745.
Owens, Carl W., and B. D., 30% to C. W. Owens, 30% to M. D. Hughes, 30% to V. Caskey, 5% to J. J. Baker, and 5% to J. Owens.. Vacuum-insulated steam-injection system for oil wells. 3,397,745, 8-20-68, Cl. 166—57.
Owens, Carl W.: *See*—
Owens, Benjamin D., and C. W. 3,397,745.
Owens, Eugene M. Signal routing control system. 3,398,240, 8-20-68, Cl. 179—1.
Owens-Illinois, Inc.: *See*—
Drennan, James G. 3,397,504.
Rough, Robert R. 3,397,973.
Owens, Jack: *See*—
Owens, Carl W., and B. 3,397,745.
Oxenrider, Bryce C., M. H. Litt, and F. M. Slavik, to Allied Chemical Corp. Novel polyesters derived from alpha-(p-acyloxyphenyl) cumic acids or derivatives thereof. 3,398,121, 8-20-68, Cl. 260—47.
Pacific Flush Tank Co.: *See*—
Valdespino, Joe M. 3,397,789.
Packaging Corp. of America: *See*—
Chamolin, Charles L. 3,397,833.
Page, Derrick J., to Westinghouse Electric Corp. Electroluminescent device. 3,398,311, 8-20-68, Cl. 313—108.
Page, Russell D.: *See*—
Denney, Omer F., and Page. 3,397,898.
Pagni, Georges L.: *See*—
Baronnier, Jean-Henri, and Pagni. 3,398,117.
Pagni, Georges L.: *See*—
Baronnier, Jean-Henri, and Pagni. 3,398,118.
Pahnke, Hans-Joachim, to Maschinenfabrik Sack G.m.b.H. Hydraulic forging press. 3,397,568, 8-20-68, Cl. 72—453.
Paldosh, Richard L., to Minnesota Mining and Mfg. Co. System for synchronizing a scanning electron beam with a rotating body. 3,398,237, 8-20-68, Cl. 178—7.7.
Pako Corp.: *See*—
Kallenberg, Karl J. 3,397,613.
Pallatz, Harold, to Industrial Instruments, Inc. High voltage metering system. 3,398,369, 8-20-68. Cl 324—119.
Palmer, Reed A., to Robertshaw Controls Co. Method for manufacturing a program member for a reading head. 3,398,-217, 8-20-68, Cl. 264—45.
Park, Donald M., deceased, by Mary S., to The Seeburg Corp. Sequential connection of speakers for moving sound source simulation or the like. 3,398,230, 8-20-68, Cl. 84—1.18.
Park, Mary S.: *See*—
Park, Donald M., and Mary S. 3,398,230.
Parke, Davis & Co.: *See*—
Creager, Paul, Jr., Blanford, and Harrower. 3,397,692.
Parker, James B.: *See*—
Grigor, James, Parker, and Currie. 3,398,162.
Parker, John J.: *See*—
Morawski, London T., and Parker. 3,397,879.
Parker, Pace Corp.: *See*—
Port, Morton I., and Schwartz. 3,398,220.
Parker, William H.: *See*—
Luehrmann, William H., and Parker. 3,398,394.
Parkes, Eric, and A. W. Lawrence, to Fordath Engineering Co. Ltd. Continuous process for the coating of particulate material with resin., 3,398,012, 8-20-68, Cl. 117—100.
Paseka, Lubomir: *See*—
Mackrle, Svatopluk, V., Dracka, Halamek, Paseka, and Polasek. 3,398,089.
Patzer, William A.: *See*—
Barnas, Louis A., Jr., Dokos, and Patzer. 3,397,456.
Patzke, Robert C.: *See*—
Bruning, John V., Patzke, Ghiselli, and Tregay. 3,397,-627.
Peacock, Peter J.: *See*—
Johnston, Edward J., and Peacock. 3,397,520.
Pearce, Thomas J., to Swift & Co. Method and apparatus for cleaning horizontal rotary filters of the tilting cell type. 3,397,783, 8-20-68, Cl. 210—77.
Pearl, Curtis F., to Electrovert, Inc. Cable tie with two metallic pawls. 3,397,430, 8-20-68, Cl. 24—16.
Pechiney-Compagnie de Produits Chimiques et Electrometallurgiques: *See*—
Bonfils, Rene, and Des Rochettes. 3,398,081.
Jamey, Maurice A., Maurel, and Dubart. 3,397,951.
Perleres, René, and Noble. 3,397,958.
Pecksen, Otto: *See*—
Madlener, Paul, and Pecksen. 3,397,635.
Pedain, Josef A.: *See*—
Neumann, Wilhelm P., and Pedain. 3,398,169.
Pelton, Clyde I., to The Taylor-Winfield Corp. Apparatus for expanding and forming tubular workpieces. 3,397,563, 8-20-68, Cl. 72—62.
Pendleton, Wesley W., and G. W. Ostrander, to Anaconda Wire and Cable Co. Glass composition, conductors and coils insulated therewith and method of making said composition. 3,398,004, 8-20-68, Cl. 106—48.
Pennsalt Chemicals Corp.: *See*—
Smolens, Harry G., and Sprout. 3,397,945.
Pepperell Mfg. Co.: *See*—
Spencer, Francis T. 3,398,224.
Peres, Robert L., to The Associated Octel Co., Ltd. Liquid metering systems. 3,397,576, 8-20-68, Cl. 73—200.
Perez, Rodolfo: *See*—
Valadez, Heliodoro, and Perez. 3,397,655.
Perleres, René, and M. Noble, to Pechiney-Compagnie de Produits Chimiques et Electrometallurgiques. Process for the production of purified aluminum nitride. 3,397,958, 8-20-68, Cl. 23—192.
Perkin-Elmer Corp., The: *See*—
Sachs, Harold L. 3,398,285.
Perry, Milton A.: *See*—
Duke, Roy B., Jr., and Perry. 3,398,166.
Perry, Norman L.: *See*—
Hecker, Arthur C., and Perry. 3,398,115.
Peter, Julius, and E. Muller, to Farbenfabriken Bayer. Leather laminates. 3,398,042, 8-20-68, Cl. 161—190.
Peters, Leo. Packaging device for butter patties. 3,398,000, 8-20-68, Cl. 99—179.
Peters, Wallace W., to Colgate-Palmolive Co. Pressurized container cap construction. 3,397,822, 8-20-68, Cl. 222—402 13.
Peterson, Carl E., to Eastern Tool & Mfg. Co. Plant stake. 3,397,485, 8-20-68, Cl. 47—47.
Petix, Philip J.: *See*—
Kelly, William A., and Petix. 3,398,219.
Petrick, Russell E., to Bretford Mfg., Inc. Hair dryer. 3,397,-464, 8-20-68, Cl. 34—99.
Petro-Tex Chemical Corp.: *See*—
Christmann, Harold F. 3,398,100.
Petrucci, Raymond M., and T. C. De Paola, to American Machine & Foundry Co. Metering pump. 3,397,642, 8-20-68, Cl. 103—38.
Petry, Edward J. Method of and apparatus for fabricating crystalline dielectrics having improved shear strength. 3,398,216, 8-20-68, Cl. 264—24.
Petterson, David L.: *See*—
Jordan, Merrill E., Burbine, Cole, and Petterson. 3,397,-961.
Pettitt, Walter G.: *See*—
Sibley, Henry C., and Pettitt. 3,398,401.
Pfeffer, Fritz. Transport system for passengers and goods. 3,397,649, 8-20-68, Cl. 104—28.
Pfizer, Chas., & Co., Inc.: *See*—
Hochstein, Francis A. 3,397,990.
Pfrehm, Raymond H., to Esso Research and Engineering Co. Unidirectional meter prover. 3,397,570, 8-20-68, Cl. 73—3.
Philadelphia Quartz Co.: *See*—
Schnurch, Roland, Koster, and Freyhold. 3,397,950.
Phillips, Irvin J.: *See*—
Mahoney, Ralph P., and Phillips. 3,397,673.
Phillips Petroleum Co.: *See*—
Bolen, Kenneth E., Larkin, and Wilson. 3,397,724.
Tooke, James W. 3,397,969.
Wilkins, Paul E. 3,397,825.
Phillips, Roy. Ignition apparatus. 3,397,683, 8-20-68, Cl. 123—148.
Phillipson, Alan, B. H. R. Spiller, R. Smith, and H. Chessman, to Decca Ltd. Embossing press for gramophone records. 3,397,425, 8-20-68, Cl. 18—5.3.
Piacenza, Ermanno: *See*—
Zannini, Enzo, Piacenza, and Fabbri. 3,398,057.
Piekarski, Leonard, ¼ each to I. B. Colins, V. Whitesides, T. A. Smith, and C. E. Isham. Electrical relay circuitry for magnetizing systems and the like. 3,398,328, 8-20-68, Cl. 317—123.

Piekarski, Leonard, ¼ each to I. B. Collins, V. Whitesides, T. A. Smith, and C. E. Isham. Magnetic proximity switch. 3,398,384, 8-20-68, Cl. 335—207.
Pierpont, Ralph E., L. L. Rice, R. L. Rollins, and G. E. Walters, to Sprague Electric Co. Electrical capacitors having insulated extended tabs. 3,398,339, 8-20-68, Cl. 317—260.
Pierpont, Ross Z.: *See*—
De Lizasoain, Gabriel V., Martin, and Otano. 3,398,233.
Pilkington Bros. Ltd.: *See*—
Hynd, William C. 3,397,976.
Pillersdorf, Arthur, L. P. Kuhn, and R. E. Bowman, to United States of America, Army. Ballistic recovery medium. 3,398,-007, 8-20-68, Cl. 106—128.
Pitkethly, Robert C.: *See*—
Holmes, Peter D., Pitkethly, and Thornhill. 3,398,084.
Plantz, Charles A., to Mine Safety Appliances Co. Ozone determination. 3,397,966, 8-20-68, Cl. 23—232.
Plapper, Jurgen: *See*—
Heyden, Rudi, and Plapper. 3,397,941.
Plueddemann, Edwin P., to Dow Corning Corp. Bonding of organic resins or rubbers to inorganic substances. 3,398,-044, 8-20-68, Cl. 161—193.
Plueddemann, Edwin P., and H. A. Clark, to Dow Corning Corp. Compositions comprising acryloxyalkylsilanes and unsaturated polyester resins. 3,398,210, 8-20-68, Cl. 260—827.
Plumpe, William H., Jr., to Biological Research, Inc. AC motor braking system using a full wave rectifier circuit. 3,398,434, 8-20-68, Cl. 318—212.
Polasek, Pavel: *See*—
Mackrle, Svatopluk, V., Dracka, Halamek, Paseka, and Polasek. 3,398,089.
Pollitzer, Ernest L.: *See*—
Bloch, Herman S., and Pollitzer. 3,398,131.
Pollock, Mark W., to Argus Chemical Corp. Light and heat stability of polyvinyl chloride resins. 3,398,114, 8-20-68, Cl. 260—45.75.
Poole, John S., to United States of America, Navy. Bistable command module. 3,398,330, 8-20-68, Cl. 317—148.5.
Porlein, Gerhard: *See*—
Fischer, Artur, and Porlein. 3,398,389.
Port, Morton I., and B. L. Schwartz, to Parker, Pace Corp. Process for converting a web of synthetic material into bulk yarns. 3,398,220, 8-20-68, Cl. 264—147.
Porter, Charles R., to L. R. Goodwin. Pressure fluid actuated clockwork winding mechanism. 3,397,758, 8-20-68, Cl. 185—40.
Poulin, Clyde J., and G. Rice, to United States of America, Navy. Corrosion inhibitors for aqueous perchloric acid. 3,398,031, 8-20-68, Cl. 149—109.
Power Monitors, Inc.: *See*—
Young, Glenn S., and Laudel. 3,398,368.
Pratt, James L., Jr., to GAF Corp. Diazotype copying apparatus. 3,397,630, 8-20-68, Cl. 95—75.
Prentice, Leon A., to Tektronix, Inc. Helical gear drive mechanism with anti-backlash means. 3,397,590, 8-20-68, Cl. 74—409.
Presray Corp., The: *See*—
Carlson, Edward R. 3,397,490.
Pressley, Robert J.: *See*—
Morton, George A., Pressley, and Forgue. 3,398,316.
Prestwood, Franklin H. Traveling wave tube test apparatus. 3,398,361, 8-20-68, Cl. 324—58.
Prichodjko, Alexander, A. Simianer, and H. Hipp, to Telefunken Patentverwertungs-G.m.b.H. Navigation system operating on the transit time principle. 3,398,268, 8-20-68, Cl. 235—150.27.
Procter & Gamble Co., The: *See*—
Darragh, Richard T., and Nelson. 3,397,996.
Japikse, Cornelis H. 3,397,997.
Produits Chimiques Pechiney-Saint-Gobain: *See*—
Champ, Roger, Martin, and Winand. 3,397,955.
Renault, Claude. 3,397,943.
Proen Products Co.: *See*—
Kersh, Ronald C. 3,397,541.
Progressive Products Co.: *See*—
Keranar, Paul W., and Taormina. 3,398,097.
Keranar, Paul W., and Taormina. 3,398,198.
Propst, Robert C., to United States of America, Atomic Energy Commission. Scanning coulometry method and apparatus. 3,398,064, 8-20-68, Cl. 204—1.
Pruner, Harold W.: *See*—
Elmerson, Amos M., and Pruner. 3,397,644.
Quaal, George J.: *See*—
Baurain, Thomas S., and Quaal. 3,398,017.
Quenzer, Karl: *See*—
Lochmann, Helmut, and Quenzer. 3,398,082.
Quinlivan, Robert L.: *See*—
McCrary, Edward R., and Quinlivan. 3,397,728.
Quinn, Edward J.: *See*—
Hindersinn, Raymond R., and Quinn. 3,398,120.
Rabas, Thomas J.: *See*—
Cane, Domenick, Katzor, and Rabas. 3,398,059.
Rabow, Gerald, to International Telephone and Telegraph Corp. Multilevel coded communication system employing frequency-expanding code conversion. 3,398,239, 8-20-68, Cl. 178—66.
Radio Corp. of America: *See*—
Baun, Leonard J. 3,398,298.
Bazin, Lucas J. 3,398,318.
Hatke, Fred L., and Gray. 3,398,275.
Hursh, Neal W. 3,398,320.
Lemke, Eugene, and Hursh. 3,398,319.
Yu, Edwin K. C. 3,398,300.
Radson Engineering Corp.: *See*—
Fathauer, George H. 3,397,715.
Fathauer, George H. 3,398,295.
Raffalovich, Aubrey J., to United States of America, Army. Method of making thin film capacitor. 3,398,067, 8-20-68, Cl. 204—37.
Ramos, Thomas. Diglycidyl ethers of polyhydric alcohols with diamines or hydroquinones and 1,4-cyclohexadiene dioxide. 3,398,211, 8-20-68, Cl. 260—830.
Randall, Dwight L. Electro-optical altimeter. 3,398,277, 8-20-68, Cl. 250—43.5.
Randall, Walter H., to Keyes Fibre Co. Plural article molding machine. 3,398,049, 8-20-68, Cl. 162—390.
Rank-Bush Murphy, Ltd.: *See*—
Baldwin, John L. E., and Millward. 3,398,235.
Rauche, Rene: *See*—
Delalgue, Serge, and Rauche. 3,398,402.
Rauland Corp., The: *See*—
Kaplan, Sam H. 3,398,309.
Reber, Walter: *See*—
Spalinger, Hans, and Reber. 3,397,766.
Redman, Derek H., to Hancock & Co. (Engineers) Ltd. Automatic burner height control circuit. 3,398,342, 8-20-68, Cl. 318—18.
Redmond, John A.: *See*—
Bock, Ashley P., Henry, and Redmond. 3,398,252.
Reeves Industries, Inc.: *See*—
Neirotti, Guido, and Schmidt. 3,398,011.
Regester, Richard F., to Fansteel Metallurgical Corp. Process for incorporating aluminum into dispersion-modified metals. 3,397,979, 8-20-68, Cl. 75—206.
Reich, Kurt: *See*—
Cast, Adolf, and Reich. 3,397,617.
Reich, Karl M., Maschinenfabrik: *See*—
Cast, Adolf, and Reich. 3,397,617.
Reichmuth, Donald R., to Continental Oil Co. Asymmetric three-cone rock bit. 3,397,751, 8-20-68, Cl. 175—341.
Rein, Walter, E. Siggel, and H.-M. Koepp, to Vereinigte Glanzstoff-Fabriken AG. Process for the production of polyethylene terephthalate. 3,398,124, 8-20-68, Cl. 260—75.
Reinforced Plastic Container Corp.: *See*—
Wilkins, William B. 3,397,829.
Reinhart, Karl: *See*—
Leibner, Franz, Reinhart, and Semmler. 3,398,052.
Reiter, Daniel I. Cover device for end of handbag handle or the like. 3,397,725, 8-20-68, Cl. 150—33.
Renault, Claude, to Compagnie de Saint-Gobain. Antifelting process for keratinous materials. 3,397,942, 8-20-68, Cl. 8—127.6.
Renault, Claude, to Produits Chimiques Pechiney Saint-Gobain. Treatment of keratinous materials. 3,397,943, 8-20-68, Cl. 8—127.6.
Republic Steel Corp.: *See*—
Kornick, John B., and Broestl. 3,397,626.
Research Corp.: *See*—
Daunt, John G. 3,397,549.
Haddadin, Makhluf J., and Issidorides. 3,398,141.
Research-Cottrell, Inc.: *See*—
Johnson, Robert R. 3,397,515.
Reuther, Richard. Parallel bars and cable support therefor. 3,398,882, 8-20-68, Cl. 272—63.
Rex, Charles H., and M. L. Brom, to General Electric Co. Luminaire with optical refracting members. 3,398,273, 8-20-68, Cl. 240—93.
Rex, Charles H., to General Electric Co. Optically round, mechanically ovate reflector with radially stepped sections. 3,398,274, 8-20-68, Cl. 240—103.
Rexall Drug and Chemical Co.: *See*—
Leibson, Irving, and Bingeman. 3,398,129.
Rey, Daniel. Package for small slab-like articles. 3,397,818, 8-20-68, Cl. 221—232.
Revie, Walter. Aircraft of large wing span. 3,397,854, 8-20-68, Cl. 244—55.
Reynolds Metal Co.: *See*—
Farquhar, Melville T. 3,397,772.
Hockett, Gorwin G. 3,397,866.
Simpson, Eric, Jr. 3,397,502.
Waring, James C. 3,397,494.
Watts, Richard M. 3,397,796.
Rhone-Poulenc S.A.: *See*—
Baronnier, Jean-Henri, and Pagni. 3,398,117.
Baronnier, Jean-Henri, and Pagni. 3,398,118.
Rice, George: *See*—
Poulin, Clyde J., and Rice. 3,398,031.
Rice, Livingston L.: *See*—
Pierpont, Ralph E., Rice, Rollins, and Walters. 3,398,339.
Rich, Anthony J., to Rich Engineering Inc. Method of making an ornamental faceplate. 3,397,441, 8-20-68, Cl. 29—160.
Rich Engineering Inc.: *See*—
Rich, Anthony J. 3,397,441.
Richardson, William B., Sr. Fluid sustained vehicle. 3,397,-853, 8-20-68, Cl. 244—23.
Richardson, William F., to Flex-O-Lators, Inc. Listing material for upholstered furniture. 3,397,914, 8-20-68, Cl. 297—456.
Richmond, Kenneth D., to Dayco Corp. Method and apparatus for manufacturing transmission belts. 3,398,218, 8-20-68, Cl. 264—45.
Richter, Sidney B., and A. Levin, to Velsicol Chemical Corp. Method of destroying undesirable plants. 3,397,977, 8-20-68, Cl. 71—112.
Richter, Sidney B., and A. A. Levin, to Velsicol Chemical Corp. Method of destroying undesirable plants. 3,397,978, 8-20-68, Cl. 71—112.
Rickard, Charlotte I., to Kimberly-Clark Corp. Sanitary panty having a gathered crotch portion. 3,397,696, 8-20-68, Cl. 128—288.
Rickard, Charlotte I., to Kimberly-Clark Corp. Disposable sanitary shield for undergarments. 3,397,697, 8-20-68, Cl. 128—288.
Ridley, Douglas F., to Joseph Lucas (Industries) Ltd. Forming a semiconductor device by diffusing. 3,398,030, 8-20-68, Cl. 148—187.
Rietsch, Eberhard, to Theodor Wuppermann, Gesellschaft mit beschrankter haftung. Method and apparatus for electric resistance flash welding. 3,398,254, 8-20-68, Cl. 219—97.

Riggan, Homer D. Apparatus for exhaust gas separation. 3,397,682, 8–20–68, Cl. 123—119.
Ritchie, Charles I., and J. A. Karpac, to Bangor Punta Operations, Inc. Fluid bed furnace and the like. 3,397,873, 8–20–68, Cl. 263—21.
Rittenbach, Otto E., to United States of America, Army. Spectrum analyzer having means for comparing the frequency components of a complex signal with a variable reference signal. 3,398,364, 8–20–68, Cl. 324—77.
Ritter, Josef, and H. Gott, to AVI Alpenlandische Veredelungs-Industrie Gesellschaft m.b.H. Apparatus for supplying bendable strip material. 3,397,565, 8–20–68, Cl. 72—129.
Roach, Francis S. Locking differential. 3,397,595, 8–20–68, Cl. 74—710.5.
Roberson, Raymond F., to International Harvester Co. Direct connected implement carrier. 3,397,747, 8–20–68, Cl. 172—467.
Robertshaw-Controls Co.: *See*—
  Beck, Roland D. 3,398,346.
  Palmer, Reed A. 3,398,217.
Robins, David W., and W. E. Ely, to The B. F. Goodrich Co. Segmented friction member. 3,397,760, 8–20–68, Cl. 192—107.
Robins, Seymour. Smoke cooling cigar and tip assembly. 3,397,701, 8–20–68, Cl. 131—10.
Robinson, Glen P., Jr.: *See*—
  Allen, Grant E., Jr., Robinson, and Inman. 3,397,506.
Roden, Robert B., to Texas Instruments Inc. Ambient seismic noise elimination using horizontal component energy. 3,397,754, 8–20–68, Cl. 181—.5.
Roesky, Herbert W., to E. I. du Pont de Nemours and Co. Dithiobis (phosphonothioic difluoride),$P_2S_4F_4$, and its method of preparation. 3,397,967, 8–20–68, Cl. 23—357.
Rogers, Kenneth A., to General Motors Corp. Method of sealing the peripheral edge of a flat pleated filter panel and the filter formed thereby. 3,397,518, 8–20–68, Cl. 55—497.
Rogier, Edgar R., to General Mills, Inc. Polyamides of 1,4-bis(β-aminoethyl)benzene and fractionated polymeric fat acids. 3,398,164, 8–20–68, Cl. 260—404.5.
Rohm & Haas Co.: *See*—
  Wilson, Harold F., and Skiles. 3,398,189.
Rohowetz, Stanley E., to American Can Co. Container with tape opening device. 3,397,810, 8–20–68, Cl. 220—53.
Rollins, Richard L.: *See*—
  Pierpont, Ralph E., Rice, Rollins, and Walters. 3,398,-339.
Rolls-Royce Ltd.: *See*—
  Catlow, Ronald, Shaw, and Hart. 3,397,865.
  Davies, David O., Barnes, and Burrows. 3,397,536.
Ropas, Albert. Curtain suspending mechanism. 3,397,797, 8–20–68, Cl. 211—103.
Roper, Alec N., and E. G. Barber, to Shell Oil Co. Expandable poly(vinylaromatic) compositions and process of making same. 3,398,105, 8–20–68, Cl. 260—2.5.
Roper, Alex N., and H. G. Scott, to Shell Oil Co. Process for production of polymers of monovinyl-aromatic compounds and polybutadiene. 3,398,214, 8–20–68, Cl. 260—876.
Roper Industries, Inc.: *See*—
  Mosbacher, Bruce H., and Nelson. 3,397,645.
Rosen, Leonard B., and M. Green, to L. B. Rosen, and M. G. Mahwah. Woodsman's match holder. 3,397,769, 8–20–68, Cl. 206—20.
Rosenwald, Robert H., and P. Urban, to Universal Oil Products Co. Process for treating hydrocarbon distillates containing mercaptan and color-forming components. 3,398,-086, 8–20–68, Cl. 208—206.
Ross, Marcus E.: *See*—
  Johnson, Wendell L., and Ross. 3,398,112.
Rossi, Guido, to Generaay-Generale Radiologica S.p.A. Patient-supporting device for radiological treatments. 3,397,-411, 8–20–68, Cl. 5—66.
Rothfeld, Otto, and B. Dasch. Air filter. 3,397,514, 8–20–68, Cl. 55—233.
Rough, Robert R., to Owens-Illinois, Inc. Bubbler apparatus for a glass melting furnace. 3,397,973, 8–20–68, Cl. 65—134.
Roussel-Uclaf: *See*—
  Martel, Jacques, and Huynh. 3,398,160.
Rövde, Björn O., and G. Stöeng, to Anth. B. Nilsen & Co. Ltd. A/S. Press for pressing of fibre materials such as dried wood pulp, cellulose, etc. 3,397,424, 8–20–68, Cl. 18—2.
Rowe, Charles A., Jr., C. W. Muessig, and S. A. Yuhas, to Esso Research and Engineering Co. Modified xylene-formaldehyde resins. 3,398,107, 8–20–68, Cl. 260—19.
Rubbermaid Inc.: *See*—
  Berend, Peter M. 3,397,805.
Rudolph, Gerald A.: *See*—
  Howard, Charles S., and Rudolph. 3,397,770.
Ruff, Donald O., to General Motors Corp. Direct current commutation system for brushless electric motors. 3,398,-350, 8–20–68, Cl. 321—5.
Rupp, Hans-Dieter, E. Siggel, G. Meyer, and H. Magerlein, to Glanzstoff AG. Conversion of trithane into carbon disulfide. 3,397,960, 8–20–68, Cl. 23—206.
Rupp, Heinrich, and A. Norz, to International Standard Electric Corp. Method and arrangement for transmitting and receiving data without errors. 3,398,400, 8–20–68, Cl. 340—146.1.
Russell, Joseph L., and J. B. Feder, to Halcon International, Inc. Process for dehydrating boric acid. 3,397,954, 8–20–68, Cl. 23—149.
Russell, William F.: *See*—
  Karsten, Kenneth S., and Russell. 3,398,181.
Ryan, John W., B. E. Danielsen, and J. De Gelder, to Mattel, Inc. Sound and optical effects toy. 3,397,484, 8–20–68, Cl. 46—175.
Rye, John K., to F. Jos. Lamb Co., Inc. Grinding machine with electric discharge machining mechanism for reshaping crush roll. 3,398,253, 8–20–68, Cl. 219—69.
Sachs, Harold L., to The Perkin-Elmer Corp. Spectro-radiometer with means for eliminating background noise. 3,398,-285, 8–20–68, Cl. 250—217.
Sah, Chih-Tang: *See*—
  Bittmann, Charles A., and Sah. 3,397,450.
Saint-Jacques, Eugene C. Device for the automatic distribution of a stream of powdered or granular material and its application to a high-output loading plant in which sampling is effected either continuously or at regular intervals. 3,397,762, 8–20–68, Cl. 193—21.
Sakamoto, Saburo. Battery holding arrangement for a lamp. 3,398,271, 8–20–68, Cl. 240—10.63.
Salna, Karl, to International Harvester Co. Articulated frame steer tractor. 3,397,752, 8–20–68, Cl. 180—51.
Samuels, Donald W. Needle cooling device. 3,397,659, 8–20–68, Cl. 112—218.
Sanders, Warren M., and E. W. Melton, to United States of America, Air Force. Velocity selector using light conducting rods and a plurality of light beam interrupters. 3,398,288, 8–20–68, Cl. 250—222.
Sanderson, Leon F., R. W. Hook, and M. L. McCunn, to Deere & Co. Cotton harvester. 3,397,522, 8–20–68, Cl. 56—30.
Sandoz Ltd.: *See*—
  Mueller, Curt. 3,398,135.
  Mueller, Curt. 3,398,137.
  Groebke, Wolfgang, and Mueller. 3,398,136.
Sarati, Luigi, and G. Imbrighi, to Societa Italina Telecomunicazioni Siemens S.p.A. Digital logic information signal distributor for multichannel telecommunication systems which pass only one signal at a time. 3,398,296, 8–20–68, Cl. 307—207.
Saussele, Charles W., to Holley Carburetor Co. Axial proportional loading device with overload protection. 3,397,587, 8–20–68, Cl. 74—200.
Scaramucci, Domer. Valve seat with backing. 3,397,861, 8–20–68, Cl. 251—175.
Scarnato, Thomas J., R. Sorensen, J. J. Dryan, and C. M. Lawler, to International Harvester Co. Forage blower mounting structure. 3,397,923, 8–20–68, Cl. 302—37.
Schatz, Gunther, H. Gemeinhardt, H. Brucher, and O. Jurisch, to Glanzstoff A.G. Process for production of crimped filaments. 3,398,223, 8–20–68, Cl. 264—282.
Scherenberg, Hans O., to Daimler-Benz Aktiengesellschaft. Process and apparatus for facilitating the starting of diesel engines and the like. 3,397,684, 8–20–68, Cl. 123—179.
Scherzinger, Mark N.: *See*—
  Fogt, Thomas H., and Scherzinger. 3,397,461.
Schieser, Warren J.: *See*—
  Currie, Grover C., Jr., and Schieser. 3,397,624.
Schipper, Pieter W., to Milwaukee Chaplet & Mfg. Co., Inc. Cascade trays for an evaporator and a method of filling such trays. 3,397,872, 8–20–68, Cl. 261—110.
Schlank, Lionel I., to Keystone Brass & Rubber Co., Inc. Tank discharge valve. 3,397,409, 8–20–68, Cl. 4—57.
Schlein, Seymour N., to The Fanner Mfg. Co. Vibration damping line suspension apparatus. 3,397,857, 8–20–68, Cl. 248—63.
Schiernitzauer, Edward A., to Swift & Co. Method for dispensing and mixing measured amounts of liquid. 3,397,868, 8–20–68, Cl. 259—8.
Schmidgall, Carl H.: *See*—
  Archdale, John H., and Schmidgall. 3,397,903.
Schmidt, Edward: *See*—
  Nelrotti, Guido, and Schmidt. 3,398,011.
Schmidt, Werner, and H. Gunther, to Maschinenfabrik Augsburg-Nurnberg Aktiengesellschaft. Lock for tiltable cab. 3,397,910, 8–20–68, Cl. 296—35.
Schnalke, Karl-Erwin: *See*—
  Suling, Carlhans, and Schnalke. 3,398,127.
Schneider, Abraham: *See*—
  Duling, Iri N., and Schneider. 3,398,165.
Schneider, Michael. Sewer snake. 3,397,420, 8–20–68, Cl. 15—104.3.
Schneider, Wolfgang, to The B. F. Goodrich Co. Preparation of trans-1,4-dienes. 3,398,209, 8–20–68, Cl. 260—680.
Schnurch, Roland, A. Koster, and H. V. Freyhold, to Philadelphia Quartz Co. Process for preparing solutions for television screens. 3,397,950, 8–20–68, Cl. 23—110.
Scholz, Heinrich: *See*—
  Strohmeyer, Max, Hiller, Scholz, and Kindler. 3,398,206.
Scholz, Walter, to Linde Aktiengesellschaft Wiesbaden. Process and apparatus for the production of ammonia. 3,397,959, 8–20–68, Cl. 23—199.
Schorr, Manfred, W. Durckheimer, and G. Lammler, to Farbwerke Hoechst Aktiengesellschaft vormals Meister Lucius & Bruning. Tetrahydro-1,3,5-thiadiazine-2-thiones. 3,398,-146, 8–20–68, Cl. 260—243.
Schrader, Clarence O., to Technicolor Corp. of America. Stop-frame mechanism for a motion picture projector. 3,397,937, 8–20–68, Cl. 352—169.
Schroeder, Otto. Expanding pipes. 3,397,564, 8–20–68, Cl. 72—113.
Schubert, Johannes, to Bolkow Gesellschaft mit beschrankter Haftung. Solid fuel rocket with separate firing rate charge portions. 3,397,539, 8–20–68, Cl. 60—250.
Schultz, Everett M., to Merck & Co., Inc. [4-(2-haloalkanoyl) phenoxy] and [4-(2-haloalkanoyl)phenylmercapto]-alkanoic acids. 3,398,188, 8–20–68, Cl. 260—521.
Schultze, Harold E., to General Motors Corp. Combination spring and shock absorbing suspension unit. 3,397,897, 8–20–68, Cl. 280—124.
Schultz, John E.: *See*—
  Skelton, Darold M., Schultz, and Bewalda. 3,397,620.
Schumann, Kurt: *See*—
  Klemm, Rudolf, Wagner, Ehrentraut, Hempel, and Schumann. 3,398,039.

Schwartz, Bernard L.: *See*—
  Port, Morton I., and Schwartz. 3,398,220.
Schwartz, Nelson N., to FMC Corp. Production of humic acid. 3,398,186, 8–20–68, Cl. 260—515.
Scientific-Atlanta, Inc.: *See*—
  Allen, Grant E., Jr., Robinson, and Inman. 3,397,506.
Scobee, Robert R., to United States of America, Army. Hybrid rocket motor having turbulator-mixer apparatus. 3,397,540, 8–20–68, Cl. 60—251.
Scott, Henry G.: *See*—
  Roper, Alex N., and Scott. 3,398,214.
Scott, John A., to Olin Mathieson Chemical Corp. Process of forming a red, cuprous oxide coating on copper. 3,398,028, 8–20–68, Cl. 148—6.31.
Scovill Mfg. Co.: *See*—
  Martens, Vincent A. 3,398,260.
Seeburg Corp., The: *See*—
  Park, Donald M. 3,398,230.
Seiferth, Oscar E., and G. M. Austin, to Oscar Mayer & Co., Inc. Clip and seal package. 3,397,775, 8–20–68, Cl. 206—46.
Seipp, George F.: *See*—
  Gravis, Charles K., III, Wood, and Seipp. 3,397,731.
Seltorp, Jonas L. Heterogeneous atomic reactor. 3,398,051, 8–20–68, Cl. 176—45.
Semmler, Jurgen: *See*—
  Jeltner, Franz, Reinhart, and Semmler. 3,398,052.
Senderoff, Seymour: *See*—
  Mellors, Geoffrey W., and Senderoff. 3,398,068.
Serrell, John J. Apparatus for the application of centrifugal force. 3,397,792, 8–20–68, Cl. 210—370.
Seybold, René. Action for keyboard instruments. 3,397,604, 8–20–68, Cl. 84—258.
Shaffer, Howard R., to I-T-E Circuit Breaker Co. Solid state overload protection circuit. 3,398,325, 8–20–68, Cl. 317—31.
Shahmoon Industries, Inc.: *See*—
  Taccone, Russell W. 3,397,735.
Shapiro, Isadore: *See*—
  Krochmal, Jerome J., Shapiro, and Lynch. 3,398,013.
Sharp, Donald J., to Western Electric Co., Inc. Thin film capacitors employing semiconductive oxide electrolytes. 3,397,446, 8–20–68, Cl. 29—570.
Shaver, Kenneth J., to Monsanto Co. Stabilized polyphosphate products. 3,397,947, 8–20–68, Cl. 23—106.
Shaw, Herbert S., deceased, by S. L. Shaw, administratrix. Conveyor memory system. 3,397,800, 8–20–68, Cl. 214—11.
Shaw, Peter A.: *See*—
  Catlow, Ronald, Shaw, and Hart. 3,397,865.
Shaw, Sophie L.: *See*—
  Shaw, Herbert S. 3,397,800.
Shay, Edward G.: *See*—
  Meyers, Joseph A., III, and Shay. 3,398,163.
Shea, Yale R., and J. S. Hickman, to Inland Steel Products Co. Deck system. 3,397,497, 8–20–68, Cl. 52—334.
Sheldon, Deane P., to National Research Corp. Relay circuit for vacuum system control with pentode tube means. 3,398,-331, 8–20–68, Cl. 317—149.
Shell Oil Co.: *See*—
  Bellin, Richard H. 3,398,225.
  Boor, John, Jr. 3,398,130.
  Judd, Clark W. 3,398,095.
  Medema, Dirk. 3,398,168.
  Roper, Alec N., and Barber. 3,398,105.
  Roper, Alex N., and Scott. 3,398,214.
  Van Der Minne, Johan L., and Hermanie. 3,397,971.
Shepard, Alvin F., and B. F. Dannels, to Hooker Chemical Corp. Phenolic condensates. 3,398,122, 8–20–68, Cl. 260—50.
Shepherd, W. Don: *See*—
  Jones, Burton B. 3,397,686.
Sherliker, Francis R.: *See*—
  Fowler, John L., and Sherliker. 3,398,046.
Sherman, Garry: *See*—
  Sherman, Lawrence and G. 3,398,221.
Sherman, Lawrence and G. Method of producing shoe inserts. 3,398,221, 8–20–68, Cl. 264—223.
Shibata, Hiroshi, to Kureha Kagaku Kogyo Kabushiki Kaisha. Mercury-cathode chlorine cells. 3,398,070, 8–20–68, Cl. 204—99.
Shima, Kazuhiro: *See*—
  Yamamoto, Ryuichi, and Shima. 3,398,226.
Shockley, William, to International Telephone and Telegraph Corp. Semiconductor device having regions of different conductivity types wherein current is carried by the same type of carrier in all said regions. 3,398,334, 8–20–68, Cl. 317—234.
Shoulders, Kenneth R., to Stanford Research Institute. Information storage tube. 3,398,317, 8–20–68, Cl. 315—12.
Sibany Mfg. Corp.: *See*—
  Miller, Marvin. 3,397,739.
Sibley, Henry C., and W. G. Pettitt, to The General Signal Corp. Code communication system. 3,398,401, 8–20–68, Cl. 340—147.
Siebert, Hans. Apparatus for indicating the filled state in liquid gas cylinders. 3,397,577, 8–20–68, Cl. 73—309.
Siebold, Donald J., to General Electric Co. Device for mounting and electrically isolating components of a television receiver. 3,398,238, 8–20–68, Cl. 178—7.8.
Siemens Aktiengesellschaft: *See*—
  Groschwitz, Eberhard. 3,398,294.
  Grünwald, Erich. 3,398,385.
  Huber, Gerald, Knodler, and Kropfl. 3,398,053.
Siggel, Erhard: *See*—
  Rupp, Hans-Dieter, Siggel, Meyer, and Magerlein. 3,397,-960.
  Rein, Walter, Siggel, and Koepp. 3,398,124.
Simianer, Albert: *See*—
  Prichodjko, Alexander, Simianer, and Hipp. 3,398,268.
Simjian, Luther G. Article delivery system. 3,397,764, 8–20–68, Cl. 194—4.
Simons, Edward W., to Dualjet Corp. Air curtain using ionized air. 3,397,631, 8–20–68, Cl. 98—36.
Simpson, Eric, Jr., to Reynolds Metals Co. Composite truss structure. 3,397,502, 8–20–68, Cl. 52—693.
Sims, Stuart D., and R. T. Daly, to Control Data Corp. Laser device with total internal reflection propagation direction selection. 3,398,379, 8–20–68, Cl. 331—94.5.
Singer Co., The: *See*—
  Wu, William I. L., and Giangarra. 3,398,372.
  Zocher, Josef. 3,397,436.
Singh, Kartar: *See*—
  Vezina, Claude, and Singh. 3,398,054.
Shelton, Darold M., J. E. Schultz, and R. A. Bewalda, Jr., to Milwaukee Cylinder Corp. Fluid actuator with annular piston locking means. 3,397,620, 8–20–68, Cl. 92—24.
Skiles, Robert L.: *See*—
  Wilson, Harold F., and Skiles. 3,398,189.
Skousgaard, E. Chris. Water closet. 3,397,408, 8–20–68, Cl. 4—26.
Skrypa, Michael J., to Allied Chemical Corp. Propylene oxide-butadiene monoxide copolymers cross-linked with maleic anhydride. 3,398,126, 8–20–68, Cl. 260—78.5.
Slager, John J., and W. C. Webster, to Hydronautics, Inc. Vessel stabilizer. 3,397,664, 8–20–68, Cl. 114—124.
Slamar, Frank: *See*—
  Dykeman, George, and Slamar. 3,397,672.
Slavik, Ferdinand M.: *See*—
  Oxenrider, Bryce C., Litt, and Slavik. 3,398,121.
Sletzinger, Meyer: *See*—
  Chemerda, John M., Gal, and Sletzinger. 3,398,157.
Sloan, Cephas H., and B. J. Sublett, to Eastman Kodak Co. Filter elements and additive containing material therefor. 3,397,705, 8–20–68, Cl. 131—266.
Small, Fred, and R. Ward, to Gullick Ltd. Longwall mining machine having automatic means to maintain angular setting. 3,397,915, 8–20–68, Cl. 299—1.
Smith, Alan B.: *See*—
  Jones, Richard V., and Smith. 3,398,382.
  Jones, Richard V., and Smith. 3,398,383.
Smith, Albert R. Stone applicator. 3,397,674, 8–20–68, Cl. 118—200.
Smith, Daniel L. Container with pop-up spout. 3,397,820, 8–20–68, Cl. 222—83.
Smith, Hugh M.: *See*—
  Inman, Eric R., Smith, and Macpherson. 3,398,153.
Smith, Joseph A. Coin operated lock. 3,397,765, 8–20–68, Cl. 194—59.
Smith, Peter H., to Microtherm Ltd. Dispensing apparatus with heating chamber. 3,397,817, 8–20–68, Cl. 221—150.
Smith, Richard A., to American Machine & Foundry Co. Bowling pin with wood core and fabric reinforced resin cover. 3,397,889, 8–20–68, Cl. 273—82.
Smith, Robin: *See*—
  Phillipson, Alan, Spiller, Smith, and Cheesman. 3,397,-425.
Smith, T. A.: *See*—
  Piekarski, Leonard. 3,398,328.
  Piekarski, Leonard. 3,398,384.
Smith, T. J., & Nephew Ltd.: *See*—
  Drain, David J. 3,398,187.
Smith, Verle C., and J. H. Carpenter. Silver polish-tarnish retarder containing a dialkyl disulfide having from 8 to 20 carbon atoms in each alkyl radical. 3,398,003, 8–20–68, Cl. 106—3.
Smith, William E.: *See*—
  Guernsey, Edwin O., and Smith. 3,398,075.
Smithson, George R., and J. E. Hanway, Jr., to Container Corp. of America. Process of converting sodium sulfate to sodium sulfite, particularly for pulping processes. 3,397,-957, 8–20–68, Cl. 23—129.
Smolens, Harry G., and O. S. Sprout, Jr., to Pennsalt Chemicals Corp. Chlorination of caustic soda solutions used in textile processing. 3,397,945, 8–20–68, Cl. 8—139.
Snyder, Samuel J., to ACF Industries, Inc. Sliding hopper gate operating mechanism. 3,397,654, 8–20–68, Cl. 105—305.
So, John J. Short-channel field-effect transistor having an impurity gradient in the channel increasing from a midpoint to each end. 3,938,337, 8–20–68, Cl. 317—235.
Societa Italina Telecomunicazioni Siemens S.p.A.: *See*—
  Sarati, Luigi, and Imbrighi. 3,389,296.
Societe d'Electronique et d'Automatisme: *See*—
  Taraud, Bernard M. 3,397,452.
Societe des Forges et Aleliers du Creusot: *See*—
  Lajarrige, André, and Léger. 3,398,027.
Societe Fives Lille-Cail: *See*—
  Delescluse, Leon. 3,397,591.
Soenksen, Uwe: *See*—
  Kindler, Hubert, Soenksen, and Wittwer. 3,398,183.
Sohns, Lester M., to A.S.K. & Associates, Inc. Locking means for roof and wall panel construction. 3,397,496, 8–20–68, Cl. 52—286.
Soldatos, Anthony C., and A. S. Burhans, to Union Carbide Corp. Tacky, curable polymers of bis(2,3-epoxycyclopentyl) ether and a polyol and a process for the preparation thereof. 3,398,102, 8–20–68, Cl. 260—2.
Söldner, Franz: *See*—
  Ehrhardt, Joach'm, Hultzsch, Meier, and Söldner. 3,397,459.
Sorensen, Robert: *See*—
  Scarnato, Thomas J., Sorensen, Dryan, and Lawler. 3,397,923.
Soriente, Alfonse J.: *See*—
  Duff, Joseph H., and Soriente. 3,397,788.

Soulant, Herman A., to United States of America, Navy. Float for measuring wave characteristics and direction. 3,397,574, 8-20-68, Cl. 73—170.
Soundwell Investments Ltd. : *See*—
Steadman, John G., and White. 3,397,418.
Spalinger, Hans, and W. Reber, to Hasler A.-G. Printer having plural hammers and a single hammer activating means. 3,397,766, 8-20-68, Cl. 197—57.
Sparks Corp. : *See*—
Hartman, Maurice D., Jr., and Finkelston. 3,397,761.
Spenadel, Lawrence, H. J. Hall, and I. Kirshenbau, to Esso Research and Engineering Co. Method for making rocket propellant. 3,398,215, 8-20-68, Cl. 264—3.
Spencer, Francis T., to Pepperell Mfg. Co. Method of and apparatus for providing a polyurethane foam with a dense surface layer. 3,398,224, 8-20-68, Cl. 264—321.
Sperberg, Lawrence R. Control of vulcanization state and gradient in pneumatic tires. 3,397,583, 8-20-68, Cl. 73—432.
Sperberg, Lawrence R. Bias constructed truck tire. 3,397,729, 8-20-68, Cl. 152—354.
Sperry Rand Corp. : *See*—
Behr, Joseph L., and Andersen. 3,398,360.
Koch, Earl E. 3,397,584.
Luek, Otto W., and Young. 3,397,527.
Spies, Klaus, and Weirich, to Gewerkschaft Eisenhutte Westfalia. Mine roof support for progressive exploitation. 3,397,543, 8-20-68, Cl. 61—45.
Spiller, Basil H. R. : *See*—
Phillipson, Alan, Spiller, Smith, and Cheesman. 3,397,425.
Spindle, Harvey E. : *See*—
Kilgore, Lee A., Spindle, Casanova, and Dakin. 3,398,348.
Splawski, Joseph M., to Badger Mfg. Corp. Carburetor mounting for air cleaner. 3,397,519, 8-20-68, Cl. 55—505.
Splichal, William F., Jr., to United States of America, Atomic Energy Commission. Neutron detector for measuring dose rate. 3,398,278, 8-20-68, Cl. 250—71.5.
Sprague Electric Co. : *See*—
Geohegan, Eamonn D. A. 3,398,340.
Logan, Gerrard A. 3,398,332.
Pierpont, Ralph E., Rice, Rollins, and Walters. 3,398,339.
Zeppieri, Dominick J. 3,398,333.
Springer, Donald R., and J. E. Lyons. Adjustable golf putter. 3,397,888, 8-20-68, Cl. 273—80.1.
Sprouse, Verner E., and V. H. Williams. Multi-stage rotary engine. 3,397,864, 8-20-68, Cl. 253—46.
Sprout, Oliver S., Jr. : *See*—
Smolens, Harry G., and Sprout. 3,397,945.
Square D Co. : *See*—
Dessert, Edward P. 3,398,249.
Squibb, E. R., & Sons, Inc. : *See*—
Bruno, Charles F. 3,398,055.
Squires, Arthur M. Process for hydrogen or ammonia synthesis gas. 3,397,962, 8-20-68, Cl. 23—213.
Stahl, Walter A. Golf training aid. 3,397,892, 8-20-68, Cl. 273—190.
Stakun, Vitie J., to United States of America, Navy. Scan technique for vidicon tracter. 3,398,284, 8-20-68, Cl. 250—203.
Stamicarbon N.V. : *See*—
Bokhoven, Cornelis, and Hanssen. 3,398,358.
Bongers, Paul J. W. H. M. 3,397,931.
Standard Car Truck Co. : *See*—
Williams, Ray C. 3,397,653.
Standard Oil Co. (Indiana) : *See*—
Brown, John S. 3,397,734.
Standard Screw Co. : *See*—
Bell, Frank W. 3,397,863.
Stanford Research Institute : *See*—
Shoulders, Kenneth R. 3,398,317.
Starr, Leon : *See*—
Geacintov, Cyril, Starr, and Toth. 3,398,073.
Start, Ernest : *See*—
Blood, Raymond, and Start. 3,397,555.
Stauffer Chemical Co. : *See*—
Giolito, Silvio L. 3,398,116.
Stead, Cecil V. : *See*—
Barben, Ian K., and Stead. 3,398,133.
Steadman, John G., and R. C. White, to Soundwell Investments Ltd. Methods of assembly of footwear uppers. 3,397,418, 8-20-68, Cl. 12—146.
Steeves, Robert W. : *See*—
Allen, Lloyd R., and Steeves. 3,398,040.
Steffanson, Robert S., R. D. Barnard, and A. K. Johnson, to The Dow Chemical Co. Mercury vertical cathode electrolytic cell. 3,398,080, 8-20-68, Cl. 204—219.
Steimel, Karl, to Licentia Patent-Verwaltungs-G.m.b.H. Cyclotron device including dummy magnetic components for improved magnetic field symmetry. 3,398,308, 8-20-68, Cl. 313—62.
Stein, Wilhelm : *See*—
Leitz, Ernst, and Stein. 3,397,606.
Steinbach, Horst : *See*—
Damm, Klaus, Steinbach, and Noll. 3,398,172.
Steiner, John C., and J. H. Wolgemuth, to General Motors Corp. Hot gas engine control system. 3,397,533, 8-20-68, Cl. 60—24.
Stempel, Arthur : *See*—
Berger, Leo, Stempel, Sternbach, and Wenis. 3,398,159.
Stephens Industries, Inc. : *See*—
Stephens, Joseph F. 3,397,777.
Stephens, Joseph F., to Stephens Industries, Inc. Embossed slab of glue. 3,397,777, 8-20-68, Cl. 206—65.
Sterling Drug Inc. : *See*—
Clinton, Raymond O. 3,398,140.
Sternbach, Leo H. : *See*—
Field, George F., and Sternbach. 3,398,139.
Sternbach, Leo H. : *See*—
Brust, Bernard, Fryer, and Sternbach. 3,398,156.
Berger, Leo, Stempel, Sternbach, and Wenis. 3,398,159.
Stevenson, George W. : *See*—
Arthur, Edwin P., Carlsen, and Stevenson. 3,398,079.
Stewart, Howard F., to Dow Corning Corp. Redistribution of SiH bonds. 3,398,177, 8-20-68, Cl. 260—448.2.
Stewart, Willis L. : *See*—
Greene, John P., and Stewart. 3,397,926.
Still, William L., to Westinghouse Electric Corp. Method utilizing a pair of subsurface antennas for determining the physical properties effecting radio energy propagation through earth. 3,398,356, 8-20-68, Cl. 324—6.
Stillit, Gerald B. Apparatus for teaching knowledge. 3,397,466, 8-20-68, Cl. 35—9.
Stöeng, Gunnar : *See*—
Rövde, Björn O., and Stöeng. 3,397,424.
Stolz, Mary A. L. : *See*—
Stolz, Walter A., Mary, Krafft, and Bird. 3,397,572.
Stolz, Walter A., deceased (by M. A. L. Stolz, administratrix), J. M. Krafft, and F. W. Bird. Device for measuring stress-strain curve. 3,397,572, 8-20-68, Cl. 73—94.
Stone, Eliot, to The National Cash Register Co. Protective laminate for film containing silver micro-image. 3,397,980, 8-20-68, Cl. 96—50.
Strand, Edna E. : *See*—
Strand, Erling K. 3,397,582.
Strand, Erling K., deceased (by E. E. Strand, executrix). Material sampling apparatus. 3,397,582, 8-20-68, Cl. 73—423.
Strange, Charles H. Device for releasing water to prevent freezing. 3,397,711, 8-20-68, Cl. 137—62.
Strassburger, Julius H., to National Steel Corp. Blast furnace automatic control apparatus. 3,397,877, 8-20-68, Cl. 266—30.
Stratman, Jerome F. : *See*—
Jarvis, Marvin A., and Stratman. 3,397,785.
Strickland, Barney R., to Esso Research and Engineering Co. Pour point depressant additive. 3,397,970, 8-20-68, Cl. 44—62.
Strobel, Albert F. : *See*—
Catino, Sigmund C., and Strobel. 3,398,143.
Strohmeyer, Max, K. Hiller, H. Scholz, and H. Kindler, to Badische Anilin- Soda-Fabrik Aktiengesellschaft. Production of p-dialkylbenzenes. 3,398,206, 8-20-68, Cl. 260—671.
Strong, William K., to McDonald's System, Inc. Process for preparing frozen french fry potato segments. 3,397,993, 8-20-68, Cl. 99—100.
Stroop, John H., to Total Packaging, Inc. Thermoplastic packaging machine. 3,397,508, 8-20-68, Cl. 53—184.
Studiengesellschaft Kohle m.b.H. : *See*—
Neumann, Wilhelm P., and Pedain. 3,398,169.
Sturges, Harold W. Hitch for vehicle. 3,397,900, 8-20-68, Cl. 280—478.
Sturm, Fred M. : *See*—
Boldery, Luther E. 3,397,667.
Sturtevant, Harold V. Steam engine inlet valve mechanism. 3,397,619, 8-20-68, Cl. 91—175.
Sublett, Bobby J. : *See*—
Sloan, Cephas H., and Sublett. 3,397,705.
Suleski, Anthony C., to Hazeltine Research, Inc. Method for the electropurification of water. 3,398,076, 8-20-68, Cl. 204—180.
Suling, Carlhans, and K.-E. Schnalke, to Farbenfabriken Bayer Aktiengesellschaft. Phosphorus containing polymers and copolymers. 3,398,127, 8-20-68, Cl. 260—79.3.
Sullivan, David J., and R. Goldsmith, to General Plastics Corp. Structural bearing pad. 3,397,856, 8-20-68, Cl. 248—22.
Sullivan, Edmund T., to Air Reduction Co., Inc. Liquid cooling of oppositely charged conductive members with elongated insulated coolant passage between. 3,398,231, 8-20-68, Cl. 174—15.
Sullivan, Thomas A. : *See*—
De Beauchamp, Robert L., and Sullivan. 3,397,946.
Sulzer Bros. Ltd. : *See*—
Ergenc, Sahabettin. 3,397,548.
Summerlin, Frederick A. Electrical synchro having one surface of the rotor inclined. 3,398,386, 8-20-68, Cl. 336—135.
Sun Oil Co. : *See*—
Butte, Walter A., Jr. 3,398,207.
Duling, Irl N., and Schneider. 3,398,165.
Sunbeam Corp. : *See*—
Barnas, Louis A., Jr., Dokos, and Patzer. 3,397,456.
Suzuki, Yoshihisa, to Kabushiki Kaisha Hitachi Seisakusho. Carrier phase selection type semiconductor device for oscillation and amplification of microwaves. 3,398,301, 8-20-68, Cl. 307—299.
Swain, Pervis A. : *See*—
Granzow, Daniel B., Gawron, Graff, and Swain. 3,397,628.
Swart, Robert, and I. Berlin, to Vitramon, Inc. Solid-state electrical component combining multiple capacitors with other kinds of impedance. 3,398,326, 8-20-68, Cl. 317—161.
Sweger, Theodore J., to Illinois Railway Equipment Co. Journal guide means for railway car journal boxes. 3,397,930, 8-20-68, Cl. 308—41.
Swift & Co. : *See*—
Pearce, Thomas J. 3,397,783.
Schiernitzauer, Edward A. 3,397,868.
Swift, Thomas E. : *See*—
Noddin, Ray C., Brayley, and Swift. 3,398,353.
Swinarton, John C. : *See*—
Hofer, Walter D. 3,397,524.
Swiss Aluminum Ltd. : *See*—
Lochmann, Helmut, and Quenzer. 3,398,082.
Sylvania Electric Products, Inc. : *See*—
De Vos, Henrik A. J., and Toth. 3,398,270.

Symons Mfg., Co. : *See*—
Williams, Walter D. 3,397,858.
Szekely, Otto E., to Power Flo Products, Inc., A.E.M. Division. Hydraulically controlled planetary drive structure. 3,397,597, 8-20-68, Cl. 74—782.
TRW, Inc. : *See*—
Crook, Gaines M. 3,397,586.
Taccone, Russell W., to Shahmoon Industries, Inc. Pull and spray station for centrifugal casting machine. 3,397,735, 8-20-68, Cl. 164—267.
Tada, Mitsuru. Apparatus for continuously burning wastes. 3,397,657, 8-20-68, Cl. 110—8.
Takeda Chemical Industries, Ltd. : *See*—
Morita, Katsura, Oghiai, and Marumoto. 3,398,149.
Talon, Inc. : *See*—
Gwyn, Childress B., Jr. 3,397,453.
Gwyn, Childress B., Jr. 3,397,454.
Tanabe, Koji : *See*—
Mori, Tadamichi, and Tanabe. 3,397,629.
Tanaka, Tameo, to Kabushiki Kaisha Yaskawa Denki Seisakusho. Gating control system utilizing electro-parametric oscillation. 3,398,293, 8-20-68, Cl. 307—88.
Taormina, Samuel : *See*—
Kersnar, Paul W., and Taormina. 3,398,097.
Kersnar, Paul W., and Taormina. 3,398,198.
Tappan Co., The : *See*—
Lamb, John T. 3,398,371.
Taraud, Bernard M., to Societe d'Electronique et d'Automatisme. Printed circuit manufacturing method. 3,397,452, 8-20-68, Cl. 29—625.
Tarnow, Horst, H. Holtschmidt, and G. Unterstenhofer, to Farbenfabriken Bayer Aktiengesellschaft. Pentachlorophenyl-trichloromethyl imide chloride. 3,398,192, 8-20-68, Cl. 260—566.
Tatter, Charles W. : *See*—
Nosnick, Peter P., and Tatter. 3,397,992.
Taul, Horst, to Glanzstoff A.G. Method of purifying ethylene glycol by water addition distillation and treatment with activated clay. 3,398,061, 8-20-68, Cl. 203—18.
Taylor Instrument Companies : *See*—
Klumb, Harvey A. 3,397,578.
Taylor, Lester W. : *See*—
Wohlford, William P., and Taylor. 3,397,471.
Taylor, William E., to American Can Co. Reclosable can. 3,397,807, 8-20-68, Cl. 220—42.
Taylor-Winfield Corp., The : *See*—
Pelton, Clyde I. 3,397,563.
Technicolor Corp. of America : *See*—
Schrader, Clarence O. 3,397,937.
Technicon Corp. : *See*—
Johnson, Carl V. 3,397,791.
Tektronix, Inc. : *See*—
Prentice, Leon A. 3,397,590.
Teledyne Industries, Inc. : *See*—
Luehrmann, William H., and Parker. 3,398,394.
Telefonaktiebolaget L M Ericsson : *See*—
Edstrom, Nils H. 3,398,243.
Telefunken Patentverwertungs-G.m.b.H. : *See*—
Kratochvil, Friedrich. 3,398,236.
Prichodjko, Alexander, Simianer, and Hipp. 3,398,268.
Tench, John R., and L. A. Doggrell, to Westinghouse Electric Corp. Sealed storage battery cell. 3,397,815, 8-20-68, Cl. 220—67.
Tenkku, Wayland A., and F. Hribar, Jr., to Fluid Regulators Corp. Directional control and pressure regulating valve. 3,397,717, 8-20-68, Cl. 137—529.
Texas Instruments Inc. : *See*—
Embree, Peter. 3,398,396.
Roden, Robert B. 3,397,754.
Ward, Phillip W. 3,398,395.
Thaden, Herbert V. Elbow winding apparatus. 3,397,847, 8-20-68, Cl. 242—7.
Then, Alojzy : *See*—
Then, Sophia and A. 3,397,538.
Then, Sophia and A. Marine propulsion unit. 3,397,538, 8-20-68, Cl. 60—221.
Thiele, Edward G., to Cherry-Burrell Corp. Off center butt joint for cartons. 3,397,832, 8-20-68, Cl. 229—37.
Thies, B. : *See*—
Ameling, Bernhard. 3,397,557.
Thiokol Chemical Corp. : *See*—
Boroson, Norman H. 3,397,712.
Thomas, Robert L., to American Telephone and Telegraph Co. Multiple address circuit. 3,398,234, 8-20-68, Cl. 178—3.
Thompson, Joshua B., and G. C. Hildred, to Cominco Ltd. Process for the production of granular nitrogenous compounds. 3,398,191, 8-20-68, Cl. 260—555.
Thompson, Theodore F. Fifth wheel mount. 3,397,899, 8-20-68, Cl. 280—432.
Thompson, William J., and D. K. Cable, to Angeles Metal Trim Co. Partition wall with yieldable cap members. 3,397,495, 8-20-68, Cl. 52—241.
Thornhill, Alan R. : *See*—
Holmes, Peter D., Pitkethly, and Thornhill. 3,398,084.
Tiberiis, Robert D., to Victor Metal Products Corp. Collapsible tube with plastic outsert. 3,397,821, 8-20-68, Cl. 222—92.
Tine, Inc. : *See*—
Latimer, Kenneth B. 3,398,048.
Tjaden, Jan, to Hoefliger & Karg. Container. 3,397,774, 8-20-68, Cl. 206—45.34.
Tohda, Minoru, N. Kuwana, and K. Kawabe, to Eisai Co., Ltd. Morpholinoacetohydrazide alkyl halides and process for their preparation. 3,398,147, 8-20-68, Cl. 260—247.2.
Tooke, James W., to Phillips Petroleum Co. Engine fuel additives. 3,397,969, 8-20-68, Cl. 44—57.
Topliffe, Doris H. Folding ironing board and cabinet. 3,397,472, 8-20-68, Cl. 38—104.
Torick, Emil, and A. Kaiser, to Columbia Broadcasting System, Inc. Control circuit for restricting instantaneous peak levels of audio signals. 3,398,381, 8-20-68, Cl. 332—19.
Total Packaging, Inc. : *See*—
Stroop, John H. 3,397,508.
Toth, Louis R., and O. F. Keller, to California Institute Research Foundation. Filter element. 3,397,794, 8-20-68, Cl. 210—488.
Toth, Miklos G. : *See*—
De Vos, Henrik A. J., and Toth. 3,398,270.
Toth, William J. : *See*—
Geacintov, Cyril, Starr, and Toth. 3,398,073.
Toyo Rayon Kabushiki Kaisha : *See*—
Kitagawa, Hideji, Kinoshita, and Uchiyama. 3,397,944.
Trbovich, Nick, to Inland Steel Co. Method for providing metallic strip of uniform thickness and flatness. 3,397,566, 8-20-68, Cl. 72—365.
Tregay, John L. : *See*—
Bruning, John V. Patzke, Chiselli, and Tregay. 3,397,627.
Tregay, John L., and K. L. Helland, to Addressograph-Multigraph Corp. Photoelectrostatic copying machine. 3,398,259, 8-20-68, Cl. 219—216.
Treharne, Richard W., and C. K. McKibben, to Charles F. Kettering Foundation. Direct reading, wavelength independent radiometer employing a pyroelectric crystal detector. 3 398,281, 8-20-68, Cl. 250—83.3.
Tripp, Alan R. : *See*—
Hunt, Rowland D., and Tripp. 3,397,753.
Trowbridge, Clarence D., to Inland Steel Co. Slab handling device. 3,397,907, 8-20-68, Cl. 294—81.
Tsao, Utah, to The Lummus Co. Olefin oxide purification by fractional distillation followed by side stream stripping. 3 398,062, 8-20-68, Cl. 203—78.
Tucker, Thomas N. : *See*—
Haga, Leigh J., and Tucker. 3,398,033.
Tucker, Thomas N., to Dow Corning Corp. Semiconductor integrated circuits and method of making same. 3,397,448, 8-20-68, Cl. 29—577.
Turner, John H. W., to Hardman & Holden Ltd. Vinyl halide resins stabilised with metal organic compounds. 3,398,108, 8-20-68, Cl. 260—23.
Turner, Ralph W., to Imperial Chemical Industries Ltd. (2-Hydroxy - 3 - aminopropoxy)benzo(B)thiophen derivatives which have β-adrenergic blocking activity. 3,398,161, 8-20-68, Cl. 260—330.5.
Turner, Stanley, to Avery Products Corp. Process for manufacture of stabilized pressure sensitive adhesive. 3,398,014, 8-20-68, Cl. 117—111.
Tuttle, Wainwright, to Altamil Corp. Foundry mold conveying apparatus with pneumatic diaphragm clamping means. 3,397,737, 8-20-68, Cl. 164—327.
Tyjewski, Cezar. Combination fishline float and fishhook removal tool. 3,397,479, 8-20-68, Cl. 43—44.95.
Uchiyama, Hiroshi : *See*—
Kitagawa, Hideji, Kinoshita, and Uchiyama. 3,397,944.
Ugine Kuhlmann : *See*—
Foulletier, Louis. 3,398,202.
Ullman, John E., to Huntingdon Industries, Inc. Packaging apparatus. 3,397,509, 8-20-68, Cl. 53—285.
Ulmer, William L., and H. W. McQuaid, said McQuaid assor., to said Ulmer. Method of making bimetal tubing. 3,397,445, 8-20-68, Cl. 29—474.4.
Ungler, Melvin C. : *See*—
Edris, Charles R., Fraser, and Unglert. 3,398,312.
Union Carbide Corp. : *See*—
Day, Thomas G. 3,397,801.
Erb, Ezra. 3,397,547.
Ford, Douglas L., and Kennard. 3,398,286.
Garty, Kenneth T., and Gibb. 3,398,119.
Holmes, Ronald L. W., and Hoffman. 3,397,878.
Hostettler, Fritz, and Cox. 3,398,106.
Mellors, Geoffrey W., and Senderoff. 3,398,068.
Soldatos, Anthony C., and Burhans. 3,398,102.
Union Chimique Chemische Bedrijven : *See*—
Champ, Roger, Martin, and Winand. 3,397,955.
Union Oil Co. of California : *See*—
Marsh, Glenn A. 3,398,065.
Uniroyal, Inc. : *See*—
Wheeler, Edward L. 3,398,193.
United Aircraft of Canada Ltd. : *See*—
Newland, Allan B. 3,397,855.
United Aircraft Corp. : *See*—
D'Ambrosio, Michael A. 3,397,580.
Green, Charles W., Jr. 3,397,537.
United-Carr, Inc. : *See*—
Hartsock, Robert E. 3,398,245.
United States of America
National Aeronautics and Space Administration : *See*—
Anderson, William W., Jr. 3,397,932.
Williams, Ross E. 3,398,269.
Air Force : *See*—
Downey, Edward J., Jr., Bauder, and Cramm. 3,398,313.
Guenther, Arthur H. 3,398,322.
Jones, Richard V., and Smith. 3,398,382.
Jones, Richard V., and Smith. 3,398,383.
Sanders, Warren M., and Melton. 3,398,288.
Army : *See*—
Bobinski, Jack, and Carignan. 3,397,637.
Crump, Lloyd R. 3,398,370.
Dooley, Jerry L., and McCarley. 3,398,341.
Fraser, William J. 3,398,072.
Howell, Cleves H., Jr. 3,397,732.
Morton, George A., Pressley, and Forgue. 3,398,316.
Pillersdorf, Arthur, Kuhn, and Bowman. 3,398,007.
Raffalovich, Aubrey J. 3,398,067.
Rittenbach, Otto E. 3,398,364.
Scobee, Robert R. 3,397,540.
Warren, Raymond W. 3,397,713.

United States of America—Continued
Atomic Energy Commission: *See*—
Batzer, Thomas H., Gunderson, and Murphy. 3,397,862.
Hanson, Lloyd A. 3,398,098.
Huen, Tony. 3,398,297.
Kelly, William S., Weidling, and Hemphill. 3,397,813.
Moultbrop, Homer A. 3,398,280.
Propst, Robert C. 3,398,064.
Splichal, William F., Jr. 3,398,278.
Webster, Donald S. 3,397,869.
Interior: *See*—
De Beauchamp, Robert L., and Sullivan. 3,397,946.
Navy: *See*—
Grigor, James, Parker, and Currie. 3,398,162.
Kaufman, Maxime G. 3,398,374.
McNutt, Douglas P. 3,397,851.
Poole, John S. 3,398,330.
Poulin, Clyde J., and Rice. 3,398,031.
Soulant, Herman A. 3,397,574.
Stakun, Vitie J. 3,398,284.
Willis, Joseph W. 3,398,266.
Zall, David M. 3,397,964.
United States Steel Corp.: *See*—
Dykeman, George, and Slamar. 3,397,672.
Harvey, Mahlon A., and Helwig. 3,398,010.
Universal Oil Products Co.: *See*—
Addison, George E. 3,398,083.
Bloch, Herman S., and Pollitzer. 3,398,131.
Cyba, Henryk A. 3,398,170.
Frandsen, Walter N. 3,397,842.
Rosenwald, Robert H., and Urban. 3,398,086.
Van Tassell, Harry M. 3,398,063.
Ward, Dennis J. 3,398,208.
Unterstenhofer, Gunter: *See*—
Tarnow, Horst, Holtschmidt, and Unterstenhofer. 3,398,-192.
Urban, Peter: *See*—
Rosenwald, Robert H., and Urban. 3,398,086.
VEB Jena, Carl Zeiss: *See*—
Ehrhardt, Joachim, Hultzsch, Meier, and Söldner. 3,397,-459.
VEB Transformatoren- und Rontgenwerk Dresden: *See*—
Klemm, Rudolf, Wagner, Ehrentraut, Hempel, and Schumann. 3,398,039.
Vaillant, Joh., KG: *See*—
Keppel, Ernst. 3,397,940.
Valadez, Heliodoro, and R. Perez. Machine for forming flour tortillas. 3,397,655, 8-20-68, Cl. 107—15.
Valdespino, Joe M., to Pacific Flush Tank Co. Sewage treatment system. 3,397,789, 8-20-68, Cl. 210—201.
Vail, Victor: *See*—
Krogstad, Reuben S., V. and W. Vail. 3,398,287.
Vail, Walter: *See*—
Krogstad, Reuben S., V. and W. Vail. 3,398,287.
Valle, Thomas, to The Fall River Exploration and Mining Co. Liquid-solid reaction apparatus. 3,397,876, 8-20-68, Cl. 266—22.
Vanderbilt, Byron M.: *See*—
Clayton, Robert E., and Vanderbilt. 3,398,045.
Vanderbilt, R. T., Co., Inc.: *See*—
Karsten, Kenneth S., and Russell. 3,398,181.
Van Der Grinten N.V.: *See*—
Hendrickx, Andreas J. J. 3,397,985.
Van Der Minne, Johan L., and P. H. J. Hermanie, to Shell Oil Co. Anti-static hydrocarbon fuel and additive therefor. 3,397,971, 8-20-68, Cl. 44—68.
Vandersall, Howard L.: *See*—
Langguth, Robert P., and Vandersall. 3,398,019.
Vander Schraaf, Eric: *See*—
Lieber, Roy E., Vander Schraaf, and Dassau. 3,398,087.
Vanderveer, Ramon D.: *See*—
Zavitz, Arnold L., and Vanderveer. 3,397,429.
Varian Associates: *See*—
Brown, Lawrence E., and Jones. 3,398,307.
Haimson, Jacob. 3,398,375.
Van Paesschen, August J., and M. N. Vrancken, to Gevaert Photo-Producten N.V. Photographic material. 3,397,988, 8-20-68, Cl. 96—114.
Van Senden, Karel G.: *See*—
Das, Balaram, and Van Senden. 3,398,096.
Van Tassell, Harry M., to Universal Oil Products Co. Separation of ethylbenzene and styrene by low pressure, high temperature distillation. 3,398,063, 8-20-68, Cl. 203—91.
Van 't Hoff, Teunis, to Impromex A.G. Cups, mugs or similar liquid containers. 3,397,867, 8-20-68, Cl. 259—1.
Velsicol Chemical Corp.: *See*—
Richter, Sidney B., and Levin. 3,397,977.
Richter, Sidney B., and Levin. 3,397,978.
Velsor, Frederick C., Jr.: *See*—
Ostrander, Edgar A., and Velsor. 3,397,838.
Vereinigte Glanzstoff-Fabriken AG: *See*—
Rein, Walter, Siggel, and Koepp. 3,398,124.
Vezina, Claude, and K. Singh, to American Home Products Corp. Microbiological transformations of sterols. 3,398,054, 8-20-68, Cl. 195—51.
Victor Metal Products Corp.: *See*—
Tiberiis, Robert D. 3,397,821.
Viesturs, Eric A. Process of making sheets for photo albums or the like. 3,398,036, 8-20-68, Cl. 156—267.
Vitamins, Inc.: *See*—
Elenbogen, Gilbert D., and Baron. 3,397,994.
Elenbogen, Gilbert D. 3,397,995.
Vitramon, Inc.: *See*—
Swart, Robert, and Berlin. 3,398,326.
Voit, W. J., Rubber Corp.: *See*—
Caplan, David M. 3,397,887.
Volkmann, Dieter, to Dieter Haubold, d.b.a. Dieter Haubold Industrielle. Pneumatic air operated fastener driving apparatus. 3,397,828, 8-20-68, Cl. 227—130.
Volkswagenwerk Aktiengesellschaft: *See*—
Lubinski, Siegfried W. L. 3,397,596.
Vorn Berger, Walter A.: *See*—
Kamborian, Jacob S., Vorn Berger, and Arsenault. 3,397,-417.
Voss, Joseph A. Catamenial tampon and method of making. 3,397,695, 8-20-68, Cl. 128—285.
Vrancken, Marcel N.: *See*—
Van Paesschen, August J., and Vrancken. 3,397,988.
Waagner-Biro AG.: *See*—
Kemmetmueller, Roland. 3,397,678.
Wacker-Chemie G.m.b.H.: *See*—
Nitzsche, Siegfried, Wick, and Wegehaupt. 3,398,176.
Wagner, Fritz: *See*—
Klemm, Rudolf, Wagner, Ehrentraut, Hempel, and Schumann. 3,398,039.
Wagner, Kuno, to Farbenfabriken Bayer Aktiengesellschaft. Reducing agent. 3,397,963, 8-20-68, Cl. 23—226.
Wahlberg, Eric C. Multiple transaction vending machine. 3,397,763, 8-20-68, Cl. 194—4.
Wainwright, Carlyle H., to The Bentley Engineering Co. Driving arrangement for circular knitting machines. 3,397,-554, 8-20-68, Cl. 66—56.
Walde, Robert A., to Air Products and Chemicals, Inc. Process and catalyst for the oxidation of olefins. 3,398,199, 8-20-68, Cl. 260—604.
Walker, Beeby G. Universally mounted archery bow handle. 3,397,685, 8-20-68, Cl. 124—24.
Walker, Peter A., V. A. J. Maller, and P. I. Bonyhard, to International Computers and Tabulators Ltd. Cryotron using anisotropic ferromagnetic film. 3,398,299, 8-20-68, Cl. 307—245.
Walker, William R., to Hydro-Craft Inc. Tube clamp assembly. 3,397,431, 8-20-68, Cl. 24—125.
Wallace, David J., and M. A. Weaver, to Eastman Kodak Co. Process for the synthesis of yellow methine dyes containing the dicyanomethylidene group. 3,398,152, 8-20-68, Cl. 260—288.
Wallenfels, Miklos: *See*—
Goldman, Max, and Wallenfels. 3,398,016.
Wallis, Bernard J. Work transfer mechanism. 3,397,799, 8-20-68, Cl. 214—1.
Walters, Gordon E.: *See*—
Pierpont, Ralph E., Rice, Rollins, and Walters. 3,398,339.
Walters, Harold A., to The Dow Chemical Co. Transparent flat coated substrates. 3,398,018, 8-20-68, Cl. 117—124.
Wapner, Joseph: *See*—
Genin, Robert I., and Wapner. 3,397,467.
Ward, Dennis J., to Universal Oil Products Co. Molecular sieve drying process. 3,398,208, 8-20-68, Cl. 260—674.
Ward, John R., to Inland Steel Products Co. Support system for a ceiling. 3,397,499, 8-20-68, Cl. 52—495.
Ward, Phillip W., to Texas Instruments Inc. Seismic amplifier system with preprogrammed gain control. 3,398,395, 8-20-68, Cl. 340—15.5.
Ward, Richard: *See*—
Small, Fred, and Ward. 3,397,915.
Ward, Wyley D.: *See*—
Webb, James E. 3,397,512.
Waring, James C., to Reynolds Metals Co. Building apparatus and method of making same. 3,397,494, 8-20-68, Cl. 52—122.
Warncke, Ernst, to O. H. Drager. Breathing apparatus. 3,397,693, 8-20-68, Cl. 128—191.
Warner-Lambert Pharmaceutical Co.: *See*—
Fusco, Raffaello, and Bianchi. 3,398,158.
Warren, Raymond W., to United States of America, Army. Feedback divider for fluid amplifier. 3,397,713, 8-20-68, Cl. 137—81.5.
Warrikhoff, Harald: *See*—
Hosemann, Rolf, and Warrikhoff. 3,398,282.
Wartman, William B., Jr.: *See*—
Harlow, Edward S., and Wartman. 3,397,700.
Washburn, George W., to Westinghouse Electric Corp. Traveling wave tube with improved thermal and magnetic circuitry. 3,398,315, 8-20-68, Cl. 315—3.5.
Watermann, Willy: *See*—
Golla, Franz, Watermann, and Weirich. 3,397,544.
Watson, Robert, Jr. Building structure with alternating structural members and panels in compression. 3,397,500, 8-20-68, Cl. 52—495.
Watts, Richard M., to Reynolds Metals Co. Supporting structure and blanks therefor. 3,397,796, 8-20-68, Cl. 211—73.
Weaver, Max A.: *See*—
Wallace, David J., and Weaver. 3,398,152.
Webb, James E., administrator of the National Aeronautics and Space Administration with respect to an invention of W. D. Ward. Vapor-liquid separator. 3,397,512, 8-20-68, Cl. 55—204.
Webb, Jervis B., Co.: *See*—
Kondur, Louis, and Dehne. 3,397,650.
Webb, John L. Hand paddle. 3,397,414, 8-20-68, Cl. 9—307.
Webb, Larry J.: *See*—
Basehore, Carl J., and Webb. 3,398,290.
Weber, Paul, to Fritz Hellige & Co. G.m.b.H. Hysteresis diagram display device. 3,398 359, 8-20-68, Cl. 324—34.
Weber, William W. Automatic spear gun. 3,397,476, 8-20-68, Cl. 43—6.
Webster, Donald S., to United States of America, Atomic Energy Commission. Hydrofoil agitator blade. 3,397,869, 8-20-68, Cl. 259—108.
Webster, William C.: *See*—
Slager, John J., and Webster. 3,397,664.
Wegematic Corp.: *See*—
Jacobson, David E., and Ek. 3,397,636.
Wegener, Heinrich. Device for indicating and computing game scores. 3,397,839, 8-20-68, Cl. 235—91.
Weidling, Fred M.: *See*—
Kelly, William S., Weidling, and Hemphill. 3,397,813.

Wegehaupt, Karl-Heinrich W.: *See*—
Nitzsche, Siegfried, Wick, and Wegehaupt. 3,398,176.
Weirich, Walter: *See*—
Golla, Franz, Watermann, and Weirich. 3,397,544.
Spies, Klaus, and Weirich. 3,397,543.
Weiss, Arthur J., to Continental Can Co., Inc. Wraparound carton and blank therefor. 3,397,776, 8-20-68, Cl. 206—65.
Wells, Wesley G., to McDonnell Aircraft Corp. Bushing adapter for drill units. 3,397,600, 8-20-68, Cl. 77—7.
Wendell, George E., to Litton Precision Products, Inc. Inorganic brush and slip-ring assembly. 3,398,387, 8-20-68, Cl. 339—5.
Wenis, Edward: *See*—
Berger, Leo, Stempel, Sternbach, and Wenis. 3,398,159.
West Virginia Pulp and Paper Co.: *See*—
De Ligt, John. 3,397,675.
Western Electric Co., Inc.: *See*—
Avedissian, Michael K., and Manowczak. 3,397,451.
Fuchs, Francis J., Jr. 3,397,562.
Sharp, Donald J. 3,397,446.
Westinghouse Air Brake Co.: *See*—
Biedess, Anthony R. 3,397,651.
Westinghouse Electric Corp.: *See*—
Apfelbeck, Otto L. 3,398,366.
Benbow, Eugene C. 3,398,367.
Bock, Ashley P., Henry, and Redmond. 3,398,252.
Buck, Daniel C. 3,398,314.
Cane, Domenick, Katzor, and Rabas. 3,398,059.
Colclaser, Robert G., Jr. 3,398,357.
De Corso, Serafino M., and Wolf. 3,398,229.
Edris, Charles R., Fraser, and Unglert. 3,398,312.
Evans, Paul, Jr., and Kaiser. 3,398,349.
Gill, Merrion D., and Bezgela. 3,397,929.
Harnish, James R. 3,397,552.
Kilgore, Lee A., Spindle, Casanova, and Dakin. 3,398,348.
Montoro, Richard A. 3,397,438.
Page, Derrick J. 3,398,311.
Still, William L. 3,398,356.
Tench, John R., and Doggrell. 3,397,815.
Washburn, George W. 3,398,315.
Whaley, Henry P., and M. L. Hovland, to Erie Development Co. Product sizing control in a grinding circuit closed by a separating means. 3,397,844, 8-20-68, Cl. 241—21.
Wheeler, Edward L., to Uniroyal, Inc. 4-dialkylamino-4′-secondary alkyl aminodiphenylamines. 3,398,193, 8-20-68, Cl. 260—576.
Whirlpool Corp.: *See*—
Dutcher, Ival G. 3,397,902.
White, Joseph F.: *See*—
Barringer, Anthony R., and White. 3,398,355.
White, Raymond C.: *See*—
Steadman, John G., and White. 3,397,418.
Whitehill, Norris D., to Walter Kidde & Co. Mechanism for operating and disconnecting a sheathed cable. 3,397,433, 8-20-68, Cl. 24—230.
Whitesides, Veronica: *See*—
Piekarski, Leonard. 3,398,328.
Piekarski, Leonard. 3,398,384.
Wick, Manfred: *See*—
Nitzsche, Siegfried, Wick, and Wegehaupt. 3,398,176.
Wicklund, Dale L. Guide line supporting apparatus. 3,397,458, 8-20-68, Cl. 33—86.
Wicklund, Roy C. Ice trimming device. 3,397,750, 8-20-68, Cl. 175—18.
Wiebe, Albert E., to The McKay Co. Ferrous welding electrode for manual arc welding. 3,398,257, 8-20-68, Cl. 219—146.
Wilder, Leslie N., to Icore Industries. Double reject gate mechanism. 3,397,779, 8-20-68, Cl. 209—74.
Wilkins, Paul E., to Phillips Petroleum Co. Method of fibrillating oriented film. 3,397,825, 8-20-68, Cl. 225—3.
Wilkins, William B., to Reinforced Plastic Container Corp. Collapsible container. 3,397,829, 8-20-68, Cl. 229—4.5.
Willems, Jozef F.: *See*—
De Haes, Louis M., and Willems. 3,397,983.
Willetts, Elwood H. Vehicle suspension system. 3,397,896, 8-20-68, Cl. 280—104.5.
Williams, Carl J., Jr., to Eastman Kodak Co. Silver dye bleach materials improving image density. 3,397,984, 8-20-68, Cl. 96—73.
William Cotton, Ltd.: *See*—
Blood, Raymond, and Start. 3,397,555.
Williams, Ray C., to Standard Car Truck Co. Lateral motion bearing adapter. 3,397,653, 8-20-68, Cl. 105—218.
Williams, Richard A., to Imperial Chemical Industries Ltd. Process for producing hexamethylenediamine. 3,398,195, 8-20-68, Cl. 260—583.
Williams, Ross E., to United States of America. Polychromatic optical correlator. 3,398,269, 8-20-68, Cl. 235—181.
Williams, Sherrod A., Jr.: *See*—
Blatz, Paul E., and Williams. 3,398,094.
Williams, Vernon H.: *See*—
Sprouse, Verner E., and Williams. 3,397,864.
Williams, Walter D., to Symons Mfg. Co. Concrete slab form panel-supporting bracket. 3,397,858, 8-20-68, Cl. 249—18.
Willis, Joseph W., to United States of America, Navy. Aerodynamic coefficients computer circuit. 3,398,266, 8-20-68, Cl. 235—150.2.
Willis, Rene A., Jr.: *See*—
Godshalk, Henry W., and Willis. 3,398,113.
Willis, William D., to Herculos, Inc. Chemical promotion of a rubber-filler composition with tetramethylene bis(azidoformate). 3,398,111, 8-20-68, Cl. 260—33.6.
Wilson, Bryan C. Drill bit grinding accessory. 3,397,492, 8-20-68, Cl. 51—219.
Wilson, Harold F., and R. L. Skiles, to Rohm & Haas Co. Phosphorimidic triamide salts. 3,398,189, 8-20-68, Cl. 260—551.
Wilson, Newton R.: *See*—
Bolen, Kenneth E., Larkin, and Wilson. 3,397,724.
Winand, Louis: *See*—
Champ, Roger, Martin, and Winand. 3,397,955.
Wittwer, Arnold: *See*—
Kindler, Hubert, Soenksen, and Wittwer. 3,398,183.
Wohlford, William P., and L. W. Taylor, to Allis Chalmers Mfg. Co. Support for ejector cylinder. 3,397,471, 8-20-68, Cl. 37—129.
Wolf, Charles B.: *See*—
De Corso, Serafino M., and Wolf. 3,398,229.
Wolf, Horst, to Zinser-Textilmachinen Gesellschaft mit Beschraenkter. Rail speed control arrangement for textile machines. 3,397,529, 8-20-68, Cl. 57—98.
Wolf, John W.: *See*—
Ziemba, Richard T., and Wolf. 3,397,640.
Wolgemuth, James H.: *See*—
Steiner, John C., and Wolgemuth. 3,397,533.
Wolverine World Wide, Inc.: *See*—
Burch, Paul F. 3,397,423.
Wood, Edward L.: *See*—
Aske, Charles B., Jr., and Wood. 3,397,918.
Aske, Charles B., Jr., and Wood. 3,397,920.
Wood, Gar, Industries, Inc.: *See*—
Aske, Charles B., Jr. 3,397,917.
Aske, Charles B., Jr. 3,397,919.
Aske, Charles B., Jr. 3,397,921.
Aske, Charles B., Jr., and Wood. 3,397,918.
Aske, Charles B., Jr., and Wood. 3,397,920.
Wood, Gillies, to The Bentley Engineering Co. Latch needle knitting machines. 3,397,556, 8-20-68, Cl. 66—111.
Wood, Harold S.: *See*—
Gravis, Charles K., III, Wood, and Seipp. 3,397,731.
Woodring, Robert W., to International Harvester Co. Breakaway knife holder. 3,397,525, 8-20-68, Cl. 56—294.
Wuppermann, Theodor, Gesellschaft mit beschrankter Haftung: *See*—
Rietsch, Eberhard. 3,398,254.
Wu, William I. L., and L. A. Giangarra, to The Singer Co. Synchronized, maximum effective frequency, wave conversion system employing time delay pulse generating and synchronizing means, and component of system. 3,398,372, 8-20-68, Cl. 328—28.
Wu, Yao Hua, to Mead Johnson & Co. Azaspirodecanediones and azaspiroundecanediones. 3,398,151, 8-20-68, Cl. 260—268.
Wyard, Walter H., and J. C. Hill, to The Metal Box Co. Ltd. Closuring of containers. 3,397,510, 8-20-68, Cl. 53—341.
Wyman, Dennis G.: *See*—
De Lizasoain, Gabriel V., Martin, and Otano. 3,398,233.
Xerox Corp.: *See*—
Lane, Richard L. 3,397,982.
Martel, Robert W., and Ferguson. 3,398,336.
Yamamoto, Ryuichi, and K. Shima. Complex of thiamine and a styrene-maleic anhydride copolymer. 3,398,226, 8-20-68, Cl. 424—78.
Yardney International Corp.: *See*—
Andre, Henri G. 3,398,026.
Yasufuku, Matami, T. Kawamura, and T. Hayashi, to Fujitsu Ltd. Method of making semiconductor devices by diffusing and forming an oxide. 3,398,029, 8-20-68, Cl. 148—187.
Yevick, John G., and E. F. Brill, to Atomic Power Development Associates, Inc. Nuclear reactor system. 3,398,050, 8-20-68, Cl. 176—17.
Yissum Research Development Co.: *See*—
Ilani, Asher. 3,398,066.
Young, Frank: *See*—
Jones, Burton B. 3,397,686.
Young, Glenn S., and A. Laudel, Jr., to Power Monitors, Inc. Meter apparatus having logarithmic response to current and a linear response to temperature. 3,398,368, 8-20-68, Cl. 324—104.
Young, Robert G.: *See*—
Luek, Otto W., and Young. 3,397,527.
Youngdale, Louis. Self-closing hinge. 3,397,422, 8-20-68, Cl. 16—180.
Youngs, Delmar C., to Dow Corning Corp. Method of bonding silicone elastomers to organic elastomers and product thereof. 3,398,043, 8-20-68, Cl. 161—190.
Youssi, Dale J., to Alsco, Inc. Aluminum wall panel and method of making same. 3,397,561, 8-20-68, Cl. 72—43.
Yu, Edwin K. C., to Radio Corp. of America. Gated flip-flop employing plural transistors and plural capacitors cooperating to minimize flip-flop recovery time. 3,398,300, 8-20-68, Cl. 307—247.
Yuhas, Stephen A., Jr.: *See*—
Rowe, Charles A., Jr., Muessig, and Yuhas. 3,398,107.
Zackheim, Eli A., to Johnson & Johnson. Composite lid. 3,397,-814, 8-20-68, Cl. 220—60.
Zall, David M., to United States of America, Navy. Spor test for titanium in Cu-Ni alloy. 3,379,964, 8-20-68, Cl. 23—230.
Zannini, Enzo, E. Placenza, and G. Fabbri, to Ankerfarm S.p.A. Process for producing tetracycline. 3,398,057, 8-20-68, Cl. 195—80.
Zavitz, Arnold L., and R. D. Vanderveer, to General Dynamics Corp. Pressure-molding apparatus. 3,397,429, 8-20-68, Cl. 18—17.
Zellers, James T., Jr., to Libbey-Owens-Ford Glass Co. Sheet glass apparatus. 3,397,974, 8-20-68, Cl. 65—162.
Zeppieri, Dominick J., to Sprague Electric Co. Electrical component end seal. 3,398,333, 8-20-68, Cl. 317—230.
Zerfoss, Robert W., to General Electric Co. Luminaire with heat shield and support means for the photoelectric control device. 3,398,291, 8-20-68, Cl. 250—239.
Zermati, Albert. Manufacturing a two-ply twist yarn. 3,397,-528, 8-20-68, Cl. 57—58.36.

Ziemba, Richard T., and J. W. Wolf, to General Electric Co. Fuze with improved time delay and self-destruct mechanism. 3,397,640, 8-20-68, Cl. 102—71.
Zierick, Ambrose. Reversible hydraulic transmission. 3,397,-598, 8-20-68, Cl. 74—794.
Zinser-Textilmachinen Gesellschaft mit beschrankter: *See*—
Wolf, Horst. 3,397,529.
Zocher, Josef, to The Singer Co. Needle board for needle felting machines. 3,397,436, 8-20-68, Cl. 28—4.
Zoda, Keiichi: *See*—
Fujita, Yoshimasa, Kuratani, and Zoda. 3,397,426.
Zoller, Egon. Arrangement for picking-up, transmitting and registering signals. 3,398,242, 8-20-68, Cl. 179—18.
Zygmunt, Walter A., and H. P. Browder, to Mead Johnson & Co. Process for producing lysostophin by fermentation. 3,398,056, 8-20-68, Cl. 195—80.

CLASSIFICATION OF PATENTS

ISSUED AUGUST 20, 1968

NOTE.—First number, class; second number, subclass; third number, patent number

2–96	3,397,406
227	3,397,407
4–26	3,397,408
57	3,397,409
77	3,397,410
5–66	3,397,411
8–94.24	3,397,941
127.6	3,397,942
	3,397,943
137.5	3,397,944
139	3,397,945
9–2	3,397,412
8	3,397,413
307	3,397,414
12–86.65	3,397,415
120.5	3,397,416
145	3,397,417
146	3,397,418
13–6	3,398,228
18	3,398,229
15–49	3,397,419
104.3	3,397,420
210	3,397,421
16–180	3,397,422
17–20	3,397,423
18–2	3,397,424
5.3	3,397,425
8	3,397,426
	3,397,427
13	3,397,428
17	3,397,429
23–87	3,397,946
106	3,397,947
	3,397,948
	3,397,949
110	3,397,950
123	3,397,951
129	3,397,957
141	3,397,952
143	3,397,953
149	3,397,954
165	3,397,955
	3,397,956
192	3,397,958
199	3,397,959
206	3,397,960
209.8	3,397,961
213	3,397,962
226	3,397,963
230	3,397,964
	3,397,965
232	3,397,966
357	3,397,967
24–16	3,397,430
125	3,397,431
201	3,397,432
230	3,397,433
255	3,397,434
25–103	3,397,435
28–4	3,397,436
21	3,397,437
29–18	3,397,438
116	3,397,439
157.3	3,397,440
160	3,397,441
182.5	3,397,968
202.5	3,397,442
421	3,397,443
470.1	3,397,444
474.4	3,397,445
570	3,397,446
577	3,397,447
	3,397,448
578	3,397,449
	3,397,450
589	3,397,451
625	3,397,452
630	3,397,453
	3,397,454
30–24	3,397,455
43.9	3,397,456
32–27	3,397,457
33–86	3,397,458
179.5	3,397,459
34–20	3,397,460
45	3,397,461
92	3,397,462
97	3,397,463
99	3,397,464
225	3,397,465
35–9	3,397,466
35	3,397,467
63	3,397,468
37–53	3,397,469
108	3,397,470
129	3,397,471
38–104	3,397,472
42–25	3,397,473
70	3,397,474
71	3,397,475
43–6	3,397,476
15	3,397,477
42.14	3,397,478
44.95	3,397,479
54.5	3,397,480
44–57	3,397,969
62	3,397,970
68	3,397,971
46–86	3,397,481
175	3,397,482
	3,397,484
216	3,397,483
47–47	3,397,485
49–47	3,397,486
130	3,397,487
199	3,397,488
281	3,397,489
482	3,397,490
51–34	3,397,491
219	3,397,492
356	3,397,493
52–122	3,397,494
241	3,397,495
286	3,397,496
334	3,397,497
385	3,397,498
495	3,397,499
	3,397,500
573	3,397,501
693	3,397,502
745	3,397,503
53–26	3,397,504
74	3,397,505
112	3,397,506
	3,397,507
184	3,397,508
285	3,397,509
341	3,397,510
55–196	3,397,511
204	3,397,512
225	3,397,513
233	3,397,514
302	3,397,515
313	3,397,516
400	3,397,517
497	3,397,518
505	3,397,519
56–1	3,397,520
25.4	3,397,521
30	3,397,522
41	3,397,523
290	3,397,524
294	3,397,525
340	3,397,526
364	3,397,527
57–58.36	3,397,528
98	3,397,529
58–112	3,397,530
140	3,397,531
60–13	3,397,532
24	3,397,533
30	3,397,534
39.5	3,397,535
.71	3,397,536
.74	3,397,537
221	3,397,538
250	3,397,539
251	3,397,540
61–13	3,397,541
36	3,397,542
45	3,397,543
	3,397,544
46.5	3,397,545
48	3,397,546
62–20	3,397,547
52	3,397,548
79	3,397,549
140	3,397,550
202	3,397,551
	3,397,552
62–353	3,397,553
65–27	3,397,972
134	3,397,973
162	3,397,974
182	3,397,975
344	3,397,976
66–56	3,397,554
88	3,397,555
111	3,397,556
68–10	3,397,557
198	3,397,558
71–112	3,397,977
	3,397,978
72–5	3,397,559
41	3,397,560
43	3,397,561
54	3,397,562
62	3,397,563
113	3,397,564
129	3,397,565
365	3,397,566
416	3,397,567
453	3,397,568
73–1	3,397,569
3	3,397,570
54	3,397,571
94	3,397,572
170	3,397,573
	3,397,574
194	3,397,575
200	3,397,576
309	3,397,577
386	3,397,578
399	3,397,579
407	3,397,580
	3,397,581
423	3,397,582
432	3,397,583
74–60	3,397,584
75	3,397,585
96	3,397,586
200	3,397,587
376	3,397,588
397	3,397,589
409	3,397,590
410	3,397,591
548	3,397,592
650	3,397,593
677	3,397,594
710.5	3,397,595
731	3,397,596
782	3,397,597
794	3,397,598
75–206	3,397,979
76–107	3,397,599
77–7	3,397,600
81–56	3,397,601
125	3,397,602
83–42	3,397,603
84–1.18	3,398,230
258	3,397,604
88–1	3,397,605
2.7	3,397,606
14	3,397,607
	3,397,608
	3,397,609
	3,397,610
24	3,397,611
	3,397,612
	3,397,613
90–11	3,397,614
	3,397,615
18	3,397,616
91–41	3,397,617
149	3,397,618
175	3,397,619
92–24	3,397,620
48	3,397,621
93–35	3,397,622
36	3,397,623
.3	3,397,624
80	3,397,625
94–8	3,397,626
95–1.7	3,397,627
	3,397,628
10	3,397,629
75	3,397,630
96–1.5	3,397,982
29	3,397,983
50	3,397,980
96–73	3,397,984
91	3,397,985
102	3,397,981
109	3,397,986
	3,397,987
114	3,397,988
	3,397,989
98–36	3,397,631
99–2	3,397,990
17	3,397,991
63	3,397,992
100	3,397,993
116	3,397,994
	3,397,995
118	3,397,996
	3,397,997
123	3,397,998
156	3,397,999
179	3,398,000
193	3,398,001
259	3,397,632
100–93	3,397,633
101–248	3,397,634
102–8	3,397,635
38	3,397,636
	3,397,637
49.4	3,397,638
70	3,397,639
71	3,397,640
79	3,397,641
103–38	3,397,642
46	3,397,643
103	3,397,644
126	3,397,645
149	3,397,646
218	3,397,647
236	3,397,648
104–28	3,397,649
172	3,397,650
244.1	3,397,651
105–193	3,397,652
218	3,397,653
305	3,397,654
106–2	3,398,002
3	3,398,003
48	3,398,004
90	3,398,005
	3,398,006
128	3,398,007
288	3,398,008
307	3,398,009
107–15	3,397,655
108–20	3,397,656
110–8	3,397,657
111–36	3,397,658
112–218	3,397,659
222	3,397,660
113–121	3,397,661
114–74	3,397,662
77	3,397,663
124	3,397,664
208	3,397,665
210	3,397,666
235	3,397,667
115–1	3,397,668
2	3,397,669
70	3,397,670
116–121	3,397,671
117–5.5	3,398,010
65.2	3,398,011
100	3,398,012
106	3,398,013
111	3,398,014
118	3,398,015
119.6	3,398,016
123	3,398,017
124	3,398,018
138	3,398,019
.8	3,398,020
200	3,398,021
118–5	3,397,672
63	3,397,673
200	3,397,674
258	3,397,675
119–15	3,397,676
122–2	3,397,677
7	3,397,678
406	3,397,679
123–11	3,397,680
90	3,397,681
123–119	3,397,682
148	3,397,683
179	3,397,684
124–24	3,397,685
126–59.5	3,397,686
128–15	3,397,687
76	3,397,688
79	3,397,689
130	3,397,690
	3,397,691
132	3,397,692
191	3,397,693
272	3,397,694
285	3,397,695
288	3,397,696
	3,397,697
295	3,397,698
349	3,397,699
131–9	3,397,700
10	3,397,701
183	3,397,702
201	3,397,703
261	3,397,704
266	3,397,705
132–79	3,397,706
	3,397,707
134–6	3,398,022
22	3,398,023
57	3,397,708
132	3,397,709
135–1	3,397,710
136–34	3,398,024
120	3,398,025
178	3,398,026
234	3,398,027
137–62	3,397,711
68	3,397,712
81.5	3,397,713
247.15	3,397,714
387	3,397,715
394	3,397,716
529	3,397,717
605	3,397,718
138–30	3,397,719
149	3,397,720
140–147	3,397,721
143–86	3,397,722
144–309	3,397,723
148–6.31	3,398,028
187	3,398,029
	3,398,030
149–109	3,398,031
150–.5	3,397,724
33	3,397,725
151–37	3,397,726
69	3,397,727
152–158	3,397,728
354	3,397,729
156–5	3,398,032
17	3,398,033
203	3,398,034
244	3,398,035
267	3,398,036
428	3,398,037
492	3,398,038
510	3,398,039
159–13	3,397,730
16	3,397,731
161–45	3,398,040
113	3,398,041
190	3,398,042
	3,398,043
193	3,398,044
208	3,398,045
218	3,398,046
162–48	3,398,047
203	3,398,048
390	3,398,049
164–46	3,397,732
71	3,397,733
73	3,397,734
267	3,397,735
	3,397,736
327	3,397,737
165–10	3,397,738
86	3,397,739
123	3,397,740
152	3,397,741
167	3,397,742
166–42	3,397,743
166–42	3,397,744
57	3,397,745
117.6	3,397,746
172–467	3,397,747
548	3,397,748
173–163	3,397,749
174–15	3,398,231
68.5	3,398,232
110	3,398,233
175–18	3,397,750
341	3,397,751
176–17	3,398,050
45	3,398,051
71	3,398,052
78	3,398,053
178–3	3,398,234
6.6	3,398,235
7.5	3,398,236
.7	3,398,237
.8	3,398,238
66	3,398,239
179–1	3,398,240
	3,398,241
18	3,398,242
	3,398,243
189	3,398,244
180–51	3,397,752
127	3,397,753
181–.5	3,397,754
	3,397,755
33	3,397,756
182–33.5	3,397,757
185–40	3,397,758
188–96	3,397,759
192–107	3,397,760
	3,397,761
193–21	3,397,762
194–4	3,397,763
	3,397,764
59	3,397,765
195–51	3,398,054
66	3,398,055
80	3,398,056
	3,398,057
197–57	3,397,766
181	3,397,767
198–220	3,397,768
200–11	3,398,245
61.4	3,398,246
150	3,398,247
153	3,398,248
157	3,398,250
168	3,398,249
201–15	3,398,058
202–173	3,398,059
203–11	3,398,060
18	3,398,061
78	3,398,062
91	3,398,063
204–1	3,398,064
	3,398,065
	3,398,066
37	3,398,067
61	3,398,068
98	3,398,069
99	3,398,070
130	3,398,071
158	3,398,072
159.13	3,398,073
.15	3,398,074
162	3,398,075
180	3,398,076
	3,398,077
	3,398,078
195	3,398,079
219	3,398,080
286	3,398,081
302	3,398,082
206–20	3,397,769
42	3,397,770
45.11	3,397,771
.14	3,397,772
.33	3,397,773
.34	3,397,774
46	3,397,775
65	3,397,776
	3,397,777
208–87	3,398,083
111	3,398,084
157	3,398,085

208 – 206 :	3,398,086
350 :	3,398,087
209 – 23 :	3,397,778
74 :	3,397,779
137 :	3,397,780
319 :	3,397,781
477 :	3,397,782
210 – 3 :	3,398,088
7 :	3,398,089
19 :	3,398,090
23 :	3,398,091
24 :	3,398,092
54 :	3,398,093
77 :	3,397,783
108 :	3,397,784
125 :	3,397,785
132 :	3,397,786
139 :	3,397,787
195 :	3,397,788
201 :	3,397,789
321 :	3,397,790
	3,397,791
370 :	3,397,792
457 :	3,397,793
488 :	3,397,794
211 – 60 :	3,397,795
73 :	3,397,796
103 :	3,397,797
213 – 22 :	3,397,798
214 – 1 :	3,397,799
11 :	3,397,800
17 :	3,397,801
38 :	3,397,802
215 – 95 :	3,397,803
219 – 10.41:	3,398,251
.61:	3,398,252
69 :	3,398,253
97 :	3,398,254
108 :	3,398,255
146 :	3,398,256
	3,398,257
155 :	3,398,258
216 :	3,398,259
247 :	3,398,260
285 :	3,398,261
301 :	3,398,262
347 :	3,398,263
454 :	3,398,264
220 – 20 :	3,397,804
23.86:	3,397,805
32 :	3,397,806
42 :	3,397,807
44 :	3,397,808
48 :	3,397,809
53 :	3,397,810
54 :	3,397,811
	3,397,812
55 :	3,397,813
60 :	3,397,814
67 :	3,397,815
81 :	3,397,816
221 – 150 :	3,397,817
232 :	3,397,818
222 – 3 :	3,397,819
83 :	3,397,820
92 :	3,397,821
402.13:	3,397,822
480 :	3,397,823
570 :	3,397,824
225 – 3 :	3,397,825
226 – 1 :	3,397,826
59 :	3,397,827
227 – 130 :	3,397,828
229 – 4.5 :	3,397,829
7 :	3,397,830
14 :	3,397,831
37 :	3,397,832

229 – 51 :	3,397,833
	3,397,834
66 :	3,397,835
230 – 114 :	3,397,836
235 – 60.24:	3,397,837
70 :	3,397,838
91 :	3,397,839
92 :	3,398,265
120 :	3,397,840
150.2 :	3,398,266
.26:	3,398,267
.27:	3,398,268
181 :	3,398,269
237 – 8 :	3,397,841
239 – 206 :	3,397,842
453 :	3,397,843
240 – 3 :	3,398,270
10.63:	3,398,271
41.35:	3,398,272
93 :	3,398,273
103 :	3,398,274
241 – 21 :	3,397,844
43 :	3,397,845
286 :	3,397,846
242 – 7 :	3,397,847
56.2 :	3,397,848
107.4 :	3,397,849
158 :	3,397,850
244 – 3.21:	3,397,851
12 :	3,397,852
23 :	3,397,853
55 :	3,397,854
246 – 34 :	3,398,275
182 :	3,398,276
248 – 5 :	3,397,855
22 :	3,397,856
63 :	3,397,857
249 – 18 :	3,397,858
250 – 43.5 :	3,398,277
71.5 :	3,398,278
83.3 :	3,398,279
	3,398,280
	3,398,281
.6 :	3,398,282
202 :	3,398,283
203 :	3,398,284
217 :	3,398,285
218 :	3,398,286
220 :	3,398,287
222 :	3,398,288
238 :	3,398,289
239 :	3,398,290
	3,398,291
251 – 11 :	3,397,859
61.1 :	3,397,860
175 :	3,397,861
204 :	3,397,862
285 :	3,397,863
252 – 8.55:	3,398,094
47.5 :	3,398,095
95 :	3,398,096
152 :	3,398,097
301.1 :	3,398,098
.2 :	3,398,099
435 :	3,398,100
466 :	3,398,101
253 – 46 :	3,397,864
77 :	3,397,865
256 – 22 :	3,397,866
259 – 1 :	3,397,867
8 :	3,397,868
108 :	3,397,869
260 – 2 :	3,398,102
.5 :	3,398,103
	3,398,104
	3,398,105
18 :	3,398,106

260 – 19 :	3,398,107
23 :	3,398,108
29.4 :	3,398,109
33.4 :	3,398,110
.6 :	3,398,111
37 :	3,398,112
41 :	3,398,113
45.75:	3,398,114
.85:	3,398,115
	3,398,116
46.5 :	3,398,117
	3,398,118
47 :	3,398,119
	3,398,120
	3,398,121
50 :	3,398,122
73 :	3,398,123
75 :	3,398,124
78.4 :	3,398,125
.5 :	3,398,126
79.3 :	3,398,127
87.7 :	3,398,128
93.7 :	3,398,129
	3,398,130
94.9 :	3,398,131
145 :	3,398,132
153 :	3,398,133
157 :	3,398,134
205 :	3,398,135
207 :	3,398,136
	3,398,137
210.5 :	3,398,138
239 :	3,398,139
.5 :	3,398,140
	3,398,141
.55:	3,398,142
240 :	3,398,143
	3,398,144
.4 :	3,398,145
243 :	3,398,146
247.2 :	3,398,147
249.5 :	3,398,148
252 :	3,398,149
256 :	3,398,150
268 :	3,398,151
288 :	3,398,152
294.9 :	3,398,153
295 :	3,398,154
	3,398,155
296 :	3,398,156
302 :	3,398,157
310 :	3,398,158
326.5 :	3,398,159
327 :	3,398,160
330.5 :	3,398,161
340.6 :	3,398,162
404 :	3,398,163
.5 :	3,398,164
410 :	3,398,165
413 :	3,398,166
429 :	3,398,167
	3,398,168
.7 :	3,398,169
439 :	3,398,170
448.2 :	3,398,171
	3,398,172
	3,398,173
	3,398,174
	3,398,175
	3,398,176
	3,398,177
	3,398,178
	3,398,179
453 :	3,398,180
455 :	3,398,181
	3,398,182
458 :	3,398,183

260 – 486 :	3,398,184
502 :	3,398,185
515 :	3,398,186
519 :	3,398,187
521 :	3,398,188
551 :	3,398,189
	3,398,190
555 :	3,398,191
566 :	3,398,192
576 :	3,398,193
577 :	3,398,194
583 :	3,398,195
	3,398,196
584 :	3,398,197
	3,398,198
604 :	3,398,199
609 :	3,398,200
615 :	3,398,201
653 :	3,398,202
.3 :	3,398,203
654 :	3,398,204
666 :	3,398,205
671 :	3,398,206
	3,398,207
674 :	3,398,208
680 :	3,398,209
827 :	3,398,210
830 :	3,398,211
860 :	3,398,212
863 :	3,398,213
876 :	3,398,214
261 – 19 :	3,397,870
75 :	3,397,871
110 :	3,397,872
263 – 21 :	3,397,873
40 :	3,397,874
264 – 3 :	3,398,215
24 :	3,398,216
45 :	3,398,217
	3,398,218
102 :	3,398,219
147 :	3,398,220
223 :	3,398,221
250 :	3,398,222
282 :	3,398,223
321 :	3,398,224
266 – 5 :	3,397,875
22 :	3,397,876
30 :	3,397,877
41 :	3,397,878
269 – 91 :	3,397,879
240 :	3,397,880
272 – 33 :	3,397,881
63 :	3,397,882
70.3 :	3,397,883
83 :	3,397,884
273 – 26 :	3,397,885
54 :	3,397,886
58 :	3,397,887
80.1 :	3,397,888
82 :	3,397,889
135 :	3,397,890
162 :	3,397,891
190 :	3,397,892
277 – 24 :	3,397,893
30 :	3,397,894
280 – 6 :	3,397,895
104.5 :	3,397,896
124 :	3,397,897
150 :	3,397,898
432 :	3,397,899
478 :	3,397,900
285 – 161 :	3,397,901
206 :	3,397,902
287 – 101 :	3,397,903
189.36:	3,397,904
292 – 5 :	3,397,905

292 – 29 :	3,397,906
294 – 81 :	3,397,907
296 – 23 :	3,397,908
	3,397,909
35 :	3,397,910
297 – 216 :	3,397,911
355 :	3,397,912
385 :	3,397,913
456 :	3,397,914
299 – 1 :	3,397,915
37 :	3,397,916
301 – 37 :	3,397,917
	3,397,918
	3,397,919
	3,397,920
	3,397,921
302 – 2 :	3,397,922
37 :	3,397,923
303 – 13 :	3,397,924
29 :	3,397,925
306 – 30 :	3,397,926
307 – 51 :	3,398,292
88 :	3,398,293
.3 :	3,398,294
141.4 :	3,398,295
207 :	3,398,296
220 :	3,398,297
235 :	3,398,298
245 :	3,398,299
247 :	3,398,300
299 :	3,398,301
308 – 2 :	3,397,927
8.2 :	3,397,928
10 :	3,397,929
41 :	3,397,930
141 :	3,397,931
176 :	3,397,932
181 :	3,397,933
310 – 14 :	3,398,302
22 :	3,398,303
61 :	3,398,304
104 :	3,398,305
258 :	3,398,306
312 – 351 :	3,397,934
313 – 60 :	3,398,307
62 :	3,398,308
85 :	3,398,309
108 :	3,398,310
	3,398,311
225 :	3,398,312
315 – 3.5 :	3,398,313
	3,398,314
	3,398,315
10 :	3,398,316
12 :	3,398,317
27 :	3,398,318
	3,398,319
	3,398,320
39 :	3,398,321
150 :	3,398,322
317 – 15 :	3,398,323
16 :	3,398,324
31 :	3,398,325
101 :	3,398,326
103 :	3,398,327
123 :	3,398,328
136 :	3,398,329
148.5 :	3,398,330
149 :	3,398,331
230 :	3,398,332
	3,398,333
234 :	3,398,334
235 :	3,398,335
	3,398,337
258 :	3,398,338
260 :	3,398,339

317 – 260 :	3,398,340
262 :	3,398,336
318 – 18 :	3,398,341
	3,398,342
212 :	3,398,343
252 :	3,398,344
341 :	3,398,345
460 :	3,398,346
320 – 25 :	3,398,347
321 – 5 :	3,398,348
	3,398,349
	3,398,350
11 :	3,398,351
45 :	3,398,352
322 – 17 :	3,398,353
323 – 6 :	3,398,354
324 – .5 :	3,398,355
6 :	3,398,356
28 :	3,398,357
29 :	3,398,358
34 :	3,398,359
43 :	3,398,360
58 :	3,398,361
61 :	3,398,362
73 :	3,398,363
77 :	3,398,364
	3,398,365
78 :	3,398,366
103 :	3,398,367
104 :	3,398,368
119 :	3,398,369
325 – 486 :	3,398,370
328 – 9 :	3,398,371
28 :	3,398,372
163 :	3,398,373
165 :	3,398,374
233 :	3,398,375
330 – 4.3 :	3,398,376
331 – 16 :	3,398,377
76 :	3,398,378
94.5 :	3,398,379
109 :	3,398,380
332 – 19 :	3,398,381
29 :	3,398,382
	3,398,383
335 – 207 :	3,398,384
210 :	3,398,385
336 – 135 :	3,398,386
339 – 5 :	3,398,387
49 :	3,398,388
65 :	3,398,389
91 :	3,398,390
94 :	3,398,391
117 :	3,398,392
246 :	3,398,393
340 – 7 :	3,398,394
15.5 :	3,398,395
	3,398,396
52 :	3,398,397
58 :	3,398,398
82 :	3,398,399
146.1 :	3,398,400
147 :	3,398,401
172.5 :	3,398,402
	3,398,403
	3,398,404
	3,398,405
350 – 71 :	3,397,935
161 :	3,397,936
352 – 169 :	3,397,937
401 – 198 :	3,397,938
	3,397,939
424 – 34 :	3,398,225
78 :	3,398,226
162 :	3,398,227
431 – 28 :	3,397,940

Classification of Designs

D 2 – 393 :	211,975
D 4 – 26 :	211,976
D 9 – 139 :	211,978
199 :	211,977
264 :	211,979
D13 – 1 :	211,980
D14 – 3 :	211,981
	211,982
6 :	211,987
D15 – 1 :	211,983
3 :	211,984
	211,985
	211,986
8 :	211,988
D22 – 19 :	211,989
31 :	211,990

D23 – 3 :	211,991
6 :	211,992
93 :	211,993
150 :	211,994
D26 – 12 :	211,995
13 :	211,996
14 :	211,997
	211,998
	211,999
	212,000
	212,001
	212,002
	212,003
	212,004
	212,005
	212,006

D26 – 15 :	212,007
D29 – 1 :	212,008
D30 – 41 :	212,009
D33 – 1 :	212,011
10 :	212,012
31 :	212,010
D34 – 2 :	212,013
	212,014
	212,015
5 :	212,016
	212,018
	212,019
	212,020
	212,021
14 :	212,022
15 :	212,017

D36 – 2 :	212,023
8 :	212,024
D39 – 1 :	212,025
D42 – :	212,032
7 :	212,026
	212,027
	212,028
	212,029
	212,030
	212,031
D44 – 1 :	212,033
	212,034
21 :	212,035
D46 – 1 :	212,036
D48 – 2 :	212,037
20 :	212,038

D49 – 1 :	212,039
14.3 :	212,040
D52 – 2 :	212,041
6 :	212,042
7 :	212,043
D54 – 2 :	212,044
D56 – 4 :	212,045
	212,046
D57 – 1 :	212,047
	212,048
D59 – 2 :	212,049
D61 – 1 :	212,050
	212,051
	212,052
	212,053
	212,054

D61 – 1 :	212,055
D64 – 11 :	212,056
	212,057
	212,058
	212,059
	212,060
D70 – 1 :	212,061
D74 – 10 :	212,062
D80 – 9 :	212,063
D83 – 1 :	212,064
D85 – 2 :	212,065
D86 – 10 :	212,066
	212,067
	212,068
D90 – 1 :	212,069

Classification of Plants

P. – 18 :	2,829	P. – 20 :	2,828

GEOGRAPHICAL INDEX OF RESIDENCE OF INVENTORS

(U.S. States, Territories and Armed Forces, the Commonwealth of Puerto Rico, and the Canal Zone)

(NOTE.—CODES ARE CHANGED AS OF JANUARY 1, 1967)

Alabama	1	Kentucky	21	Oregon	41
Alaska	2	Louisiana	22	Pennsylvania	42
American Samoa	3	Maine	23	Puerto Rico	43
Arizona	4	Maryland	24	Rhode Island	44
Arkansas	5	Massachusetts	25	South Carolina	45
California	6	Michigan	26	South Dakota	46
Canal Zone	7	Minnesota	27	Tennessee	47
Colorado	8	Mississippi	28	Texas	48
Connecticut	9	Missouri	29	Utah	49
Delaware	10	Montana	30	Vermont	50
District of Columbia	11	Nebraska	31	Virginia	51
Florida	12	Nevada	32	Virgin Islands	52
Georgia	13	New Hampshire	33	Washington	53
Guam	14	New Jersey	34	West Virginia	54
Hawaii	15	New Mexico	35	Wisconsin	55
Idaho	16	New York	36	Wyoming	56
Illinois	17	North Carolina	37	U.S. Air Force	57
Indiana	18	North Dakota	38	U.S. Army	58
Iowa	19	Ohio	39	U.S. Navy	59
Kansas	20	Oklahoma	40		

(First number in listing denotes location according to above key. Refer to patent number in body of the Official Gazette to obtain details as to inventor name, location, etc.)

PATENTS

1 :	3,397,668
	3,397,732
	3,398,341
4 :	3,397,641
	3,397,694
	3,398,031
	3,398,290
5 :	3,397,491
	3,397,646
	3,397,821
6 :	3,397,408
	3,397,414
	3,397,422
	3,397,429
	3,397,432
	3,397,433
	3,397,434
	3,397,439
	3,397,449
	3,397,450
	3,397,476
	3,397,484
	3,397,486
	3,397,495
	3,397,504
	3,397,540
	3,397,541
	3,397,564
	3,397,573
	3,397,586
	3,397,588
	3,397,601
	3,397,605
	3,397,631
	3,397,632
	3,397,638
	3,397,643
	3,397,681
	3,397,685
	3,397,687
	3,397,710
	3,397,720
	3,397,727
	3,397,745
	3,397,746
	3,397,759
	3,397,767
	3,397,770
	3,397,779
	3,397,785
6 :	3,397,790
	3,397,794
	3,397,800
	3,397,819
	3,397,840
	3,397,859
	3,397,862
	3,397,870
	3,397,887
	3,397,900
	3,397,924
	3,397,936
	3,397,937
	3,397,968
	3,397,980
	3,397,991
	3,397,999
	3,398,002
	3,398,014
	3,398,021
	3,398,079
	3,398,080
	3,398,097
	3,398,098
	3,398,130
	3,398,198
	3,398,213
	3,398,217
	3,398,234
	3,398,241
	3,398,245
	3,398,247
	3,398,251
	3,398,297
	3,398,307
	3,398,310
	3,398,313
	3,398,317
	3,398,328
	3,398,334
	3,398,337
	3,398,346
	3,398,352
	3,398,365
	3,398,373
	3,398,375
	3,398,384
	3,398,404
	3,398,405
8 :	3,397,695
8 :	3,397,876
9 :	3,397,474
	3,397,609
	3,397,633
	3,397,642
	3,397,679
	3,397,763
	3,397,764
	3,397,771
	3,397,856
	3,397,894
	3,397,990
	3,398,011
	3,398,015
	3,398,028
	3,398,036
	3,398,048
	3,398,084
	3,398,088
	3,398,181
	3,398,193
	3,398,228
	3,398,262
	3,398,326
	3,398,372
	3,398,376
	3,398,381
	3,398,403
10 :	3,397,465
	3,397,953
	3,398,111
	3,398,123
	3,398,167
11 :	3,397,407
	3,397,512
12 :	3,397,477
	3,397,537
	3,397,597
	3,397,669
	3,397,683
	3,397,711
	3,397,718
	3,397,783
	3,397,789
	3,397,803
	3,397,820
	3,397,909
	3,398,246
	3,398,257
	3,398,340
12 :	3,398,361
13 :	3,397,506
	3,397,623
	3,397,748
	3,397,998
	3,398,166
17 :	3,397,406
	3,397,421
	3,397,441
	3,397,456
	3,397,464
	3,397,471
	3,397,488
	3,397,499
	3,397,500
	3,397,501
	3,397,507
	3,397,513
	3,397,519
	3,397,520
	3,397,525
	3,397,595
	3,397,627
	3,397,628
	3,397,645
	3,397,651
	3,397,652
	3,397,653
	3,397,658
	3,397,661
	3,397,715
	3,397,734
	3,397,747
	3,397,752
	3,397,761
	3,397,768
	3,397,778
	3,397,786
	3,397,793
	3,397,798
	3,397,810
	3,397,811
	3,397,824
	3,397,858
	3,397,860
	3,397,868
	3,397,871
	3,397,883
	3,397,893
	3,397,895
17 :	3,397,903
	3,397,905
	3,397,906
	3,397,923
	3,397,925
	3,397,930
	3,397,934
	3,397,952
	3,397,977
	3,397,978
	3,397,992
	3,397,993
	3,397,994
	3,397,995
	3,398,047
	3,398,063
	3,398,065
	3,398,083
	3,398,086
	3,398,095
	3,398,131
	3,398,155
	3,398,170
	3,398,196
	3,398,197
	3,398,203
	3,398,208
	3,398,244
	3,398,259
	3,398,295
	3,398,309
	3,398,388
	3,398,393
	3,398,398
18 :	3,397,566
	3,397,569
	3,397,602
	3,397,610
	3,397,804
	3,397,831
	3,397,836
	3,397,864
	3,397,907
	3,398,056
	3,398,151
	3,398,319
	3,398,320
	3,398,350
	3,398,399
19 :	3,397,522
19 :	3,397,523
	3,397,585
	3,397,898
	3,397,899
	3,398,249
	3,398,267
20 :	3,397,634
	3,397,665
	3,397,884
	3,398,368
21 :	3,397,551
	3,397,553
	3,397,667
	3,398,023
	3,398,112
22 :	3,397,975
	3,398,171
	3,398,204
	3,398,205
23 :	3,398,049
	3,398,224
24 :	3,397,419
	3,397,469
	3,397,574
	3,397,664
	3,397,807
	3,397,851
	3,397,964
	3,398,007
	3,398,025
	3,398,050
	3,398,125
	3,398,233
	3,398,252
	3,398,266
	3,398,330
	3,398,370
	3,398,374
25 :	3,397,413
	3,397,417
	3,397,457
	3,397,487
	3,397,579
	3,397,608
	3,397,698
	3,397,773
	3,397,939
	3,397,961
	3,398,009
	3,398,034

Code	Patent numbers
25	3,398,040 3,398,069 3,398,091 3,398,093 3,398,099 3,398,109 3,398,270 3,398,279 3,398,284 3,398,321 3,398,331 3,398,333 3,398,339 3,398,353 3,398,382 3,398,383
26	3,397,423 3,397,428 3,397,431 3,397,447 3,397,448 3,397,475 3,397,478 3,397,479 3,397,517 3,397,533 3,397,534 3,397,538 3,397,587 3,397,593 3,397,594 3,397,603 3,397,650 3,397,674 3,397,733 3,397,799 3,397,808 3,397,879 3,397,885 3,397,908 3,397,917 3,397,918 3,397,919 3,397,920 3,397,921 3,397,927 3,398,000 3,398,004 3,398,017 3,398,018 3,398,033 3,398,035 3,398,043 3,398,044 3,398,104 3,398,113 3,398,177 3,398,178 3,398,179 3,398,210 3,398,248 3,398,253 3,398,329
27	3,397,455 3,397,458 3,397,546 3,397,582 3,397,613 3,397,622 3,397,750 3,397,816 3,397,832 3,397,844 3,397,880 3,397,902 3,398,072 3,398,092 3,398,164
27	3,398,175 3,398,182 3,398,237 3,398,354
28	3,397,542 3,397,545
29	3,397,600 3,397,659 3,397,703 3,397,728 3,397,760 3,397,777 3,397,809 3,397,834 3,397,877 3,397,914 3,397,947 3,397,948 3,397,949 3,398,019 3,398,218 3,398,343 3,398,360
31	3,397,437
32	3,397,946
33	3,397,482 3,398,272
34	3,397,430 3,397,442 3,397,444 3,397,446 3,397,483 3,397,485 3,397,493 3,397,562 3,397,599 3,397,619 3,397,625 3,397,637 3,397,702 3,397,704 3,397,712 3,397,721 3,397,756 3,397,776 3,397,788 3,397,812 3,397,814 3,397,822 3,397,827 3,397,853 3,397,878 3,397,886 3,397,926 3,397,954 3,397,970 3,398,008 3,398,037 3,398,045 3,398,055 3,398,062 3,398,067 3,398,071 3,398,073 3,398,075 3,398,078 3,398,085 3,398,087 3,398,102 3,398,107 3,398,119 3,398,121 3,398,128 3,398,139 3,398,156 3,398,157 3,398,159 3,398,180
34	3,398,186 3,398,189 3,398,200 3,398,206 3,398,215 3,398,216 3,398,219 3,398,220 3,398,221 3,398,225 3,398,231 3,398,239 3,398,275 3,398,298 3,398,300 3,398,312 3,398,316 3,398,318 3,398,345 3,398,364 3,398,369
35	3,398,288 3,398,322
36	3,397,410 3,397,438 3,397,467 3,397,468 3,397,505 3,397,508 3,397,515 3,397,547 3,397,549 3,397,560 3,397,578 3,397,580 3,397,598 3,397,621 3,397,630 3,397,648 3,397,654 3,397,662 3,397,680 3,397,690 3,397,691 3,397,701 3,397,706 3,397,707 3,397,725 3,397,726 3,397,736 3,397,738 3,397,739 3,397,740 3,397,757 3,397,791 3,397,826 3,397,830 3,397,838 3,397,889 3,397,896 3,397,911 3,397,913 3,397,938 3,397,962 3,397,981 3,397,982 3,397,984 3,397,986 3,397,987 3,398,016 3,398,022 3,398,032 3,398,058 3,398,076 3,398,110 3,398,114 3,398,115 3,398,116
36	3,398,120 3,398,122 3,398,126 3,398,140 3,398,143 3,398,173 3,398,211 3,398,238 3,398,263 3,398,264 3,398,269 3,398,285 3,398,314 3,398,315 3,398,335 3,398,336 3,398,377 3,398,379 3,398,391 3,398,397 3,398,401
37	3,397,427 3,397,558 3,397,624 3,397,723 3,397,749 3,397,829 3,397,847 3,397,881 3,397,929 3,397,933 3,398,230 3,398,273 3,398,274 3,398,291 3,398,367
39	3,397,420 3,397,445 3,397,461 3,397,561 3,397,563 3,397,614 3,397,615 3,397,626 3,397,639 3,397,644 3,397,660 3,397,688 3,397,692 3,397,708 3,397,717 3,397,722 3,397,737 3,397,765 3,397,805 3,397,823 3,397,833 3,397,857 3,397,863 3,397,873 3,397,892 3,397,897 3,397,957 3,397,973 3,397,996 3,397,997 3,398,010 3,398,013 3,398,038 3,398,068 3,398,209 3,398,222 3,398,250 3,398,281 3,398,292 3,398,306 3,398,323 3,398,347
39	3,398,349 3,398,366 3,398,371
40	3,397,481 3,397,521 3,397,647 3,397,682 3,397,724 3,397,731 3,397,825 3,397,861 3,397,956 3,397,969 3,398,003 3,398,077 3,398,227 3,398,392
41	3,397,590 3,397,888
42	3,397,409 3,397,435 3,397,451 3,397,453 3,397,454 3,397,509 3,397,511 3,397,527 3,397,567 3,397,575 3,397,584 3,397,656 3,397,671 3,397,672 3,397,678 3,397,735 3,397,744 3,397,769 3,397,784 3,397,792 3,397,806 3,397,815 3,397,874 3,397,875 3,397,891 3,397,945 3,397,966 3,397,979 3,398,041 3,398,059 3,398,090 3,398,101 3,398,163 3,398,165 3,398,174 3,398,188 3,398,199 3,398,201 3,398,207 3,398,229 3,398,232 3,398,256 3,398,305 3,398,311 3,398,325 3,398,344 3,398,348 3,398,357
45	3,397,869 3,398,064 3,398,278
47	3,397,676 3,397,705 3,398,020 3,398,152 3,398,212
48	3,397,526 3,397,570 3,397,583
48	3,397,655 3,397,686 3,397,729 3,397,741 3,397,743 3,397,751 3,397,754 3,397,755 3,397,758 3,397,795 3,397,928 3,398,100 3,398,129 3,398,185 3,398,261 3,398,324 3,398,390 3,398,394 3,398,395 3,398,396
49	3,397,473 3,397,850
50	3,397,640 3,397,730
51	3,397,494 3,397,502 3,397,552 3,397,572 3,397,581 3,397,675 3,397,700 3,397,713 3,397,772 3,397,796 3,397,802 3,397,848 3,397,866 3,397,890 3,397,922 3,397,932 3,398,240 3,398,277 3,398,356 3,398,387
53	3,397,470 3,397,472 3,397,492 3,397,496 3,397,618 3,397,699 3,397,813 3,397,849 3,397,901 3,397,965 3,398,005 3,398,006 3,398,280 3,398,287
54	3,397,801 3,397,974 3,398,106
55	3,397,497 3,397,550 3,397,620 3,397,666 3,397,673 3,397,696 3,397,697 3,397,775 3,397,846 3,397,872 3,398,001 3,398,255 3,398,260 3,398,338 3,398,378
56	3,398,094

Design Patents

Code	Patent numbers
6	211,987 211,994 212,001 212,003 212,005 212,006 212,010 212,013 212,014 212,015 212,017 212,018 212,041 212,044
6	212,061 212,067
9	212,011 212,063 212,065 212,066
11	212,008 212,037
12	211,993 212,002
17	211,975 211,983 211,992
17	211,995 212,027 212,028 212,029 212,030 212,031 212,032 212,034 212,054 212,055
18	211,996 212,045 212,046
25	212,051
26	211,982 211,989 212,012 212,020
27	212,004 212,025 212,036
34	211,999 212,047
36	211,977 211,984 212,007
36	212,009 212,026 212,042 212,048 212,049 212,053 212,057
37	211,980
39	211,976 211,981 212,022 212,023 212,024
39	212,035 212,039 212,062
42	212,016 212,052
44	212,033 212,064
48	211,990 212,068
51	211,988
53	212,021
55	211,978 212,043

Plant Patents

Code	Patent numbers
6	2,829

U.S. DEPARTMENT OF COMMERCE

OFFICIAL GAZETTE of the UNITED STATES PATENT OFFICE

August 20, 1968 Volume 853 Number 3

TRADEMARKS

NOTICES

Official Mailing Address

The official mailing address for all communications sent to the Patent Office remains:

Commissioner of Patents
Washington, D.C. 20231

The physical location of the Office is 2021 Jefferson Davis Highway, Arlington, Va. This address should not be used on mail sent to the Patent Office.

C. A. KALK,
Director of Administration.

June 25, 1968.

United States Adopted Names

LIST NO. 20

March 1, 1968 to June 30, 1968

The following nonproprietary names for the drugs described have been adopted by the USAN Council (the nomenclature committee sponsored by the American Medical Association, the American Pharmaceutical Association, and the United States Pharmacopeial Convention) in cooperation with the interested manufacturers. The designation "United States Adopted Names" (USAN) has been coined to distinguish these formally adopted nonproprietary names from other nonproprietary names. Adoption of such names does not imply endorsement of the products involved by the A.M.A. Council on Drugs, the United States Pharmacopeia, or the National Formulary.

Any comments or suggestions should be addressed to Doctor Joseph B. Jerome, Secretary, United States Adopted Names Council, American Medical Association, 535 N. Dearborn St., Chicago, Ill., 60610.

benzoctamine hydrochloride: psychopharmacologic agent (sedative; muscle relaxant)
betamethasone benzoate: topical anti-inflammatory
boldenone undecylenate: anabolic (long-acting)
carbenicillin potassium sodium: antibiotic
cirolemycin: antineoplastic
clogestone acetate: progestogen
clomegestone acetate: progestogen
clopidol: poultry coccidiostat
crufomate: kills internal and external parasites of livestock
danazol: anterior pituitary suppressant
decoquinate: poultry coccidiostat
dexivacaine: anesthetic
fluprednisolone valerate: anti-inflammatory
furazosin hydrochloride: antihypertensive
guanadrel sulfate: antihypertensive
iodamide: radiopaque medium
lomofungin: antifungal antibiotic
metoserpate hydrochloride: veterinary antianxiety
mianserin hydrochloride: antiserotonin; antihistamine
mitotane: antineoplastic
nivazol: glucocorticoid

CONDITION OF TRADEMARK APPLICATIONS AS OF JUNE 30, 1968

Total number of applications awaiting action [excluding renewals and Sec. 12(c)]	15,157
Date of oldest new application	Feb. 9, 1967
Date of oldest amended application (filing date)	Oct. 23, 1965

C. M. WENDT, Director, Trademark Examining Operation — TRADEMARK EXAMINING DIVISIONS, EXAMINERS AND TRADEMARK CLASSES UNDER EXAMINATION	Oldest Application: New	Oldest Application: Amended
(I) L. J. BETTENDORF, Classes 2, 3, 4, 5, 7, 9, 10, 11, 27, 28, 30, 32, 33, 37, 38, 39, 40, 41, 42, 43, 50; Certification Marks, Classes A and B	6-27-67	11-8-65
(II) F. H. WETHERBEE, Classes 1, 6, 15, 18, 45, 46, 47, 48, 49, 51, 52; Collective Membership Mark, Class 200	9-28-67	12-1-65
(III) P. S. BALL, Classes 19, 21, 23, 26, 31, 34, 35, 36	10-2-67	10-23-65
(IV) M. E. ABRAMSON, Classes 8, 12, 13, 14, 16, 17, 20, 22, 24, 25, 29, 44; Service Marks, Classes 100, 101, 102, 103, 104, 105, 106, and 107	2-9-67	3-25-66
Renewals (All Classes)	6-4-68	....
Sec. 12(c) Publications (All Classes)	5-31-68	....

Applications filed during the month of June 1968—2,280

Registrations Issued	420—No. 854,925 to No. 855,344
Renewals Issued	100

The TRADEMARK SECTION of the OFFICIAL GAZETTE, issued weekly, is mailed under the direction of the Superintendent of Documents, Government Printing Office, Washington, D.C. 20402 to whom all subscriptions should be made payable and all communications addressed; subscription price $12.00 per annum, foreign mailing $4.00 additional; single copies, 25 cents each.

PRINTED COPIES OF TRADEMARK REGISTRATIONS are furnished by the Patent Office for 20 cents each. Address orders to the Commissioner of Patents, Washington, D.C. 20231.

ormetein: anti-inflammatory
oxprenolol hydrochloride: coronary dilator
poncuronium bromide: neuro-muscular blocking agent; peripheral muscle relaxant
pyrrolnitrin: antifungal
ranimycin: antibacterial antibiotic
salethamide maleate: analgesic
steffimycin: antibiotic
sulfadoxine: antibacterial sulfonamide

Trademark Suits

Notices under 15 U.S.C. 1116; Trademark Act of July 5, 1946

Reg. No. 400,258 (CROWN DESIGN), Canada Dry Corporation, Nonalcoholic maltless beverages; **Reg. No. 413,707** (CANADA DRY SPUR AND DESIGN), same, Non-alcoholic maltless, carbonated beverages; **Reg. No. 441,922** (WINK), same, Non-alcoholic, non-cereal, maltless carbonated beverages, sold as soft drinks, and syrups and extracts for making the same; **Reg. No. 513,120** (CANADA DRY), Canada Dry Ginger Ale, Incorporated, Non-alcoholic, maltless beverages sold as soft drinks and extracts, syrups, and concentrates for making the same; **Reg. No. 527,210**, same, Carbonated water; **Reg. No. 777,103** (CANADA DRY WINK AND DESIGN), Canada Dry Corporation, Maltless soft drinks; **Reg. No. 819,993** (CANADA DRY AND DESIGN), same, Carbonated beverages used as soft drinks and as mixers, **filed** Apr. 5, 1967, D.C., E.D. Tex (Sherman), Doc. 445, *Canada Dry Corporation v. Ruth Barnes Smith and James M. McKinney, doing business as Dr. Pepper Bottling Company.* Final judgment, defendants permanently restrained and enjoined from using above listed trademarks belonging to plaintiff, May 1, 1968.

Reg. No. 413,707. (See Reg. No. 400,258.)

Reg. No. 441,922. (See Reg. No. 400,258.)

Reg. No. 513,120. (See Reg. No. 400,258.)

Reg. No. 527,210. (See Reg. No. 400,258.)

Reg. No. 603,047 (LONDON FOG), The Londontown Manufacturing Company, Raincoats for men, women and children, **filed** May 21, 1968, D.C., S.D.N.Y., Doc. 68-C-2087, *The Londontown Manufacturing Company v. Cable Raincoat Company.*

Reg. No. 635,545 (POPPIT), The Richelieu Corporation, Beads, necklaces, bracelets, and ear clips, **filed** May 16, 1968, D.C., S.D.N.Y., Doc. 68-C-2001, *Richelieu Licensing Corp. v. F. A. C. Schwartz.*

Reg. No. 656,005 (PILO 1), Broemmel Pharmaceuticals, Ophthalmic solution, **filed** May 22, 1968, D.C., N.D. Calif. (San Francisco), Doc. 49287, *Broemmel Pharmaceuticals v. Smith, Miller & Patch, Inc.*

Reg. No. 721,138 (SHAKEY'S), Johnson, Plummer & Associates, Restaurant services, featuring pizzas, **filed** May 20, 1968, D.C., S.D. Tex. (Houston), Doc. 68-H-437, *Shakey's Incorporated v. Edward Jungbluth et al.* Final judgment in favor of the plaintiff; defendants permanently enjoined, May 22, 1968.

Reg. No. 777,103. (See Reg. No. 400,258.)

Reg. No. 791,172 (BONANZA SIRLOIN PIT), International Franchise Corporation, Restaurant services, **filed** May 2, 1968, D.C., S.D. Fla (Miami), Doc. 68-521-C-WM, *Bonanza International, Inc. v. Bonanza Sirloin Pit Corp.*

Reg. No. 801,100 (A TO Z), A to Z Rental, Inc., Service of renting tools, equipment, and vehicles, **filed** Dec. 6, 1967, D.C. Ariz. (Phoenix), Doc. C-6529-Phx., *A to Z Rental, Inc. v. Fred L. Matricardi, doing business as A to Z Rents.*

Reg. No. 819,993. (See Reg. No. 400,258.)

MARKS PUBLISHED FOR OPPOSITION

SECTION 1

The following marks are published in compliance with section 12(a) of the Trademark Act of 1946. Application for the registration of these marks in more than one class has been filed as provided in section 30 of said act as amended by Public Law 772, 87th Congress, approved Oct. 9, 1962, 76 Stat. 769. Opposition under section 13 may be filed within thirty days of this publication. See Rules 2.101 to 2.105.

A separate fee of twenty-five dollars for each class opposed must accompany the opposition.

[NOTE: For publication of marks presented in applications for registration in one class, see section 2.]

SN 248,812. Kaiser Foundation Hospitals, Oakland, Calif. Filed June 23, 1966.

KAISER

Class 100—Miscellaneous

For Hospital Services (Int. Cl. 42).

Class 106—Material Treatment

For Prescription Pharmacy Services (Int. Cl. 42).

First use at least as early as Dec. 31, 1953.

SN 249,538. Instrument Flight Research Corporation, Inc., Wichita, Kans. Filed July 5, 1966.

IFR

Class 21—Electrical Apparatus, Machines, and Supplies

For Automatic Volume Controls for Aircraft Radios (Int. Cl. 9).

Class 26—Measuring and Scientific Appliances

For Slaved Directional Gyros, and Performance Measuring Equipment for Aircraft Navigation Radios (Int. Cl. 9).

First use July 7, 1965.

SN 263,742. CAH Industries Incorporated, Franklin Park, Ill. Filed Feb. 1, 1967.

C A H

Owner of Reg. No. 778,023.

Class 5—Adhesives

For Adhesive Cement Which Is Also Used as a Filler for Cracks in Leather, Plastic, Wood, Concrete, and the Like; and a Quick-Setting Cement for Rubber, Foam Rubber, Neoprene, and the Like (Int. Cl. 1).

First use Aug. 22, 1963.

Class 6—Chemicals and Chemical Compositions

For Liquid Leather Dressing and Preservative; a Solvent for Use With liquid Coating To Restore, Renew, Protect, and Color Leather, Leatherette, Canvas, Concrete, and Plastic Surfaces; a Liquid Coating for Fabrics, Rugs, Draperies, Tents, Boat Sails, and Clothing To Preserve Their Life and To Render Them Water Repellant and Mothproof and a Solvent To Prepare Surfaces for Coating With Same; and a Talcum for Application to Neoprene Foam Rubber and Other Rubber Products for the Preservation Thereof in Storage (Int. Cl. 1).

First use Aug. 21, 1963.

Class 16—Protective and Decorative Coatings

For Liquid Coating To Restore, Renew, and Protect Leather, Leatherette, Canvas, Concrete and Plastic Surfaces; a Liquid Protective Coating To Prolong the Life and Use of Natural and Synthetic Rubber; and a Liquid Coating for New and Old Galvanized and Other Metal Surfaces (Int. Cl. 2).

First use Aug. 15, 1963.

Class 52—Detergents and Soaps

For Liquid Cleaner for Use on Plastic and Plastic Coated Fabrics; and an emulsion To Clean, Lubricate, and Preserve Neoprene Foam Rubber (Int. Cl. 3).

First use Sept. 23, 1963.

SN 265,459. John Newton Woodworth, Kelowna, British Columbia, Canada. Filed Feb. 27, 1967.

PORTA CABANA

Applicant disclaims any exclusive use of the word "Cabana" apart from the trademark shown in the accompanying drawing. Owner of Canadian Reg. No. 134,164, dated Jan. 10, 1964.

Class 12—Construction Materials

For Transportable Prefabricated Cottages (Int. Cl. 19).

Class 38—Prints and Publications

For Drawings and Plans for the Construction of Prefabricated Cottages (Int. Cl. 16).

Subj. to Intf. with SN 283,529.

SN 266,615. Slazengers Limited, d.b.a. Challenge House, Croydon, Surrey, England. Filed Mar. 14, 1967.

SLAZENGER

Owner of Reg. No. 202,555.

Class 22—Games, Toys, and Sporting Goods

For Tennis, Squash, Soccer, Golf, Field Hockey, Rugby, and Cricket (Balls); Tennis, Badminton, and Squash (Frames and Rackets); Tennis, Table Tennis, Squash, Golf, and Badminton (Head Covers); Tennis and Badminton (Presses); Tennis and Squash (String); Table Tennis Bats, Table Tennis Sets, Field Hockey Sticks, and Cricket Bats; Badminton Shuttlecocks; Golf Clubs, Golf Bags, Golf Carts; Snow Skis and Scrum Caps; Soccer Shoes, Ski Boots, Field Hockey and Soccer Shinguards (Int. Cls. 25 and 28).

Class 39—Clothing

For Men's and Ladies' Tennis Shirts, Tennis Shorts, Tennis Cardigans; Tennis Hose, Tennis Shoes, and Tennis Sweaters; Ladies' Tennis Skirts and Tennis Dresses; Men's and Ladies' Golf Shirts, Golf Hose, Golf Pullovers, Golf Gloves; and Sweatlets (Wristlets) (Int. Cls. 25 and 28).

First use Mar. 1, 1964; in commerce Mar. 1, 1964.

SN 269,766. Maxon Premix Burner Company, Inc., Muncie, Ind. Filed Apr. 21, 1967.

MAXON

Class 100—Miscellaneous

For Engineering and Design of Industrial Heating Apparatus and Systems (Int. Cl. 42).

Class 103—Construction and Repair

For Servicing of Industrial Heating Apparatus and Systems (Int. Cl. 37).

First use in or about 1916.

SN 270,838. Washington State University, Pullman, Wash. Filed May 8, 1967.

Class 46—Foods and Ingredients of Foods

For Cheese (Int. Cl. 29).
First use Oct. 1, 1959.

Class 107—Education and Entertainment

For Educational and Athletic Services at the University Level (Int. Cl. 41).
First use Sept. 1, 1959; 1938 in a different form.

SN 273,825. Northern Electric Company, Chicago, Ill. Filed June 14, 1967.

Northern Electric

The word "Electric" is disclaimed apart from the mark as a whole. Owner of Reg. No. 712,797.

Class 21—Electrical Apparatus, Machines, and Supplies

For Electric Cord Sets (Int. Cl. 9).
First use at least as early as 1922.

Class 29—Brooms, Brushes, and Dusters

For Electric Toothbrushes (Int. Cl. 21).
First use October 1965.

Class 34—Heating, Lighting, and Ventilating Apparatus

For Humidifiers (Int. Cl. 11).
First use April 1966.

Class 44—Dental, Medical, and Surgical Appliances

For Electric Vaporizers, Massagers, Curling Irons, and Heating Pads (Int. Cls. 9 and 10).
First use 1919.

SN 297,235. W. Ø. Larsen & Lichtingers Fabriker A/S, Copenhagen, Denmark. Filed May 3, 1968.

LARGO

Class 8—Smokers' Articles, Not Including Tobacco Products

For Pipes (Int. Cl. 34).
First use Aug. 19, 1960; in commerce Aug. 19, 1960.

Class 17—Tobacco Products

For Cigarillos (Int. Cl. 34).
First use Jan. 1, 1946; in commerce Sept. 9, 1955.

SECTION 2

The following marks are published in compliance with section 12(a) of the Trademark Act of 1946. Opposition under section 13 may be filed within thirty days of publication. See Rules 2.101 to 2.105.
A fee of twenty-five dollars must accompany the opposition.
[NOTE: For publication of marks presented in a combined application for registration in more than one class, see section 1.]

Class 1 — Raw or Partly Prepared Materials

SN 273,800. Samuel W. Smith, d.b.a. Smith Carter Company, Sandpoint, Idaho. Filed June 13, 1967.

MAY KING

For Potting Soil (Int. Cl. 1).
First use Mar. 6, 1967.

SN 278,454. United Merchants and Manufacturers, Inc., New York, N.Y. Filed Aug. 17, 1967.

GLASCOAT

For Polyester Resins (Int. Cl. 1).
First use on or about Aug. 8, 1954.

SN 283,784. Dynamit Nobel Aktiengesellschaft, Troisdorf, Germany. Filed Oct. 31, 1967.

MIPOPLAST

Owner of German Reg. No. 750,606, dated Dec. 30, 1959; and U.S. Reg. No. 674,775.
For Synthetic Resinous Materials in the Form of Films, Plates, Profiles, Strips, Bands, and Tubes (Int. Cl. 17).

SN 284,318. Ranger Industrial Oil Corporation, Winnie, Tex. Filed Nov. 7, 1967.

KOTEOIL

For Additive for Drilling Muds Used in the Drilling of Wells and Comprising Essentially Oil Suspended Asphalt (Int. Cl. 1).
First use about Feb. 22, 1963.

SN 284,731. Rexall Drug and Chemical Company, d.b.a. Fiberfil, Los Angeles, Calif. Filed Nov. 13, 1967.

XYLAFIL

For Thermoplastic Resins (Int. Cl. 1).
First use Oct. 16, 1967.

SN 284,732. Rexall Drug and Chemical Company, d.b.a. Fiberfil, Los Angeles Calif. Filed Nov. 13, 1967.

NOLYN

For Thermoplastic Resins (Int. Cl. 1).
First use Oct. 13, 1967.

SN 284,822. International Pulp Sales Company, New York, N.Y. Filed Nov. 14, 1967.

ACETAKRAFT

For Wood Pulp (Int. Cl. 1).
First use Oct. 30, 1967.

SN 285,264. Spring Valley Ranch, Volga, Iowa. Filed Nov. 20, 1967.

Pc

For Cattle (Int. Cl. 31).
First use Aug. 15, 1967.

SN 293,773. Buning the Florist, Inc., Fort Lauderdale, Fla. Filed Jan. 29, 1968.

Buning
THE FLORIST INC.

Applicant disclaims the words "The Florist Inc." apart from the mark as a whole.
For Cut Flowers, Potted Plants, Bushes, and Trees (Int. Cl. 31).
First use December 1925.

SN 295,566. Sternco Industries, Inc., Harrison, N.J. Filed Apr. 12, 1968.

GLO-GEMS

For Colored Particles for Use in Aquariums, Fish Bowls, and Planters (Int. Cl. 20).
First use Jan. 14, 1963.

Class 2 — Receptacles

SN 272,808. Stanley Cokas, d.b.a. Staco Industries, Swampscott, Mass. Filed June 1, 1967.

FLIP 'N SHAKE

For Salt and Pepper Shakers (Int. Cl. 21).
First use Feb. 21, 1967.

SN 273,036. Ciba Corporation, d.b.a. Accu-Pak Laboratories, New York, N.Y. Filed June 5, 1967.

ACCU-PAK

For Individual Packaging for Dispensing Medication (Int. Cl. 20).
First use May 19, 1967.

SN 284,747. Sinclair-Koppers Company, d.b.a. National Plastics Company, Kansas City, Mo. Filed Nov. 13, 1967.

FASH'N FLAIR

For Disposable Plastic Tumblers (Int. Cl. 21).
First use June 15, 1967.

SN 294,942. Kigu Limited, London, England. Filed Apr. 4, 1968.

WHEEL OF BEAUTY

For Cosmetic Powder Compacts and Cosmetic Powder Boxes (Int. Cl. 21).
First use Dec. 11, 1967; in commerce Feb. 1, 1968.

Class 3 — Baggage, Animal Equipments, Portfolios, and Pocketbooks

SN 288,489. Associated Dry Goods Corporation, d.b.a. The Denver Dry Goods Company, New York, N.Y. Filed Jan. 10, 1968.

POWDER RIVER

For Saddles (Int. Cl. 18).
First use during 1946.

SN 289,722. Sirco Products Co., Inc., Mount Vernon, N.Y. Filed Jan. 26, 1968.

COLLECTOR

For Clutch Wallets (Int. Cl. 18).
First use Jan. 15, 1968.

SN 289,723. Sirco Products Co., Inc., Mount Vernon, N.Y. Filed Jan. 26, 1968.

ZIP-A-RAMA

For Handbags (Int. Cl. 18).
First use Jan. 22, 1968.

Class 4 — Abrasives and Polishing Materials

SN 282,635. Stanley Home Products, Inc., Westfield, Mass. Filed Oct. 16, 1967.

QUICK LUSTRE

For Auto Polish (Int. Cl. 3).
First use January 1946.

SN 287,238. Turtle Wax, Inc., Chicago, Ill. Filed Dec. 19, 1967.

SUPER HARD SHELL

Owner of Reg. Nos. 659,499 and 768,063.
For Automobile Waxing and Polishing Composition (Int. Cl. 3).
First use Nov. 7, 1967.

Class 5 — Adhesives

SN 268,945. Conap, Inc., Allegany, N.Y. Filed Apr. 12, 1967.

EASYPOXY

For Epoxy Paste Adhesive Consisting of a Base and Hardener for Aluminum, Ferrous Metals, Wood, Glass, Ceramics, Cork, and Hard Plastics (Int. Cl. 1).
First use on or about June 13, 1963.

SN 286,508. Consumers Glue Co., Inc., St. Louis, Mo. Filed Dec. 8, 1967.

GLUINE

For Glue Wall Size (Int. Cl. 1).
First use about Feb. 1, 1927.

Class 6 — Chemicals and Chemical Compositions

SN 269,646. The Dow Chemical Company, Midland, Mich. Filed Apr. 20, 1967.

SCUFA

For Liquid Chemical Compositions Based on Polymers of Glycols and/or Isocyanates (Int. Cl. 1).
First use Aug. 13, 1965.

SN 269,872. Ethyl Corporation, Richmond, Va. Filed Apr. 24, 1967.

ETHYL

Owner of Reg. Nos. 187,410, 399,427, and others.
For Industrial and Development Chemicals—Namely, Aluminum Alkyls, Alum, Caustic Soda, Chlorinated Hydrocarbons, Hydropolymer Oil, Chlorinated Solvents, Linear Primary Alcohols, Ortho-alkylated Antioxidants, Ortho-Alkylated Chemicals, Sodium Metallic, Alkyl Nitrate, and Organo-Metallics (Int. Cl. 1).
First use April 1923.

SN 274,390. Ajinomoto Kabushiki Kaisha, d.b.a. Ajinomoto Co., Inc., Chuo-ku, Tokyo, Japan. Filed June 21, 1967.

AJICURE

For Curing Agents for Epoxy Resin (Int. Cl. 1).
First use Nov. 19, 1966; in commerce Nov. 19, 1966.

SN 275,117. Chemical Insecticide Corporation, Metuchen, N.J. Filed June 30, 1967.

CHEM FISH COLLECTOR

Applicant disclaims the words "Fish Collector" apart from the mark as shown.
For Stupefier Used by Scientific Institutions for the Collection of Aquatic Specimens (Int. Cl. 5).
First use Nov. 15, 1963.

SN 275,118. Chemical Insecticide Corporation, Metuchen, N.J. Filed June 30, 1967.

CHEM RICE

Applicant disclaims the word "Rice" apart from the mark as shown.
For Herbicide Used To Control Weeds in Rice Fields (Int. Cl. 5).
First use September 1966.

SN 277,798. J. A. Sexauer Mfg. Co., Inc., White Plains, N.Y. Filed Aug. 8, 1967.

SEXAUER

Owner of Reg. No. 558,236 and others.
For Chemical Preparations—Namely, Boiler Compound, Scale, Rust, and Corrosion Inhibitors (Int. Cl. 1).
First use during 1921.

SN 279,855. Petrolite Corporation, St. Louis, Mo. Filed Sept. 7, 1967.

CERAMER

For Wax or Wax-Polymer Composition Used in the Manufacture of Polishes (Int. Cl. 4).
First use July 14, 1967.

SN 280,443. Madison Chemical Corporation, Maywood, Ill. Filed Sept. 15, 1967.

DIRECT

For Disinfectant-Deodorant for Hospital and Institutional Use (Int. Cl. 5).
First use Jan. 23, 1967.

SN 283,847. Andresen Corporation, Chicago, Ill. Filed Nov. 1, 1967.

TIZE

For Chemical Composition Used as an Additive to Bituminous Paving Mixtures To Improve Adhesiveness, Water Resistance, and Stability of Such Mixtures (Int. Cl. 1).
First use Jan. 31, 1967.

Class 7 — Cordage

SN 278,011. Lion Ribbon Company, Inc., New York, N.Y. Filed Aug. 10, 1967.

STEM-TEX

For Tapes—Namely, Tapes Used for Floral Displays (Int. Cl. 17).
First use in or before November 1963.

SN 288,680. Continental Copper & Steel Industries, Inc., New York, N.Y. Filed Jan. 12, 1968.

LASHOOK

For Straps To Maintain Tarpaulin in Place (Int. Cl. 22).
First use July 19, 1967.

Class 9 — Explosives, Firearms, Equipments, and Projectiles

SN 290,471. Clipper Pyrotechnic Corp., Lynwood, Calif. Filed Feb. 7, 1968.

KING KONG

For Fireworks (Int. Cl. 13).
First use on or about Jan. 15, 1964.

Class 10 — Fertilizers

SN 296,393. Badische Anilin- & Soda-Fabrik Aktiengesellschaft, Ludwigshafen (Rhine), Germany. Filed Apr. 24, 1968.

NITROPHOSKA

Owner of U.S. Reg. No. 376,384.
For Fertilizers (Int. Cl. 1).
First use October 1926; in commerce October 1926.

Class 12 — Construction Materials

SN 188,681-A. Trylon Incorporated, Elverson, Pa. Filed Mar. 13, 1964.

TRYLON

Owner of Reg. Nos. 571,563, 571,564, and 821,060.
For Tower and Masts and Sections Thereof Useful in Supporting Radio Antenna, as Well as Complete Antenna Systems (Int. Cl. 19).
First use 1953.

SN 266,714. Aluminum Company of America, Pittsburgh, Pa. Filed Mar. 15, 1967.

TEMPER RIB

Applicant disclaims the word "Rib" apart from the mark.
For Roofing and Siding Panels (Int. Cl. 19).
First use Mar. 3, 1967.

SN 267,269. Sears, Roebuck and Co., Chicago, Ill. Filed Mar. 21, 1967.

INDEPENDENCE "BRICK"

The word "Brick" is disclaimed apart from the mark as shown, with no waiver of applicant's common law rights.
For Simulated Brick Wall Covering—Namely, Textured Plastic Plate Resembling Brick Face, Including Mortar Line on Sides, for Building Interiors (Int. Cl. 19).
First use on or about Sept. 3, 1965.
Subj. to Intf. with SN 263,930.

SN 268,195. Kaiser Aluminum & Chemical Corporation, Oakland, Calif. Filed Apr. 3, 1967.

COELEX

For Refractory Brick (Int. Cl. 19).
First use at least as early as Feb. 1, 1966.

SN 268,246. Vetreria di Vernante S.p.A., Cuneo-Spinetta, Italy. Filed Apr. 3, 1967.

VERAPHON

Priority claimed under Sec. 44(d) on Italian application filed Oct. 24, 1966; Reg. No. 200,558, dated Mar. 10, 1967.
For Insulating Glass (Int. Cl. 17).

SN 273,600. Cascade Industries, Inc., Edison, N.J. Filed June 12, 1967.

ALUMAPOOL

For Prefabricated Swimming Pools for Assembly, in Situ, Usually as a Permanent Installation (Int. Cl. 19).
First use Apr. 28, 1967.

SN 274,053. Economy Forms Corporation, Des Moines, Iowa. Filed June 16, 1967.

EFCO

The drawing is lined for orange, but the color does not form a part of the mark. Owner of Reg. No. 606,591.
For Metal Forms for Use in Retaining Concrete Structures During the Setting and Hardening Thereof (Int. Cl. 6).
First use June 1, 1962.

SN 278,153. Niedermeyer-Martin Company, Portland, Oreg. Filed Aug. 14, 1967.

TIMBERSEAL

For Lumber That Has Been Treated With a Preservative Preparation (Int. Cl. 19).
First use Jan. 1, 1966.

SN 280,531. Akemi Incorporated, Charlotte, Mich. Filed Sept. 18, 1967.

akemi

For Repair and Crack Filler Composition for Metallic and Non-Metallic Articles (Int. Cl. 17).
First use March 1963.

SN 283,660. Hendon Construction Company, Little Ferry, N.J. Filed Oct. 30, 1967.

POOL BY WIRE

Applicant disclaims the word "Pool" apart from the mark as shown.
For Prefabricated Swimming Pools (Int. Cl. 19).
First use Aug. 31, 1967.

SN 283,785. Dynamit Nobel Aktiengesellschaft, Troisdorf, Germany. Filed Oct. 31, 1967.

MIPODUR

Owner of German Reg. No. 792,545, dated Dec. 30, 1969; and U.S. Reg. No. 674,775.
For Profiles—Namely, Window Sectional Members Made of Synthetic Resinous Material (Int. Cl. 19).

SN 285,478. Grant Wilson, Incorporated, Chicago, Ill. Filed Nov. 22, 1967.

SADDLET

For Thermal Insulated Pipe Hanger Supports (Int. Cl. 17).
First use Aug. 25, 1967.

SN 286,263. The General Tire & Rubber Company, Akron, Ohio. Filed Dec. 5, 1967.

DURAPORT

For Elastomeric Waling Strips (Int. Cl. 17).
First use Dec. 29, 1966.

SN 287,155. Dura Last Shingle Corp., Fall River, Mass. Filed Dec. 18, 1967.

DURA LAST

For Architectural Sidings in the Nature of Imitation Wooden Shingles and Clapboards (Int. Cl. 19).
First use on or about Jan. 4, 1967.

SN 290,856. Honeycomb Products, Inc., Miami, Fla. Filed Feb. 12, 1968.

For Resin Impregnated Fiber Glass Honeycomb Cellular Material Sold in Bulk (Int. Cl. 21).
First use on or about Feb. 28, 1967.

SN 292,163. Acme Highway Products Corporation, Buffalo, N.Y. Filed Feb. 29, 1968.

ACMA

For Parts for Use in Highway Construction—Namely, Joint Supports, Bridge Pads, and Joint Seals (Int. Cl. 19).
First use Nov. 21, 1967.

SN 292,346. Cascade Industries, Inc., Edison, N.J. Filed Mar. 4, 1968.

AQUADOME

For Collapsible Swimming Pool Enclosures (Int. Cl. 28).
First use Oct. 4, 1967.

SN 292,347. The Cleveland Fabricating Company, Cleveland, Ohio. Filed Mar. 4, 1968.

CLE-FAB

Owner of Reg. No. 816,843.
For Building Thermal Insulation Facing Materials and Building Insulation Sealing Strips (Int. Cl. 17).
First use at least as early as 1965.

SN 293,090. Minnesota Mining and Manufacturing Company, St. Paul, Minn. Filed Mar. 13, 1968.

The drawing is lined for the color blue.
For Synthetic Rubber Based Sealant for Metal and Other Surfaces (Int. Cl. 17).
First use Mar. 1, 1967.

SN 293,893. Aluminex Incorporated, Los Angeles, Calif. Filed Mar. 22, 1968.

ALUMINEX

Owner of Reg. No. 558,180.
For Aluminum Glazing Bars Used for Roof and Sidewall Glazing, Skylights, Greenhouses, Lath Houses, and Ventilation Louvers (Int. Cls. 6 and 19).
First use at least as early as 1939.

SN 294,319. The Schlegel Manufacturing Company, Rochester, N.Y. Filed Mar. 27, 1968.

FIN-SEAL

For Weather Stripping and Weather Seals of the Pile Type (Int. Cl. 19).
First use at least as early as December 1962.

SN 294,949. Limbacher Paint & Color Works, Inc., Mount Vernon, N.Y. Filed Apr. 4, 1968.

A-OK

For Lacquer Glazing Putty for Automotive Refinishing (Int. Cl. 2).
First use June 11, 1962.

SN 295,456. Overall Paint, Inc., Bedford Heights, Ohio. Filed Apr. 11, 1968.

STOPPER

Owner of Reg. No. 638,289.
For Driveway Crack and Joint Filler (Int. Cl. 17).
First use July 1, 1960.

SN 296,868. Potlatch Forests, Inc., San Francisco, Calif. Filed Apr. 29, 1968.

SOLDIER BEAMS

Applicant disclaims the word "Beams" apart from the mark as shown without prejudice to any common law right thereto.
For Laminated Wooden Beams (Int. Cl. 19).
First use Jan. 26, 1968.

SN 297,135. Philip Carey Corporation, Cincinnati, Ohio. Filed May 2, 1968.

MINUTEMAN

For Asbestos Cement Siding Shingles and Clapboards (Int. Cl. 19).
First use Nov. 8, 1967.

Class 13—Hardware and Plumbing and Steam-Fitting Supplies

SN 268,406. Great Lakes Screw Corporation, Chicago, Ill. Filed Apr. 5, 1967.

TRI-POINT

For Thread Forming Fasteners (Int. Cl. 6).
First use Mar. 1, 1967.

SN 276,135. Hedwin Corporation, New York, N.Y. Filed July 17, 1967.

DGK

For Screw-Type Plastic Closures and Dispensing Faucets for Plastic Containers for Liquids and Powders (Int. Cl. 20).
First use June 14, 1967.

SN 277,840. Kenics Corporation, Danvers, Mass. Filed Aug. 8, 1967.

STATIC MIXER

Applicant disclaims the word "Mixer" apart from the mark as shown.
For Nozzles for Agitating, Homogenizing, or Mixing Fluid Materials (Int. Cl. 11).
First use July 6, 1967.

SN 282,770. Bradley Washfountain Company, Menomonee Falls, Wis. Filed Oct. 18, 1967.

BRADPACK

For Lavatories (Int. Cl. 11).
First use Aug. 30, 1967.

SN 283,478. Waterous Company, St. Paul, Minn. Filed Oct. 26, 1967.

PACER

For Fire Hydrants (Int. Cl. 11).
First use Oct. 6, 1967.

SN 283,516. Ford Motor Company, Dearborn, Mich. Filed Oct. 27, 1967.

U.B.S.

For Fasteners—Namely, Nuts, Bolts, and Screws (Int. Cl. 6).
First use Jan. 25, 1967.

SN 283,658. Hartwell Corporation, Los Angeles, Calif. Filed Oct. 30, 1967.

MICRO

For Quick Release Hinges (Int. Cl. 6).
First use January 1954.

SN 283,699. Omark Industries, Inc., Portland, Oreg. Filed Oct. 30, 1967.

MICRO-MANUFACTURE

Owner of Reg. No. 715,722.
For Drivepins (Int. Cl. 6).
First use July 2, 1962.

SN 284,049. Sivaco Wire & Nail Company, Marieville, Quebec, Canada. Filed Nov. 2, 1967.

HI-AD

Owner of Canadian Reg. No. 132,241, dated Aug. 9, 1963.
For Wire Mesh Fabric (Int. Cl. 6).
First use at least July 1963; in commerce at least July 1963.

SN 284,054. Southern Tire & Patch Company, Inc., Mobile, Ala. Filed Nov. 2, 1967.

NYLO-FLEX

Owner of Reg. No. 715,076.
For Valves and Valve Hardware (Int. Cl. 6).
First use Mar. 1, 1963.

SN 284,445. Cajon Company, Solon, Ohio. Filed Nov. 9, 1967.

VCR

For Tube Fittings (Int. Cl. 6).
First use Oct. 27, 1967.

SN 284,446. Cajon Company, Solon, Ohio. Filed Nov. 9, 1967.

VCO

For Tube Fittings (Int. Cl. 6).
First use Oct. 31, 1967.

SN 284,662. Hoke Incorporated, Cresskill, N.J. Filed Nov. 13, 1967.

ROTO-FOLD

Owner of Reg. No. 754,445.
For Valves and Manifold Systems Comprising Valves (Int. Cl. 6).
First use during August 1967.

SN 284,828. Nippon Bulge Industries, Ltd., Minato-ku, Tokyo, Japan. Filed Nov. 14, 1967.

NBI

Owner of U.S. Reg. No. 823,273.
For Pipe Fittings (Int. Cl. 6).
First use July 1967; in commerce July 1967.

SN 294,885. Dynamic Classics, Ltd., New York, N.Y. Filed Apr. 4, 1968.

WATER WHIP

For Lawn Sprinkler (Int. Cl. 11).
First use Jan. 5, 1968.

Class 14 — Metals and Metal Castings and Forgings

SN 275,500. Alcan Aluminum Corporation, Cleveland, Ohio. Filed July 7, 1967.

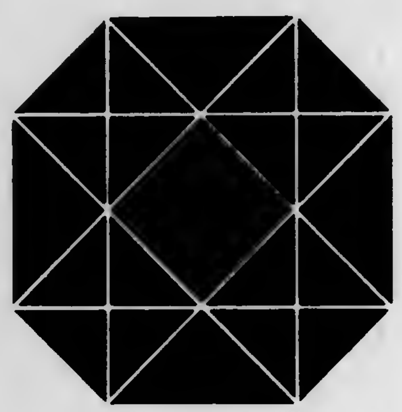

For Painted Aluminum Sheet Material (Int. Cl. 6).
First use June 14, 1967.

SN 276,370. United Aircraft Corporation, East Hartford, Conn. Filed July 19, 1967.

BORSIC

For Inorganic Composite Fiber Consisting of a Tungsten Substrate, and Including Silicon-Carbide and Boron (Int. Cl. 6).
First use about June 12, 1967.

SN 291,732. R. J. Gallagher Company, Houston, Tex. Filed Feb. 23, 1968.

For Stainless Steel and Aluminum Rods (Int. Cl. 6).
First use on or before January 1956.

Class 15 — Oils and Greases

SN 275,001. R. T. Vanderbilt Company, Inc., New York, N.Y. Filed June 28, 1967.

CUVAN

Owner of Reg. No. 776,428.
For Multi-Purpose Gasoline and Fuel Oil Additive (Int. Cl. 1).
First use May 16, 1967.

SN 285,746. R. H. Miller Company, Homer, N.Y. Filed Nov. 28, 1967.

REDSKIN

Owner of Reg. No. 187,384.
For Lubricants for Metal Drawing (Int. Cl. 4).
First use August 1951.

Class 16 — Protective and Decorative Coatings

SN 276,546. DeMert & Dougherty, Inc., d.b.a. Dedura Paints, Chicago, Ill. Filed July 21, 1967.

DEDURA

For Enamel (Int. Cl. 2).
First use on or about June 12, 1967.

SN 285,099. U.S. Plywood-Champion Papers Inc., New York, N.Y. Filed Nov. 17, 1967.

FLEXSOL

Owner of Reg. Nos. 286,555, 826,691, and others.
For Wood Finishes and Solvent Thinners Therefor and Also Used To Clean Brushes and Tools, To Thin Alkyd Enamels and Varnishes and To Clean Surfaces Prior to Refinishing (Int. Cl. 2).
First use on or about Oct. 31, 1967.

Class 17 — Tobacco Products

SN 279,744. Theodorus Niemeijer N.V., d.b.a. Theodorus Niemeyer N.V., Groningen, Netherlands. Filed Sept. 6, 1967.

FLYING DUTCHMAN

Owner of U.S. Reg. No. 690,099.
For Cut Tobacco, Pipe Tobacco, and Cigarettes (Int. Cl. 34).
First use Oct. 25, 1950; in commerce Oct. 25, 1950.

SN 293,022. Consolidated Cigar Corporation, New York, N.Y. Filed Mar. 12, 1968.

LA MANCHA

For Cigars (Int. Cl. 34).
First use Feb. 20, 1968.

SN 294,511. Lane Limited, New York, N.Y. Filed Mar. 29, 1968.

CHOCO BLEND NO. 88

The word "Blend" is disclaimed apart from the mark as shown.
For Smoking Tobacco (Int. Cl. 34).
First use Mar. 20, 1968.

SN 297,975. Conwood Corporation, Memphis, Tenn. Filed May 13, 1968.

BIG WHEEL

For Snuff (Int. Cl. 34).
First use Feb. 26, 1968.

Class 18 — Medicines and Pharmaceutical Preparations

SN 269,691. Sandoz, Inc., Hanover, N.J. Filed Apr. 20, 1967.

HISTAY

For Antihistamine (Int. Cl. 5).
First use Apr. 17, 1967.

SN 270,610. Richardson-Merrell Inc., New York, N.Y. Filed May 3, 1967.

HONEY BLOOM

The word "Honey" is disclaimed apart from the mark as a whole.
For Vitamin/Iron Compound for Veterinary Use (Int. Cl. 5).
First use Feb. 17, 1966.

SN 270,691. McNeil Laboratories, Incorporated, Fort Washington, Pa. Filed May 4, 1967.

AUTO-JECT

For Automatic Injection Units Containing Pharmaceutical Preparations (Int. Cl. 5).
First use Mar. 10, 1967.

SN 272,646. USV Pharmaceutical Corporation, New York, N.Y. Filed May 29, 1967.

CŪTADAN

For Antiseborrheic Scalp Cream (Int. Cl. 5).
First use Apr. 12, 1967.

SN 272,648. USV Pharmaceutical Corporation, New York, N.Y. Filed May 29, 1967.

CŪTASEB

For Preparation for the Treatment of Seborrheic Skin Conditions (Int. Cl. 5).
First use Apr. 12, 1967.

SN 273,087. Mallinckrodt Chemical Works, St. Louis, Mo. Filed June 5, 1967.

LINKING CHEMISTRY TO MEDICINE

Owner of Reg. No. 768,528.
For Pharmaceutical and Medicinal Preparations (Int. Cl. 5).
First use May 7, 1962.

SN 276,834. Guardian Chemical Corporation, Long Island City, N.Y. Filed July 26, 1967.

BRONILIDENE

For Antimicrobial Medines (Int. Cl. 5).
First use Nov. 4, 1966.

SN 277,987. Evsco Pharmaceutical Co., Oceanside, N.Y. Filed Aug. 10, 1967.

RAGGEN

For Alergenic Extract for Veterinary Use (Int. Cl. 5).
First use Apr. 17, 1967.

SN 277,988. Evsco Pharmaceutical Co., Oceanside, N.Y. Filed Aug. 10, 1967.

GRASSGEN

For Alergenic Extract for Veterinary Use (Int. Cl. 5).
First use Apr. 17, 1967.

SN 277,989. Evsco Pharmaceutical Co., Oceanside, N.Y. Filed Aug. 10, 1967.

FLEAGEN

For Allergenic Extract for Veterinary Use (Int. Cl. 5).
First use Apr. 17, 1967.

SN 277,990. Evsco Pharmaceutical So., Oceanside, N.Y. Filed Aug. 10, 1967.

WEEDGEN

For Allergenic Extract for Veterinary Use (Int. Cl. 5).
First use Apr. 17, 1967.

SN 277,991. Evsco Pharmaceutical Co., Oceanside, N.Y. Filed Aug. 10, 1967.

INHALGEN

For Allergenic Extract for Veterinary Use (Int. Cl. 5).
First use Apr. 17, 1967.

SN 277,992. Evsco Pharmaceutical Co., Oceanside, N.Y. Filed Aug. 10, 1967.

DUMOGEN

For Allergenic Extract for Veterinary Use (Int. Cl. 5).
First use Apr. 17, 1967.

SN 277,993. Evsco Pharmaceutical Co., Oceanside, N.Y. Filed Aug. 10, 1967.

TREEGEN

For Allergenic Extract for Veterinary Use (Int. Cl. 5).
First use Apr. 17, 1967.

SN 278,688. Hartz Mountain Products Corp., New York, N.Y. Filed Aug. 21, 1967.

HARTZ MOUNTAIN

Owner of Reg. No. 767,025.
For First Aid Kit Containing Tablets and Powders for Sickness and Wounds of Dogs and Cats (Int. Cl. 5).
First use July 10, 1967.

SN 279,412. Rexall Drug and Chemical Company, d.b.a. Riker Laboratories, Los Angeles, Calif. Filed Aug. 30, 1967.

SOMBUCAPS

For Medicinal Preparation for Inducing Sleep (Int. Cl. 5).
First use Aug. 15, 1967.

SN 282,482. Smith, Miller & Patch, Inc., New York, N.Y. Filed Oct. 13, 1967.

CARDIOTENSIN

For Hypotensive Drug (Int. Cl. 5).
First use July 25, 1967.

SN 282,880. Bristol-Myers Company, New York, N.Y. Filed Oct. 19, 1967.

PURABIOTIC

For Antibiotic (Int. Cl. 5).
First use July 7, 1967.

SN 283,078. American Cyanamid Company, Wayne, N.J. Filed Oct. 23, 1967.

FOLBESYN

Owner of Reg. No. 434,062.
For Nutritional Preparations (Int. Cl. 5).
First use Dec. 6, 1946.

SN 283,079. American Cyanamid Company, Wayne, N.J. Filed Oct. 23, 1967.

LED-O-SAN

Owner of Reg. No. 435,077.
For Sulfur Preparations for the Treatment of Mange and Other Skin Diseases in Animals (Int. Cl. 5).
First use Mar. 18, 1947.

SN 283,080. American Cyanamid Company, Wayne, N.J. Filed Oct. 23, 1967.

PUROGENATED

Owner of Reg. No. 435,073.
For Alcohol Purified Antigen Preparations (Int. Cl. 5).
First use Feb. 24, 1947.

SN 283,272. Pro-Capa Products Inc., Brooklyn, N.Y. Filed Oct. 24, 1967.

SERET

For Scalp Treatment and Hair Revitalizer for Cleaning and Dissolving Crusts Due to Dandruff (Int. Cl. 5).
First use Sept. 10, 1954.

SN 283,320. Chattem Drug & Chemical Company, Chattanooga, Tenn. Filed Oct. 25, 1967.

DAA-O

For Dihydroxy Aluminum Aminoacetate (Int. Cl. 5).
First use Sept. 22, 1967.

SN 283,327. Eli Lilly and Company, Indianapolis, Ind. Filed Oct. 25, 1967.

LORIDINE

For Broad Spectrum Antibiotic (Int. Cl. 5).
First use Oct. 10, 1967.

SN 283,456. The Purdue Frederick Company, Yonkers, N.Y. Filed Oct. 26, 1967.

SENOXIN

For Laxative Preparation (Int. Cl. 5).
First use May 25, 1967.

SN 283,457. The Purdue Frederick Company, Yonkers, N.Y. Filed Oct. 26, 1967.

SENOXIME

For Laxative Preparation (Int. Cl. 5).
First use May 25, 1967.

SN 283,737. USV Pharmaceutical Corporation, New York, N.Y. Filed Oct. 30, 1967.

NARESPAN

For Orally Effective Nasal Decongestant (Int. Cl. 5).
First use Sept. 25, 1967.

SN 283,738. USV Pharmaceutical Corporation, New York, N.Y. Filed Oct. 30, 1967.

NITROMIST

For Aerosol Bronchodilator (Int. Cl. 5).
First use Sept. 21, 1967.

SN 283,863. Ciba Corporation, d.b.a. The Gland-O-Lac Company, Summit, N.J. Filed Nov. 1, 1967.

ECOLIN

For Veterinary Preparation for the Treatment of Infectious Diseases (Int. Cl. 5).
First use Sept. 26, 1967.

SN 283,964. Chas. Pfizer & Co., Inc., New York, N.Y. Filed Nov. 2, 1967.

EXIREL

For Psychotherapeutic Preparation (Int. Cl. 5).
First use Sept. 18, 1967.

SN 284,780. The Murine Company, Inc., Chicago, Ill. Filed Oct. 23, 1967.

CLEARINE

For Decongestant Eye Drops (Int. Cl. 5).
First use Sept. 20, 1967.

SN 297,740. Chas. Pfizer & Co., Inc., New York, N.Y. Filed May 9, 1968.

FORTIGRO

For Chemotherapeutic Agent for Nutritional and Therapeutic Use in Animals (Int. Cl. 5).
First use Apr. 17, 1968.

SN 298,175. Holland-Rantos Company, Inc., New York, N.Y. Filed May 15, 1968.

HR

Owner of Reg. Nos. 618,114, 757,204, and others.
For Medical Lubricating Jelly (Int. Cl. 5).
First use Feb. 1, 1964.

Class 19—Vehicles

SN 279,773. Precision Stabilizers, Inc., Porland, Oreg. Filed Aug. 1, 1967.

EQUA-SCOPE

For Vehicle Stabilizers That Prevent Lateral Sway and Tilting of a Vehicle Body and Components and Parts Thereof (Int. Cl. 12).
First use May 8, 1967.

SN 296,066. Biscayne Manufacturing Corporation, Miami, Fla. Filed Apr. 22, 1968.

SLIMGUARD

For Automobile Exterior Body Molding (Int. Cl. 12).
First use October 1967.

Class 20—Linoleum and Oiled Cloth

SN 283,000. The Goodyear Tire & Rubber Company, Akron, Ohio. Filed Oct. 20, 1967.

CAMINA

For Vinyl Flooring (Int. Cl. 27).
First use June 12, 1967.

SN 283,631. Congoleum-Nairn Inc., Kearny, N.J. Filed Oct. 30, 1967.

CARIBBEAN

For Plastic Coverings of the Smooth Surface, Resilient Type for Surfaces Such as Floors, Walls, Countertops, and the Like in the Form of Rolls, Rugs, and Tile (Int. Cl. 27).
First use Sept. 29, 1967.

SN 283,633. Congoleum-Nairn Inc., Kearny, N.J. Filed Oct. 30, 1967.

VENTURA

For Synthetic Resin Sheet Goods in the Form of Rolls, Rugs, and Tiles (Int. Cls. 19 and 27).
First use Sept. 29, 1967.

Class 21—Electrical Apparatus, Machines, and Supplies

SN 269,781. Orthopedic Equipment Company, Inc., Bourbon, Ind. Filed Apr. 21, 1967.

OSSOMAT

For Electric Motor Surgical Power Unit (Int. Cl. 9).
First use Apr. 22, 1966.

SN 270,092. United Aircraft Corporation, East Hartford, Conn. Filed Apr. 26, 1967.

MCP

For Modularly Packaged Electronic Components Particularly Monolithic Integrated Circuits, Transistors, Diodes, Resistors, Both Film and Discrete, Capacitors, Both Film and Discrete, and Inductors (Int. Cl. 9).
First use Mar. 17, 1967.

SN 270,650. Electronic Safety Controls, Inc., Des Moines, Iowa. Filed May 4, 1967.

ELECTRO-SHIELD

For Apparatus—Namely, an Isolation Transformer, a Power Source, and a Warning Device That Alerts the User to an Electrical Short (Int. Cl. 9).
First use on or about Apr. 3, 1967.

SN 272,741. Norton Associates, Inc., Copiague, N.Y. Filed May 31, 1967.

NORTON

For Magnetic Recording Heads, Pick-Ups, and Sensors for Use With Tape, Film Drum, Wire and Magnetic Ink; and Mountings Therefor (Int. Cl. 9).
First use June 15, 1957.

SN 272,758. Thomas Industries Inc., Louisville, Ky. Filed May 31, 1967.

CARAVEL

For Electric Fluorescent Lighting Fixtures for Installation on Ceilings (Int. Cl. 11).
First use at least as early as October 1961.

SN 281,897. Ircon, Inc., Chicago, Ill. Filed Oct. 5, 1967.

TEMPROX

For Heat Proximity Switches (Int. Cl. 9).
First use on or about Sept. 15, 1967.

SN 285,422. I-T-E Circuit Breaker Company, Philadelphia, Pa. Filed Nov. 22, 1967.

MOTOR-MINDER

For Manual Starters for Fractional Horsepower Electric Motors (Int. Cl. 9).
First use December 1966.

SN 286,733. Teltron, Inc., Boyertown, Pa. Filed Dec. 11, 1967.

FABICON

For Electronic Tubes (Int. Cl. 9).
First use Aug. 15, 1967.

SN 288,777. Carol Wire & Cable Corp., Pawtucket, R.I. Filed Jan. 15, 1968.

GTH

For Electrical Conducting Wire (Int. Cl. 9).
First use on or about Dec. 26, 1967.

SN 291,888. The National Cash Register Company, Dayton, Ohio. Filed Feb. 26, 1968.

N C R

Owner of Reg. Nos. 148,174, 842,856, and others.
For Electrical Lamps for Optical Equipment (Int. Cl. 9).
First use on or about Jan. 26, 1968.

SN 292,078. Circle F Industries, Inc., Trenton, N.J. Filed Feb. 28, 1968.

F

Owner of Reg. No. 841,556, and others.
For Electrical Switches; Pilot Lights; Pilot Light and Switch Blanks; Switch and Receptacle and Switch and Pilot Light Combinations; Wire Adaptors; Plug Bases; Cube Taps; Electrical Ooutlet and Outlet Boxes; Wall Plates and Cover Plates; Outlet Plug Caps; Heater and Load Plugs; Electrical Wire Cord Sets; Cord and Connector Sets; Lamp Holders; Electrical Sockets, Receptacles, and Parts Therefor; Electrical Sign Receptacles; Switch Mounting Plates; Caps for Fixture Sockets; Fuse Cutouts and Receptacles; Rosettes; Fluorescent Starter Sockets and Starter Socket and Lamp Holder Combinations; Wiring Harnesses; and Ceiling Receptacle Components (Int. Cls. 9 and 11).
First use Jan. 1, 1908.

SN 295,167. Premium Corporation of America, Inc., Minneapolis, Minn. Filed Apr. 8, 1968.

LADY MARIAN

For Electric Blankets (Int. Cl. 10).
First use Oct. 9, 1967.

SN 296,467. The Tappan Company, Mansfield, Ohio. Filed Apr. 24, 1968.

NAUTILUS

Owner of Reg. No. 684,450.
For Electric Toasters (Int. Cl. 11).
First use October 1966.

SN 296,820. Erie Technological Products, Inc., Erie, Pa. Filed Apr. 29, 1968.

MONOBLOC

Owner of Reg. No. 798,492.
For Capacitors (Int. Cl. 9).
First use 1964.

Class 22 — Games, Toys, and Sporting Goods

SN 242,010. Willard L. Henry, d.b.a. British Golf Ltd., San Jose, Calif. Filed Mar. 28, 1966.

British Golf Ltd.

For Golf Playing Equipment (Int. Cl. 28).
First use Oct. 27, 1965.

SN 253,803. United States Rubber Company, New York, N.Y. Filed Sept. 2, 1966.

ROYAL

Owner of Reg. Nos. 630,051, 658,573, and 795,291.
For Athletic Shoes, for Example, Golf Shoes, Track Shoes, Baseball Shoes, Wrestling Shoes, and Football Shoes (Int. Cl. 25).
First use 1950.

SN 268,224. The Pritchard Patent Product Company Limited, Devon, England. Filed Apr. 3, 1967.

PECO STREAMLINE

For Model Railway Track and Components Therefor, and Motors for Points, Rolling Stock, and Scenic Background for Use in Connection Therewith (Int. Cl. 28).
First use February 1960; in commerce in early 1962.

SN 270,998. Wright & McGill Co., Denver, Colo. Filed May 8, 1967.

BLOND

For Dispensing Containers for Leader Material or Fishing Line (Int. Cl. 28).
First use Aug. 7, 1966.

SN 272,505. Kohner Bros., Inc., East Paterson, N.J. Filed May 26, 1967.

HATS OFF

For Equipment Sold as a Unit for Playing a Parlor Type Game of Skill (Int. Cl. 28).
First use Mar. 8, 1967.

SN 274,988. Rexall Drug and Chemical Company, d.b.a. Tupperware, Los Angeles, Calif. Filed June 28, 1967.

TUPPERWARE TOYS

Applicant disclaims the word "Toys" apart from the mark as shown. The drawing is lined for the colors red and blue, but color is not claimed as a feature of the mark. Owner of Reg. No. 797,112.
For Toy Construction Sets (Int. Cl. 28).
First use Apr. 26, 1967.

SN 280,876. William R. Miller, d.b.a. William R. Miller Manufacturing Company, McLean, Va. Filed Sept. 21, 1967.

For Preparation for Application to a Golf Club To Keep It From Slipping in the Hand (Int. Cl. 28).
First use Dec. 20, 1966.

SN 282,397. Sandspa Corporation, Little Neck, N.Y. Filed Oct. 12, 1967.

L-B TRAINER

Applicant disclaims the representation of a golf ball. No claim of exclusive right is made for the word "Trainer" apart from the mark as shown.
For Training Devices To Indicate to the Wearer That His Arm Has Bent and Useful in Golf, Archery and/or Bowling (Int. Cl. 28).
First use Aug. 12, 1967.

SN 287,329. What-Cha-Ma-Call-It, Inc., New York, N.Y. Filed Dec. 20, 1967.

CHUTZPAH

For Amusement Board Game (Int. Cl. 28).
First use Oct. 25, 1967.

SN 288,336. Multiple Products, Inc., Bronx, N.Y. Filed Jan. 8, 1968.

MULTIPLE TOYMAKERS

The expression "Toymakers" is disclaimed apart from the mark as shown. Owner of Reg. Nos. 758,051 and 758,052.
For General Line of Play Toys and Kits (Int. Cl. 28).
First use May 1965.

SN 293,659. A & E Tool and Gage Co., Inc., Rockford, Ill. Filed Mar. 20, 1968.

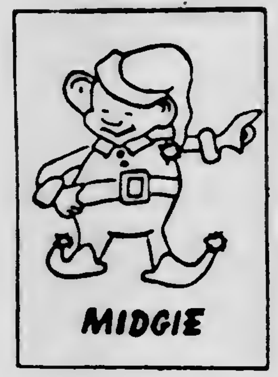

Owner of Reg. No. 612,999.
For Die-Cast Toy Vehicles (Int. Cl. 28).
First use Jan. 8, 1968; October 1956 as to elf design.

SN 293,660. A & E Tool and Gage Co., Inc., Rockford, Ill. Filed Mar. 20, 1968.

The drawing is lined for the color red, and color is claimed as a feature of the mark.
For Die-Cast Toy Vehicles (Int. Cl. 28).
First use October 1956.

SN 297,339. Ideal Toy Corporation, Hollis, N.Y. Filed May 6, 1968.

POPPIN HOPPIES

For Equipment Sold as a Unit for Playing a Parlor Game (Int. Cl. 28).
First use Mar. 1, 1968.

SN 297,919. Eldon Industries, Inc., Hawthorne, Calif. Filed May 13, 1968.

JET FIRE

For Toy Boats (Int. Cl. 28).
First use Dec. 9, 1967.

SN 297,920. Eldon Industries, Inc., Hawthorne, Calif. Filed May 13, 1968.

BILLY BLASTOFF

For Toy Doll (Int. Cl. 28).
First use Apr. 3, 1968.

Class 23—Cutlery, Machinery, and Tools, and Parts Thereof

SN 245,993. The Superior Electric Company, Bristol, Conn. Filed May 18, 1966.

Owner of Reg. Nos. 663,060 and 781,695.
For Drilling and Milling Machines Incorporating Digital Controls—Namely, Numerical Controls and Tape Controls, Worktables for Machine Tools, and Drives Therefor, and Adjustable Speed Drives for Electric Motors (Int. Cl. 7).
First use Oct. 22, 1965.

SN 257,462. Dana Corporation, Toledo, Ohio. Filed Oct. 28, 1966.

STERN-POWR

For Power Transmission Mechanisms—Namely, Marine Drive Units and Parts Thereof (Int. Cl. 7).
First use on or about Apr. 24, 1966.

SN 257,543. Water Systems Council, Chicago, Ill. Filed Oct. 28, 1966. COLLECTIVE MARK.

Applicant disclaims the exclusive right to use that part of the mark identified as "Certified Performance," but applicant waives none of its common law rights therein.
For Water Pumps and Parts of Water Pumps (Int. Cl. 7).
First use Feb. 15, 1966.

SN 267,194. Swiss Industrial Company, Neuhausen-Rhinefalls, Schaffhouse, Switzerland. Filed Mar. 20, 1967.

SIGVAC

Priority claimed under Sec. 44(d) on Swiss Reg. No. 221,373, dated Oct. 27, 1966. Owner of U.S. Reg. Nos. 612,016, 613,817, and 622,999.
For Packaging Machines (Int. Cl. 7).

SN 267,195. Swiss Industrial Company, Neuhausen-Rhinefalls, Schaffhouse, Switzerland. Filed Mar. 20, 1967.

SIGMAGIC

Priority claimed under Sec. 44(d) on Swiss Reg. No. 221,375, dated Nov. 10, 1966. Owner of U.S. Reg. Nos. 612,016, 613,817, and 622,999.
For Packaging Machines and Transport Equipment in the Nature of a Belt for Packaging Machines (Int. Cl. 7).

SN 267,196. Swiss Industrial Company, Neuhausen-Rhinefalls, Schaffhouse, Switzerland. Filed Mar. 20, 1967.

SIGOTHERM

Priority claimed under Sec. 44(d) on Swiss Reg. No. 220,634, dated Oct. 20, 1966. Owner of U.S. Reg. Nos. 612,016, 613,817, and 622,999.
For Packaging Machines for Forming, Filling, and Closing Cartons (Int. Cl. 7).

SN 268,711. Crane Co., New York, N.Y. Filed Apr. 10, 1967.

ELECTROCYLINDER

For Power Pack for Hydraulic Actuators—Namely, a Motor-Pump-Reservoir Unit With Limit Switches and Optional Blocking/Limiting Valve, and Component Parts Thereof (Int. Cl. 7).
First use Dec. 28, 1966.

SN 268,961. Huyck Corporation, Rensselaer, N.Y. Filed Apr. 12, 1967.

HUYLIFE

For Parts for Papermaking Machinery—Namely, Suction Box Covers, Hydrofoil Blades, Hydrofoil Blade Covers, Uhle Box Covers, and the Like (Int. Cl. 7).
First use July 27, 1966.

SN 275,098. Lee Wilson Engineering Company, Inc., Rocky River, Ohio. Filed June 29, 1967.

U.A.D.

For Complete Integrated Plants for Cold Rolling, Cleaning, Annealing, and Temper Rolling of Strip Steel in Coils (Int. Cl. 7).
First use Apr. 4, 1967.

SN 279,854. Permattach Diamond Tool Corp., Milford, N.H. Filed Sept. 7, 1967.

PERMATTACH

Owner of Reg. No. 613,049.
For Diamond Pointed Turning and Dressing Tools, Diamond Drill Bits, Diamond Saws, and Diamond Wheels (Int. Cl. 8).
First use during January 1959.

SN 281,990. S. S. Kresge Company, Detroit, Mich. Filed Oct. 6, 1967.

For High Speed Drills (Int. Cl. 7).
First use on or before June 9, 1967.

SN 282,137. Ritter Pfaudler Corporation, Rochester, N.Y. Filed Oct. 9, 1967.

SURFAERATOR

For Mechanical Surface Aerators Used in Waste and Water Treatment Systems (Int. Cl. 11).
First use Mar. 31, 1961.

SN 283,671. S. S. Kresge Company, Detroit, Mich. Filed Oct. 30, 1967.

For Circular Saw Blades and Combination Wrench Sets (Int. Cls. 7 and 8).
First use in or before August 1967.

SN 283,672. S. S. Kresge Company, Detroit, Mich. Filed Oct. 30, 1967.

Owner of Reg. Nos. 743,912, 833,740, and others.
For Circular Saw Blades and Combination Wrench Sets (Int. Cls. 7 and 8).
First use in or before August 1967.

SN 284,885. The Auto-Soler Company, Atlanta, Ga. Filed Nov. 15, 1967.

WHEEL-BENCH

For Machine for Attaching Shoe Heels Integrated With Work Bench Unit (Int. Cl. 7).
First use Oct. 10, 1967.

SN 286,753. Bata Shoe Company of Canada, Limited, Batawa, Ontario, Canada. Filed Dec. 12, 1967.

SIMPAK

Owner of Canadian Reg. No. 146,794, dated Aug. 26, 1966.
For Direct Injection Moulding Apparatus (for Footwear) (Int. Cl. 7).

SN 287,444. Millers Falls Company, Greenfield, Mass. Filed Dec. 22, 1967.

QUIK-HOLD

For Screwdrivers (Int. Cl. 8).
First use 1960.

SN 287,717. Ivan F. and Julia M. Belknap (joint owners), d.b.a. Van F. Belknap Company, Detroit, Mich. Filed Dec. 28, 1967.

CAGE-LOK

For Specialty Screwdrivers (Int. Cl. 8).
First use in about October 1962.

SN 291,801. Winchester Marine Corporation, Miami, Fla. Filed Feb. 23, 1968.

NAUTALITE

For Plastic Centrifugal Pumps (Int. Cl. 7).
First use Dec. 1, 1967.

SN 296,469. The Tappan Company, Mansfield, Ohio. Filed Apr. 24, 1968.

NAUTILUS

Owner of Reg. No. 684,450.
For Vacuum Cleaning Systems and Components (Int. Cl. 7).
First use March 1965.

Class 24—Laundry Appliances and Machines

SN 276,585. Rockland Bleach and Dye Works, Inc., Brooklandville, Md. Filed July 21, 1967.

ROC-LASTPAD

For Ironing Board Pad (Int. Cl. 21).
First use Mar. 14, 1967.

SN 292,071. Samuel Bingham Company, Chicago, Ill. Filed Feb. 28, 1968.

ROBERTO

For Rolls for Use in Mangels or the Like (Int. Cl. 7).
First use Jan. 24, 1968.

Class 26—Measuring and Scientific Appliances

SN 247,935. Albert Lins, Kusnacht, Zurich, Switzerland. Filed June 13, 1966.

Priority claimed under Sec. 44(d) on Swiss Reg. No. 216,049, dated Feb. 22, 1966.
For Central Heating Equipment and Heating Control Apparatus—Namely, Automatic Controllers for Controlling Temperature, Pressure, Liquid Level, Rate of Flow, and Like Variables (Int. Cl. 9).

SN 253,305. General Time Corporation, Stamford, Conn. Filed Aug. 29, 1966.

WESTCLOX

For Weather Instruments—Namely, Thermometers, Hygrometers, and Barometers (Int. Cl. 9).
First use July 5, 1966.

SN 257,063. Medelco, Incorporated, Wood Dale, Ill. Filed Oct. 24, 1966.

For Hospital Data Communication System, Comprising Data Preparation Means, Data Sending Means, Data Storage Means, and Data Readout Means (Int. Cl. 9).
First use October 1964.

SN 258,968. McCall Corporation, New York, N.Y., assignee of Elsie Millray Ames, Kaneohe, Hawaii. Filed Nov. 18, 1966.

POLYNESIAN

For Patterns for Use in the Making of Clothing (Int. Cl. 16).
First use Aug. 3, 1959.

SN 259,329. Metrohm Ltd., Herisau (Appenzell), Switzerland. Filed Nov. 23, 1966.

METROHM

For Measuring Instruments for the Measurement of Chemical Values and Other Values Characterizing a Chemical State as Well as Chemical Analysis, Which Instruments Are: Coulometric Apparatus; pH Meters; Colorimeters; Conductivity Meters; Potentiometers; Polarization Meters; Titrating Apparatus; and Recorders for the Foregoing Instruments (Int. Cl. 9).
First use April 1943; in commerce July 1955.

SN 264,274. Scott Industries, Inc., Lancaster, N.Y. Filed Feb. 9, 1967.

SCOTT

Owner of Reg. Nos. 597,173, 842,934, and others.
For Laboratory Equipment and Apparatus for Teaching Engineering Subjects — Namely, Equipment for Testing Load, Stress, and Strain of Mechanical Structures Such as Trusses, Beams, and the Like, and the Materials of Which Such Structures Are Made; Fluid Flow Demonstration and Experimental Apparatus; Analog Fluid Circuit Simulator; and Polariscope Apparatus for Determining and Observing Stress (Int. Cl. 9).
First use on or about June 1, 1966.

SN 269,782. Orthopedic Equipment Company, Inc., Bourbon, Ind. Filed Apr. 21, 1967.

OSSIMETER

For Measuring Gauge for Surgical X-Ray Photographs (Int. Cl. 9).
First use Feb. 7, 1966.

SN 270,351. Canon Camera Kabushiki Kaisha, Ohta-ku, Tokyo, Japan. Filed May 1, 1967.

CANOMATIC

Owner of U.S. Reg. Nos. 603,299, 779,855, and others.
For Photographic Equipment—Namely, Cameras and Parts Thereof, Camera Lenses, Telephoto Lenses, View Finders, Range Finders, Combined Range Finder and View Finder, Frame Finders, Frame Finders for Sport and Other Action Photographs, Exposure Meters, Flash Units and Parts Thereof; Photographic Accessories, Namely, Camera Holders, Tripods, Flash Synchronizers, Reflectors, Bulb Adapters, Cable Releases, Film Magazines, Self-Timers, Film Take-Up Spools, Lens Mounts, Lens Caps, Lens Hoods, Light Filters, Circuit Testers for Flash Guns and Bulbs, Developing Tanks, and Cases Therefor (Int. Cl. 9).
First use May 1, 1959; in commerce Jan. 10, 1960.

SN 270,352. Canon Camera Kabushiki Kaisha, Ohta-ku, Tokyo, Japan. Filed May 1, 1967.

QL

For Photographic Equipment—Namely, Cameras and Parts Thereof, Camera Lenses, Telephoto Lenses, View Finders, Range Finders, Combined Range Finder and View Finder, Frame Finders, Frame Finders for Sport and Other Action Photographs, Exposure Meters, Flash Units and Parts Thereof; Photographic Accessories, Namely, Camera Holders, Tripods, Flash Synchronizers, Reflectors, Bulb Adapters, Cable Releases, Film Magazines, Self-Timers, Film Take-Up Spools, Lens Mounts, Lens Caps, Lens Hoods, Light Filters, Circuit Testers for Flash Guns and Bulbs, Developing Tanks, and Cases Therefor (Int. Cl. 9).
First use May 1, 1959; in commerce Jan. 10, 1960.

SN 270,465. Airpax Electronics Incorporated, Cambridge, Md. Filed May 2, 1967.

TACH·TROL

For Electronic Control Tachometers (Int. Cl. 9).
First use Mar. 17, 1967.

SN 277,565. North American Rockwell Corporation, El Segundo, Calif., by change of name from North American Aviation, Inc., El Segundo, Calif. Filed Aug. 4, 1967.

RadPac

For Radioisotope Source of a Detector System for Measurement of Distance (Int. Cl. 9).
First use Feb. 23, 1967.

SN 281,107. Physio-Control Corporation, Seattle, Wash. Filed Sept. 25, 1967.

POLYRHYTHM

For Electronic Arrhythmia Simulator for Teaching Medical Personnel How To Interpret Electrocardiograms (Int. Cl. 9).
First use Sept. 6, 1967.

SN 281,926. Shandon Scientific Company Limited, London, England. Filed Oct. 5, 1967.

VOKAM

For Electrochemical Reaction Electrophoresis Power Supply Units, Including Parts Thereof (Int. Cl. 9).
First use 1955; in commerce 1956.

SN 284,506. Roberts Filter Manufacturing Company, Inc., Darby, Pa. Filed Nov. 9, 1967.

ROBERTS MANHATTAN PROCESS
RMP

The drawing is lined for blue, green, and gold, and the particular colors are disclaimed as an integral part of the mark. The word "Process" is disclaimed apart from the mark as shown.
For Remote Metering and Control Consoles for Water Processing Plants (Int. Cl. 9).
First use on or about May 20, 1965.

SN 285,460. Radio Corporation of America, New York, N.Y. Filed Nov. 22, 1967.

VIDEOCOMP

For Electronic Typesetters (Int. Cl. 7).
First use at least as early as Jan. 27, 1967.

SN 288,428. Crescent Technology Corporation, Newport Beach, Calif. Filed Jan. 9, 1968.

CRESTEC

For Rectilinear Displacement Transducers (Int. Cl. 9).
First use on or before Dec. 8, 1967.

SN 289,891. Graflex, Inc., Rochester, N.Y. Filed Jan. 30, 1968.

STUDY MATE

For Viewers for Photographic Film Strips (Int. Cl. 9).
First use Dec. 20, 1967.

Class 27 — Horological Instruments

SN 280,057. H. E. Homberger, ci-devant International Watch Co., Schaffhouse, Switzerland. Filed Sept. 11, 1967.

AQUATIMER

Owner of Swiss Reg. No. 221,778, dated Nov. 8, 1966.
For Watches, Watch Movements, Cases and Dials (Int. Cl. 14).
First use April 1967; in commerce August 1967.

SN 288,349. Robertshaw Controls Company, Richmond, Va. Filed Jan. 8, 1968.

FAIRVIEW

For Alarm Clocks (Int. Cl. 14).
First use May 27, 1964.

Class 28 — Jewelry and Precious-Metal Ware

SN 269,305. Feature Ring Co., Inc., New York, N.Y. Filed Apr. 17, 1967.

CONTOURA

For Finger Rings and Finger Ring Mountings Made of Precious Metal (Int. Cl. 14).
First use on or about Apr. 10, 1967.

SN 272,611. David Karp Company, Inc., New York, N.Y. Filed May 29, 1967.

hanDKraft
144

Applicant disclaims the term "Handcraft" apart from the mark as shown. Owner of Reg. Nos. 630,874 and 649,300.
For Diamond Finger Rings and Diamond Jewelry (Int. Cl. 14).
First use Apr. 25, 1967.

SN 274,401. Sidney S. Bell, Tully, N.Y. Filed June 21, 1967.

"LUG HEADS"

For Engraved Sterling Silver Big Game Heads, Used for Gun Decorating (Int. Cl. 14).
First use July 1963.

SN 280,217. John J. De Santo, Edgewater, N.J. Filed Sept. 13, 1967.

J D S

For Jewelry (Int. Cl. 14).
First use June 6, 1967.

Class 29 — Brooms, Brushes, and Dusters

SN 288,566. Vistron Corporation, Cleveland, Ohio. Filed Jan. 10, 1968.

DUAL ACTION

Owner of Reg. No. 691,263.
For Toothbrushes (Int. Cl. 21).
First use July 10, 1964.

Class 31 — Filters and Refrigerators

SN 262,871. Keating of Chicago, Inc., Chicago, Ill. Filed Jan. 19, 1967.

NUTROILATOR

For Cooking Oil Filtering Apparatus for Deep Fat Fryers (Int. Cl. 11).
First use Apr. 8, 1965.

SN 278,983. Millipore Corporation, Bedford, Mass. Filed Aug. 24, 1967.

ION-X-CARTRIDGE

For Mixed Bed Demineralizers in Cartridge Form, for Use in Water Purification Systems (Int. Cl. 1).
First use July 19, 1967.

SN 286,732. Super Freeze Company, Burbank, Calif. Filed Dec. 11, 1967.

E-Z PAK

For Plug-In Packaged Refrigeration Systems for Use in Cooler and Refrigerator Rooms (Int. Cl. 11).
First use on or about Aug. 20, 1966.

Class 32 — Furniture and Upholstery

SN 285,314. Direct Mattress Co., Inc., d.b.a. Imperial Bedding Co., Dallas, Tex. Filed Nov. 21, 1967.

COMFY-DOWN

For Mattresses, Box Springs, Cushions, and Pillows (Int. Cl. 20).
First use in 1923 on mattresses.

SN 296,468. The Tappan Company, Mansfield, Ohio. Filed Apr. 24, 1968.

NAUTILUS

Owner of Reg. No. 684,450.
For Cabinets for Paper Dispensers and the Like (Int. Cl. 20).
First use August 1965.

Class 34 — Heating, Lighting, and Ventilating Apparatus

SN 264,503. The Atlanta Stove Works, Inc., Atlanta, Ga. Filed Feb. 13, 1967.

SPORTSMAN

For Outdoor Bar-B-Que Grills (Int. Cl. 11).
First use Feb. 25, 1941.

SN 272,688. The Susquehanna Corporation, Alexandria, Va., by merger from Atlantic Research Corporation, Alexandria, Va. Filed May 31, 1967.

Owner of Reg. Nos. 715,181 and 773,362.
For Gas Purifying, Treating and Conditioning Apparatus—Namely, Adsorbers, Burners, Reactors, Controlled Atmosphere Generating Systems, Dehumidifiers, and Components Therefor (Int. Cl. 11).
First use December 1962 on dehumidification equipment.

SN 273,092. Muraplex Limited, Irvine, Ayrshire, Scotland. Filed June 5, 1967.

MURAPLAX

For Radiant Heating Wall Panels (Int. Cl. 11).
First use Aug. 25, 1965; in commerce March 1966.

SN 277,452. Fedtro, Inc., Rockville Centre, N.Y. Filed Aug. 3, 1967.

HOT SHOT

For Electric Soldering Guns (Int. Cl. 9).
First use on or about June 21, 1960.

SN 297,928. John Oster Manufacturing Co., Milwaukee, Wis. Filed May 13, 1968.

OSTER

Owner of Reg. Nos. 515,517, 834,711, and 835,917.
For Humidifiers, and Parts Thereof (Int. Cl. 11).
First use Apr. 4, 1960.

Class 35 — Belting, Hose, Machinery Packing, and Nonmetallic Tires

SN 283,084. Aquappliances, Inc., Saugus, Calif. Filed Oct. 23, 1967.

SPINDO SEAL

The word "Seal" is disclaimed apart from the mark as shown.
For Axle Seals (Int. Cl. 7).
First use Jan. 3, 1967.

SN 286,077. The Armstrong Rubber Company, West Haven, Conn. Filed Dec. 4, 1967.

FIVE STAR

For Pneumatic Tires (Int. Cl. 12).
First use on or about Apr. 19, 1966.

SN 288,307. The Goodyear Tire & Rubber Company, Akron, Ohio. Filed Jan. 8, 1968.

POLYGLAS

For Tires (Int. Cl. 12).
First use Nov. 22, 1967.

SN 289,306. J. Payen Ltd., Slough, England. Filed Jan. 22, 1968.

Payen

For Gaskets and Oil Seals (Int. Cl. 17).
First use 1948; in commerce 1948.

Class 36 — Musical Instruments and Supplies

SN 263,907. General Music Strings Limited, Pontypridd, Wales. Filed Feb. 3, 1967.

Picato

Owner of U.S. Reg. No. 742,000.
For Strings for Musical Instruments (Int. Cl. 15).
First use April 1953; in commerce April 1963.

SN 267,048. Marlo Ketchum, d.b.a. Marlo Record Co., Port Jervis, N.Y. Filed Mar. 17, 1967.

MARLO

For Phonograph Records (Int. Cl. 9).
First use Mar. 18, 1966.

SN 277,912. Vincent Guaraldi, d.b.a. D & D Record Company, Mill Valley, Calif. Filed Aug. 9, 1967.

D & D

For Phonograph Records (Int. Cl. 9).
First use July 18, 1967.

SN 280,853. Brother Records, Inc., Los Angeles, Calif. Filed Sept. 21, 1967.

Brother records

Applicant disclaims the word "Records" apart from the mark as shown.
For Phonograph Records (Int. Cl. 9).
First use July 10, 1967.

SN 287,728. Delta Promotions, Inc., Vincennes, Ind. Filed Dec. 28, 1967.

DELTAPE

For Cases Consisting of a Tape Recorder and Magnetic Tapes (Int. Cl. 9).
First use Nov. 14, 1967.

SN 290,261. Dearborn Records, Inc., Dearborn, Mich. Filed Feb. 5, 1968.

DEARBORN

For Phonograph Records (Int. Cl. 9).
First use June 2, 1964.

SN 298,286. Walter Gravlin, Miami, Fla. Filed May 16, 1968.

PRAISE

For Phonograph Records (Int. Cl. 9).
First use Mar. 15, 1966.

Class 37 — Paper and Stationery

SN 251,742. Paper Converting Corporation, Chicago, Ill. Filed Aug. 4, 1966.

ULTRA-PAK

For Laminated Combination of Plastic Film and Paper Used To Make Bags, Envelopes, and Like Products (Int. Cl. 16).
First use Apr. 18, 1966.

SN 262,277. Nekoosa-Edwards Paper Company, Port Edwards, Wis. Filed Jan. 10, 1967.

FINE WEAVE

For Bond, Ledger, Writing, and Printing Paper (Int. Cl. 16).
First use summer of 1947.

SN 263,825. Fukui & Company, Ltd., Kigashi-ku, Osaka, Japan. Filed Feb. 2, 1967.

Delica

For Stationery and Office Supplies in General—Namely, Pens, Pencils, and Marking Pens (Int. Cl. 16).
First use Feb. 22, 1935; in commerce Mar. 15, 1966.

SN 268,544. Jerome S. Wittenberg, West Orange, N.J. Filed Apr. 6, 1967.

EXECULITE

For Illuminated Memorandum Pad Holder (Int. Cl. 16).
First use Mar. 21, 1967.

SN 281,200. Imperial Wallpaper Mill, Inc., Cleveland, Ohio. Filed Sept. 26, 1967.

IMPERIAL
Washable
WALLCOVERINGS

Applicant disclaims the term "Washable Wallcoverings" apart from the mark as shown. Owner of Reg. Nos. 438,248 and 697,832.
For Paper Wallcoverings (Int. Cl. 27).
First use Jan. 15, 1967.

SN 282,275. Delaney Books Incorporated, Brooklyn, N.Y. Filed Oct. 11, 1967.

THE DELANEY BOOK

Applicant disclaims the word "Book" apart from the mark as shown, without prejudice to any of its common law rights therein.
For Binders, Pages Containing Pockets To Hold Student Record Cards, and Cards for Use Therein, Sold Separately or as a Unit (Int. Cl. 16).
First use as early as 1920.

Class 38 — Prints and Publications

SN 256,404. Horizon House-Microwave, Inc., Dedham, Mass. Filed Sept. 30, 1966.

MICROWAVE JOURNAL

Owner of Reg. No. 687,256.
For Magazine Published Monthly (Int. Cl. 16).
First use July 18, 1958.

SN 262,956. The Mutual Benefit Life Insurance Company, Newark, N.J. Filed Jan. 20, 1967.

OF COUNSEL

For Periodically Issued Booklet (Int. Cl. 16).
First use Feb. 28, 1966.

SN 269,638. William Johnston Cocke, Jr., d.b.a. Clarendon Press of No. Carolina, Asheville, N.C. Filed Apr. 20, 1967.

CLARENDON PRESS OF NO. CAROLINA

No claim is made of any right to the exclusive use, apart from the mark as a whole, of the geographical term of "No. Carolina."
For Maps (Int. Cl. 16).
First use Mar. 28, 1967.

SN 269,907. Market Publications, Inc., New Canaan, Conn. Filed Apr. 24, 1967.

HNH PRODUCT NEWS

Applicant disclaims the words "Product News" in the mark.
For Periodical Newspaper Describing New Products That May Be Used and Purchased by Hospitals and Nursing Homes (Int. Cl. 16).
First use September 1965.

SN 275,703. Surfside News, Kill Devil Hills, N.C. Filed July 10, 1967.

SURFSIDE NEWS

For Visitors' Guide Magazine Issued Weekly During the Summer Season (Int. Cl. 16).
First use May 14, 1950.

SN 276,404. The George S. Bond Co., Indianapolis, Ind. Filed July 20, 1967.

LAB-FAX

For Manual of Technical Eyeglass Frame Information for the Optical Shop, and Replacement and Supplemental Sheets Therefor (Int. Cl. 16).
First use June 15, 1967.

SN 279,160. American Book Company, New York, N.Y. Filed Aug. 28, 1967.

THE READ SYSTEM

For Printed Publications—Namely, Books and Pamphlets for School Use for Young Children (Int. Cl. 16).
First use June 8, 1967.

SN 280,315. The Guild for Religious Architecture, Washington, D.C. Filed Sept. 14, 1967.

FAITH & FORM

For Magazine Published Quarterly (Int. Cl. 16).
First use Aug. 15, 1967.

SN 281,903. MacNair-Dorland Company, New York, N.Y. Filed Oct. 5, 1967.

BUILDING SERVICES CONTRACTOR

For Magazine (Int. Cl. 16).
First use on or about Sept. 1, 1967.

SN 282,125. Northern Ohio Sugar Company, Findlay, Ohio. Filed Oct. 9, 1967.

UP-BEET

For Booklet Concerned With the Sugar Beet Industry, Published From Time to Time (Int. Cl. 16).
First use Oct. 2, 1967.

SN 282,394. The Reader's Digest Association, Inc., New Castle, N.Y. Filed Oct. 12, 1967.

MINERVA PRESS

For Books (Int. Cl. 16).
First use Sept. 13, 1967.

SN 285,404. EG & G, Inc., Bedford, Mass. Filed Nov. 22, 1967.

SAGE

For Employee Information Magazine (Int. Cl. 16).
First use in or about May 1966.

SN 285,711. Avant-Garde Media, Inc., New York, N.Y. Filed Nov. 28, 1967.

AVANT GARDE

For Magazine (Int. Cl. 16).
First use Nov. 1, 1967.

SN 286,000. Cyril J. Conway, d.b.a. Greater Rochester Homebuyers Guide, Pittsford, N.Y. Filed Dec. 1, 1967.

For Monthly Review of Living Accommodations in a Specific Geographical Area (Int. Cl. 16).
First use at least as early as Sept. 7, 1967.

SN 286,937. International Data Corporation, Newtonville, Mass. Filed Dec. 14, 1967.

IDC MARKET INTERFACE

For Newsletter Published Monthly (Int. Cl. 16).
First use Nov. 1, 1967.

SN 293,987. Johnston & Associates, Inc., Fairfield, Conn. Filed Mar. 25, 1968.

THE BINNACLE

For Magazine Published Monthly (Int. Cl. 16).
First use Jan. 22, 1968.

SN 298,285. Fotomat Corporation, La Jolla, Calif. Filed May 16, 1968.

FOTOFAX

For Corporate Newspaper Published Monthly (Int. Cl. 16).
First use May 1, 1968.

Class 39 — Clothing

SN 270,665. Leroy Bryan, d.b.a. Bryan Manufacturing Company, East Millsboro, Pa. Filed May 5, 1967.

Jeanie Bryan fashions

The name "Jeanie Bryan" is fanciful and not the name of any living individual. Without relinquishing any of its common law rights, applicant disclaims the word "Fashions" apart from the mark as shown.
For Skirts, Blouses, Jackets, Coats, and Pants (Int. Cl. 25).
First use January 1966.

SN 272,161. Harold E. Canaga, Jr., d.b.a. Poly-Prim Plastics Company, Omaha, Nebr. Filed May 23, 1967.

Poly-Prim

For Aprons (Int. Cl. 25).
First use at least as early as Apr. 1, 1962.

SN 273,269. Drum Mfg. Co., Inc., Charlotte, N.C. Filed June 7, 1967.

HORN

For Boys' Pants, Slacks, Jeans, and Shorts (Int. Cl. 25).
First use Mar. 13, 1967.

SN 274,662. Schmelczer Knitting Mills, Inc., Los Angeles, Calif. Filed June 23, 1967.

Toluca KNITS OF CALIFORNIA

No claim is made to the words "Knits of California" apart from the mark as shown without waiving any common law rights therein.
For Ladies' Knit Sweaters, Skirts, and Slacks (Int. Cl. 25).
First use May 15, 1967.

SN 276,165. Henry Ow, d.b.a. American Manufacturing Company, San Francisco, Calif. Filed July 17, 1967.

Swaby's

The drawing is lined for blue and red.
For Dungarees (Int. Cl. 25).
First use on or about Jan. 1, 1967.

SN 278,625. Weyenberg Shoe Manufacturing Company, Milwaukee, Wis. Filed S.R. Aug. 18, 1967; Am. P.R. June 12, 1968.

STANFORD

For Men's Leather Shoes (Int. Cl. 25).
First use July 9, 1940.

SN 284,981. Barringer Knitting Mills, Inc., Philadelphia, Pa. Filed Nov. 16, 1967.

yes is this sweater's middle name
the yes comes from polyester fiber:

Without waiving its common law rights herein, applicant makes no claim to the wording "Polyester Fiber" apart from the mark as shown.
For Sweaters (Int. Cl. 25).
First use Oct. 31, 1967.

SN 285,067. Sarong, Inc., Dover, Del. Filed Nov. 16, 1967.

CRISS-CROSS ACTION

Owner of Reg. No. 179,285.
For Brassieres (Int. Cl. 25).
First use Oct. 26, 1967.

SN 285,748. McGregor-Doniger Inc., New York, N.Y. Filed Nov. 28, 1967.

Doug Sanders

"Doug Sanders" is the name of a living individual whose consent is of record.
For Men's Clothing—Namely, Slacks, Sweaters, Shirts, Coats, and Jackets (Int. Cl. 25).
First use Sept. 14, 1967.

SN 286,371. Sea & Ski Corporation, San Francisco, Calif. Filed Dec. 6, 1967.

SEA & SKI

Owner of Reg. Nos. 746,568, 827,197, and others.
For Beach Shifts and Sun Dresses (Int. Cl. 25).
First use Oct. 23, 1967.

SN 286,719. Puritan Fashions Corporation, New York, N.Y. Filed Dec. 11, 1967.

SWEET APPLE

For Women's Dresses (Int. Cl. 25).
First use Nov. 14, 1967.

SN 287,062. Robert Hall Clothes, Inc., d.b.a. Robert Hall Clothes, New York, N.Y. Filed Dec. 18, 1967.

GOLDEN EMBLEM

Owner of Reg. No. 685,207.
For Hose (Int. Cl. 25).
First use on or about Nov. 6, 1967.

SN 287,072. Interco Incorporated, St. Louis, Mo. Filed Dec. 18, 1967.

Cliché

For Shoes (Int. Cl. 25).
First use Oct. 11, 1967.

SN 287,735. Illinois Glove Company, Skokie, Ill. Filed Dec. 28, 1967.

EZEE BREEZEE

For Gloves (Int. Cl. 25).
First use Oct. 4, 1967.

SN 287,760. Poirette Corsets, Inc., New York, N.Y. Filed Dec. 28, 1967.

BORN FREE

For Women's Foundation Garments (Int. Cl. 25).
First use Dec. 4, 1967.

SN 287,847. Webster Clothes, Inc., Baltimore, Md. Filed Dec. 29, 1967.

WEBSTER

Owner of Reg. No. 573,884.
For Men's Suits, Topcoats, Sport Coats, Trousers, Raincoats, and Slack Suits (Int. Cl. 25).
First use January 1949.

SN 290,933. Rosenbaum & Hochberg, Inc., New York, N.Y. Filed Feb. 13, 1968.

Bernardi

For Fur Coats, Jackets, Capes, Stoles, and Hats (Int. Cl. 25).
First use January 1962.

SN 295,035. The Kandahar Sportswear Co., Inc., Allentown, Pa. Filed Apr. 5, 1968.

AQUA-LYLE

For Knit Shirts and Sweaters (Int. Cl. 25).
First use Nov. 15, 1967.

SN 295,702. Beach Mates of California, Inc., Los Angeles, Calif. Filed Apr. 16, 1968.

Beach Mates

For Women's Swim and Beach Wear (Int. Cl. 25).
First use Dec. 24, 1965.
Subj. to Intf. with SN 279,106.

SN 296,916. Cooper's, Incorporated, Kenosha, Wis. Filed Apr. 30, 1968.

ULTRA·II

For Underwear and T-Shirts (Int. Cl. 25).
First ues Mar. 21, 1968.

Class 40—Fancy Goods, Furnishings, and Notions

SN 288,686. Fashion Tress, Inc., Miami Beach, Fla. Filed Jan. 12, 1968.

ELEGANTE

For Ladies' Wigs and Hairpieces (Int. Cl. 26).
First use June 1, 1965.

Class 42—Knitted, Netted, and Textile Fabrics, and Substitutes Therefor

SN 285,136. The Kendall Company, Walpole, Mass. Filed Nov. 17, 1967.

WEBHIDE

For Nonwoven Fabrics Comprising Cotton, Rayon, or Synthetic Fibers, or Mixtures Thereof, as Bases for Artificial Leather (Int. Cl. 24).
First use Sept. 19, 1967.

SN 288,926. American Associated Companies, Incorporated, Atlanta, Ga. Filed Jan. 17, 1968.

a

Chroma-Color

For Tablecloths, Place Mats, Napkins, and Table Runners (Int. Cl. 24).
First use Nov. 16, 1967.

SN 289,637. Wyandotte Industries Corporation, New York, N.Y. Filed Jan. 25, 1968.

KINGS ROW

For Woolen Fabrics (Int. Cl. 24).
First use Nov. 17, 1967.

SN 289,648. Albany Felt Company, Albany, N.Y. Filed Jan. 26, 1968.

DURASLEEVE

For Shrinkable Fabric Used in the Press Section of a Papermaking Machine (Int. Cl. 24).
First use on or about July 1, 1966.

SN 289,650. Albany Felt Company, Albany, N.Y. Filed Jan. 26, 1968.

DURAFORM

For Woven Screen Forming Fabric for Use in a Papermaking Machine (Int. Cl. 24).
First use on or about Nov. 15, 1967.

SN 289,651. Annin & Co., New York, N.Y. Filed Jan. 26, 1968.

Acryl ANNIN SINCE 1847

Owner of Reg. No. 514,934.
For Bunting (Int. Cl. 24).
First use February 1967; Jan. 3, 1847, as to "Annin."

SN 289,733. Universal Mayflower Corporation, New York, N.Y. Filed Jan. 26, 1968.

ECONOMI-PAKT

For Woolen, Cotton, Silk, Linen, and Synthetic Fabrics (and Blends or Mixtures Thereof), in the Piece (Int. Cl. 24).
First use Nov. 20, 1967.

SN 298,082. Beaunit Corporation, New York, N.Y. Filed May 14, 1968.

FEATHERLOR "36"

Owner of Reg. No. 637,492.
For Brushed Tricot of Man-Made Fibers (Int. Cl. 24).
First use on or about Apr. 24, 1968.

SN 298,083. Beaunit Corporation, New York, N.Y. Filed May 14, 1968.

TAFF-E-SET

For Nylon Taffeta for Use in Lingerie, Nurses' Uniforms, and Men's Shirts (Int. Cl. 24).
First use on or about Mar. 29, 1968.

Class 44—Dental, Medical, and Surgical Appliances

SN 265,196. S. James Krygier, Wilmington, Del. Filed Feb. 21, 1967.

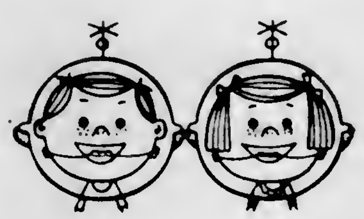

For Orthodontic Equipment for Use in Straightening Teeth—Namely, Bands, Brackets, Spacers, Wires, and Braces (Int. Cl. 10).
First use at least as early as 1961.

SN 276,948. Joern J. Olshausen, Ph.D., Chicago, Ill. Filed July 27, 1967.

TOETOTE

For Protective Toe Cots (Int. Cl. 10).
First use May 13, 1967.

SN 285,664. Hydro Research Corporation, Wills Point, Tex. Filed Nov. 27, 1967.

HYDRO-CLAVE

For Washing and Sterilizing Machines for Medical, Dental, and Surgical Articles and Instruments (Int. Cl. 11).
First use Aug. 10, 1967.

SN 286,921. Foremost-McKesson, Inc., d.b.a. Gentec Hospital Supply Company, New York, N.Y. Filed Dec. 14, 1967.

SPOZASLEEVE

For Disposable Covering for Armboards Used in Hospitals To Support Patient's Arm in Adminstering Intravenous Solutions (Int. Cl. 5).
First use at least as early as Sept. 8, 1967.

SN 291,061. Gentex Corporation, New York, N.Y. Filed Feb. 14, 1968.

SONEX

For Sound Attenuating Earcups (Int. Cl. 10).
First use Feb. 2, 1968.

Class 46—Foods and Ingredients of Foods

SN 259,428. International Bakerage, Inc., Atlanta, Ga. Filed Nov. 25, 1966.

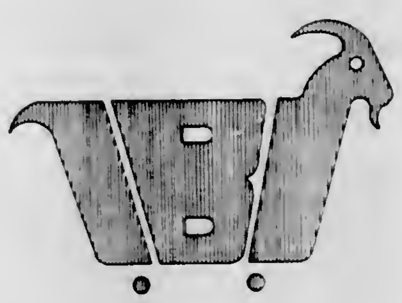

The drawing is lined for red.
For Bakerage By-Products To Be Used for Animal Consumption, Packaged in a Wheeled Receptacle, and Sold as a Unit (Int. Cl. 31).
First use on or about May 18, 1965.

SN 267,752. Edward W. Hartman, d.b.a. Bee-Tree Honey, Lee's Summit, Mo. Filed Mar. 28, 1967.

"GREAT PLAINS"

For Honey (Int. Cl. 30).
First use during July 1966.

SN 271,367. Forrest D. Hill, d.b.a. Hereford Produce Company, Hereford, Tex. Filed May 12, 1967.

The drawing is lined for red, blue, and green.
For Whole Raw Potatoes (Int. Cl. 31).
First use in or before 1951.

SN 274,632. Kelly-Clark, Inc., Loveland, Colo. Filed June 23, 1967.

GOURMĀTO

For Fresh, Vine-Ripened Hydroponically Grown Tomatoes (Int. Cl. 31).
First use Apr. 17, 1967.

SN 277,150. Consolidated Foods Corporation, d.b.a. Joe Lowe Company, Englewood, N.J. Filed July 31, 1967.

GLACÉ CONTINENTAL

Applicant disclaims the word "Glace" apart from the mark as shown.
For Frozen Sherbet Having a Confectionery Coating and Concentrates for Making the Same (Int. Cl. 30).
First use May 22, 1967.

SN 279,048. Bestmart, Inc., Cleveland, Ohio. Filed Aug. 25, 1967.

FOOD TOWN

Owner of Reg. No. 728,608.
For Canned Vegetables, Canned Fruits, Canned Vegetable Juices, Canned Evaporated Milk, Vegetable Shortening, Salad Dressing, and Dill Pickles (Int. Cls. 29 and 32).
First use June 1963.

SN 281,824. C. Shippam Limited, Chichester, Sussex, England. Filed Oct. 4, 1967.

SHIPPAM'S

Owner of U.S. Reg. No. 721,731.
For Meat Pastes and Fish Pastes (Int. Cl. 29).
First use 1906; in commerce 1961.

SN 282,647. Wilson & Co., Inc., Chicago, Ill. Filed Oct. 16, 1967.

FESTIVAL

Owner of Reg. No. 805,706.
For Frankfurters (Int. Cl. 29).
First use June 6, 1967.

SN 282,986. Country Kitchen Incorporated, of Middletown, Ohio, Cincinnati, Ohio. Filed Oct. 20, 1967.

Applicant disclaims use of the word "Beef," apart from the mark, without relinquishing any of its common law rights therein.
For Sandwiches (Int. Cl. 29).
First use Oct. 10, 1967.

SN 283,097. Chanticleer, Inc., Miami, Fla. Filed Oct. 23, 1967.

The words "Gran Muchacho" are Spanish for "big boy."
For Fresh Plantains and Bananas (Int. Cl. 31).
First use Oct. 7, 1967.

SN 287,152. The Dan Dee Pretzel and Potato Chip Company, Cleveland, Ohio. Filed Dec. 18, 1967.

DAN-DEE

Owner of Reg. Nos. 506,466, 666,677, and others.
For Mixed Nuts (Int. Cl. 29).
First use on or about Sept. 8, 1967.

SN 288,968. National Biscuit Company, New York, N.Y. Filed Jan. 16, 1968.

CREATION

For Ice Cream Mix Frozen Desert (Int. Cl. 30).
First use Nov. 28, 1967.

SN 288,971. National Biscuit Company, New York, N.Y. Filed Jan. 16, 1968.

NILLA

For Cookies (Int. Cl. 30).
First use Nov. 3, 1967.

SN 288,972. National Biscuit Company, New York, N.Y. Filed Jan. 16, 1968.

IMPROMPTU

For Ice Cream Mix Frozen Dessert (Int. Cl. 30).
First use Nov. 28, 1967.

SN 289,184. General Foods Corporation, White Plains, N.Y. Filed Jan. 19, 1968.

Owner of Reg. Nos. 712,599, 742,737, and 769,672.
For Instant Soup (Int. Cl. 30).
First use Sept. 25, 1967.

SN 289,843. Stonington Packing Co., Inc., Stonington, Maine. Filed Jan. 29, 1968.

BETSY'S

For Canned Fish (Int. Cl. 29).
First use 1953.

SN 289,846. Stonington Packing Co., Inc., Stonington, Maine. Filed Jan. 29, 1968.

COASTAL KITCHEN

For Canned Fish (Int. Cl. 29).
First use 1946.

SN 293,981. Dean Foods Company, Franklin Park, Ill. Filed Mar. 25, 1968.

MOO

For Dairy Products—Namely, Skimmed Milk (Int. Cl. 29).
Filed on or about June 17, 1954.

SN 295,487. National Biscuit Company, New York, N.Y. Filed Apr. 12, 1968.

TOTE BAR

Applicant disclaims the word "Bar" apart from the mark as shown.
For Bakery Product—Namely, Filled Biscuits for Use as a Breakfast Food or as a Snack Food (Int. Cl. 30).
First use Mar. 28, 1968.

Class 47 — Wines

SN 249,096. Von Stiehl Wine, Inc., Algoma, Wis. Filed June 27, 1966.

Owner of Reg. No. 836,862.
For Cherry Wine (Int. Cl. 33).
First use Aug. 19, 1963.

Class 50 — Merchandise Not Otherwise Classified

SN 276,681. Owens Plastic Products Corporation, Palatine, Ill. Filed July 24, 1967.

FLEXI-DOME

For Threaded Caps for Containers (Int. Cl. 20).
First use on or about Apr. 12, 1965.

SN 277,276. The Greif Bros. Cooperage Corporation, Delaware, Ohio. Filed Aug. 1, 1967.

Applicant disclaims the word "Hangers" and the representation of the goods apart from the mark as shown, but such disclaimer does not constitute a waiver of applicant's common law rights.
For Wire Garment Hangers (Int. Cl. 26).
First use Aug. 17, 1944.

SN 281,792. Greensteel-Korok, Inc., Dixonville, Pa. Filed Oct. 4, 1967.

KOR-ODIZED

For Metal Trim for Chalkboards, Tackboards, Display Bulletin and Trophy Cases, Sold as a Part Thereof (Int. Cl. 20).
First use Jan. 1, 1965.

SN 283,666. Hurricane Awning Shutter Co., Inc., Hialeah, Fla. Filed Oct. 30, 1967.

Applicant disclaims the words "Hurricane Awning" apart from the mark as shown.
For Awnings (Int. Cl. 22).
First use Oct. 1, 1954.

Class 51 — Cosmetics and Toilet Preparations

SN 254,051. Hanorah Italiana S.p.A., Milan, Italy. Filed Sept. 8, 1966.

HANORAH

Priority claimed under Sec. 44(d) on Italian application filed Mar. 8, 1966; Reg. No. 180,898, dated Sept. 10, 1967. The lining in the drawing is for the purpose of indicating shading only. Owner of U.S. Reg. No. 809,660.
For Cosmetic Products for the Treatment of the Skin—Namely, Cosmetic Skin Cleansing, Cosmetic Purifying, Hydrating, Cosmetic Tonifying and Nourishing Creams and Skin Lotions, Bath Lotions; Cosmetic Body Treatment Creams; Cosmetic Preparations for the Treatment of the Hair; Make-Up Products—Namely, Foundations, Powders, Lipsticks, Lip Pencils, Eye Shadows, Eye Liners, Eye Pencils; Nail Varnishes; Sun-Tanning Lotions; and Personal Deodorants (Int. Cls. 3 and 5).

SN 277,076. Snyder's Drug Stores, Inc., Hopkins, Minn. Filed July 28, 1967.

VAN-DALE

Owner of Reg. No. 822,092.
For Personal Deodorant (Int. Cl. 5).
First use Apr. 26, 1967.

SN 277,253. Bristol-Myers Company, New York, N.Y. Filed Aug. 1, 1967.

FRESH & WHITE

Applicant disclaims the word "White" apart from the mark as shown.
For Denture Cleanser (Int. Cl. 3).
First use June 22, 1967.

SN 281,669. Avon Products, Inc., New York, N.Y. Filed Oct. 3, 1967.

BANGALORE

For Cologne, After Shave Lotion, Personal Aerosol Deodorant, Bath Oil, After Shower Foam, and Talcum Powder (Int. Cls. 3 and 5).
First use Sept. 18, 1967.

SN 281,672. Avon Products, Inc., New York, N.Y. Filed Oct. 3, 1967.

STEEPLECHASE

For Cologne, After Shave Lotion, Personal Aerosol Deodorant, Bath Oil, After Shower Foam, and Talcum Powder (Int. Cls. 3 and 5).
First use Sept. 18, 1967.

SN 281,676. Avon Products, Inc., New York, N.Y. Filed Oct. 3, 1967.

ON VIEW

For Cologne, After Shave Lotion, Talcum Powder, Bracing Lotion, Hair Dress, and Personal Deodorant (Int. Cls. 3 and 5).
First use Sept. 18, 1967.

SN 282,823. Sales Affiliates, Inc., New York, N.Y. Filed Oct. 18, 1967.

MODERN FORM

For Lotions Used in Permanent Waving and Setting of Hair (Int. Cl. 3).
First use Oct. 11, 1967.

SN 284,587. Bristol-Myers Company, New York, N.Y. Filed Nov. 13, 1967.

YOU NEVER LOOKED BETTER IN YOUR LIFE

For Cleansing Cream (Int. Cl. 3).
First use Oct. 4, 1967.

Class 52 — Detergents and Soaps

SN 275,298. Plough, Inc., Memphis, Tenn. Filed July 3, 1967.

COPPERTONE

Owner of Reg. Nos. 601,438 and 806,935.
For Luxury Lotion Toilet Soap (Int. Cl. 3).
First use Jan. 24, 1967.

SN 275,299. Plough, Inc., Memphis, Tenn. Filed July 3, 1967.

ROYAL BLEND

The word "Blend" is disclaimed apart from the mark as shown. Owner of Reg. No. 767,705.
For Luxury Lotion Toilet Soap (Int. Cl. 3).
First use Jan. 24, 1967.

SN 279,100. Nettie Rosenstein, Inc., d.b.a. Nettie Rosenstein, New York, N.Y. Filed Aug. 25, 1967.

FLEURS D'ELLE

The English translation of the mark "Fleurs d'Elle" is "flowers of her" or "her flowers." Owner of Reg. No. 745,224.
For Toilet Soap (Int. Cl. 3).
First use October 1962.

SN 281,051. Fabriek van Cosmetische Produkten Andrelon Cosmetics N.V., Bodegraven, Netherlands. Filed Sept. 25, 1967.

DOUCHE FRIS ANDRÉLON

The Dutch words "Douche Fris" translated into English mean "shower fresh." Owner of Dutch Reg. No. 147,920, dated Apr. 16, 1963.
For Toilet Soaps (Int. Cl. 3).

SN 281,727. Sybil Ives Incorporated, Yonkers, N.Y. Filed Oct. 3, 1967.

1,000,000

For Hair Shampoo (Int. Cl. 3).
First use July 17, 1967.

SN 282,008. Sargeant Products Corporation, d.b.a. Sargeant Products, Highland Mills, N.Y. Filed Oct. 6, 1967.

The word "Spot" is disclaimed.
For Chemical Preparation for Use as a Spot and Stain Eradicator (Int. Cl. 3).
First use Apr. 15, 1945.

SN 283,106. J. P. Corrigan, d.b.a. Shyanne Co., Reno, Nev. Filed Oct. 23, 1967.

ShyANNE

For Glass Cleaner (Int. Cl. 3).
First use Oct. 17, 1967.

SN 285,201. Beryl Collens, New York, N.Y. Filed Nov. 20, 1967.

SOUTH AUDLEY

For Bar Toilet Soap (Int. Cl. 3).
First use Nov. 1, 1966.

SN 286,767. Metalcraft, Inc., West Palm Beach, Fla. Filed Dec. 12, 1967.

DEOXIDENT

For De-Oxidizing and Cleaning Composition for Metals, Ceramics, Tile, Terrazzo, and Marble (Int. Cl. 3).
First use on or about Sept. 10, 1967.

SN 286,912. The Diversey Corporation, Chicago, Ill. Filed Dec. 14, 1967.

DEEEP

Owner of Reg. No. 619,284.
For Concrete Floor Cleaner (Int. Cl. 3).
First use Sept. 21, 1967.

SN 286,915. The Diversey Corporation, Chicago, Ill. Filed Dec. 14, 1967.

STEAM BRITE

For Steam Cleaning Compound (Int. Cl. 1).
First use Sept. 21, 1967.

SN 286,917. The Drackett Company, Cincinnati, Ohio. Filed Dec. 14, 1967.

PLUNGE

For Drain Cleaner (Int. Cl. 3).
First use Oct. 26, 1967.

SN 288,117. Rutley Industries, Inc., Newark, N.J. Filed Jan. 4, 1968.

SOLUENE

For Safety Solvent for Cleaning Metals, Motors, and Parts (Int. Cl. 1).
First use Nov. 2, 1967.

SN 288,174. Armour and Company, Chicago, Ill. Filed Jan. 5, 1968.

EXTRA

For Bath and Toilet Soap (Int. Cl. 3).
First use on or prior to Nov. 17, 1967.

SERVICE MARKS

Class 100 — Miscellaneous

SN 236,824. Intercontinental Life Insurance Company, East Orange, N.J. Filed Jan. 19, 1966.

"MR. PENSION"

For Consulting and Setting Up of Insurance Programs and Cases (Int. Cl. 42).
First use Nov. 15, 1965.

SN 251,002. St. Louis Teachers Association, St. Louis, Mo. Filed July 25, 1966.

For Services for Promoting the Welfare of Teachers; Securing Adequate Laws for the Care and Protection of Teachers (Int. Cl. 42).
First use Sept. 8, 1964.

SN 264,579. Paramed Incorporated, New York, N.Y. Filed Feb. 13, 1967.

The mark comprises a fanciful representation of the letter "P."
For Consultation and Designing Services, Rendered to Hospitals, Architects Specializing in Hospitals, to Colleges and Pharmaceutical Manufacturers in Connection With Floor-Plan Layout, Construction, Modernization, Packaging, Inventory Control, Purchasing and Personnel Training (Int. Cl. 42).
First use Sept. 12, 1963.

SN 270,937. Mr. Steak, Inc., Denver, Colo. Filed May 8, 1967.

MR. STEAK

Applicant disclaims the word "Steak" apart from the mark as shown. Owner of Reg. No. 827,025.
For Restaurant Services (Int. Cl. 42).
First use in or about March 1962.

SN 270,938. Mr. Steak, Inc., Denver, Colo. Filed May 8, 1967.

MR Steak

Applicant disclaims the word "Steak" apart from the mark as shown. Owner of Reg. No. 827,025.
For Restaurant Services (Int. Cl. 42).
First use in or about March 1962.

SN 271,165. Midwest Breeders Cooperative, Shawano, Wis. Filed May 10, 1967.

MB

The mark comprises a fanciful representation of the head of a bull and the letters "MB."
For Animal Breeding Service (Int. Cl. 42).
First use Jan. 1, 1967.

SN 276,898. Virginia Sky-Line Company, Inc., Richmond, Va. Filed July 26, 1967.

Skyline

Owner of Reg. No. 723,690.
For Hotel, Motel, and Restaurant Services (Int. Cl. 42).
First use June 1967; February 1939 as to "Skyline."

SN 281,050. Exploration Surveys, Inc., Dallas, Tex. Filed Sept. 25, 1967.

SEAGRAVITY

For Gravimetric Geophysical Exploration in, on, or Under the Surface of All Bodies of Water (Int. Cl. 42).
First use June 29, 1963.

Class 101 — Advertising and Business

SN 264,892. Advico, Inc., Yakima, Wash. Filed Feb. 17, 1967.

FUNNY FARM

The drawing is lined for red.
For Promotion of the Sale of Goods and Services of Others by Providing Sales Incentive Plans and Advertising Programs, Copy and Layout Service (Int. Cl. 35).
First use Nov. 14, 1966.

SN 264,961. Ralph Pitner, d.b.a. Folderack Distribution Service, Honolulu, Hawaii. Filed Feb. 17, 1967.

FOLDERACK

For Distribution of Advertising Brochures for Others (Int. Cl. 35).
First use on or about Mar. 21, 1966.

SN 271,091. Xicom Incorporated, Tuxedo, N.Y. Filed May 9, 1967.

CONSEL
XICOM CONFRONTATION SEARCH LABORATORY

For Preparation of Program Materials for Educational and Communication Purposes, to the Specification of Others (Int. Cl. 35).
First use Apr. 17, 1967.

SN 274,057. Theodore D. Galas, d.b.a. Taxpert Income Tax Services, Tinley Park, Ill. Filed June 16, 1967.

TAXPERT

For Accounting Services (Int. Cl. 35).
First use May 25, 1967.

SN 281,571. Gene Gartman, Orangeburg, S.C. Filed Oct. 2, 1967.

CAW CAW
VARIETY

The word "Variety" is disclaimed apart from the mark as shown.
For Retail Variety Store Services (Int. Cl. 35).
First use Feb. 2, 1967.

SN 282,562. Fanning Personnel Agency, Inc., New York, N.Y. Filed Oct. 16, 1967.

DIAL-A-JOB

For Employment Agency Services (Int. Cl. 35).
First use on or about June 1, 1967.

SN 290,422. The Villager, Inc., Philadelphia, Pa. Filed Feb. 6, 1968.

LADYBUG

Owner of Reg. Nos. 542,327, 717,224, and 842,483.
For Retail Apparel Stores Services (Int. Cl. 35).
First use Nov. 6, 1958.

SN 297,627. Associated Grocers' Company of St. Louis, Missouri, St. Louis, Mo. Filed May 8, 1968.

SPEEDI
CHEK

Applicant disclaims the term "Food Shop" apart from the mark as shown.
For Supermarket and Grocery Store Services (Int. Cl. 35).
First use on or about Aug. 1, 1961.

Class 102 — Insurance and Financial

SN 250,757. Hawaii Estates Corporation Ltd., Vancouver, British Columbia, Canada. Filed July 21, 1966.

Priority claimed under Sec. 44(d) on Canadian application filed Apr. 18, 1966; Reg. No. 149,446, dated Feb. 17, 1967. The drawing is lined to show the colors green, yellow, and brown.
For Financing Real Estate (Int. Cl. 36).

SN 262,142. Eurocard Incorporated, New York, N.Y. Filed Jan. 9, 1967.

The mark comprises a fanciful representation of the letter "E."
For Extending Credit Card Services to Others (Int. Cl. 36).
First use November 1964.

SN 269,527. First Federal Savings and Loan Association of Evansville, Evansville, Ind. Filed Apr. 19, 1967.

The Federal where people come first

For Savings and Loan Services (Int. Cl. 36).
First use Mar. 27, 1967.

SN 279,039. American Republic Insurance Company, Des Moines, Iowa. Filed Aug. 25, 1967.

AMERICAN REPUBLIC

For Underwriting of Hospital, Surgical, Medical, Nursing, Life, Life Annuities, Group, Group Annuities (Fixed and Variable), and Disability Insurance (Int. Cl. 36).
First use spring of 1929.

Class 103 — Construction and Repair

SN 248,855. Southwest Irrigation Company, Tulsa, Okla. Filed June 23, 1966.

SOUTHWEST

For Installation and Maintenance of Lawn Sprinkler Systems (Int. Cl. 37).
First use in or about February 1959.

SN 263,521. Aquatherm Conditioning Corp., Long Island City, N.Y. Filed Jan. 30, 1967.

AQUATHERM

For Installation and Maintenance of Air Conditioning Equipment (Int. Cl. 37).
First use at least as early as April 1960.

SN 271,230. D-A Lubricant Company, Inc., Indianapolis, Ind. Filed May 11, 1967.

CLS

For Determining and Recommending to Others Oil Change Periods and Maintenance Practices for Internal Combustion Engines of All Types (Int. Cl. 37).
First use May 5, 1966.

SN 277,043. Hagopian & Sons, Detroit, Mich. Filed July 28, 1967.

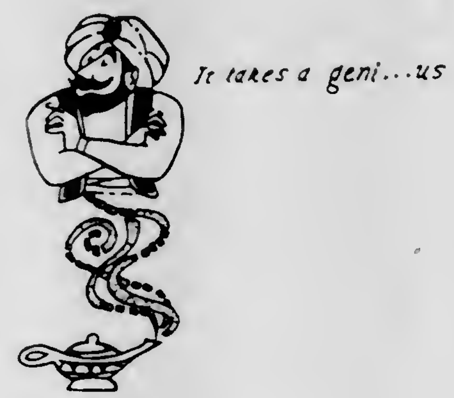

For Carpet Cleaning and Repair Service (Int. Cl. 37).
First use about Apr. 30, 1964.

SN 278,561. AMF Tuboscope, Inc., Houston, Tex. Filed Aug. 18, 1967.

TUBOSCAN

Owner of Reg. Nos. 435,537 and 526,411.
For Inspection of Tubular Members To Detect Defects Therein (Int. Cl. 37).
First use at least as early as May 1, 1967.

Class 106 — Material Treatment

SN 279,798. Best Stamp & Manufacturing Company, d.b.a. Best Manufacturing Co., Kansas City, Mo. Filed Sept. 7, 1967.

GRAPHIC-BLAST

For Engraving Services (Int. Cl. 40).
First use Dec. 9, 1966.

Class 107 — Education and Entertainment

SN 256,652. Kenneth Michael Daley, d.b.a. Skip Daley, St. Louis, Mo. Filed Oct. 18, 1966.

The AARDVARKS

For Entertainment Services—Namely, Musical Renditions of a Combo (Int. Cl. 41).
First use Aug. 12, 1966.

SN 268,474. Eugene Roger Castenholz, d.b.a. Roger Alexander Niven, Grosse Pointe, Mich. Filed Apr. 6, 1967.

ALEXANDER'S RAGTIME BAND

Applicant disclaims any exclusive rights to the wording "Ragtime Band" apart from the mark as shown.
For Musical Entertainment Services Performed by an Orchestra (Int. Cl. 41).
First use July 1, 1966.

SN 272,774. R.B. Enterprises, Inc., Westbury, N.Y. Filed May 25, 1967.

DidactiGame

No claim of exclusive right is made to "Game," for the service recited.
For Educational Services—Namely, Devising Games, Programs and Other Instructional Materials and Apparatus, and Holding Seminars Designed To Instruct Various Personnel in All Industries, Trades and Walks of Life in the Handling of Business and Inter-Personal Problems (Int. Cl. 41).
First use May 20, 1966.

SN 275,754. Anthony M. Galgano, North Bellmore, N.Y. Filed July 11, 1967.

BULLY WOOLY

For Advertising and Staging Dances (Int. Cl. 41).
First use July 7, 1965.

SN 283,313. Warner Bros.-Seven Arts, Inc., New York, N.Y. Filed Oct. 25, 1967.

The mark comprises a fanciful representation of the letter "W" and the numeral "7."
For Entertainment Services—Namely, Exhibition of Motion Pictures and Rental of Motion Picture Films (Int. Cl. 41).
First use on or about July 18, 1967.

SN 286,730. Sterling Forest Management Corporation, Tuxedo, N.Y. Filed Dec. 11, 1967.

For Providing Cultural, Educational, and Recreational Facilities to a Community and to the Public (Int. Cl. 41).
First use April 1960.

SN 288,265. Warner Bros.-Seven Arts, Inc., New York, N.Y. Filed Jan. 8, 1968.

The mark comprises a fanciful representtion of the letter "W" and the number "7."
For Entertainment Services—Namely, Providing Entertainment Through the Medium of Motion Pictures (Int. Cl. 41).
First use on or about Nov. 15, 1967.

COLLECTIVE MEMBERSHIP MARKS

Class 200

SN 275,991. Agricultural Nitrogen Institute, Memphis, Tenn. Filed July 14, 1967.

AGRICULTURAL NITROGEN INSTITUTE ANI

For Indicating Membership in Applicant.
First use prior to June 1, 1967.

SN 278,898. The National Employment Association, Washington, D.C. Filed Aug. 23, 1967.

Registered Employment Counselor, R.E.C.

For Indicating Membership in Applicant Association.
First use 1960.

TRADEMARK REGISTRATIONS ISSUED

PRINCIPAL REGISTER

Class 1 — Raw or Partly Prepared Materials

854,925. E.P.I. Engineered Plastics Incorporated. MULTIPLE CLASS (Classes 1, 23, and 38). SN 217,234. Pub. 6-4-68. Filed 4-26-65.

854,926. EPI AND DESIGN. Engineered Plastics Incorporated. MULTIPLE CLASS (Classes 1, 23, and 38). SN 217,235. Pub. 6-4-68. Filed 4-26-65.

854,927. UTE. The Flintkote Company. SN 262,259. Pub. 6-4-68. Filed 1-10-67.

854,928. GRO-N-GRAZE. George Warner Seed Company, Inc. SN 263,716. Pub. 6-4-68. Filed 1-31-67.

854,929. GAR-DUR. Garland Manufacturing Company. SN 270,373. Pub. 6-4-68. Filed 5-1-67.

854,930. OLD GLORY. Peabody Coal Company. SN 275,166. Pub. 6-4-68. Filed 6-30-67.

854,931. CHIEFTAIN. Peabody Coal Company. SN 275,167. Pub. 6-4-68. Filed 6-30-67.

854,932. AIRLINE. Peabody Coal Company. SN 275,168. Pub. 6-4-68. Filed 6-30-67.

854,933. SYCAMORE. Peabody Coal Company. SN 275,169. Pub. 6-4-68. Filed 6-30-67.

854,934. GILMOLD. The Gilman Brothers Company. SN 275,255. Pub. 6-4-68. Filed 7-3-67.

854,935. KOBI. Kobi Polyethylene Bag Mfg. Co. Inc. MULTIPLE CLASS (Classes 1, 2, and 37). SN 287,785. Pub. 6-4-68. Filed 12-29-67.

854,936. BARRETT'S. Barrett & Company, Inc. SN 290,443. Pub. 6-4-68. Filed 2-7-68.

Class 2 — Receptacles

854,935. (See Class 1 for this trademark.)

854,937. SANIMASTER. Rheem Manufacturing Company. SN 258,325. Pub. 6-4-68. Filed 11-9-66.

854,938. WORLD MAP (DESIGN). Taylor & Gaskin, Inc. MULTIPLE CLASS (Classes 2 and 23). SN 260,479. Pub. 6-4-68. Filed 12-9-66.

854,939. MISCELLANEOUS DESIGN. Gold Medal Products Co. MULTIPLE CLASS (Classes 2, 21, 23, 26, 32, 34, 45, 46, and 52). SN 265,585. Pub. 6-4-68. Filed 2-28-67.

854,940. DATADOSE. Sparks Corporation. SN 280,475. Pub. 6-4-68. Filed 9-15-67.

854,941. PLASS-PAK. Plastics, Inc. SN 283,455. Pub. 6-4-68. Filed 10-26-67.

854,942. MENU MASTER. American Can Company. SN 284,565. Pub. 6-4-68. Filed 11-13-67.

854,943. POTIE POSIE AND DESIGN. Elmer H. Davis, d.b.a. Tri-Pee Co. SN 284,998. Pub. 6-4-68. Filed 11-16-67.

Class 3 — Baggage, Animal Equipments, Portfolios, and Pocketbooks

854,944. MINART. Adolph Lerman, d.b.a. Minart Company. MULTIPLE CLASS (Classes 3 and 39). SN 268,203. Pub. 6-4-68. Filed 4-3-67.

854,945. LIFE STRIDE. Brown Shoe Company, Inc. SN 275,031. Pub. 6-4-68. Filed 6-29-67.

Class 5 — Adhesives

854,946. TRANSAM. J. P. Stevens & Co., Inc. MULTIPLE CLASS (Classes 5 and 6). SN 240,049. Pub. 6-4-68. Filed 3-3-66.

854,947. BETTER ADHESIVES THROUGH RESEARCH. American Adhesives Inc. SN 282,509. Pub. 6-4-68. Filed 10-16-67.

Class 6 — Chemicals and Chemical Compositions

854,946. (See Class 5 for this trademark.)

854,948. JETCO AND DESIGN. James E. Thomas, Jr., d.b.a. J. E. Thomas Co. MULTIPLE CLASS (Classes 6, 12, and 16). SN 234,484. Pub. 6-4-68. Filed 12-13-65.

854,949. MIMI AND DESIGN. M.J. Co. Inc. SN 249,170. Pub. 6-4-68. Filed 6-28-66.

854,950. TEMPRASURE. Ken Steenolsen. SN 264,985. Pub. 6-4-68. Filed 2-17-67.

854,951. THE GROWING WORLD OF VELSICOL. Velsicol Chemical Corporation (Delaware corporation), by merger and change of name from Velsicol Chemical Corporation (Illinois corporation). SN 267,461. Pub. 6-4-68. Filed 3-23-67.

854,952. FRANCOLANE. Ugine Kuhlmann. SN 267,869. Pub. 6-4-68. Filed 3-29-67.

854,953. ATPLUS. Atlas Chemical Industries, Inc. SN 268,013. Pub. 6-4-68. Filed 3-31-67.

854,954. LUSTRETONE. Koppers Company, Inc. SN 268,883. Pub. 6-4-68. Filed 4-11-67.

854,955. MAXIRON. The Maximent Corporation. SN 272,388. Pub. 6-4-68. Filed 5-25-67.

854,956. ICE A-GO-GO. American Fuel & Supply Co., Inc., d.b.a. American Fuel and Supply Co. SN 277,006. Pub. 6-4-68. Filed 7-28-67.

854,957. TRICHELOCK. Calgon Corporation (Delaware corporation), assignee of Calgon Corporation (Pennsylvania corporation). SN 278,344. Pub. 6-4-68. Filed 7-25-67.

854,958. COMSOL. Commercial Solvents Corporation. SN 278,376. Pub. 6-4-68. Filed 8-16-67.

854,959. ANSCOCHROME. General Aniline & Film Corporation. SN 279,181. Pub. 6-4-68. Filed 8-28-67.

854,960. TECTO. Merck & Co., Inc. SN 279,404. Pub. 6-4-68. Filed 8-30-67.

854,961. LOVING. Texize Chemicals, Inc. SN 279,966. Pub. 6-4-68. Filed 9-8-67.

854,962. ULTRACIDE. Geigy Chemical Corporation. SN 280,044. Pub. 6-4-68. Filed 9-11-67.

854,963. BRITONE. The Sherwin-Williams Company. SN 280,100. Pub. 6-4-68. Filed 9-11-67.

854,964. CY-ELEC. American Cyanamid Company. SN 280,140. Pub. 6-4-68. Filed 9-12-67.

854,965. HIDDEN GLOW. J. Hershkowitz, Inc., d.b.a. P.M.C. SN 290,050. Pub. 6-4-68. Filed 2-1-68.

854,966. GLOBINCAL. Chas. Pfizer & Co., Inc. SN 292,241. Pub. 6-4-68. Filed 3-1-68.

854,967. TRAILWAY. Diamond Shamrock Corporation. SN 292,843. Pub. 6-4-68. Filed 3-11-68.

854,968. SINGLESHOT. Diamond Shamrock Corporation. SN 292,845. Pub. 6-4-68. Filed 3-11-68.

Class 7 — Cordage

854,969. HEAD-TYS. East House Enterprises, Inc. SN 288,010. Pub. 6-4-68. Filed 1-3-68.

Class 8 — Smokers' Articles, Not Including Tobacco Products

854,970. LAVERNE. Laverne International, Ltd. MULTIPLE CLASS (Classes 8, 20, 37, 50, and 100). SN 216,237. Pub. 6-4-68. Filed 4-12-65.

854,971. JOHN PEEL. B. Barling & Sons Limited. SN 251,787. Pub. 6-4-68. Filed 8-5-66.

854,972. 1414 CZECHOSLOVAKIA AND DESIGN. Borske Sklo Narodni Podnik. MULTIPLE CLASS (Classes 8 and 33). SN 275,359. Pub. 6-4-68. Filed 7-5-67.

Class 9 — Explosives, Firearms, Equipments, and Projectiles

854,973. MERCURY. Washington Fireworks Co., Inc. SN 273,141. Pub. 6-4-68. Filed 6-5-67.

854,974. SIL-TUNG. Firth Sterling Corporation, assignee of Firth Sterling Inc. MULTIPLE CLASS (Classes 9, 21, and 23). SN 275,005. Pub. 6-4-68. Filed 6-29-67.

Class 10 — Fertilizers

854,975. TRE-HOLD. Amchem Products, Inc. SN 275,600. Pub. 6-4-68. Filed 7-10-67.

Class 12 — Construction Materials

854,948. (See Class 6 for this trademark.)

854,976. RIDGE HOMES. Ridge Pike Lumber Company, Inc. SN 193,901. Pub. 6-4-68. Filed 5-20-64.

854,977. RIDGE PIKE HOMES. Ridge Pike Lumber Company, Inc. SN 193,903. Pub. 6-4-68. Filed 5-20-64.

854,978. RIDGE HOMES AND DESIGN. Ridge Pike Lumber Company, Inc. SN 231,597. Pub. 6-4-68. Filed 10-24-65.

854,979. SOLARSHADE. Clearview Corp. SN 243,544. Pub. 6-4-68. Filed 4-15-66.

854,980. FIST. Lesjofors Aktiebolag. SN 265,642. Pub. 6-4-68. Filed 2-28-67.

854,981. VINYL SHIELD. Georgia-Pacific Corporation. SN 280,584. Pub. 6-4-68. Filed 9-18-67.

854,982. SLIC-TITE. Lake Chemical Co. SN 281,592. Pub. 6-4-68. Filed 10-2-67.

854,983. STEALSOUND. Munchhausen Soundproofing Company, Inc. SN 281,715. Pub. 6-4-68. Filed 10-5-67.

854,984. LACE-TEX. Chem Sales Corporation (Bahamas) Limited. SN 286,244. Pub. 6-4-68. Filed 12-5-67.

854,985. XOC. Concrete Masonry Corporation. SN 292,557. Pub. 6-4-68. Filed 3-6-68.

Class 13 — Hardware and Plumbing and Steam-Fitting Supplies

854,986. SMITH TESCOM AND DESIGN. Tescom Corporation. MULTIPLE CLASS (Classes 13, 21, 23, 26, and 34). SN 247,854. Pub. 6-4-68. Filed 6-13-66.

854,987. TESCOM. Tescom Corporation. MULTIPLE CLASS (Classes 13, 21, 23, 26, and 34). SN 247,989. Pub. 6-4-68. Filed 6-13-66.

854,988. PP. Price-Pfister Brass Mfg. Co. SN 256,969. Pub. 6-4-68. Filed 10-21-66.

854,989. GALVA-FLEX. Ric-Wil, Incorporated. SN 259,964. Pub. 6-4-68. Filed 12-2-66.

854,990. BLUE FLAME. Joe Leighton & Associates, Inc., d.b.a. Canterbury Enterprises. SN 264,838. Pub. 6-4-68. Filed 2-16-67.

854,991. A AND DESIGN. Airhardware, Inc. SN 273,013. Pub. 6-4-68. Filed 6-5-67.

Class 15 — Oils and Greases

854,992. CHAIN SLICK AND DESIGN. Robert L. Batchelor. SN 251,181. Pub. 6-4-68. Filed 7-28-66.

854,993. BOTL LUBE AND DESIGN. Robert L. Batchelor. SN 251,182. Pub. 6-4-68. Filed 7-28-66.

854,994. MISSILE LUBE. Hangsterfer's Laboratories, Inc. SN 278,100. Pub. 6-4-68. Filed 8-11-67.

854,995. MIC OIL. Ron Shields, Inc. SN 280,976. Pub. 6-4-68. Filed 9-22-67.

Class 16 — Protective and Decorative Coatings

854,948. (See Class 6 for this trademark.)

Class 17 — Tobacco Products

854,996. TURKISH TAFFY. Lane Limited. SN 262,179. Pub. 6-4-68. Filed 1-9-67.

854,997. BALLERINA. Lane Limited. SN 262,180. Pub. 6-4-68. Filed 1-9-67.

854,998. ENGLISH TOFFEE. Lane Limited. SN 262,181. Pub. 6-4-68. Filed 1-9-67.

854,999. MONTE VERDI. Lane Limited. SN 262,182. Pub. 6-4-68. Filed 1-9-67.

855,000. PUNCH AND DESIGN. F. Palicio & Co., Inc., d.b.a. F. Palicio, Inc. SN 292,496. Pub. 6-4-68. Filed 3-5-68.

Class 18 — Medicines and Pharmaceutical Preparations

855,001. STRUT. Arthur Koponen, d.b.a. Crichton Chemical Company. SN 259,941. Pub. 6-4-68. Filed S.R. 12-2-66; Am. P.R. 3-26-68.

855,002. WHITMER'S AND DESIGN. Marianna Denton, d.b.a. The Whitmer Company. SN 262,405. Pub. 6-4-68. Filed 1-12-67.

855,003. SORDENAC. American Home Products Corporation. SN 263,732. Pub. 6-4-68. Filed 2-1-67.

855,004. G-LIXIR. Palmedico, Inc. SN 266,070. Pub. 6-4-68. Filed 3-6-67.

855,005. G-3. Palmedico, Inc. SN 266,076. Pub. 6-4-68. Filed 3-6-67.

855,006. APIQUEL. McNeil Laboratories, Incorporated. SN 270,690. Pub. 6-4-68. Filed 5-4-67.

855,007. BOLMED. The S. E. Massengill Company. SN 272,099. Pub. 6-4-68. Filed 5-22-67.

855,008. MASTIBIOTIC. Schering Corporation. SN 272,218. Pub. 6-4-68. Filed 5-23-67.

855,009. LINCO-MED. The Upjohn Company. SN 274,472. Pub. 6-4-68. Filed 6-21-67.

855,010. GLUTAFORTIS. The Purdue Frederick Company. SN 274,891. Pub. 6-4-68. Filed 6-27-67.

855,011. CERVASPAN. USV Pharmaceutical Corporation. SN 275,183. Pub. 6-4-68. Filed 6-30-67.

855,012. PANCOXIN. Merck & Co., Inc. SN 275,282. Pub. 6-4-68. Filed 7-3-67.

855,013. MATCH. American Home Products Corporation. SN 275,718. Pub. 6-4-68. Filed 7-6-67.

Class 19 — Vehicles

855,014. SEA-LARK. Donald L. Wollard, d.b.a. Don's Marine Center. SN 252,363. Pub. 6-4-68. Filed 8-15-66.

855,015. WESTERLY. Westerly Marine Construction Limited. SN 272,528. Pub. 6-4-68. Filed 5-26-67.

855,016. MAT-TRUC. Nu-Way Manufacturing Company, Inc. SN 274,826. Pub. 4-9-68. Filed 6-26-67.

855,017. LOAD TOTEMS. Miracle Spring Lift Co. SN 275,546. Pub. 6-4-68. Filed 7-7-67.

855,018. TORK LIFT. James F. Mann, d.b.a. Tork Lift Sales and Manufacturing Company. SN 281,589. Pub. 6-4-68. Filed 10-2-67.

855,019. REGATTA. Marine Services Unlimited. SN 284,211. Pub. 6-4-68. Filed 11-6-67.

855,020. NEWELL COACH. Miami Products, Inc. SN 284,876. Pub. 6-4-68. Filed 11-15-67.

855,021. HI-BUOY. H. W. Andersen Products, Inc. SN 290,558. Pub. 6-4-68. Filed 2-8-68.

Class 20 — Linoleum and Oiled Cloth

854,970. (See Class 8 for this trademark.)

855,022. LUXURON. Technical Tape Corp. SN 250,549. Pub. 6-4-68. Filed 7-19-66.

Class 21 — Electrical Apparatus, Machines, and Supplies

854,939. (See Class 2 for this trademark.)

854,986. (See Class 13 for this trademark.)

854,987. (See Class 13 for this trademark.)

854,974. (See Class 9 for this trademark.)

855,023. PROTO PROFESSIONAL EQUIPMENT AND DESIGN. Pendleton Tool Industries, Inc. SN 196,475. Pub. 6-4-68. Filed 6-25-64.

855,024. JACKSON AND DESIGN. Air Reduction Company, Incorporated. MULTIPLE CLASS (Classes 21, 26, and 39). SN 240,490. Pub. 6-4-68. Filed 3-9-66.

855,025. LITTON NEO-MAGNETIC. Litton Precision Products, Inc. SN 241,789. Pub. 6-4-68. Filed 3-24-66.

855,026. DUSTAMATIC. Pickering & Company, Inc. SN 264,159. Pub. 6-4-68. Filed 2-7-67.

855,027. AL-RITE. The John-Wilmer Company, Inc. SN 266,424. Pub. 6-4-68. Filed 3-10-67.

855,028. TASCO. Tasco Sales, Inc. SN 279,011. Pub. 6-4-68. Filed 8-24-67.

855,029. SPIR-O-GUIDE. Prodelin, Inc. SN 279,216. Pub. 6-4-68. Filed 8-28-67.

855,030. BCA AND DESIGN. Battery Corporation of America. SN 279,613. Pub. 6-4-68. Filed 9-5-67.

855,031. MULTI-FORMS. Slivray-Litecraft Corporation. SN 280,101. Pub. 6-4-68. Filed 9-11-67.

855,032. NATIONAL AND DESIGN. Matsushita Electric Industrial Co., Ltd. MULTIPLE CLASS (Classes 21, 26, and 36). SN 289,148. Pub. 6-4-68. Filed 1-19-68.

855,033. SEALECTROSWITCH. Sealectro Corporation. SN 292,865. Pub. 6-4-68. Filed 3-11-68.

Class 22 — Games, Toys, and Sporting Goods

855,034. PETER KENNEDY. Peter Kennedy, Inc. SN 251,931. Pub. 6-4-68. Filed 8-8-66.

855,035. CRAZIPOKR. Frank J. Schick. SN 252,595. Pub. 6-4-68. Filed 8-17-66.

855,036. EVERLAST. Everlast World's Boxing Headquarters Corporation. SN 263,367. Pub. 6-4-68. Filed 1-26-67.

855,037. STAND-RITE. George R. Vibbert, d.b.a. Stand-Rite Co. SN 265,248. Pub. 6-4-68. Filed 2-23-67.

855,038. JANZ DOLLS HOUSE OF IDEAS AND DESIGN. Janet L. Hall, d.b.a. House of Ideas. SN 266,035. Pub. 6-4-68. Filed 3-6-67.

855,039. TELE-GOAL AND DESIGN. Triman Tele-Goal Ltd. SN 267,362. Pub. 6-4-68. Filed 3-22-67.

855,040. DAVE DAVIS. M. Edward Pope, d.b.a. Eddie Pope & Company. SN 274,088. Pub. 6-4-68. Filed 6-16-67.

855,041. 4 CYTE AND DESIGN. Milton Bradley Company. SN 276,637. Pub. 6-4-68. Filed 7-24-67.

855,042. TRIPLE CROWN. Atlantic Products Corporation (Delaware corporation), assignee of Atlantic Products Corporation (New Jersey corporation). SN 282,258. Pub. 6-4-68. Filed 10-11-67.

855,043. OP-YOP. Robert A. Kramer, d.b.a. Kramer Designs. SN 285,615. Pub. 6-4-68. Filed 11-24-67.

Class 23 — Cutlery, Machinery, and Tools, and Parts Thereof

854,925. (See Class 1 for this trademark.)

854,926. (See Class 1 for this trademark.)

854,938. (See Class 2 for this trademark.)

854,939. (See Class 2 for this trademark.)

854,974. (See Class 9 for this trademark.)

854,986. (See Class 13 for this trademark.)

854,987. (See Class 13 for this trademark.)

855,044. MISCELLANEOUS DESIGN. Rocket Research Corporation. SN 223,727. Pub. 9-27-66. Filed 7-19-65.

855,045. NO-SHOCK. Ingersoll-Rand Company. SN 245,929. Pub. 6-4-68. Filed 5-18-66.

855,046. ULTRAMILL. Peter V. N. Heller. SN 248,471. Pub. 6-4-68. Filed 6-20-66.

855,047. SOLO. Solo Kleinmotoren G.m.b.H. SN 263,122. Pub. 6-4-68. Filed 1-23-67.

855,048. MCKAY. The McKay Machine Company, assignee, by mesne assignment, of The McKay Machine Company. SN 266,771. Pub. 6-4-68. Filed 3-15-67.

855,049. CINCINNATI. The Cincinnati Shaper Company. SN 269,293. Pub. 6-4-68. Filed 4-17-67.

855,050. SUNDSTRAND. Sundstrand Corporation. SN 276,366. Pub. 6-4-68. Filed 7-19-67.

855,051. TEL-LASHER. Telsta Corporation. SN 276,715. Pub. 6-4-68. Filed 7-24-67.

855,052. QUICK TACK. U.S. Industries, Inc., assignee of Big Dutchman, Inc. SN 276,917. Pub. 6-4-68. Filed 7-27-67.

855,053. OVAL AND ARROW DESIGN (COLOR). Midas, Inc. SN 278,024. Pub. 6-4-68. Filed 8-10-67.

855,054. OVAL AND ARROW DESIGN. Midas, Inc. SN 278,025. Pub. 6-4-68. Filed 8-10-67.

Class 25 — Locks and Safes

855,055. DRESS UP YOUR HOME! National Lock Co. SN 263,104. Pub. 6-4-68. Filed 1-23-67.

Class 26 — Measuring and Scientific Appliances

854,939. (See Class 2 for this trademark.)

854,986. (See Class 13 for this trademark.)

854,987. (See Class 13 for this trademark.)

855,024. (See Class 21 for this trademark.)

855,032. (See Class 21 for this trademark.)

855,056. 311 SCM Corporation. SN 245,243. Pub. 6-4-68. Filed 5-9-66.

855,057. PHOTOSOL. Photosol Corporation. SN 253,552. Pub. 6-4-68. Filed 8-31-66.

855,058. E AND DESIGN. Dieterich Standard Corp. SN 259,095. Pub. 6-4-68. Filed 11-21-66.

855,059. FIRE-CYCLE. The Viking Corporation. SN 259,867. Pub. 6-4-68. Filed 12-1-66.

855,060. LOGICO. Industrial Inventions, Incorporated. SN 263,576. Pub. 6-4-68. Filed 1-30-67.

855,061. ASHTON. The Ashton Valve Company. SN 264,382. Pub. 6-4-68. Filed 2-10-67.

855,062. DELTA LOG AND DESIGN. Macbeth Corporation. SN 264,945. Pub. 6-4-68. Filed 2-17-67.

855,063. CARRERA. Wilhelm Anger O.H.G. SN 270,176. Pub. 4-9-68. Filed 4-27-67.

855,064. DEBER. Aktiebolaget Deber-Kontrol. SN 270,466. Pub. 6-4-68. Filed 5-2-67.

855,065. CLINI-CALL. Sanders Associates, Inc. SN 272,955. Pub. 6-4-68. Filed 6-2-67.

855,066. TALYLIN. The Rank Organisation Limited. SN 275,785. Pub. 6-4-68. Filed 7-11-67.

855,067. LITE-GARD. Picker X-Ray Corporation. SN 276,579. Pub. 6-4-68. Filed 7-21-67.

855,068. VIP-LITE. The House of Vision, Inc. SN 279,296. Pub. 6-4-68. Filed 8-29-67.

855,069. PICOMM MARK II. Potter Instrument Company, Inc. SN 281,620. Pub. 6-4-68. Filed 10-2-67.

855,070. DEVICHROME. Motorola, Inc. SN 281,713. Pub. 6-4-68. Filed 10-3-67.

855,071. STEREODAPTER. The Richards Corporation. SN 282,396. Pub. 6-4-68. Filed 10-12-67.

855,072. DEMAND-VARIABLE. Rolock Incorporated. SN 287,787. Pub. 6-4-68. Filed 12-29-67.

Class 28 — Jewelry and Precious-Metal Ware

855,073. BOMAE. Bomaé. SN 259,712. Pub. 6-4-68. Filed 11-30-66.

855,074. DIAMOND-MASTER. Gold-Master Corp. SN 264,539. Pub. 6-4-68. Filed 2-13-67.

855,075. MISCELLANEOUS DESIGN. Bart W. Mann. SN 280,615. Pub. 6-4-68. Filed 9-18-67.

855,076. DESIGN OF CASTLE. House of Berland, Inc. SN 281,420. Pub. 2-20-68. Filed 9-29-67.

855,077. CHAINSATION. Freeman Industrial Enterprises Corporation. SN 282,567. Pub. 6-4-68. Filed 10-16-67.

855,078. COAT OF ARMS (DESIGN). The Earl of Hardwicke, Limited. SN 283,194. Pub. 6-4-68. Filed 10-24-67.

855,079. THE EARL OF HARDWICKE. The Earl of Hardwicke, Limited. SN 283,196. Pub. 6-4-68. Filed 10-24-67.

855,080. ROYSTON ARMS. The Earl of Hardwicke, Limited. SN 283,198. Pub. 6-4-68. Filed 10-24-67.

855,081. MISCELLANEOUS DESIGN. The Earl of Hardwicke, Limited. SN 283,200. Pub. 6-4-68. Filed 10-24-67.

Class 29 — Brooms, Brushes, and Dusters

855,082. LOMA. Vistron Corporation. SN 281,333. Pub. 6-4-68. Filed 9-27-67.

Class 31 — Filters and Refrigerators

855,083. PUREX. Purex Corporation, Ltd., assignee of Cambridge Filter Corporation. SN 216,657. Pub. 4-19-66. Filed 4-16-65.

855,084. MULTI-KUBE. Clifford F. Mitchell. SN 259,753. Pub. 6-4-68. Filed 11-30-66.

855,085. U.S. AUTOMATIC SALES, INC. AND DESIGN. U.S. Automatic Sales, Inc. SN 276,591. Pub. 6-4-68. Filed 7-21-67.

Class 32 — Furniture and Upholstery

854,939. (See Class 2 for this trademark.)

Class 33 — Glassware

854,972. (See Class 8 for this trademark.)

Class 34 — Heating, Lighting, and Ventilating Apparatus

854,939. (See Class 2 for this trademark.)

854,986. (See Class 13 for this trademark.)

854,987. (See Class 13 for this trademark.)

855,086. AIR PRODUCTS AND DESIGN. Air Products and Chemicals, Inc. SN 246,833. Pub. 6-4-68. Filed 5-31-66.

855,087. ATOMASTER AND DESIGN. Koehring Company, assignee of Master Consolidated Inc. SN 248,241. Pub. 6-4-68. Filed 6-16-66.

855,088. HELIFOIL. Middle State Manufacturing Co., Inc. SN 248,628. Pub. 6-4-68. Filed 6-21-66.

855,089. RACER. The Babcock & Wilcox Company. SN 267,795. Pub. 6-4-68. Filed 3-29-67.

855,090. WHISPER JET. The Coleman Company, Inc. SN 268,579. Pub. 4-2-68. Filed 4-7-67.

855,091. KOOLTIP. Eutectic Welding Alloys Corporation. SN 273,950. Pub. 6-4-68. Filed 6-15-67.

855,092. MONARCH. Malleable Iron Range Company. SN 277,680. Pub. 6-4-68. Filed 8-7-67.

Class 35 — Belting, Hose, Machinery Packing, and Nonmetallic Tires

855,093. BITS-'N-PIECES AND DESIGN. Robert S. Hanser, d.b.a. Hanser Products Co. SN 257,386. Pub. 6-4-68. Filed 10-27-66.

855,094. GOLD-STRIPE. H. K. Porter Company, Inc. SN 261,101. Pub. 6-4-68. Filed 12-19-66.

855,095. HELISEAL. Borg-Warner Corporation (Delaware corporation), assignee of Borg-Warner Corporation (Illinois corporation). SN 265,784. Pub. 2-13-68. Filed 3-2-67.

855,096. SOUPLEX. Habasit, Ltd. SN 276,836. Pub. 6-4-68. Filed 7-26-67.

855,097. POLYCORD. Habasit, Ltd. SN 276,838. Pub. 6-4-68. Filed 7-26-67.

855,098. WOLVERINE GASKETS AND DESIGN. Wolverine Fabricating & Mfg. Co., Inc. SN 279,699. Pub. 6-4-68. Filed 9-5-67.

855,099. TITAN. The B. F. Goodrich Company. SN 280,047. Pub. 6-4-68. Filed 9-11-67.

855,100. GTW AND DESIGN. The General Tire & Rubber Company. SN 281,786. Pub. 6-4-68. Filed 10-4-67.

855,101. VYTA-GLASS. The Goodyear Tire & Rubber Company. SN 283,001. Pub. 6-4-68. Filed 10-20-67.

Class 36 — Musical Instruments and Supplies

855,032. (See Class 21 for this trademark.)

855,102. SAVAREZ. Babolat, Maillot, Witt. SN 264,644. Pub. 6-4-68. Filed 2-14-67.

855,103. GUARANI. Bernardo Herger. SN 266,884. Pub. 6-4-68. Filed 3-16-67.

855,104. CALL-CONTROL. World-Wide Enterprises Limited, assignee of Martin Electronics Manufacturing Corp. SN 267,761. Pub. 6-4-68. Filed 3-28-67.

855,105. RAJAH ZEETAR AND DESIGN. Rajah Zeetar Corp. SN 268,763. Pub. 6-4-68. Filed 4-10-67.

855,106. RICO-VOX. Bernardo Herger. SN 269,310. Pub. 6-4-68. Filed 4-17-67.

855,107. SCENIC SOUND. Joseph J. Meadow, Jr., d.b.a. Scenic Sound. SN 270,145. Pub. 6-4-68. Filed 4-27-67.

855,108. VIVITONE. Ponder & Best, Inc. SN 270,809. Pub. 6-4-68. Filed 5-5-67.

855,109. WAVERLEY. The Gramophone Company Limited. SN 272,720. Pub. 6-4-68. Filed 5-31-67.

855,110. ARTIST LTD. Rhythm Band, Inc. SN 273,310. Pub. 6-4-68. Filed 6-7-67.

855,111. 'HIPSTER'. Playtape, Inc. SN 273,901. Pub. 6-4-68. Filed 6-14-67.

855,112. BELL AND DESIGN. Bell Records, Inc. SN 275,219. Pub. 6-4-68. Filed 7-3-67.

855,113. MALA. Bell Records, Inc. SN 275,220. Pub. 6-4-68. Filed 7-3-67.

855,114. AMAZON ACE. Camp Associates. SN 276,639. Pub. 6-4-68. Filed 7-24-67.

855,115. ULTIMA. Ehrenreich Photo-Optical Industries, Inc. SN 276,930. Pub. 6-4-68. Filed 7-27-67.

855,116. SHOUT. Shout Records, Inc. SN 278,903. Pub. 6-4-68. Filed 8-23-67.

855,117. SUPER SLINKY. Ernie Ball, Inc. SN 285,696. Pub. 6-4-68. Filed 11-28-67.

855,118. CUSTOM GAUGE. Ernie Ball, Inc. SN 285,697. Pub. 6-4-68. Filed 11-28-67.

Class 37 — Paper and Stationery

854,935. (See Class 1 for this trademark.)

854,970. (See Class 8 for this trademark.)

855,119. STAR (DESIGN). Eberhard Faber Inc. MULTIPLE CLASS (Classes 37 and 52). SN 248,686. Pub. 6-4-68. Filed 6-22-66.

855,120. THORNWOOD. Eugene Potter Thornton. SN 269,472. Pub. 6-4-68. Filed 4-18-67.

855,121. WC AND DESIGN. Wescor Corporation. SN 275,970. Pub. 6-4-68. Filed 7-13-67.

Class 38 — Prints and Publications

854,925. (See Class 1 for this trademark.)

854,926. (See Class 1 for this trademark.)

855,122. CLOTHESMANSHIP. The Joseph & Feiss Company. SN 187,113. Pub. 6-4-68. Filed 2-20-64.

855,123. MICKELSON GALLERY AND DESIGN. Mickelson Incorporated, d.b.a. Mickelson Gallery. MULTIPLE CLASS (Classes 38, 50, and 101). SN 259,621. Pub. 6-4-68. Filed 11-29-66.

855,124. AMERICAN ARTIST. Billboard Publications, Inc., by change of name from The Billboard Publishing Company. SN 263,738. Pub. 6-4-68. Filed 2-1-67.

855,125. STENSO. Dennison Manufacturing Company. SN 271,136. Pub. 6-4-68. Filed 5-10-67.

855,126. P/M NEWSLETTER. Hoeganaes Corporation. SN 271,796. Pub. 6-4-68. Filed 5-18-67.

855,127. TUMBLEWEEDS. The Register and Tribune Syndicate, Inc. SN 274,212. Pub. 6-4-68. Filed 6-19-67.

855,128. SOFT-SELL SAM. The Register and Tribune Syndicate, Inc. SN 274,213. Pub. 6-4-68. Filed 6-19-67.

855,129. OPTICAL SPECTRA AND DESIGN. The Optical Publishing Co., Inc. SN 275,164. Pub. 6-4-68. Filed 6-30-67.

855,130. STAG. Magazine Management Company. SN 278,712. Pub. 6-4-68. Filed 8-21-67.

855,131. PM REPORT . . . . The Petroleum Engineer Publishing Company. SN 281,817. Pub. 6-4-68. Filed 10-4-67.

855,132. POSTGRADUATE MEDICINE. McGraw-Hill, Inc. SN 290,052. Pub. 6-4-68. Filed 2-1-68.

855,133. SUCCESS MOTIVATION. Success Motivation Institute, Inc. SN 292,329. Pub. 6-4-68. Filed 3-4-68.

855,134. WING DESIGN. Success Motivation Institute, Inc. SN 292,330. Pub. 6-4-68. Filed 3-4-68.

Class 39 — Clothing

854,944. (See Class 3 for this trademark.)

855,024. (See Class 21 for this trademark.)

855,135. BAREFOOT ORIGINALS AND DESIGN. Joseph Associates. SN 200,192. Pub. 6-14-66. Filed 8-19-64.

855,136. COUNTRY BOY. Blue Gem Manufacturing Company. SN 244,564. Pub. 1-17-67. Filed 4-29-66.

855,137. BIRDWELL ETC. AND DESIGN. Carrie E. Mann, d.b.a. Birdwell Clothes. SN 247,380. Pub. 6-4-68. Filed 3-14-66.

855,138. LIFE-SET. Pioneer Dress Corporation. SN 248,360. Pub. 6-4-68. Filed 6-17-66.

855,139. LA GAMINERIE. Societe Galaxie. MULTIPLE CLASS (Classes 39 and 51). SN 250,800. Pub. 6-4-68. Filed 7-22-66.

855,140. KNOCKAROUNDS. United States Rubber Company. SN 255,482. Pub. 6-4-68. Filed 9-29-66.

855,141. THE MISTIES. Formaid Co. SN 256,278. Pub. 6-4-68. Filed 10-12-66.

855,142. AMERICAN HOSPITAL SUPPLY A AND DESIGN. American Hospital Supply Corporation. SN 260,388. Pub. 6-4-68. Filed 12-9-66.

855,143. GREENAGER. Quality Dress Marketing AG, assignee of Interstyle AG. MULTIPLE CLASS (Classes 39 and 42). SN 260,997. Pub. 3-5-68. Filed 12-19-66.

855,144. GUIDELINE. Blue Star Shoes, Inc. SN 261,706. Pub. 6-4-68. Filed 12-30-66.

855,145. TEEN SCENE. J. P. Stevens & Co., Inc. SN 264,691. Pub. 6-4-68. Filed 2-14-67.

855,146. HENRY A LA PENSEE. Henry a la Pensee, Inc. SN 265,066. Pub. 6-4-68. Filed 2-20-67.

855,147. BRACER. The Kendall Company. SN 266,236. Pub. 6-4-68. Filed 3-8-67.

855,148. TRAK TRED. Endicott Johnson Corporation. SN 273,491. Pub. 6-4-68. Filed 6-9-67.

855,149. GOLDEN CROWN. W. S. Peebles & Co., Inc. SN 273,524. Pub. 6-4-68. Filed 6-9-67.

855,150. THE BROTHERS CHRISTIE. The Christie Brothers Fur Corp. SN 274,413. Pub. 6-4-68. Filed 6-21-67.

855,151. JUNE CARROLL AND DESIGN. Bayard Shirt Corp. SN 274,703. Pub. 6-4-68. Filed 6-26-67.

855,152. KNEELETS BY MARY GREY. Grey Hosiery Mills, d.b.a. Mary Grey Hosiery Mills. SN 275,848. Pub. 6-4-68. Filed 7-12-67.

855,153. ANNE FOGARTY. Anne Fogarty, Inc. SN 279,590. Pub. 6-4-68. Filed 9-5-67.

855,154. LOCAL 10. Unishops, Inc. SN 280,901. Pub. 6-4-68. Filed 9-21-67.

855,155. LOLLI-TOTS. Modern Globe, Inc. SN 283,142. Pub. 6-4-68. Filed 10-23-67.

855,156. BURLINGTON AND DESIGN. Burlington Industries, Inc. SN 283,978. Pub. 6-4-68. Filed 11-2-67.

855,157. UNDER-COVER. Maidenform, Inc. SN 288,745. Pub. 6-4-68. Filed 1-15-68.

Class 40 — Fancy Goods, Furnishings, and Notions

855,158. LADY ELLEN AND DESIGN. Reiner Industries, Inc. SN 205,825. Pub. 6-4-68. Filed 11-9-64.

Class 42 — Knitted, Netted, and Textile Fabrics, and Substitutes Therefor

855,143. (See Class 39 for this trademark.)

855,159. FAWNSKIN. J. P. Stevens & Co., Inc. SN 184,264. Pub. 7-28-64. Filed 1-8-64.

855,160. WOOL 6. Commercial Carpet Corporation. SN 269,173. Pub. 6-4-68. Filed 4-14-67.

855,161. ACRITONES. Stevcoknit Textile Co. SN 269,939. Pub. 6-4-68. Filed 4-24-67.

855,162. JUNGLAND. Gordax Corporation of America. SN 283,793. Pub. 6-4-68. Filed 10-31-67.

855,163. TOGA. Cannon Mills Company. SN 283,865. Pub. 6-4-68. Filed 11-1-67.

855,164. BURLINGTON AND DESIGN. Burlington Industries, Inc. SN 283,979. Pub. 6-4-68. Filed 11-2-67.

855,165. EVERPUFF. Shapiro & Son Bedspread Corp. SN 293,004. Pub. 6-4-68. Filed 3-12-68.

Class 43 — Thread and Yarn

855,166. BURLINGTON AND DESIGN. Burlington Industries, Inc. SN 283,977. Pub. 6-4-68. Filed 11-2-67.

Class 44 — Dental, Medical, and Surgical Appliances

855,167. IN THE SAME TRADITION ETC. AND DESIGN. American Hospital Supply Corporation, assignee of Convertors Incorporated. SN 236,468. Pub. 6-4-68. Filed 1-14-66.

855,168. AO AND DESIGN. American Optical Corporation. SN 287,613. Pub. 6-4-68. Filed 12-27-67.

Class 45 — Soft Drinks and Carbonated Waters

854,939. (See Class 2 for this trademark.)

855,169. PENGUIN. The Grand Union Company. SN 266,227. Pub. 6-4-68. Filed 3-8-67.

Class 46 — Foods and Ingredients of Foods

854,939. (See Class 2 for this trademark.)

855,170. MOCCOMAAT. Moccomaat N.V. SN 223,811. Pub. 6-4-68. Filed 7-20-65.

855,171. BENDICKS SUPERFINE CHOCOLATES. Bendicks (Mayfair) Limited. SN 250,130. Pub. 6-4-68. Filed 7-13-66.

855,172. CHIC N KRISP. Ralston Purina Company, assignee of Chic-n-Krisp, Inc. SN 250,932. Pub. 6-4-68. Filed 7-25-66.

855,173. HEART OF SPICE. Meat Industry Suppliers, Inc. SN 252,397. Pub. 6-4-68. Filed 8-15-66.

855,174. VIEON'S. Vieon's Donuts, Inc. SN 255,561. Pub. 6-4-68. Filed 9-30-66.

855,175. FROSTPUP AND DESIGN. General Industries Corporation. SN 260,148. Pub. 6-4-68. Filed 12-6-66.

855,176. MINUTE. General Foods Corporation. SN 262,260. Pub. 6-4-68. Filed 1-10-67.

855,177. FLAV-R-DIET. North Pacific Canners & Packers, Inc. SN 265,096. Pub. 6-4-68. Filed 2-20-67.

855,178. SOUTH PACIFIC AND DESIGN. Star-Kist Foods, Inc. SN 265,744. Pub. 6-4-68. Filed 3-1-67.

855,179. CAL-IDA. J. R. Simplot Company. SN 267,192. Pub. 6-4-68. Filed 3-20-67.

855,180. NEWLY WEDS AND DESIGN. Newly Weds Baking Co. SN 267,347. Pub. 6-4-68. Filed 3-22-67.

855,181. LOS PINOS NUEVOS. The New Pines, Inc., assignee of Antonio Fernandez, d.b.a. Los Pinos Nuevos. SN 267,413. Pub. 6-4-68. Filed 3-23-67.

855,182. CARNATION. Carnation Company. SN 269,057. Pub. 6-4-68. Filed 4-13-67.

855,183. CHELTEN HOUSE. Chelten House Products Inc. SN 269,172. Pub. 6-4-68. Filed 4-14-67.

855,184. SMART. The Dietene Company, d.b.a. The Delmark Company. SN 269,522. Pub. 6-4-68. Filed 4-19-67.

855,185. ROBERT'S COTTAGE AND DESIGN. John Parkyn Jeffcock. SN 270,788. Pub. 6-4-68. Filed 5-5-67.

855,186. LECHONCITO. Empacadora Del Caribe, Inc. SN 271,606. Pub. 6-4-68. Filed 5-16-67.

855,187. RIVER. Riviana Foods Inc. SN 272,406. Pub. 6-4-68. Filed 5-25-67.

855,188. FRENCH FRAUDS. The Pillsbury Company. SN 273,099. Pub. 6-4-68. Filed 6-5-67.

855,189. HEAD (DESIGN). Pennsylvania Dutch Co., Inc., d.b.a. Pennsylvania Dutch Company, Pennsylvania Dutch Foods, and Pennsylvania Dutch Candles. SN 273,525. Pub. 6-4-68. Filed 6-9-67.

855,190. FOUNTAIN BRAND. Fountain Industries, Inc. SN 275,650. Pub. 6-4-68. Filed 7-10-67.

855,191. N E O - M U L L - S O Y. The Borden Company. SN 275,910. Pub. 6-4-68. Filed 7-13-67.

855,192. DANSK KOKKEN. Canada Packers Limited. SN 277,020. Pub. 6-4-68. Filed 7-28-67.

855,193. CARNATION. Carnation Company. SN 277,535. Pub. 6-4-68. Filed 8-4-67.

855,194. SLENDER. Carnation Company. SN 277,536. Pub. 6-4-68. Filed 8-4-67.

855,195. CONTADINA. Carnation Company. SN 278,870. Pub. 6-4-68. Filed 8-23-67.

855,196. BAR-NONE. Vincent Bar-None Company, Inc. SN 279,125. Pub. 6-4-68. Filed 8-25-67.

855,197. SOUTHERN SUN. H. P. Hood & Sons, Inc., d.b.a. Southern Sun Growers. SN 279,194. Pub. 6-4-68. Filed 8-28-67.

855,198. BC AND DESIGN. The B & C Baking Co. Inc., d.b.a. The B-C Baking Co., Inc., and B-C Baking Co., Inc. SN 279,923. Pub. 6-4-68. Filed 9-8-67.

855,199. SHOW QUEEN AND DESIGN. Tani Farms. SN 280,983. Pub. 6-4-68. Filed 9-22-67.

855,200. SWEET GEORGIA BROWN. Harvest Brand, Inc. SN 281,576. Pub. 6-4-68. Filed 10-2-67.

855,201. BONANZA. Bonanza Macaroni Co. SN 283,162. Pub. 6-4-68. Filed 10-23-67.

855,202. STILTS. Frito-Lay, Inc. SN 283,335. Pub. 6-4-68. Filed 10-25-67.

855,203. PRETZ-O-S. Sunshine Biscuits, Inc. SN 284,752. Pub. 6-4-68. Filed 11-13-67.

855,204. KRAZY LITTLE COMICS. Topps Chewing Gum, Incorporated. SN 284,761. Pub. 6-4-68. Filed 11-13-67.

855,205. RICO'S. National Food Industries, Inc. SN 285,042. Pub. 6-4-68. Filed 11-16-67.

855,206. ELKES AND DESIGN. Elkes Biscuits Limited. SN 285,215. Pub. 6-4-68. Filed 11-20-67.

855,207. MAHATMA. Riviana Foods Inc. SN 285,764. Pub. 6-4-68. Filed 11-28-67.

855,208. LORD MOTT'S AND DESIGN. Duffy-Mott Company, Inc. SN 286,111. Pub. 6-4-68. Filed 12-4-67.

855,209. FLYING JIB. Golden Shore Seafoods, Inc. SN 286,425. Pub. 6-4-68. Filed 12-7-67.

855,210. PMT. Lacnutrients, Inc. SN 286,764. Pub. 6-4-68. Filed 12-12-67.

855,211. CRYSTAL PURE. Crystal Pure Candy Company. SN 286,880. Pub. 6-4-68. Filed 12-14-67.

855,212. OLD FORT. Associated Wild Rice Producers, Inc. SN 286,994. Pub. 6-4-68. Filed 12-15-67.

855,213. CONQUISTADOR. Crest Brokerage Company. SN 288,740. Pub. 6-4-68. Filed 1-15-68.

855,214. CABRILLO AND DESIGN. Tani Farms. SN 291,011. Pub. 6-4-68. Filed 2-14-68.

855,215. FROSTEROOP. Mattel, Inc. SN 292,852. Pub. 6-4-68. Filed 3-11-68.

855,216. HOT SHOT. Universal Packers Corporation, d.b.a. J. D. Packing Co. SN 292,870. Pub. 6-4-68. Filed 3-11-68.

Class 47 — Wines

855,217. TIO MATEO. Palomino & Vergara. SN 288,227. Pub. 6-4-68. Filed 1-5-68.

Class 49 — Distilled Alcoholic Liquors

855,218. ROYAL GUEST. Norman Williams Co., assignee of E. Martinoni Company. SN 281,804. Pub. 5-21-68. Filed 10-4-67.

Class 50 — Merchandise Not Otherwise Classified

854,970. (See Class 8 for this trademark.)

855,123. (See Class 38 for this trademark.)

855,219. VINCENZA. Faster-Form Corporation. SN 289,290. Pub. 6-4-68. Filed 1-22-68.

855,220. POLY-PALLETS. Sullifoam, Inc. SN 292,331. Pub. 6-4-68. Filed 3-4-68.

Class 51 — Cosmetics and Toilet Preparations

855,139. (See Class 39 for this trademark.)

855,221. INTERNATIONAL COLLECTION. Yardley of London, Inc. SN 263,307. Pub. 6-4-68. Filed 1-25-67.

855,222. RONDEAU. Rexall Drug and Chemical Company, d.b.a. Vanda Cosmetics Company. SN 266,786. Pub. 6-4-68. Filed 3-15-67.

855,223. POLISH-UP. Yardley of London, Inc. SN 268,641. Pub. 6-4-68. Filed 4-7-67.

855,224. THE WORLD'S MOST EXQUISITE GIFT. Candygram, Inc., d.b.a. Perfume-By-Wire. SN 270,045. Pub. 6-4-68. Filed 4-26-67.

855,225. CROWN MAGIC. Amole, Incorporated. SN 272,795. Pub. 6-4-68. Filed 6-1-67.

855,226. VANDA. Rexall Drug and Chemical Company, d.b.a. Vanda Cosmetics Company. SN 273,115. Pub. 6-4-68. Filed 6-5-67.

855,227. TOPLESS. Chas. Pfizer & Co., Inc. SN 273,412. Pub. 6-4-68. Filed 6-8-67.

855,228. DESIGN OF ROMAN SOLDIER. Shields, Inc. of Attleboro, Mass. SN 273,907. Pub. 6-4-68. Filed 6-14-67.

855,229. KONSERVERA. The Mennen Company. SN 274,080. Pub. 6-4-68. Filed 6-16-67.

855,230. MISCELLANEOUS DESIGN. A. Niggi & C. S.N.C. SN 274,831. Pub. 6-4-68. Filed 3-13-67.

855,231. BEACH PAINT. Chap Stick Company. SN 275,033. Pub. 6-4-68. Filed 6-29-67.

855,232. YSL. Lanvin-Charles of the Ritz, Inc. SN 275,348. Pub. 6-4-68. Filed 7-5-67.

855,233. GARANCE. Inexco S.A. SN 275,669. Pub. 6-4-68. Filed 7-10-67.

855,234. UNTIL NOW. Avon Products, Inc. SN 275,736. Pub. 6-4-68. Filed 7-11-67.

855,235. HANG LOOSE. Aerosol Techniques Research Center, Inc. SN 275,989. Pub. 6-4-68. Filed 7-14-67.

855,236. SWING LOOSE. Aerosol Techniques Research Center, Inc. SN 275,990. Pub. 6-4-68. Filed 7-14-67.

855,237. CHAMPAGNE SPARKLE. Samuel Bonat & Bro., Inc. SN 276,215. Pub. 6-4-68. Filed 7-18-67.

855,238. THE BODY LIFT. Bristol-Myers Company. SN 276,305. Pub. 6-4-68. Filed 7-19-67.

855,239. PRUROIL. Pure Pharmacal Company. SN 276,468. Pub. 6-4-68. Filed 7-20-67.

855,240. FLEXILUBE. Pure Pharmacal Company. SN 276,469. Pub. 6-4-68. Filed 7-20-67.

855,241. ARNOLDS. Arnolds Incorporated. SN 276,729. Pub. 6-4-68. Filed 7-25-67.

855,242. VISIBLE BEAUTY. John H. Breck, Inc. SN 276,732. Pub. 6-4-68. Filed 7-25-67.

855,243. WAKE UP 'N GO. Bristol-Myers Company. SN 276,813. Pub. 6-4-68. Filed 7-26-67.

855,244. WAKE UP 'N LIVE. Bristol-Myers Company. SN 277,140. Pub. 6-4-68. Filed 7-31-67.

855,245. TURN ON. Bristol-Myers Company. SN 277,141. Pub. 6-4-68. Filed 7-31-67.

855,246. EXTRADENT. Bristol-Myers Company. SN 277,254. Pub. 6-4-68. Filed 8-1-67.

855,247. FRESH DAY. Bristol-Myers Company. SN 277,429. Pub. 6-4-68. Filed 8-3-67.

855,248. MOUNTAIN LAUREL. Avon Products, Inc. SN 277,767. Pub. 6-4-68. Filed 8-8-67.

855,249. UNDER THE SUN. Avon Products, Inc. SN 277,769. Pub. 6-4-68. Filed 8-8-67.

855,250. CAPTAIN KIDD. The Mennen Company. SN 278,020. Pub. 6-4-68. Filed 8-10-67.

855,251. TOUR PAC. The Mennen Company. SN 278,021. Pub. 6-4-68. Filed 8-10-67.

855,252. MILK OF KINDNESS. Clairol Incorporated. MULTIPLE CLASS (Classes 51 and 52). SN 282,020. Pub. 6-4-68. Filed 10-4-67.

855,253. TAKE SHAPE. Clairol Incorporated. MULTIPLE CLASS (Classes 51 and 52). SN 282,023. Pub. 6-4-68. Filed 10-9-67.

855,254. TAKE HOLD. Clairol Incorporated. MULTIPLE CLASS (Classes 51 and 52). SN 282,024. Pub. 6-4-68. Filed 10-9-67.

855,255. MICRO-SHAVE. Skyline Ind., Inc. SN 289,950. Pub. 6-4-68. Filed 1-31-68.

Class 52 — Detergents and Soaps

854,939. (See Class 2 for this trademark.)

855,119. (See Class 37 for this trademark.)

855,252. (See Class 51 for this trademark.)

855,253. (See Class 51 for this trademark.)

855,254. (See Class 51 for this trademark.)

855,256. WASHBALLS COLONIAL AND DESIGN. Carolina Company, Inc., d.b.a. The Carolina Soap & Candle Makers. SN 200,232. Pub. 6-4-68. Filed 8-20-64.

855,257. IMPREVU. Chas. Pfizer & Co., Inc. SN 265,917. Pub. 6-4-68. Filed 3-3-67.

855,258. KONSERVERA. The Mennen Company. SN 274,081. Pub. 6-4-68. Filed 6-16-67.

855,259. UNTIL NOW. Avon Products, Inc. SN 275,737. Pub. 6-4-68. Filed 7-11-67.

855,260. MEDIHEX AND DESIGN. A. H. Good Corporation. SN 281,789. Pub. 6-4-68. Filed 10-4-67.

855,261. GOLDEN DEW AND DESIGN. Like Me Products Co. SN 281,802. Pub. 6-4-68. Filed 10-4-67.

855,262. GULF AND DESIGN. Gulf Oil Corporation. SN 282,081. Pub. 6-4-68. Filed 10-9-67.

855,263. GULF. Gulf Oil Corporation. SN 282,082. Pub. 6-4-68. Filed 10-9-67.

855,264. SILHOUETTE DESIGN OF A FEMALE HUMAN HEAD. J. P. Corrigan, d.b.a. Shyanne Co. SN 283,105. Pub. 6-4-68. Filed 10-23-67.

855,265. ALPHA-CC. Optometics, Inc. SN 284,233. Pub. 6-4-68. Filed 11-6-67.

855,266. MAGIC MAID. Miraco Manufacturing, Inc. SN 291,815. Pub. 6-4-68. Filed 2-26-68.

Service Marks

Class 100 — Miscellaneous

854,970. (See Class 8 for this trademark.)

855,267. TRAVEL GUILD OF AMERICA AND DESIGN. Travel Guild of America, Inc. SN 238,802. Pub. 6-4-68. Filed 2-14-66.

855,268. MBA AND DESIGN. Milwaukee Bar Association. SN 250,502. Pub. 6-4-68. Filed 7-18-66.

855,269. WILLIAMS BROTHERS. Williams Brothers Company. MULTIPLE CLASS (Classes 100 and 103). SN 253,385. Pub. 6-4-68. Filed 8-29-66.

855,270. FOOD BAZAAR AND DESIGN. Transamerica Development Company. SN 258,941. Pub. 6-4-68. Filed 11-17-66.

855,271. UTC. United Aircraft Corporation. SN 259,490. Pub. 6-4-68. Filed 11-25-66.

855,272. CNS. The Copley Press, Inc., d.b.a. Copley News Service. SN 266,145. Pub. 6-4-68. Filed 3-7-67.

855,273. COUNTRY KITCHEN HOME OF THE FAMOUS COUNTRY BOY AND DESIGN. Country Kitchen Incorporated, of Middletown, Ohio. SN 267,816. Pub. 6-4-68. Filed 3-29-67.

855,274. PEAR PARDRITGE AND DESIGN. Pear and Pardritge, Inc. SN 273,206. Pub. 6-4-68. Filed 6-6-67.

855,275. MISCELLANEOUS DESIGN. Ingersoll Incorporated. SN 273,555. Pub. 6-4-68. Filed 6-12-67.

855,276. LIL' DUFFER AND DESIGN. Lil' Duffer of America, Inc. SN 274,432. Pub. 6-4-68. Filed 6-21-67.

855,277. H (DESIGN). Hilton Hotels Corporation. SN 277,170. Pub. 6-4-68. Filed 7-31-67.

855,278. TREE SYMBOL. Big West Oil Company of Montana, d.b.a. Spokane House Motor Hotel. SN 282,431. Pub. 6-4-68. Filed 10-13-67.

855,279. SIRLOIN STOCKADE ETC. AND DESIGN. Sirloin Stockade, Inc. SN 283,284. Pub. 6-4-68. Filed 10-24-67.

Class 101 — Advertising and Business

855,123. (See Class 38 for this trademark.)

855,280. CARRIAGE LANE. Carson Pirie Scott & Co., d.b.a. Carriage Lane. SN 234,878. Pub. 6-4-68. Filed 12-20-65.

855,281. MEDIA AMERICANA. John C. Lucht. SN 251,735. Pub. 6-4-68. Filed 8-4-66.

855,282. TYMSHARE AND DESIGN. Tymshare Inc. SN 256,155. Pub. 6-4-68. Filed 10-10-66.

855,283. DAIRY QUEEN. American Dairy Queen Corporation. SN 259,387. Pub. 6-4-68. Filed 11-25-66.

855,284. ECS. Employee Communications Service, Inc. SN 259,536. Pub. 6-4-68. Filed 11-28-66.

855,285. MISCELLANEOUS DESIGN. Manette, Inc. SN 259,947. Pub. 6-4-68. Filed 12-2-66.

855,286. GOLD KEY INN AND DESIGN. Motel Management, Inc. SN 265,093. Pub. 6-4-68. Filed 2-20-67.

855,287. MISCELLANEOUS DESIGN. Heritage Land Sales, Inc. SN 266,757. Pub. 6-4-68. Filed 3-15-67.

855,288. BRIDAL FAIR. Star Stations, Inc. SN 266,797. Pub. 6-4-68. Filed 3-15-67.

855,289. BANKSERV. Arthur S. Kranzley and Company, Incorporated, d.b.a. Information Sciences Associates. SN 268,419. Pub. 6-4-68. Filed 4-5-67.

Class 102 — Insurance and Financial

855,290. MISCELLANEOUS DESIGN. Financial Programs, Inc. SN 250,948. Pub. 6-4-68. Filed 7-25-66.

855,291. MISCELLANEOUS DESIGN. Financial Programs, Inc., assignee of Financial Industrial Income Fund, Inc. SN 250,949. Pub. 6-4-68. Filed 7-25-66.

855,292. MISCELLANEOUS DESIGN. Financial Programs, Inc., assignee of Financial Industrial Fund, Inc. SN 250,950. Pub. 6-4-68. Filed 7-25-66.

855,293. THE KING OF QUEENS INSURANCE AGENCY AND DESIGN. Charles W. Parker, d.b.a. The King of Queens Insurance Agency. SN 263,287. Pub. 6-4-68. Filed 1-25-67.

855,294. INA AGPAK. Insurance Company of North America. SN 272,608. Pub. 6-4-68. Filed 5-29-67.

855,295. INA CHIEFTAIN. Insurance Company of North America. SN 272,609. Pub. 6-4-68. Filed 5-29-67.

855,296. MISCELLANEOUS DESIGN. First National Bank of Huntsville, Alabama. SN 274,963. Pub. 6-4-68. Filed 6-28-67.

855,297. INA-LIFE. Insurance Company of North America. SN 293,086. Pub. 6-4-68. Filed 3-13-68.

Class 103 — Construction and Repair

855,269. (See Class 100 for this trademark.)

855,298. "MR. MERIT AT YOUR SERVICE" MERIT SERVICE NORGE AND DESIGN. Borg-Warner Corporation (Delaware corporation), assignee of Borg-Warner Corporation (Illinois corporation). SN 251,117. Pub. 6-4-68. Filed 7-27-66.

855,299. H/S AND DESIGN. International Hydrographic Services, Inc. SN 252,259. Pub. 6-4-68. Filed 8-12-66.

855,300. WORK WEAR ETC. AND DESIGN. Work Wear Corporation. SN 264,269. Pub. 6-4-68. Filed 2-8-67.

855,301. CAR-CHEK AND DESIGN. Car-Chek Diagnostic Systems, Inc. SN 265,983. Pub. 6-4-68. Filed 3-6-67.

855,302. AE AND DESIGN. Alliance Exterminating Co., Inc. SN 268,564. Pub. 6-4-68. Filed 4-7-67.

855,303. ACTIONALYSIS. Bear Manufacturing Company. SN 274,704. Pub. 6-4-68. Filed 6-26-67.

855,304. NATIONAL PRIDE. Pride Manufacturing, Inc. SN 281,392. Pub. 6-4-68. Filed 9-28-67.

Class 105 — Transportation and Storage

855,305. ACE AND DESIGN. Ace Van and Storage Co., Inc. SN 263,881. Pub. 6-4-68. Filed 2-3-67.

855,306. CENTRAL AMERICA A LA CARTE. United Tours, Inc. SN 265,572. Pub. 6-4-68. Filed 2-27-67.

855,307. JIM WILSON SERVICE. American Airlines, Inc. SN 265,880. Pub. 6-4-68. Filed 3-3-67.

855,308. W AND ARROW (DESIGN). Wright Air Lines, Inc. SN 267,213. Pub. 6-4-68. Filed 3-20-67.

855,309. HERITAGE TOURS. Heritage Tours, Inc. SN 267,754. Pub. 6-4-68. Filed 3-28-67.

855,310. INSTA-CAR. Avis Rent-A-Car System, Inc. SN 282,428. Pub. 6-4-68. Filed 10-13-67.

855,311. CONTINENTAL HOLIDAYS. Continental Air Lines, Inc. SN 283,769. Pub. 6-4-68. Filed 10-31-67.

Class 106 — Material Treatment

855,312. SYNTHA-SET. Piedmont Chemical Industries, Inc. SN 262,616. Pub. 6-4-68. Filed 1-16-67.

855,313. SKRUDLAND PHOTO SERVICE AND DESIGN. Gabriel Skrudland, d.b.a. Skrudland Photo Service. SN 266,104. Pub. 6-4-68. Filed 3-6-67.

855,314. WANARA. Paris Processing Corp. SN 266,447. Pub. 6-4-68. Filed 3-10-67.

Class 107 — Education and Entertainment

855,315. MIAMI DOLPHINS AND DESIGN. Miami Dolphins, Ltd. SN 254,303. Pub. 6-4-68. Filed 9-12-66.

855,316. WILDERNESS UNLIMITED. Thomas H. Cloyd. SN 255,874. Pub. 6-4-68. Filed 10-6-66.

855,317. THE HUM-DINGERS. Barry Ennis. SN 262,322. Pub. 6-4-68. Filed 1-12-67.

855,318. TECHNITAPE. Jerome G. Reed, d.b.a. ENR Technitape Network. SN 263,943. Pub. 6-4-68. Filed 2-3-67.

855,319. SOX. Artnell Company. SN 267,303. Pub. 6-4-68. Filed 3-22-67.

855,320. SOX (DESIGN). Artnell Company. SN 267,306. Pub. 6-4-68. Filed 3-22-67.

855,321. THE MARK III ORCHESTRA. Benjamin Hulkower and Seymour Kushner (joint owners). SN 271,709. Pub. 6-4-68. Filed 5-17-67.

Collective Membership Mark

Class 200

855,322. THE GENERAL CHURCH OF THE NEW JERUSALEM. The General Church of the New Jerusalem. SN 273,058. Pub. 6-4-68. Filed 6-5-67.

SUPPLEMENTAL REGISTER

These registrations are not subject to opposition.

Class 1 — Raw or Partly Prepared Materials

855,323. Jackson & Perkins Company, Medford, Oreg. SN 264,746. Filed P.R. 2-15-67; Am. S.R. 6-13-68.

BULB OF THE MONTH CLUB

For Bulbs—Namely, Gladiola Bulbs (Int. Cl. 31).
First use Jan. 3, 1967.

855,324. Art-Brite Color & Chemical Mfrs., Jersey City, N.J. SN 276,802. Filed P.R. 7-26-67; Am. S.R. 6-10-68.

MODEL-METAL

For Metallic Modeling Compound (Int. Cl. 6).
First use on or about May 1, 1966.

Class 2 — Receptacles

855,325. Garrett-Hewitt International, Inc., Redwood City, Calif. SN 241,890. Filed P.R. 3-25-66; Am. S.R. 6-10-68.

Siphonette
BY Collette OF California

For Pressurized Container and Dispenser for Hair Spray and Other Aerosol-Packaged Cosmetics (Int. Cl. 21).
First use on or about Jan. 25, 1966.

Class 4 — Abrasives and Polishing Materials

855,326. Stanley Home Products, Inc., Westfield, Mass. SN 281,129. Filed P.R. 9-25-67; Am. S.R. 6-17-68.

LUSTRE LAST

For Silver Polish (Int. Cl. 3).
First use July 21, 1964.

Class 6 — Chemicals and Chemical Compositions

855,327. Piggly Wiggly Operators' Warehouse, Inc., Shreveport, La. SN 272,625. Filed P.R. 5-29-67; Am. S.R. 6-6-68.

GoBrite

For Household Bleach (Int. Cl. 3).
First use May 1, 1967.

Class 18 — Medicines and Pharmaceutical Preparations

855,328. Richardson-Merrell Inc., New York, N.Y. SN 257,195. Filed P.R. 10-25-66; Am. S.R. 4-10-68.

BLUE MINT

For Cough Drops (Int. Cl. 5).
First use Sept. 16, 1966.

Class 26 — Measuring and Scientific Appliances

855,329. Hy-Cal Engineering, Santa Fe Springs, Calif. SN 261,216. Filed P.R. 12-21-66; Am. S.R. 6-10-68.

HEATSCOPE

For Electrical Instruments, Systems, and Components, Heat-Flow Meters and Parts Thereof (Int. Cl. 9).
First use on or about Aug. 15, 1966.

Class 28 — Jewelry and Precious-Metal Ware

855,330. Anne Krohn Graham, Jacksonville, N.C. SN 279,478. Filed P.R. 8-31-67; Am. S.R. 6-19-68.

GRAHAM

For Jewelry (Int. Cl. 14).
First use Oct. 6, 1966.

Class 36 — Musical Instruments and Supplies

855,331. Carmelo Fonseca, d.b.a. Fonseca Record Co., New York, N.Y. SN 266,650. Filed P.R. 3-14-67; Am. S.R. 6-21-68.

FONSECA

For Grooved Phonograph Records (Int. Cl. 9).
First use on or about July 1, 1965.

Class 38 — Prints and Publications

855,332. Chase Bag Company, New York, N.Y. SN 286,324. Filed 12-6-67.

BAGOLOGY IS THE SCIENCE OF GOOD BAGS

For Section of a Trade Magazine (Int. Cl. 16).
First use as early as June 1937.

Class 45 — Soft Drinks and Carbonated Waters

855,333. Arden-Mayfair, Inc., d.b.a. A.F. Co., Los Angeles, Calif., assignee of Heintz-Malatesta-Martini, Inc., Hollywood, Calif. SN 263,878. Filed P.R. 2-3-67; Am. S.R. 1-26-68.

PUNCHIE

For Artificial Flavored Fruit Drink Containing Water Sold in Paper Container (Int. Cl. 32).
First use Jan. 20, 1967.

855,334. Arden-Mayfair, Inc., d.b.a. A.F. Co., Los Angeles, Calif., assignee of Heintz-Malatesta-Martini, Inc., Hollywood, Calif. SN 263,880. Filed P.R. 2-3-67; Am. S.R. 1-26-68.

THE MIXED UP DRINK

For Artificial Flavored Fruit Drink Containing Water Sold in Paper Container (Int. Cl. 32).
First use Jan. 20, 1967.

855,335. National Nugrape Company, Atlanta, Ga. SN 266,775. Filed P.R. 3-15-67; Am. S.R. 6-7-68.

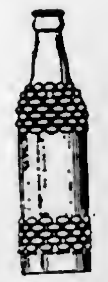

For Soft Drinks (Int. Cl. 32).
First use during 1939.

Class 46 — Foods and Ingredients of Foods

855,336. The Frozen Food Forum, Inc., Atlanta, Ga. SN 248,224. Filed 6-16-66.

TASTY TATERS

For Shredded Pre-Cooked Frozen French Fried Potatoes (Int. Cl. 29).
First use on or about Mar. 9, 1959.

855,337. National Starch and Chemical Corporation, New York, N.Y. SN 254,399. Filed P.R. 9-13-66; Am. S.R. 11-2-67.

CRISP FILM

For Dry, Modified Starch Containing at Least 50% Amylose, for Use in Food Products (Int. Cl. 30).
First use Jan. 10, 1966.

855,338. Oscar Mayer & Co., Inc., Chicago, Ill. SN 259,750. Filed P.R. 11-30-66; Am. S.R. 6-14-68.

SERVE 'N SEAL RIGID-PAK

For Food Products—Namely, Sliced Luncheon Meats (Int. Cl. 29).
First use Nov. 16, 1966.

855,339. Daniel Bassi & Compania, Sociedad Anonima Comercial e Industrial, Buenos Aires, Argentina. SN 272,345. Filed P.R. 5-25-67; Am. S.R. 11-28-67.

BASSI

Owner of Argentine Reg. No. 411,655, dated July 21, 1959.
For Candies, Sweet Potato Jam, Quince Jam, Jellies, Glazed Fruits, Marmalade, Honey and Almond Paste (Int. Cls. 29 and 30).

855,340. Continental Baking Company, Rye, N.Y. SN 275,240. Filed P.R. 7-3-67; Am. S.R. 6-3-68.

CABOT'S

For Bread (Int. Cl. 30).
First use Apr. 24, 1967.

Class 51 — Cosmetics and Toilet Preparations

855,341. Avon Products, Inc., New York, N.Y. SN 281,677. Filed 10-3-67.

CURL 'N' COLOR

For Mascara in a Roll-On Applicator (Int. Cl. 3).
First use July 1, 1959.

855,342. Avon Products, Inc., New York, N.Y. SN 281,958. Filed 10-6-67.

RICH MOISTURE

For Body Lotion, Hand Lotion, Hand Cream and Night Cream (Int. Cl. 3).
First use Dec. 31, 1958.

Service Marks

Class 107 — Education and Entertainment

855,343. C-E-I-R, Inc., Washington, D.C., assignee of Automation Institute of America, Inc., San Francisco, Calif. SN 242,542. Filed P.R. 4-4-66; Am. S.R. 2-12-68.

AUTOMATION INSTITUTE

For Education and Training Services in Connection With the Automation Data Processing Systems (Int. Cl. 41).
First use Feb. 1, 1956.

Collective Membership Mark

Class 200

855,344. Professional Photographers of Ohio, Inc., Columbus, Ohio. SN 218,239. Filed P.R. 5-5-65; Am. S.R. 9-18-67.

For Indicating Membership in Applicant.
First use on or before Sept. 6, 1962.

TRADEMARK REGISTRATIONS RENEWED

32,058. MONITOR. Cl. 35 (Int. Cl. 17). 10-18-1898.
68,978. "BOATMANS" AND DESIGN. Cl. 46 (Int. Cl. 29). 5-12-08.
69,043. CROTORITE. Cl. 14 (Int. Cl. 6). 5-19-08.
69,067. IMMADIUM. Cl. 14 (Int. Cl. 6). 5-19-08.
69,576. PEVEE. Cl. 1 (Int. Cl. 18). 6-23-08.
69,577. P & V. Cl. 1 (Int. Cl. 18). 6-23-08.
69,620. TRIUMPH. Cl. 48 (Int. Cl. 32). 6-23-08.
69,625. BAND OF A LEAD PENCIL LINED FOR RED AND SILVER. Cl. 37 (Int. Cl. 16). 6-23-08.
70,827. "DMC" ETC. AND DESIGN. Cl. 43 (Int. Cl. 23). 10-6-08.
239,568. DEOD-O-ROMA. Cl. 6 (Int. Cl. 5). 3-6-28.
240,239. LIGHTSTEP. Cl. 39 (Int. Cl. 25). 3-20-28.
240,415. NOX-KWIK. Cl. 6 (Int. Cl. 5). 3-27-28.
241,928. KILRITE. Cl. 6 (Int. Cl. 5). 5-8-28.
242,071. AMMO. Cl. 52 (Int. Cl. 3). 5-15-28.
242,563. "CAMELLIA" AND REPRESENTATION OF FLOWER. Cl. 46 (Int. Cl. 29). 5-29-28.
242,650. MISTINESE. Cl. 42 (Int. Cl. 24). 5-29-28.
243,227. PENT-ACETATE. Cl. 6 (Int. Cl. 1). 6-12-28.
243,479. "G" AND MEDALLION DESIGN. Cl. 13 (Int. Cls. 6 and 11). 6-26-28.
243,589. ECO. Cl. 23 (Int. Cl. 7). 6-26-28.
243,844. HART. Cl. 46 (Int. Cl. 29). 7-3-28.
243,919. "LILY WHITE BRAND" AND REPRESENTATION OF A FISH. Cl. 46 (Int. Cl. 29). 7-3-28.
243,990. PULLMANITE. Cl. 14 (Int. Cl. 6). 7-3-28.
244,167. ATLANTIC. Cl. 34 (Int. Cl. 11). 7-17-28.
244,252. IVANHOE. Cl. 45 (Int. Cl. 32). 7-17-28.
244,433. MORNING GLORY. Cl. 46 (Int. Cl. 29). 7-17-28.
245,850. INDIAN QUEEN. Cl. 45 (Int. Cl. 32). 8-21-28.
246,280. "MOVEO ET PROFICIO" AND DESIGN. Cl. 39 (Int. Cl. 25). 9-4-28.
247,284. "BROWN'S SUPERCEDAR" ETC. AND REPRESENTATION OF CEDAR TREE. Cl. 6 (Int. Cl. 4). 9-25-28.
247,452. REPRESENTATION OF A FOOT AND ARCH IN FOOT. Cl. 44 (Int. Cl. 10). 9-25-28.
248,129. SMART. Cl. 17 (Int. Cl. 34). 10-16-28.
248,203. CLOVER FARM. Cl. 46 (Int. Cls. 29 and 30). 10-16-28.
248,230. HAIR GROOM. Cl. 51 (Int. Cl. 3). 10-16-28.
248,557. INDIAN. Cl. 23 (Int. Cls. 7 and 8). 10-23-28.
249,305. "JACQUELINE" ETC. Cl. 39 (Int. Cl. 25). 11-13-28.
249,419. OAKITE. Cl. 52 (Int. Cls. 1 and 3). 11-13-28.
249,574. MODECRAFT. Cl. 39 (Int. Cl. 25). 11-20-28.
249,634. PROTECTA. Cl. 51 (Int. Cl. 3). 11-20-28.
249,687. METRAZOL. Cl. 18 (Int. Cl. 5). 11-20-28.
249,772. PEE-WEE. Cl. 46 (Int. Cl. 29). 11-20-28.
249,958. PACO. Cl. 46 (Int. Cl. 29). 11-27-28.
250,076. TRE-JUR. Cl. 29 (Int. Cl. 21). 11-27-28.
250,177. EDEN PARK. Cl. 1 (Int. Cl. 31). 12-4-28.
429,582. WOODEE. Cl. 52 (Int. Cl. 3). 5-6-47.
430,241. WOODEE. Cl. 4 (Int. Cl. 3). 6-10-47.
434,836. HARTLEY OCTOPUS AND DESIGN. Cl. 21 (Int. Cl. 9). 12-9-47.
435,416. WHY NOT? Cl. 38 (Int. Cl. 16). 12-23-47.
437,856. HYOTOLE. Cl. 18 (Int. Cl. 5). 3-30-48.
438,088. RH AND DESIGN. Cl. 21 (Int. Cl. 9). 4-6-48.
438,636. LEE'S PROFITIZER. Cl. 26 (Int. Cl. 9). 5-4-48.
438,861. LEE'S AMORTIZER. Cl. 26 (Int. Cl. 9). 5-11-48.
439,016. FLOORCRETE. Cl. 12 (Int. Cl. 19). 6-1-48.
439,157. SYROCOWOOD. Cl. 50 (Int. Cl. 20). 6-8-48.
439,393. VIGOR. Cl. 23 (Int. Cl. 8). 6-22-48.
439,698. NHE. Cl. 14 (Int. Cls. 6 and 9). 8-17-48.
439,712. NOVA. Cl. 27 (Int. Cl. 14). 7-13-48.
439,724. SUNOCO. Cl. 35 (Int. Cls. 12 and 17). 7-13-48.
439,938. SUNOCO. Cl. 4 (Int. Cl. 3). 7-27-48.
440,131. TEXITE. Cl. 39 (Int. Cl. 25). 8-10-48.
440,460. DUOMO. Cl. 46 (Int. Cls. 29 and 30). 9-7-48.
440,552. AMVETS. Cl. 28 (Int. Cl. 14). 9-14-48.
440,700. WURCO. Cl. 2 (Int. Cl. 16). 9-21-48.
441,169. JIFFY. Cl. 6 (Int. Cls. 1 and 5). 10-26-48.
441,403. S AND DESIGN. Cl. 34 (Int. Cl. 11). 11-23-48.
441,404. SELAS. Cl. 34 (Int. Cl. 11). 11-23-48.
441,558. STARSPAR. Cl. 16 (Int. Cl. 2). 12-7-48.
500,418. TRESAMIDE. Cl. 18 (Int. Cl. 5). 5-18-48.
500,657. NAIR. Cl. 51 (Int. Cl. 3). 6-15-48.
500,798. NYKO. Cl. 2 (Int. Cl. 21). 7-6-48.
500,827. LEHIGH AND DESIGN. Cl. 12 (Int. Cl. 19). 7-6-48.
500,861. STAR. Cl. 43 (Int. Cl. 23). 7-6-48.
500,862. STAR (DESIGN). Cl. 43 (Int. Cl. 23). 7-6-48.
500,914. TETRON. Cl. 6 (Int. Cl. 5). 7-6-48.
501,002. BRIGHTWATER. Cl. 37 (Int. Cl. 16). 7-13-48.
501,003. LYNFLAX. Cl. 37 (Int. Cl. 16). 7-13-48.
501,458. PRE-SMOKED. Cl. 8 (Int. Cl. 34). 8-10-48.
501,648. COMAL. Cl. 42 (Int. Cl. 24). 8-17-48.
501,651. SENIOR NUACE. Cl. 37 (Int. Cl. 16). 8-17-48.
502,018. ADVOCATE. Cl. 37 (Int. Cl. 16). 9-7-48.
502,170. DANDEE. Cl. 21 (Int. Cl. 9). 9-14-48.
502,440. INLAND. Cl. 14 (Int. Cl. 6). 9-28-48.
502,608. OLAC. Cl. 46 (Int. Cl. 5). 10-5-48.
502,618. JENNITE. Cl. 12 (Int. Cl. 19). 10-5-48.
502,777. STRETCHWAY. Cl. 39 (Int. Cl. 25). 10-12-48.
502,795. MIRACLE-TREAD AND DESIGN. Cl. 39 (Int. Cl. 25). 10-12-48.
502,854. BETTY WINSTON ORIGINAL. Cl. 39 (Int. Cl. 25). 10-12-48.
502,859. GLENMORE. Cl. 49 (Int. Cl. 33). 10-12-48.

502,861. LINDA. Cl. 39 (Int. Cl. 25). 10–12–48.
502,863. E-Z-BLO. Cl. 46 (Int. Cl. 30). 10–12–48.
503,134. MOONBEAM. Cl. 28 (Int. Cls. 8 and 14). 10–19–48.
503,140. LACTAMIN. Cl. 6 (Int. Cl. 1). 10–19–48.
503,178. NEW AND DESIGN. Cl. 34 (Int. Cl. 7). 10–19–48.
503,231. MEAD'S. Cl. 18 (Int. Cl. 5). 10–19–48.
503,247. LENTOPEN. Cl. 18 (Int. Cl. 5). 10–19–48.
503,249. AEROVOX. Cl. 21 (Int. Cl. 9). 10–19–48.
503,250. HOOFS & HORNS AND DESIGN. Cl. 38 (Int. Cl. 16). 10–19–48.
503,341. 4-WAY. Cl. 12 (Int. Cl. 6). 10–26–48.
503,463. A CANTON FABRIC AND DESIGN. Cl. 42 (Int. Cl. 24). 10–26–48.
503,623. UPLAND GOLD. Cl. 46 (Int. Cl. 31). 11–2–48.
503,625. BURGER BRAU. Cl. 48 (Int. Cl. 32). 11–2–48.
503,710. TAPICORN. Cl. 1 (Int. Cl. 31). 11–9–48.

TRADEMARK REGISTRATIONS CANCELED

Section 8

153,798. METRO PICTURES AND DESIGN. Cl. 26. 3–28–22.
306,670. "HOLMENKOL" AND DESIGN. Cl. 4. 9–26–33.
394,449. QUAKER MAID AND DESIGN. Cl. 39. 4–7–42.
396,766. 20 POINT PRESCRIPTION SERVICE ETC. Cl. 26. 8–4–42.
408,868. WATERSAND. Cl. 4. 8–29–44.
419,470. MICRO NU-COP. Cl. 6. 2–19–46.

The following registrations issued July 3, 1962

733,603. WONDERWEAVE. Cl. 1.
733,605. P PALMINI AND DESIGN. Cl. 2.
733,607. WINKIE TALKIE. Cl. 3.
733,609. ENPEOL-SULFONAT. Cl. 6.
733,610. SULFOXAL. Cl. 6.
733,619. POLYTRAP. Cl. 6.
733,621. FLOSPERSE. Cl. 6.
733,624. SCENTRY-GARD. Cl. 6.
733,626. AERO-SOLESSENCE. Cl. 6.
733,630. BALCOOL. Cl. 6.
733,631. PEN-E-TRATE. Cl. 6.
733,639. ELMER'S FLOOR GRIP. Cl. 6.
733,643. TEKPAK. Cl. 12.
733,647. STRESSDEC. Cl. 12.
733,650. TUFCON AND DOG DESIGN. Cl. 12.
733,656. V VELOS AND DESIGN. Cl. 13.
733,657. COR-TITE. Cl. 13.
733,661. WICARIT. Cl. 14.
733,662. SEANAIL. Cl. 14.
733,668. TEX-TOP. Cl. 16.
733,674. CAN-DU. Cl. 18.
733,675. PRO/STOMA. Cl. 18.
733,681. SERLOK. Cl. 18.
733,682. SERLOC. Cl. 18.
733,685. HOLOPON. Cl. 18.
733,686. BOGOLO. Cl. 18.
733,691. MIXOBAR. Cl. 18.
733,696. SEAPET. Cl. 19.
733,697. DURAPRENE. Cl. 19.
733,698. MAGI-KARPIT. Cl. 20.
733,700. FAX MIMEOFAX. Cl. 21.
733,706. TRENDTRONICS. Cl. 21.
733,710. DENNIS THE MENACE. Cl. 22.
733,711. SANTA'S VILLAGE. Cl. 22.
733,712. QUIKPAK. Cl. 22.
733,715. PIECES OF EIGHT. Cl. 22.
733,716. NITE-FLYER. Cl. 22.
733,717. GOLDEN NUGGET. Cl. 22.
733,718. MIDWEST. Cl. 22.
733,720. STA-PUT AND ARROW DESIGN. Cl. 22.
733,721. FIGURE-CIZER. Cl. 22.
733,727. REDDILIFT. Cl. 23.
733,729. "SMOG-GO" AND DESIGN. Cl. 23.
733,735. KLEEN SWEEP. Cl. 23.
733,739. NU RAY. Cl. 26.
733,740. BAILETRONIC. Cl. 26.
733,743. HI-SAFE-T. Cl. 26.
733,744. SPETEMP. Cl. 26.
733,745. SCULMATIC. Cl. 26.
733,746. ACS AND DESIGN. Cl. 26.
733,748. SILVER-KING. Cl. 26.
733,749. AUTOSCORE. Cl. 26.
733,756. INSTRUCTRON. Cl. 26.
733,759. LARC. Cl. 26.
733,762. BOLERO. Cl. 28.
733,766. BEAU BAIT. Cl. 28.
733,771. STREAMLINE. Cl. 32.
733,774. CORN CABIN DELICIOUS POPCORN PRODUCTS AND DESIGN. Cl. 34.
733,783. P AND DESIGN. Cl. 35.
733,784. WINTER SURE. Cl. 35.
733,785. FUTURA AND DESIGN. Cl. 36.
733,789. TERATHENE. Cl. 37.
733,793. AUTOSCORE. Cl. 37.
733,801. ANS-R-BOX. Cl. 38.
733,802. INPLANT FOOD MANAGEMENT. Cl. 38.
733,804. 1961–1965 VIRGINIA ETC. AND DESIGN. Cl. 38.
733,809. T. L. OSBORN'S FAITH DIGEST. Cl. 38.
733,811. MIKE SHAYNE PRIVATE EYE. Cl. 38.
733,813. GRP AND DESIGN. Cl. 38.
733,814. LINDA LARK REGISTERED NURSE. Cl. 38.
733,819. A CHILD'S WORLD. Cl. 38.
733,821. CUSTOM MAID. Cl. 39.
733,822. PLAY CHUMS AND DESIGN. Cl. 39.
733,824. GLORIA SWANSON. Cl. 39.
733,826. FRENCH MASTERS. Cl. 39.
733,834. NEW-ITY. Cl. 39.
733,836. MAGIC-GLOV. Cl. 39.
733,838. THE MAINE WOODSMAN. Cl. 39.
733,840. TREASURE CHEST. Cl. 42.
733,843. NEWPORT EAGLE. Cl. 42.
733,844. NEWPORT DOWRY. Cl. 42.
733,845. NEWPORT LEGACY. Cl. 42.
733,847. RECTALYT. Cl. 44.
733,848. MARCA DOS PUERQUITOS. Cl. 46.
733,850. VITA-N-RICH. Cl. 46.
733,855. VIOLET'S. Cl. 46.
733,863. HOLLYWOOD PRO-GHETTI. Cl. 46.
733,864. DELICA-SEA. Cl. 46.
733,865. DESIGN SHOWING AN OLD-STYLE MILLING OPERATION. Cl. 46.
733,868. MEMORIE. Cl. 46.
733,871. T-BAR. Cl. 46.
733,873. POST HUCKLE FLAKES. Cl. 46.
733,880. COUP. Cl. 46.
733,881. BOXTO. Cl. 46.
733,904. NO-PUP. Cl. 46.
733,905. DIXIE SILHOUETTE AND DESIGN. Cl. 47.
733,909. VODAK. Cl. 49.
733,911. TOCATTA. Cl. 51.
733,918. CORDON BLEU. Cl. 51.
733,925. PMT. Cl. 51.
733,927. PLEASE. Cl. 52.
733,935. SWIM. Cl. 52.
733,938. RE-BO. Cl. 52.
733,941. GIANT WASH. Cl. 101.
733,942. TELENUMBER AND DESIGN. Cl. 101.
733,943. NAMES YOU KNOW. Cl. 101.
733,949. COMPTOHELP. Cl. 101.
733,954. GIFTOUR. Cl. 105.
733,955. B AND ARROWS (DESIGN). Cl. 105.
733,956. STANDARD AIRWAYS SA AND DESIGN. Cl. 105.
733,958. THE HARMONICATS. Cl. 107.
733,959. THE NOSTS. Cl. 200.
733,961. UNION LABEL ETC. AND DESIGN. Cl. B.
733,966. STAK-EASY AND DESIGN. Cl. 21.
733,967. PRO MODEL. Cl. 22.
733,968. SPELL-N. Cl. 22.
733,969. CONTACTS OF KANSAS, INC. AND DESIGN. Cl. 26.
733,970. THE EYES OF AUTOMATION. Cl. 26.
733,975. TAP GRAB-N-SNAP AND ARROWS (DESIGN). Cl. 37.
733,976. "BOUND-TO-LAST" THE LIFE OF THE PAPER WHY PAY MORE? Cl. 38.
733,979. CHIANTI ALVINO. Cl. 47.
733,982. MATISSE RED. Cl. 51.
733,983. DISOLV-A-PAK. Cl. 52.

TRADEMARK REGISTRATIONS AMENDED, DISCLAIMED, CORRECTED, ETC.

439,707. ESBILAC. Cl. 46. 7–13–48. The Borden Company, New York, N.Y. Amended to appear:

ESBILAC

774,749. EXTRA RED. Cl. 51. 8–4–64. Nethercutt Laboratories, doing business as Cosgenic Labs., Los Angeles, Calif. Corrected: In the statement, column 1, after line 3, *Los Angeles, Calif. 90045* should be inserted.

843,636. FIRST FLIGHT AND DESIGN. Cl. 22. 2–6–68. Professional Golf Company, Chattanooga, Tenn. Amended to appear:

First Flight

846,624. MONSANTO AND DESIGN. Cls. 21, 26,27. 3–26–68. Monsanto Company, St. Louis, Mo. Corrected: In the statement, column 2, line 3, "general" should be deleted and *generating* should be inserted.

851,235. DUSTLESS. Cl. 46. 6–18–68. L. K. Baker and Company, doing business as M & R Food Service Company, Columbus, Ohio. Corrected: In the statement, column 1, line 1, "O." should be deleted and *L.* should be inserted.

TRADEMARK REGISTRATIONS—NEW CERTIFICATES

New Certificates issued under sections 7(c), 7(f), 7(g) of the Trademark Act of 1946 for the unexpired term of the original registrations.

542,927. TRADE-A-PLANE SERVICE. Cl. 38. Cosby P. Harrison. 5–29–51. New Cert. Sec. 7(c) to Trade-A-Plane, Crossville, Tenn.

545,694. ROCK & DIRT. Cl. 38. Cosby P. Harrison. 7–24–51. New Cert. Sec. 7(c) to Trade-A-Plane, Crossville, Tenn.

733,978. AUSTIN-HILL BT AND DESIGN. Cl. 39. Baltimore Trouser Co., Inc. 7–3–62. New Cert. Sec. 7(c) to Austin-Hill, Ltd., Baltimore, Md.

780,643. MONARCH. Cl. 38. Monarch Press, Inc. 11–24–64. New Cert. Sec. 7(c) to Simon & Schuster, Inc., New York, N.Y.

790,011. SAMOACLOTH. Cl. 39. Austin-Hill, Ltd. 5–25–65. New Cert. Sec. 7(c) to Austin-Hill, Ltd., Baltimore, Md.

818,053. RICA. Cl. 45. Raul Diaz. 11–1–66. New Cert. Sec. 7(c) to Cawy Bottling Co., Inc., Miami, Fla.

818,054. RICA SODA AND DESIGN. Cl. 45. Raul Diaz. 11–1–66. New Cert. Sec. 7(c) to Cawy Bottling Co., Inc., Miami, Fla.

832,611. MATERVA AND DESIGN. Cl. 45. Raul Diaz. 7–25–67. New Cert. Sec. 7(c) to Cawy Bottling Co., Inc., Miami, Fla.

INDEX OF REGISTRANTS

AUGUST 20, 1968

(Registered ; Renewed ; Canceled ; Amended, Disclaimed, Corrected, etc. ; New Certificates ; 12c Publications.)

A.F. Co. : *See*—
  Arden-Mayfair, Inc.
Ace Art Co., Reading, Mass. 501,651, ren. 8–20–68. Cl. 37.
Ace Mailing Service, Inc., d.b.a. Co-op Mailing Service, Atlanta, Ga. 733,943, canc. Cl. 101.
Ace Van & Storage Co., Inc., Washington, D.C. 855,305, pub. 6–4–68. Cl. 105.
Acme Backing Corp., New York, N.Y. 733,789, canc. Cl. 37.
Aerosol Techniques Research Center, Inc., Milford, Conn. 855,235–6, pub. 6–4–68. Cl. 51.
Aerovox Corp., New Bedford, Mass. 502,170, ren. 8–20–68. Cl. 21.
Aerovox Corp., New Bedford, Mass. 503,249, ren. 8–20–68. Cl. 21.
Air Products and Chemicals, Inc., Allentown, Pa. 855,086, pub. 6–4–68. Cl. 34.
Air Reduction Co., Inc., New York, N.Y. 855,024, pub. 6–4–68. Multiple Class (Classes 21, 26, and 39).
Airhardware, Inc., Van Nuys, Calif. 854,991, pub. 6–4–68. Cl. 13.
Aktiebolaget Astra, Apotekarnes Kemiska Fabriker, Sodertalje, Sweden. 733,691, canc. Cl. 18.
Aktiebolaget Deber-Kontrol, Lidingo, Sweden. 855,064, pub. 6–4–68. Cl. 26.
Alliance Exterminating Co., Inc., Merrick, N.Y. 855,302, pub. 6–4–68. Cl. 103.
Alvino, Riccardo, San Francisco, Calif. 733,979, canc. Cl. 47.
Amchem Products, Inc., Ambler, Pa. 854,975, pub. 6–4–68. Cl. 10.
Amco Wire Products Corp., Chicago, Ill. 733,966, canc. Cl. 21.
American Adhesives Inc., Brooklyn, N.Y. 854,947, pub. 6–4–68. Cl. 5.
American Airlines, Inc., New York, N.Y. 855,307, pub. 6–4–68. Cl. 105.
American Ammone Co., New York, N.Y., to Curley Co., Inc., Camden, N.J. 242,071, ren. 8–20–68. Cl. 52.
American Can Co., New York, N.Y. 854,942, pub. 6–4–68. Cl. 2.
American Cyanamid Co., New York, N.Y. 733,624, canc. Cl. 6.
American Cyanamid Co., Wayne, N.J. 854,964, pub. 6–4–68. Cl. 6.
American Dairy Queen Corp., Minneapolis, Minn. 855,283, pub. 6–4–68. Cl. 101.
American Fuel & Supply Co. : *See*—
  American Fuel & Supply Co., Inc.
American Fuel & Supply Co., Inc., d.b.a. American Fuel & Supply Co., Milwaukee, Wis. 854,956, pub. 6–4–68. Cl. 6.
American Home Products Corp. : *See*—
  Wesley, Edward, & Co.
  Wyeth Inc.
American Home Products, from Mallon Chemical Corp., New York, N.Y. 733,847, canc. Cl. 44.
American Home Products Corp., New York, N.Y. 855,003, pub. 6–4–68. Cl. 18.
American Home Products Corp., New York, N.Y. 855,013, pub. 6–4–68. Cl. 18.
American Hospital Supply Corp., Evanston, Ill. 855,142, pub. 6–4–68. Cl. 39.
American Hospital Supply Corp., Evanston, Ill., from Convertors Inc., Newark, N.J. 855,167, pub. 6–4–68. Cl. 44.
American Optical Corp., Southbridge, Mass. 855,168, pub. 6–4–68. Cl. 44.
American Potash & Chemical Corp. : *See*—
  Eston Chemicals, Inc.
American Products Co., The, to Royal Home Products, Inc., Richmond, Va., to Curley Co., Inc., Camden, N.J. 441,169, ren. 8–20–68. Cl. 6.
American Systems Inc., Hawthorne, Calif. 733,756, canc. Cl. 26.
American Thread Co., The, New York, N.Y. 500,861–2, ren. 8–20–68. Cl. 43.
American Veterans of World War II, Washington, D.C. 440,552, ren. 8–20–68. Cl. 28.
Amole, Inc., Dayton, Ohio. 855,225, pub. 6–4–68. Cl. 51.
Andersen, H. W., Products, Inc., Oyster Bay, N.Y. 855,021, pub. 6–4–68. Cl. 19.
Andrews, Gertrude K. : *See*—
  "Linda" Co., The.
Anger, Wilhelm, O.H.G., Traun, Austria. 855,063, pub. 4–9–68. Cl. 26.
Antognoli, Joseph, & Co., Chicago, Ill. 440,460, ren. 8–20–68. Cl. 46.
Arden, Elizabeth, Inc., to Elizabeth Arden Sales Corp., New York, N.Y. 249,634, ren. 8–20–68. Cl. 51.
Arden, Elizabeth, Sales Corp. : *See*—
  Arden, Elizabeth, Inc.
Arden-Mayfair, Inc., d.b.a. A.F. Co., Los Angeles, from Heintz-Malatesta-Martini, Inc., Hollywood, Calif. 855,-333–4. Cl. 45.
Armour Pharmaceutical Co., Chicago, Ill. 733,681–2, canc. Cl. 18.
Arnolds Inc., Little Rock, Ark. 855,241, pub. 6–4–68. Cl. 51.
Arrow Laboratories, Inc., New York, N.Y. 733,927, canc. Cl. 52.
Arrowsmith Mfg. Co., New York, N.Y., to Arrowsmith Mfg. Co., Inc., Chicago, Ill. 247,452, ren. 8–20–68. Cl. 44.
Arrowsmith Mfg. Co., Inc. : *See*—
  Arrowsmith Mfg. Co.
Art-Brite Color & Chemical Mfrs., Jersey City, N.J. 855,324. Cl. 1.
Artnell Co., Chicago, Ill. 855,319–20, pub. 6–4–68. Cl. 107.
Ashton Valve Co., The, Wrentham, Mass. 855,061, pub. 6–4–68. Cl. 26.
Associated Wild Rice Producers, Inc., Isle, Minn. 855,212, pub. 6–4–68. Cl. 46.
Astra Corp., New London, Conn. 733,749, canc. Cl. 26.
Astra Corp., New London, Conn. 733,793, canc. Cl. 37.
Atlantic Products Corp., from Atlantic Products Corp., Trenton, N.J. 855,042, pub. 6–4–68. Cl. 22.
Atlas Chemical Industries, Inc., Wilmington, Del. 854,953, pub. 6–4–68. Cl. 6.
Austin-Hill, Ltd. : *See*—
  Baltimore Trouser Co., Inc.
Austin-Hill, Ltd., to Austin-Hill, Ltd., Baltimore, Md. 790,-011, new cert. Cl. 39.
Austria Tabakwerke Aktiengesellschaft Vorm Oesterreichische Tabakregie : *See*—
  General-Direktion Der Osterr. Tabakregie.
Automatic Institute of America, Inc. : *See*—
  C-E-I-R, Inc.
Avis Rent-A-Car System, Inc., Garden City, N.Y. 855,310, pub. 6–4–68. Cl. 105.
Avon Products, Inc., New York, N.Y. 733,918, canc. Cl. 51.
Avon Products, Inc., New York, N.Y. 855,234, pub. 6–4–68. Cl. 51.
Avon Products, Inc., New York, N.Y. 855,248–9, pub. 6–4–68. Cl. 51.
Avon Products, Inc., New York, N.Y. 855,259, pub. 6–4–68. Cl. 52.
Avon Products, Inc., New York, N.Y. 855,341–2. Cl. 51.
B-C Baking Co., Inc., The : *See*—
  B & C Baking Co. Inc., The.
B & C Baking Co. Inc., The, d.b.a. The B-C Baking Co., Inc., and B-C Baking Co., Inc., Dayton, Ohio. 855,198, pub. 6–4–68. Cl. 46.
Babcock & Wilcox Co., New York, N.Y. 855,089, pub. 6–4–68. Cl. 34.
Babolat, Maillot, Witt, Lyon, France. 855,102, pub. 6–4–68. Cl. 36.
Bachi, Roberto, Jerusalem, Israel. 733,813, canc. Cl. 38.
Bailey Meters & Controls Ltd., Croydon, England. 733,740, canc. Cl. 26.
Baker, L. K., & Co., d.b.a. M & R Food Service Co., Columbus, Ohio. 851,235, cor. Cl. 46.
Balfour, Guthrie, & Co., Ltd., New York, N.Y. 733,630, canc. Cl. 6.
Ball, Ernie, Inc., Tarzana, Calif. 855,117–8, pub. 6–4–68. Cl. 36.
Baltimore Trouser Co., Inc., to Austin-Hill, Ltd., Baltimore, Md. 733,978, new cert. Cl. 39.
Barling, B., & Sons Ltd., London, England. 854,971, pub. 6–4–68. Cl. 8.
Barnett & Ramel Optical Co., Kansas City, Mo. 396,766, canc. Cl. 26.
Barrett & Co., Inc., Newark, N.Y. 854,936, pub. 6–4–68. Cl. 1.
Bassi, Daniel, & Compania, Sociedad Anonima Comercial e Industrial, Buenos Aires, Argentina. 855,339. Cl. 46.
Batchelor, Robert L., Bergenfield, N.J. 854,992–3, pub. 6–4–68. Cl. 15.
Battery Corp. of America, Fort Lauderdale, Fla. 855,030, pub. 6–4–68. Cl. 21.
Bay State Milling Co., Winona, Minn. 733,865, canc. Cl. 46.
Bayard Shirt Corp., New York, N.Y. 855,151, pub. 6–4–68. Cl. 39.
Bear Hybrid Corn Co., Inc. : *See*—
  Bear Hybrids Corn Co.
Bear Hybrids Corn Co., to Bear Hybrid Corn Co., Inc., Decatur, Ill. 503,710, ren. 8–20–68. Cl. 1.
Bear Mfg. Co., Rock Island, Ill. 855,303, pub. 6–4–68. Cl. 103.
Bell Records, Inc., New York, N.Y. 855,112–3, pub. 6–4–68. Cl. 36.
Bendicks (Mayfair) Ltd., Winchester, England. 855,171, pub. 6–4–68. Cl. 46.
Big Dutchman, Inc. : *See*—
  U.S. Industries, Inc.
Big West Oil Co. of Montana, d.b.a. Spokane House Motor Hotel, Spokane, Wash. 855,278, pub. 6–4–68. Cl. 100.
Bilhuber, E., Inc., New York, N.Y., to Knoll Pharmaceutical Co., Orange, N.J. 249,687, ren. 8–20–68. Cl. 18.
Billboard Publications, Inc., from The Billboard Publishing Co., Cincinnati, Ohio. 855,124, pub. 6–4–68. Cl. 38.
Billboard Publishing Co., The : *See*—
  Billboard Publications, Inc.
Birdwell Clothes : *See*—
  Mann, Carrie E.
Biscayne Tank Mfg. Co., Inc., Miami, Fla. 733,631, canc. Cl. 6.
Blue Gem Mfg. Co., Greensboro, N.C. 855,136, pub. 1–17–67. Cl. 39.

Blue Star Shoes, Inc., Lawrence, Mass. 855,144, pub. 6-4-68. Cl. 39.
Bo-Giro Products, Inc., Brightwaters, N.Y. 733,729, canc. Cl. 23.
Bomae, Buena Park, Calif. 855,073, pub. 6-4-68. Cl. 28.
Bonanza Macroni Co., Toronto, Ontario, Canada. 855,201, pub. 6-4-68. Cl. 46.
Bonat, Samuel, & Bro., Inc., West Paterson, N.J. 855,237, pub. 6-4-68. Cl. 51.
Borden Co., The: *See*—
  Mistletoe Creameries.
Borden Co., The, New York, N.Y. 439,707. Am. 7(d). Cl. 46.
Borden Co., The, New York, N.Y. 733,639, canc. Cl. 6.
Borden Co., The, New York, N.Y. 855,191, pub. 6-4-68. Cl. 46.
Borg-Warner Corp., from Borg-Warner Corp., Chicago, Ill. 855,095, pub. 2-13-68. Cl. 35.
Borg-Warner Corp., from Borg-Warner Corp., Chicago, Ill. 855,298, pub. 6-4-68. Cl. 103.
Borske Sklo Narodni Podnik, Novy Bor, Czechoslovakia. 854,972, pub. 6-4-68. Multiple Class (Classes 8 and 33).
Bradley, Milton, Co., Springfield, Mass. 855,041, pub. 6-4-68. Cl. 22.
Breck, John H., Inc., Wayne, N.J. 855,242, pub. 6-4-68. Cl. 51.
Brightwater Paper Co., Dover, Del., and Adams, Mass., to The Budd Co., Philadelphia, Pa. 501,002-3, ren. 8-20-68. Cl. 37.
Brightwater Paper Co., Dover, Del., and Adams, Mass., to The Budd Co., Philadelphia, Pa. 502,018, ren. 8-20-68. Cl. 37.
Bristol-Myers Co., New York, N.Y. 855,238, pub. 6-4-68. Cl. 51.
Bristol-Myers Co., New York, N.Y. 855,243-7, pub. 6-4-68. Cl. 51.
Brown, Geo. C., & Co., Memphis, Tenn., to George C. Brown & Co., Greensboro, N.C. 247,284, ren. 8-20-68. Cl. 6.
Brown Shoe Co., Inc., St. Louis, Mo. 854,945, pub. 6-4-68. Cl. 3.
Brunswick Corp., Chicago, Ill. 733,967, canc. Cl. 22.
Budd Co., The: *See*—
  Brightwater Paper Co.
Burger Brewing Co., The, Cincinnati, Ohio. 503,625, ren. 8-20-68. Cl. 48.
Burlington Industries, Inc., New York, N.Y. 855,156, pub. 6-4-68. Cl. 39.
Burlington Industries, Inc., New York, N.Y. 855,164, pub. 6-4-68. Cl. 42.
Burlington Industries, Inc., New York, N.Y. 855,166, pub. 6-4-68. Cl. 43.
Burnside Messenger Service, Inc., New York, N.Y. 733,955, canc. Cl. 105.
Byk-Gulden Lomberg Chemische Fabrik, G.m.b.H., Konstanz, Germany. 733,685-6, canc. Cl. 18.
C-E-I-R, Inc., Washington, D.C., from Automation Institute of America, Inc., San Francisco, Calif. 855,343. Cl. 107.
Calgon Corp., from Calgon Corp., Pittsburgh, Pa. 854,957, pub. 6-4-68. Cl. 6.
Cambridge Filter Corp.: *See*—
  Purex Corp., Ltd.
Camp Associates, Chicago, Ill. 855,114, pub. 6-4-68. Cl. 36.
Canada Packers Ltd., Toronto, Ontario, Canada. 855,192, pub. 6-4-68. Cl. 46.
Candygram, Inc., d.b.a. Perfume-By-Wire, Beverly Hills, Calif. 855,224, pub. 6-4-68. Cl. 51.
Cannon Mills Co., Kannapolis, N.C. 855,163, pub. 6-4-68. Cl. 42.
Canterbury Enterprises: *See*—
  Leighton, Joe, & Associates, Inc.
Canton Cotton Mills, to Canton Textile Mills, Inc., Canton, Ga. 503,463, ren. 8-20-68. Cl. 42.
Canton Textile Mills, Inc.: *See*—
  Canton Cotton Mills.
Car-Chek Diagnostic Systems, Inc., Omaha, Nebr. 855,301, pub. 6-4-68. Cl. 103.
Carnation Co., Los Angeles, Calif. 855,182, pub. 6-4-68. Cl. 46.
Carnation Co., Los Angeles, Calif. 855,193-5, pub. 6-4-68. Cl. 46.
Carolina Co., Inc., d.b.a. The Carolina Soap & Candle Makers, Southern Pines, N.C. 855,256, pub. 6-4-68. Cl. 52.
Carolina Soap & Candle Makers, The: *See*—
  Carolina Co., Inc.
Carriage Lane: *See*—
  Carson Pirie Scott & Co.
Carson Pirie Scott & Co., d.b.a. Carriage Lane, Chicago, Ill. 855,280, pub. 6-4-68. Cl. 101.
Carter Products, Inc., to Carter-Wallace, Inc., New York, N.Y. 500,657, ren. 8-20-68. Cl. 51.
Carter-Wallace, Inc.: *See*—
  Carter Products, Inc.
Carver, Eve, Fashions Corp.: *See*—
  Warshauer & Franck, Inc.
Cawy Bottling Co., Inc.: *See*—
  Diaz Raul.
Celanese Corp. of America: *See*—
  Celanese Corp.
Celanese Corp. of America, to Celanese Corp., New York, N.Y. 242,650, ren. 8-20-68. Cl. 42.
Chap Stick Co., Lynchburg, Va. 855,231, pub. 6-4-68. Cl. 51.
Chase Bag Co., New York, N.Y. 855,332. Cl. 38.
Chelten House Products Inc., Philadelphia, Pa. 855,183, pub. 6-4-68. Cl. 46.
Chem Sales Corp. (Bahamas) Ltd., Nassau, Bahamas. 854,984, pub 6-4-68. Cl. 12.
Chic-N-Krisp, Inc.: *See*—
  Ralston Purina Co.
Christie Bros. Fur Corp., The, New York, N.Y. 855,150, pub. 6-4-68. Cl. 39.
Cincinnati Shaper Co., The, Cincinnati, Ohio. 855,049, pub. 6-4-68. Cl. 23.
Clairol Inc., New York, N.Y. 855,252-4, pub. 6-4-68. Multiple Class (Classes 51 and 52).
Clearview Corp., Dallas, Tex. 854,979, pub. 6-4-68. Cl. 12.
Clover Farm Stores Corp.: *See*—
  Greene-Babcock Co., The.
Cloyd, Thomas H., Fort Jones, Calif. 855,316, pub. 6-4-68. Cl. 107.
Coleman Co., Inc., The, Wichita, Kans. 855,090, pub. 4-2-68. Cl. 34.
Colonial Plastics Mfg. Co., The, Cleveland, Ohio. 733,657, canc. Cl. 13.
Commercial Carpet Corp., New York, N.Y. 855,160, pub. 6-4-68. Cl. 42.
Commercial Solvents Corp., New York, N.Y. 854,958, pub. 6-4-68. Cl. 6.
Comptometer Corp.: *See*—
  Victor Comptometer Corp.
Concrete Masonry Corp., Elyria, Ohio. 854,985, pub. 6-4-68. Cl. 12.
Congress Sportswear Co., Inc., Boston, Mass. 733,838, canc. Cl. 39.
Contacts of Kansas, Inc., Wichita, Kans. 733,969, canc. Cl. 26.
Continental Air Lines, Inc., Los Angeles, Calif. 855,311, pub. 6-4-68. Cl. 105.
Continental Baking Co., Rye, N.Y. 855,340. Cl. 46.
Convertors Inc.: *See*—
  American Hospital Supply Corp.
Co-op Mailing Service: *See*—
  Ace Mailing Service, Inc.
Copley News Service: *See*—
  Copley Press, Inc., The.
Copley Press, Inc., The, d.b.a. Copley News Service, La Jolla, Calif. 855,272, pub. 6-4-68. Cl. 100.
Corn Cabin Co., South Elgin, Ill. 733,774, canc. Cl. 34.
Corrigan, J. P., d.b.a. Shyanne Co., Reno, Nev. 855,264, pub. 6-4-68. Cl. 52.
Cosom Corp., Minneapolis, Minn. 733,715, canc. Cl. 22.
Country Kitchen Inc. of Middletown, Ohio, Cincinnati, Ohio. 855,273, pub. 6-4-68. Cl. 100.
Craddock-Terry Shoe Corp., Lynchburg, Va. 502,795, ren. 8-20-68. Cl. 39.
Crescendoe Gloves, Inc., Johnstown, N.Y. 733,836, canc. Cl. 39.
Crest Brokerage Co., Los Angeles, Calif. 855,213, pub. 6-4-68. Cl. 46.
Crichton Chemical Co.: *See*—
  Koponen, Arthur.
Crown Rubber Co., Fremont, Ohio. 733,698, canc. Cl. 20.
Crystal Pure Candy Co., Chicago, Ill. 855,211, pub. 6-4-68. Cl. 46.
Curley Co., Inc.: *See*—
  American Ammone Co.
  American Products Co., The.
Curtiss-Wright Corp., Princeton, N.J. 733,739, canc. Cl. 26.
Custom Maid Brassiere Co., Philadelphia, Pa. 733,821, canc. Cl. 39.
D & S Labs., Inc., Newark, N.J. 733,674, canc. Cl. 18.
Davis, Elmer H., d.b.a. Tri-Pee Co., Columbus, Ohio. 854,943, pub. 6-4-68. Cl. 2.
Davis Paint Co.: *See*—
  New Method Paint Co.
Dayco Corp., Dayton, Ohio. 733,771, canc. Cl. 32.
Dehydag Deutsche Hydrierwerke G.m.b.H., Dusseldorf, Germany. 733,609-10, canc. Cl. 6.
Del Laboratories, Inc.: *See*—
  House of Tre-Jur, Inc.
Dell Publishing Co., Inc., New York, N.Y. 733,811, canc. Cl. 38.
Dell Publishing Co., Inc., New York, N.Y. 733,814, canc. Cl. 38.
Delmark Co., The: *See*—
  Dietene Co., The.
Dennison Mfg. Co., Framingham, Mass. 855,125, pub. 6-4-68. Cl. 38.
Denton, Marianna, d.b.a. The Whitmer Co., Bowling Green, Ky. 855,002, pub. 6-4-68. Cl. 18.
Diamond Shamrock Corp., Cleveland, Ohio. 854,967-8, pub. 6-4-68. Cl. 6.
Diaz, Raul, to Cawy Bottling Co., Inc., Miami, Fla. 818,053-4, new cert. Cl. 45.
Diaz, Raul, to Cawy Bottling Co., Inc., Miami, Fla. 832,611, new cert. Cl. 45.
Dietene Co., The, d.b.a. The Delmark Co., Minneapolis, Minn. 855,184, pub. 6-4-68. Cl. 46.
Dieterich Standard Corp., New Buffalo, Mich. 855,058, pub. 6-4-68. Cl. 26.
Dixie Valley Products: *See*—
  Southern Utah Winery.
Dolge, C. B., Co., The, Westport, Conn. 239,568, ren. 8-20-68. Cl. 6.
Dollfus-Mieg & Cie, Societe Anonyme, Mulhouse, Germany, to Dollfus-Mieg & Cie, Societe Anonyme, Paris (Seine), France. 70,827, ren. 8-20-68. Cl. 43.
Don's Marine Center: *See*—
  Wollard, Donald L.
Dougherty's, J. A., Sons, Inc., Distillers, Philadelphia, Pa. 733,909, canc. Cl. 49.
Dreher Leather Mfg. Corp., New York, N.Y. 733,603, canc. Cl. 1.
Duffy-Mott Co., Inc., New York, N.Y. 855,208, pub. 6-4-68. Cl. 46.
Durney, Inc.: *See*—
  Griffith-Durney Co.
Dynamics Corp. of America: *See*—
  Hoffman, Reeves, Corp.

ENR Technitape Network: *See*—
  Reed, Jerome G.
Eagle Pencil Co., New York, N.Y., to Eagle Pencil Co., Danbury, Conn. 69,625, ren. 8-20-68. Cl. 37.
Earl of Hardwicke, Ltd., The, New York, N.Y. 855,078-81, pub. 6-4-68. Cl. 28.
East House Enterprises, Inc., New York, N.Y. 854,960, pub. 6-4-68. Cl. 7.
Eberhard Faber Inc., Wilkes-Barre, Pa. 855,119, pub. 6-4-68. Multiple Class (Classes 37 and 52).
Ehrenreich Photo-Optical Industries, Inc., Garden City, N.Y. 855,115, pub. 6-4-68. Cl. 36.
Elkes Biscuits Ltd., Uttoxeter, England. 855,206, pub. 6-4-68. Cl. 46.
Ellyda Imports, Inc., New York, N.Y. 733,864, canc. Cl. 46.
Empacadora Del Caribe, Inc., San Juan, Puerto Rico. 855,186, pub. 6-4-68. Cl. 46.
Employee Communications Service, Inc., New York, N.Y. 855,284, pub. 6-4-68. Cl. 101.
Endicott Johnson Corp., Endicott, N.Y. 855,148, pub. 6-4-68. Cl. 39.
Engelhorn, John, & Sons, d.b.a. Engelhorn Packing Co., Newark, N.J. 733,848, canc. Cl. 46.
Engelhorn Packing Co.: *See*—
  Engelhorn, John, & Sons.
Engineered Plastics Inc., Gibsonville, N.C. 854,925-26, pub. 6-4-68. Multiple Class (Classes 1, 23, and 38).
Ennis, Barry, Wayne, N.J. 855,317, pub. 6-4-68. Cl. 107.
Eston Chemicals, Inc., to American Potash & Chemical Corp., Los Angeles, Calif. 500,914, ren. 8-20-68. Cl. 6.
Eureka Fire Hose Co., to Uniroyal, Inc., New York, N.Y. 32,058, ren. 8-20-68. Cl. 35.
Eutectic Welding Alloys Corp., Flushing, N.Y. 855,091, pub. 6-4-68. Cl. 34.
Everlast World's Boxing Headquarters Corp., New York, N.Y. 855,036, pub. 6-4-68. Cl. 22.
Faberge, Inc., New York, N.Y. 733,982, canc. Cl. 51.
Faesy & Besthoff, Inc., Edgewater, N.J. 419,470, canc. Cl. 6.
Fairchild Advertising, Inc., to Fairchild Publications, Inc., New York, N.Y. 435,416, ren. 8-20-68. Cl. 38.
Fairchild Publications, Inc.: *See*—
  Fairchild Advertising, Inc.
Faster-Form Corp., New Hartford, N.Y. 855,219, pub. 6-4-68. Cl. 50.
Felch, Jerald L., Huntsville, Ala. 733,706, canc. Cl. 21.
Fernandez, Antonio: *See*—
  New Pines, Inc., The.
Financial Industrial Income Fund, Inc.: *See*—
  Financial Programs, Inc.
Financial Programs, Inc., Denver, Colo. 855,290, pub. 6-4-68. Cl. 102.
Financial Programs, Inc., from Financial Industrial Income Fund, Inc., Denver, Colo. 855,291-2, pub. 6-4-68. Cl. 102.
Firestone Tire & Rubber Co., The, Akron, Ohio. 733,784, canc. Cl. 35.
First National Bank of Huntsville, Ala., Huntsville, Ala. 855,296, pub. 6-4-68. Cl. 102.
Firth Sterling Corp., from Firth Sterling Inc., Pittsburgh, Pa. 854,974, pub. 6-4-68. Multiple Class (Classes 9, 21, and 23).
Firth Sterling Inc.: *See*—
  Firth Sterling Corp.
Flintkote Co., The, New York, N.Y. 854,927, pub. 6-4-68. Cl. 1.
Fogarty, Anne, Inc., New York, N.Y. 855,153, pub. 6-4-68. Cl. 39.
Fonseca, Carmelo, d.b.a. Fonseca Record Co., New York, N.Y. 855,331. Cl. 36.
Fonseca Record Co.: *See*—
  Fonseca, Carmelo.
Formaid Co., Boston, Mass. 855,141, pub. 6-4-68. Cl. 39.
Fountain Industries, Inc., Albert Lea, Minn. 855,190, pub. 6-4-68. Cl. 46.
Frederick, Purdue, Co., The, Yonkers, N.Y. 855,010, pub. 6-4-68. Cl. 18.
Freeman Industrial Enterprises Corp., New York, N.Y. 855,077, pub. 6-4-68. Cl. 28.
Frito-Lay, Inc., Dallas, Tex. 855,202, pub. 6-4-68. Cl. 46.
Frozen Food Forum, Inc., The, Atlanta, Ga. 855,336. Cl. 46.
Futura Mfg. Co., St. Louis, Mo. 733,785, canc. Cl. 36.
Garber's Travel Service, Inc., Brookline, Mass. 733,954, canc. Cl. 105.
Garland Mfg. Co., Saco, Maine. 854,929, pub. 6-4-68. Cl. 1.
Garrett-Hewitt International, Inc., Redwood City, Calif. 855,325. Cl. 2.
Geigy Chemical Corp., Ardsley, N.Y. 854,962, pub. 6-4-68. Cl. 6.
General Aniline & Film Corp., New York, N.Y. 854,959, pub. 6-4-68. Cl. 6.
General Church of The New Jerusalem Association, The, Bryn Athyn, Pa. 855,322, pub. 6-4-68. Cl. 200.
General Controls Co., Glendale, Calif. 733,748, canc. Cl. 26.
General Foods Corp., White Plains, N.Y. 733,873, canc. Cl. 46.
General Foods Corp., White Plains, N.Y. 855,176, pub. 6-4-68. Cl. 46.
General Industries Corp., Salt Lake City, Utah. 855,175, pub. 6-4-68. Cl. 46.
General Tire & Rubber Co., The, Akron, Ohio. 855,100, pub. 6-4-68. Cl. 35.
General-Direktion Der Osterr. Tabakregie, to Austria Tabakwerke Aktiengesellschaft vorm Oesterreichische Tabakregie, Vienna, Austria. 248,129, ren. 8-20-68. Cl. 17.
Genesco Inc.: *See*—
  Jarman Shoe Co.
Genesco Inc., Nashville, Tenn. 733,826, canc. Cl. 39.
Georgia-Pacific Corp., Portland, Oreg. 854,981, pub. 6-4-68. Cl. 12.
Giant Wash, Inc., Wichita, Kans. 733,941, canc. Cl. 101.
Gilman Bros. Co., The, Gilman, Conn. 854,934, pub. 6-4-68. Cl. 1.
Glenmore Distilleries Co., Louisville, Ky. 502,859, ren. 8-20-68. Cl. 49.
Godman, H. C., Co., The: *See*—
  Godman Shoe Co.
Godman Shoe Co., from The H. C. Godman Co., Columbus, Ohio. 733,822, canc. Cl. 39.
Gold Medal Products Co., Cincinnati, Ohio. 854,939, pub. 6-4-68. Multiple Class (Classes 2, 21, 23, 26, 32, 34, 45, 46, and 52).
Golden Shore Seafoods, Inc., Brunswick, Ga. 855,209, pub. 6-4-68. Cl. 46.
Gold-Master Corp., New York, N.Y. 855,074, pub. 6-4-68. Cl. 28.
Good, A. H., Corp., Summit, N.J. 855,260, pub. 6-4-68. Cl. 52.
Goodrich, B. F., Co., The, Akron, Ohio. 733,712, canc. Cl. 22.
Goodrich, B. F., Co., The, Akron, Ohio. 855,099, pub. 6-4-68. Cl. 35.
Goodyear Tire & Rubber Co., The, Akron, Ohio. 855,101, pub. 6-4-68. Cl. 35.
Gordax Corp. of America, New York, N.Y. 855,162, pub. 6-4-68. Cl. 42.
Graham, Anne K., Jacksonville, N.C. 855,330. Cl. 28.
Gramophone Co. Ltd., The, Hayes, Middlesex, England. 855,109, pub. 6-4-68. Cl. 36.
Grand Union Co., The, East Paterson, N.J. 855,169, pub. 6-4-68. Cl. 45.
Greene-Babcock Co., The, to Grocers-Producers Co., to Clover Farm Stores Corp., Cleveland, Ohio. 248,203, ren. 8-20-68. Cl. 46.
Grey Hosiery Mills, d.b.a. Mary Grey Hosiery Mills, Bristol, Va. 855,152, pub. 6-4-68. Cl. 39.
Grey, Mary, Hosiery Mills: *See*—
  Grey Hosiery Mills.
Griffith-Durner Co., San Francisco, to Durney, Inc., Los Angeles, Calif. 68,978, ren. 8-20-68. Cl. 46.
Griffith-Durney Co., San Francisco, to Durney, Inc., Los Angeles, Calif. 242,563, ren. 8-20-68. Cl. 46.
Grinnell Co., Inc., to Grinnell Corp., Providence, R.I. 243,479, ren. 8-20-68. Cl. 13.
Grinnell Corp.: *See*—
  Grinnell Co., Inc.
Gulf Oil Corp., Pittsburgh, Pa. 855,262-3, pub. 6-4-68. Cl. 52.
Habasit, Ltd., Reinach-Basel, Switzerland. 855,096-7, pub. 6-4-68. Cl. 35.
Haberman Inc., Cincinnati, Ohio. 733,766, canc. Cl. 28.
Hagan Chemicals & Controls, Inc., Pittsburgh, Pa. 733,935, canc. Cl. 52.
Hall, Janet L., d.b.a. House of Ideas, Naperville, Ill. 855,038, pub. 6-4-68. Cl. 22.
Hall Syndicate, Inc., The, New York, N.Y. 733,710, canc. Cl. 22.
Hallemite Mfg. Co., The, Cleveland, Ohio, to Sterling Drug Inc., New York, N.Y. 439,016, ren. 8-20-68. Cl. 12.
Hangsterfer's Laboratories, Inc., Mantua, N.J. 854,994, pub. 6-4-68. Cl. 15.
Hanser Products Co.: *See*—
  Hanser, Robert S.
Hanser, Robert S., d.b.a. Hanser Products Co., Saddle River, N.J. 855,093, pub. 6-4-68. Cl. 35.
Harrison, Cosby P., to Trade-A-Plane, Crossville, Tenn. 542,927, new cert. Cl. 38.
Harrison, Cosby P., to Trade-A-Plane, Crossville, Tenn. 545,694, new cert. Cl. 38.
Hartley, Arthur W. M., d.b.a. Hartley & Co., Shrewsbury, England. 434,836, ren. 8-20-68. Cl. 21.
Hartley & Co.: *See*—
  Hartley, Arthur W. M.
Harvest Brand, Inc., Pittsburg, Kans. 855,200, pub. 6-4-68. Cl. 46.
Hat Corp. of America: *See*—
  Knox Hat Co., Inc.
Hat Corp. of America, Norwalk, Conn. 733,834, canc. Cl. 39.
Healy, Thomas A., Brooklyn, N.Y. 733,743, canc. Cl. 26.
Heintz-Malatesta-Martini: *See*—
  Arden-Mayfair, Inc.
Heller, Peter V. N., San Clemente, Calif. 855,046, pub. 6-4-68. Cl. 23.
Henry a la Pensee, Inc., New York, N.Y. 855,146, pub. 6-4-68. Cl. 39.
Herger, Bernardo, Rio Piedras, Puerto Rico. 855,103, pub. 6-4-68. Cl. 36.
Herger, Bernardo, Rio Piedras, Puerto Rico. 855,106, pub. 6-4-68. Cl. 36.
Heritage Land Sales, Inc., Miami, Fla. 855,287, pub. 6-4-68. Cl. 101.
Heritage Tours, Inc., New York, N.Y. 855,309, pub. 6-4-68. Cl. 105.
Hershkowitz, J., Inc., d.b.a. P.M.C., Brooklyn, N.Y. 854,965, pub. 6-4-68. Cl. 6.
Hickok Mfg. Co., Inc.: *See*—
  Pioneer Suspender Co.
Hill, George W., & Co.: *See*—
  McCullough's, J. M., Sons Co., The.
Hilton Hotels Corp., Chicago, Ill. 855,277, pub. 6-4-68. Cl. 100.
Hoeganaes Corp., New York, N.Y. 855,126, pub. 6-4-68. Cl. 38.
Hoffman, Reeves, Corp., Carlisle, Pa., to Dynamics Corp. of America, New York, N.Y. 438,088, ren. 8-20-68. Cl. 21.
Hood, H. P., & Sons, Inc., d.b.a. Southern Sun Growers, Boston, Mass. 855,197 pub. 6-4-68. Cl. 46.

Hoofs and Horns Publishing Co., Inc., Denver, Colo. 503,250, ren. 8-20-68. Cl. 38.
House of Berland, Inc., New York, N.Y. 855,076, pub. 2-20-68. Cl. 28.
House of Ideas: *See—*
  Hall, Janet L.
House of Negatives: *See—*
  Nassar, Frederick.
House of Tre-Jur, Inc., New York, to Del Laboratories, Inc., Farmingdale, N.Y. 250,076, ren. 8-20-68. Cl. 29.
House of Vision, Inc., The, Chicago, Ill. 855,068, pub. 6-4-68. Cl. 26.
Hulkower, Benjamin, and Seymour Kushner, Brooklyn, N.Y. 855,321, pub. 6-4-68. Cl. 107.
Hy-Cal Engineering, Santa Fe Springs, Calif. 855,329. Cl. 26.
Industrial Inventions, Inc., Monmouth Junction, N.J. 855,060, pub. 6-4-68. Cl. 26.
Inexco S.A., Fribourg, Switzerland. 855,233, pub. 6-4-68. Cl. 51.
Information Sciences Associates: *See—*
  Kranzley, Arthur S., & Co., Inc.
Ingersoll Inc., Rockford, Ill. 855,275, pub. 6-4-68. Cl. 100.
Ingersoll-Rand Co., New York, N.Y. 855,045, pub. 6-4-68. Cl. 23.
Inland Steel Co., Chicago, Ill. 502,440, ren. 8-20-68. Cl. 14.
Inland Steel Co., Chicago, Ill. 503,341, ren. 8-20-68. Cl. 12.
Inplant Publishing Corp., New York, N.Y. 733,802, canc. Cl. 38.
Instant Foods Corp., Brooklyn, N.Y. 733,880, canc. Cl. 46.
Insurance Co. of North America, Philadelphia, Pa. 855,294-5, pub. 6-4-68. Cl. 102.
Insurance Co. of North America, Philadelphia, Pa. 855,297, pub. 6-4-68. Cl. 102.
Interchemical Corp., New York, N.Y. 733,621, canc. Cl. 6.
International Hydrographic Services, Inc., Silver Spring, Md. 855,299, pub. 6-4-68. Cl. 103.
International Silver Co., The, Meriden, Conn. 503,134, ren. 8-20-68. Cl. 28.
Interstyle AG: *See—*
  Quality Dress Marketing AG.
Irwin, Neisler, & Co., Decatur, Ill. 733,801, canc. Cl. 38.
J.D. Packing Co.: *See—*
  Universal Packers Corp.
Jackson & Perkins Co., Medford, Oreg. 855,323. Cl. 1.
Jadow, B., Inc., to B. Jadow & Sons, Inc., New York, N.Y. 439,393, ren. 8-20-68. Cl. 23.
Jadow, B., & Sons, Inc.: *See—*
  Jadow, B., Inc.
James, H. A., to Texite, Inc., New York, N.Y. 440,131, ren. 8-20-68. Cl. 39.
Jarman Shoe Co., to Genesco Inc., Nashville, Tenn. 240,239, ren. 8-20-68. Cl. 39.
Jeffcock, John P., Surrey, England. 855,185, pub. 6-4-68. Cl. 46.
Jennison-Wright Corp., The, Toledo, Ohio. 502,618, ren. 8-20-68. Cl. 12.
John-Wilmer Co., Inc., The, Atlanta, Ga. 855,027, pub. 6-4-68. Cl. 21.
Joseph Associates, Evanston, Ill. 855,135, pub. 6-14-66. Cl. 39.
Joseph & Feiss Co., The, Cleveland, Ohio. 855,122, pub. 6-4-68. Cl. 38.
Kabushiki Kaisha Kurosawa Shoten, d.b.a. Kurosawa & Co., Ltd., Tokyo-to, Japan. 733,700, canc. Cl. 21.
Kellogg Co., Battle Creek, Mich. 733,904, canc. Cl. 46.
Kendall Co., The, Walpole, Mass. 855,147, pub. 6-4-68. Cl. 39.
Kennedy, Peter, Inc., Seattle, Wash. 855,034, pub. 6-4-68. Cl. 22.
King of Queens Insurance Agency, The: *See—*
  Parker, Charles W.
Knoll Pharmaceutical Co.: *See—*
  Bilhuber, E., Inc.
Knox Hat Co., Inc., to Hat Corp. of America, New York, N.Y. 246,280, ren. 8-20-68. Cl. 39.
Kobi Polyethylene Bag Mfg. Co. Inc., Brooklyn, N.Y. 854,935, pub. 6-4-68. Multiple Class (Classes 1, 2, and 37).
Koehring Co., Milwaukee, Wis., from Master Consolidated Inc., Dayton, Ohio. 855,087, pub. 6-4-68. Cl. 34.
Koponen, Arthur, d.b.a. Crichton Chemical Co., South Salem, N.Y. 855,001, pub. 6-4-68. Cl. 18.
Koppers Co., Inc., Pittsburgh, Pa. 854,954, pub. 6-4-68. Cl. 6.
Kramer Des.: *See—*
  Kramer, Robert A.
Kramer, Robert A., d.b.a. Kramer Des., Birmingham, Mich. 855,043, pub. 6-4-68. Cl. 22.
Kranzley, Arthur S., and Co., Inc., d.b.a. Information Sciences Associates, Cherry Hill, N.J. 855,289, pub. 6-4-68. Cl. 101.
Kreisler, Jacques, Mfg. Corp., North Bergen, N.J. 733,762, canc. Cl. 28.
Kreiss, Jack, Hosiery, Inc.: *See—*
  National Department Stores Inc.
Kuhlmann, Ugine, Paris, France. 854,952, pub. 6-4-68. Cl. 6.
Kurosawa & Co., Ltd.: *See—*
  Kabushiki Kaisha Kurosawa Shoten.
Lacnutrients, Inc., Hillside, N.J. 855,210, pub. 6-4-68. Cl. 46.
Lake Chemical Co., Chicago, Ill. 854,982, pub. 6-4-68. Cl. 12.
Lane Ltd., New York, N.Y. 854,996-9, pub. 6-4-68. Cl. 17.
Lanvin-Charles of the Ritz, Inc., New York, N.Y. 855,232, pub. 6-4-68. Cl. 51.
Laverne International, Ltd., New York, N.Y. 854,970, pub. 6-4-68. Multiple Class (Classes 8, 20, 37, 50, and 100).
Lazier, J. F., Mfg. Co., St. Louis, Mo. 244,252, ren. 8-20-68. Cl. 45.
Lazier, J. F., Mfg. Co., St. Louis, Mo. 245,850, ren. 8-20-68. Cl. 45.
Lee, Smith, San Clemente, Calif. 438,636, ren. 8-20-68. Cl. 26.
Lee, Smith, San Clemente, Calif. 438,861, ren. 8-20-68. Cl. 26.
Lehigh Portland Cement Co., Allentown, Pa. 500,827, ren. 8-20-68. Cl. 12.
Leighton, Joe, & Associates, Inc., d.b.a. Canterbury Enterprises, Los Angeles, Calif. 854,990, pub. 6-4-68. Cl. 13.
Leonard, Henry, & Thomas, Inc.: *See—*
  Linkman, M., & Co.
Lerman, Adolph, d.b.a. Minart Co., New York, N.Y. 854,944, pub. 6-4-68. Multiple Class (Classes 3 and 39).
Lesjofors Aktiebolag, Lesjofors, Sweden. 854,980, pub. 6-4-68. Cl. 12.
Levin, Arthur M., Roanoke, Va. 733,721, canc. Cl. 22.
Like Me Products Co., Millard, Nebr. 855,261, pub. 6-4-68. Cl. 52.
Lil' Duffer of America, Inc., Topeka, Kans. 855,276, pub. 6-4-68. Cl. 100.
"Linda" Co., The, to G. K. Andrews, d.b.a. The "Linda" Co., Los Angeles, Calif. 502,861, ren. 8-20-68. Cl. 39.
Linkman, M., & Co., Chicago, Ill., to Henry Leonard & Thomas, Inc., Greensboro, N.C. 501,458, ren. 8-20-68. Cl. 8.
Litton Precision Products, Inc., Beverly Hills, Calif. 855,025, pub. 6-4-68. Cl. 21.
Litton Systems, Inc., Beverly Hills, Calif. 733,746, canc. Cl. 26.
Los Pinos Nuevos: *See—*
  New Pines, Inc., The.
Lucht, John C., New York, N.Y. 855,281, pub. 6-4-68. Cl. 101.
M.J. Co. Inc., Wynnewood, Pa. 854 949, pub. 6-4-68. Cl. 6.
M.T. & D. Co., Cleveland, Ohio. 733 718, canc. Cl. 22.
Macbeth Corp., Newburgh, N.Y. 855,062, pub. 6-4-68. Cl. 26.
Macy, R. H., & Co., Inc., New York, N.Y. 243,919, ren. 8-20-68. Cl. 46.
Magazine Management Co., New York, N.Y. 855,130, pub. 6-4-68. Cl. 38.
Maidenform, Inc., New York, N.Y. 855,157, pub. 6-4-68. Cl. 39.
Malleable Iron Range Co., Beaver Dam, Wis. 855,092, pub. 6-4-68. Cl. 34.
Mallon Chemical Corp.: *See—*
  American Home Products.
Manette, Inc., Minneapolis, Minn. 855,285, pub. 6-4-68. Cl. 101.
Manganese Bronze & Brass Co. Ltd., The, to Manganese Bronze Ltd., London, England. 69,043, ren. 8-20-68. Cl. 14.
Manganese Bronze & Brass Co. Ltd., The, to Manganese Bronze Ltd., London, England. 69,067, ren. 8-20-68. Cl. 14.
Manganese Bronze Ltd.: *See—*
  Manganese Bronze & Brass Co. Ltd., The.
Mann, Bart W., San Angelo, Tex. 855,075, pub. 6-4-68. Cl. 28.
Mann, Carrie E., d.b.a. Birdwell Clothes, Santa Ana, Calif. 855,137, pub 6-4-68. Cl. 39.
Mann, James F., d.b.a. Tork Lift Sales & Mfg. Co., Tacoma, Wash. 855,018, pub. 6-4-68. Cl. 19.
Marine Services Unlimited, Downey, Calif. 855,019, pub. 6-4-68. Cl. 19.
Martin Electronics Mfg. Corp.: *See—*
  World-Wide Enterprises Ltd.
Martin, Ray, Enterprises: *See—*
  Martin, Raymond I.
Martin, Raymond I., d.b.a. Ray Martin Enterprises, Niles, Mich. 733 744, canc. Cl. 26.
Martinoni, E.: *See—*
  Williams, Norman, Co.
Massengill, S. E., Co., The, Bristol, Tenn. 855,007, pub. 6-4-68. Cl. 18.
Master Consolidated Inc.: *See—*
  Koehring Co.
Matsushita Electric Industrial Co., Ltd., Osaka Prefecture, Japan. 855,032, pub. 6-4-68. Multiple Class (Classes 21, 26, and 36).
Mattel, Inc., Hawthorne, Calif. 855 215, pub. 6-4-68. Cl. 46.
Maximent Corp., The, Cincinnati, Ohio. 854,955, pub. 6-4-68. Cl. 6.
Mayer, Oscar, & Co., Inc., Chicago, Ill. 855,338. Cl. 46.
McCullough's, J. M., Sons Co., The, Cincinnati, Ohio, to George W. Hill & Co., Covington, Ky. 250,177, ren. 8-20-68. Cl. 1.
McDaniel, Zeb E., Plant City, Fla. 733,850, canc. Cl. 46.
McGraw-Hill, Inc., New York, N.Y. 855,132, pub. 6-4-68. Cl. 38.
McKay Machine Co., The, from The McKay Machine Co., Youngstown, Ohio. 855,048, pub. 6-4-68. Cl. 23.
McNeil Laboratories, Inc., Fort Washington, Pa. 855,006, pub. 6-4-68. Cl. 18.
Mead Johnson & Co., to Mead Johnson & Co., Evansville, Ind. 502,608, ren. 8-20-68. Cl. 46.
Mead Johnson & Co.: *See—*
  Wyeth Inc.
Mead Johnson & Co., to Mead Johnson & Co., Evansville, Ind. 503,231, ren. 8-20-68. Cl. 18.
Meadow, Joseph J., Jr., d.b.a. Scenic Sound, Lookout Mountain, Tenn. 855,107, pub. 6-4-68. Cl. 36.
Meat Industry Suppliers, Inc., Northfield, Ill. 855,173, pub. 6-4-68. Cl. 46.
Memorie Foods: *See—*
  Venus Foods.
Mennen Co., The, Morristown, N.J. 855,229, pub. 6-4-68. Cl. 51.
Mennen Co., The, Morristown, N.J. 855,250-1, pub. 6-4-68. Cl. 51.
Mennen Co., The, Morristown, N.J. 855,258, pub. 6-4-68. Cl. 52.
Mercer Hand Soap Co., Princeton, W. Va. 733,938, canc. Cl. 52.
Merck & Co., Inc.: *See—*
  Sharp & Dohme, Inc.
Merck & Co., Inc., Rahway, N.J. 854,960, pub. 6-4-68. Cl. 6.

Merck & Co., Inc., Rahway, N.J. 855,012, pub. 6-4-68. Cl. 18.
Metro Pictures Corp., from Metro-Goldwyn-Mayer Inc., New York, N.Y. 153,798, canc. Cl. 26.
Metro-Goldwyn-Mayer Inc.: *See—*
  Metro Pictures Corp.
Miami Dolphins, Ltd., Miami, Fla. 855,315, pub. 6-4-68. Cl. 107.
Miami Products, Inc., Miami, Okla. 855,020, pub. 6-4-68. Cl. 19.
Mickelson Gallery: *See—*
  Mickelson Inc.
Mickelson Inc., d.b.a. Mickelson Gallery, Washington, D.C. 855,123, pub. 6-4-68. Multiple Class (Classes 38, 50, and 101).
Midas, Inc., Chicago, Ill. 855,053-4, pub. 6-4-68. Cl. 23.
Middle State Mfg. Co., Inc., Columbus, Nebr. 855,088, pub. 6-4-68. Cl. 34.
Mid-West Abrasive Co., Owosso, Mich. 408,868, canc. Cl. 4.
Milwaukee Bar Association, Milwaukee, Wis. 855,268, pub. 6-4-68. Cl. 100.
Minart Co.: *See—*
  Lerman, Adolph.
Miracle Spring Lift Co., Memphis, Tenn. 855,017, pub. 6-4-68. Cl. 19.
Miraco Mfg., Inc., Minneapolis, Minn. 855,266, pub. 6-4-68. Cl. 52.
Mission Valley Mills, Inc.: *See—*
  New Braunfels Textile Mills.
Mistletoe Creameries, Fort Worth, Tex., to The Borden Co., New York, N.Y. 244,433, ren. 8-20-68. Cl. 46.
Mitchell, Clifford F., Garland, Tex. 855,084, pub. 6-4-68. Cl. 31.
Mitsui & Co., Ltd., Tokyo, Japan. 733,696, canc. Cl. 19.
Moccomaat N.V., De Meern, Netherlands. 855,170, pub. 6-4-68. Cl. 46.
Modern Globe, Inc., Pawtucket, R.I. 855,155, pub. 6-4-68. Cl. 39.
Monarch Press, Inc., to Simon & Schuster, Inc., New York, N.Y. 780,643, new cert. Cl. 38.
Monsanto Co., St. Louis, Mo. 846,624, cor. Multiple Class (Classes 21, 26, and 27).
Montgomery Ward & Co., Inc., Chicago, Ill. 733,840, canc. Cl. 42.
Montres Nova Biedermann Freres S.A., La Neuveville, Switzerland. 439,712, ren. 8-20-68. Cl. 27.
Morrill, Harry L., Jr., Marietta, Ga. 733,968, canc. Cl. 22.
Motel Management, Inc., Detroit, Mich. 855,286, pub. 6-4-68. Cl. 101.
Motorola, Inc., Franklin Park, Ill. 855,070, pub. 6-4-68. Cl. 26.
Munchhausen Soundproofing Co., Inc., New York, N.Y. 854,983, pub. 6-4-68. Cl. 12.
Murad, Jerry: *See—*
  Muradian, Jerry.
Muradian Jerry, d.b.a. Jerry Murad, Norridge, Ill. 733,958, canc. Cl. 107.
Mutual Orange Distributors, to Pure Gold, Inc., Redlands, Calif. 503,623, ren. 8-20-68. Cl. 46.
N.V. Export-Centrale "Boxtel," Boxtel, Holland. 733,881, canc. Cl. 46.
N.V. Wallramit Hardmetaal Maatschappij, Maassluis, Netherlands. 733,661, canc. Cl. 14.
Nassar, Frederick, d.b.a. House of Negatives, Tampa, Fla. 733,975, canc. Cl. 37.
Nassau Smelting & Refining Co., Inc., Staten Island, N.Y. 439,698, ren. 8-20-68. Cl. 14.
National Bakers Service Inc., Chicago, Ill. 733,863, canc. Cl. 46.
National Department Stores Inc., to Jack Kreiss Hosiery, Inc., New York, N.Y. 249,574, ren. 8-20-68. Cl. 39.
National Electric Welding Machines Co., Bay City, Mich. 503,178, ren. 8-20-68. Cl. 34.
National Food Industries, Inc., Miami, Fla. 855,205, pub. 6-4-68. Cl. 46.
National Lock Co., Rockford, Ill. 855,055, pub. 6-4-68. Cl. 25.
National Merchandising Corp., Wellesley Hills, Mass. 733,942, canc. Cl. 101.
National Nugrape Co., Atlanta, Ga. 855,335. Cl. 45.
National Starch & Chemical Corp., New York, N.Y. 855,337. Cl. 46.
Nethercutt Laboratories, d.b.a. Cosgenic Labs., Los Angeles, Calif. 774,749, cor. Cl. 51.
New Braunfels Textile Mills, to Mission Valley Mills, Inc., New Braunfels, Tex. 501,648, ren. 8-20-68. Cl. 42.
New Method Paint Co., to Davis Paint Co., Kansas City, Mo. 441,558, ren. 8-20-68. Cl. 16.
New Pines, Inc., The, from A. Fernandez, d.b.a. Los Pinos Nuevos, Miami, Fla. 855,181, pub. 6-4-68. Cl. 46.
New York Herald Tribune Inc., New York, N.Y. 733,819, canc. Cl. 38.
Newly Weds Baking Co., Chicago, Ill. 855,180, pub. 6-4-68. Cl. 46.
Niggi, A., & C., S.N.C., Imperia, Italy. 855,230, pub. 6-4-68. Cl. 51.
North Pacific Canners & Packers, Inc., Portland, Oreg. 855,177, pub. 6-4-68. Cl. 46.
Northern Straw Works: *See—*
  Northern Straw Works, Inc.
Northern Straw Works, Inc., from Northern Straw Works, Philadelphia, Pa. 394,449, canc. Cl. 39.
Nosts, The, Pittsford, N.Y. 733,959, canc. Cl. 200.
Nu-Way Mfg. Co., Inc., Barnard, Kans. 855,016, pub. 4-9-68. Cl. 19.
Nyko, Inc., Chicago, Ill. 500,798, ren. 8-20-68. Cl. 2.
Oakite Products, Inc., Berkeley Heights, N.J. 249,419, ren. 8-20-68. Cl. 52.
Oconomowoc Canning Co., Oconomowoc, Wis. 249,772, ren. 8-20-68. Cl. 46.
Optical Publishing Co., Inc., The, Pittsfield, Mass. 855,129, pub. 6-4-68. Cl. 38.
Optometics, Inc., Santa Ana, Calif. 855,265, pub. 6-4-68. Cl. 52.
Osborn, T. L., Evangelistic Association, Inc., Tulsa, Okla. 733,809, canc. Cl. 38.
P.M.C.: *See—*
  Hershkowitz, J., Inc.
Page Milk Co., Merrill, Wis., to The Page Milk Co., Tulsa, Okla. 249,958, ren. 8-20-68. Cl. 46.
Page Milk Co., The: *See—*
  Page Milk Co.
Palicio, F., & Co., Inc., d.b.a. F. Palicio, Inc., New York, N.Y. 855,000, pub. 6-4-68. Cl. 17.
Palicio, F., Inc.: *See—*
  Palicio, F., & Co., Inc.
Palmedico, Inc., Columbia, S.C. 855,004-5, pub. 6-4-68. Cl. 18.
Palmini Engineering Corp., South San Gabriel, Calif. 733,605, canc. Cl. 2.
Palomino & Vergara, Cadiz, Spain. 855,217, pub. 6-4-68. Cl. 47.
Paris Processing Corp., New York, N.Y. 855,314, pub. 6-4-68. Cl. 106.
Parker, Charles W., d.b.a. The King of Queens Insurance Agency, Jackson Heights, N.Y. 855,293, pub. 6-4-68. Cl. 102.
Patchen, Lee H., Spokane, Wash. 733,647, canc. Cl. 12.
Peabody Coal Co., St. Louis, Mo. 854,930-3, pub. 6-4-68. Cl. 1.
Pear & Partridge, Inc., Lansing, Mich. 855,274, pub. 6-4-68. Cl. 100.
Peebles, W. S., & Co., Inc., Lawrenceville, Va. 855,149, pub. 6-4-68. Cl. 39.
Pendleton Tool Industries, Inc., Los Angeles, Calif. 855,023, pub. 6-4-68. Cl. 21.
Pennsalt Chemicals Corp.: *See—*
  Sharples Solvents Corp., The.
Pennsylvania Dutch Candles: *See—*
  Pennsylvania Dutch Co., Inc.
Pennsylvania Dutch Co.: *See—*
  Pennsylvania Dutch Co., Inc.
Pennsylvania Dutch Co., Inc., d.b.a. Pennsylvania Dutch Co., Pennsylvania Dutch Foods, and Pennsylvania Dutch Candles, Mt. Holly Springs, Pa. 855,189, pub. 6-4-68. Cl. 46.
Pennsylvania Dutch Foods: *See—*
  Pennsylvania Dutch Co., Inc.
Perfume-By-Wire: *See—*
  Candygram, Inc.
Petroleum Engineer Publishing Co., The, Dallas, Tex. 855,131, pub. 6-4-68. Cl. 38.
Pfister & Vogel Leather Co., to Pfister & Vogel Tanning Co., Inc., Milwaukee, Wis. 69,576-7, ren. 8-20-68. Cl. 1.
Pfister & Vogel Tanning Co., Inc.: *See—*
  Pfister & Vogel Leather Co.
Pfizer, Chas., & Co., Inc., New York, N.Y. 854,966, pub. 6-4-68. Cl. 6.
Pfizer, Chas., & Co., Inc., New York, N.Y. 855,227, pub. 6-4-68. Cl. 51.
Pfizer, Chas., & Co., Inc., New York, N.Y. 855,257, pub. 6-4-68. Cl. 52.
Photosol Corp., Buffalo, N.Y. 855,057, pub. 6-4-68. Cl. 26.
Picker X-Ray Corp., White Plains, N.Y. 855,067, pub. 6-4-68. Cl. 26.
Pickering & Co., Inc., Plainview, N.Y. 855,026, pub. 6-4-68. Cl. 21.
Piedmont Chemical Industries, Inc., High Point, N.C. 855,312, pub. 6-4-68. Cl. 106.
Piggly Wiggly Operators' Warehouse, Inc., Shreveport, La. 855,327. Cl. 6.
Pillsbury Co., The, Minneapolis, Minn., from Tidy House Products Co., Shenandoah, Iowa. 733,983, canc. Cl. 52.
Pillsbury Co., The, Minneapolis, Minn. 855,188, pub. 6-4-68. Cl. 46.
Pioneer Dress Corp., Sumter, S.C. 855,138, pub. 6-4-68. Cl. 39.
Pioneer Suspender Co., Philadelphia, Pa., to Hickok Mfg. Co., Inc., Rochester, N.Y. 502,777, ren. 8-20-68. Cl. 39.
Plastering Development Center, Inc., Chicago, Ill. 733,650, canc. Cl. 12.
Plastics, Inc., St. Paul, Minn. 854,941, pub. 6-4-68. Cl. 2.
Playtape, Inc., New York, N.Y. 855,111, pub. 6-4-68. Cl. 36.
Pneumodynamics Corp., Cleveland, Ohio. 733,662, canc. Cl. 14.
Ponder & Best, Inc., Los Angeles, Calif. 855,108, pub. 6-4-68. Cl. 36.
Pope, Eddie, & Co.: *See—*
  Pope, M. Edward.
Pope, M. Edward, d.b.a. Eddie Pope & Co., Altadena, Calif. 855,040, pub. 6-4-68. Cl. 22.
Porter, H. K., Co., Inc., Pittsburgh, Pa. 855,094, pub. 6-4-68. Cl. 35.
Portland Stove Foundry Co., Portland, Maine. 244,167, ren. 8-20-68. Cl. 34.
Potter Instrument Co., Inc., Plainview, N.Y. 855,069, pub. 6-4-68. Cl. 26.
Powers, John Robert, Products Co. Inc., New York, N.Y. 733,911, canc. Cl. 51.
Precision Fittings, Inc., Andrews, Ind. 733,783, canc. Cl. 35.
Preservation Society of Newport County, Newport, R.I. 733,843-5, canc. Cl. 42.
Price-Pfister Brass Mfg. Co., Pacoima, Calif. 854,988, pub. 6-4-68. Cl. 13.
Pride Mfg., Inc., Fort Worth, Tex. 855,304, pub. 6-4-68. Cl. 103.

Prodelin, Inc., Highstown, N.J. 855,029, pub. 6-4-68. Cl. 21.
Professional Golf Co., Chattanooga, Tenn. 843,636. Am. 7(d). Cl. 22.
Professional Photographers of Ohio, Inc., Columbus, Ohio. 855,344. Cl. 200.
Pullman Car & Mfg. Corp., to Pullman Inc., Chicago, Ill. 243,990, ren. 8-20-68. Cl. 14.
Pullman Inc.: *See—*
Pullman Car & Mfg. Corp.
Pure Gold, Inc.: *See—*
Mutual Orange Distributors.
Pure Pharmacal Co., Houston, Tex. 855,239-40, pub. 6-4-68. Cl. 51.
Purex Corp., Ltd., Lakewood, Calif., from Cambridge Filter Corp., Syracuse, N.Y. 855,083, pub. 4-19-66. Cl. 31.
Quality Dress Marketing Ag, St. Gall, from Interstyle Ag, Glarus, Switzerland. 855,143, pub. 3-5-68. Multiple Class (Classes 39 and 42).
Rajah Zeetar Corp., Brooklyn, N.Y. 855,105, pub. 6-4-68. Cl. 36.
Ralston Purina Co., St. Louis, from Chic-N-Krisp, Inc., Kansas City, Mo. 855,172, pub. 6-4-68. Cl. 46.
Rank Organisation Ltd., The, London, England. 855,066, pub. 6-4-68. Cl. 26.
Rapids-Standard Co., Inc., The, Grand Rapids, Mich. 733,697, canc. Cl. 19.
Reed, Jerome G., d.b.a. ENR Technitape Network, Pittsburgh, Pa. 855,318, pub. 6-4-68. Cl. 107.
Rees, Pitchford & Co., Ltd., London, England. 733,656, canc. Cl. 13.
Register and Tribune Syndicate, Inc., The, Des Moines, Iowa. 855,127-8, pub. 6-4-68. Cl. 38.
Reiner Industries, Inc., Pico Rivera, Calif. 855,158, pub. 6-4-68. Cl. 40.
Rexall Drug & Chemical Co.: *See—*
Syracuse Ornamental Co.
Rexall Drug & Chemical Co., d.b.a. Vanda Cosmetics Co., Los Angeles, Calif. 855,222, pub. 6-4-68. Cl. 51.
Rexall Drug & Chemical Co., d.b.a. Vanda Cosmetics Co., Los Angeles, Calif. 855,226, pub. 6-4-68. Cl. 51.
Rheem Mfg. Co., New York, N.Y. 854,937, pub. 6-4-68. Cl. 2.
Rhythm Band, Inc., Fort Worth, Tex. 855,110, pub. 6-4-68. Cl. 36.
Richards Corp., The, McLean, Va. 855,071, pub. 6-4-68. Cl. 26.
Richardson-Merrell Inc., New York, N.Y. 855,328. Cl. 18.
Ric-Wil, Inc., Barberton, Ohio. 854,989, pub. 6-4-68. Cl. 13.
Ridge Pike Lumber Co., Inc., Conshohocken, Pa. 854,976-8, pub. 6-4-68. Cl. 12.
Riviana Foods Inc., Houston, Tex. 855,187, pub. 6-4-68. Cl. 46.
Riviana Foods Inc., Houston, Tex. 855,207, pub. 6-4-68. Cl. 46.
Roach, W. R., & Co., Grand Rapids, Mich., to Stokely-Van Camp, Inc., Indianapolis, Ind. 243,844, ren. 8-20-68. Cl. 46.
Rocket Research Corp., Seattle, Wash. 855,044, pub. 9-27-66. Cl. 23.
Rolock Inc., Fairfield, Conn. 855,072, pub. 6-4-68. Cl. 26.
SCM Corp., New York, N.Y. 855,056, pub. 6-4-68. Cl. 26.
Sanders Associates, Inc., Nashua, N.H. 855,065, pub. 6-4-68. Cl. 26.
Santa's Village, Arcadia, Calif. 733,711, canc. Cl. 22.
Scenic Sound: *See—*
Meadow, Joseph J., Jr.
Schering Corp., Bloomfield, N.J. 855,008, pub. 6-4-68. Cl. 18.
Schick, Frank J., Fort Wayne, Ind. 855,035, pub. 6-4-68. Cl. 22.
Scully Signal Co., Melrose, Mass. 733,745, canc. Cl. 26.
Sealectro Corp., Mamaroneck, N.Y. 855,033, pub. 6-4-68. Cl. 21.
Selas Corp. of America, Dresher, Pa. 441,403-4, ren. 8-20-68. Cl. 34.
Service Station Equipment Co., Bryan, Ohio, to John Wood Co., Muskegon, Mich. 243,589, ren. 8-20-68. Cl. 23.
Shapiro & Son Bedspread Corp., New York, N.Y. 855,165, pub. 6-4-68. Cl. 42.
Sharp & Dohme, Inc., Philadelphia, Pa., to Merck & Co., Inc., Rahway, N.J. 437,856, ren. 8-20-68. Cl. 18.
Sharp & Dohme, Inc., Philadelphia, Pa., to Merck & Co., Inc., Rahway, N.J. 500,418, ren. 8-20-68. Cl. 18.
Sharples Solvents Corp., The, to Pennsalt Chemicals Corp., Philadelphia, Pa. 243,227, ren. 8-20-68. Cl. 6.
Sheffield Hosiery Mills, Inc., Miami, Fla. 733,824, canc. Cl .39.
Shelby Gum Co., The, Shelby, to Spangler Candy Co., Bryan, Ohio. 502,863, ren. 8-20-68. Cl. 46.
Shelby Mfg. Co., The, Sidney, Ohio. 733,735, canc. Cl. 23.
Sherwin-Williams Co., The, Cleveland, Ohio. 854,963, pub. 6-4-68. Cl. 6.
Shields, Inc. of Attleboro, Mass., New York, N.Y. 855,228, pub. 6-4-68. Cl. 51.
Shields, Ron, Inc., Milford, Conn. 854,995, pub. 6-4-68. Cl. 15.
Shout Records, Inc., New York, N.Y. 855,116, pub. 6-4-68. Cl. 36.
Shyanne Co.: *See—*
Corrigan, J. P.
Siberian Fish Products Co., Inc., Seattle, Wash. 733,717, canc. Cl. 22.
Siler's Inc., New Orleans, La. 733,976, canc. Cl. 38.
Silvray-Litecraft Corp., Passaic, N.J. 855,031, pub. 6-4-68. Cl. 21.
Simon & Schuster, Inc.: *See—*
Monarch Press, Inc.
Simplot, J. R., Co., Boise, Idaho. 855,179, pub. 6-4-68. Cl. 46.
Siris, A. J., Products Corp., New York, N.Y. 733,607, canc. Cl. 3.
Sirloin Stockade, Inc., Oklahoma City, Okla. 855,279, pub. 6-4-68. Cl. 100.
Skrudland, Gabriel, d.b.a. Skrudland Photo Service, Chicago, Ill. 855,313, pub. 6-4-68. Cl. 106.
Skrudland Photo Service: *See—*
Skrudland, Gabriel.
Skyline Ind., Inc., Charlottesville, Va. 855,255, pub. 6-4-68. Cl. 51.
Smith, D. B., & Co., Inc., Utica, N.Y. 248,557, ren. 8-20-68. Cl. 23.
Smith Equipment & Supply Co., Chicago, Ill. 733,619, canc. Cl. 6.
Societe Galaxie, Paris, France. 855,139, pub. 6-4-68. Multiple Class (Classes 39 and 51).
Solo Kleinmotoren G.m.b.H., Wurttenberg, Germany. 855,047, pub. 6-4-68. Cl. 23.
Southern Sun Growers: *See—*
Hood, H. P., & Sons, Inc.
Southern Utah Winery, d.b.a. Dixie Valley Products, St. George, Utah. 733,905, canc. Cl. 47.
Spangler Candy Co.: *See—*
Shelby Gum Co., The.
Sparks Corp., Harleysville, Pa. 854,940, pub. 6-4-68. Cl. 2.
Sperry Rand Corp., New York, N.Y. 733,759, canc. Cl. 26.
Spokane House Motor Hotel: *See—*
Big West Oil Co. of Montana.
Sports Candles, Inc., Burlington, Wis. 733,871, canc. Cl. 46.
Standard Airways, Inc., Burbank, Calif. 733,956, canc. Cl. 105.
Standard Laboratories, Inc., Morris Plains, N.J. 733,675, canc. Cl. 18.
Standard Tool & Die Co., Los Angeles, Calif. 733,720, canc. Cl. 22.
Stand-Rite Co.: *See—*
Vibbert, Geo. R.
Stanley Home Products, Inc., Westfield, Mass. 855,326. Cl. 4.
Star Stations, Inc., Omaha, Nebr. 855,288, pub. 6-4-68. Cl. 101.
Star-Kist Foods, Inc., Terminal Island, Calif. 855,178, pub. 6-4-68. Cl. 46.
Steenolsen, Ken, South Pasadena, Calif. 854,950, pub. 6-4-68. Cl. 6.
Sterling Drug Inc.: *See—*
Hallemite Mfg. Co., The.
U.S. Sanitary Specialties Corp.
Stevcoknit Textile Co., New York, N.Y. 855,161, pub. 6-4-68. Cl. 42.
Stevens, J. P., & Co., Inc., New York, N.Y. 854,946, pub. 6-4-68. Multiple Class (Classes 5 and 6).
Stevens, J. P., & Co., Inc., New York, N.Y. 855,145, pub. 6-4-68. Cl. 39.
Stevens, J. P., & Co., Inc., New York, N.Y. 855,159, pub. 7-28-64. Cl. 42.
Stokely-Van Camp, Inc.: *See—*
Roach, W. R., & Co.
Stokvis Multiton Corp., Port Washington, N.Y. 733,727, canc. Cl. 23.
Storz Brewing Co., to Storz Brewing Co., Omaha, Nebr. 69,620, ren. 8-20-68. Cl. 48.
Stove Mounters' International Union of North America, St. Louis, Mo. 733,961, canc. Cl. B.
Success Motivation Institute, Inc., Waco, Tex. 855,133-4, pub. 6-4-68. Cl. 38.
Sullifoam, Inc., Willow Grove, Pa. 855,220, pub. 6-4-68. Cl. 50.
Sun Oil Co., Philadelphia, Pa. 439,724, ren. 8-20-68. Cl. 35.
Sun Oil Co., Philadelphia, Pa. 439,938, ren. 8-20-68. Cl. 4.,
Sundstrand Corp., Rockford, Ill. 855,050, pub. 6-4-68. Cl. 23.
Sunshine Biscuits, Inc., New York, N.Y. 855,203, pub. 6-4-68. Cl. 46.
Syracuse Ornamental Co., assor. to Syracuse Ornamental Co., Inc., New York, N.Y., to Rexall Drug & Chemical Co., d.b.a. Syroco, Los Angeles, Calif. 439,157, ren. 8-20-68. Cl. 50.
Syroco: *See—*
Syracuse Ornamental Co.
Tabo Chemical Corp., Sun Valley, Calif. 733,668, canc. Cl. 16.
Tani Farms, Santa Maria, Calif. 855,199, pub. 6-4-68. Cl. 46.
Tani Farms, Santa Maria, Calif. 855,214, pub. 6-4-68. Cl. 46.
Tasco Sales, Inc., Miami, Fla. 855,028, pub. 6-4-68. Cl. 21.
Taylor & Gaskin, Inc., Detroit, Mich. 854,938, pub. 6-4-68. Multiple Class (Classes 2 and 23).
Technical Tape Corp., New Rochelle, N.Y. 855,022, pub. 6-4-68. Cl. 20.
Telsta Corp., San Carlos, Calif. 855,051, pub. 6-4-68. Cl. 23.
Tescom Corp., Minneapolis, Minn. 854,986-7, pub. 6-4-68. Multiple Class (Classes 13, 21, 23, 26, and 34).
Texite, Inc.: *See—*
James, H. A.
Texize Chemicals, Inc., Greenville, S.C. 854,961, pub. 6-4-68. Cl. 6.
Thomas, James E., Jr., Memphis, Tenn. 854,948, pub. 6-4-68. Multiple Class (Classes 6, 12, and 16).
Thompson Ramo Wooldridge Inc., Cleveland, Ohio. 733,970, canc. Cl. 26.
Thornton, Eugene P., Murrells Inlet, S.C. 855,120, pub. 6-4-68. Cl. 37.
Tidy House Products Co.: *See—*
Pillsbury Co., The.
Topps Chewing Gum, Inc., Brooklyn, N.Y. 855,204, pub. 6-4-68. Cl. 46.
Tork Lift Sales & Mfg. Co.: *See—*
Mann, James F.
Trade-A-Plane: *See—*
Harrison, Cosby P.
Transamerica Development Co., Phoenix, Ariz. 855,270, pub. 6-4-68. Cl. 100.

Travel Guild of America, Inc., Baltimore, Md. 855,267, pub. 6-4-68. Cl. 100.
Triman Tele-Goal Ltd., Quebec, Canada. 855,039, pub. 6-4-68. Cl. 22.
Tri-Pee Co.: *See—*
Davis, Elmer H.
Tymshare Inc., Los Altos, Calif. 855,282, pub. 6-4-68. Cl. 101.
USV Pharmaceutical Corp., New York, N.Y. 855,011, pub. 6-4-68. Cl. 18.
Uniroyal, Inc.: *See—*
Eureka Fire Hose Co.
Unishops, Inc., Jersey City, N.J. 855,154, pub. 6-4-68. Cl. 39.
Universal Packers Corp., d.b.a. J.D. Packing Co., Oxnard, Calif. 855,216, pub. 6-4-68. Cl. 46.
United Aircraft Corp., Sunnyvale, Calif. 855,271, pub. 6-4-68. Cl. 100.
United Tours, Inc., Miami, Fla. 855,306, pub. 6-4-68. Cl. 105.
U.S. Automatic Sales, Inc., Avenel, N.J. 855,085, pub. 6-4-68. Cl. 31.
U.S. Industries, Inc., New York, N.Y., from Big Dutchman, Inc., Zeeland, Mich. 855,052, pub. 6-4-68. Cl. 23.
U.S. Plywood Corp., New York, N.Y. 733,643, canc. Cl. 12.
U.S. Sanitary Specialties Corp., Chicago, Ill., to Sterling Drug Inc., New York, N.Y. 240,415, ren. 8-20-68. Cl. 6.
U.S. Sanitary Specialties Corp., Chicago, Ill., to Sterling Drug Inc., New York, N.Y. 241,928, ren. 8-20-68. Cl. 6.
United States Rubber Co., New York, N.Y. 855,140, pub. 6-4-68. Cl. 39.
Upjohn Co., The, Kalamazoo, Mich. 855,009, pub. 6-4-68. Cl. 18.
Vanda Cosmetics Co.: *See—*
Rexall Drug & Chemical Co.
Velsicol Chemical Corp., from Velsicol Chemical Corp., Chicago, Ill. 854,951, pub. 6-4-68. Cl. 6.
Venus Foods, d.b.a. Memorie Foods, Los Angeles, Calif. 733,868, canc. Cl. 46.
Vereinigte Wachswarenfabriken A.G., Ditzingen, from Vereinigte Wachswarenfabriken A.G., Wurtemberg, Germany. 306,670, canc. Cl. 4.
Verley, Albert & Co., Linden, N.J. 733,626, canc. Cl. 6.
Vibbert, Geo. R., d.b.a. Stand-Rite Co., Syracuse, N.Y. 855,037, pub. 6-4-68. Cl. 22.
Victor Comptometer Corp., from Comptometer Corp., Chicago, Ill. 733,949, canc. Cl. 101.
Vieon's Donuts, Inc., Houston, Tex. 855,174, pub. 6-4-68. Cl. 46.
Viking Corp., The, Hastings, Mich. 855,059, pub. 6-4-68. Cl. 26.
Vincent Bar-None Co., Inc., Denver, Colo. 855,1966, pub. 6-4-68. Cl. 46.
Violet's Bakery: *See—*
Violet's Bakery Inc.
Violet's Bakery Inc., d.b.a. Violet's Bakery, Richmond, Va. 733,855, canc. Cl. 46.
Virginia Civil War Commission, Richmond, Va. 733,804, canc. Cl. 38.
Vistron Corp., Cleveland, Ohio. 855,082, pub. 6-4-68. Cl. 29.
Warner, George, Seed Co., Inc., Hereford, Tex. 854,928, pub. 6-4-68. Cl. 1.
Warshauser & Franck, Inc., to Eve Carver Fashions Corp., Boston, Mass. 502,854, ren. 8-20-68. Cl. 39.
Washington Fireworks Co., Inc., Washington, D.C. 854,973, pub. 6-4-68. Cl. 9.
Wescor Corp., Hawesville, Ky. 855,121, pub. 6-4-68. Cl. 37.
Wesley, Edward, & Co., Cincinnati, Ohio, to American Home Products Corp., New York, N.Y. 248,230, ren. 8-20-68. Cl. 51.
Westerly Marine Construction Ltd., Portsmouth, England. 855,015, pub. 6-4-68. Cl. 19.
Whitmer Co., The: *See—*
Denton, Marianna.
Williams Brothers Co., Tulsa, Okla. 855,269, pub. 6-4-68. Multiple Class (Classes 100 and 103).
Williams, Norman, Co., from E. Martinoni Co., San Francisco, Calif. 855,218, pub. 5-21-68. Cl. 49.
Wilson Laboratories, Inc., Detroit, Mich. 733,925, canc. Cl. 51.
Windsor Wax Co., Inc., Hoboken, N.J. 429,582, ren. 8-20-68. Cl. 52.
Windsor Wax Co., Inc., Hoboken, N.J. 430,241, ren. 8-20-68. Cl. 4.
Wohl Shoe Co., St. Louis, Mo. 249,305, ren. 8-20-68. Cl. 39.
Wollard, Donald L., d.b.a. Don's Marine Center, Islamorada, Fla. 855,014, pub. 6-4-68. Cl. 19.
Wolverine Fabricating & Mfg. Co., Inc., Inkster, Mich. 855,098, pub. 6-4-68. Cl. 35.
Wood, John, Co.: *See—*
Service Station Equipment Co.
Work Wear Corp., Cleveland, Ohio. 855,300, pub. 6-4-68. Cl. 103.
World-Wide Enterprises Ltd., Nashville, Tenn., from Martin Electronics Mfg. Corp., Hialeah, Fla. 855,104, pub. 6-4-68. Cl. 36.
Wright Air Lines, Inc., Cleveland, Ohio. 855,308, pub. 6-4-68. Cl. 105.
Wurzburg Brothers, assor. to Wurzburgh Brothers, Inc., to Wurzburg Brothers, Inc., Memphis, Tenn. 440,700, ren. 8-20-68. Cl. 2.
Wurzburg Brothers, Inc.: *See—*
Wurzburg Brothers.
Wyeth Inc., Philadelphia, Pa., to Mead Johnson & Co., Evansville, Ind. 503,140, ren. 8-20-68. Cl. 6.
Wyeth Inc., Philadelphia, Pa., to American Home Products Corp., New York, N.Y. 503,247, ren. 8-20-68. Cl. 18.
Yardley of London, Inc., Totowa, N.J. 855,221, pub. 6-4-68. Cl. 51.
Yardley of London, Inc., Totowa, N.J. 855,223, pub. 6-4-68. Cl. 51.
Young, George, & Co., Chicago, Ill. 733,716, canc. Cl. 22.

U.S. GOVERNMENT PRINTING OFFICE: O—1968

U.S. DEPARTMENT OF COMMERCE

OFFICIAL GAZETTE of the UNITED STATES PATENT OFFICE

August 27, 1968 — Volume 853 — Number 4

PATENTS

NOTICES

Board of Appeals Decisions Rendered in the Month of June 1968

Examiner affirmed	121
Examiner affirmed in part	14
Examiner reversed	30
Total	165

Adjudicated Patents

(D.C. Calif.) Pierce Patent No. 2,525,618 (280—11.13), for SKIS OF LAMINATED CONSTRUCTION. Claims 7, 9, 10, 11 and 12 *Held* invalid. *Sullivan* v. *Sears, Roebuck & Co.*, 282 F. Supp. 938; — USPQ —.

(D.C. Pa.) Maier Patent No. 2,654,813 (264—268), for SEALING MEMBERS OR LINERS FOR METAL CAPS OF BEVERAGE BOTTLE, *Held* valid but not infringed. *Continental Can Co.* v. *Crown Cork and Seal Inc.*, 281 F. Supp. 474; — USPQ —.

(D.C. Pa.) Maier Patent No. 2,654,914 (264—268), for SEALING MEMBERS. Claims 2, 3, 5, 7, and 8 *Held* valid and infringed. *Id.*

(D.C.N.Y.) Fulton Patent No. 2,908,021 (5—99), for PLAYYARD, *Held* invalid. *Trimble Products Inc.* v. *W. T. Grant Co.*, 283 F. Supp. 707; — USPQ —.

(D.C. Pa.) Seigle Patent No. 2,916,185 (220—110), for SUPPLY HOLDER, *Held* invalid. *Leesona Corp.* v. *Seigle*, 281 F. Supp. 575; 157 USPQ 344.

(D.C. Wash.) King and Adolphson Patent No. 2,935,473 (252—8.5), for DRILLING FLUID COMPOSITION AND PROCESS. Claims 1, 2, 4 to 7, 11, 13, 15, 17 to 22, 24 to 26, 29, 31 to 33, 36, 38 to 44, 46 to 49, 51, 53 to 59, 60, 63, 64, 67, 69, 71, 73 to 77, 79, 80, 83, 85 to 87, 90, 92 to 97, 99 to 102, 105 to 107, 113, and 118 *Held* valid and infringed. *Rayonier Inc.* v. *Georgia-Pacific Corp.*, 281 F. Supp. 687; 156 USPQ 110.

(D.C.N.Y.) Dickey Patent No. 2,957,793 (156—82), for METHOD OF LAMINATING POLYURETHANE-FOAM, *Held* invalid and not infringed. *Reeves Bros. Inc.* v. *U.S. Laminating Corp.*, 282 F. Supp. 118; 157 USPQ 235.

(D.C. Mass.) Dziadulonis Patent No. 3,074,470 (69—6.5), for MACHINE FOR REDUCING AND ROUGHENING THE MARGIN OF A SOLE, *Held* invalid and not infringed. *Industrial Shoe Machinery Corp.* v. *Accurate Shoe Machines, Inc.*, 278 F. Supp. 180; 147 USPQ 300.

(D.C. Del.) Omholt Patent No. 3,267,630 (53—489), for FLOORING SYSTEMS, *Held* invalid. *Powerlock Floors Inc.* v. *Robbins Flooring Co.*, 280 F. Supp. 627; 157 USPQ 669.

(D.C.N.Y.) Mastantuono and Vilardi Reissue Patent No. 24,877 (56—202), for GRASS CATCHER MEANS, *Held* invalid and not infringed. *Mastantuono et al.* v. *Ronconi*, 278 F. Supp. 144; 156 USPQ 629.

(D.C.N.Y.) Dickey Reissue Patent No. 25,493 (156—82), for LAMINATED STRUCTURE OF ADHERED MATERIALS, *Held* invalid and not infringed. *Reeves Bros. Inc.* v. *U.S. Laminating Corp.*, 282 F. Supp. 118; 157 USPQ 235.

(D.C.N.Y.) Rains Design Patent No. 201,793 (D13.1), for SWIMMING POOL, *Held* invalid. *Rains* v. *Niaqua Inc.*, 282 F. Supp. 383; 157 USPQ 695.

Foreign Patents Received in the Search Center, July 1968

Source	Date received	Highest number
Australia:		
(*Abstracts*)	July 19, 1968	36,614
(*Patents*)	July 29, 1968	280,739
Austria	July 15, 1968	262,150
Belgium	May 6, 1968	676,000
Canada	July 22, 1968	790,250
Czechoslovakia	Apr. 29, 1968	124,400
Denmark	June 6, 1968	109,130
East Germany	July 8, 1968	62,272
Egypt	June 28, 1968	6,873
Finland	June 24, 1968	36,828
France:		
(*Patents*)	July 25, 1968	1,518,500
(*Additions*)	July 24, 1968	91,050
(*Medicaments*)	July 17, 1968	5,200 M
(*Additions*)	May 2, 1968	162 CAM
Germany:		
(*Auslegeschriften*)	July 29, 1968	1,268,080
(*Patents*)	June 7, 1968	1,249,139
Great Britain	July 25, 1968	1,118,320
India	Apr. 11, 1968	101,130
Ireland	July 29, 1968	27,459
Italy	Apr. 25, 1968	670,000
Japan	July 31, 1968	15,560/68
Netherlands:		
(*Octrooiaanvragen*)	June 7, 1968	01,132/68
(*Patents*)	June 7, 1968	124,167
Norway	June 27, 1968	112,917
Pakistan	Feb. 3, 1964	112,446
Philippine Republic	Apr. 13, 1962	458
Poland	July 3, 1968	55,444
Rumania	June 27, 1968	49,897
Sweden	May 17, 1968	219,716
Switzerland	July 29, 1968	455,344
U.S.S.R.	July 23, 1968	210,057

Australia: First 2,000 incomplete
Belgium: First printed 493.079/1950
Canada: First printed 445,931/1948
Czechoslovakia: Not received between 81,300/1952 and 91,901/1959
Finland: First printed 19,428/1941
First 500 incomplete
Hungary: First received 5,792/1896
Latest 140,582/1951
Ireland: First received 10,000/1929
Italy: First 243,000 incomplete
Rumania: First received 40,380/1957
U.S.S.R.: Not received between 2,496/1928 and 116,000/1958
Yugoslavia: First received 10,001/1933
Latest 16,461/1941

New Applications Received During June 1968

Patents	7469
Designs	383
Plant Patents	5
Reissues	9
Total	7866

Issue—August 27, 1968

Patents	1000	—No. 3,398,406 to No. 3,399,405, incl.
Designs	79	—No. 212,070 to No. 212,148, incl.
Reissues	5	—No. 26,443 to No. 26,447, incl.
Total	1084	

Disclaimers

3,263,899.—*Peter C. Collura*, Waltham, and *Robert M. Hurley*, Lexington, Mass., and *Morton H. Robinson*, Devon, Pa. CARTON TEAR STRIP ARRANGEMENT WITH RECLOSURE FEATURE. Patent dated Aug. 2, 1966. Disclaimer filed June 7, 1968, by the assignee, *Container Corporation of America*.

Hereby enters this disclaimer to the single claim of said patent.

3,301,733.—*John A. West* and *William R. Eppes*, Charlotte, N.C. COMBINATION LABEL IMPRINTING AND APPLYING APPARATUS. Patent dated Jan. 31, 1967. Disclaimer filed July 15, 1968, by the assignee, *Idento Equipment Company*.

Hereby enters this disclaimer to claims 1, 6, 7 and 12 of said patent.

PATENT EXAMINING CORPS

R. A. WAHL, Assistant Commissioner

CONDITION OF PATENT APPLICATIONS AS OF AUGUST 9, 1968

PATENT EXAMINING OPERATIONS AND GROUPS	Actual Filing Date of Oldest Case Awaiting Action	
* Denotes date of oldest application for each Operation.	New	Amended
CHEMICAL EXAMINING OPERATION		
GENERAL CHEMISTRY AND PETROLEUM CHEMISTRY, GROUP 110—M STERMAN, Director Inorganic Compounds; Inorganic Compositions; Organo-Metal and Organo-Metalloid Chemistry; Metallurgy; Metal Stock; Electro Chemistry; Batteries; Hydrocarbons; Mineral Oil Technology; Lubricating Compositions; Gaseous Compositions; Fuel and Igniting Devices.	5- 2-66	1-16-64
GENERAL ORGANIC CHEMISTRY, GROUP 120—I MARCUS, Director Heterocyclic; Amides; Alkaloids; Azo; Sulfur; Misc. Esters; Carbohydrates; Herbicides; Poisons; Medicines; Cosmetics; Steroids; Oxo and Oxy; Quinones; Acids; Carboxylic Acid Esters; Acid Anhydrides; Acid Halides.	5- 2-66	5-24-63
HIGH POLYMER CHEMISTRY, PLASTICS AND MOLDING; GROUP 140—L. J. BERCOVITZ, Director Synthetic Resins; Rubber; Proteins; Macromolecular Carbohydrates; Mixed Synthetic Resin Compositions; Synthetic Resins With Natural Polymers and Resins; Natural Resins; Reclaiming; Pore-Forming; Compositions (Part) e.g.: Coating; Molding; Ink; Adhesive and Abrading Compositions; Molding, Shaping, and Treating Processes.	6- 6-66	1-27-64
COATING AND LAMINATING, BLEACHING, DYEING AND PHOTOGRAPHY, GROUP 160—J. R. LIBERMAN, Director Coating; Processes and Misc. Products; Laminating Methods and Apparatus; Stock Materials; Adhesive Bonding; Special Chemical Manufactures; Special Utility Compositions; Bleaching; Dyeing and Photography.	*10-12-65	5-27-63
SPECIALIZED CHEMICAL INDUSTRIES AND CHEMICAL ENGINEERING, GROUP 170—W. B. KNIGHT, Director Fertilizers; Foods; Fermentation; Analytical Chemistry; Reactors; Sugar and Starch; Paper Making; Glass Manufacture; Gas; Heating and Illuminating; Cleaning Processes; Liquid Purification; Distillation; Preserving; Liquid and Solid Separation; Gas and Liquid Contact Apparatus; Refrigeration; Concentrative Evaporators; Mineral Oils Apparatus; Misc. Physical Processes.	3-23-66	2-21-64
ELECTRICAL EXAMINING OPERATION		
INDUSTRIAL ELECTRONICS AND RELATED ELEMENTS, GROUP 210—W. S COLE, Director Generation and Utilization; General Applications; Conversion and Distribution; Heating and Related Art Conductors; Switches; Miscellaneous.	3- 9-66	3- 4-64
SECURITY, GROUP 220—S. BOYD, Director Ordnance, Firearms and Ammunition; Radar, Underwater Signalling, Directional Radio, Torpedoes, Seismic Exploring, Radio-Active Batteries; Nuclear Reactors, Powder Metallurgy, Rocket Fuels; Radio-Active Material.	4-10-67	2- 5-65
INFORMATION TRANSMISSION, STORAGE AND RETRIEVAL, GROUP 230—M. L. LEVY, Director Communications; Multiplexing Techniques; Facsimile; Data Processing, Computation and Conversion; Storage Devices and Related Arts.	*8- 9-65	*10-10-62
ELECTRONIC COMPONENT SYSTEMS AND DEVICES, GROUP 250—W. L. CARLSON, Director Semi-Conductor and Space Discharge Systems and Devices; Electronic Component Circuits; Wave Transmission Lines and Networks; Optics; Radiant Energy; Measuring.	10- 1-65	*10-10-62
PHYSICS, GROUP 280—R. L. EVANS, Director Photography; Sound and Lighting; Indicators and Optics; Measuring and Testing; Geometrical Instruments.	7-14-66	4- 1-65
DESIGNS, GROUP 290—S. BOYD, Director Industrial Arts; Household, Personal and Fine Arts.	11-30-67	11-28-66
MECHANICAL EXAMINING OPERATION		
HANDLING AND TRANSPORTING MEDIA, GROUP 310—A. BERLIN, Director Conveyors; Hoists; Elevators; Article Handling Implements; Store Service; Sheet and Web Feeding; Dispensing; Fluid Sprinkling; Fire Extinguishers; Coin Handling; Check Controlled Apparatus; Classifying and Assorting Solids; Boats; Ships; Aeronautics; Motor and Land Vehicles and Appurtenances; Railways and Railway Equipment; Brakes; Rigid Flexible and Special Receptacles and Packages.	3- 2-67	9- 2-65
MATERIAL SHAPING, ARTICLE MANUFACTURING, TOOLS, GROUP 320—N. BERGER, Director Manufacturing Processes, Assembling, Combined Machines, Special Article Making; Metal Deforming; Sheet Metal and Wire Working; Metal Fusion—Bonding, Metal Founding; Metallurgical Apparatus; Plastics Working Apparatus; Plastic Block and Earthenware Apparatus; Machine Tools for Shaping or Dividing; Work and Tool Holders Woodworking; Tools; Cutlery; Jacks.	10- 3-66	1- 6-65
AMUSEMENT, HUSBANDRY, PERSONAL TREATMENT, INFORMATION, GROUP 330—A. RUEGG, Director Amusement and Exercising Devices; Projectors; Animal and Plant Husbandry; Butchering; Earth Working and Excavating; Fishing, etc.; Tobacco; Artificial Body Members; Dentistry; Jewelry; Surgery; Toiletry; Printing; Typewriters; Stationery; Information Dissemination.	8-16-66	5-25-64
HEAT AND POWER ENGINEERING, GROUP 340—C. F. GAREAU, Director Power Plants; Combustion Engines; Fluid Motors; Pumps; Turbines; Heat Generation and Exchange; Refrigeration; Ventilation; Drying; Vaporizing; Temperature and Humidity Regulation; Machine Elements; Power Transmission.	7-17-67	7-20-66
FIXED CONSTRUCTIONS, SUPPORTS, AND HARDWARE, GROUP 350—T. J. HICKEY, Director Joints; Fasteners; Rod, Pipe and Electrical Connectors; Miscellaneous Hardware; Locks; Building Structures; Closure Operators; Bridges; Closures; Earth Engineering; Drilling; Mining; Furniture; Receptacles; Supports; Cabinet Structures.	2-10-67	12- 8-64
TEXTILES, CLEANING AND FLUID HANDLING, GROUP 360—F. H. BRONAUGH, Director Fluid Handling, including Valves; Conduits; Filling Receptacles; Lubrication; Joint Packing; Bathroom Fixtures; Centrifugal Separators; Cleaning; Coating; Pressing; Agitating; Foods; Textiles; Apparel and Shoes and their Manufacture; Sewing Machines; Winding and Reeling.	*5-31-66	*5-29-63

Total number of pending applications (excluding Designs) 189.909
Total number of Design applications pending 2,959

Expiration of patents: The patents within the range of numbers indicated below expire during August 1968, except those which may have expired earlier due to shortened terms under the provisions of Public Law 690, 79th Congress, approved August 8, 1946 (60 Stat. 940) and Public Law 619, 83rd Congress, approved August 23, 1954 (68 Stat. 764), or which may have had their term curtailed by disclaimer under the provisions of 35 U.S C. 253.

Patents: Numbers 2,562.875 to 2,566,294, inclusive
Plant Patents: Numbers 1,024 to 1,034, inclusive

DECISIONS IN PATENT AND TRADEMARK CASES

U.S. Court of Customs and Patent Appeals

IN RE CLAUS L. SPORCK

No. 7805. Decided November 24, 1967

[55 CCPA —; 386 F.2d 924; — USPQ —]

1. PATENTABILITY—CLAIMS—FEATURE DISCLOSED BUT NOT CLAIMED.
"Also he [appellant] appears to be relying on the specification to impart to the claims limitations not recited therein. Such reliance is ineffective to define over the prior art. *In re Lundberg*, 44 CCPA 909, 244 F.2d 543, 113 USPQ 530."

2. SAME—PARTICULAR SUBJECT MATTER—"METAL WORKING."
The refusal of certain claims in an application entitled "Metal Working," as unpatentable over the prior art, is affirmed.

Appeal from the Patent Office. Serial No. 121,653.

AFFIRMED.

Frederick J. Olsson for appellant.

Joseph Schimmel (*George C. Roeming*, of counsel) for the Commissioner of Patents.

Before WORLEY, *Chief Judge*, RICH, SMITH, and ALMOND, *Associate Judges*, and Judge WILLIAM H. KIRKPATRICK *

KIRKPATRICK, *J.*, delivered the opinion of the court.

This appeal is from the decision of the Board of Appeals affirming the rejection of claims 23, 24, 25, 26 and 28 of appellant's application Serial No. 121,653, filed July 3, 1961, for "Metal Working." Seven claims stand allowed.

The invention relates to working strip or sheet metal with a roller. Appellant states that conventional working of strip or sheet involves use of a roller which extends all the way across the strip. With that method, the roller is said to bow, resulting in there being a crown on the strip and a variation in thickness. Grinding or machining is required to eliminate those effects.

The specification states:

> The basic concept of the invention is to carry out the working so that the sheet or strip is reduced in very small increments. According to the invention, sheet or strip is engaged with a roller within a limited contact area and the roller is moved into the sheet so that one small increment after another is displaced or reduced. With an incremental quantum of material being worked at any instant, the force required for working is proportionately smaller. This minimizes the possibility of distortion of the roller, the support and the connected mechanism. Thus the space between the support surface and the roller working surface (this space determining thickness) can be very closely maintained. The reduction of the increments takes place progressively along a path extending from one edge of the sheet to the other and this kind of reduction is repeated successively along other parallel paths which are spaced from the first path in a direction normal thereto. * * *

In one form of the invention, a sheet of rolled stock is clamped at one longitudinal edge to the work table of a conventional shaper and a narrow roller is mounted on a tool holder on the ram of the machine with its rotational axis perpendicular to the clamped edge. The tool holder with the roller is adapted to reciprocate back and forth in a longitudinal direction while the table with the clamped

* Senior District Judge, Eastern District of Pennsylvania, sitting by designation.

work sheet is adapted for stepwise transverse movement. The details of the method are best explained with reference to FIGURES 2 and 3 of the application drawings, reproduced below:

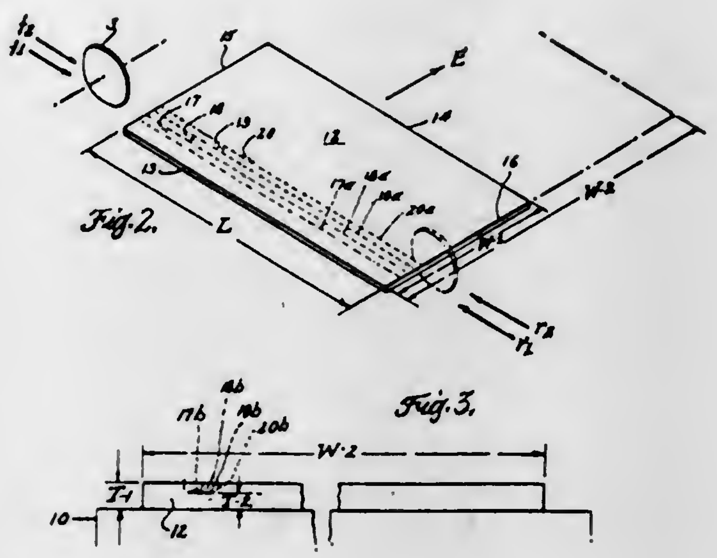

The ram carrying the roller is operated so that the roller 3 is moved from the position shown in FIG. 2 in a direction indicated by the arrow *f*–1 toward the edge 15 to engage the sheet 12 and then moved along the path indicated by the dotted line 17*a*. The space between the roller and support is set so that the roller in moving along the path 17*a* displaces the metal and forms a groove as indicated by dotted line 17*b* in FIG. 3. After it passes out of contact with the edge 16, the roller is stopped and the work table carrying the strip is moved to the left to the location which results in the dotted line 18 being positioned to be engaged by the roller. With the work held fixed in the new position, the roller is then moved in the direction of the arrow *r*–1 so as to travel along the path 18*a* to widen the groove 17*b* as indicated at 18*b* in FIG. 3. The same steps are repeated with the roller moving along the paths 19*a*, 20*a* and so on until the edge 14 of the sheet is reached. The process results in the sheet, except for the clamped edge 13, being reduced in thickness from T–1 to T–2 as shown in FIG. 3 and increased in width from W–1 to W–2 as shown in FIG. 2.

As a modification, the application discloses producing a sheet having ribs on one side. That is accomplished by rolling increments of the sheet to one predetermined thickness over spaced areas to form the ribs and to a lesser thickness in the intervening areas between the ribs. Other modifications are also disclosed, including a process for providing a taper in the cross section of the strip and another for providing a sheet with "a checker-board design pattern, i.e., a series of hills and valleys."

Claims 24, 25, 26 and 28 read:

> 24. A method of providing precise thickness dimension in metal sheet or strip stock comprising the steps of:
> taking a substantially flat piece of stock;
> working the stock to reduce its thickness to a desired dimension by rolling adjacent increments of the stock to reduce the same to the desired thickness dimension, the reducing being progressive along a path lying in a plane containing the thickness dimension of the stock, the width of each said increment taken in a direction normal to said plane being substantially less than the total width of the portion of the stock to be reduced and the reduction along the path causing the stock to expand in a direction normal to the plane; and

continuing said working by performing second said step successively on respectively adjacent areas of the stock, the path of each repeat step being parallel to said plane and spaced from the plane in a direction normal to the plane, the worked portion of the stock having said desired thickness dimension.

25. A piece of stock made in accordance with the method of claim 24.

26. The method of claim 24 wherein the portion of the stock being worked is maintained in planar form.

28. A method of providing ribs on sheet or strip stock, comprising the steps of:

taking a substantially flat piece of stock;

working the stock by rolling to reduce the thickness of adjacent increments of the stock, the reducing being done along a path lying in a plane containing the thickness dimension of the stock, the width of each said increment taken in a direction normal to said plane being substantially less than the total width of the portion of the stock to be reduced and the reduction along the path causing the stock to expand in a direction normal to the plane; and

repeating last said step successively in respectively adjacent areas of the stock, the path of each repeat step being parallel the said plane and spaced from the said plane in a direction normal to the plane and performing the repeat steps in discrete spaced apart areas to form spaced sections and portions connecting the sections, the sections and portions extending parallel said plane, the thickness of the spaced sections being greater than the thickness of the connecting portions whereby the spaced sections constitute ribs.

Claim 23 is similar to claim 24 with the additional recitation of "the reducing being done on one face of the stock."

The only reference before us is:

Weiss (Germany), 360,767, October 6, 1922.

Weiss discloses a method of reducing the thickness of a portion of a metal plate by rolling. For a better understanding of the method, FIGURES 3, 5, 6 and 7 of that reference are reproduced below:

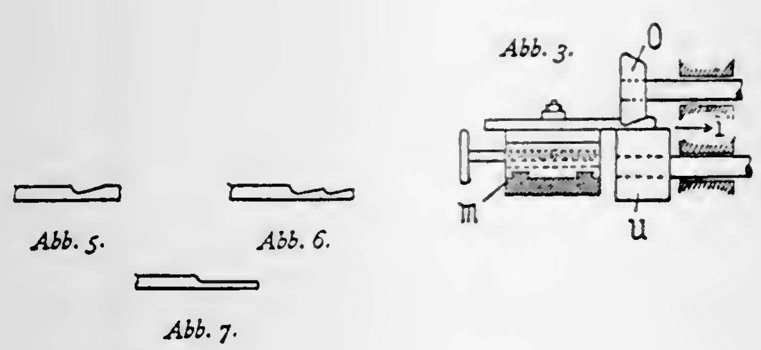

As shown in FIGURE 3, the plate portion to be reduced is passed between the "conical" roll *o*, which is actually frustoconical in shape, and the supporting roll *u* to produce the configuration shown in FIGURE 5. Weiss discloses that the rolling action may be repeated to cover an area and that a plurality of rolls may be used as an alternative. It states concerning the rolls:

> Their tapered portion, however, is pointed towards the outer edge of the material being rolled, towards which the displacement of material also takes place, on the one hand due to the arrangement of the conical rolls, and on the other hand because, according to experience, the material being rolled always takes the course of least resistance, the resistance here actually being minimal in the direction of the edge.

The reference describes the repeated rolling as follows:

> The arrow *t* in FIG. 3 indicates the direction of the material displacement, and arrow *k* in FIG. 4 indicates the direction of rolling. According to the breadth of the strip to be produced, this rolling is repeated several times, the plates being shifted accordingly on carriage *n* for this purpose. The margin then looks as shown in FIGS. 5 and then 6. If the upper roll *o* is replaced by a smooth roll like roll *u*, then a margin is achieved as is represented in FIG. 7. * * *

With respect to the ultimate attainment of a sheet having smooth surfaces on both sides, Weiss discloses:

> The working procedure can accordingly be performed by first pre-rolling a number of plates with the conical roll, then replacing the latter with smooth rolls and rolling the plates further therewith; or else by arranging the smoothing rolls directly behind the profiled rolls and thus performing the complete roling in one procedure.

The Examiner rejected claims 23, 24, 25 and 28 as "fully met by Weiss (35 U.S.C. 102)" and claim 26 as "unpatentable (obvious) over Weiss (35 U.S.C. 103)."

Appellant grounds his principal argument on the meaning of the word "adjacent." He states that the claims on appeal use that word "to describe the reduction as the roller moves along a path" and also "to describe the relationship between successive paths." He continues:

> It is contrary to common sense and to the dictates of the disclosure that anyone would practice the invention by moving the roller along a path while at the same time moving it up and down to get peaks between increments. This would destroy the objective of the invention.
>
> One skilled in the art would practice the invention by interpreting the word "adjacent" for spacing between the paths as meaning "no peaks between the paths."
>
> It would be contrary to the disclosure for one to practice the invention by spacing the paths to get peaks between the paths. This would destroy the whole objective of the invention.
>
> It is obvious from the specification and drawings that the word "adjacent" has a meaning as described above. There are three portions of the specification which dramatically emphasize this.

Appellant then sets forth portions of his specification, including part of that quoted hereinabove, which state that the reduction paths of the roller are relatively close and that each path is small.

However, no error is seen in the view of the Examiner and the Board that the appealed claims do not distinguish over Weiss by the use of the word "adjacent." So far as the reduction by the roller as it moves along each path is concerned, the relationship between adjacent increments in Weiss is obviously the same as with appellant's method and the word "adjacent" thus is clearly met. The areas of the successive passes of the roller in Weiss also appear to meet any requirement of the word "adjacent," it being apparent that Weiss does not teach leaving unrolled any space between the areas covered by such passes of his "conical" roller. While peaks result from the shape of the roller, they are *in* the adjacent areas rather than *between* them. Further, as pointed out by the Board and conceded by appellant in his brief, the height of the peak shown at the right of Weiss' FIGURE 6 is smaller than the original thickness of the material. That condition is further evidence that no unrolled area is left between the successive rolled areas in the reference.

It is apparent that appellant is relying on the word "adjacent" to distinguish the size and shape of his roller from the "conical" and apparently wider roller of Weiss, a significance it plainly does not have. **[1]** Also he appears to be relying on the specification to impart to the claims limitations not recited therein. Such reliance is ineffective to define over the prior art. *In re Lundberg*, 44 CCPA 909, 244 F.2d 543, 113 USPQ 530.

Appellant has provided copies of three patents which relate to subject matter similar to that involved here and use the word "adjacent" in certain claims. Those patents are not considered significant here, it being apparent that they are not authority for assigning any particular meaning to "adjacent" in the present case.

Appellant seems to see some significance in the reference in claims 24, 25 and 26 to the stock being "reduced to" and "having" a "desired thickness dimension." It is apparent, however, that "desired" does not distinguish from the thickness dimension which Weiss desires to provide with the corresponding steps of his method.

It is further urged by appellant that claim 28 is not met by Weiss because of its recitation of performing the repeat steps in "discrete spaced apart areas to form spaced sections and portions connecting the sections." We do not agree. Repeated rolling steps over adjacent areas in Weiss will result in a plurality of spaced apart raised portions with lower connecting portions therebetween and thereby meet the terms of the claim.

Appellant's arguments depend essentially on the meaning of "adjacent" and raise no points with respect to claims 25 and 26 other than those relied on with regard to base claim 24. Moreover, separate consideration of claims 25 and 26 compels the conclusion that their rejection, like that of the other appealed claims, is free of reversible error.

[2] The decision is affirmed.

AFFIRMED.

U.S. Court of Customs and Patent Appeals

RIDGE PIKE LUMBER COMPANY, INC.
v.
WILLIAM D. BOWERS LUMBER CO.

No. 7858. Decided December 28, 1967

[55 CCPA—; 393 F.2d 843; 156 USPQ 152]

1. TRADEMARK—CONFUSING SIMILARITY—"BLUE RIDGE HOMES" AND "RIDGE PIKE HOMES."

Comparing the marks in their entireties, the words "RIDGE" and "HOMES" are used in both marks. However, the qualifying term "PIKE" as used in appellant's mark and the qualifying term "BLUE" as used in appellee's mark make the marks different in sound, appearance and meaning. We agree with the Board that confusion would not be likely * * *"

APPEAL from Patent Office. Cancellation No. 8263.

AFFIRMED.

Seidel and Gonda, Arthur H. Seidel for appellant.

Lloyd P. Shank for appellee.

Before WORLEY, *Chief Judge*, CLARK, *Justice*,[1] RICH, SMITH, *and* KIRKPATRICK,[2] *Judges*

SMITH, *J.*

The Trademark Trial and Appeal Board denied appellant's petition to cancel appellee's registration of the mark "BLUE RIDGE HOMES" with certain design features, 147 USPQ 397 (TTAB 1965).[3]

[1] Associate Justice, retired, of the Supreme Court of the United States, sitting by designation.

[2] Senior District Judge, Eastern District of Pennsylvania, sitting by designation.

[3] Registration No. 693,036, for "prefabricated building components—namely, roof trusses and wall panels," in Class 12, issued February 16, 1960. The word "Homes" is disclaimed apart from the mark. Appellee alleges a date of first use of May 29, 1959. Appellant's petition to cancel was filed pursuant to section 14 of the Trademark Act of 1946, 15 U.S.C. 1064.

Appellant's petition is based on its alleged prior and continuous use, since 1956, of the mark "RIDGE PIKE HOMES," its prior and continuous use of its trade name, "Ridge Pike Lumber Company, Inc.," and what it asserts to be the goodwill attaching to the name "RIDGE HOMES." Appellant asserts that extensive goodwill had developed in the term "RIDGE HOMES" prior to May 29, 1959 and that, since 1963, it had used this term as a trademark for its products. It was appellant's position that appellee's registered mark is a substantial duplicate of its marks and trade name, and is applied to goods identical with those sold by appellant. Appellant concludes its petition with the averment that appellee's use of the registered mark here in issue will damage appellant because of the likelihood of confusion and deception as to the origin of appellee's goods.

Briefly stated, the Board concluded that there is no likelihood of confusion between appellant's mark "RIDGE PIKE HOMES" and appellee's mark "BLUE RIDGE HOMES" even though used on similar goods. It found appellant's record insufficient to show rights in "RIDGE HOMES" prior to the filing date of appellee's registration.

Appellant contends here, as it did below, that the record proves that it had used "RIDGE PIKE HOMES" and "RIDGE HOMES" from a date commencing earlier than the earliest date which can be relied on by appellee as its first date of use of "BLUE RIDGE HOMES"; that the goods of the parties are identical; and that the dominant portion of the respective marks constitutes the term "RIDGE."

We have reviewed the record as to appellant's asserted use of the mark "RIDGE HOMES." On the record we agree with the Board that:

> * * * There is however no evidence of any use by petitioner [appellant] of "RIDGE HOMES" prior to February 1963 and the mere statement by the witness that petitioner has been so referred to is wholly insufficient to establish that petitioner was publicly known as "RIDGE HOMES" from March 1956 until its adoption as a mark in 1963. Petitioner has not established superior rights in "RIDGE HOMES" and said mark cannot be considered in determining whether petitioner is damaged by respondent's [appellee's] registration.

Thus, the issue to be determined here is the likelihood of confusion arising from the use of the marks "RIDGE PIKE HOMES" and "BLUE RIDGE HOMES" on the respective goods of the parties.

[1] Comparing the marks in their entireties, the words "RIDGE" and "HOMES" are used in both marks. However, the qualifying term "PIKE" as used in appellant's mark and the qualifying term "BLUE" as used in appellee's mark make the marks different in sound, appearance and meaning. We agree with the Board that confusion would not be likely, and support this conclusion, as the Board did, by the statement in its opinion that:

> * * * The term "BLUE RIDGE" is a unitary term having reference to the southeastern range of the Allegheny Mountains. The term "RIDGE PIKE" is also a unitary term and is the name of the road on which petitioner [appellant] is located. The impression created by each of these terms is completely different. Further, considering respondent's [appellee's] mark in its entirety, there is very little resemblance between that mark and petitioner's [appellant's] mark in appearance and we also note a substantial difference in sound between "BLUE RIDGE" and "RIDGE PIKE." * * *

For the foregoing reasons, the decision of the Board is affirmed.

AFFIRMED.

PATENT SUITS

Notices under 35 U.S.C. 290 ; Patent Act of 1952

2,623,467. (See 2,765,807.)

2,625,683, Roth and Lombard, CRASH HELMET, **filed** Sept. 7, 1967, D.C., S.D. Tex. (Houston), Doc. 67–H–690, *Bell-Toptex, Inc.* v. *Surgical Engineering & Research Corp et al.* Order of dismissal pursuant to request for the parties. Action dismissed without prejudice, Apr. 9, 1968.

2,672,675, R. E. Cross, LOCATING AND CLAMPING MECHANISM, **filed** Apr. 10, 1968, D.C., E.D. Mich. (Detroit), Doc. 31134, *The Cross Company* v. *Buhr Machine Tool Company.*

2,705,553, J. E. Thomson, TYPEWRITER CONSTRUCTION, **filed** May 21, 1962, D.C., S.D.N.Y., Doc. 62–C–1824, *Louis Marx & Co., Inc.* v. *Henry Katz, Inc.* Final consent judgment, Apr. 5, 1968.

2,742,122, J. E. Stanley, ACOUSTICAL CEILING CONSTRUCTION; **3,301,165,** same, CEILING AIR CONDITIONING SYSTEM, **filed** Mar. 19, 1968, D.C., C.D. Calif. (Los Angeles), Doc. 68–444–CC, *Duo-Flex Corp. et al.* v. *Acoustics, Inc. and Air Factors, Inc.*

2,748,025, Sackett, Mead and Miller, MACHINE FOR APPLYING SEALING MATERIAL TO ARTICLES, **filed** Apr. 10, 1968, D.C., E.D. Mich. (Detroit), Doc. 31131, *The Wolf Detroit Envelope Company* v. *Robert Love Company.*

2,762,397, W. G. Miller, FLOW CONTROL DEVICE; **3,189,125,** Windsor and Lodge, FLOW CONTROL, **filed** Mar. 23, 1967, D.C., E.D. Wis. (Milwaukee), Doc. 67–C–95, *Hays Mfg. Co.* v. *Autotrol Corp.* Consent judgment, Apr. 5, 1968.

2,765,807, V. L. Andrew, SANITARY UNDERGROUND DISCHARGE FOR A WELL WATER SYSTEM; **2,623,467,** same, WATER SYSTEM, **filed** Feb. 21, 1968, D.C., W.D. Wis. (Madison), Doc. 68–C–32, *Duplex Mfg. Co.* v. *Whitewater Mfg. Co.* On motion of defendant to dismiss action on the ground that venue is improperly laid in the Western District of Wisconsin, case is dismissed, Apr. 9, 1968.

2,880,309, Gallagher and Pelino, HOT BOX DETECTOR, **filed** Feb. 15, 1967, U.S.C.A., 4th Cir., Va. (Richmond), Doc. 11,208, *Servo Corp. of America* v. *General Electric Co.* Judgment of District Court is reversed and cause remanded for further proceedings, Mar. 14, 1968. **Same, filed** Feb. 15, 1967, U.S.C.A., 4th Cir., Va. (Richmond), Doc. 11,209, *Servo Corp. of America* v. *General Electric Co.* Judgment of District Court is reversed and cause remanded for further proceedings, Mar. 14, 1968.

2,897,840, Roberts and Roberts, HOSE AND METHOD OF MAKING SAME, **filed** Apr. 8, 1968, D.C., N.D. Ohio (Cleveland) Doc. C68–237, *Marion R. Roberts and Robert E. Roberts, doing business as Fred T. Roberts & Co.* v. *Goodyear Tire & Rubber Co.*

3,078,477, Schmid and Maciukiewicz, WALL CLOSET CARRIER, **filed** Apr. 1, 1966, D.C.N.J. (Newark), Doc. 333–66, *Jay R. Smith Mfg. Co.* v. *Zurn Industries, Inc.* Order of dismissal, Apr. 10, 1968. **Same, filed** Feb. 3, 1966, D.C.N.J. (Newark), Doc. C–107–66, *Zurn Industries, Inc.* v. *Jay R. Smith Mfg. Co.* Consent judgment permanent injunction in favor of plaintiff, Apr. 10, 1968.

3,112,018, C. S. Gehrle, VALANCE, **filed** Apr. 4, 1968, D.C., S.D.N.Y., Doc. 68–C–1389, *Presto Lock Co., Inc.* v. *Wakefield Industries, Inc. et al.*

3,152,682, Rutkovsky and Rutkovsky, CONVEYOR FOR SELECTIVE DISPATCHING OF ARTICLES, **filed** Aug. 21, 1964, D.C., District of Columbia (Washington), Doc. 2062–64, *Railex Corporation* v. *Joseph Guss & Sons, Inc. and G. A. Graun, Inc.* Stipulation to dismiss pursuant to Rule 41(a)(ii) of Federal Rules of Civil Procedure filed in the Civil Clerk's Office, Apr. 11, 1968.

3,189,125. (See 2,762,397.)

3,216,038. (See 3,330,721.)

3,219,177, S. V. Chelminski, ACOUSTIC WAVE IMPULSE GENERATOR REPEATER, **filed** Apr. 7, 1965, D.C.N.J. (Newark), Doc. 359–65, *Bolt Associates Inc.* v. *Alpine Geophysical Associates, Inc.* Consent judgment for permanent injunction declaring patent valid, Apr. 2, 1968.

3,269,877, Schlossberg and Carrier, PHOSPHATE COATING COMPOSITION, **filed** Mar. 21, 1968, D.C., E.D. Mich. (Detroit), Doc. 31046, *Detrex Chemical Industries, Inc.* v. *Quality Production Co., Inc.*

3,301,165. (See 2,742,122.)

3,330,721, Gould and Gould, SYNTHETIC FILAMENTS AND METHOD OF MAKING THE SAME; **3,216,038,** same, SYNTHETIC PLASTIC BROOM BRISTLES, **filed** July 19, 1967, D.C.N.J. (Newark), Doc. 762–67, *Keystone Plastics, Inc.* v. *Carey Plastics Co., Inc. and Gilbert Carey.* Consent judgment, permanent injunction declaring patents valid, Apr. 3, 1968.

D. 209,159, Kesilman, Fenn and Kravitz, SILVER WASHING BASKET, **filed** Apr. 3, 1968, D.C., E.D.N.Y. (Brooklyn), Doc. 68C–329, *Green Valley Products Inc.* v. *Sterwood Corporation.*

REISSUES

AUGUST 27, 1968

Matter enclosed in heavy brackets [ ] appears in the original patent but forms no part of this reissue specification; matter printed in italics indicates additions made by reissue.

26,443
PANEL STRUCTURE FOR SOFT-SIDED LUGGAGE
Michael Kish, Jr., Hightstown, N.J., assignor to Atlantic Products Corporation, Trenton, N.J., a corporation of New Jersey
Original No. 3,266,604, dated Aug. 16, 1966, Ser. No. 443,019, Mar. 26, 1965, which is a continuation-in-part of Ser. No. 387,390, Aug. 4, 1964. Application for reissue Feb. 13, 1967, Ser. No. 617,440
5 Claims. (Cl. 190—41)

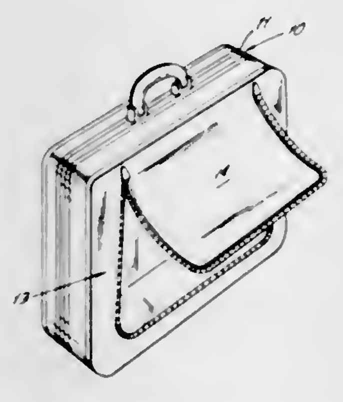

A carrying bag having flexible sides, one of which has a U-shaped flap with a zipper closure. The U-shaped opening in the panel receiving the flap has a zipper half extending from its interior surface, while the flap has a cooperating zipper half extending from its interior surface. The zipper fabrics envelop around the edges of the flap and panel, with the flap being pulled over the opening to cover the zipper when the zipper is closed. A reinforcing wire is secured to the edge of the opening.

26,444
HONEYCOMB ARTICLES AND METHOD OF PRODUCING SAME
Richard E. Paige, New York, N.Y., assignor to Hallmark Cards Incorporated, Kansas City, Mo., a corporation of Missouri
Original No. 3,235,431, dated Feb. 15, 1966, Ser. No. 219,394, Aug. 27, 1962. Application for reissue June 14, 1967, Ser. No. 651,639
11 Claims. (Cl. 161—14)

An ornamental, multicolored, honeycomb article made by applying at least one stripe of color on each of a plurality of sheets of material, superposing said sheets with the color stripes in register, securing the sheets together along spaced-apart, alternately staggered lines of adhesive to form a mat and cutting the mat along selected lines to define an article of predetermined configuration, the article being in an initially flat condition, there being a backing member secured to, and covering substantially all of, each of the exteriorly exposed sheets of material to permit expansion of the sheets into the finished article, there being a cellular pattern presented by the outer face of the finished article, the cells having a depth extending inwardly of the article with certain of said cells being the color of said stripe whereby to give the finished article the desired, predetermined ornamental appearance.

26,445
HIGH SPEED CIRCUIT BREAKER WITH FLIP-FLOP MECHANISM
Otto Jensen, Malvern, Pa., assignor to I-T-E Circuit Breaker Company, Philadelphia, Pa., a corporation of Pennsylvania
Original No. 3,302,144, dated Jan. 31, 1967, Ser. No. 441,647, Mar. 22, 1965. Application for reissue Dec. 5, 1967, Ser. No. 693,031
12 Claims. (Cl. 335—183)

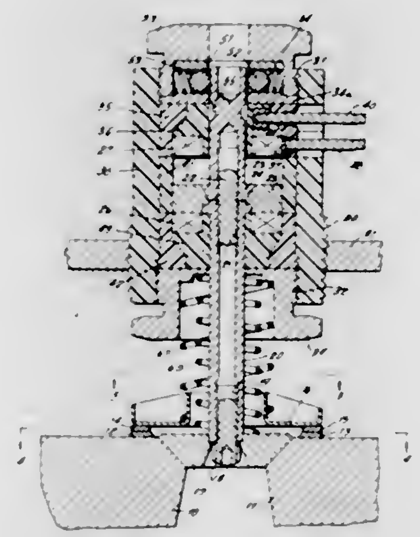

A high speed circuit breaker is provided with a double acting operating mechanism consisting of a ring-shaped conductive armature defining a short circuited winding connected to a shaft for controlling a movable contact and a pair of spaced windings on opposite sides of the armature positioned on a common axis and lying in spaced parallel planes with the armature. When a high impulse voltage is applied to the pair of windings, a current is induced in the armature in such a direction that the magnetic fields of the armature and the winding which it is closest to very strongly repel one another forcing the armature to move toward the other winding. Movement of the armature causes movement of the shaft and thereby movement of the contact.

26,446
HIGH CAPACITY GIN STAND
Eugene H. Brooks and Richard M. Shelburne, Sherman, Tex., assignors to Hardwicke-Etter Company, Sherman, Tex., a corporation of Texas
Original No. 3,266,101, dated Aug. 16, 1966, Ser. No. 205,245, June 26, 1962. Application for reissue Feb. 8, 1967, Ser. No. 617,439
11 Claims. (Cl. 19—57)

A dual cotton gin having an upper and a lower ginning stage each of which includes a saw cylinder projecting into a common roll box and a separate lint exhaust duct. An air inlet passage, disposed intermediate the stages,

extends from the rear of the gin to the upper stage. The gin also includes mote handling means and a breast section which are described in detail.

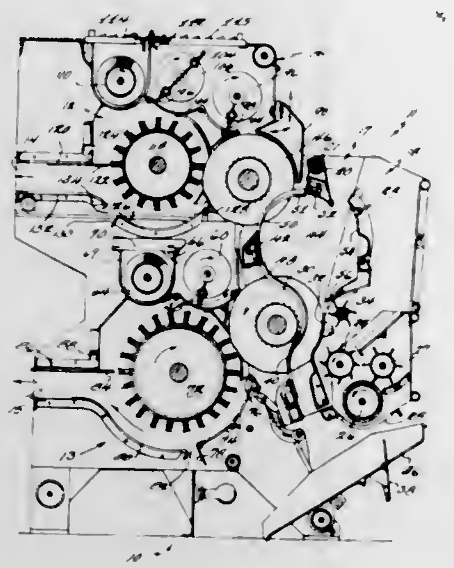

A large installation includes a battery of the dual gins and a separate lint cleaner for each stage of each gin. The lint cleaners discharge to a common lint condenser, or a separate condenser may be provided for all upper stages and for all the lower stages.

26,447
SLUG RETAINING TAPPING PUNCH AND METHOD OF USE
Thomas E. McMurray and Eugene C. Knoblock, South Bend, Ind., assignors to M. B. Skinner Company, division of The Fanner Manufacturing Company division of Textron Inc., Providence, R.I., a corporation of Rhode Island
Original No. 3,287,997, dated Nov. 29, 1966, Ser. No. 347,151, Feb. 25, 1964. Application for reissue Nov. 13, 1967, Ser. No. 687,076
17 Claims. (Cl. 77—42)

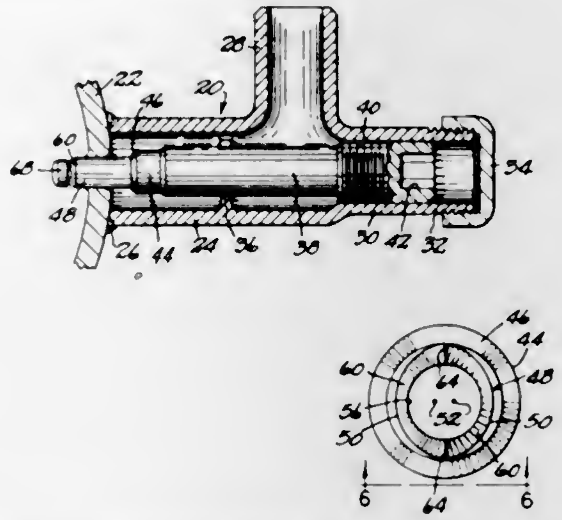

A slug retaining tapping punch and method of tapping an opening in a metal pipe in which a slug is formed in making the opening and removed from the pipe.

PATENTS

GRANTED AUGUST 27, 1968

GENERAL AND MECHANICAL

3,398,406
BUOYANT BULLETPROOF COMBAT UNIFORM
Nelson J. Waterbury, Palm Beach, Fla., assignor of twenty-five percent to Nicholas R. du Pont, Wilmington, Del.
Filed Dec. 30, 1965, Ser. No. 517,671
6 Claims. (Cl. 2—2.5)

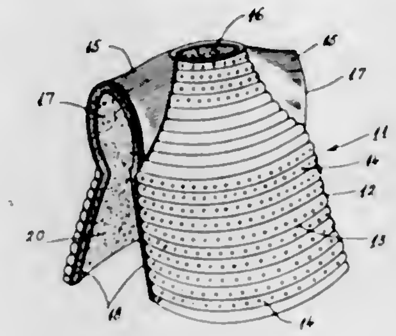

A combat garment that is buoyant, bulletproof, shock resistant and flexible permitting maximum body movements. The garment is composed of a plastic material, such as fiber glass, resin or the like, mixed with submicron metallic particles in the molecular structure. The material is molded into parallel ribs hinged to each other.

3,398,407
PETTICOAT,
Gladys F. Herbert, P.O. Box 625, Hilo, Hawaii 96720
Filed Aug. 11, 1966, Ser. No. 571,789
6 Claims. (Cl. 2—211)

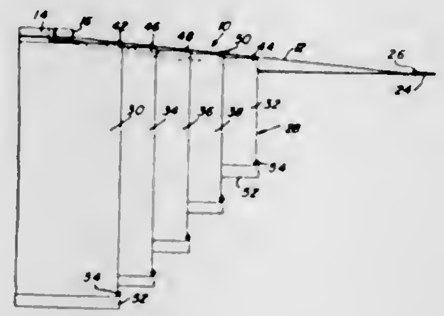

A petticoat consisting of a circular top skirt or foundation having a plurality of parallel tubular sections or portions equally spaced from each other and joined in ungathered position to the undersurface of the circular top skirt. The tubular sections are of decreasing length from the inner to the outer section and constructed to have the lower free edges parallel to the bottom of the circular top skirt or foundation when in a static position. The innermost tubular section has a diameter and is so arranged as to encompass the wearer comfortably and allow freedom of leg movement. The tubular sections are straight and parallel and cannot expand beyond a right angle in relation to the circular top skirt or foundation when in an extended whirling position thus forming a cylinder at all times. Inasmuch as the tubular sections cannot expand beyond the top applied diameters, this insures protection from visible exposure of the wearer's torso and upper legs.

3,398,408
HYGIENIC WASHSTAND
Paul Capraro, 25238 Westfield Ave., Detroit, Mich. 48239, and Domenico Panaccione, Inkster, Mich.; said Panaccione assignor to said Capraro
Filed June 9, 1966, Ser. No. 568,088
5 Claims. (Cl. 4—7)

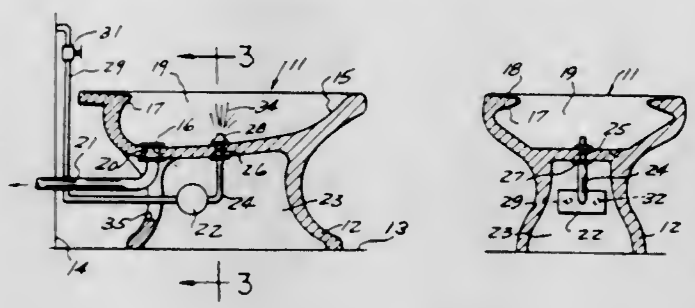

1. A bidet comprising a bowl having an inclined bottom wall with an aperture at its deepest point;
sidewalls and a top support flange;
a drain extending and sealed into said aperture and including a drainpipe;
a closed cylindrical body defining a pressure chamber located exteriorally of said bowl;
a delivery pipe connected to said body and having an upwardly extending outlet projected through and sealed within an aperture in said bottom wall and projecting thereabove;
a flange on said delivery pipe and spaced from said outlet, in registry with the bottom wall at its undersurface;
an apertured fitting threaded over said outlet in operative, supporting registry with said bottom wall;
separate hot and cold water supply pipes, each including a hand control valve, and connected to said body respectively;
each of said supply pipes being of an internal diameter appreciably less than the internal diameter of said outlet;
said outlet pipe in cooperation with said pressure controlling body automatically regulating outlet flow of mixed and hot and cold water to a heighth approximating said top support flange regardless of the extent of opening of both hand valves;
full opening of one said hand valves only, being insufficient to provide appreciable fountaining of water at said outlet.

3,398,409
FIXTURE FOR BACK-TO-BACK MOUNTING OF WATER CLOSETS
Courtney C. Pope, Haines City, Fla., assignor to Simpli-ci-ty Products Corporation, Haines City, Fla., a corporation of Florida
Filed Dec. 2, 1966, Ser. No. 599,668
5 Claims. (Cl. 4—252)

A fixture assembly is provided for use with back-to-back mounted water closets of either the siphon-jet type or the blow-out type. The fixture assembly includes a barrel having openings in opposite sides thereof and mounted with one of the openings opposite each of the water closets, flow sleeves communicating with the openings and also with the water closets for delivering water

from the water closets to the barrel, a first soil pipe leading from upstream of the barrel into the barrel and past the sleeves and openings, a second soil pipe communicating with the barrel downstream from the openings and a baffle within the barrel dividing the interior of the barrel into two chambers. The baffle extends to a point downstream from the sleeves for directing water flow from the sleeves downstream into the second soil pipe and preventing water flow to cross the barrel and enter

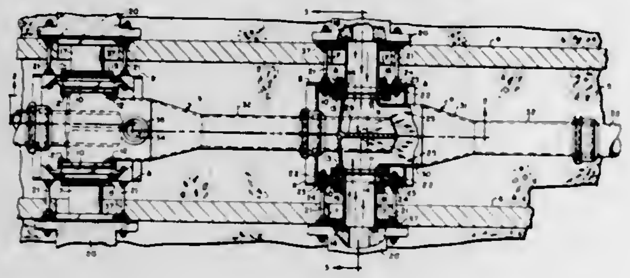

the other sleeve. Since the first soil pipe extends past the sleeve and openings, water flowing from upstream of the barrel is carried past the sleeves and openings to prevent entry of such water into the sleeves. The barrel, soil pipes and baffle are preferably integral portions of a single metal fixture unit. The fixture assembly is provided with seals which make it water tight, and an adjustable cover plate may be provided between sleeves and the barrel so that the barrel and soil pipes may be inclined to allow multiple installations of fixture assemblies.

3,398,410
TOILET SEAT SAFETY RAILS
Clarence D. Sparling, 19995 Snowden, Detroit, Mich. 48235
Filed Apr. 18, 1966, Ser. No. 543,414
1 Claim. (Cl. 4—254)

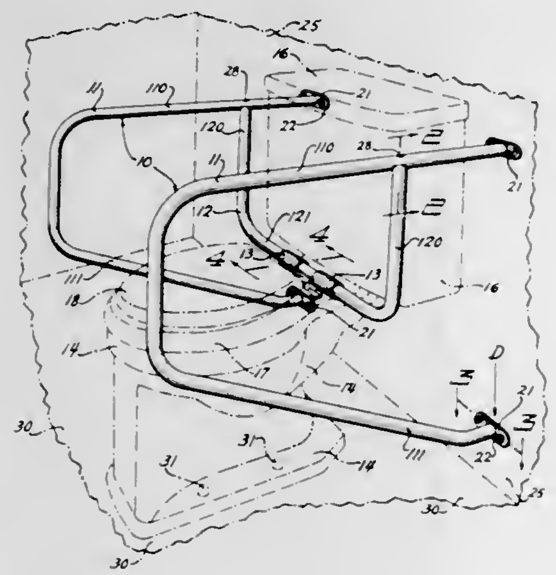

1. A toilet seat safety rail securable to a wall rearwardly of a toilet bowl having a toilet seat hingedly mounted thereon at the top rear portion thereof by conventional toilet seat hardware, said toilet seat safety rail comprising

a pair of laterally spaced vertically disposed longitudinal generally U-shaped side rails each including an upper rearwardly disposed horizontal leg and a lower diagonally rearwardly and downwardly disposed leg,

a vertical transversely disposed U-shaped stabilizer-spacer rail including a pair of vertical legs and a horizontal base,

means rigidly connecting each vertical leg of said U-shaped stabilizer-spacer bar to and in depending relationship from an upper horizontal leg to one said U-shaped side rails,

resilient bearing means on said horizontal base of said U-shaped stabilizer-spacer rail positioned to bear on the toilet bowl rearwardly of the toilet seat hardware,

an anchor bar rigidly connected to the free ends of each leg of said U-shaped side rails,

means securing the anchor bar at the free ends of the upper horizontal legs of the U-shaped side rails to said wall with the resilient bearing means on the base of said U-shaped stabilizer-spacer rail bearing on said toilet bowl, and

means securing the anchor bar at the free ends of the lower diagonally rearwardly and downwardly disposed legs of said U-shaped side rails to said wall in a position deflected downwardly from its normal attitude whereby to pre-stress the entire toilet seat safety rail in a firm and solid position with respect to said toilet bowl and with only the resilient bearing means of said U-shaped stabilizer-spacer rail bearing solidly upon said toilet seat bowl.

3,398,411
BEDSPRINGS
John Douglass, St. Louis, Mo., assignor to Affiliated Hospital Products, Inc., St. Louis, Mo., a corporation of Delaware
Filed Nov. 21, 1966, Ser. No. 595,677
21 Claims. (Cl. 5—67)

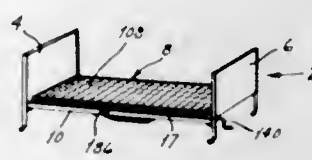

A bedspring having a frame with a back section and thigh section hingedly connected thereto. A thrust tube connects to the back section below its hinged axis and swings the back section with respect to the frame. Three links interconnect the back and thigh sections so that the thigh section can be raised simultaneously with the back section, the last link being disengageable from the thigh section so that the back section can be raised independently. A foot section is hingedly connected to the thigh section and is provided with rollers which engage tracks on the frame. A modified form of the invention has legs swingably connected to the back section for engaging the frame and holding the back section in a horizontal position. A trip plate is rotatively mounted on the frame for camming the legs away from the frame so that the back section can be optionally depressed into a Trendelenburg position. A rod at the foot end of the frame operates the trip plate.

3,398,412
METHOD FOR PRECIPITATION OR WASHING OF MATERIALS CONTAINING CELLULOSE
Toivo Ensio Aremaa, Karhunkatu 32F19, Karhula, Finland
Filed Dec. 6, 1965, Ser. No. 511,634
Claims priority, application Sweden, Dec. 17, 1964, 15,309/64
4 Claims. (Cl. 8—156)

A method for thickening washed cellulose containing materials in a closed vessel having inlets, outlets and filtering surfaces therein comprising the steps of maintaining an over-pressure condition of 14 to 42 p.s.i. at the discharge end of the vessel by supplying the material

thereto under pressure. The discharge of the material, solution separated therefrom and a washing solution are

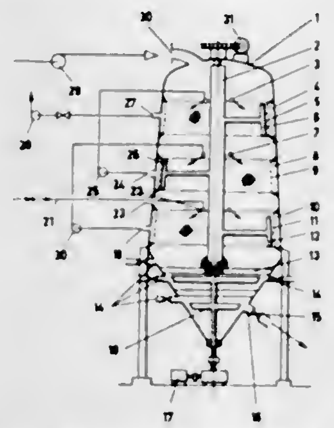

all controlled. The washing solution is directed against the flow of the material as a counterflow.

3,398,413
MACHINES FOR PINCH-POINTING METAL SCREWS
Edwin J. Skierski, Wayne, N.J., assignor to Parker-Kalon Corporation, Clifton, N.J., a corporation of Delaware
Continuation of application Ser. No. 475,533, July 28, 1965. This application Sept. 20, 1967, Ser. No. 675,999
2 Claims. (Cl. 10—9)

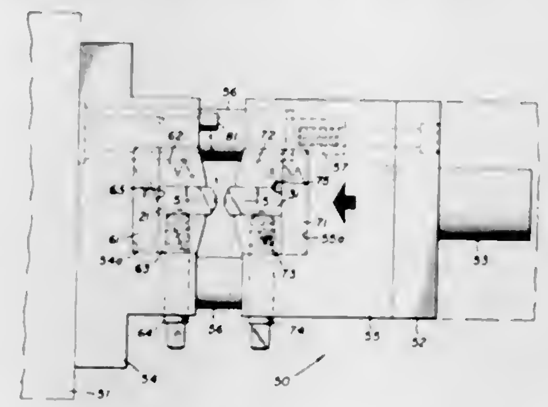

A machine for pointing the pilot end of a metal screw blank having means for precisely locating a pair of complementary dies and for guidingly moving the dies into an operative position. The dies are constructed to prevent contact between the work faces thereof during operation of the machine.

3,398,414
LAST JACK HAVING EJECTION MEANS
Karl F. Vornberger, Tewksbury, and Walter Vornberger, Medford, Mass., assignors to Jacob S. Kamborian, Newton, Mass.
Filed June 1, 1967, Ser. No. 642,851
6 Claims. (Cl. 12—126)

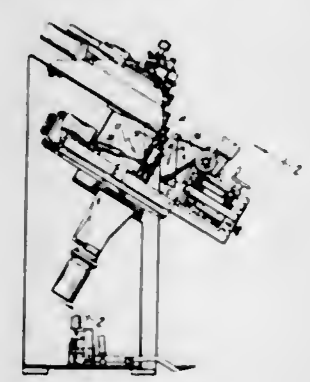

This disclosure relates to a last jack adapted to support a last in a bottom-up position so as to enable various shoe manufacturing operations to be performed on or about the last. The last jack incorporates an ejection device that is adapted to eject the last after completion of the various shoe manufacturing operations.

3,398,415
COMPOSITE LAST
Anthony A. Mattos, Bristol, R.I., assignor to Marbill Company, Providence, R.I., a corporation of Rhode Island
Filed Dec. 28, 1966, Ser. No. 605,416
3 Claims. (Cl. 12—133)

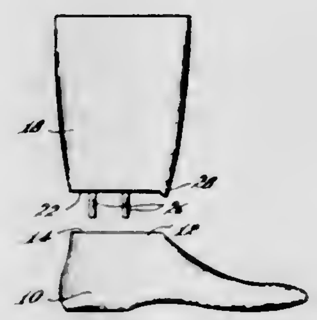

A last for making footwear comprising a short last upon which shoes may be manufactured and an extension in the form of a leg attachable to the shoe last to provide a composite last upon which boots may be manufactured.

3,398,416
APPARATUS FOR MECHANICALLY CLEANING DOOR FRAMES OF HORIZONTAL COKE OVENS
Heinz Spindeler, Bochum-Langendreer, Germany, assignor to Dr. C. Otto & Comp. G.m.b.H., Bochum, Germany
Filed Sept. 8, 1965, Ser. No. 486,599
Claims priority, application Germany, July 24, 1965, O 11,023
12 Claims. (Cl. 15—93)

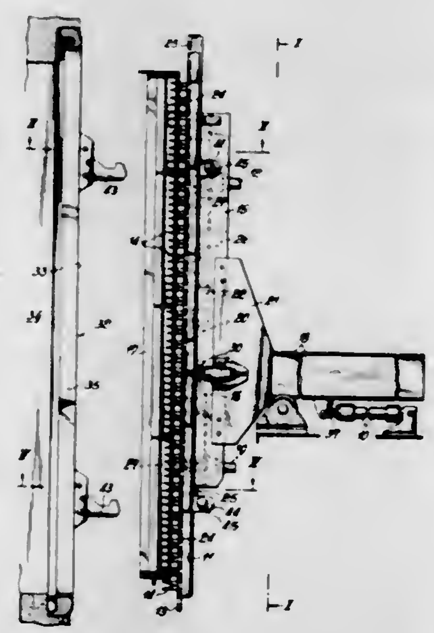

1. An apparatus for cleaning the door frame of a coke oven, especially horizontal chamber oven, which includes: a frame structure movable toward and away from a coke oven door frame to be cleaned, scraping means in the form of relatively rigid grate means disposed in a plane parallel to the plane of said door frame, said grate means having a plurality of substantially rhombic apertures therethrough whereby a plurality of scraping edges are formed on the grate means, said scraping means being supported by said frame structure and being guided there-

on for reciprocation bodily in a substantially vertical plane on said frame structure a distance equal to at least the height of a grate aperture, and actuating means on said frame structure operatively connected to said scraping means for substantially vertically reciprocating the scraping means on said frame structure, said scraping means having the same width as the region to be cleaned thereby while being of such height as to permit vertical movement thereof while in engagement with the door frame to be cleaned.

3,398,417
DEVICE FOR CLEANING GUNS
Clyde L. Erwin, 503 Windsor St., Florence, Ala. 35630
Filed Oct. 19, 1966, Ser. No. 587,877
5 Claims. (Cl. 15—104.19)

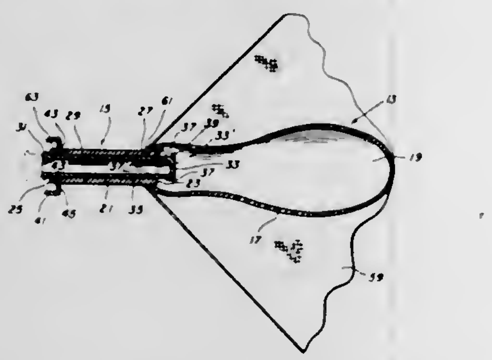

A portable gun barrel cleaning device having a small balloon-like inflatable portion with rigid sleeve means secured on the mouth portion of the inflatable portion and including valve means for inflating or deflating the inflatable portion and including cord means for pulling the portion through the bore of the gun barrel. The inflatable portion is adapted to be inflated by mouth by the user of the device. The device includes a cleaning cloth which is adapted to be arranged over the inflated inflatable portion, and said portion is adapted to be pulled through the bore of the gun barrel in cleaning the barrel.

3,398,418
DEVICE FOR REMOVING LINT FROM CLOTHES
Hans Bogner, Martinstrasse 10, and Frich Dobler, Auf der Schanz 8, both of Lindenberg, Allgau, Germany
Filed Sept. 23, 1966, Ser. No. 581,503
5 Claims. (Cl. 15—105)

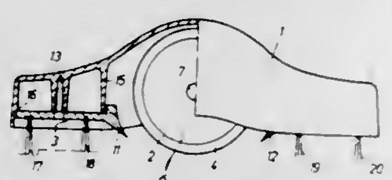

A device for removing lint and fuzz from fabric comprising a roller rotatably mounted in a housing, said roller covered with a roll of adhesive tape with the adhesive facing outwardly and having a portion extending from the bottom thereof, and brush means mounted on the bottom thereof having bristles extending downwardly from the bottom thereof on at least one side of the roller.

3,398,419
COMBINED SCRAPER AND BRUSH CLEANING TOOL
James A. Carlos, 5801 Streefkerk, Apt. D–27, Warren, Mich. 48092
Filed Nov. 10, 1966, Ser. No. 593,551
5 Claims. (Cl. 15—111)

A cleaning tool particularly adapted for use in cleaning T-shaped guideways of a machine tool consisting of a two piece handle portion defining a T-shaped cleaning element

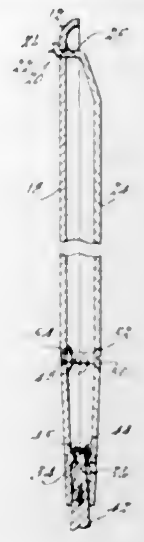

at one end and an opening at the other end for detachably receiving a brush.

3,398,420
MOP HOLDER DEVICE
George H. Manning, 1512 Pine, Grand Island, Nebr. 68801
Filed Oct. 5, 1966, Ser. No. 584,582
5 Claims. (Cl. 15—150)

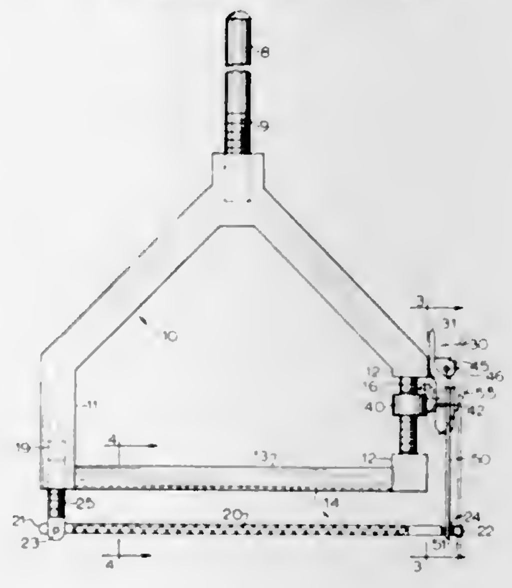

A mop holder for a multi-filament mop element having a fixed jaw and a pivotal jaw adjustably mounted with respect to the fixed jaw to accommodate various thicknesses of mop elements. A lever actuated U-shaped catch engages the free end of the pivotal jaw to maintain it in mopping position.

3,398,421
TOOTHBRUSH HAVING PIVOTAL BRISTLE CARRYING MEMBERS
Abraham Rashbaum, 199—29 22nd Ave., Whitestone, N.Y. 11357
Filed Mar. 28, 1967, Ser. No. 626,461
6 Claims. (Cl. 15—167)

A toothbrush device having a handle portion, the device being characterized by one or more bristle carrier members movably supported on the handle, the bristle tufts of the carrier members being arranged in a generally U-shaped conformation.

In use, the tufts defining the base of the U engage the crown of the tooth while the branch portions of the U-shaped tufts engage the sides of the tooth and rubber tips are provided to massage the gums.

Where two or more bristle carrier members are pivotally connected to the handle, the carriers, by reason of their relative articulation, are free to conform to the degree of curvature of the row of teeth in the particular area being brushed.

3,398,422
ROTARY BRUSH FOR CARPET SCRUBBING MACHINE
Robert M. Barry and Anton J. Reiling, St. Paul, Minn., assignors to Multi-Clean Products, Inc., St. Paul, Minn., a corporation of Minnesota
Filed Jan. 25, 1968, Ser. No. 700,491
3 Claims. (Cl. 15—180)

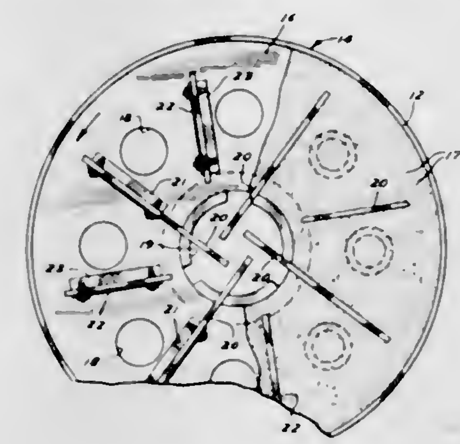

A carpet scrubbing brush adapted to be mounted on a scrubbing machine for rotation on a vertical axis and having a horizontally disposed backboard with downwardly projecting bristles and a plurality of wiper blades mounted on the underside of the backboard and extending in generally radial directions through the bristles, the blades being hinged to the backboard for limited movement about horizontal axes.

3,398,423
CORN CLEANER
Francis A. Miller, Milton-Freewater, Oreg., assignor to Key Equipment Company, Inc., Milton-Freewater, Oreg., a corporation of Oregon
Filed Mar. 14, 1966, Ser. No. 534,223
2 Claims. (Cl. 15—306)

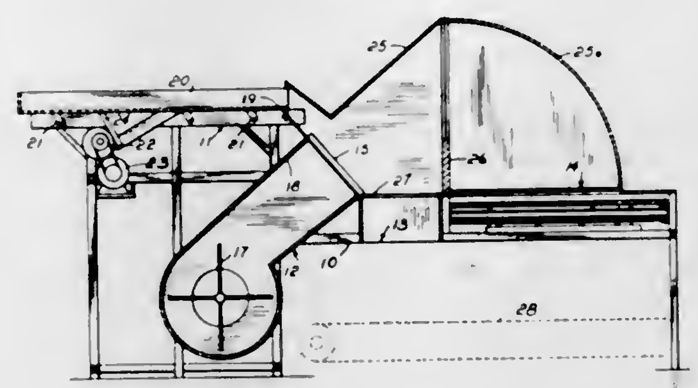

A cleaning mechanism for separating waste matter from harvested corn. It utilizes a vibrating feed conveyor that delivers corn to an inclined perforated table where it is subjected to a perpendicular blast of air. Waste matter is then deflected by a hood onto a moving screen belt. The corn drops from the table into a hopper for further processing.

3,398,424
SLIDING DOOR CLOSER
Thomas F. Nieman, Denver, Colo., assignor to Patio Door Closer, Inc., Denver, Colo., a corporation of Colorado
Filed Jan. 28, 1966, Ser. No. 523,750
1 Claim. (Cl. 16—80)

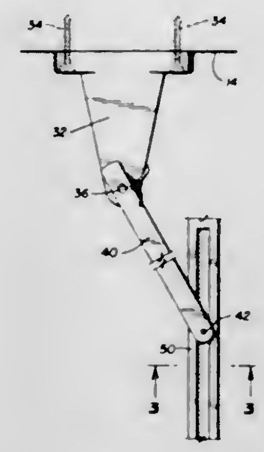

An automatic, spring-biased closer for sliding doors includes a lintel mounted base member supporting a pivotal arm extending downwardly therebelow, and the arm has its lower end reciprocably mounted in a slide track mounted on a stile of the door. A coil spring mounted between the base and the arm biases the arm and door mounted slide track toward closed position.

3,398,425
HINGES
Gordon Croxson, Woodbury, and Alan Roger Griffiths, Marlow, England, assignors to Illinois Tool Works Inc., Chicago, Ill., a corporation of Delaware
Filed Sept. 7, 1966, Ser. No. 577,643
11 Claims. (Cl. 16—150)

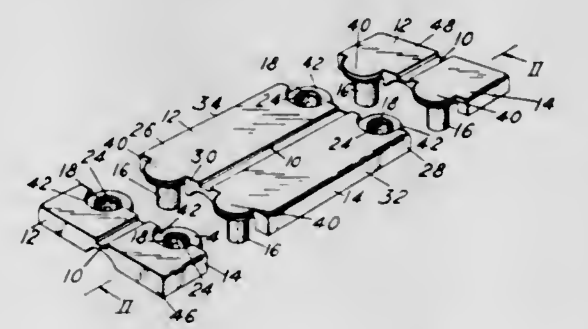

Plastic hinge capable of taking up variations in total length caused by thermal expansion of the plastic hinge material comprises a plurality of individual hinge units having aligned hinging portions and cooperating fastening means.

3,398,426
SAFETY HINGES
Welbourne D. McGahee, Satellite Beach, Fla., assignor of one-fourth each to William R. Maddux, Miami, and Jim Rathmann, Melbourne, Fla.
Original application Sept. 2, 1964, Ser. No. 393,894, now Patent No. 3,263,269, dated Aug. 2, 1966. Divided and this application June 17, 1966, Ser. No. 574,486
5 Claims. (Cl. 16—169)

1. A hinge with a pair of leaves having knuckles with a pintle with a head therethrough comprising a pintle retainer member, a first flat portion on said retainer member having at least one hole adapted to receive means to secure said retainer member to a flat surface, a first bond in said retainer member, a second flat portion following said first bend, a second bend in said retainer, a

pair of fork members following said second bend defining a slot adapted to fit around said pintle below said

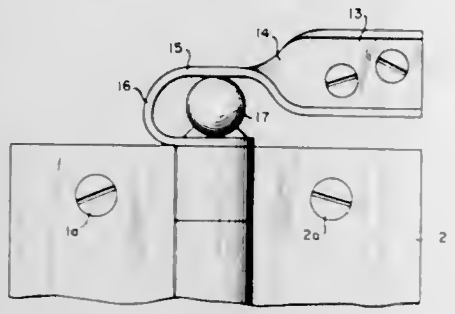

pintle head, said fork members and said second flat portion defining a space receiving the said pintle head whereby the pintle is restrained in movement.

3,398,427
APPARATUS FOR SIMULTANEOUSLY BLOW MOLDING AND COMPRESSION MOLDING PLASTIC CONTAINERS
Frederick W. John, Rochester, N.Y., assignor to The Nalge Company, Inc., Rochester, N.Y., a corporation of New York
Filed Aug. 6, 1965, Ser. No. 477,692
20 Claims. (Cl. 18—5)

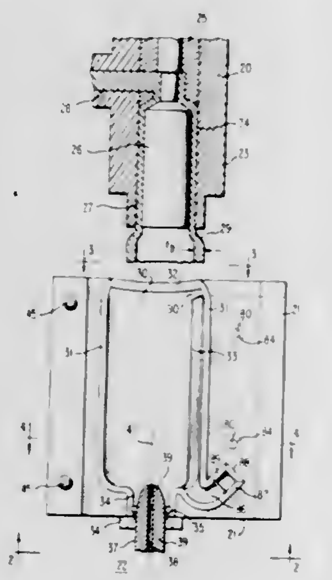

There is disclosed herein an improved plastic liquid container together with method and apparatus for manufacturing the same. The container is characterized by unitary blow molded construction and has among its features an integral blow-molded discharge tube, and preferably also an integral compression molded removable closure. The apparatus includes a mold and a molding machine with the mold being characterized by two engageable mold sections each having one or more cavities of proper configuration to form the container and a compression molding die portion to form the closure. The mold is constructed according to certain dimensional relationships so as to produce an operative and commercially acceptable product. Suitable dimensional relationships are maintained between the mold and the remainder of the molding machine for like purposes. Also characteristic of the machine is the facility to control blowing pressure in relation to degree of mold closure. The method of this invention is characterized by the concurrent blow molding of the container and discharge tube and compression molding of the various container portions and by control of the degree and times of pressurization in relation to the degree of mold cloure to produce a properly formed container.

3,398,428
BLOW MOLDING APPARATUS
Edwin E. Fuerst, Colrain, Mass., and Robert B. Mason, West Hartford, Conn., assignors to Monsanto Company, St. Louis, Mo., a corporation of Delaware
Continuation-in-part of application Ser. No. 391,920, Aug. 25, 1964. This application Apr. 6, 1967, Ser. No. 644,424
6 Claims. (Cl. 18—5)

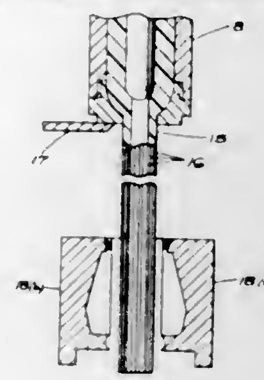

A blow molding apparatus having a multitude of sharply contoured protrusions in the extrusion outlet for imparting a grooved configuration to the surface of a parison formed in the outlet. The parison is expanded in a mold to form a container having a striated appearance, with the striated effect obtained by light reflecting from the surfaces of the walls of the grooves formed by the protrusions.

3,398,429
SPINNERET ENCLOSURE
Frederick Stoever Dickson III, Martinsville, Va., assignor to E. I. du Pont de Nemours and Company, Wilmington, Del., a corporation of Delaware
Filed Oct. 10, 1966, Ser. No. 585,641
6 Claims. (Cl. 18—8)

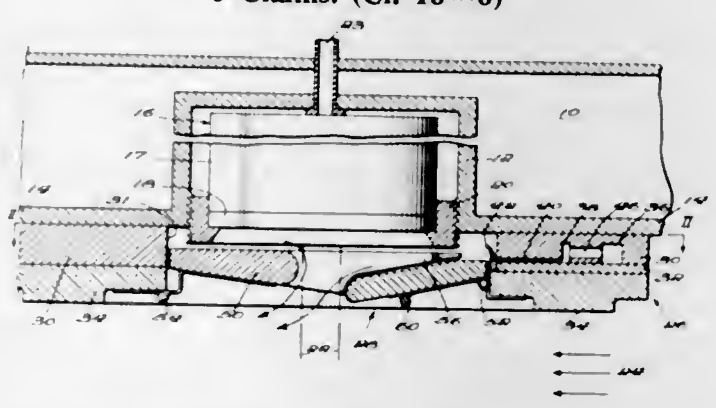

An array of spinnerets equipped with swingably mounted enclosure flaps for confining a blanketing medium to zones adjacent the spinnerets.

3,398,430
EXTRUDER
Robert L. Miller, Barberton, Ohio, assignor to NRM Corporation, Akron, Ohio, a corporation of Ohio
Filed Sept. 1, 1966, Ser. No. 576,574
5 Claims. (Cl. 18—12)

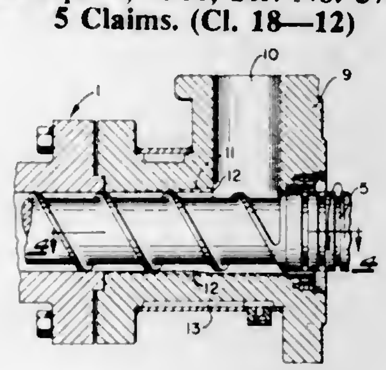

An extruder having a tapered bore adjacent the feed opening into which solid particles of plastic are wedged

as they are advanced by the feed screw, and circumferentially spaced apart splines on the wall of the tapered bore to resist turning of the plastic while it is compressed by the wall of the tapered bore.

3,398,431
LAMINATING EXTRUSION DIE
Herbert O. Corbett, Bridgeport, Conn., assignor to National Distillers and Chemicals Corporation, New York, N.Y., a corporation of Virginia
Filed Oct. 23, 1964, Ser. No. 406,136
7 Claims. (Cl. 18—13)

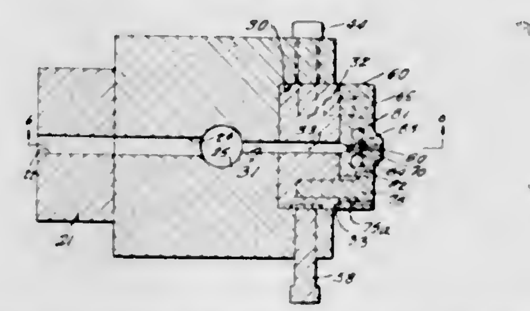

A lamination extrusion die having spaced die lips forming a discharge orifice. Each of the die lips contain axial channels which communicate with the spaced discharge orifice between them, with a first extruded product flowing through the spaced lips and second extruded products being introduced into the channels in the die lips to form laminated coatings on the plastic extruded through the main channel. The extrusion channels in the die lips may be longer or shorter than the main discharge space so that the edges of the laminated product will be of uniform composition. The channels in the die lips are fed from either the end of the die or from channels extending transversely of the main length of the die.

3,398,432
APPARATUS FOR THE EXTRUSION OF RECTANGULAR TUBES OF THERMOPLASTIC MATERIAL
John J. Quackenbush, Monroe, and Herbert O. Corbett, Bridgeport, Conn., assignors to National Distillers and Chemical Corporation, New York, N.Y., a corporation of Virginia
Filed June 28, 1965, Ser. No. 467,609
5 Claims. (Cl. 18—14)

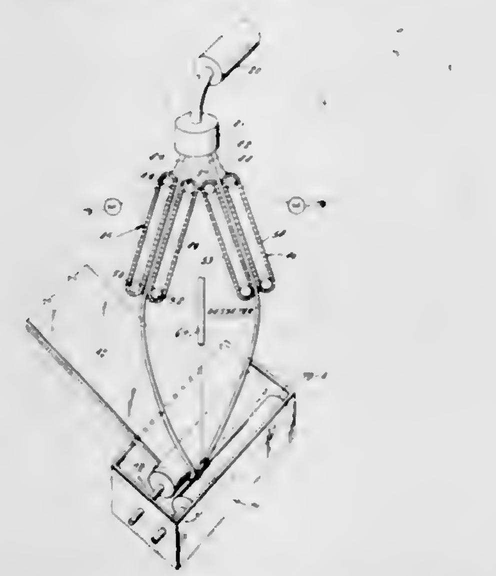

1. A plastic extrusion apparatus for the extrusion of thermoplastic film comprising, in combination, an extrusion die having a generally circular discharge orifice having a plurality of spaced notches, a plurality of spaced web guides arranged around the axis of said discharge orifice and adjacent the said discharge orifice and respectively aligned with a respective notch of said plurality of spaced notches; each of said web guides including gripping means connectable to a longitudinal portion of the film extruded through said discharge orifice, and a driving means connected to said gripping means for driving said gripping means away from said discharge orifice; each of said web guides diverging from one another.

3,398,433
SHOE MOLDING PRESS
Josef Vlček, Bohuslav Fimbinger, and Jiri Pavelka, Gottwaldov, Czechoslovakia, assignors to Zavody presneho strojirenstvi Gottwaldov, narodni podnik, Gottwaldov, Czechoslovakia
Filed July 8, 1965, Ser. No. 470,508
Claims priority, application Czechoslovakia, July 9, 1964, 3,960/64
1 Claim. (Cl. 18—17)

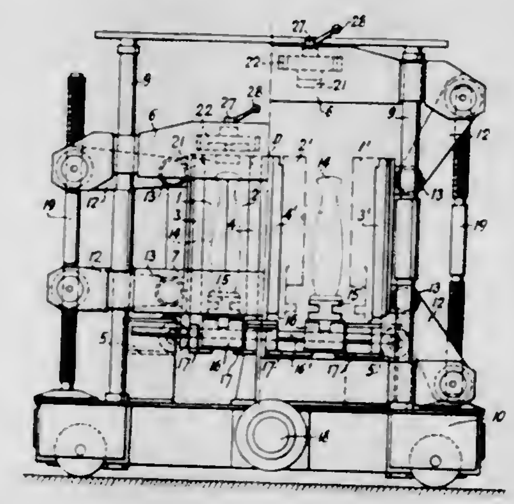

A molding press for rubber boots in which the two parts of a shaft mold are moved horizontally toward each other against a core or last by a toggle linkage, and the sole part of the mold is simultaneously moved toward the core at right angles to the direction of the shaft mold movement while free to move in that direction, and is provided with a clamping arrangement for fixing the position of the sole part in the closed mold.

3,398,434
VACUUM FORMING APPARATUS
John Alesi, Jr., and John A. Alesi, Los Angeles, Calif., assignors to Formex Manufacturing Inc., Santa Monica, Calif., a corporation of California
Continuation-in-part of application Ser. No. 248,596, Dec. 31, 1962. This application Dec. 7, 1965, Ser. No. 512,164
13 Claims. (Cl. 18—19)

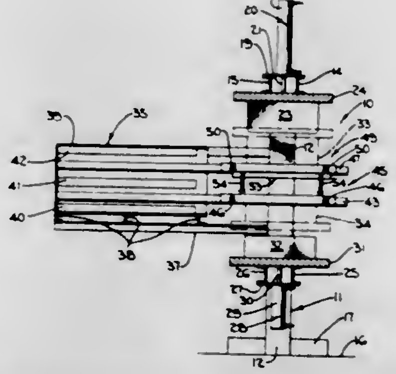

A method and apparatus for forming two sheets of heat-fusible plastic into a hollow structure and concurrently fusing the edges of each sheet together in a substantially continuous seam. First and second frame means support the edges of the heat-fusible plastic sheets and are moved by transfer means between an oven and first and second mold halves. The mold halves are formed with

complementary edges inwardly of which are defined mold cavities that cooperate to define the shape of the hollow structure. A vacuum is applied between the heated sheets and their respective mold cavities to draw the sheets into the mold cavities, with the mold halves then being urged together to cause the heated sheets to be fused under pressure in a seam. Air may be circulated within the space between the formed plastic sheets during the forming operation to thereby accelerate hardening of the plastic sheets. The edges of the mold halves may be formed with completmentary pockets that squeeze more of the material of the plastic sheets inwardly of the edges than is squeezed outwardly of the edges so as to increase the strength of the bond between the plastic sheets and also providing an extremely thin flash. To expedite formation of the seam, the edge portions of the mold halves may be provided with auxiliary heating elements. To prevent the heated upper and lower plastic sheets from mutual contact and consequent sticking together, air may be forced therebetween. Alternatively, the lower sheet may be heated to a higher temperature than the upper sheet or the lower sheet may be thinner than the upper sheet whereby such lower sheet will sag farther downwardly than the upper sheet.

3,398,435
METHOD AND APPARATUS FOR MOLDING PLASTICS
Robert Nouel, Villejuif, Val-de-Marne, France, assignor to Inventions Finance Corporation, a corporation of Delaware
Application June 18, 1963, Ser. No. 289,173, now Patent No. 3,241,192, dated Mar. 22, 1966, which is a continuation-in-part of applications Ser. No. 89,254, Feb. 4, 1961, Ser. No. 171,878, Feb. 2, 1962, Ser. No. 206,507, June 29, 1962, Ser. No. 273,144, Apr. 15, 1963, and Ser. No. 273,145, Apr. 15, 1963. Divided and this application Oct. 22, 1965, Ser. No. 520,538
4 Claims. (Cl. 18—30)

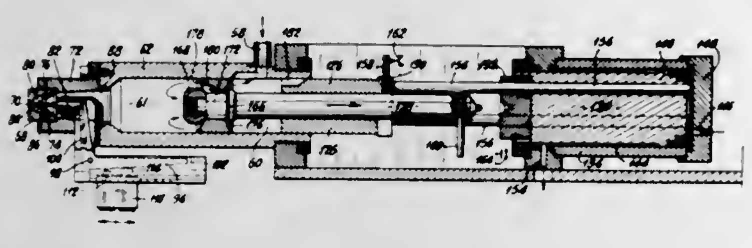

A molding apparatus comprising an injection vessel with an injection nozzle discharge means positioned at one end of the vessel with piston means having a one-way flow passage slidable in the vessel to form an injection chamber and a transfer chamber. A scavenger piston is disposed rearwardly of the piston means and an extrusion screw means continuously injects plasticized molding material into the vessel. There are rod means operatively connected to the piston means and the scavenger piston and a hydraulic motor having movable piston means element therein is provided to actuate the piston means and the scavenger piston toward the injection nozzle discharge means.

3,398,436
AUTOMATIC REGULATOR VALVE FOR INJECTION MOULDING
Robert Nouel, Villejuif, France, assignor to Inventions Finance Corporation, a corporation of Delaware
Continuation-in-part of applications Ser. No. 171,878, Feb. 8, 1962, 273,144, Apr. 15, 1963, and 289,173, June 18, 1963. This application Mar. 22, 1966, Ser. No. 536,472
3 Claims. (Cl. 18—30)

The disclosure provides an automatic regulator valve for injection moulding comprising an injection nozzle having an orifice and adapted to be secured to an injection chamber, a valve member slidable to open and close said orifice, said valve member being formed as a hollow needle providing a conduit for flow of moulding material from the injection cylinder to said nozzle, said valve member having cross-sectional areas of different size and acting as a differential piston on which the pressure of the moulding material causes movement of the valve member in one direction, fluid pressure control

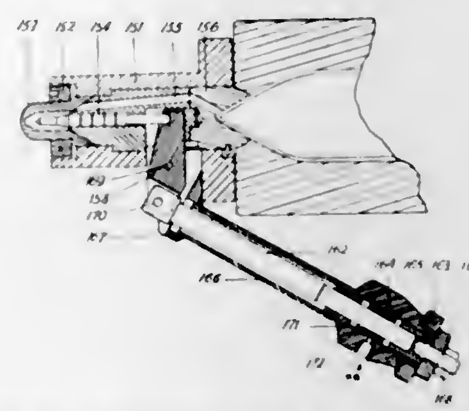

means operatively associated with the valve member for moving the valve member in the opposite direction, said control means including a lever connected to the valve member by a yoke bearing against an abutment collar surrounding the valve member, and through which said yoke the valve also slides, and an adjustable presetting means operatively associated with said control means for presetting the control means to limit the opening movement of said valve member to a selected distance.

3,398,437
FALLER BAR FOR FIBRE PREPARATION MACHINE
William Rennie Stewart, Strathmartine, by Dundee, and David Bruce Stewart, Newtyle, Scotland, assignors to Wm. R. Stewart & Sons (Hackelmakers) Limited, Dundee, Scotland, a corporation of the United Kingdom
Filed May 31, 1966, Ser. No. 554,157
Claims priority, application Great Britain, May 31, 1965, 23,070/65
3 Claims. (Cl. 19—129)

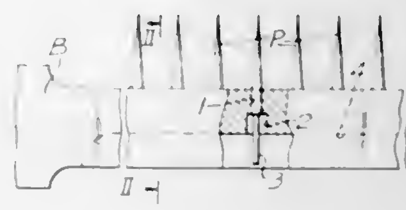

A faller bar having pin holes of a length less than the depth of the faller bar extending from the upper surface of the bar and terminating in a longitudinal recess within the bar short of the underside thereof, and pins mounted in said holes and having shank end portions exposed by extending into the longitudinal recess. Each pin hole has a lower counterbore portion which registers with the longitudinal recess in the underside of the faller bar.

3,398,438
NAPKIN
Louis Fried, 280 Prospect Ave., Hackensack, N.J. 07601, and Alan J. Fried, 1359 Sussex Road, Teaneck, N.J. 07666
Filed Apr. 15, 1966, Ser. No. 542,860
2 Claims. (Cl. 24—7)

The present invention relates to paper napkins or the like having adhesive means thereon for securing the napkin to the clothing of a person while eating. Means is provided for preventing the adhesive portion from adhering to other portions of the napkin when in folded position, and when the napkin is unfolded the adhesive

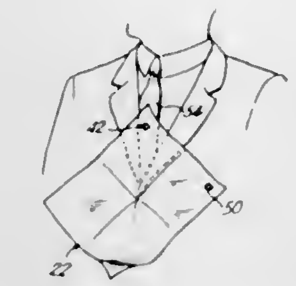

means is automatically exposed for adherence to the desired object.

3,398,439
NAPKIN
Louis Fried, 280 Prospect, Hackensack, N.J. 07601, and Alan J. Fried, 1359 Sussex Road, Teaneck, N.J. 07666
Filed Apr. 17, 1967, Ser. No. 631,441
10 Claims. (Cl. 24—7)

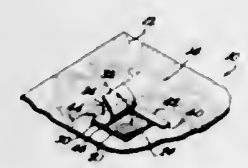

A napkin is provided with adhesive means on one face thereof defining a pressure-sensitive surface for attachment to the clothing of a user. In a first form of the invention, the adhesive means may comprise a piece of tape having a pressure-sensitive surface on both sides thereof, one side being adhered to the face of the napkin. In a second form of the invention, the adhesive means may comprise an area of the napkin having a pressure-sensitive adhesive thereon. Covering means is provided over the pressure-sensitive surface in the form of a separate piece of material having a non-adhesive outer surface facing away from the pressure-sensitive face on the napkin. This separate piece of material has a first elongated slit extending from one side edge thereof and terminating short of the opposite side edge thereof and being formed parallel with a third side edge thereof. A second slit of substantially less length intersects the first slit so that a portion of the covering means can be peeled away from the pressure-sensitive surface on the napkin to expose the pressure-sensitive surface while inhibiting complete removal of the covering means. In a further modified form of the invention, the covering means is provided with a pair of spaced parallel slits each of which extends substantially parallel with and in spaced relationship to a pair of opposite side edges of the covering means, these slits extending from a third side edge of the covering means to a point spaced from a fourth side edge of the covering means.

3,398,440
HOSE CLAMP
Karl Erik Lennart Bergstrom, Scheelegatan 28, Stockholm K, Sweden
Filed July 5, 1966, Ser. No. 562,869
3 Claims. (Cl. 24—274)

An improved hose clamp wherein a steel strip is bent to annular shape with the ends of the strip overlapping. The outer end of the overlapped strip is provided with transverse grooves to cooperate with a worm located rotatably in a sleeve but axially unslidable therein. The inner strip end is secured to the sleeve spaced from the worm and the outer strip and moves between such inner strip and the worm when the worm is rotated. The longitudinal

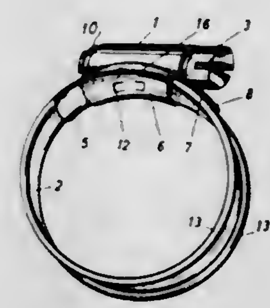

edges of the strip are turned upwardly and outwardly so that when the clamp is tightened upon a hose such longitudinal edges of the strip will not damage the hose.

3,398,441
METHOD OF PRODUCING CRIMPED FIBROUS MATERIAL
Naoyoshi Adachi, Tokyo, and Yoshiaki Murono, Fuji-shi, Japan, assignors to Asahi Kasei Kogyo Kabushiki Kaisha, Kita-ku, Osaka, Japan, a corporation of Japan
Filed Dec. 1, 1966, Ser. No. 598,409
Claims priority, application Japan, Dec. 3, 1965, 40/74,186, 40/74,187
12 Claims. (Cl. 28—72)

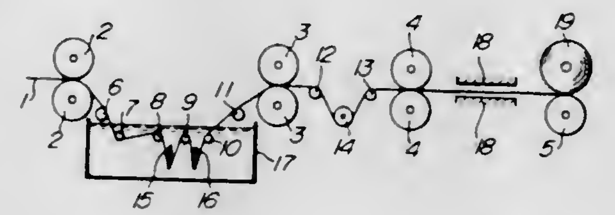

A method for producing an improved crimped fibrous material comprising passing a fiber-formable polymer film over at least one edge crimping body under tension during or after subjecting the fiber-formable polymer to a uniaxial stretching step, splitting the film into crimpable fibrous material, then generating crimps in said fibrous material by heating or swelling.

3,398,442
METAL ABRASIVE SHEET AND A METHOD OF MAKING SAME
Albert O. Palmer, Ridgefield, Conn., assignor to Gar Precision Products, Inc., Danbury, Conn., a corporation of Connecticut
Filed Mar. 4, 1965, Ser. No. 437,062
10 Claims. (Cl. 29—78)

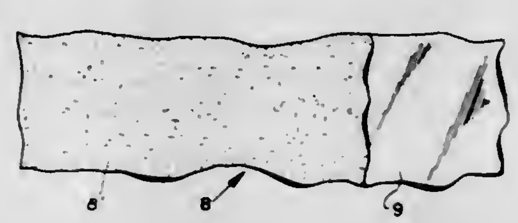

1. The method of making an abrasive metal sheet comprising the steps of covering a sandpaper of desired grit size with a flexible matter so as to obtain a negative imprint of the sandpaper grit on said flexible matter, electroforming a metal sheet on the so negatively gritted surface, and stripping the so produced metal sheet from the last mentioned surface.

3,398,443
METHOD OF MANUFACTURING AN ASSEMBLY OF FRICTION ELEMENTS
Jacques Jean Caubet, Saint-Etienne, France, assignor to Automobiles M. Berliet, Lyon, Rhone, France, and Hydromecanique et Frottement, Saint-Etienne, Loire, France
No Drawing. Filed Oct. 4, 1965, Ser. No. 492,863
Claims priority, application France, Apr. 12, 1965, 12,868
5 Claims. (Cl. 29—149.5)

A steel element having a layer of iron carbide and iron nitride over a layer for diffusing nitrogen into the steel and a cuprous metal element having a layer containing sulfur and nitrogen are movable relative to each other. At least one of said elements is provided with a plurality of flutings inclined to the direction of relative movement between the elements.

3,398,444
HARD TOOTH GEARS AND METHOD OF MAKING
Alfred S. Nemy, Lyndhurst, Ohio, assignor to TRW Inc., Cleveland, Ohio, a corporation of Ohio
Filed Jan. 18, 1966, Ser. No. 521,257
6 Claims. (Cl. 29—159.2)

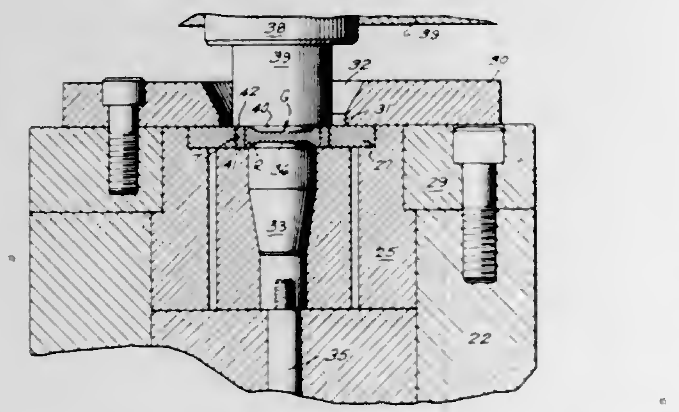

A radially toothed gear and the method of making which has the steps of carburizing a gear blank at a temperature of about 1550° F. to 1800° F. to a desired case depth, die forging of the blank into a gear at a forging temperature from 1400° F. to 1700° F. by radial extrusion of the blank thereby providing a gear which has grain flow lines defining the sides of the teeth which are relatively more compressed in the root areas than in other areas of the teeth and which has a hardenable case of selective depth which is thicker at the crown and sides of the radial teeth than at the root areas, thereafter quenching the forged gear and tempering at temperatures of around 300° F., and finally finish machining the gear.

3,398,445
JACK TIP INSERTING TOOL
John V. Westendorf, Annapolis, and George H. Meyerhoff, Severna Park, Md., assignors, by mesne assignments, to the United States of America as represented by the Secretary of the Army
Filed Apr. 22, 1966, Ser. No. 546,132
9 Claims. (Cl. 29—203)

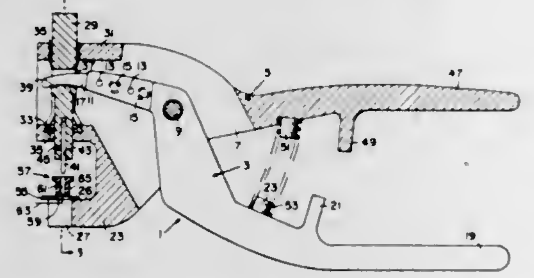

A mechanical advantage jack tip inserting tool in which a first lever has a fixed anvil on one surface and a reciprocable anvil on another and opposed surface for inserting a jack tip into a bore of a board by a second lever that is pivotably connected to the first lever.

3,398,446
DEVICE FOR APPLYING TRACTION-AUGMENTING STUDS IN TIRES FOR VEHICLES AND THE LIKE
Bengt Sigvard Karlsson, Enskede, Sweden, assignor to Sandvikens Jernberks Aktiebolag, Sandviken, Sweden, a corporation of Sweden
Continuation of application Ser. No. 396,091, Sept. 14, 1964. This application Feb. 16, 1966, Ser. No. 527,892
Claims priority, application Sweden, Sept. 17, 1963, 10,137/63
5 Claims. (Cl. 29—212)

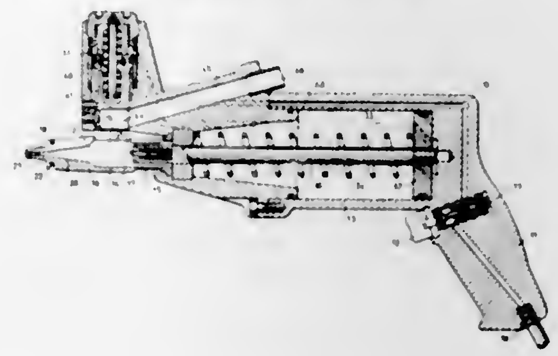

An apparatus for inserting studs in previously provided bores in the rubber tread of a common standard tire includes (1) a pneumatically operated, tubular and radially expandable device for temporarily widening the bore in the tire, (2) a first mechanism for feeding studs from a source thereof into the tubular expandable device, and (3) a second mechanism for forcing a stud through the tubular expandable device and into the transiently widened bore. Said tubular device comprises a tubular sleeve and a nozzle (for insertion into the bore) constituted by a plurality of resiliently flexible fingers integral with the tubular sleeve.

3,398,447
METHOD OF MAKING A DRAFTSMAN'S STRAIGHTEDGE
Gregory S. Dolgorukov, Ferndale, Mich. (407 Fisher Bldg., Detroit, Mich. 48202)
Continuation-in-part of abandoned application Ser. No. 307,283, Sept. 5, 1963. This application May 25, 1967, Ser. No. 586,570
3 Claims. (Cl. 29—407)

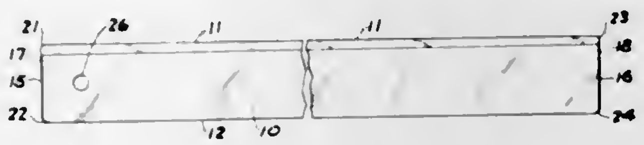

1. A method of making a draftsman's straightedge to attain therein full transparency, functional effectiveness and durability, said method comprising providing a cast and annealed sheet of transparent acrylic plastic material of approximately 3/16" thick with its flat top and bottom surfaces having been cast against polished glass plates to attain optical flatness, sawing an elongated rectangular piece of said material to the predetermined size of the straightedge with machining allowance, milling the sides and the ends of said piece to provide thereon two straight, smooth and squared longitudinal guiding surfaces and two squared ends meeting at four corners, rounding all four corners to eliminate sharp vertical line edges thereat resulting from the milling operation, providing a combined point-guiding and triangle-locating side surface on the piece by beveling at 20°–25° angle one of the longitudinal sides thereof to bring the squared portion thereof down to .100"–.120", smoothing the beveled surface to eliminate tool marks thereon, relieving for approximately .035" the sharp end edges of the piece at both top and bottom surfaces thereof to eliminate the sharp line edges thereat and the curved sharp line edges resulting from rounding the corners, chamfering for approximately .010" all sharp line edges formed along the squared longitudinal side surfaces of the piece by intersection of milled surfaces at 90° angles and of the side guiding surface with the top bevel surface, and polishing the beveled, relieved and chamfered surfaces to restore luster and surface tension therein.

3,398,448
PROCESS FOR COATING STEEL WITH NICKEL
Charles B. Goodrich, Charles E. Manilla, Keith E. Creager, and Harper J. Rudge, Huntington, W. Va., assignors to The International Nickel Company, Inc., New York, N.Y., a corporation of Delaware
No Drawing. Filed Sept. 12, 1966, Ser. No. 578,469
11 Claims. (Cl. 29—420.5)

1. The process for producing a metal-coated steel sheet which comprises cleaning a substantially flat face of a steel primary mill shape, copper coating said cleaned steel face, applying a layer of powder containing at least one metal having a melting point at least about 2200° F. upon said cleaned and copper-coated steel face, covering said metal powder layer with a metal foil having a composition matching that of said metal, hot pressing said metal powder layer upon said steel face to achieve substantial densification of said powder layer and adherence of said powder layer to both said foil and said steel shape, thereafter heating said steel shape to a hot rolling temperature and hot rolling said metal coated steel shape to sheet having upon a face thereof a substantially completely densified metal coating metallurgically bonded to a steel base.

3,398,449
METHOD OF MAKING A T-SQUARE
Gregory S. Dolgorukov, Ferndale, Mich. (407 Fisher Bldg., Detroit, Mich. 48202)
Continuation of abandoned application Ser. No. 288,577, May 15, 1963, which is a continuation-in-part of application Ser. No. 178,868, Mar. 12, 1962, now Patent No. 3,103,071, dated Sept. 10, 1963. This application Oct. 13, 1966, Ser. No. 586,568
7 Claims. (Cl. 29—529)

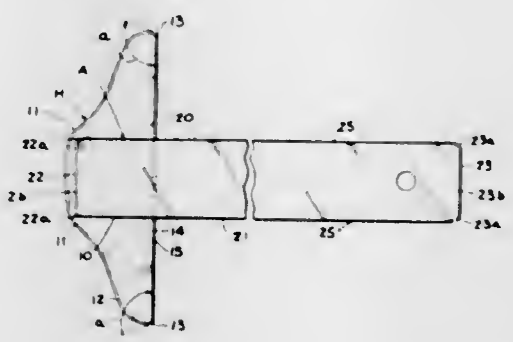

1. In a method of making a T-square to attain full transparency of its arm, functional effectiveness and to prevent rapid breakage thereof in use, the steps of providing a cast and annealed sheet of transparent acrylic plastic material, with its surfaces having been cast against polished glass plates to attain optical flatness of said surfaces, sawing an elongated strip of said material, milling the elongated sides and at least one end of said strip to square and smoothen the sides of said strip and thus to provide smooth guiding surfaces, chamfering all sharp line edges formed on said strip by milling for approximately .020" to remove the material thereof subject to initiations of minutes cracks therein and growing of said cracks inwardly of the arm therefrom, and polishing the chamfered edges to restore the luster and the surface tension therein to prevent origination and growing of minute cracks from the narrow surfaces and from the double edges produced by such chamfering.

3,398,450
PROCESS FOR MAKING WOUND MAGNETIC CORE
Vadim Subovici, Blvd. Republicii 58, Bucharest, Rumania
Continuation-in-part of application Ser. No. 498,816, Oct. 20, 1965. This application Nov. 15, 1967, Ser. No. 688,295
Claims priority, application Rumania, Nov. 24, 1964, 48,821; Nov. 25, 1964, 48,828
4 Claims. (Cl. 29—605)

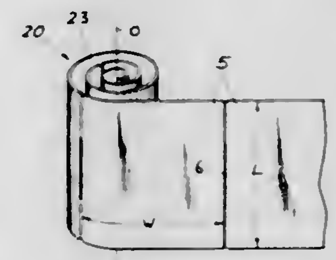

An elongate strip of magnetically permeable sheet material, e.g. steel, preferably rolled so as to have its grains oriented in longitudinal direction, is cut into sections of equal length L which are then successively coiled about a common axis parallel to their dimension L to form a spirally wound cylinder. The sections may be interconnected, before or after winding, by welding or soldering and may be wound with the turns of the spiral spaced apart to leave axially extending voids for the passage of a cooling fluid.

3,398,451
SPRING OPENED NIPPER
Torsten F. Angguist, Jamestown, N.Y., assignor to Crescent Niagara Corporation, Buffalo, N.Y.
Filed June 27, 1966, Ser. No. 560,543
3 Claims. (Cl. 30—186)

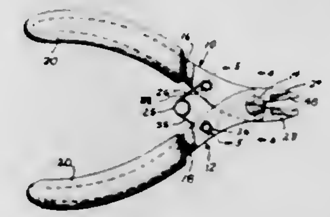

The arm members of a cutting plier are offset and nested to provide coplanar handle portions and side-by-side cutting jaws and a torsion spring is nested between the arm members in such position as to place it out of the way when the plier is operated.

3,398,452
DRAFTING-DIGITIZING APPARATUS
Charles Hubbard Little, Cleveland, and Waldo H. Kliever and Eugene L. Wiemels, Cleveland Heights, Ohio, assignors to Universal Drafting Machine Corporation, Bedford Heights, Ohio, a corporation of Ohio
Continuation of application Ser. No. 262,590, Mar. 4, 1963. This application Mar. 2, 1966, Ser. No. 540,123
31 Claims. (Cl. 33—18)

1. In a drafting machine: a table for supporting an article to be marked; first and second beams; means attaching said beams to said table in parallel spaced relation

to one another; a first movable assembly extending between and carried by said first and second beams; first and second individual digitally controlled signal responsive motor means on opposite ends of said assembly responsive for moving said first assembly back and forth on said beams; a second movable assembly on said first movable assembly, third individual digitally controlled signal responsive motor means on said second assembly for moving said second assembly back and forth on said first assembly; stylus means on said second movable assembly for

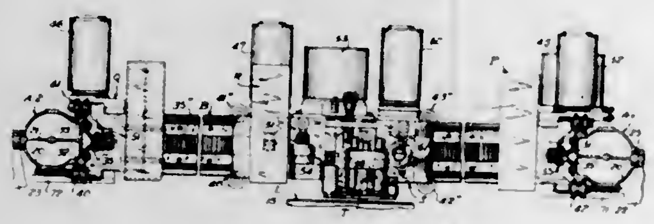

marking an article supported on said table; and electronic control means for controlling the energization of said motor means whereby said stylus means is caused to traverse the article supported on said table in a predetermined manner, said control means comprising an input source of digital pulse information, a table source of digital pulse information, pulse separator means for combining digital pulses from said sources of information and for time-separating said pulses, and circuit means for interconnecting said sources of pulse information, said pulse separator means and said motor means.

3,398,453
METHOD AND APPARATUS FOR ALIGNING WHEELS AND AXLES
Charles L. Hurst, Dayton, Ohio, assignor to Manufacturers Machine Company, Dayton, Ohio
Continuation of application Ser. No. 158,057, Dec. 8, 1961. This application Mar. 22, 1965, Ser. No. 445,300
20 Claims. (Cl. 33—46)

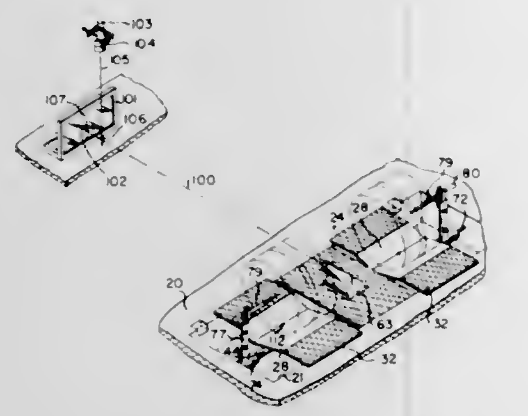

1. In a device for detecting and indicating the position of trailer axles with respect to the true aligned position thereof; a pair of spaced carriages adapted for receiving the wheels of a trailer, means supporting the carriages for free movement in the fore and aft direction of the trailer, a projector between the carriages for projecting a beam of light forwardly of the trailer, support means supporting the projector and connected with said carriages so that relative movement between said carriages in the fore and aft direction will turn the projector about a vertical axis, said support means including centering means operable for centering the projector between the wheels, and means for indicating the horizontal angularity between the beam of light from said projector and the longitudinal axis of the trailer.

3,398,454
AUTOMATIC SYSTEM FOR WEB LENGTH MEASUREMENT
Solomon Steinberg, 108—20 68th Road, Forest Hills, N.Y. 11375
Continuation-in-part of application Ser. No. 186,766, Apr. 11, 1962. This application Jan. 29, 1965, Ser. No. 428,929
9 Claims. (Cl. 33—132)

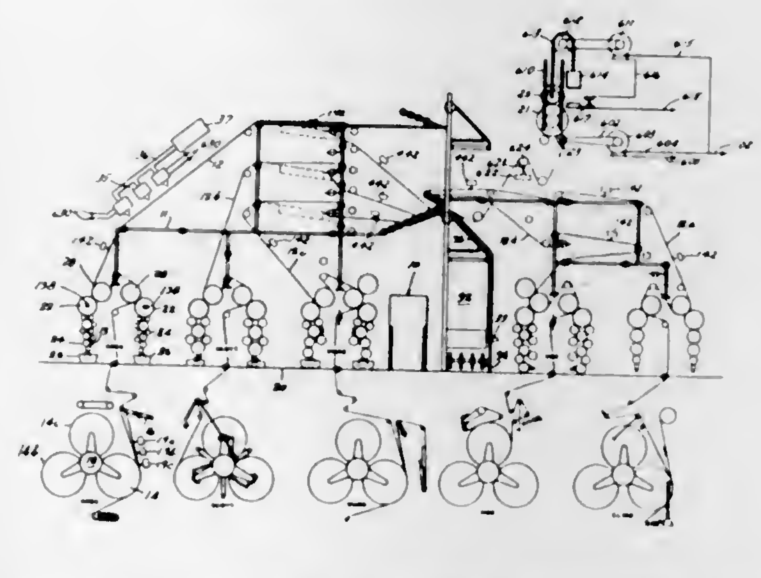

Automatic system for web length measurement for use with a continuous web treating machine utilizing a plurality of web portions with interconnection means for said web portions, and rider roll means; in which system printing counters record web breaks, interconnections, rider roll elevation, and total length of each web portion and after a plurality of such webs are concurrently printed or treated and grouped, said counters record incomplete, complete, and perfect so grouped copies, and having preset devices for actuating rider roll elevation, or for stopping this machine after a given measurement.

3,398,455
APPARATUS FOR COPYING BODY CONTOUR
Kai Martin Edvard Setälä, Uudenkaupungintie 8, Helsinki, Finland
Filed June 30, 1965, Ser. No. 468,329
Claims priority, application Finland, July 6, 1964, 1,443/64
13 Claims. (Cl. 33—174)

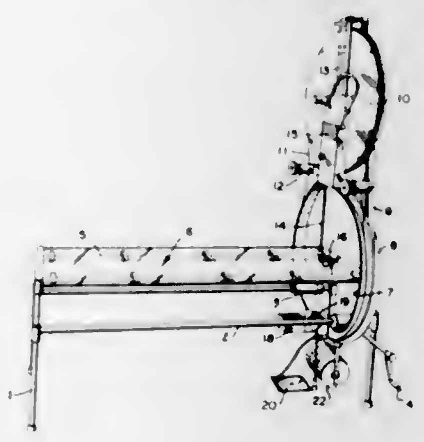

A rotatable frame is provided to rotate about an axis of a horizontal examination table; at the outer end of the frame, a traverse rotatable copying base is mounted in such a manner to maintain a constant angular attitude to the horizontal plane of the table in all positions of the rotatable frame; a sensing rod which is slidably supported on the frame and extends from the copying base toward the table, follows the contour of the patient's body lying on the table; and a recording instrument attached to the sensing rod records the contour on the copying base.

3,398,456
MEASUREMENT GAUGES FOR CARTRIDGE CASES
Wilbur H. Cooper, 612 E. 20th, Houston, Tex. 77008
Filed Sept. 26, 1966, Ser. No. 581,859
2 Claims. (Cl. 33—174)

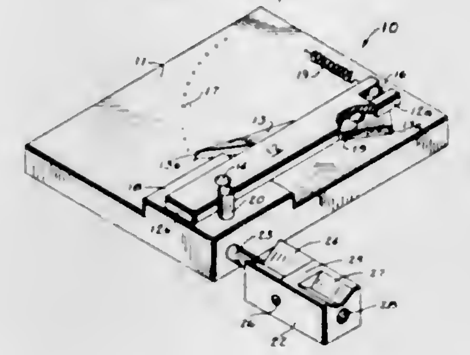

A "go-no go" type of measuring device is disclosed for providing comparative indications of the degree of eccentricity of the neck bore of an unloaded cartridge case. An upright post and two pivotally mounted interconnected levers are arranged on a base so that rotation of a cartridge case neck receiving the post will be effective to move one of the levers through an arcuate path related to the wall thickness of the neck and produce a corresponding, but amplified, motion of the other lever which is sufficient to determine the relative eccentricity of the cartridge case neck. Means are also provided to allow relative length measurements to be made with the disclosed device.

3,398,457
PROCESS AND APPARATUS FOR MOISTURE CONDITIONING BATCHES OF SEED COTTON AND THE LIKE
William C. Pease III, Columbus, Ga., assignor to Lummus Cotton Gin Company, a corporation of Georgia
Filed July 8, 1966, Ser. No. 563,898
9 Claims. (Cl. 34—10)

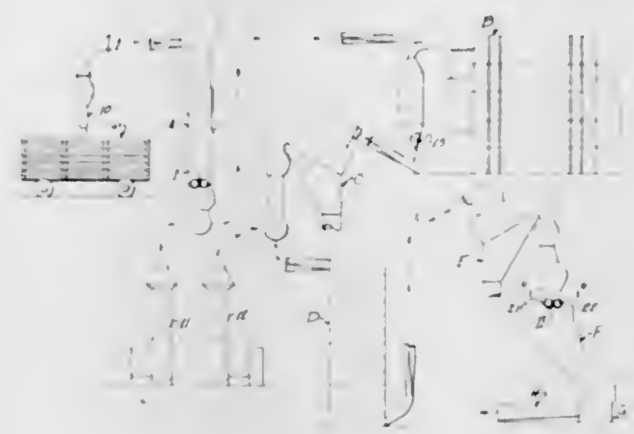

A process and apparatus for controlling drying and moisture conditioning apparatus for seed cotton and the like, which utilizes a pneumatic controller circuit. The moisture condition of the cotton or similar material is tested continuously by electrical transducers at one or more points as it is passed to and through the drying apparatus. The signal resulting is utilized by the control circuit to vary the temperature of the air within the drying apparatus and thus control the drying condition in the apparatus. When the gin "gins down" at the end of a batch, the input to the control circuit is switched from the moisture sensing transducers to a temperature sensing transducer, and the circuit is altered so as to maintain the temperature at a constant level corresponding to that which obtained in the drying apparatus at the end of the preceding batch.

3,398,458
METHOD AND MEANS FOR THE INTRODUCTION OF FLUIDS INTO A ROTATING CONTAINER
Bernard Quanquin, Grand-Couronne, and Yves Berquin, Paris, France, assignors to Potasse & Engrais Chimiques, Paris, France
Filed Dec. 2, 1966, Ser. No. 598,706
Claims priority, application France, Mar. 25, 1966, 54,934
12 Claims. (Cl. 34—33)

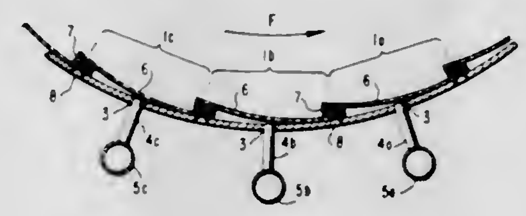

1. In a process for the introduction of fluid into a bed of material being tumbled in a cylinder having its cylindrical surface rotating about its longitudinal axis the improvement comprising injecting said fluid from an external source through said cylindrical surface into said bed of material, said injecting being conducted through at least one of a plurality of normally substantially closed valves in said cylindrical surface, at a point where said valve is covered in the interior of said cylinder with said bed of material, and wherein said injecting of said fluid forces said normally substantially closed valve to open, and the pressure of said fluid prevents said bed of material from trickling out of said valve, whereby a fluid distributor for said fluid in the interior of said bed of material is avoided, and improved contact between said fluid and said bed of material is obtained.

3,398,459
CLOTHES DRYER CONTROL
Willie H. Best, Columbia, Charley L. Thompson, Jr., Cayce, and Eugene C. Woodward, Jr., Columbia, S.C., assignors to Lear Siegler, Inc., a corporation of Delaware
Filed Sept. 22, 1966, Ser. No. 581,379
3 Claims. (Cl. 34—43)

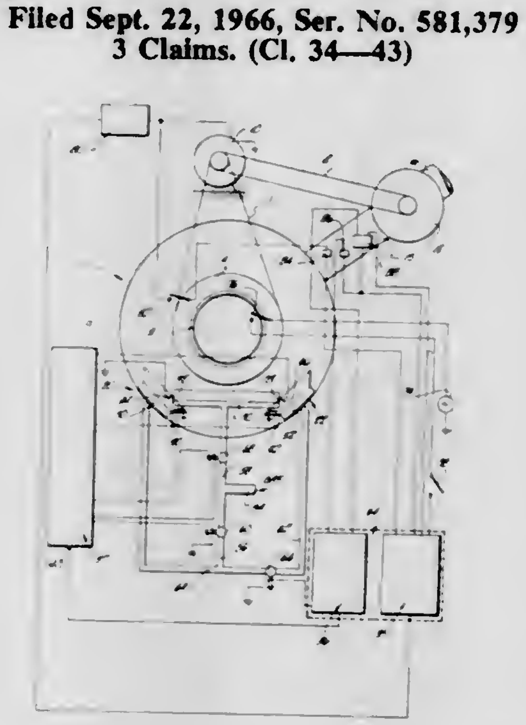

Two gas-fired infrared generators are disposed to direct infrared radiation into the upper interior of the dryer's drum. A first temperature sensor is coupled to one of the infrared generators to turn it off when a temperature increase resulting from the diminution of water vapor in the dryer's exhaust is sensed. A second temperature sensor is coupled to the infrared generators to deenergize the generators upon the sensing of a higher temperature resulting from the substantial absence of water

in the laundry. A cycle selector is operable to inactivate the drum and the dryer's blower as well as the infrared generators after the completion of a cycle. A temperature selector functions to prevent the generation of infrared radiation from one of the infrared generators.

3,398,460
ANTI-WRINKLE CYCLE FOR DRYERS WITH INTERMITTENT SIGNALING MEANS
Alvin J. Elders, St. Joseph, Mich., assignor to Whirlpool Corporation, Benton Harbor, Mich., a corporation of Delaware
Filed Sept. 26, 1966, Ser. No. 581,852
4 Claims. (Cl. 34—45)

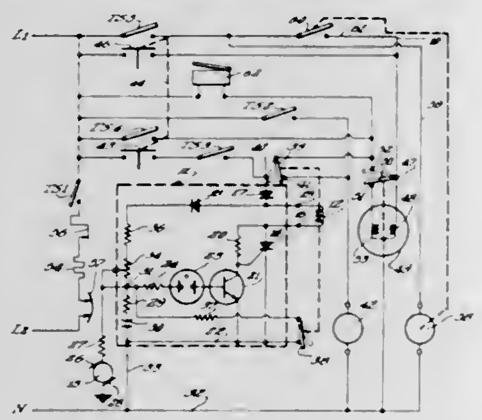

A control circuit for controlling the operation of a drying apparatus and for producing audible signals at periodic time intervals after the completion of the drying cycle. The apparatus includes a rotatable drum for receiving the fiber to be dried and means connected to the drum for rotating the drum. The control circuit includes means for energizing a drive motor connected to the drum and means for intermittently energizing the drive motor for short periods of time after completion of the initial drying cycle. Additionally, the control system includes signalling means which is energized for short periods of time each time the drive motor is energized after the drying cycle.

3,398,461
DRYER WITH ANTIWRINKLE CYCLE
Donald E. Janke, Benton Harbor, Mich., assignor to Whirlpool Corporation, Benton Harbor, Mich., a corporation of Delaware
Filed Sept. 26, 1966, Ser. No. 582,010
9 Claims. (Cl. 34—45)

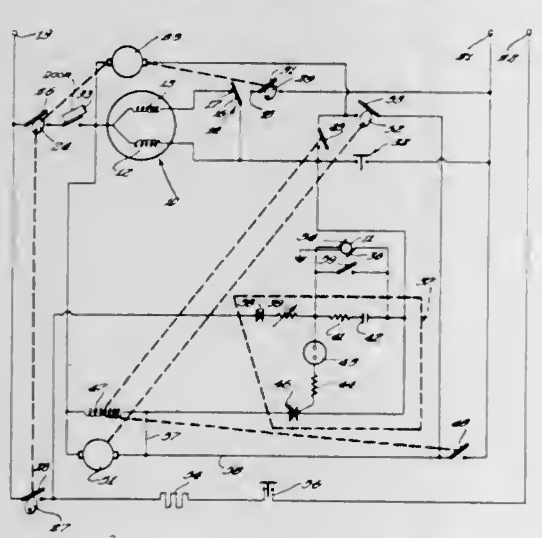

A control circuit for a clothes dryer having a drying operation followed by an antiwrinkle period of intermittent tumbling of the clothes load. The circuit includes a relay for automatically transferring control of the dryer following the drying operation from an electronic control circuit to a timer motor circuit to time the antiwrinkle period.

3,398,462
DRYER WITH ANTIWRINKLE CYCLE
Franklin C. Harter, Stevensville, Mich., assignor to Whirlpool Corporation, Benton Harbor, Mich., a corporation of Delaware
Filed Oct. 18, 1966, Ser. No. 587,552
7 Claims. (Cl. 34—45)

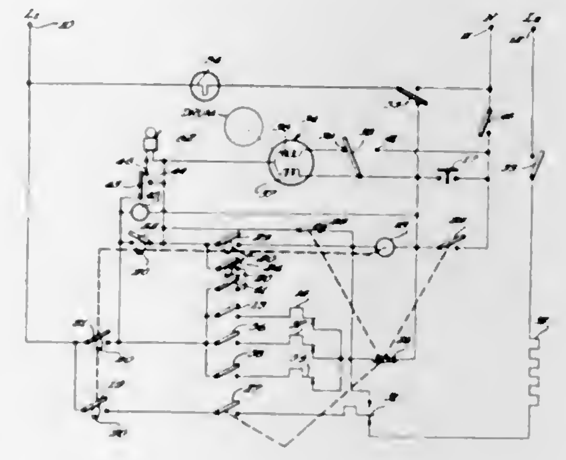

A clothes dryer having a control system to provide a plurality of different, selectively available, drying cycles each of which includes a terminal antiwrinkle period of intermittent rotation of the dryer drum to eliminate wrinkles in dried clothes. The control system automatically provides a different period of intermittent drum rotation in one special drying cycle to protect certain types of fabrics.

3,398,463
VACUUM CLOTHES DRYER
Chandley W. Lambert, Box 56, Lake Dallas, Tex. 75065
Filed Aug. 14, 1967, Ser. No. 660,307
5 Claims. (Cl. 34—92)

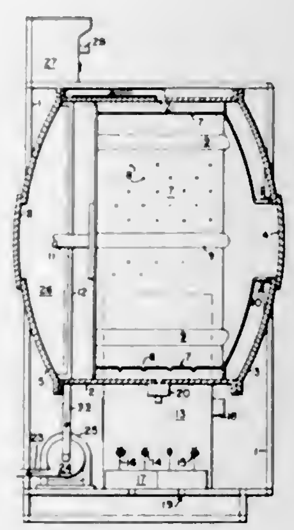

The invention comprises conical perforations in a slowly rotating basket in a vacuum drum. The basket is rotated by a sliding armature in a coil. The coil is controlled by an improved contacting device. An extension of the armature swings an arm carrying a pawl which turns a ratchet wheel loose on the basket shaft. A flat coiled spring connects the ratchet wheel to a crank wheel secured to the basket shaft. There is a dual heat unit for heat control.

3,398,464
SIEVE DRUM INSTALLATION
Gerold Fleissner, Egelsbach, near Frankfurt am Main, Germany, assignor to Anstalt fur Patentdienst, Vaduz, Liechtenstein
Filed Apr. 27, 1965, Ser. No. 451,275
Claims priority, application Switzerland, Apr. 29, 1964, 5,577/64
6 Claims. (Cl. 34—122)

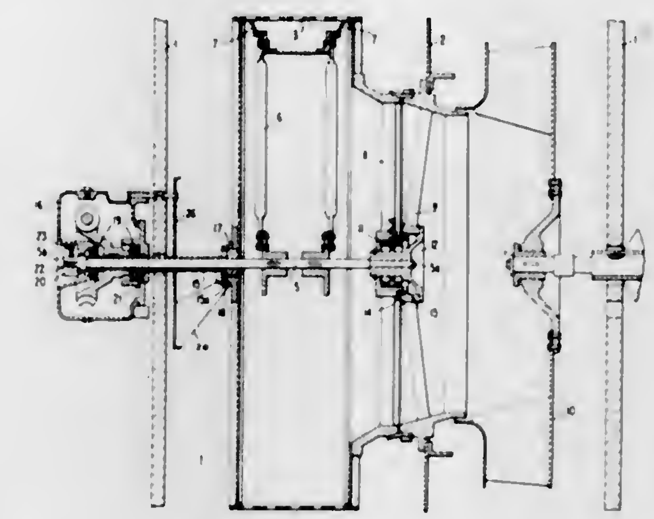

The present disclosure relates to a sieve drum installation which comprises a substantially closed chamber, at least one cylindrical sieve drum means rotatably disposed within said chamber, said sieve drum means having a fan side and a drive side, internal baffle means disposed within said sieve drum means and supported by a stationary shaft means axially positioned within said sieve drum means, drive means disposed within a drive housing for driving said sieve drum including a hollow drive shaft means disposed about said stationary shaft means, said housing separately accommodating said stationary shaft means and said hollow drive shaft means and positioned outside of the treatment chamber, and adjusting means operatively connected with the stationary shaft means providing for subsequent adjustment of the position of the said internal baffle plate means during rotation of said sieve drum means.

3,398,465
CLOTHES DRYER WITH FABRIC DEFLECTING BULKHEAD
Lewis L. Miller, Benton Harbor, and Joseph P. Lux, St. Joseph, Mich., assignors to Whirlpool Corporation, Benton Harbor, Mich., a corporation of Delaware
Filed May 9, 1966, Ser. No. 548,749
6 Claims. (Cl. 34—133)

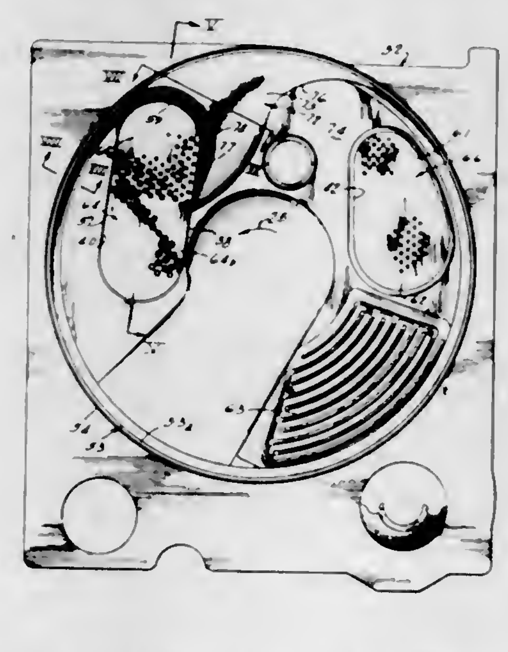

A clothes dryer having a drum for tumbling clothes, the drum being open at one end confronting a stationary wall of the dryer. The wall includes a deflector to deflect clothes being tumbled away from an opening in the wall through which heated air is supplied to the drum.

3,398,466
SLOT APPARATUS FOR HIGH VELOCITY GAS TREATMENT OF MOVING WEBS
Ernest Charles Brown, Danvers, Mass., assignor to Wolverine Corporation, Cambridge, Mass., a corporation of Massachusetts
Filed Dec. 22, 1966, Ser. No. 603,991
1 Claim. (Cl. 34—160)

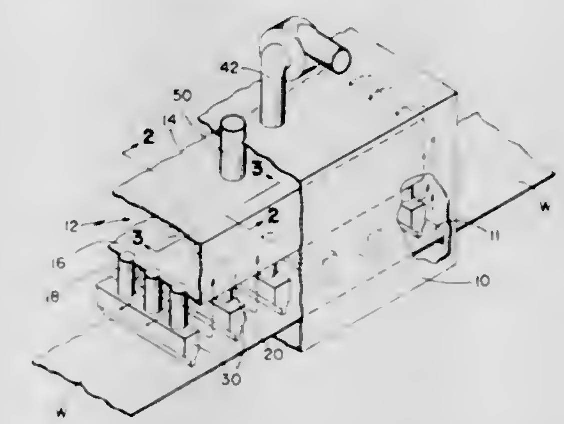

A multiple cross slot apparatus for high velocity gaseous surface treatment of moving wide webs has for each cross slot an individual separate cross plenum tube of small cross-sectional area co-extensive in length with each cross slot. The cross tubes are fed from a common upstream master plenum chamber of large cross-sectional area through rows of laterally spaced feed tubes connecting the master plenum chamber with each cross tube so that gases emitted from the slots may be exhausted not only laterally through spaces between the cross tubes but also both laterally and longitudinally through spaces between the feed tubes.

3,398,467
PARALLEL TUBE GASEOUS JET APPARATUS WITH MULTISIZE TUBE BORES
Ernest C. Brown, Danvers, Mass., assignor to Wolverine Corporation, Cambridge, Mass., a corporation of Massachusetts
Filed June 14, 1967, Ser. No. 646,011
5 Claims. (Cl. 34—233)

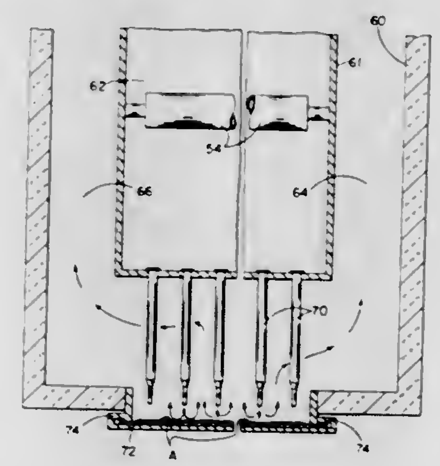

In tube jet dryers having a pattern of parallel tubes extending downwardly from a plenum for directing high velocity gaseous jets onto a layer of particulate material being advanced transversely beneath the tube orifices, and where the tubes are given substantial length in order to provide exhaust passageways of large enough cross-sectional area to reduce the velocity of the exhausting gases sufficiently to prevent detrimental removal of particulate

material to the exhaust system from the layer being treated, horsepower requirements for maintaining jet orifice exit velocities at or near the maximum as determined only by the requirement of causing no detrimental particle removal to the exhaust system, are substantially reduced by giving the tubes enlarged cross-sectional bore areas in their major upper section while retaining cylindrical bores of smaller cross-sectional area extending for a distance of approximately four times their diameter upwardly from the orifice ends so as not to change the flow characteristics of the jets beyond the orifices from those produced by tubes having the same orifice bore diameters but having bores of uniform diameter throughout their lengths.

3,398,468
BUILT-IN STRETCHABLE ELASTIC SHOE SOLE COVER
Dorothea M. Weitzner, 8 E. 62nd St., New York, N.Y. 10021
Filed Oct. 13, 1966, Ser. No. 586,399
6 Claims. (Cl. 36—2.5)

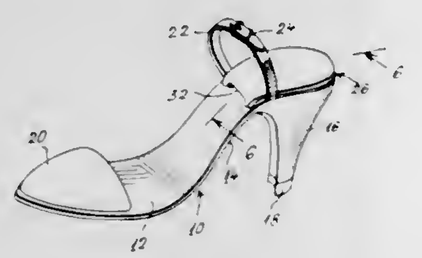

A stretchable elastic cover for the sole of a shoe, the cover being hidden from view when not in use. The cover is readily removed from the sole of the shoe and readily adjusted so as to extend from its attachment to the heel portion to engagement with the sole portion of the shoe so as to prevent admission of moisture to the sole portion of the shoe. The cover is under tension when covering the sole portion of the shoe. The cover has a stretchable body with a flange adapted to be slipped over the toe portion of the shoe for interlocking the cover with the toe portion.

3,398,469
CUSHIONED SHOE INNERSOLE CONSTRUCTION
Ezio Bressan, 1526 Glenking Lane, Alliance, Ohio 44601
Filed Dec. 8, 1967, Ser. No. 689,183
8 Claims. (Cl. 36—11.5)

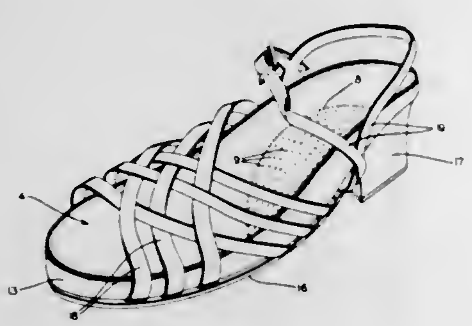

An innersole construction for shoes having a three-layer lamination comprising a shaped sole member composed of a cork and Juta mixture bound together by rubber and die cast to conform to foot contours, a thin sheet foam rubber intermediary, and a foam rubber arch insert stitched to a ventilated leather covering having a downturned edge extending under the shaped sole member and cemented thereto make a complete unit.

3,398,470
SNOW REMOVAL DEVICE
Stuart D. Pool, Naperville, and Edward Svereika, Chicago, Ill., assignors to International Harvester Company, Chicago, Ill., a corporation of Delaware
Filed June 22, 1965, Ser. No. 465,855
7 Claims. (Cl. 37—43)

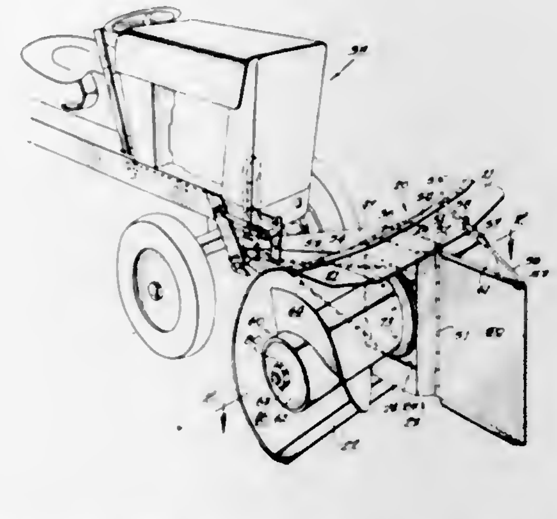

A snow removal machine that can be set up to remove snow by different methods as dictated by the prevailing conditions. The machine includes a pair of augers that can be mounted such that the flighting is either right or left-hand feed and the augers can be rotated in either direction.

3,398,471
TRENCHER BOOM AND AUGER MOUNT
William Delbert Brown, Woodbine, Iowa, assignor to Omsteel Industries, Inc., Omaha, Nebr.
Filed Mar. 4, 1965, Ser. No. 437,078
5 Claims. (Cl. 37—86)

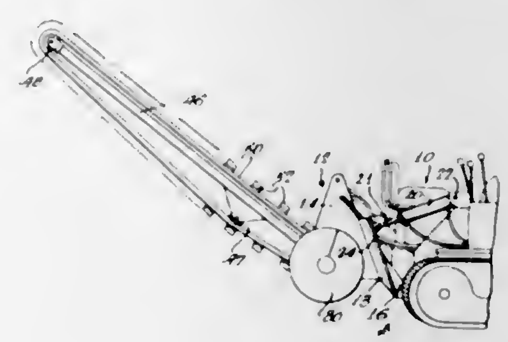

A trenching device for use with vehicles including support means movably mounted on the vehicle for up and down movement relative thereto, means for adjusting the height of the support means relative to the vehicle, a boom pivotally mounted on the support means and including cutting means thereon for digging a trench, means for adjusting the position of the boom with respect to the support means and means on the support means for moving material away from the cutting means.

3,398,472
SIDE OR FRONT DUMPING EXCAVATING BUCKET WITH FRUSTO-CONICAL CHUTES
Tage Nils Wilhelm Leijon, Sturevagen 18, Stocksund, Sweden
Filed June 13, 1966, Ser. No. 557,245
Claims priority, application Sweden, June 24, 1965, 8,452/65
8 Claims. (Cl. 37—118)

This invention relates to an excavating bucket which is open at both ends and adapted to be carried upon and operated by a loading machine and to be tilted forwardly or laterally or both, said bucket being characterized in

that it has a bottom surface that is inclined upwardly from the middle portion thereof toward both ends, said

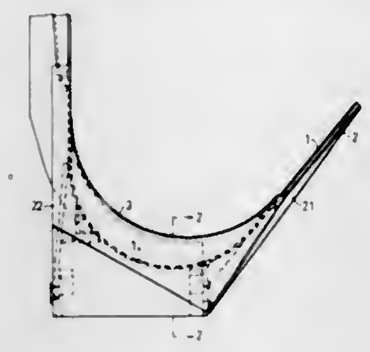

bottom surface being formed by securing inclined quadrangular plates to the bottom of a straight trough.

3,398,473
FEED APPARATUS
Edward C. Pfeffer, Jr., and Francis H. Hughes, Troy, and Albert E. Wagar, Albany, N.Y., assignors to Cluett, Peabody & Co., Inc., Troy, N.Y., a corporation of New York
Filed June 13, 1966, Ser. No. 557,296
3 Claims. (Cl. 38—10)

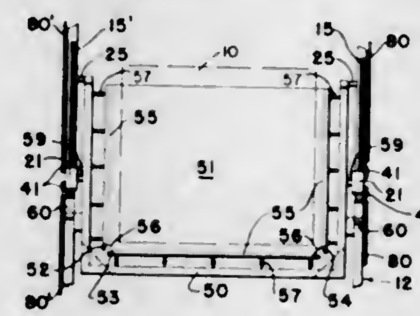

A tray feed apparatus which includes two trays mounted on rigid runners which carry the tray into and out of registry with a press. The trays are so connected that movement of one tray toward the press causes movement of the other tray in a direction away from the press. Each tray has a frame carrying a porous working surface which is attached to the frame by elastic members.

3,398,474
MOTORIZED MULTI-ROLLER HEAT PRESS HANGER
Dorothea M. Weitzner, 8 E. 62nd St., New York, N.Y. 10021
Filed Sept. 22, 1966, Ser. No. 581,231
7 Claims. (Cl. 38—101)

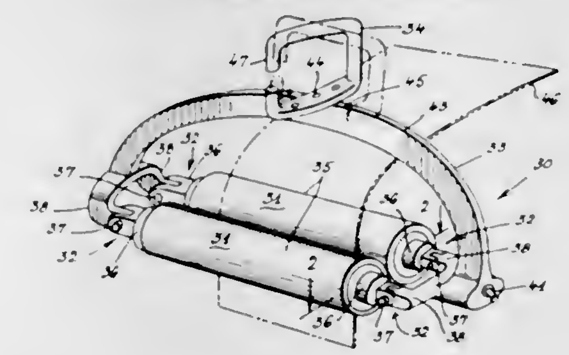

A multiple roller assembly having self-contained means for pressing fabric materials and which is adaptable for being supported from a closet garment hanger bar when in a stored, non-use position. The roller assembly consists of a generally arcuate shaped frame with means for supporting rollers at opposite ends thereof, and means at midportion of the frame for supporting the assembly from a garment hanger bar of a closet. The rollers are electrically heated and are rotated by motor power.

3,398,475
TAG HOLDING DEVICE
Donald M. Palmer, 922 SE. 45th Ave., Portland, Oreg. 97215
Filed Nov. 7, 1966, Ser. No. 592,572
1 Claim. (Cl. 40—11)

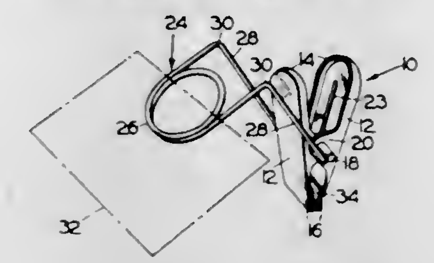

This invention is concerned with a device for holding a tag or the like on suitable supports such as articles of merchandise. The device has a base portion such as a spring clip which rotatably supports a tag holding arm made of spring wire with a helical looped portion. The helical looped portion is arranged frictionally to receive and hold a tag removably between the loops. The tag holding arm is secured on a shaft of the spring clip and a helical spring is mounted on this shaft. Such helical spring serves two purposes: first, it urges the spring clip closed and second, it binds the members of the spring clip against the shaft to cause restricted movement of the shaft so that the tag holding arm will remain in selected set positions.

3,398,476
FIREARM WITH A BREECH BOLT HAVING A SWINGABLE ACTION END WITH AN EXTRACTOR ATTACHED THERETO
Tore Erik Hoving, Storbrogatan 13, Filipstad, Sweden
Filed Oct. 20, 1966, Ser. No. 588,173
9 Claims. (Cl. 42—25)

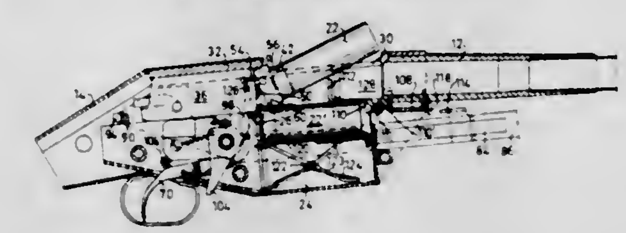

A firearm has a breech bolt having an action end which is articulated to the bolt and is rigidly connected to an extractor hook for reliable ejection of shells from the cartridge chamber. At least most of the metallic parts of the firearm are made of rustproof material.

3,398,477
FISHHOOK LIVE BAIT HARNESS
Guirino W. Paluzzi, 1200 Laurel Ave., Chesapeake, Va. 23325
Filed Jan. 26, 1967, Ser. No. 611,888
5 Claims. (Cl. 43—44.4)

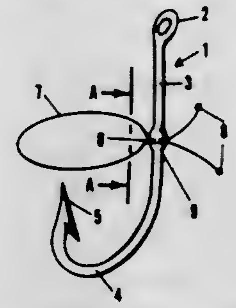

A fishhook has a shank portion with an opening, in addition to the normal eye of the hook. A harness passes transversely through the opening and is frictionally adjustable therein.

3,398,478
SNARES
Ralph E. Pearsall, Gloucester, Mass., assignor to United Shoe Machinery Corporation, Flemington, N.J., a corporation of New Jersey
Filed June 17, 1966, Ser. No. 558,473
6 Claims. (Cl. 43—58)

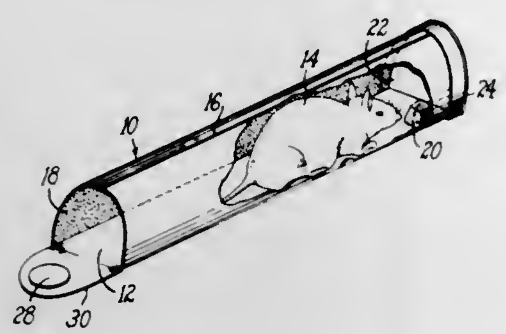

1. A snare for small animals comprising means providing a pathway onto which an animal may be attracted by bait, tacky adhesive surfaces on each side of the pathway leaving the pathway free from adhesive, said tacky adhesive surfaces being spaced a distance greater than the width of the animal to be snared but less than the length of said animal, and a barrier at one end of said pathway.

3,398,479
BUBBLE FORMING AND PROJECTING TOY
Karl B. Rave, Cincinnati, Ohio, assignor to Kenner Products Company, Cincinnati, Ohio, a corporation of Delaware
Filed Sept. 29, 1965, Ser. No. 491,165
7 Claims. (Cl. 46—8)

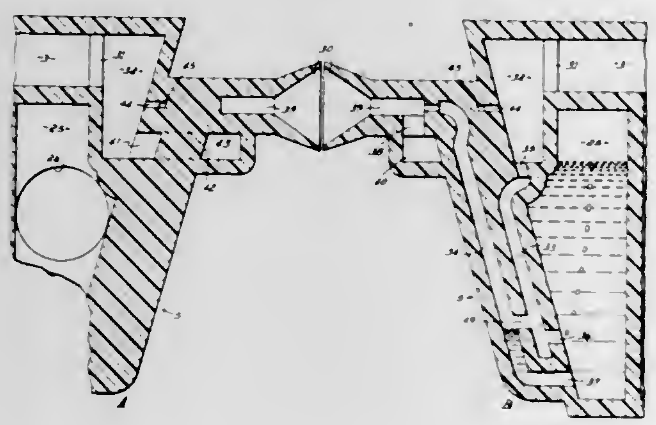

A toy gun for forming bubbles from a bubble solution that basically comprises, for example, means for creating a charge of compressed air, a reservoir to contain the bubble solution, means defining a plurality of passageways interconnected with said compressed air means and said reservoir so that the bubble solution is intimately admixed and aerated with compressed air, and nozzle means interconnected with the passageways and the compressed air means to form bubbles from the bubble solution and project same into the atmosphere.

3,398,480
AUTOMATIC APPARATUS FOR CONTROLLING ELECTRICALLY DRIVEN TOYS
Ichiro Tsunoda, Tokyo, Japan, assignor of one-half to Shigeichi Hoshikuma, Yokohama-shi, Japan
Filed Aug. 31, 1965, Ser. No. 483,964
Claims priority, application Japan, Sept. 10, 1964, 39/51,080
4 Claims. (Cl. 46—244)

4. In electrically driven toys provided with an inertial element comprised of an inertial disc, a rod with screws fitted loosely within the center hole of the inertial disc and provided with a center bore into which the shaft of a motor electrically driving the toys is pressed and a pair of washers preventing the inertial disc from escaping the rod and fitted at the both ends of the rod, and provided with a reversing switch for transferring the polarity of the potential applied to the motor,

an automatic apparatus for controlling the electrically driven toys comprising:

a self disconnecting switch operated by a cam having gears engaging with a worm fixed on the shaft for driving the toys,

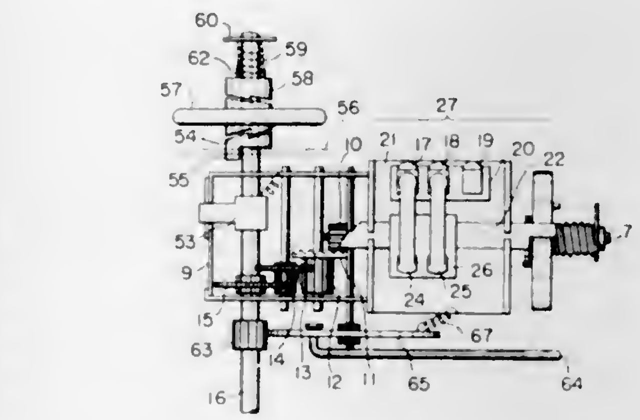

a set of ratchet means fixed on the shaft for driving the toys and on the driven member, respectively,

said set of ratchet means rotating with the shaft for driving toys when said driving shaft rotates in the forward direction and locking the driven member when said driving shaft rotates in the backward direction, and

means for pushing or pulling a connecting rod mounted on a gear of irregular shape meshing with a pinion gear mounted on the shaft for driving the toys,

said means for pushing or pulling a connecting rod operating to move the blade of a bulldozer toy.

3,398,481
METHOD AND APPARATUS FOR CONTROLLING CARBON DIOXIDE CONCENTRATIONS IN GREENHOUSES
John V. Lake, Silsoe, England, assignor to National Research Development Corporation, London, England, a corporation of Great Britain
Filed May 20, 1966, Ser. No. 551,745
Claims priority, application Great Britain, May 20, 1965, 21,434/65
10 Claims. (Cl. 47—58)

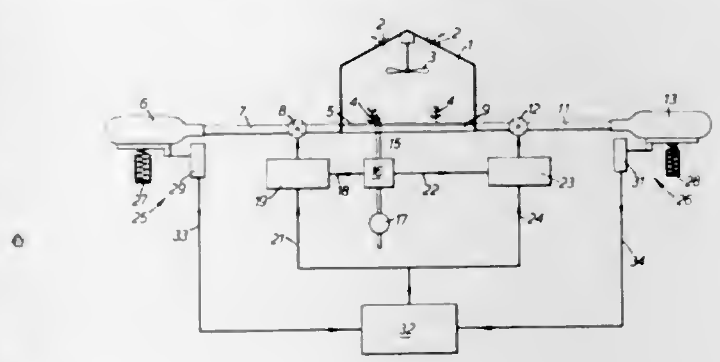

This application describes a method for controlling the amounts of carbon dioxide in greenhouses, and apparatus to perform the method. The amounts are controlled by (1) measuring CO_2 assimilation and (2) measuring CO_2 leakage via the use of a passive gas such as nitrous oxide, the latter not being assimilated by plants in the greenhouse.

3,398,482
SHOCK-ABSORBING CONTROL APPARATUS FOR FIRE DOORS
Claud Frederick, Jr., Cincinnati, Ohio, assignor to The Steelcraft Manufacturing Company, Rossmoyne, Ohio, a corporation of Ohio
Filed June 13, 1966, Ser. No. 557,099
8 Claims. (Cl. 49—8)

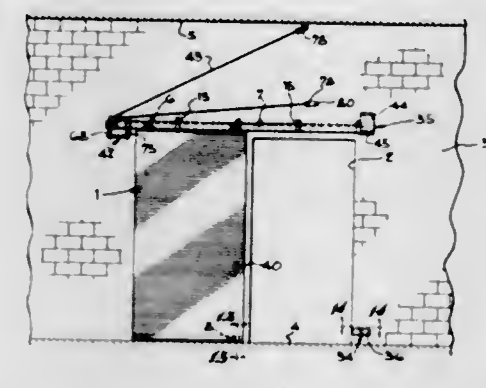

The disclosure is directed to a shock-absorbing mechanism for an automatic, heat-responsive fire door control apparatus in which the door is closed automatically in the event of a fire. In general, the fire door arrangement comprises a horizontal trolley rail extending transversely across and beyond one side of a door opening, with a fire door suspended from the rail by means of trolleys tracked upon the rail, such that the door may be translated manually, under normal conditions, from an open to a closed position. For closing the door in the event of a fire, there is provided a spring-loaded retriever reel connected by a retriever cable to a pusher trolley which is normally disconnected from the door and which is released by a heat-responsive trigger mechanism in response to the melting or failure of a fusible link.

The pusher trolley normally resides in spaced relationship to the trailing edge of the door (the spacing depending upon the random position of the door as shifted manually). In order to eliminate the impact force which is developed upon release of the pusher trolley in response to a fire, the pusher trolley is provided with a shock-absorbing lever which has its upper end pivotally connected to the pusher trolley, the lever projecting downwardly, with its lower end engageable with the door. A compression spring is interposed between the pusher trolley and the midportion of the shock-absorbing lever (cushioning lever), the spring being compressed to permit the shock-absorbing lever to yield in response to the impact force developed by the pusher trolley upon engagement with the door so as to protect the mechanism against shock forces which may otherwise lead to damage or failure of the mechanism.

3,398,483
OUTWARDLY OPENING WINDOW FOR MOTOR VEHICLES
Rudolf Ringel, Kurt Schwenk, and Hermann Hablitzel, Hannover, Germany, assignors to Messrs. Volkswagenwerk Aktiengesellschaft, Wolfsburg, Hannover, Germany, a corporation of Germany
Filed June 1, 1966, Ser. No. 554,586
Claims priority, application Germany, June 4, 1965, V 28,627, V 28,628; July 10, 1965, V 28,850
9 Claims. (Cl. 49—34)

An outwardly opening glass window for motor vehicles having a frame surrounding a window pane elastically deformable when the pane is opened outwardly and the pane secured in the frame at one transverse edge remote from

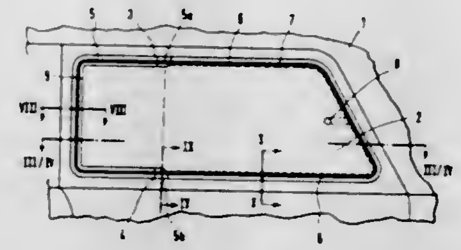

the opening-out end and along a part of the adjoining longitudinal edges.

3,398,484
CAR DOOR ACTUATOR
Toru Katsumura, 833 Kugaharamachi, Ota-ku; Shosuke Morita, 33–15 1-chome, Hakusan, Bunkyo-ku; Tokutaro Ozeki, 6 4-chome, Honkamata, Ota-ku; Kazuo Tamaoki, 33–15 1-chome, Hakusan, Bunkyo-ku; and Sosaku Mori, 15 3-chome, Kanamecho, Toshima-ku, all of Tokyo, Japan
Filed Feb. 2, 1966, Ser. No. 524,611
Claims priority, application Japan, June 4, 1965, 40/32,667
7 Claims. (Cl. 49—138)

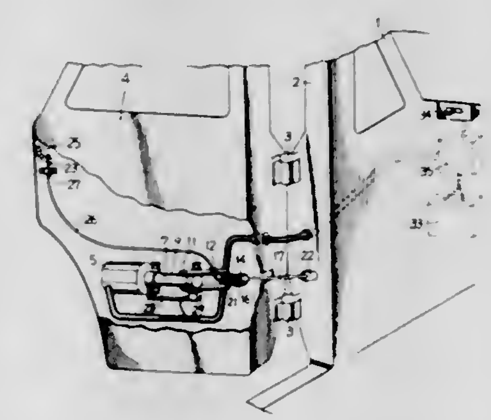

A door actuator arrangement, comprising a D.C.-drive motor having field windings and an armature and adapted to be mounted within the interior of the door, a current source for feeding said motor, motion-converting means connected to the motor for the conversion of the rotational movement of the motor into a linear motion, a transmission mechanism linked with said means and transmitting said converted linear motion to the door for opening and closing the latter, a multi-contact multi-position switch assembly electrically connected between said motor and said current source, a plurality of relays electrically connected with the contacts of said switch, and a multi-stage resistor connected between said field windings and said armature, said switch assembly, resistor and relays being connected for making the armature current supplied from said current source the strongest when the switch is manipulated to a first position in the door-opening direction at the initiation of the door-opening and then the armature current is weakened when the switch is moved to at least one subsequent position.

3,398,485
OVERHEAD DOOR SUPPORTING HINGE MECHANISM
William H. Stokes, Lakewood, Ohio, assignor to United States Steel Corporation, a corporation of Delaware
Filed Apr. 4, 1966, Ser. No. 539,694
4 Claims. (Cl. 49—202)

Mechanism includes a vertical track on the two opposed side edges of a container door; a roll-mounted

carriage disposed for movement along each of the tracks; and two rigid links each pivotally connected by one end to one of the carriages and by its other end to an adja-

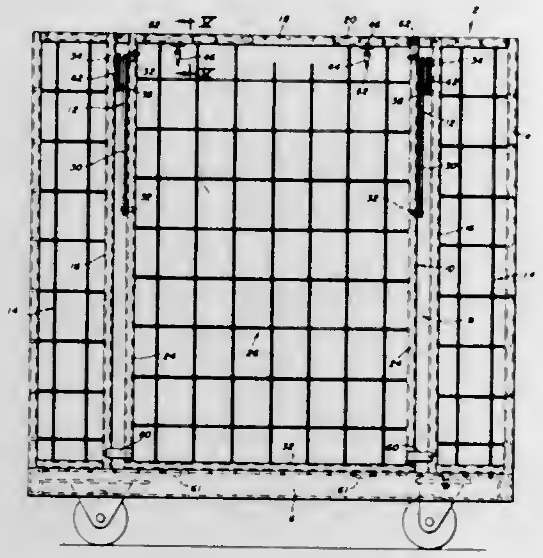

cent vertical member of the doorway frame. Mechanism permits uptilting of the door away from the doorway to an overhead open position atop the container.

3,398,486
ROOF ASSEMBLIES
Jean G. Cadiou, Paris, France, assignor to Societe Anonyme Andre Citroen, Paris, France, a French company
Filed Dec. 22, 1966, Ser. No. 603,989
Claims priority, application France, Dec. 28, 1965, 3,250
12 Claims. (Cl. 49—209)

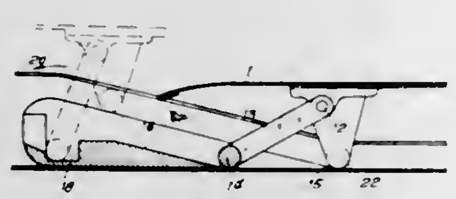

An automobile sun roof which may be raised to provide ventilation or slid to uncover an opening in the roof and allow sunlight to enter. The roof opening has on each of two of its opposite sides a hollow guide rail in each of which are two ramps of different heights and an abutment which is separated from the ramps by a cavity, the sun roof having, adjacent to each of the guide rails a downwardly extending guide member with a first roller which rides on the bottom of the associated guide rail, and a second roller which is mounted on the end of an arm pivoted to the guide member, so that, when the sun roof is moved, the first roller rolls over the bottom of that guide rail and onto the higher of the two ramps and the second of the rollers rides on the lower of the two ramps until it falls into the cavity and contacts the abutment thereby causing the arm to pivot and the sun roof to move forwardly and downwardly until the first roller is again at the bottom of the guide rail.

3,398,487
SWINGING DOOR CONSTRUCTION
John Matyas, 13852 Keal Ave., Detroit, Mich. 48227
Filed Sept. 16, 1966, Ser. No. 579,968
5 Claims. (Cl. 49—239)

A room having a door opening and a door panel which is pivoted at its upper end by a bracket and pivot pin and at is lower end by a pair of pivot members and a pivot pin extending into and aligned with openings in

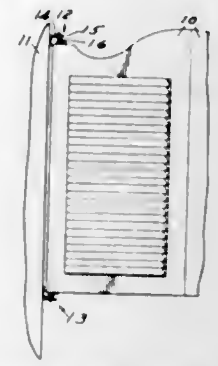

the pivot members. The pivot members have cooperating horizontal and inclined surfaces.

3,398,488
WINDOW REGULATOR
Louis P. Garvey, Birmingham, Mich., assignor to General Motors Corporation, Detroit, Mich., a corporation of Delaware
Filed May 23, 1966, Ser. No. 552,271
5 Claims. (Cl. 49—350)

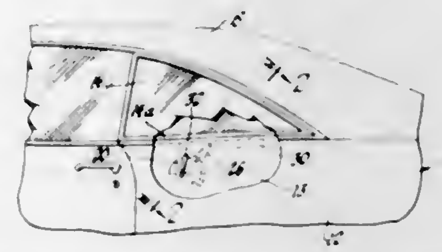

This is a window regulator mechanism in which a stabilizer is fixedly mounted on and projects from the stationary regulator mounting plate. The stabilizer has a free edge portion which lies adjacent the path of swinging movement of the window lift arm and is formed on an arc concentric with said path. Guide means on the lift arm slidably engage the stabilizer to provide a guide and bearing surface for the lift arm.

3,398,489
ROLL GRINDING MACHINE
Edwin H. Rohrer, Poland, Ohio, assignor of fifty percent to William T. Jones, Park Forest, Ill.
Filed Feb. 3, 1966, Ser. No. 524,736
6 Claims. (Cl. 51—32)

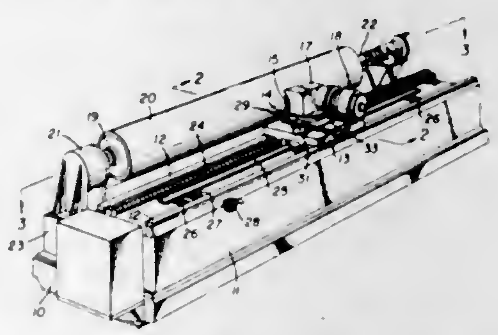

A roll grinding machine for radial type crowning in which the grinder pivots as well as in-feeds so that the grinding surface is tangent to the roll face being ground at all times.

3,398,490
FLOOR SANDING MACHINE WITH CONTROLLABLE MOTION
William H. Redifer, 3838 Cumberland Drive, Youngstown, Ohio 44515
Filed June 28, 1966, Ser. No. 561,082
5 Claims. (Cl. 51—177)

1. A floor sanding machine having a housing and a supporting structure therein, a motor in said housing, a

suction fan in said housing driven by said motor and three sanding discs carrying members rotatably mounted in said supporting structure, two of said three members being positioned in side-by-side relation in one end of said housing and the third member being positioned in the other end thereof, a drive shaft on said motor and positioned between said three members, means intercon-

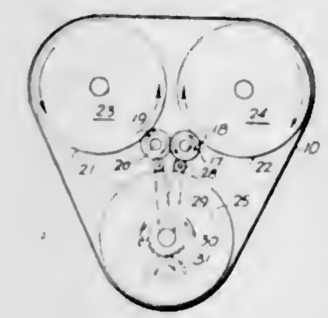

necting said two members in the one end of said housing and said drive shaft for rotating said two members in opposite rotary motion and selectively interconnecting said third member and said drive shaft for rotating said third member in either direction whereby the direction of rotation of said third member may be caused to correspond with either one of said two members.

3,398,491
BUILDING CONSTRUCTION AND METHOD
Henry N. Babcock, 4 Quintard Ave., Old Greenwich, Conn. 06870
Filed May 13, 1965, Ser. No. 455,429
17 Claims. (Cl. 52—90)

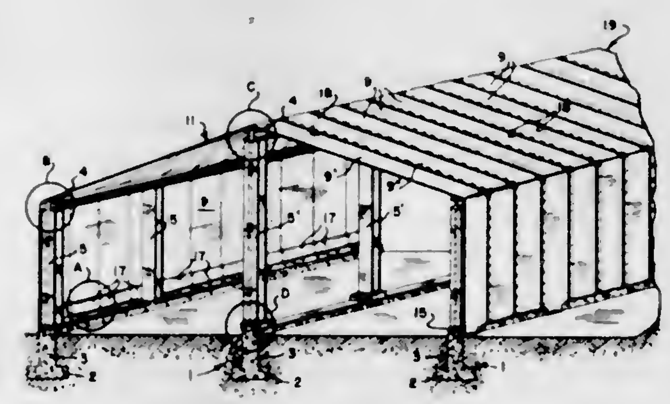

A building construction including a set of spaced load bearing members and at least one sheet of flat metal sheet stretched transversely over the load bearing members, the sheet having an induced tension applied thereto and permanently anchored at its ends.

3,398,492
EXTENDABLE BOOM
Harold K. Nansel, Waverly, Nebr., assignor to National Crane Corporation, Waverly, Nebr., a corporation of Nebraska
Filed Dec. 21, 1966, Ser. No. 603,521
9 Claims. (Cl. 52—115)

An apparatus having telescoping sections powered by a telescoping hydraulic cylinder system. Mechanical latches are used to limit extension and retraction of the sections.

3,398,493
CONCRETE PRESSURE VESSELS
Cecil Massey, Warrington, England, assignor to United Kingdom Atomic Energy Authority, London, England
Filed Feb. 3, 1964, Ser. No. 342,210
Claims priority, application Great Britain, Feb. 12, 1963, 5,646/63
3 Claims. (Cl. 52—230)

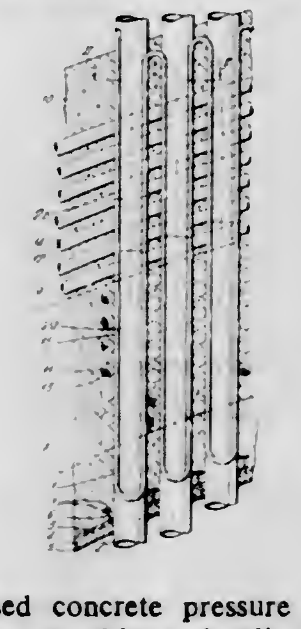

1. A pre-stressed concrete pressure vessel having a portion thereof penetrated by a plurality of closely spaced parallel apertures arranged in lattice array and providing access to the interior of the vessel, said portion comprising a plurality of lifts of concrete, each lift of concrete including substantially parallel stacks of spaced prestressing cables disposed between adjacent rows of apertures, the diameter of the cables in each stack being slightly less than the distance between the adjacent rows of apertures, and the said stacks associated with adjacent lifts of concrete being angularly displaced relative to one another.

3,398,494
WALL JOINT
Elton H. Larson, 5105 Weeks, P.O. Box 10082, San Diego, Calif. 92110
Continuation of application Ser. No. 496,643, Oct. 15, 1965. This application Jan. 3, 1967, Ser. No. 617,739
9 Claims. (Cl. 52—371)

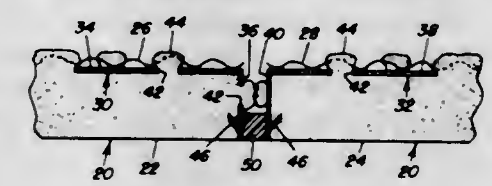

Preformed joint for two wall sections of a room, which wall sections are formed of plaster or stucco. The joint is in the form of a unit including two coextensive screeds, one being attachable to one of the wall sections and the other being attachable to the other wall section. A coextensive strip is formed of impervious and inherently expansible and contractible material which is interposed between flat sections of the aforementioned screeds, and is permanently bonded throughout both sides thereof with the flat sections of the screeds.

3,398,495
EXPANSIBLE REINFORCING ELEMENT FOR MASONRY WALL JOINTS
Henry W. Petty, 39 E. Main St., Moorestown, N.J. 08057
Filed Oct. 18, 1965, Ser. No. 497,155
12 Claims. (Cl. 52—442)

A masonry wall reinforcing element in the general form of a squared S or squared figure 8 to provide opposite end sections joined by a resilient central connection, the

reinforcing element being used to tie together adjacent masonry wall sections and to permit controlled relative movement of the latter by rigidly anchoring the opposite

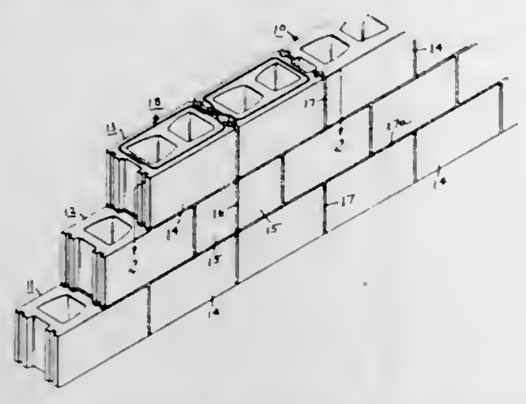

end sections of a reinforcing element respectively in adjacent wall sections with the resilient central connection bridging the gap therebetween and free to flex.

3,398,496
CLAMPING CONNECTION
Arthur O. Mischke, Ruit, Kreis Esslingen, Germany, assignor to Daimler-Benz Aktiengesellschaft, Stuttgart-Unterturkheim, Germany
Filed Sept. 24, 1964, Ser. No. 398,848
Claims priority, application Germany, Sept. 27, 1963, D 42,577
1 Claim. (Cl. 52—463)

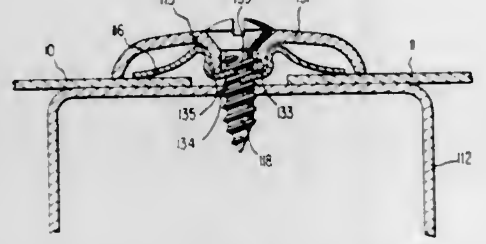

A clamp-type connection between two or more sheet metal parts, comprising a relatively fixed part, a clamping spring member, a channel-shaped cover strip resiliently retaining the clamping spring member, and a clamping screw in threaded engagement with the clamping spring member and with an aperture in the relatively fixed part, and having a head which overlies the cover strip, thus securing the clamping spring and the cover strip to the relatively fixed part with the sheet metal parts being thus secured between flange portions of the clamping spring member and the surface of the relatively fixed part.

3,398,497
GRIDS
Edward J. Hellmich, R.F.D. 51, 3 Suchville, Bayamon, Puerto Rico 00619, and Kaye L. Whitnah, 10425 Golterman Drive, St. Louis, Mo. 63126
Filed May 4, 1965, Ser. No. 453,026
19 Claims. (Cl. 52—665)

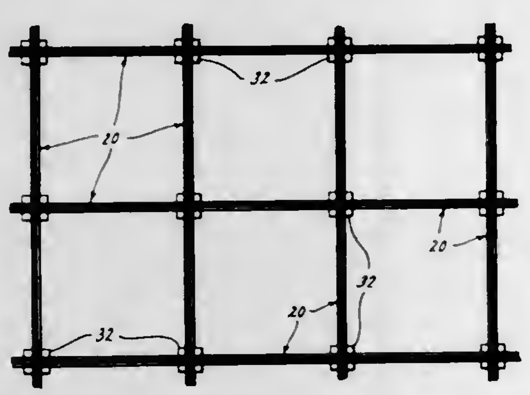

A grid for a terrazzo floor has securing plates which hold the ends of "butting" strips immediately adjacent the side faces of "through" strips and which has further securing plates which hold the ends of said "through" strips immediately adjacent the side faces of further "through" strips and thus enable the first "through" strips to serve as "butting" strips as well.

3,398,498
COMPOSITE STEEL TRUSS AND PRECAST CONCRETE SLAB AND BEAM UNITS
Paul Krauss, Winnipeg, Manitoba, Canada, assignor to Barkrauss Enterprises Ltd., Winnipeg, Manitoba, Canada
Filed Sept. 9, 1966, Ser. No. 578,341
8 Claims. (Cl. 52—691)

A composite concrete and steel truss consisting of a reinforced concrete slab or beam with a plurality of downwardly depending webs and a number of exposed steel members. The steel members incorporated with the concrete slab and webs produce a composite truss unit in which the steel members are the tension chord and tension diagonals and the concrete slab and vertical webs are the compression members.

3,398,499
INTERLOCKING EXTRUDED SECTIONS
Gary R. Moore, 805 N. Main, Clawson, Mich. 48017, and William O. Hanson, Huntington Woods, Mich.; said Hanson assignor to said Moore
Continuation-in-part of application Ser. No. 479,738, Aug. 16, 1965. This application Mar. 2, 1966, Ser. No. 533,125
6 Claims. (Cl. 52—731)

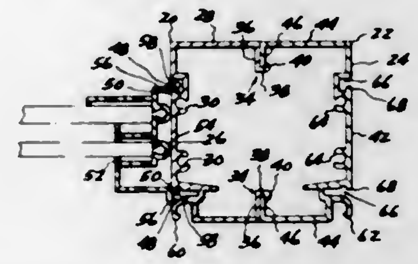

Extruded structural members formed to be snapped together to form a hollow structural column and comprising a first structural member having an inwardly directed flange at each of opposite edges of the member, means forming slots along the inner edge of each of the flanges, a second structural member having an inwardly directed flange at each of opposite edges of the member and adapted to be snapped into the slots formed in the first member to thereby lock the members together and means formed along at least one of the surfaces of the structural column forming slots and oppositely directed flanges for securing other members to the structural column.

3,398,500
METHOD AND APPARATUS FOR PACKAGING
Richard B. Inman, Atlanta, Ga., assignor to Scientific Atlanta, Inc., Atlanta, Ga., a corporation of Georgia
Continuation of application Ser. No. 398,721, Sept. 23, 1964. This application June 30, 1967, Ser. No. 650,546
11 Claims. (Cl. 53—22)

Apparatus comprising a chamber divided into a first compartment and a second compartment, means for ad-

vancing packages from the first to the second compartment, a membrane separating the compartments spaced from a wall of the chamber to provide an opening for

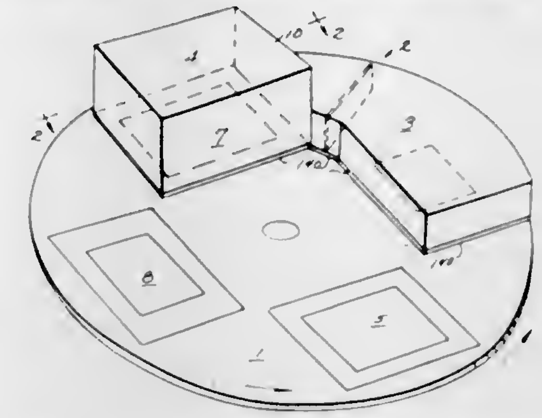

transferring the packages between the compartments, means for withdrawing air from the first chamber, and means for flowing inert gas into the second chamber.

3,398,501
METHOD AND EQUIPMENT FOR PACKING
John H. Aninger, 2031 S. Beverly Glen Blvd., Los Angeles, Calif. 90025
Filed July 26, 1967, Ser. No. 656,185
2 Claims. (Cl. 53—35)

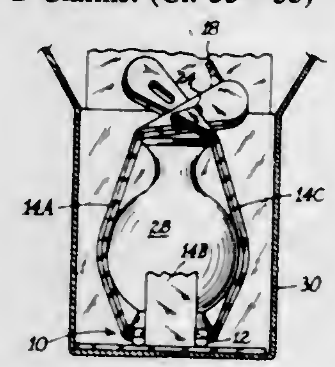

A method and an equipment for the packing of complex, irregularly-shaped fragile and delicate articles of merchandise selectively. The packing is accomplished by means of an inflatable pneumatic cushion configuration adapted to be placed around the article of merchandise and to be joined through fastening means which are integral with said pneumatic cushion.

3,398,502
DISPENSING APPARATUS FOR WIRE REINFORCED PAPER TAPE
Paul R. Halstead, Milwaukie, Oreg., assignor to Package Containers, Inc., Portland, Oreg., a corporation of Oregon
Filed Dec. 23, 1965, Ser. No. 515,959
5 Claims. (Cl. 53—135)

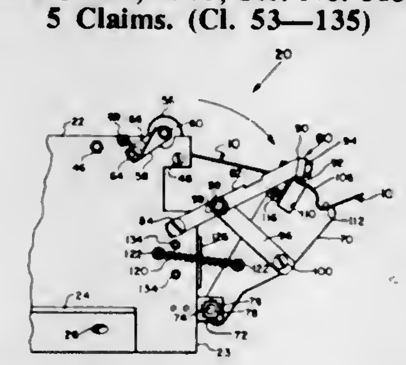

An apparatus for placing a prescribed length of wire reinforced paper tape around the neck of a polyethylene bag, having a supporting plate on which is mounted a spool for carrying a supply of the tape, an anvil pivotally mounted on the plate forwardly of the spool and over which the tape is fed, and a knife also pivotally mounted on the plate and linked to the anvil and adapted to strike the anvil at the forward limit of rotation thereof to sever a length of tape after the same has been partially placed about the neck of the bag. The anvil has a depressed upper surface to form a station into which the bag neck is inserted to assist in the placement of the tape thereabout. Downward pressure on the station rotates the anvil forwardly to actuate the knife and to draw an additional length of tape from the spool.

3,398,503
FILLING AND CLOSING APPARATUS FOR BAGS OF THERMOPLASTIC MATERIAL
Guido Bertoglio, 1 Via Quiete, 6962 Viganello, Switzerland
Continuation-in-part of application Ser. No. 331,182, Dec. 17, 1963. This application Nov. 10, 1966, Ser. No. 607,097
Claims priority, application Switzerland, Jan. 17, 1963, 587/63
7 Claims. (Cl. 53—187)

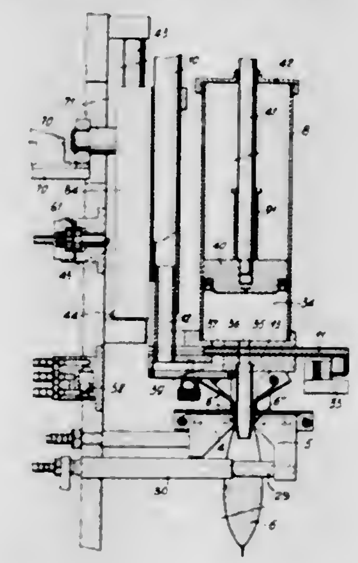

An apparatus for filling plastic bags with liquid in which ten filling stations equiangularly mounted on a turntable are each equipped with suction jaws for holding, opening and closing the bags and with a liquid dispensing pump. A rocker which travels back and forth in an arc coaxially with the turn table carries a feeder, a heat sealing station, a cooling station, and a discharge station which sequentially cooperate with the filling stations during continuous rotary movement of the latter. Cams and pneumatic devices operate the elements of the apparatus in timed sequence, and safety devices are provided to prevent spilling of liquid in the absence of a bag at the filling station.

3,398,504
METHOD OF TRANSPORTING HYDROGEN AND APPARATUS THEREFOR
Leonard R. Rubin, Union, N.J., assignor to Engelhard Industries, Inc., Newark, N.J., a corporation of Delaware
Filed Mar. 7, 1967, Ser. No. 621,307
15 Claims. (Cl. 55—16)

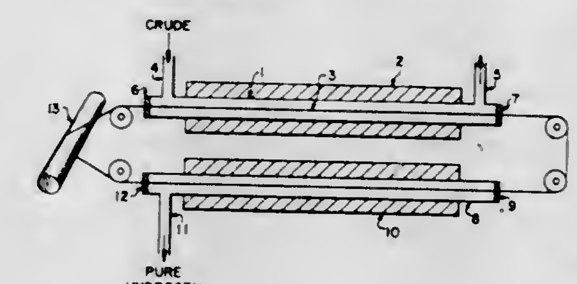

This disclosure relates to a method for purifying hydrogen by use of palladium and palladium alloys. These metals are used in transportation and purification of hy-

drogen by virtue of their ability to absorb and desorb gas. The pure hydrogen gases are normally obtained from a mixture of gases containing hydrogen by contacting said mixture with the palladium or palladium alloy. Absorption then takes place followed by desorption of the hydrogen into a site different from the one in which the hydrogen was initially absorbed.

3,398,505
DUAL STAGE MEMBRANE GAS SEPARATORS WITH VARIABLE CONDUCTANCE MEANS FOR VARYING THEIR THROUGHPUT
Peter M. Llewellyn, Menlo Park, Calif., assignor to Varian Associates, Palo Alto, Calif., a corporation of California
Filed Mar. 27, 1967, Ser. No. 626,194
6 Claims. (Cl. 55—16)

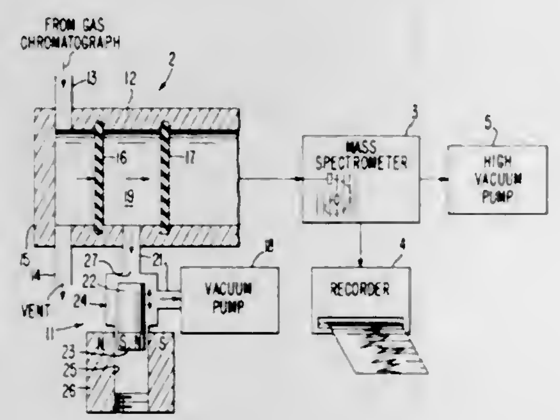

Dual stage membrane type gas separators are disclosed along with gas analyzing systems employing same. In such separator, the gas pressure on the output side of each successive membrane is lower than that on its input side. It is disclosed that a variable conductance device is connected in the exhaust tubulation through which the space between two successive membranes is evacuated. By controlling the conductance of the variable conductance device the gas pressure in the space between the membranes is controlled, thereby controlling the percentage throughput of the two stage separator. The two stage gas separator with adjustable throughput is connected in line between a gas chromatograph and a mass spectrometer type gas analyzer. The separator enriches the gas sample by discriminating against the carrier gases. In addition, the variable conductance device permits adjusting the sample throughput to the mass spectrometer over a range from 80% to 2%. Thus, small and large output peaks of the gas chromatograph may be analyzed by the mass spectrometer without overloading the mass spectrometer by preselecting the throughput of the separator via the variable conductance device.

3,398,506
PURIFICATION OF GASES
Wolfgang Baldus, Munich, Germany, assignor to Gesellschaft fur Linde's Eismaschinen Aktiengesellschaft, Wiesbaden, Germany
Filed June 7, 1965, Ser. No. 461,860
Claims priority, application Germany, June 5, 1964, G 40,769
20 Claims. (Cl. 55—23)

In a process for the production of hydrogen containing at least 1 adsorbable impurity selected from the group consisting of nitrogen, methane, carbon monoxide, and a mixture thereof, comprising compressing raw hydrogen, cooling resultant compressed hydrogen to condense substantially all impurities boiling above −120° C. in said compressed hydrogen, and passing resultant condensate-free hydrogen through an adsorption zone to eliminate said adsorbable impurity, the improvement in the adsorption step which comprises passing said hydrogen containing said adsorbable impurity through a first adsorber zone operating at 90° K. to remove a portion of said

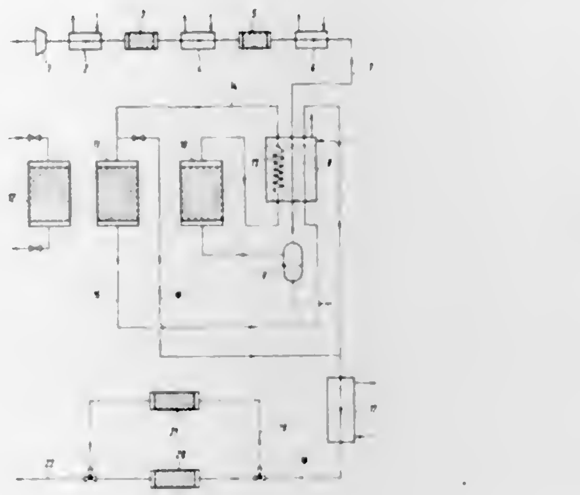

adsorbable impurity; then passing resultant purified gas to a second adsorber zone operating at 35–45° K. to remove a further amount of said adsorbable impurity; and withdrawing finally purified gas from said second adsorber zone.

3,398,507
METHOD OF PRODUCING HYPERSONIC FLUID FLOW
Lorant Balogh, Hochdahl, Victor Denk, Wittlaer, Erbard Klinkhardt, Hochdahl, and Eugen Sänger, Stuttgart-Vaihingen, Germany, assignors to Firma Aviatest G.m.b.H., Dusseldorf, Germany
Filed July 19, 1963, Ser. No. 296,164
Claims priority, application Germany, July 27, 1962, R 33,213
9 Claims. (Cl. 55—55)

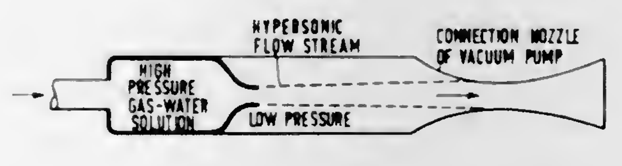

1. A method for producing hypersonic fluid flow by using a substantially gas-liquid-phase mixture having a heavily reduced sound velocity comprising the steps of providing a substantially homogeneous solution in which the gas-phase part of the desired mixture is dissolved in the liquid-phase part in such a ratio that the dissolved gas is at least partly desorbed by decreasing the pressure of the solution, and passing the pressurized solution through fluid flow passages so that the flow velocity increases and the pressure of the solution drops to such an extent that an amount of gas is desorbed resulting in a gas-liquid-phase mixture in which the sound velocity is sufficiently reduced so that the rate of flow velocity to sound velocity is that wherein Mach number lies in the hypersonic range.

3,398,508
METHOD FOR REMOVING WATER AND HYDROCARBONS FROM GASEOUS HCl
Walter C. Hart, Bartlesville, Okla., assignor to Phillips Petroleum Company, a corporation of Delaware
Filed July 5, 1966, Ser. No. 562,848
5 Claims. (Cl. 55—71)

A gaseous stream containing solidifiable impurities (such as HCl containing paraffin hydrocarbons of 9 to 16

carbon atoms and benzene) is purified by chilling said stream to form solid impurities on the wall of a chiller, scraping the solids off said wall to form a gas-solids stream,

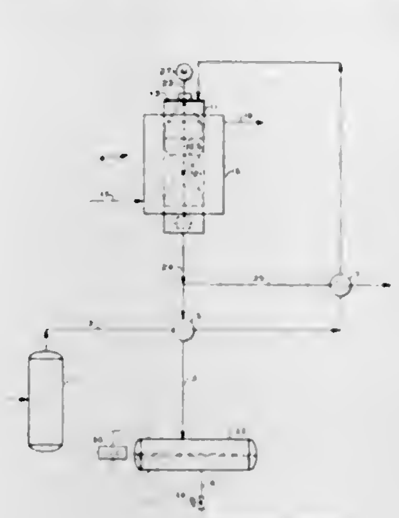

flowing said gas-solids stream at sufficient velocity in a straight line flow path to separate gas and solids by changing the direction of gas flow to allow the solids to continue in a straight line of flow.

3,398,509
METHOD OF AND APPARATUS FOR DESULFURIZING INDUSTRIAL WASTE GASES
Zensuke Tamura and Yukio Hishinuma, Hitachi-shi, Japan, assignors to Hitachi, Ltd., Tokyo, Japan, a corporation of Japan
Filed Aug. 15, 1967, Ser. No. 660,714
Claims priority, application Japan, Aug. 15, 1966, 41/53,605, 41/53,606; Sept. 21, 1966, 41/61,974, 41/61,979, 41/61,981
6 Claims. (Cl. 55—73)

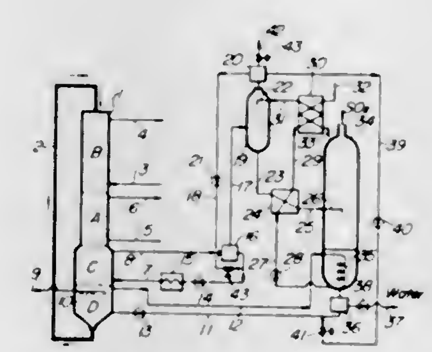

A method of and an apparatus for desulfurizing industrial waste gases by means of moving bed system using active carbon and having a low temperature adsorption zone, a high temperature adsorption zone, a desorption zone and a cooling zone arranged from the top to the bottom thereof, characterized in that a suitable amount of cooling water is injected directly into the cooling zone to directly cool the active carbon.

3,398,510
HUMIDITY CHANGER
Neal A. Pennington, Tucson, Ariz., assignor to Lizenzia A.G., Zug, Switzerland, a corporation of Switzerland
Continuation-in-part of application Ser. No. 473,509, Dec. 7, 1954. This application Nov. 6, 1962, Ser. No. 235,784
23 Claims. (Cl. 55—163)

1. A humidity-changer for air-conditioning, comprising: outgoing-air passage means; incoming-air passage means; means for impelling air through the two passage means; a rotary moisture-transferrer mounted for rotating across both passage means; means for rotating the moisture transferrer; and an air heater for heating the outgoing air for regenerating the moisture-transferrer; said humidity-changer being characterized by the fact that the moisture-transferrer comprises a wheel-like casing, and a packing of inert air-permeable absorbent material impregnated with a non-volatile hygroscopic substance, said packing

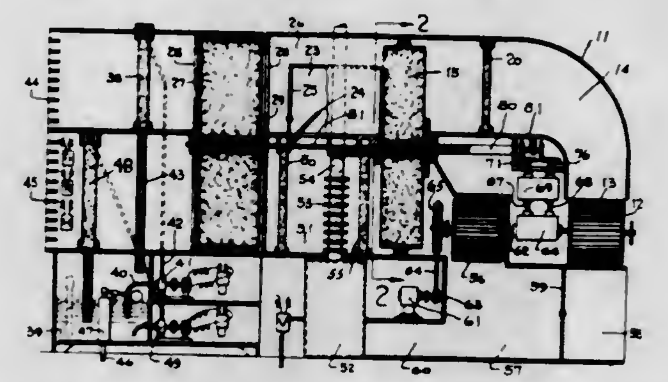

substantially filling said casing, and being held substantially immovable relative to the casing; and by the fact that each level of the packing, when it passes through each passage, is disposed in the same relative position to the other levels of the packing as when it passes through the other passage, and that the air in each passage is impelled through these levels in an order inverse to the passing of the air through these levels in the other passage.

3,398,511
SEALING MEANS FOR BAND FILTERS
Karl Axel Göran Gustavsson, Enkoping, Sweden, assignor to Aktiebolaget Bahco, Enkoping, Sweden, a Swedish corporation
Filed June 29, 1966, Ser. No. 561,562
Claims priority, application Sweden, July 2, 1965, 8,815/65
5 Claims. (Cl. 55—290)

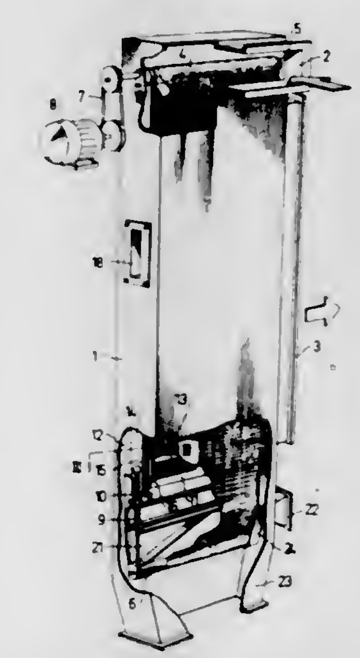

An apparatus for filtering air by a continuous filter band with the inner space between the opposite runs of the filter band being effectively sealed from the outer space around the band by longitudinally extending plate walls. Between the two outermost walls is provided a high pressure channel and between the two innermost is provided a low pressure channel; the filter band being pressed against the edge of the innermost one of the walls. The constant flow of air from the high pressure channel outwardly to the outer space and inwardly to the inner space around the band effectively forms a seal by preventing

the entry of uncleaned air into the inner space from which the clean air is withdrawn. In the case where the pressure of the air to be cleaned in the outer space is less than atmospheric, the air within the high pressure channel can be supplied by connection to the atmosphere.

3,398,512
CHROMATOGRAPHY APPARATUS
Gerald Perkins, Jr., and Alfred B. Carel, Ponca City, Okla., assignors to Continental Oil Company, Ponca City, Okla., a corporation of Delaware
Filed Apr. 18, 1966, Ser. No. 543,151
4 Claims. (Cl. 55—386)

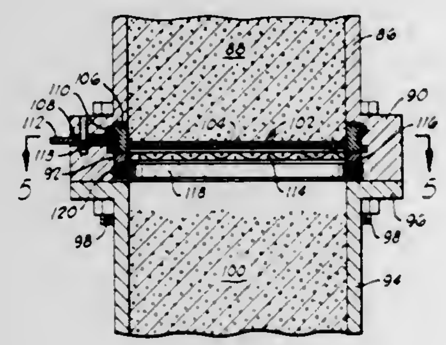

Gradients in a chromatography column are corrected by means comprising packing of varying density or thermal conductivity, or packing support screens of variable porosity.

3,398,513
SCRUBBER APPARATUS
David L. Thompson, 2019 E. Wardlow, Long Beach, Calif. 90807
Filed Jan. 9, 1967, Ser. No. 608,217
2 Claims. (Cl. 55—449)

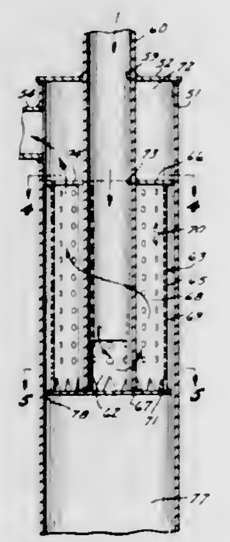

A scrubber including a vertically elongated outer container and a separator disposed within the container and having perforated vertical walls telescopically arranged relative to the vertical walls of the container and cooperating therewith to form an isolation chamber. A vertically extending flow directing web projects inwardly from a vertical wall of the separator. The separator inlet is in the lower portion of the separator and on one side of the web while the separator outlet is in the upper portion of the separator and on the side of the web opposite the inlet whereby, when a vacuum is applied to the outlet and fluid is introduced through the inlet, such fluid will be pulled spirally upwardly around the web and in an arcuate path tangential to the inner surface of the perforated wall to cause relatively dense foreign material suspended in the fluid to pass through the perforations and into the isolation chamber while the remaining fluid will flow upwardly through the outlet.

3,398,514
POWER MOWER WITH GRASS CATCHER
Frank N. Nolan, 1630 44th St., West Palm Beach, Fla. 33407
Filed Apr. 28, 1966, Ser. No. 545,938
10 Claims. (Cl. 56—25.4)

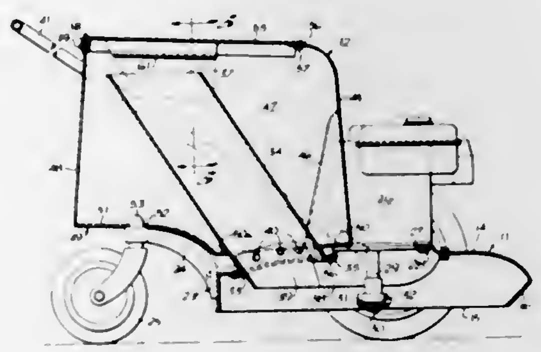

1. In a rotary power mower-grass catcher combination, the combination comprising, a generally circular housing member having an upper deck portion and a downwardly-extending peripheral skirt, a pair of main support wheels, means journalling said support wheels at diametrically-opposed side portions of said housing member, a drive motor mounted centrally upon said upper deck portion of said housing member and having a drive shaft projecting vertically through a central opening in said upper deck portion, an elongated cutter blade centrally affixed to said drive shaft at the underside of said upper deck portion for rotation in a plane perpendicular to the rotational axis of said drive shaft, outer edge portions of the trailing edges of said cutter blade being curved upwardly in the direction of the underside of said upper deck portion to provide upwardly-directed blower action as the blade is rotated, an auxiliary wheel, mechanism journalling said auxiliary wheel with respect to sad housing at a position to the rear of said diametrical axis of said pair of main support wheels, a catcher having a bottom wall, front and back walls and side walls and having an opening at the top, a cover removably attached to said catcher and adapted to close said opening means for removably supporting said catcher upon said upper deck portion at a position above and between said drive motor and said auxiliary wheel, and conduit means communicating between the underside of said upper deck and the interior of said catcher for conveying grass and debris blown by the blower action of said cutter blade.

3,398,515
TOPPING MECHANISMS FOR CANE HARVESTERS
Roy Cecil Ash, Ingham, Queensland, Australia, assignor to International Harvester Company, a corporation of Delaware
Filed Dec. 27, 1965, Ser. No. 516,467
Claims priority, application Australia, Dec. 29, 1964, 53,420/64
7 Claims. (Cl. 56—63)

1. A topping mechanism for a cane harvester comprising a frame having a rotary cutter mounted thereon, a pair of spaced rotary gathering devices connected to said frame and located forwardly of the cutter and adapted to direct the cane tops inwardly and rearwardly between the

gathering devices toward the cutter, a reversible motor mounted on said frame, means coupling said reversible motor to said rotary cutter such that the rotary cutter is driven in the same direction as the rotary motor, a pair of stub shafts journalled on said frame, said stub shafts having engaging gears fixed thereto so that the shafts rotate in opposite directions, a one-way clutch associated

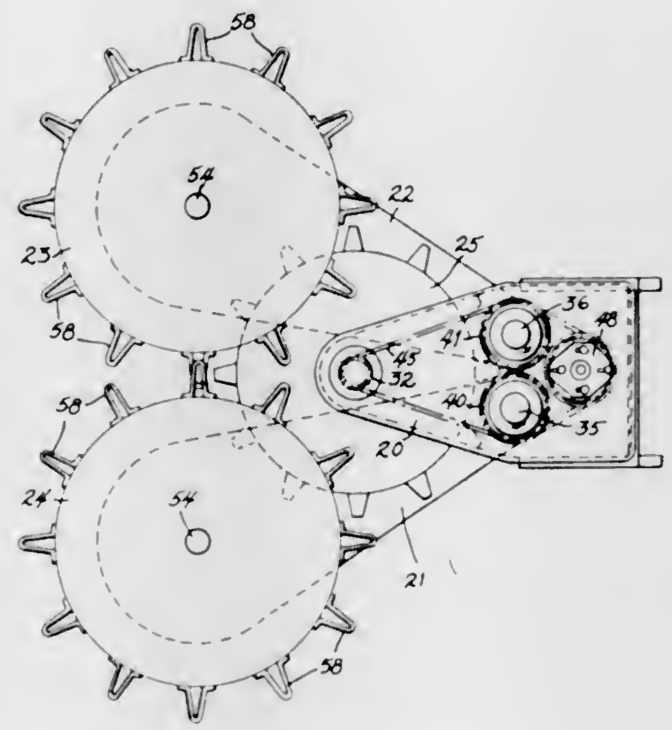

with each of said stub shafts, said one-way clutches arranged to transmit rotary motion to said stub shafts in opposite directions, means coupling said reversible motor to said stub shafts through said one-way clutches such that said stub shafts rotate in only one direction regardless of the direction of rotation of said reversible motor, and means for transmitting the rotary movement of said stub shafts to said rotary gathering devices.

3,398,516
BASE CUTTER HEIGHT INDICATORS FOR CANE HARVESTERS
Donald Jonathan Quick, Manifold Heights, Geelong, Victoria, Australia, assignor to International Harvester Company, Chicago, Ill., a corporation of Delaware
Filed Dec. 27, 1965, Ser. No. 516,589
Claims priority, application Australia, Dec. 29, 1964, 53,421/64
4 Claims. (Cl. 56—208)

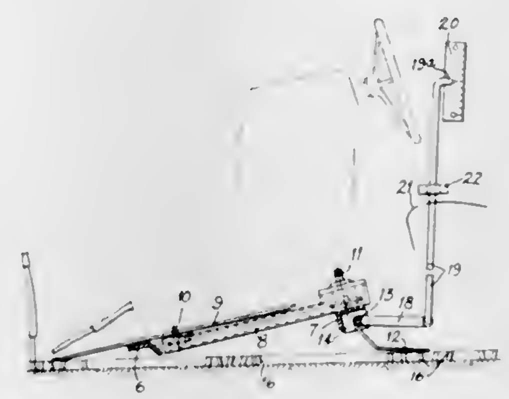

1. A base cutter height indicator for a cane harvester of the type having a cutter frame supporting a vertically adjustable base cutter on the forward end thereof comprising: a skid pivotally mounted adjacent the rear end on the cutter frame, the free end of said skid adapted to trail the swath of the adjustable base cutter and to engage the stubble of the cut cane and the soil surface between stubble, an indicator scale mounted on the cane harvester for observation by the operator, an indicator mounted for movement across said indicator scale, and means connecting said pivotally mounted skid to said indicator such that pivotable movement of said skid will cause movement of the indicator over said indicator scale.

3,398,517
LAWNMOWER BLADE
Abraham L. Freedlander, Dayton, Ohio, and Wayne C. Garrett and Robert E. Matthews, Waynesville, N.C., assignors to Dayco Corporation, Dayton, Ohio, a corporation of Delaware
Filed July 21, 1967, Ser. No. 655,195
The portion of the term of the patent subsequent to Sept. 26, 1984, has been disclaimed
3 Claims. (Cl. 56—295)

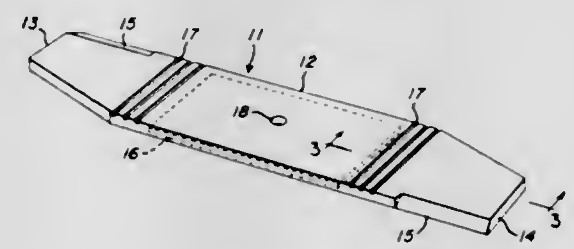

A flexible elastomeric lawnmower blade having transverse grooves in the upper or lower surfaces (or both) of the arms.

3,398,518
TWO-FOR-ONE TWISTING MACHINE
Klaus Nimtz, Krefeld, and Gustav Franzen, Neersen, near Krefeld, Germany, assignors to Palitex Project-Company G.m.b.H., Krefeld, Germany
Filed Feb. 14, 1967, Ser. No. 616,002
Claims priority, application Germany, Feb. 21, 1966, P 38,825
19 Claims. (Cl. 57—34)

The present invention concerns a two-for-one twisting machine having incorporated therein singeing means located on the path of the thread from the delivery bobbin to a winding-up spool, the arrangement being such that the thread portions passing by the singeing means in addition to the advancing movement from said bobbin to said spool carry out a movement relative to the singeing means either transverse or in the opposite direction with regard to the said singeing means.

3,398,519
TRANSPORTING APPARATUS FOR THE TUBE CHANGER OF A TEXTILE MACHINE
Gerhard Haussmann, Ebersbach-Sulpach, Germany, assignor to Zinser-Textilmaschinen Gesellschaft mit beschrankter Haftung, Ebersbach (Fils), Germany
Filed Sept. 28, 1967, Ser. No. 671,345
Claims priority, application Germany, Sept. 29, 1966, Z 12,445
10 Claims. (Cl. 57—52)

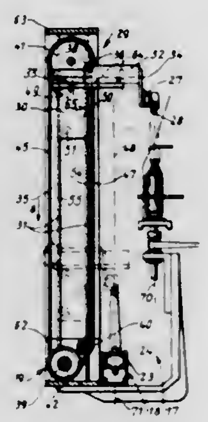

Full tubes are doffed by gripper means from textile spindles located in a first plane and placed on tube holders located in a second parallel plane, whereupon empty tubes are taken from the tube holders and donned on the spindles. The gripper means are mounted on a carriage which is movable on another carriage transverse to the planes, and with the other carriage parallel to the planes, and an endless chain is connected to the first mentioned carriage to move the gripper means between positions cooperating with the full tubes on the spindles and the empty tubes on the tube holders.

3,398,520
BOBBIN DONNING MECHANISM
Leo L. Chabot, Cumberland, R.I., and Herman Haagsma, Whitinsville, Mass., assignors, by mesne assignments, to John Donald Marshall and Horace L. Bomar as Trustees of the Carolina Patent Development Trust
Filed Feb. 14, 1967, Ser. No. 616,006
8 Claims. (Cl. 57—53)

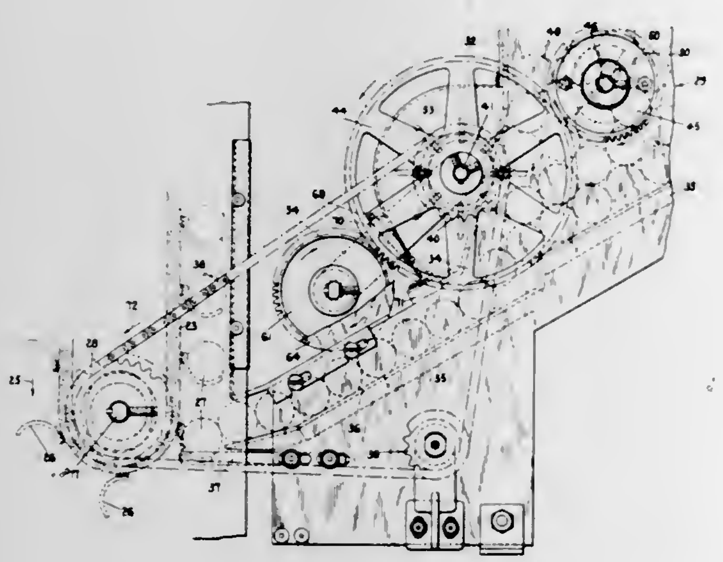

A warp bobbin donning mechanism movable along the rail of a spinning frame and adapted to impale a supply of empty warp bobbins carried thereby on a row of spindles forming a part of said spinning frame.

3,398,521
TEXTILE MACHINE
Charles C. Bell, Warwick, and Kurt W. Niederer, Saunderstown, R.I., assignors to Leesona Corporation, Warwick, R.I., a corporation of Massachusetts
Filed May 8, 1967, Ser. No. 636,732
19 Claims. (Cl. 57—53)

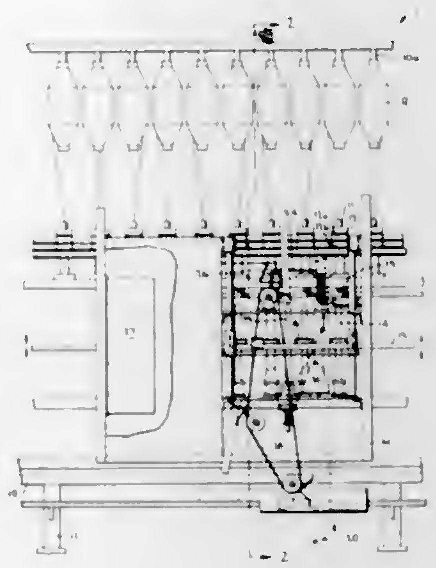

An automatic spinning unit comprising a spinning machine having a plurality of stations, each comprising a roving supply, yarn guide means, and a bobbin for taking up spun yarn, and a patrolling tender is described. The patrolling tender is programmed to completely service the plurality of spinning stations on the spinning machine including doffing a bobbin, donning a bobbin having a partial yarn bunch, or donning a bare bobbin upon which a yarn bunch is subsequently applied from an external source, and joining the yarn from the yarn bunch with the roving. As preferred embodiments, yarn is supplied to a bare bobbin from an external source as part of the operation of the automatic unit, and thereafter the yarn end joined with the roving.

3,398,522
TEXTILE MACHINE
Kurt W. Niederer, Saunderstown, R.I., assignor to Leesona Corporation, Warwick, R.I., a corporation of Massachusetts
Filed May 8, 1967, Ser. No. 636,962
15 Claims. (Cl. 57—53)

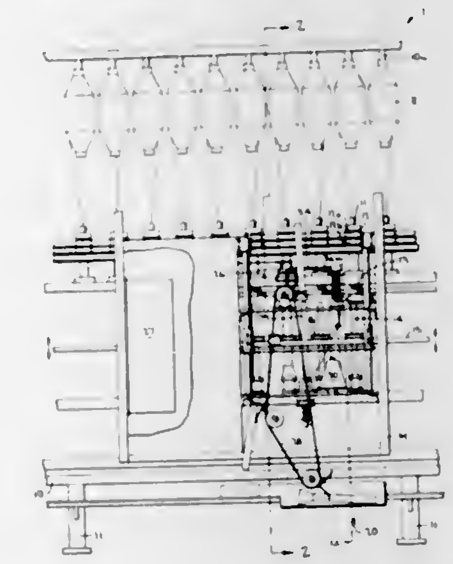

An automatic spinning unit comprising a spinning machine having a plurality of stations, each comprising a roving supply, yarn guide means, and a bobbin for taking up spun yarn, and a partolling tender is described. The patrolling tender is programmed to completely

service the plurality of spinning stations on the spinning machine including doffing a bobbin, donning a bobbin having a partial yarn bunch, or donning a bare bobbin upon which a yarn bunch is subsequently applied from an external source, and joining the yarn from the yarn bunch with the roving. As preferred embodiments, yarn is supplied to a bare bobbin from an external source as part of the operation of the automatic unit, and thereafter the yarn end joined with the roving.

3,398,523
METAL CHAINS AND BRACELETS, E.G. FOR WRIST WATCHES
Ng Chue Meng, Kowloon, Hong Kong, assignor to Stelux Manufacturing Co. Ltd., San Po King, Kowloon, Hong Kong, a corporation of Hong Kong
Filed Feb. 2, 1966, Ser. No. 524,423
1 Claim. (Cl. 59—80)

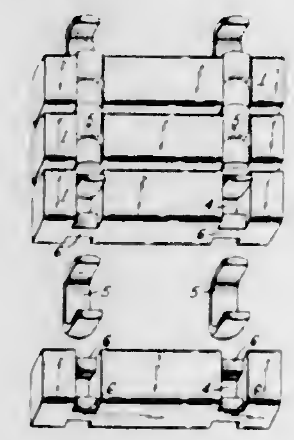

A wrist band or bracelet is formed of a plurality of solid metal bars each slotted in its upper and lower surfaces near to each end, and apertured between the slots at each end, linked together in close side-by-side relationship by metal rings each extending through the apertures of two adjacent bars. Adjacent sides of the bars may be in the form of flat walls slightly relatively inclined.

3,398,524
ROTARY ENGINE WITH AFTERBURNER
Maurice B. Leising, Clawson, and John J. Lenosky, Detroit, Mich., assignors to Chrysler Corporation, Highland Park, Mich., a corporation of Delaware
Filed Jan. 27, 1967, Ser. No. 612,273
10 Claims. (Cl. 60—29)

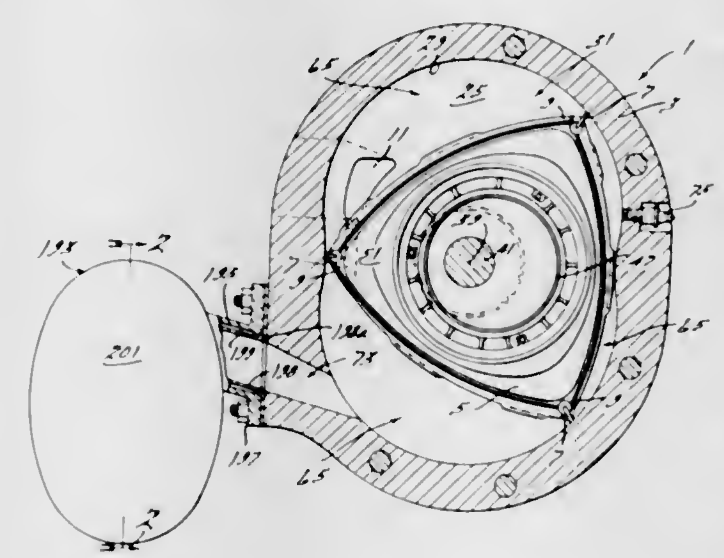

A rotary internal combustion engine in which the exhaust products are delivered through the exhaust port to a reactor chamber or after burner from which the combustion products pass in a path extending around the re-

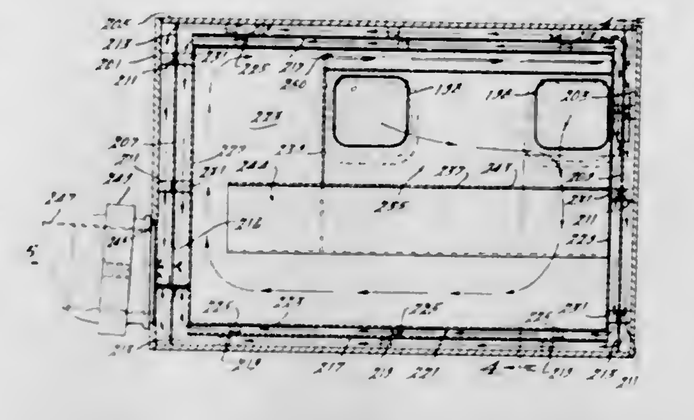

actor chamber to the exhaust pipe to form an insulating layer or blanket around the reactor chamber.

3,398,525
COMBINED MULTISTAGE POWER PLANT HAVING A ROTARY COMPRESSOR SERVING AS THE LOW PRESSURE STAGE AND A ROTARY PRESSURE-WAVE MACHINE SERVING AS THE HIGH PRESSURE STAGE
Ernst Jenny, Baden, Aargau, Switzerland, assignor to Aktiengesellschaft Brown, Boveri & Cie, Baden, Switzerland, a joint-stock company
Filed July 21, 1966, Ser. No. 567,005
Claims priority, application Switzerland, July 28, 1965, 10,542/65
4 Claims. (Cl. 60—39.17)

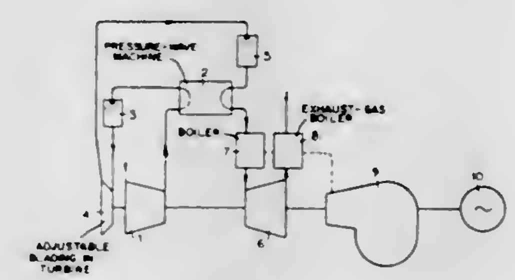

A combined multistage power plant includes a conventional rotary compressor serving as the low pressure stage and a pressure-wave machine serving as the high pressure stage. Compressed gas at the discharge side of the compressor is led through the compression stage of the pressure-wave machine. After heating, all of the compressed and hot working gas is then partially expanded such as in a gas turbine to give off some power and is then led through the expansion stage of the pressure wave machine, all of the gas then being passed into an engine such as, for example, a second gas turbine operating on the same shaft as the compressor and first turbine. In lieu of the turbine, an MHD generator can be utilized to receive the gas from the pressure-wave machine. The heating means for the gas can be either a conventional combustion chamber or an atomic reactor.

3,398,526
GAS TURBINE AND FUEL DELIVERY MEANS THEREFOR
Emery E. Olah, St. Charles, Ill., assignor to Turbine Products, Inc., St. Charles, Ill., a corporation of Illinois
Filed July 21, 1966, Ser. No. 566,857
8 Claims. (Cl. 60—39.28)

A gas turbine engine fuel system wherein the fuel reservoir is maintained under air pressure at a substantially constant ratio with the combustion chamber pressure. The

engine compressor delivers air to the chamber where it is heated by burning the fuel delivered thereto from the reservoir. The heated air motivates a turbine whose shaft drives the compressor. Said shaft also drives an impeller

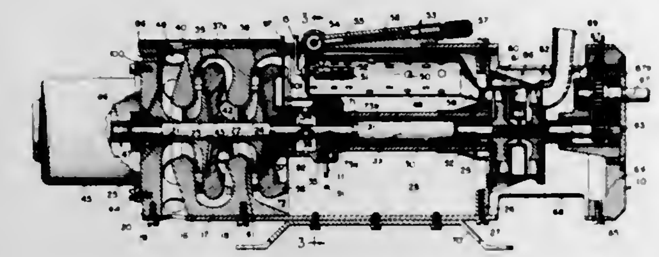

which compresses further some of the air compressed by said compressor and delivers it to the reservoir, the pressure in the latter being controlled by regulating means responsive to the differential in pressures in the chamber and reservoir.

3,398,527
CORRUGATED WALL RADIATION COOLED COMBUSTION CHAMBER
Ronald J. Taylor, Granada Hills, and Richard M. Dumke, Inglewood, Calif., assignors to the United States of America as represented by the Secretary of the Air Force
Filed May 31, 1966, Ser. No. 554,945
1 Claim. (Cl. 60—39.66)

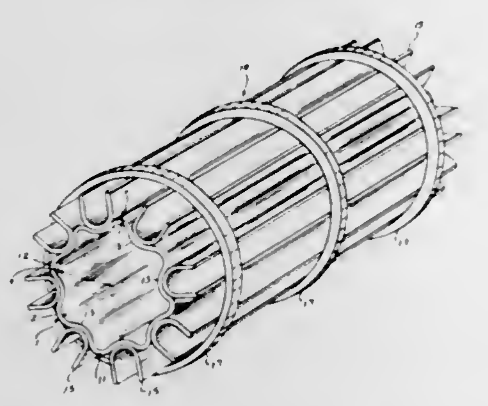

1. A radiation cooled combustion chamber, comprising: a hollow elongated enclosure member having a plurality of longitudinally extending corrugations formed therein; a plurality of spaced angular tension reacting members surrounding said enclosure member; a plurality of U-shaped stiffener members extending between said corrugated enclosure member and said annular tension reacting members with the closed end of said U-shaped stiffener members being located in contact with the external concave portion of the corrugations of said enclosure member.

3,398,528
EVAPORATION TYPE BURNER
Harumitsu Nakamura and Shoichi Tsuji, Tokyo-to, Japan, assignors to Ishikawajima-Harima Jukogyo Kabushiki Kaisha, Tokyo-to, Japan, a Japanese company
Filed Oct. 3, 1966, Ser. No. 583,574
Claims priority, application Japan, Oct. 5, 1965, 40/60,868
5 Claims. (Cl. 60—39.71)

An evaporation type burner for jet engines or gas turbines. The burner has a pair of combustion chamber walls and a pair of evaporation walls are situated between the pair of combustion chamber walls at the upstream regions of the latter. The upstream ends of the combustion chamber walls are respectively connected with the upstream ends of the evaporation walls to define therewith a pair of combustion spaces which are closed in the upstream direction and communicate only with the space between the combustion chamber walls downstream of the evaportion walls. A separation wall means is situated between the pair of evaporation walls and a pair of fuel-supply means direct fuel between the pair of evaporation walls on opposed sides of the separation wall means, the upstream end of the space between the evaporation walls

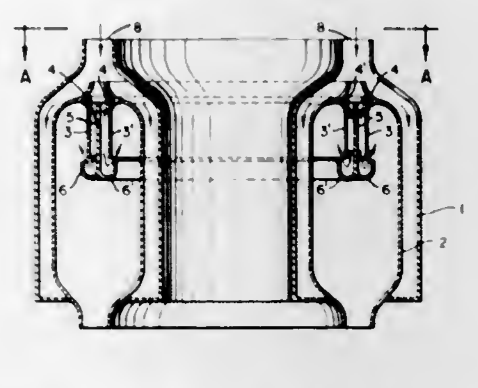

communicating with an air inlet so that a mixture of fuel and air will form at opposed sides of the separation wall means along the inner surfaces of the evaporation walls. The separation wall means terminates in a pair of reversing baffles for directing the fuel-air mixtures back in an upstream direction to the combustion spaces at the outer surfaces of the evaporation walls so that burning which takes place in the combustion spaces will heat the evaporation walls to promote the evaporation of fuel films flowing along the evaporation walls at their inner surfaces.

3,398,529
ARRANGEMENT OF NOZZLE BODIES OF HOOK-LIKE FUEL INJECTION NOZZLES AT THE COMBUSTION CHAMBER OF GAS-TURBINE DRIVE UNITS
Christian Schmitz, Post Schorndorf, Engelberg, and Werner A. Bruder, Neckarrems, Germany, assignors to Daimler-Benz Aktiengesellschaft, Stuttgart-Unterturkheim, Germany
Filed Sept. 6, 1966, Ser. No. 577,515
Claims priority, application Germany, Sept. 16, 1965, D 48,217
22 Claims. (Cl. 60—39.72)

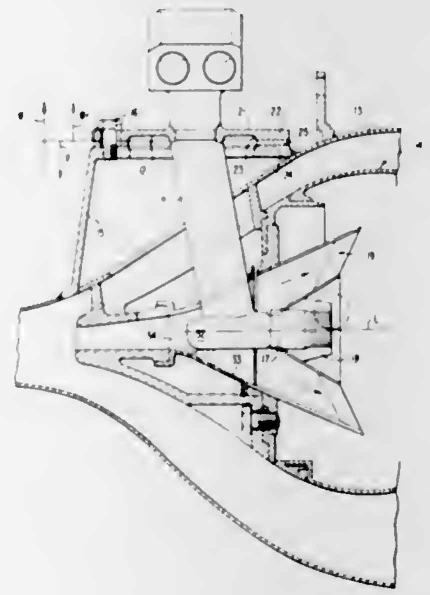

An arrangement of the nozzle body of hook-shaped fuel injection nozzles at the combustion chamber of gas-turbine drive units by means of a securing flange provided at the nozzle body which is detachably connected with the combustion chamber outer wall whereby the nozzle mouthpiece is inserted into the flame holder. The securing flange is constructed of thin wall spring steel to resiliently absorb the thermal expansion differences between the nozzle body and the combustion chamber system so that the nozzle mouth piece may be radially and axially fixed to the flame holder without adversely affecting the flame by thermal distortions.

3,398,530
HYDROSTATIC TRANSMISSION
David N. Prevallet, Auburn, and William T. Stephens, Fort Wayne, Ind., assignors to Borg-Warner Corporation, Chicago, Ill., a corporation of Illinois
Filed May 24, 1966, Ser. No. 552,560
9 Claims. (Cl. 60—53)

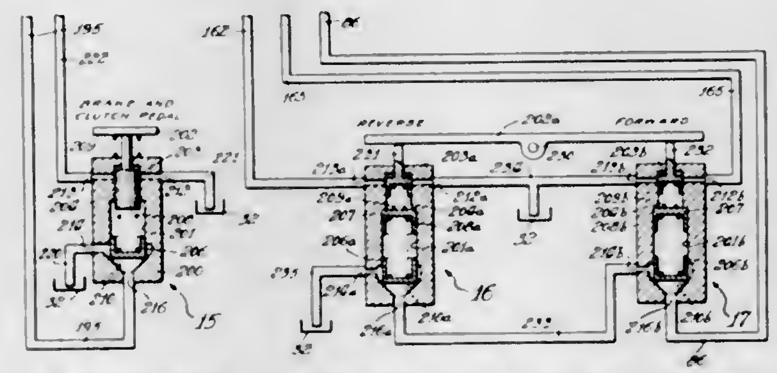

A hydrostatic transmission for a vehicle utilizing a variable volume pump and a variable volume motor for its propulsion whereby rapid stopping, starting and reversal of direction of the vehicle are provided and including valve means which provide dynamic braking of the vehicle when the hydraulic motor over-speeds the hydraulic pump.

3,398,531
MECHANICAL FEATHERING CONTROL AND AUTOMATIC OVERSPEED CONTROL FOR A HYDROSTATIC TRANSMISSION
William C. Swanson, Clarendon Hills, and Donald W. Moyer and Rodger W. Asmus, Downers Grove, Ill., assignors to International Harvester Company, Chicago, Ill., a corporation of Delaware
Filed Oct. 11, 1966, Ser. No. 585,902
10 Claims. (Cl. 60—53)

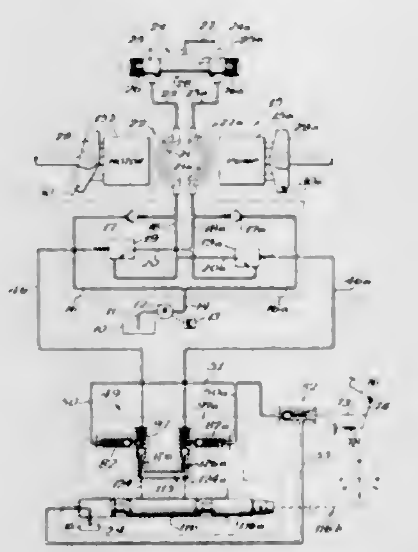

An automatic overspeed control for a hydrostatic transmission having a pump and motor connected by a hydraulic circuit and including valve means for dumping hydraulic fluid under pressure to the reservoir when the flow of power through the transmission is reversed, and mechanical linkage means connected to the valve means for interrupting the flow of power through the transmission and for providing feathering control of the transmission:

3,398,532
HYDRODYNAMIC TORQUE TRANSMITTING UNIT WITH VARIABLE PITCH BLADING
Earl L. Egbert, Northville, and Paul D. Stevenson, Plymouth, Mich., and Wayne D. Sundberg, Albuquerque, N. Mex., assignors to General Motors Corporation, Detroit, Mich., a corporation of Delaware
Filed Mar. 22, 1967, Ser. No. 625,103
10 Claims. (Cl. 60—54)

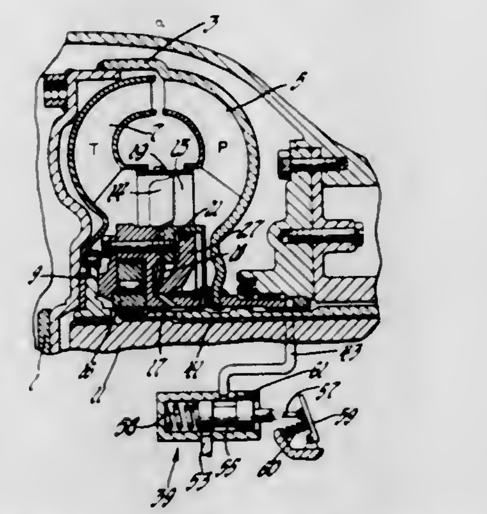

A hydrodynamic torque converter having a control motor mechanism movably mounted in the stator hub which can be moved by control forces to a first set position to turn stator blades to a closed, high-angle position for reducing torque transmission through the converter, or to a second set position to turn the blades to a fully open, low-angle position for highly efficient torque transmission by the converter or to an intermediate position established by a yieldable stop mechanism in response to increased torque demand to turn the blades to an intermediate angle position for increased torque multiplication by the converter.

3,398,533
CLOSED AIR COMPRESSOR AND MOTOR SYSTEM
Michael H. Wolfbauer, Jr., 20455 Woodland, Harper Woods, Mich. 48236
Filed Nov. 13, 1961, Ser. No. 161,759
1 Claim. (Cl. 60—57)

1. In an air pressure supply system for air-operated welding guns and the like work-devices which are controlled by multi-way valves, the improvement comprising an air compressor, a pressure receiver for storing compressed air and an exhaust receiver for storing exhaust air all mounted together in a unitary arrangement which is essentially portable by which pressure air may be made in situ at the welding machine in lieu of transporting plant air great distances, said arrangement comprising means for collecting the exhaust air from the multi-way valves to store in the exhaust receiver and for conveying the air collected in the exhaust receiver into the intake of the air compressor whereby the system is substantially closed so that discharge of exhaust air into the atmosphere is eliminated, the arrangement characterized in that the exhaust receiver serves as a mount for the compressor and houses the pressure receiver in close fitting enclosing relation to save space and for safety, the two receivers being air storage tanks having substantially the same order of air storage capacity.

3,398,534
INDUSTRIAL SYSTEM AND PROCESS UTILIZING TURBO-COMPRESSOR UNIT
Joseph S. Hucks, Jr., West Hartford, Conn., assignor to Combustion Engineering, Inc., Windsor, Conn., a corporation of Delaware
Filed Nov. 18, 1966, Ser. No. 595,389
8 Claims. (Cl. 60—95)

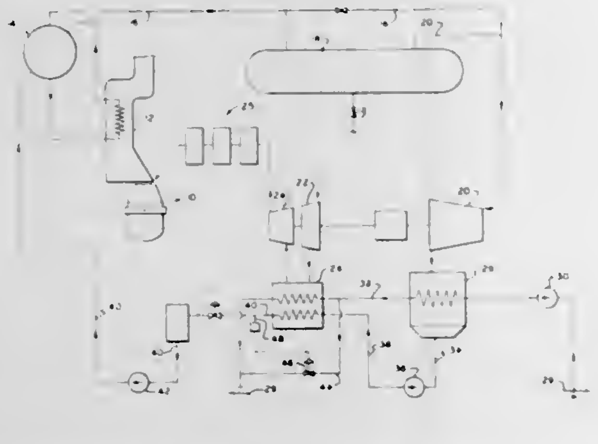

An apparatus is associated with an industrial process which utilizes large quantities of gas compressed to a high pressure. There is provided a turbo-compressor unit driven by steam from a steam generator that may receive its heat input from a portion of the process, with this unit producing the compressed gas used in the process. The turbine has associated with it a condenser and the compressor has an intercooler. The improvement of the invention involves the method and apparatus whereby the cooling water from the condenser is conveyed through the intercooler and the condensate from the condenser is also conveyed through the intercooler but maintained separate from the condenser water. This condensate is then conveyed to the steam generator as the feed therefor. A refinement in the organization and process involves regulatingly bypassing a portion of the condenser water around the intercooler in response to the temperature of the condensate conveyed from the intercooler.

3,398,535
ENGINE SUPPORTING STRUCTURE
William B. Campbell and Martin Carl Hemsworth, Cincinnati, and Augustus M. Helmintoller, Loveland, Ohio, assignors to General Electric Company, a corporation of New York
Filed May 25, 1966, Ser. No. 552,755
6 Claims. (Cl. 60—226)

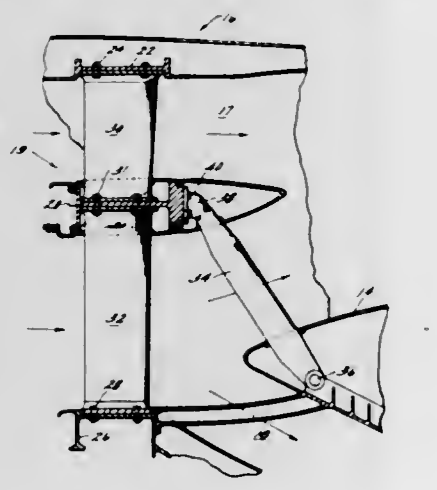

A supporting structure for the cowling of the fan portion of a turbofan propulsion power plant transmits loads from the fan to a core engine portion through V-struts connected to a ring-like member disposed within the cowling between inner and outer strut stator vane portions and connected to a wall of the core engine.

3,398,536
FLUID FLOW NOZZLE HAVING TEMPERATURE COMPENSATING MEANS
Arthur B. Stolins, Jr., Costa Mesa, Calif., assignor to Philco-Ford Corporation, a corporation of Delaware
Filed May 25, 1965, Ser. No. 458,694
18 Claims. (Cl. 60—253)

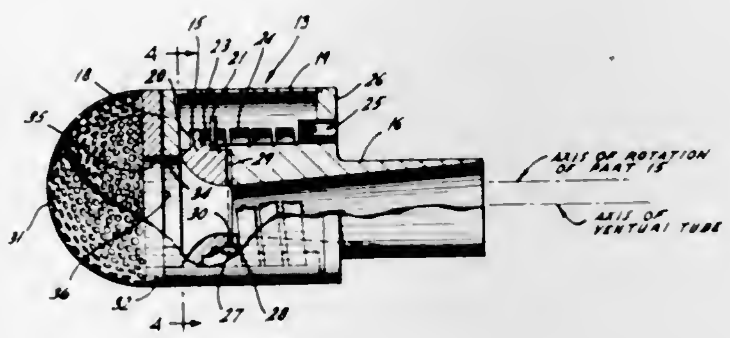

6. For use with a gas generating device including a combustion chamber having therein a solid fuel charge adapted to burn at a rate dependent upon the temperature of the charge at the time of its ignition, temperature compensating nozzle means, comprising: axially aligned convergent and divergent nozzle sections cooperably disposed to form a venturi tube in gas flow communication with said chamber; bearing means providing for rotation of said convergent section about an axis displaced laterally with respect to the axis of said venturi tube thereby to vary the effective throat area; and thermally activated means operably coupled with said convergent section to rotate the latter in response to temperature changes in the fuel charge, whereby to establish a predetermined throat area effective to compensate for the different burning rates of the fuel charge.

3,398,537
SOLID-FUEL CONTROLLABLE-THRUST PROPULSION DEVICE
Jean E. Picquendar, Saint-Remy-les-Chevreuses, France, assignor to Compagnie Francaise Thomson Houston-Hotchkiss Brandt, Paris, France
Filed May 31, 1966, Ser. No. 553,814
Claims priority, application France, June 9, 1965, 19,989
14 Claims. (Cl. 60—254)

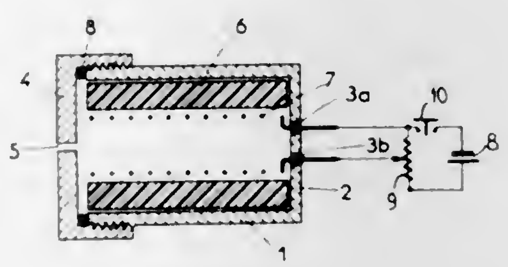

The device comprises a casing (1–4) with a jet discharge orifice (5) and a tubular charge (6) of solid fuel in the casing. An electric resistance heater (7) is positioned adjacent the inner surface of the tubular charge and connected to an external circuit including source (8), switch (10) and potentiometer (9). The fuel charge has a composition such as to undergo a moderately exothermic chemical reaction on application of radiant heat thereto which reaction is not sustained in the absence of said applied heat. Thus operation of switch (10) will serve to initiate and arrest the generation of thrust from the device.

3,398,538
COMBUSTION APPARATUS
Russell S. Hall, John R. Patten, and Clarence Bowers, Indianapolis, Ind., assignors to General Motors Corporation, Detroit, Mich., a corporation of Delaware
Filed Aug. 14, 1959, Ser. No. 833,884
7 Claims. (Cl. 60—267)

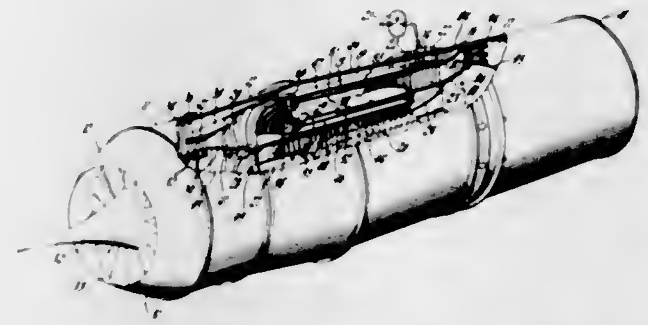

1. A combustion system for vaporizable fuel comprising, in combination, means for supplying liquid fuel, an annular heat exchanger for vaporizing the fuel, a turbine supplied with vaporized fuel by the heat exchanger and driven thereby, an annular axial-flow combustion apparatus including outer and inner annular walls disposed around the turbine, mutually circumferentially spaced recurved fuel ducts connecting the outlet of the turbine to one end of the combustion apparatus, the heat exchanger being disposed at the other end of the combustion apparatus for flow of mixed fuel and combustion products therethrough, an air compressor driven by the turbine, a duct connecting the outlet of the compressor to the combustion apparatus enclosing the said fuel ducts and supplying air to the combustion apparatus through the spaces between the ducts, outer and inner annular shrouds within the combustion apparatus defining a combustion space and defining annular fuel passages between the shrouds and the walls, and two annular fuel manifolds connecting the said ducts with the said annular fuel passages.

3,398,539
LAWN AND GARDEN-SURFACE WATER DEFLECTORS
Beaser G. Fore, P.O. Box 181, Brookneal, Va. 24528
Filed Apr. 29, 1966, Ser. No. 546,449
1 Claim. (Cl. 61—2)

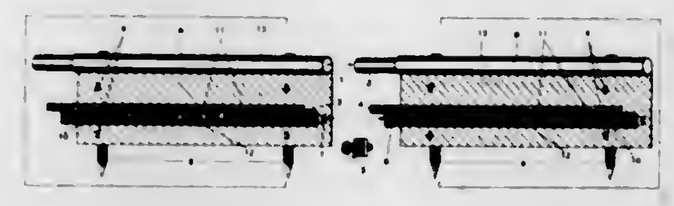

A surface water deflector assembly wherein a plurality of sections are placed end to end and into the soil in upright position. The sections are provided with channels that are flush with the soil surface and are joined end to end to receive surface water flowing on one side of the assembly to thereby protect the soil on the other side of the assembly from such water flow.

3,398,540
MULTILEVEL BOAT HARBOR
Robert L. Toben, 226 E. Ontario, Chicago, Ill. 60611
Continuation-in-part of application Ser. No. 543,163, Apr. 18, 1966. This application Nov. 17, 1966, Ser. No. 595,230
2 Claims. (Cl. 61—46)

Multilevel boat harbor comprising one or more raised water-filled boat storing levels. A vertical transportation tower is hydraulically connected with each level. A boat enters the tower and is vertically transported between

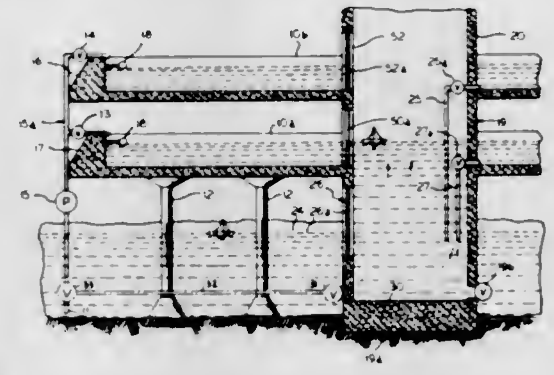

levels by varying the height of the water in the tower. The water height variation is accomplished without using any special pump for the transportation tower.

3,398,541
FREE FLOODING BALLAST SYSTEM FOR OFFSHORE DRILLING RIGS
Maurice B. Thomas, Houston, Tex., assignor to Teledyne, Inc., Hawthorne, Calif., a corporation of Delaware
Filed Dec. 22, 1966, Ser. No. 603,845
7 Claims. (Cl. 61—46.5)

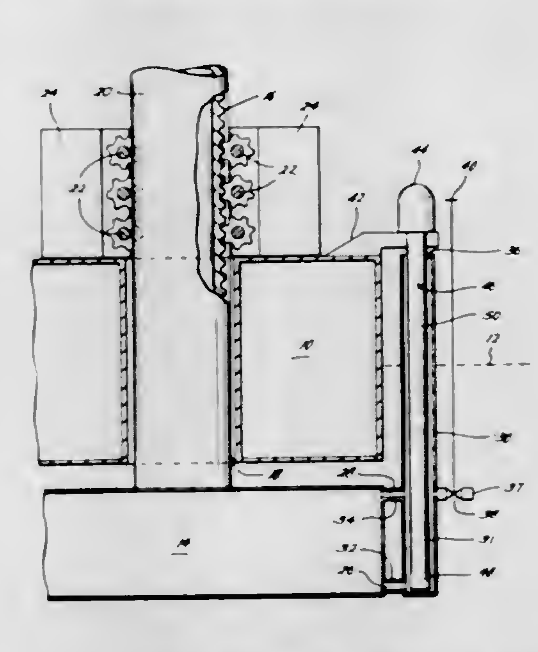

Generally, the present disclosure relates to apparatus utilized to insure the proper ballasting of an offshore drilling rig having an upper and lower hull in which the normally buoyant hull is to be lowered below the surface of water. This is accomplished by having an open inlet and outlet in the lower hull that communicates only with the atmosphere when the hull is in its raised position, but which becomes submerged as the hull is lowered to the bottom, thus allowing the inflow of water to ballast the hull.

3,398,542
SUBTERRANEAN PLOW
Clarence M. Hansen, East Lansing, Mich., and Louis E. Ott, St. John, Ind.; said Hansen assignor to Board of Trustees, a constitutional corporation operating Michigan State University of Agriculture and applied Science, and said Ott assignor to Standard Oil Company, Chicago, Ill., a corporation of Indiana
Filed Aug. 30, 1966, Ser. No. 576,015
4 Claims. (Cl. 61—72.2)

A subterranean plow has an upright support for attachment to a power source and for being moved through the earth. A plow share depending from the support has

a laterally extending leading arcuate cutting edge terminating in a bottom earth planing portion. Lateral planing side portions are provided to move the earth aside and an upper rearwardly extending portion to create a cavity in the earth under the plow share. Liquid distributing

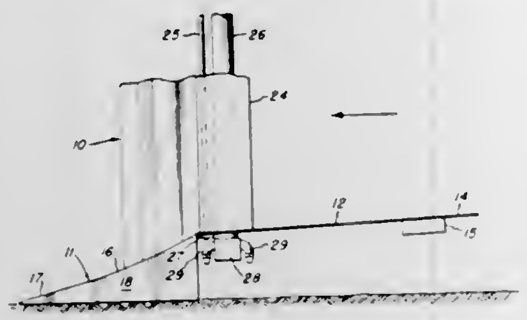

nozzles are disposed beneath the rearwardly extending portion to discharge fluid against the exposed earth of the cavity and which fluid will define an impervious membrane covered with earth as the plow share moves forwardly.

3,398,543
HYDROCARBON GAS LIQUEFACTION BY ADMIXED GAS-LIQUID EXPANSION AND HEAT EXCHANGE
John Leroy Horton, Shreveport, La., assignor to American Machine & Foundry Company, a corporation of New Jersey
Continuation-in-part of application Ser. No. 306,428, Sept. 4, 1963. This application Mar. 23, 1966, Ser. No. 536,911
3 Claims. (Cl. 62—11)

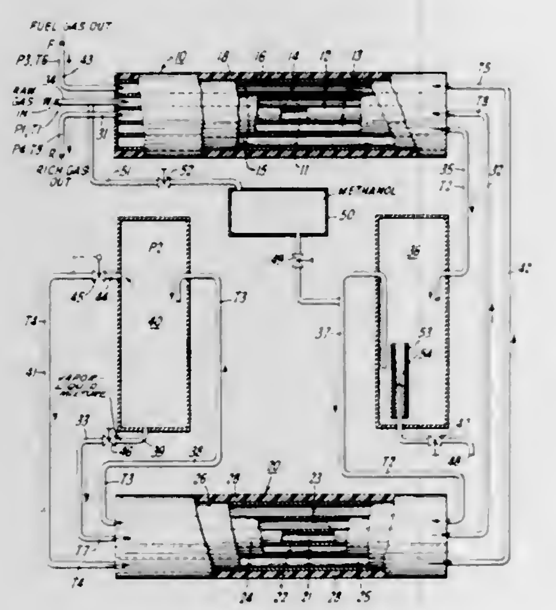

A hydrocarbon feed gas is separated by cooling the feed gas in the intermediate passage of a concentric three passage heat exchanger to condense a portion of the hydrocarbons to form a lighter gaseous component and a heavier liquid component. A separated expanded gaseous component and an expanded gas-liquid admixture is passed in heat exchange with the feed gas in the concentric heat exchanger without permitting liquid to accumulate in a separation zone.

3,398,544
SOLIDIFICATION OF ACIDIC COMPONENTS IN NATURAL GAS
Carl F. Crownover, Ponca City, Okla., assignor to Continental Oil Company, Ponca City, Okla., a corporation of Delaware
Filed July 27, 1966, Ser. No. 568,214
6 Claims. (Cl. 62—12)

Acidic components such as carbon dioxide or hydrogen sulfide are removed from natural gas by first cooling the gas to form a liquid containing at most about 20 percent of the acidic components in the solid form nucleation

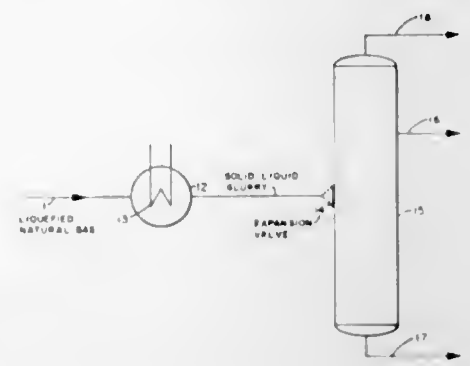

sites, and subsequently flashing the mixture to effect freezing of the remaining acidic components.

3,398,545
HYDROGEN RECOVERY FROM A REFINERY TAIL GAS EMPLOYING TWO STAGE SCRUBBING
Warren L. Nelson, Montreal, Quebec, Canada, and Christopher E. Norton, London, England, assignors to Conch International Methane Limited, Nassau, Bahamas, a Bahamian company
Filed Feb. 4, 1966, Ser. No. 525,081
Claims priority, application Canada, Mar. 19, 1965, 926,040
7 Claims. (Cl. 62—17)

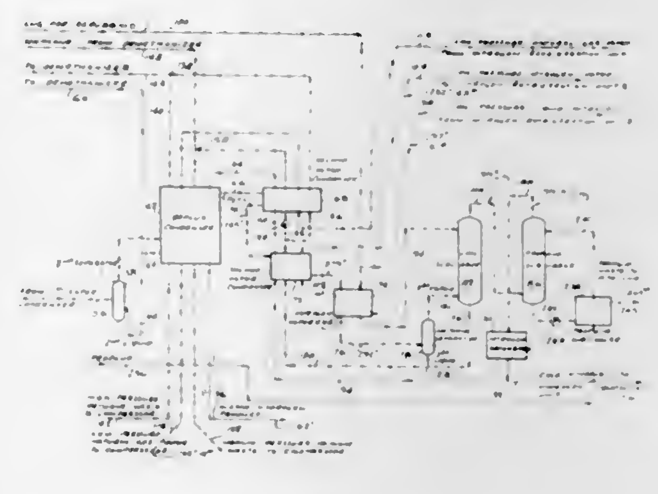

A process for separating hydrogen and hydrocarbons from a refinery tail gas, using the refrigeration potential of available liquid natural gas which is to be gasified as a separate product during the process, and which is also used as a scrubbing agent to remove nitrogen and oxides of carbon from the partially purified hydrogen during the process. Methane is removed from the tail gas by indirect heat exchange with nitrogen which has been cooled by heat exchange with liquid natural gas. A second scrubbing step is employed to substantially remove remaining methane from the hydrogen.

3,398,546
TAIL GAS SEPARATION IN PLURAL STAGES EMPLOYING LIQUID NATURAL GAS REFRIGERANT
Warren L. Nelson, Montreal, Quebec, Canada, and Christopher E. Norton, London, England, assignors to Conch International Methane Limited, Nassau, the Bahamas, a Bahamian company
Filed Feb. 4, 1966, Ser. No. 525,080
Claims priority, application Canada, Mar. 19, 1965, 926,039
4 Claims. (Cl. 62—28)

A process for separating fractions of hydrocarbons from a gaseous mixture, such as a refinery tail gas containing

hydrogen, initially at a super-atmospheric pressure, and at the same time gasifying liquid natural gas by heat exchanging it with the tail gas to initially condense out some

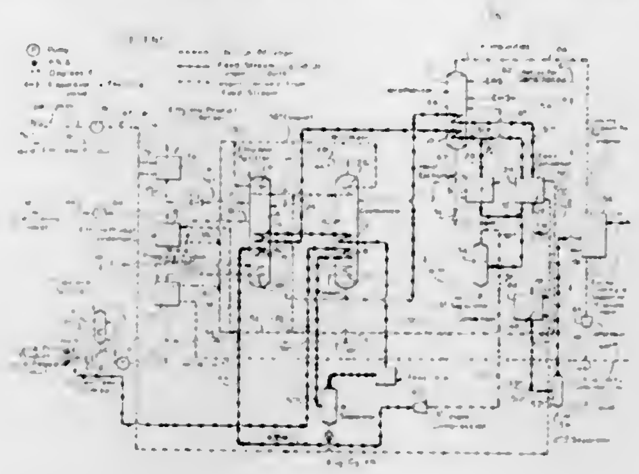

of the hydrocarbons, compressing the uncondensed gas to a higher pressure and further cooling it with liquid natural gas to separate out further portions of hydrocarbon.

3,398,547
PROCESS FOR RECOVERING RELATIVELY PURE WATER FROM SALINE SOLUTIONS
Cedomir M. Sliepcevich and Hadi T. Hashemi, Norman, Okla., assignors, by direct and mesne assignments, of thirty-seven and one-half percent to University Engineers, Inc., Norman, Okla., a corporation of Oklahoma, and sixty-two and one-half percent to E-C Corporation, Wilmington, Del., a corporation of Delaware
Filed Nov. 26, 1965, Ser. No. 509,737
19 Claims. (Cl. 62—58)

1. In a process for recovering fresh water from a saline solution and which encompasses the step of freezing ice crystals from the saline solution by reducing the pressure on the solution to flash therefrom the vapors of a refrigerant selected from the class consisting of water and an organic material substantially immiscible with water, the improvement which comprises:
- mixing with a carrier liquid, the saline solution and ice crystals remaining after flashing, said carrier liquid having the following properties:
  - substantial mutual immiscibility with the saline solution and water;
  - a freezing point below the freezing point of the saline solution;
  - a density less than that of the saline solution and of water;
  - substantial immiscibility in the refrigerant used in freezing ice crystals from the saline solution by flashing the refrigerant to the vapor state;
- separating a substantial portion of the ice and carrier liquid from the saline solution using said density difference to effect said separation, and slurrying the ice crystals in the carrier liquid separated from the saline solution;
- removing occluded saline solution from the ice crystals;
- separating a substantial portion of the removed occluded saline solution from the ice crystals and carrier liquid;
- melting the ice crystals to produce substantially pure water; and
- separating a substantial portion of the substantially pure water from the carrier liquid using the density difference between the pure water and the carrier liquid to effect said separation.

3,398,548
VACUUM FREEZE SOLUTION SEPARATION SYSTEM
Robert Bruce Cox, John H. Davids, and Wallace E. Johnson, Beloit, Wis., assignors to Desalination Plants (Developers of Zarchin Process) Limited, Tel Aviv, Israel, a limited company of Israel
Filed Apr. 20, 1966, Ser. No. 543,907
34 Claims. (Cl. 62—124)

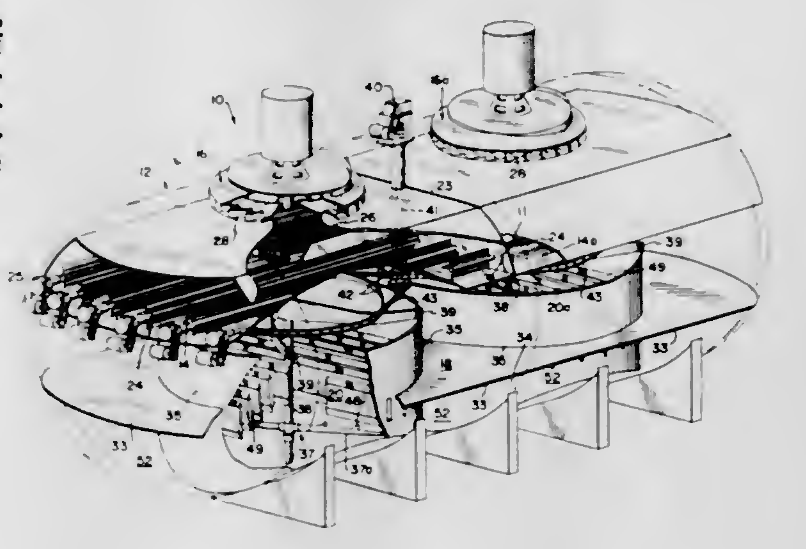

The present invention is directed to separation systems, such as desalination systems, employing the vacuum freezing principle and employing the concept of condensing the solvent vapor on the washed frozen solvent to melt the frozen solvent to thereby produce final product with the system apparatus including the evaporating chamber, condensing and melting chamber and wash separator chamber, all being contained within a common housing and in one aspect with a particular arrangement of the wash separator chamber distributing means.

3,398,549
APPARATUS FOR REGULATING AT LOW TEMPERATURES
Walter Zobel, Oak Ridge, Tenn., assignor to the United States of America as represented by the United States Atomic Energy Commission
Filed Feb. 3, 1967, Ser. No. 614,534
5 Claims. (Cl. 62—129)

A cryostatic system is provided for reducing the temperature of an environment in which semiconductors or other objects may be examined or operated, and for maintaining a selected temperature in the environment for desired periods of time. A highly conductive heat transfer element is partially enclosed in a vacuum chamber. The unenclosed portion is submerged in a cryogen fluid. The vacuum chamber pressure is controlled by a

vacuum pumping system connected to the chamber and a gas flow control element which allows small portions of a gas to diffuse therethrough at a rate necessary to provide a given constant pressure. By controlling the pressure, the rate of heat transfer from the ambient atmos-

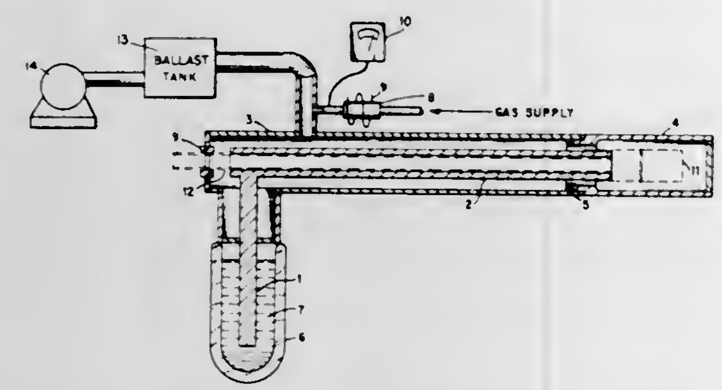

phere is effective in controlling the temperature of a specimen mounted on the warmer end of the heat transfer element thereby maintaining the specimen at a specific low constant temperature which is determined by the measured pressure of the vacuum chamber.

3,398,550
LIQUID SUPPLY CONTROL SYSTEM FOR A BEVERAGE DISPENSER
Charles M. Lents, Dallas, Tex., assignor of one-half to Earl J. Bauer, Dallas, Tex.
Filed Sept. 5, 1967, Ser. No. 665,552
9 Claims. (Cl. 62—179)

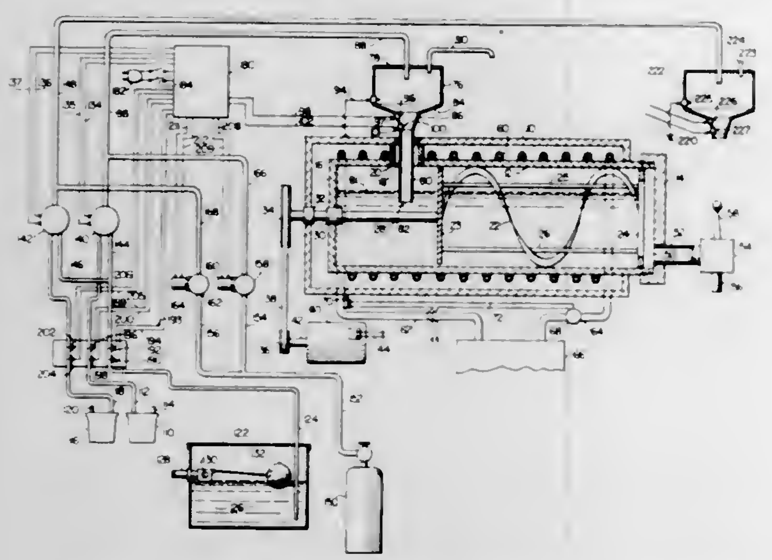

There is shown and described a system for controlling the supply of liquid or fluid ingredients to a carbonated frozen drink machine. The machine has an inlet through which the liquid is supplied, and a plurality of electrodes are employed to detect the level of the liquid within the inlet. Control means connected to the electrodes controls the supply of ingredients to the chamber. Additional electrodes that are connected to the control means are employed in the feeder lines from the ingredient supply tanks to deactivate the system when the supply tanks are exhausted.

3,398,551
COMPRESSOR CONTROL INCLUDING PRESSURE EQUALIZER AND OVERPRESSURE MEANS
Donald Yannascoli, Syracuse, N.Y., assignor to Carrier Corporation, Syracuse, N.Y., a corporation of Delaware
Filed Oct. 3, 1966, Ser. No. 583,759
8 Claims. (Cl. 62—196)

5. In a refrigeration system including a compressor with a first heat exchange coil joined to the discharge side of said compressor, expansion means, and a second heat exchange coil joined to the suction side of said compressor, the combination of, relief passage forming means adapted to communicate said compressor discharge side with said compressor suction side bypassing said system, and control means for said passage means responsive to

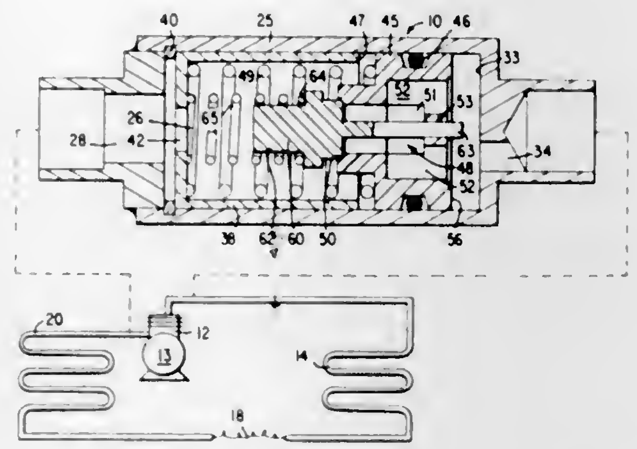

pressure differences between said compressor discharge and suction sides and adapted at one of a predetermined overpressure condition or a predetermined low pressure condition to open said passage means.

3,398,552
BIN WITH CAM SURFACES ENGAGEABLE BY PARTITION WALLS IN INVERTED CONTAINER
Joe P. Pietrzak, Dayton, Ohio, assignor to General Motors Corporation, Detroit, Mich., a corporation of Delaware
Filed Jan. 16, 1967, Ser. No. 609,434
6 Claims. (Cl. 62—320)

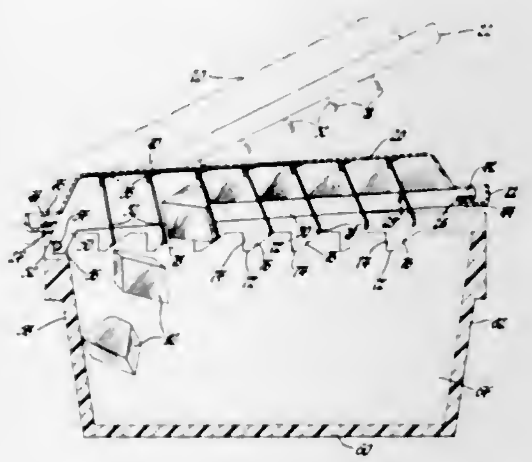

The inverted congealing container has tiltable partition walls with projecting ends extending into alignment with its rim. A receiving bin is located beneath and has pivotal interconnection with the inverted container. When the container is pressed down, the projecting ends of the partition walls are guided sequentially into camming engagement with the individual cam surfaces formed by the notches in the side walls of the bin to eject cubes from the container into the bin.

3,398,553
ICE MAKER INCLUDING IMPROVED SWEEP MEANS
Bruce B. Latter, Anchorage, and Charles J. Slayman, Louisville, Ky., assignors to General Electric Company, a corporation of New York
Filed Mar. 24, 1967, Ser. No. 625,738
4 Claims. (Cl. 62—353)

An ice maker of the type comprising ejecting means for raising an ice piece out of a mold cavity and sweep

means for sweeping the ice piece from the ejecting means includes flexible extension on the sweep means for as-

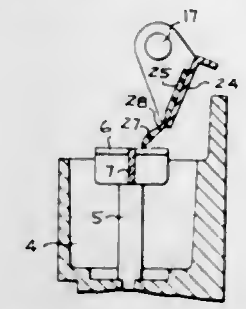

suring positive displacement of the ice piece from the mold surface.

3,398,554
STRAIGHT BAR KNITTING MACHINES
Ernest Start, Ruddington, and Raymond Blood, Shepshed, Loughborough, England, assignors to William Cotton Limited
Filed Nov. 8, 1965, Ser. No. 512,259
Claims priority, application Great Britain, Dec. 12, 1964, 50,690/64
5 Claims. (Cl. 66—89)

A straight bar knitting machine having needles and a narrowing head in which left and right groups of loop transfer points corresponding substantially to left and right halves of the row of needles are individually mounted in left and right mounting means. These mounting means are slidably displaceable in opposite directions by a programme controlled forward and backward racking mechanism. Cam operated means are provided for frictionally lowering and positively returning the points in the mountings relative to the narrowing head. The machine further includes loop doubling means comprising left and right butts on the left and right points respectively, left and right stop bars for the left and right butts respectively and a forward and backward racking mechanism for the stop bars, or, alternatively, electro-magnetic devices for the butts. Programme control means control the racking mechanism (or the electro-magnetic devices) for operation of the points in a progressively increasing or decreasing group arrangement.

3,398,555
DAMPING DEVICE FOR THE FRICTION BOX OF A KNITTING MACHINE
Prosper Dhondt, Wondelgem, Belgium, assignor to Fabrique National d'Armes de Guerre, Societe Anonyme, Herstal, near Liege, Belgium
Filed Oct. 21, 1965, Ser. No. 500,402
Claims priority, application Belgium, Sept. 14, 1965, 669,574
5 Claims. (Cl. 66—130)

A damping device for the friction box of a knitting machine, wherein the friction box carried by a friction rod is alternately braked and stopped by two angularly movable stops. The motion of these stops is imparted by a cam

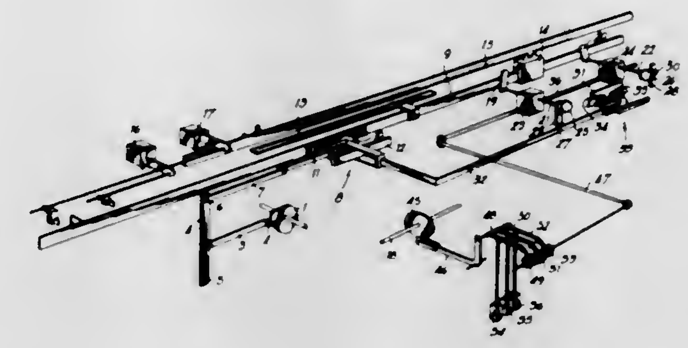

driven at the same speed and in the same direction as the friction rod.

3,398,556
JOURNAL CONNECTION FOR A WASHING MACHINE
Cyprien Jean Dupeux, Chatou, France, assignor to North American Philips Company, Inc., New York, N.Y., a corporation of Delaware
Filed Jan. 14, 1966, Ser. No. 520,793
Claims priority, application France, Jan. 15, 1965, 2,016
6 Claims. (Cl. 68—18)

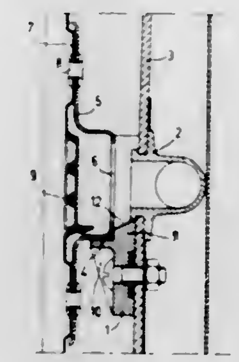

A fluid inlet connection for the rotating drum of a washing machine which permits the introduction of wash water through the journal into the drum. The journal is aligned with the central axis of the rotating drum and is supported on a bearing, the latter of which is fastened to the wash tub. The bearing engages less than half the surface of the journal thereby facilitating insertion and removal of the drum from the bearing. Water enters the drum via the aperture in the journal, is centrifuged by the drum rotation and is evacuated by passing through the porous drum walls.

3,398,557
LEATHER SOFTENING MACHINE
Jiří Dokoupil, Václav Opluštil, Jiří Zdráhal, and Jiří Zubik, Krnov, Czechoslovakia, assignors to Strojosvit Narodni Podnik, Krnov, Czechoslovakia
Filed Apr. 5, 1967, Ser. No. 628,752
Claims priority, application Czechoslovakia, June 13, 1966, 3,971/66
5 Claims. (Cl. 69—33)

A machine for softening leather in which the leather is passed horizontally between teeth mounted on upper and lower carriers, the lower carrier being vertically oscillated so that its teeth alternatingly project through a perforated work table and are rejected whereas the teeth of the upper

carrier are normally stationary. A resilient pad between the upper teeth facilitates release of the leather from the

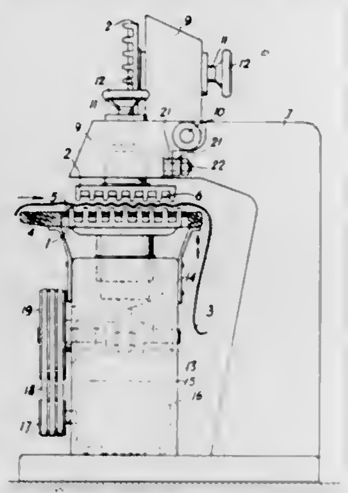

teeth and permits passage of the leather through the machine without damage.

3,398,558
FINGERPRINT CONTROL SYSTEM
Salvatore Benenati, 1603 Givan Ave., Bronx, N.Y. 10469
Filed Oct. 22, 1965, Ser. No. 502,036
13 Claims. (Cl. 70—277)

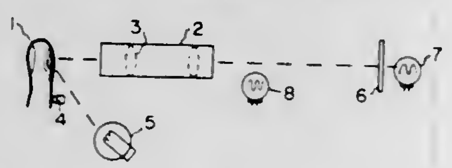

A control system for operating a door lock in response to a predetermined fingerprint pattern comprises means for projecting a light image of a person's finger onto one surface of a reference mask containing a master fingerprint pattern composed of opaque and transparent portions. A photosensitive device is positioned on the other side of the mask and responds to a light null, produced by correspondence of the light image and the master pattern, to actuate a control mechanism that unlocks the door. In order to make the system tamper-proof, a second photo-sensitive device is arranged to receive a portion of the light image before it reaches the mask. The second photosensitive device inhibits the operation of the lock unless it receives a given minimum quantity of light.

3,398,559
CONTROL OF PRESTRESSED ROLLING MILLS
John André Tracy, Talbot Woods, England, assignor to The Loewy Engineering Company Limited, Bournemouth, England, a company of Great Britain
Filed Sept. 15, 1964, Ser. No. 396,760
14 Claims. (Cl. 72—8)

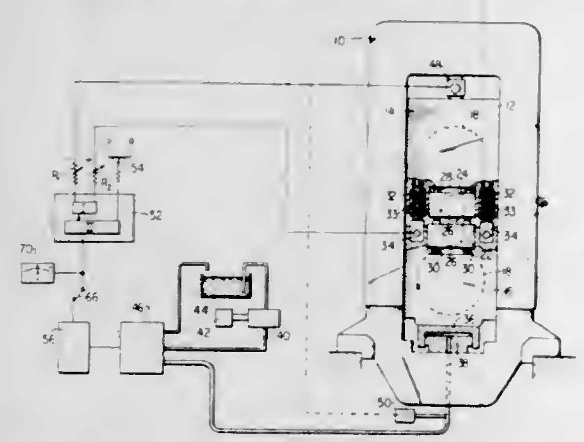

A method and apparatus for controlling the operation of a prestressed rolling mill by continuously controlling the prestressing force so that the opening between the working rolls is maintained at its desired distance irrespective of any changes in the roll separating force during rolling signals representing the prestressing force and the load in the spacing means are continuously measured and are multiplied by a factor which includes the coefficients of chock spring and roll spring so as to eliminate the effect of this elasticity upon the roll opening.

3,398,560
CONTROL MECHANISM
Michael B. Bunson, McKeesport, and Thomas W. Wilson, Franklin Township, Westmoreland County, Pa., assignors to United States Steel Corporation, a corporation of Delaware
Filed Apr. 5, 1966, Ser. No. 540,340
10 Claims. (Cl. 72—12)

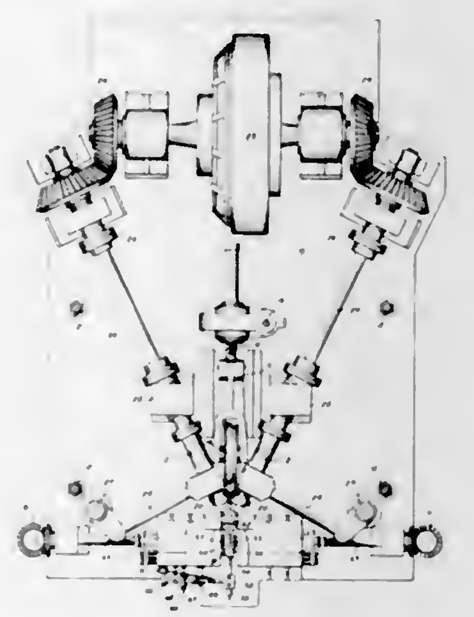

1. In a wheel-rolling mill which includes means for mounting a wheel blank, opposed web rolls and opposed rim rolls engageable with the blank, and drive means operatively connected with said rolls for advancing them with respect to the blank and thereby reducing its thickness while expanding its diameter, the combination therewith of a control mechanism comprising an electrically conductive probe adapted to abut the blank when it expands to a predetermined diameter, means supporting said probe on said mill, means electrically insulating said probe from said mill, an electronic circuit connected to said probe and actuated by contact of said probe with the blank, and means connecting said circuit with said drive means for reversing the drive means and retracting said rolls when said circuit is actuated.

3,398,561
APPARATUS FOR FORMING MATERIAL
Louis Zernow, Glendora, and Joseph Edberg, Covina, Calif., assignors to Aerojet-General Corporation, Azusa, Calif., a corporation of Ohio
Original application Sept. 18, 1961, Ser. No. 138,959, now Patent No. 3,228,221, dated Jan. 11, 1966. Divided and this application Nov. 1, 1965, Ser. No. 535,615
6 Claims. (Cl. 72—56)

1. An apparatus for forming an elongated impression in material having any desired shape, comprising in combination a container for holding a shock wave transmitting medium, wires mounted in the container and adapted to be connected to an electric power source, said electric power source having sufficient magnitude to explode the wires and form a shock wave in said shock wave transmitting medium wherein the formed shock wave has a shape generally similar to the shape of the wires, a female die, said wires having a configuration generally

similar to the shape of the female die and positioned so that the shock wave formed from the exploded wires is generally parallel to the die, and means for holding the material to be formed in the container in such a position

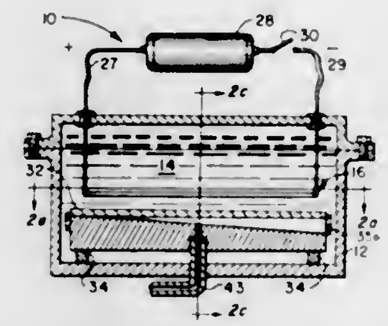

with respect to the wires so that when the electric power source is connected across the wires and explodes them, the resulting shock wave impacts on the material to be formed and forces it into the die.

3,398,562
APPARATUS FOR FORMING, HARDENING AND APPLYING LAYERS OF MALLEABLE MATERIAL UPON PLANAR AND PROFILED SURFACES
Václav Adam, Semily, Czechoslovakia, assignor to Vyzkumny a zkusebni letecky ustav, Letnany u Prahy, Czechoslovakia
Filed Oct. 24, 1963, Ser. No. 318,633
Claims priority, application Czechoslovakia, Nov. 9, 1962, 6,330/62
4 Claims. (Cl. 72—215)

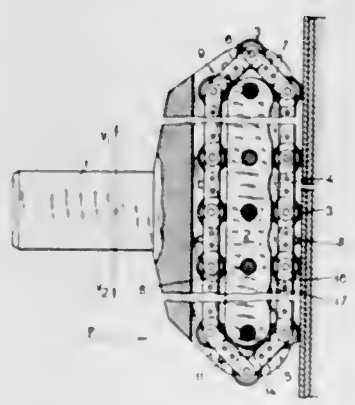

1. A device for forming, hardening and applying of layers upon planar and profiled surfaces comprising a body adapted to be fixed in a non-rotatable manner upon a part of a machine capable to perform a return movement, a cam fixed on said body, said cam provided with projections and depressions facing the surface to be processed, an endless chain adapted to be moved along said cam, a number of rolling bodies, said endless chain provided with inserts and take-along means forming a cage taking along said rolling bodies.

3,398,563
ROLL APPARATUS
John P. Jones and George D. McGoogan, Youngstown, Ohio, assignors, by mesne assignments, to Wean Industries, Inc., Warren, Ohio, a corporation of Ohio
Filed Feb. 14, 1966, Ser. No. 527,349
6 Claims. (Cl. 72—221)

An assembly wherein a shaft is rotatably carried by a support and projects therebeyond and such shaft removably supports roll means having axially spaced portions adapted to be subjected to different magnitudes of radial force. The normal position of the roll means on the shaft is with the roll means portion subject to the greatest radial force disposed closer to the support than the other roll means portion, means being provided to prevent acci-

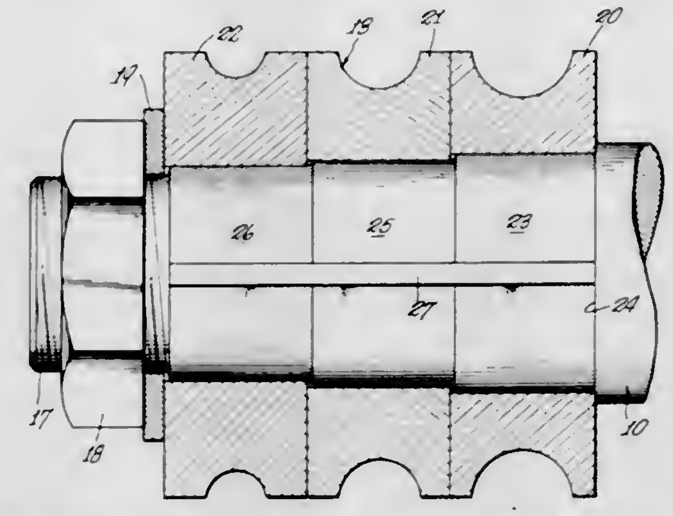

dental alteration of the normal positions of the roll means on the shaft.

3,398,564
ARRANGEMENT FOR COUNTER-BALANCING THE WORKING ROLLERS OF A ROLLER STAND
Ernst Heinrich Barten, Buschhutten, Germany, assignor to Achenbach Sohne G.m.b.H., Buschhutten, Germany
Filed July 23, 1964, Ser. No. 384,691
Claims priority, application Germany, July 29, 1963, A 43,699
2 Claims. (Cl. 72—243)

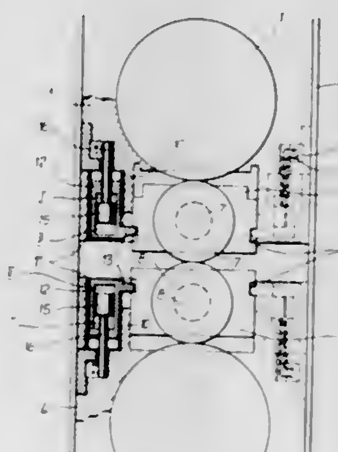

The present invention concerns a roller stand comprising two working rollers and two backing rollers therefor. Two pairs of bearing blocks for the working rollers are respectively slidably supported by two supporting means for the backing rollers. The arrangement furthermore comprises two pairs of double acting fluid operable cylinder piston means respectively operatively connected to said two pairs of bearing blocks and operable respectively to positively adjust said pairs of bearing blocks independently of each other toward and away from each other while each of said double acting cylinder piston means comprises a single cylinder only which is movable in opposite directions with regard to the respective adjacent supporting means and also comprises a single double acting piston stationarily arranged with regard to the respective adjacent supporting means and extending into the cylinder pertaining thereto.

3,398,565
HYDRAULIC PULLING DEVICE
Walter D. Whitney, 1044 San Remo Way, San Carlos, Calif. 94070
Filed Nov. 10, 1966, Ser. No. 593,543
5 Claims. (Cl. 72—453)

Pulling apparatus for applying heavy pulling loads to portions of a vehicle body in connection with repair op-

erations on the same. The apparatus is actuated by a hydraulic cylinder and is swingably mounted to permit application of forces at various angles. The hydraulic cyl-

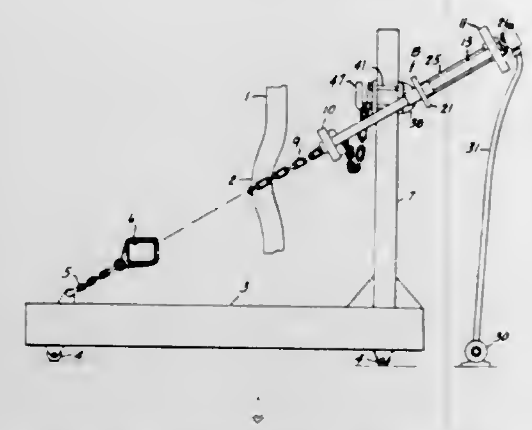

inder is positioned substantially outside of the frame of the apparatus to afford optimum movement of the pulling element.

3,398,566
GUIDE MEANS
Joseph Lee Garvey, P.O. Box 1270, Warren, Ohio 44482
Filed Jan. 24, 1966, Ser. No. 522,678
7 Claims. (Cl. 72—250)

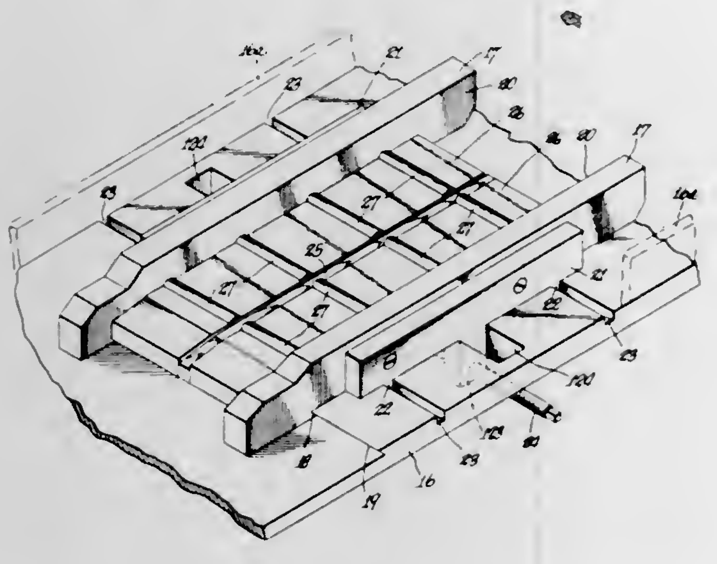

A guide for guiding a steel strip to the pass of a set of rolls, including a pair of edge guides for engaging opposite edges of the strip, and a selected number of blocks disposed and clamped between the edge guides to provide a surface engaging a flat side of the strip, each block having one or more rollers operable to protect the block surface from at least some frictional engagement with the strip.

3,398,567
TERMINAL CRIMPING MACHINE STROKE ADJUSTMENT
Billy E. Olsson, New Cumberland, Pa., assignor to Vaco Products Company, a corporation of Illinois
Filed Aug. 22, 1966, Ser. No. 574,144
10 Claims. (Cl. 72—400)

1. In a crimping machine for attaching a terminal to an electrical conductor, a reciprocable plunger carrying a work head, punch means mounted in said head for endwise shiftable adjustment in the direction of plunger movement, control means mounted in said head to determine the position of the punch means, and spring means mounted in said head to load said punch means transversely of said direction normally to retain said punch means in the position determined by said control means

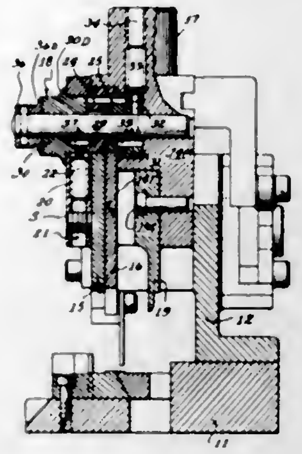

while accommodating endwise withdrawal and replacement of the punch means.

3,398,568
TERMINAL CRIMPING MACHINE PITCH ADJUSTMENT
Billy E. Olsson, New Cumberland, Pa., assignor to Vaco Products Company, a corporation of Illinois
Filed July 22, 1966, Ser. No. 567,240
7 Claims. (Cl. 72—421)

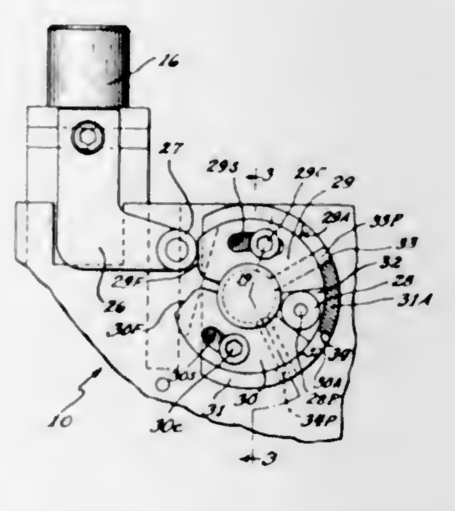

1. In feeding mechanism for advancing a strip terminal array in predetermined steps, said mechanism including means for moving an impact cam to and fro along a predetermined travel path, a shaft mounting a pawl to engage the strip terminal array and pitch determining means responsive to the to and fro movement of the impact cam and rotatably drivingly engaged to said shaft, the improvement wherein said pitch determining means comprises spacer means of predetermined size and a pair of cam blocks flanking said spacer means in oppositely abutting relation thereto and presenting free cam faces spaced apart to alternately assume oppositely confronting relation to the impact cam during to and fro movement thereof.

3,398,569
SIMULATOR
David B. Pollock, Huntington Beach, and Irvin H. Swift, Rolling Hills Estates, Calif., assignors to North American Rockwell Corporation, a corporation of Delaware
Filed Jan. 6, 1966, Ser. No. 519,108
13 Claims. (Cl. 73—1)

A cryogenic simulator for calibration and test of infrared radiometers comprises a thermally insulated shell cooled with liquid nitrogen. A diffuse reflecting surface

is mounted at one end of the simulator and at the opposite end two sources of radiant energy provide controlled flux of infra-red radiation. One of the sources simulates a target that emits infra-red radiation and a chopper intermittently interrupts radiant energy therefrom. The other

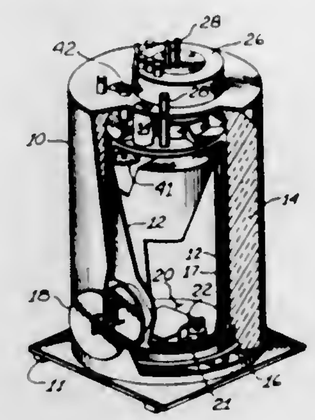

radiation source simulates background flux of infra-red radiation. The background radiation source illuminates the entire diffuse reflecting surface and in a preferred embodiment that target source is imaged on the diffuse reflecting surface for illuminating a relatively small area thereof.

3,398,570
PRESSURE GAUGE FIELD TESTING METHOD AND APPARATUS
Richard T. Cowan, Jr., Rte. 2, Box 27, Talahi Isle 31404, and Richard T. Cowan, Sr., 323 E. 50th St. 31405, both of Savannah, Ga.
Filed Jan. 17, 1966, Ser. No. 520,979
6 Claims. (Cl. 73—4)

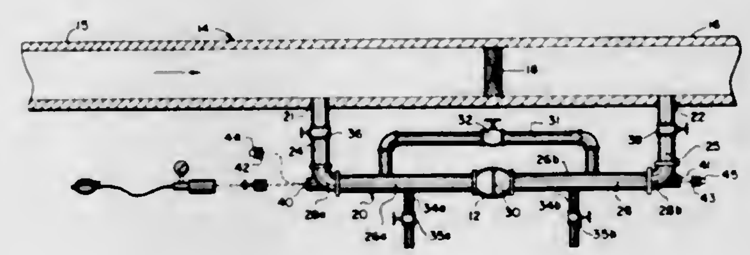

A pressure gauge testing method and apparatus utilized in the field to calibrate pressure gauges attached to flow lines at remote positions. The method comprises isolating a pressure gauge from its flow line without removing it from the flow line, exposing both sides of the pressure sensitive element of the gauge to the atmosphere, increasing the air pressure on one side of the pressure sensitive element, and comparing the gauge reading with a previously calibrated gauge. The apparatus comprises a U-shaped conduit having the ends of its legs in communication with a flow line on opposite sides of a constriction in the flow line, a pressure gauge in the conduit, valves for isolating the conduit from the flow line and opening the conduit to the atmosphere, and a precalibrated pressure gauge and collapsible air bulb connectable to the conduit.

3,398,571
EXPLOSIVE OPENING OF METAL DIAPHRAGMS
Rayner A. Montgomery, Silver Spring, Earl E. Kilmer, College Park, and John H. Abell, Bowie, Md., assignors to the United States of America as represented by the Secretary of the Navy
Filed Nov. 26, 1965, Ser. No. 510,456
6 Claims. (Cl. 73—12)

A ballistics range shock tube having an explosive rupturable metal diaphragm holding the high pressure section of the shock tube closed until an aerodynamic model is fired into the ballistics range section of the shock tube, whereupon a sensing and timing device initiates the

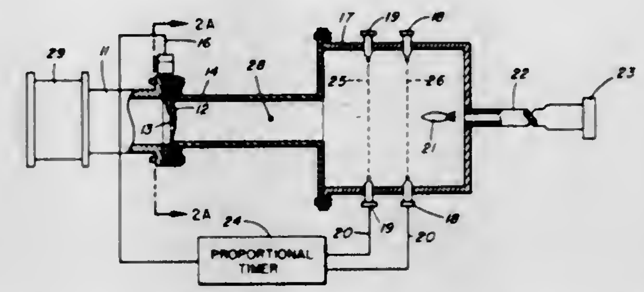

rupture of the diaphragm causing a high pressure shock wave to travel toward the model creating interaction effects between the model and the high speed shock wave air flow.

3,398,572
TRANSDUCER FOR MEASUREMENT OF TRANSIENT VELOCITIES
Keith O. Johnson and Dan L. Robinson, Idaho Falls, Idaho, assignors to the United States of America as represented by the United States Atomic Energy Commission
Filed Feb. 20, 1967, Ser. No. 618,283
3 Claims. (Cl. 73—12)

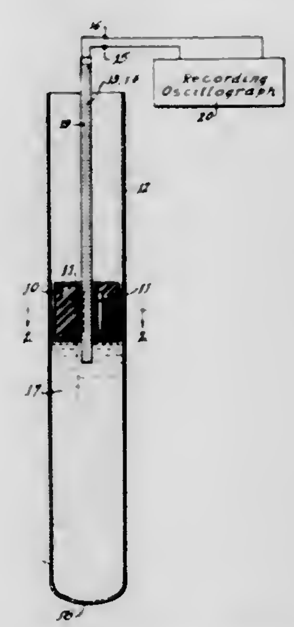

An apparatus for measuring rapid transient velocities of liquids in a restricted passage from rest consisting of a float having permanent magnets embedded in it, which is slidably mounted on a rod wound with a series of coils of opposite polarity so that rapid movement of the liquid will cause corresponding movement of the float containing the magnets along the rod, the magnets inducing an alternating electrical current in the coils, the frequency of the current is directly proportional to the transient velocity of the liquid.

3,398,573
APPARATUS FOR TESTING TUBULAR OR HOLLOW ARTICLES, PARTICULARLY THERMOPLASTIC PIPES, DESIGNED TO WITHSTAND INTERNAL PRESSURE
Peter Frederick Victor Lloyd, London, England, assignor to Durapipe & Fittings Limited, London, England, a British company
Filed Aug. 26, 1966, Ser. No. 575,457
Claims priority, application Great Britain, Aug. 27, 1965, 36,973/65
5 Claims. (Cl. 73—49.5)

An apparatus for testing tubular or hollow articles includes a means to apply pressure to several test articles,

means to individually indicate failure of the test articles, and automatic cutoff valves for each test article. Each

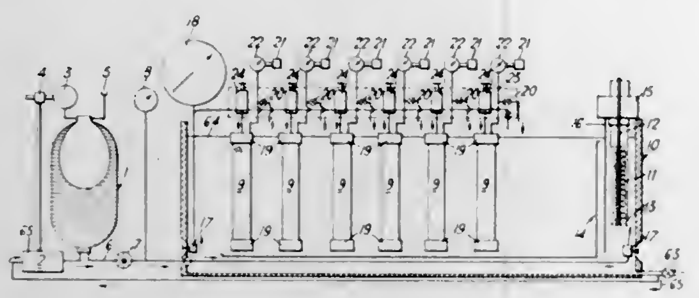

cutoff valve also includes means to selectively shut off the supply of pressure to the particular test article.

3,398,574
CLOSURE CAP INSPECTING APPARATUS
William J. Bloomer, Toledo, Ohio, assignor to Owens-Illinois, Inc., a corporation of Ohio
Filed Feb. 20, 1967, Ser. No. 617,237
10 Claims. (Cl. 73—52)

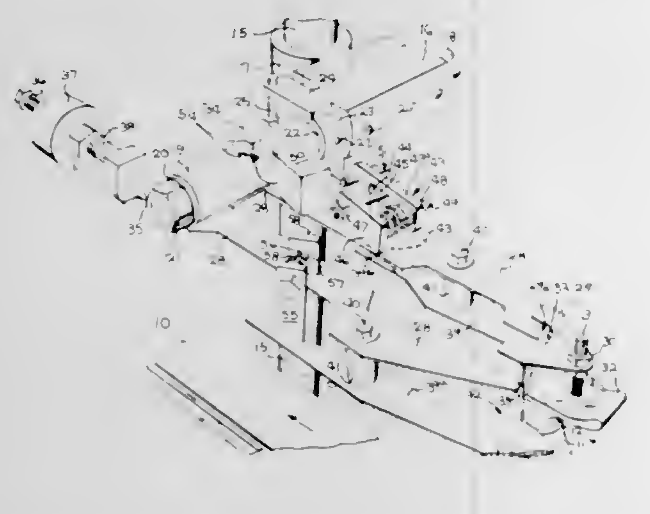

An apparatus for detecting and indicating the absence of a gasket liner element in a closure cap that is assembled onto a bottle in closing its contents. The apparatus employs a movable sensing arm to determine elevation location of the cap bottom with respect to a transfer bead on the neck of the glass bottle, as the bottle is moved upright on a horizontal conveyor. The movable sensing arm is in a position for engagement with both the lower end of a cap and the bead if an ungasketed cap is on the bottle, by reason of its being telescoped on the bottle to a lower level than a gasketed cap. This engagement of the arm with the cap and bead moves the latter to activate a switch for operating a cap marking device, and illuminating a signal lamp or like device, either or both of which signify the assembly as a "dud."

3,398,575
HEAVY DUTY TENSION METER
Erwin J. Saxl, Harvard, Mass. 01451
Filed Jan. 3, 1966, Ser. No. 518,317
1 Claim. (Cl. 73—144)

A tension meter for measuring tension in standing or running cables. The meter has three rollers mounted on a base. The middle roller engages the cable on the side opposite that engaged by the other two rollers, and is movable transversely under cable tension. The middle roller is mounted on a pair of cantilever beams and the bending force on the beams, resulting from tension in the cable is measured by a mechanical detector or strain gauges mounted on the beams. The position of the middle roller with respect to the beams is adjustable to provide compensation for stiffness and thickness of cables of various sizes. One of the end rollers is mounted on a lever

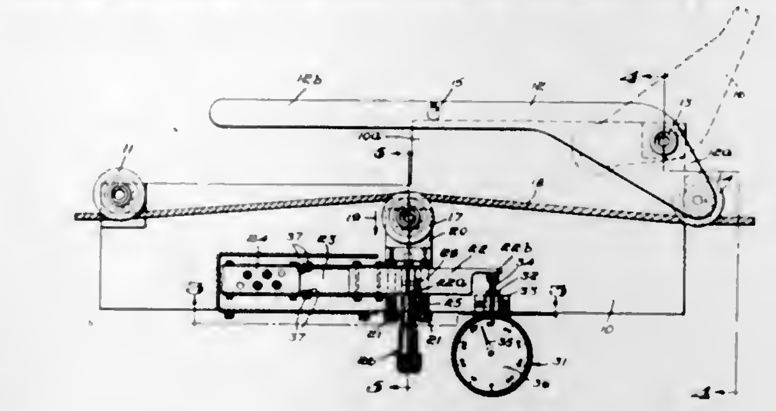

pivoted at one end of the plate. The lever can be manually swung to move the roller it carries in and out of operative position.

3,398,576
FLOW MEASURING DEVICE
Robert E. Cleary, 3224 Timmons Lane, Apt. 123, Houston, Tex. 77027
Filed Mar. 15, 1965, Ser. No. 439,867
3 Claims. (Cl. 73—205)

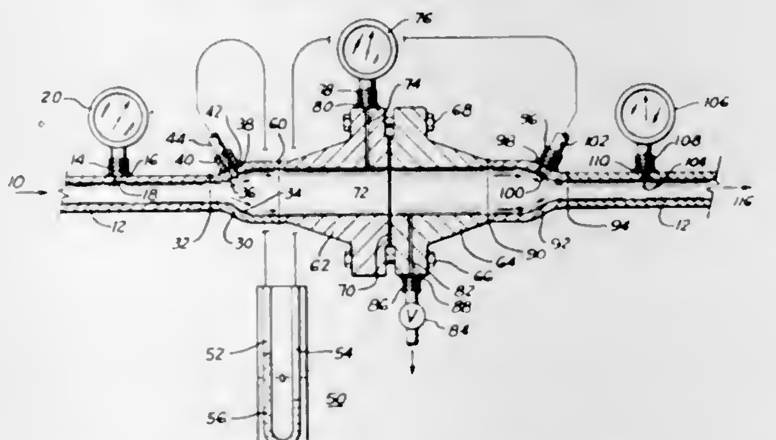

A device for measuring the flow of fluids in flow lines embodying means adapted to be inserted in the line to provide an elongated chamber therein of substantially larger diameter than the diameter of the line, and including means at each end of the chamber forming a generally conically shaped wall portion, flaring longitudinally inwardly of the chamber, whose internal surface is smoothly curved longitudinally to substantially reduce friction losses and eddying of the fluid which would otherwise result due to abrupt changes in diameter. The device also includes a fluid flow connection opening into the chamber through each of the curved end wall portions at a location mediate the ends thereof for connecting a pressure differential measuring device in communication with the chamber adjacent its opposite ends, by which the difference in pressure resulting from the flow of fluid through the chamber is measured.

3,398,577
MAGNETIC COUPLING DRIVE ASSEMBLY FOR FLUID FLOW METERS
Zoltan Kovats, Pittsburgh, David J. Gestler, Trafford, and Harry W. Fisher, Pittsburgh, Pa., assignors to Rockwell Manufacturing Company, Pittsburgh, Pa., a corporation of Pennsylvania
Filed Jan. 20, 1966, Ser. No. 521,775
31 Claims. (Cl. 73—231)

A magnetic coupling drive assembly for a fluid flow meter wherein a permanent drive magnet, which is mounted for rotation with the metering rotor, is magnetically coupled by a non-permanently magnetizable core structure to a permanent driven magnet which is fixed on

a register drive shaft extending transversely of the rotor rotational axis. The non-permanently magnetizable core structure is fixed against displacement in the meter housing and comprises at least one core piece extending between the drive and driven magnets and having pole

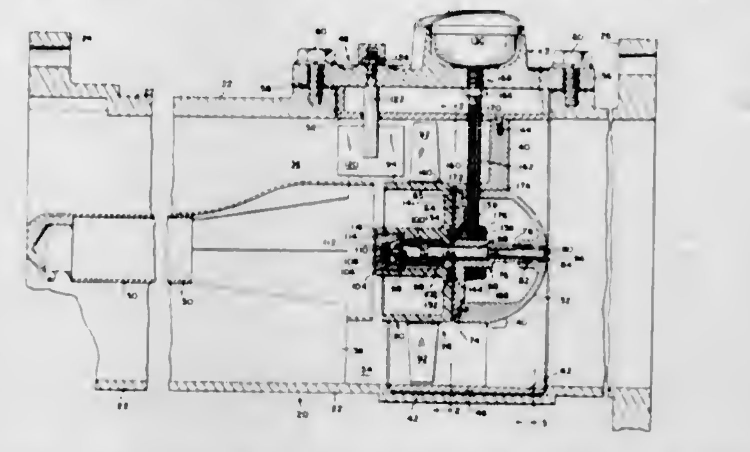

faces spaced from and magnetically coupled to the drive and driven magnets, whereby the register drive shaft is rotated in response to rotation of the metering rotor.

3,398,578
SELF-CALIBRATING LIQUID-LEVEL-MEASURING DEVICE
Bill E. Dozer, Richland, Wash., assignor to the United States of America as represented by the United States Atomic Energy Commission
Filed Jan. 24, 1966, Ser. No. 522,797
4 Claims. (Cl. 73—304)

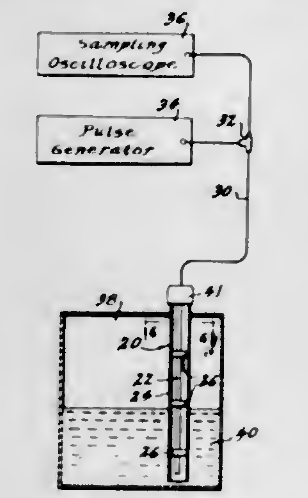

A liquid-level-measuring device has a pair of members coaxially mounted with respect to each other to form a hollow transmission line probe in contact with the liquid. A pulse generator applies a pulsed signal to the members and an oscilloscope measures signals reflected from the members. A plurality of insulators are spatially disposed with respect to each other along the length of the probe. Each of the insulators is shaped to surround the inner member and contact both the inner and outer members of the probe, while permitting flow therebetween of the liquid. A portion of the applied pulsed signal is reflected by each of the insulators to provide calibration marks for the probe.

3,398,579
CIRCUIT ARRANGEMENT FOR TEMPERATURE MEASUREMENT
Bohdan Carniol and Rudolf Stýblo, Prague, Czechoslovakia, assignors to Tesla, narodni podnik, Prague, Czechoslovakia
Filed June 17, 1965, Ser. No. 462,797
Claims priority, application Czechoslovakia, July 2, 1964, 3,837/64
3 Claims. (Cl. 73—342)

A temperature measuring circuit having two LC tuned circuits, one a reference tuned circuit and the other a measuring tuned circuit. A limitation diode connects each of the tuned circuits to a common DC bias source with respect to ground in order to maintain the peak values of shock-excited oscillations generated by the LC tuned

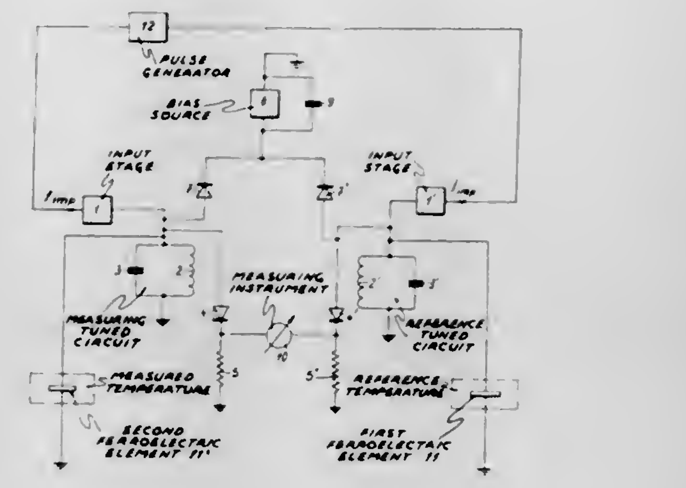

circuits equal so that measurements of the difference between the oscillations of the tuned circuits, made by a measuring instrument connected to the tuned circuits, are characterized by great accuracy.

3,398,580
THERMOCOUPLE TEMPERATURE MEASUREMENT
George E. Nyman, Poughkeepsie, N.Y., and Lewis K. Schultz, Shelburne, Vt., assignors to International Business Machines Corporation, Armonk, N.Y., a corporation of New York
Filed Oct. 22, 1965, Ser. No. 501,761
2 Claims. (Cl. 73—359)

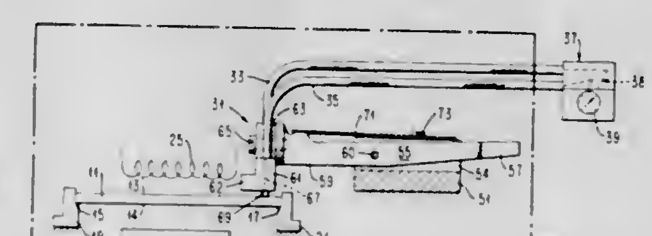

A thermocouple device for measuring the temperature of a flat conductive element, in which the measuring junction is formed by the element and two separated thermocouple leads. The separated leads are urged against the conductive element by a spring-biased lever arm. The thermocouple leads are connected to a constant temperature cold junction and an indicating device.

3,398,581
STABILIMETER
Clement A. De Lucia, 1 Walnut St., Jamestown, R.I. 02835
Filed Sept. 6, 1966, Ser. No. 577,349
10 Claims. (Cl. 73—379)

1. A stabilimeter comprising a rectangular housing having bottom, top, side, rear and front walls, a pair of spaced parallel lower rods extending horizontally from said front wall, said rods extending into said housing along said bottom wall and being fastened to said bottom wall, said front wall having a vertical slot above each of said rods, an upper rod extending horizontally from said housing through each of said slots in spaced parallel relation, means on said upper rods for supporting a subject for examination, means in said housing for sup-

porting said upper rods, said rod supporting means being responsive to movement of the subject, and means for

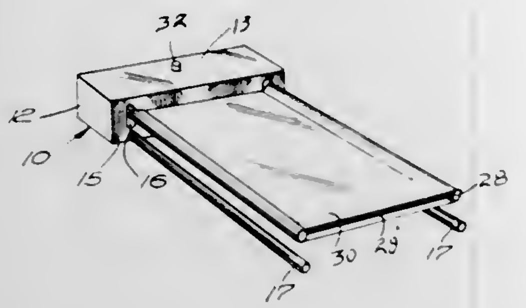

sensing and measuring the degree of response of said rod supporting means.

3,398,582
METHOD FOR MEASUREMENT OF VACUUM PRESSURE
Robert H. McFarland, Livermore, Calif., assignor to the United States of America as represented by the United States Atomic Energy Commission
Continuation-in-part of application Ser. No. 200,587, June 6, 1962. This application July 25, 1966, Ser. No. 569,555
6 Claims. (Cl. 73—398)

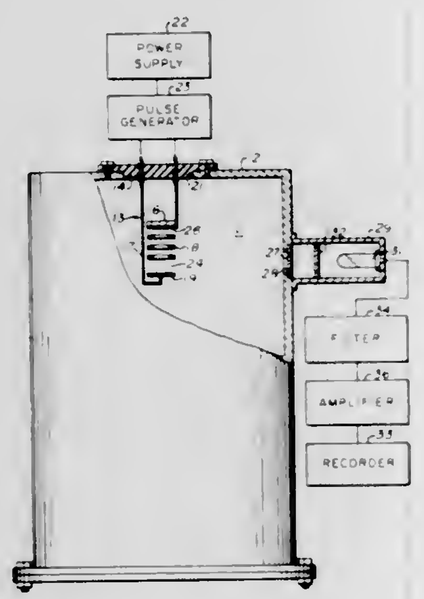

A pressure indicating system wherein the light quanta produced by electron-beam interaction with gas atoms in a high-vacuum environment is sensed by a photoelectric conversion device to produce an electrical output signal indicative of the gas atoms in said environment.

3,398,583
GAUGE DEVICE WITH EXPLOSION-PROOF CASE
Otto W. Heise, Newtown, and Andrew C. Lindmark, Bridgeport, Conn., assignors to Heise Bourdon Tube Company, Inc., Newtown, Conn.
Filed Feb. 25, 1966, Ser. No. 530,137
9 Claims. (Cl. 73—416)

A dial indicator gauge having a sturdy, explosion-proof unitary case incorporating integral side walls extending rearward from the edge of a rigid front wall whose central portion is substantially thickened inwardly to form a sturdy boss raised above the surrounding internal surface of the front face to provide rigid support for the gauge movement mechanism, and also providing precise coaxial alignment of a pointer spindle and a cooperating front dial overlying the front surface of the front wall. In one embodiment, the device is provided with convenient rear access for auxiliary indicating means

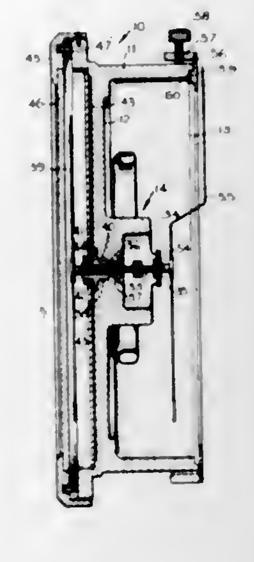

actuated by the pointer spindle such as a potentiometer or an auxiliary rear pointer and cooperating auxiliary rear dial.

3,398,584
BOURDON TUBE WITH A SMOOTH INTERNAL STRUCTURE
Otto W. Heise, % Heise Bourdon Tube Co., Inc., Newtown, Conn. 06470
Filed Feb. 3, 1966, Ser. No. 524,904
6 Claims. (Cl. 73—418)

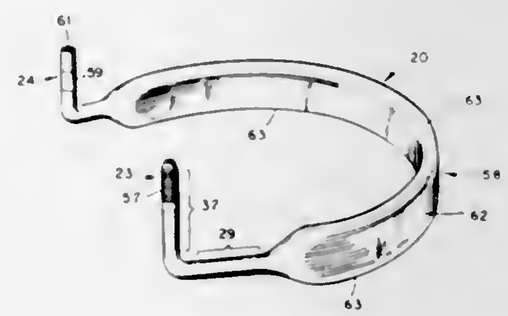

In a Bourdon tube pressure gauge of the Heise type, a completely smooth interior contour is provided so as to eliminate discontinuities which would otherwise cause turbulence and result in the deposit of solid contaminants, providing a smooth uniform internal surface extending from a vent end through a partially flattened, thin-walled deflecting portion with concentric cylindrical side walls into a relatively thick-walled outlet end.

3,398,585
CONTROL SYSTEM AND PARTS THEREFOR OR THE LIKE
Robert L. Golden, Greensburg, and Harvey J. Shopsky, Latrobe, Pa., assignors to Robertshaw Controls Company, Richmond, Va., a corporation of Delaware
Filed Feb. 10, 1966, Ser. No. 526,482
12 Claims. (Cl. 74—3.54)

This disclosure relates to a pneumatically controlled apparatus having a program member that is normally moved at a predetermined rate by a timer motor so as to sequentially interconnect and disconnect a pneumatic source to and from a plurality of pneumatically operated actuators to control the cycle of operation of the apparatus, the pneumatic control system including a pneumatically operated overriding actuator that will rapidly move the

program member at a rate faster than the rate of the timer motor when the overriding actuator is alternately actuated and deactuated. The overriding actuator means is interconnected to a valve means to move the valve means

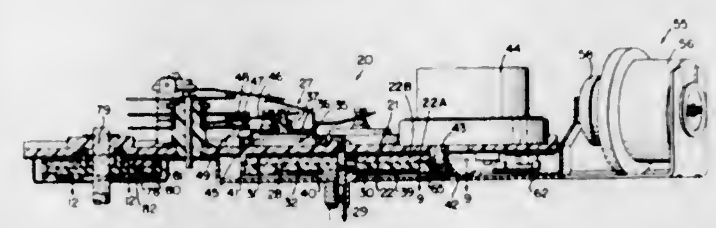

in such a manner that the movement of the valve means itself interconnects and disconnects the pneumatic source to and from the pneumatically operated overriding actuator means to cause the overriding movement thereof.

3,398,586
GYRO MONITOR MECHANIZATION
Robert E. Griffin, La Habra, and William Zimmerman, Anaheim, Calif., assignors to North American Rockwell Corporation
Filed June 7, 1965, Ser. No. 463,469
11 Claims. (Cl. 74—5.34)

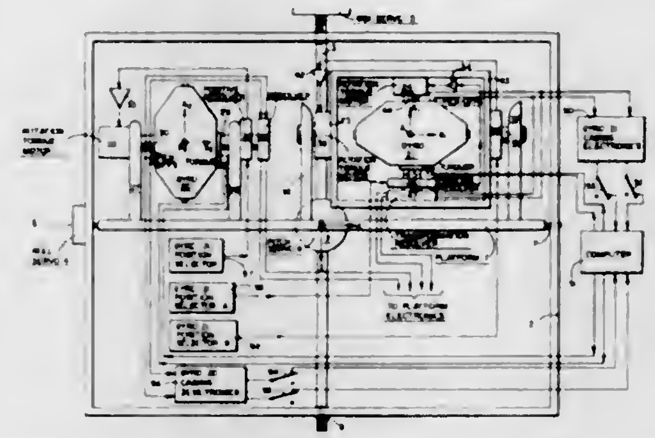

A method and means for monitoring the control axes of a platform stabilized by two two-axis gyroscopes in which the gyroscopes are oriented to control the platform using three of the four available sensing axes. The remaining sensing axis is aligned to the other sensing axes to monitor the operation thereof to determine the drift errors associated therewith. Both of the two-axis gyroscopes are provided with rotational mountings so that the drift rates about each of the platform controlling axes may be monitored and determined.

3,398,587
COMBINED HITCH AND POWER TRAIN COUPLING ASSEMBLY FOR TRACTORS
Frank M. Martin, Glen Ellyn, Ill., assignor to International Harvester Company, Chicago, Ill., a corporation of Delaware
Filed June 28, 1967, Ser. No. 649,650
10 Claims. (Cl. 74—15.63)

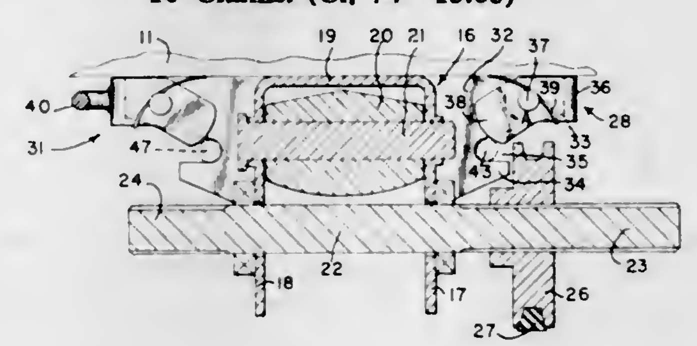

An assembly secured to the underside of a tractor and including a power take-off shaft adapted to be driven by a belt and pulley drive from the engine of the tractor. The PTO shaft has forwardly and rearwardly extending power-output ends. The assembly includes forwardly and rearwardly extending implement-receiving hitches disposed proximate to the respective power-output ends of the PTO shaft enabling implements to be coupled to the respective hitches coincident with coupling of the implements to the respective ends of the PTO shaft.

3,398,588
RECIPROCATING HAND TOOL ATTACHMENT FOR HAND-DRILLS
Emil S. Meier, Mountain View, Calif. (1573 Peacock Ave., Sunnyvale, Calif. 94086)
Filed Mar. 30, 1967, Ser. No. 626,995
10 Claims. (Cl. 74—50)

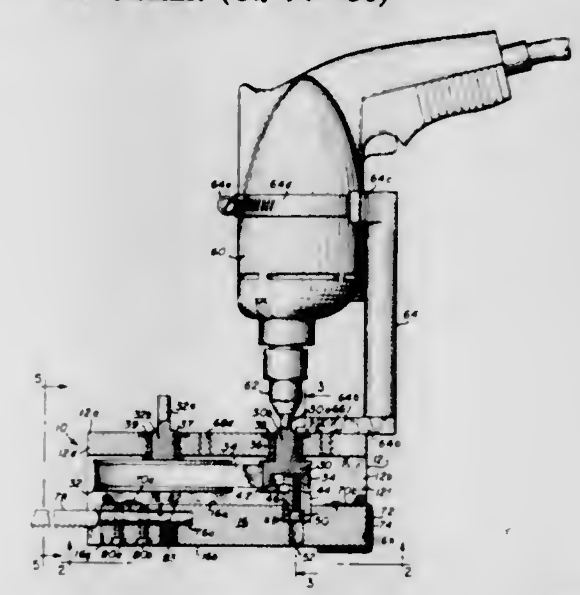

A hand-drill attachment for converting rotary motion into reciprocating motion in which a reciprocating slide member is actuated by an adjustable eccentric cam which is directly and positively coupled to one drive shaft engageable to the hand-drill shaft and indirectly and through a friction means coupled to another drive shaft engageable to the hand-drill shaft. The reciprocating slide member includes clip-on means for holding sandpaper and a fastening means for holding saw blades, hammers or the like. A handle means supports the hand-drill on the attachment and provides means for conveniently handling the combination.

3,398,589
RACK AND PINION FEEDING APPARATUS
John A. Huber, Birmingham, and Berlyn E. Baringer, Southfield, Mich., assignors to U.S. Industries, Inc., Detroit, Mich., a corporation of Delaware
Filed May 25, 1967, Ser. No. 641,201
8 Claims. (Cl. 74—77)

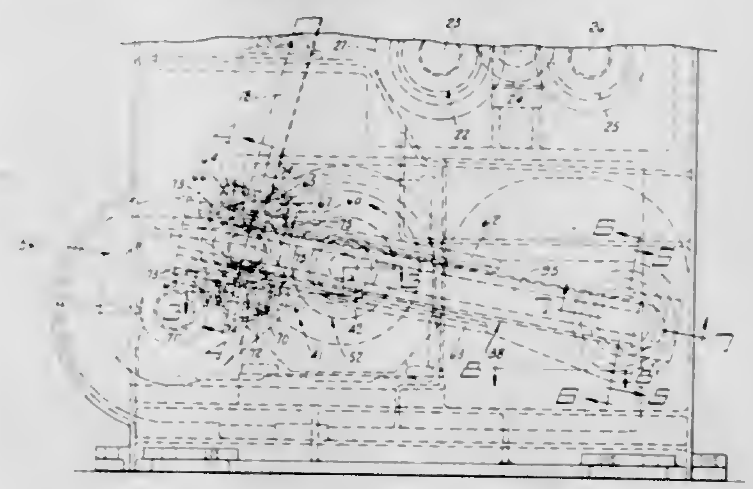

A rack and pinion apparatus for driving the feed rolls of a strip stock material feed machine in an intermittent or step-by-step fashion. The upper end of the rack drives

the pinion which is connected to the feed roll drive means. The lower end of the rack is pivotally connected to a throw arm which has the rear end pivotally anchored to the feeding machine. The front end of the throw arm is oscillated upwardly and downwardly by a crank head which is movably mounted on the throw arm and which is rotated by a power driven crank.

3,398,590
SIDE MOUNT OPERATOR FOR AWNING TYPE WINDOWS OR THE LIKE
Andrew J. Campbell, Southfield, and Bartley A. Haydu, Oak Park, Mich., assignors to Al-Craft Manufacturing Company, Troy, Mich., a corporation of Michigan
Filed May 31, 1966, Ser. No. 553,733
3 Claims. (Cl. 74—89.14)

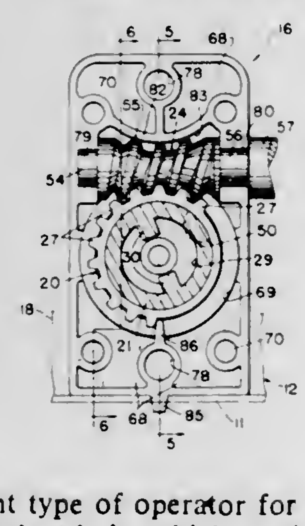

A side mount type of operator for awning or like type windows is disclosed, in which an improved worm and worm gear operating unit is housed in a die-cast casing of two-part construction; whose parts flatwise engage one another centrally of the width of the casing. The operator also features a two-part, die-cast worm gear of a double-enveloping nature, of which the interfitted parts meet at a plane including the axis of rotation of a steel worm. The worm is backed-up at its concave throat by a convex surface integral with the casing.

3,398,591
POSITIVE DETENTING RATCHET
Robert E. Arko, Mount Prospect, Ill., assignor to Teletype Corporation, Skokie, Ill., a corporation of Delaware
Filed Apr. 7, 1966, Ser. No. 540,920
8 Claims. (Cl. 74—142)

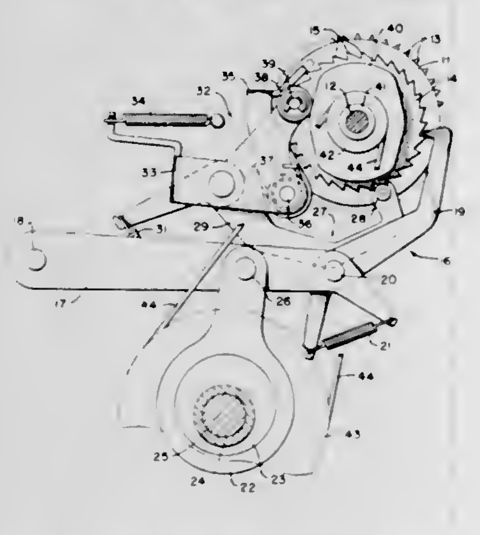

A device for assuring the correct detenting of a ratchet wheel including a pawl, a cam for constantly reciprocating the pawl and means for guiding the pawl in such a path that the pawl engages a tooth of the ratchet during its reciprocation if the ratchet is not properly detented and does not engage any tooth of the ratchet if the ratchet is properly detented.

3,398,592
ARRANGEMENT FOR THE CONTROL OF THE MOVEMENT OF BALLS
Jaroslav Braný, Prague, Czechoslovakia, assignor to Vyzkumny ustav strojirenske technologie a ekonomiky, Prague, Czechoslovakia
Filed Oct. 21, 1965, Ser. No. 499,802
Claims priority, application Czechoslovakia, Dec. 1, 1964, 6,701/64
10 Claims. (Cl. 74—198)

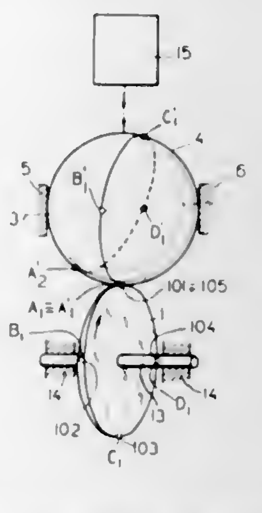

In an apparatus for inspecting bearing balls, the ball is engaged at least at four surface points by holding elements which include a driving roller and a control roller. The annular contact face of the latter about its axis of rotation is shaped so that the point of contact between the ball and roller is shifted back annd forth in a circular arc in a plane defined by the roller axis and the ball center whereby all surface points of the ball pass an inspection device when the ball is turned by the driving roller.

3,398,593
CHANGE-SPEED GEAR HAVING A TRAPEZOIDAL BELT
Emile Marie Ortmans, 52 Rue de Liege, Verviers, Belgium
Filed May 16, 1966, Ser. No. 550,421
Claims priority, application Belgium, May 25, 1965, 40,526
11 Claims. (Cl. 74—230.17)

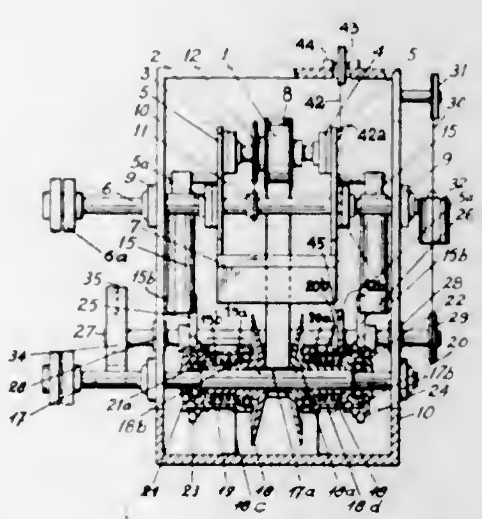

In a change-speed gear with an endless trapezoidal belt for driving a driven shaft according to a variable velocity of rotation and to a predetermined law there are provided a driving pulley having an inextensible groove mounted on a shaft carried on a rocking member and a driven pulley having an extensible groove on said driven shaft and whose conical plates are slidable by the action of a displacement means on which acts a driving means which comprises an auxiliary shaft carrying a pulley,

connected by a cable or a chain to said rocking member whose pivoting is limited by a limiting means according to the pivoting compelled by a control element.

3,398,594
SPLINE ANTIRATTLE DEVICE FOR COUNTERSHAFT TRANSMISSION
Robert C. Keller, Troy, Mich., assignor to General Motors Corporation, Detroit, Mich., a corporation of Delaware
Filed May 2, 1967, Ser. No. 635,485
8 Claims. (Cl. 74—333)

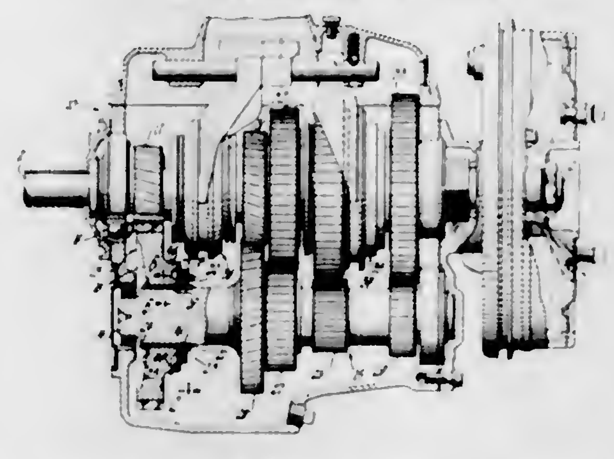

An antirattle device for use with a countershaft transmission comprising an outer hub secured to a head gear, an inner hub in splined engagement with a countershaft and a resilient vibration damping member bonded to the outer and inner hubs is disclosed. The resilient member effectively dampens torsional vibrations imposed by an engine on the head gear when the countershaft is being rotated under a no load condition by the head gear. The resilient member has sufficient yieldability to permit deflection, well within its elastic limit, so that splines on the head gear engage the countershaft when a driving torque is transmitted via the head gear and countershaft.

3,398,595
SADDLE FEED MECHANISM AND METHOD OF OPERATION
Carl E. Clutter, Mason, Ohio, assignor to Jack N. Binns, Cincinnati, Ohio
Filed July 21, 1966, Ser. No. 566,982
11 Claims. (Cl. 74—409)

An antibacklash saddle movable along a bed in parallelism with an elongated toothed rack fixed thereto is provided with two spaced parallel shafts carrying pinions meshing with said rack. The saddle is further provided with a main shaft journalled thereupon for rotational and longitudinal shifting movements and which carries a right hand helical toothed drive gear, and a left hand helical toothed drive gear. Companion gears mounted upon the saddle for rotation in fixed planes mesh respectively with the helical toothed drive gears. The tooth angularity of the helical gears are such that longitudinal shifting without rotation of the main shaft imparts rotation of the companion gears. There is direct connection between a companion gear and its respective rack pinion to transmit thereto the rotation of the companion gear.

3,398,596
GAIN POWER TRANSMITTING DEVICE
Paul T. Jahnke, 155 W. 75th St., Apt. 2, New York, N.Y. 10023
Filed Apr. 20, 1967, Ser. No. 632,304
8 Claims. (Cl. 74—413)

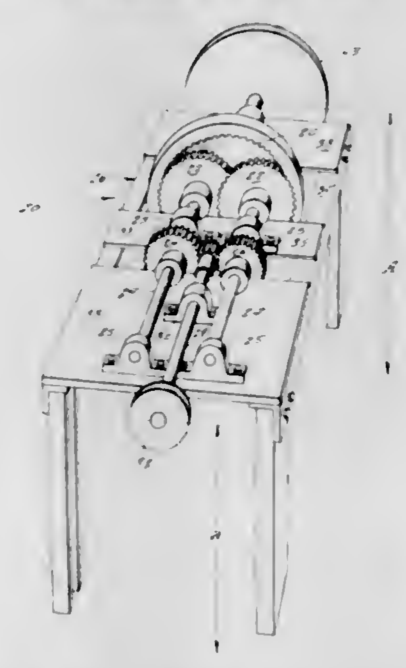

A transmission assembly for transmitting power, including a gear train that is driven by an input shaft from a power source, the gear train driving a simple gear system connected to an output shaft, and wherein the output shaft attains a speed change relative to the input shaft.

3,398,597
SPEED REDUCER
Jackson Chung, Mishawaka, Ind., assignor to The Reliance Electric and Engineering Company, a corporation of Ohio
Filed Oct. 20, 1966, Ser. No. 588,125
10 Claims. (Cl. 74—421)

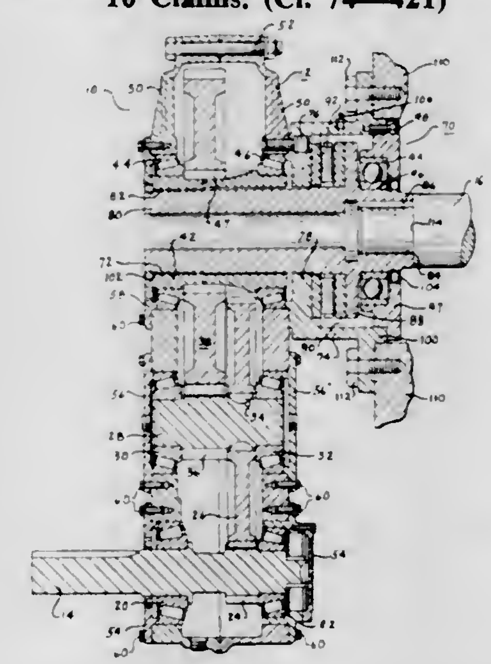

A speed reducer mechanism which supports and drives a driven shaft and which contains both thrust and radial

bearings to support the driven shaft against axial and radial forces. The input and output shafts are connected by a plurality of reducing gears and the output shaft is connected directly to the supported driven shaft.

3,398,598
MOTION TRANSLATION DEVICE
Albert V. Gress, Jr., Dayton, Ohio, assignor to The Bendix Corporation, a corporation of Delaware
Filed Oct. 28, 1966, Ser. No. 590,296
4 Claims. (Cl. 74—424.8)

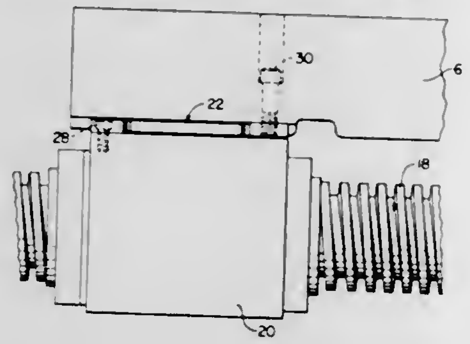

A motion translating device of the type used to provide a driving link between a driving member and a driven member. The motion translating device is rigid in the linear direction of movement and relatively flexible in all other directions thereby providing a positive driving connection only in the linear direction of movement.

3,398,599
PRECISION NUT FOR NUMERICAL CONTROL MACHINES
Walter P. Hill, Bloomfield Hills, Mich., assignor to Walter P. Hill Inc., Troy, Mich., a corporation of Michigan
Filed Mar. 3, 1967, Ser. No. 620,351
7 Claims. (Cl. 74—441)

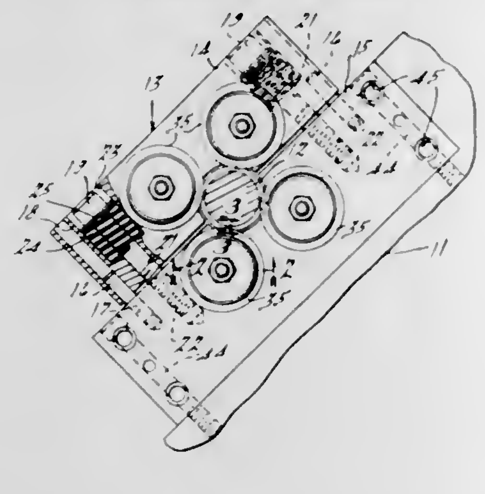

The disclosure pertains to a nut for a non-precision lead screw having discs at opposite ends of a plurality of rotatable shafts which extend within the groove of the lead screw thread and are permitted to move inwardly and outwardly thereof to follow the inaccuracy of the groove. The discs are retained in engagement with one, the other or both sides of the groove at all times and thereby prevents backlash and undesired movement relative to the lead screw.

3,398,600
MOTION TRANSMITTING REMOTE CONTROL ASSEMBLY
Daniel L. White, Birmingham, and Peter A. Stahr, Detroit, Mich., assignors to Teleflex, Incorporated, North Wales, Pa., a corporation of Delaware
Filed Oct. 10, 1966, Ser. No. 585,635
12 Claims. (Cl. 74—501)

A motion transmitting remote control assembly which is normally manually operated to control a device or control element by transmitting tension or compression in a curved path by means of a flexible motion transmitting

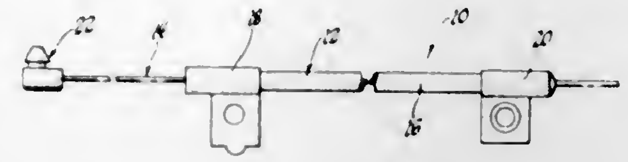

core element and, more specifically, to an improved snap-in male terminal means for the ends of such core elements.

3,398,601
STEERING WHEEL
Clifford G. Schroeder, 4685 Harris Road, Brecksville, Ohio 44141
Filed Apr. 4, 1966, Ser. No. 539,914
11 Claims. (Cl. 74—552)

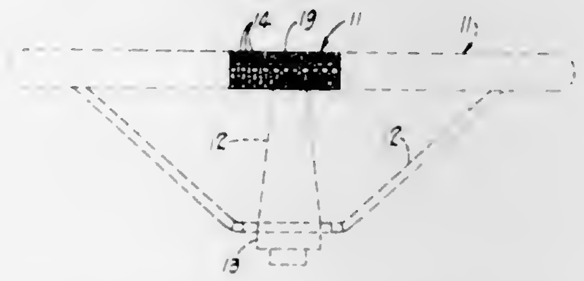

An automotive steering wheel having a rim portion formed of a hollow metal tube, the major portion being perforated substantially uniformly throughout to leave a network of remaining intersecting metal filaments extending both circumferentially of the wheel and circumferentially of the tube cross-section, the areas of the perforations and of the metal network in said major portion being such that the perforations constitute a substantial area contacted by the operator's hand to provide effective ventilation through the perforations and the bore of the tube, while maintaining a strong interweaving network of metal filament in tubular form to provide an effective and convenient rim to grasp, the inner peripheral portion of the rim being over-lapped unperforated metal to add strength to the rim.

3,398,602
TORSIONAL VIBRATION DAMPERS
Louis Paul Croset, 23 Gernhill Ave., Huddersfield, Yorkshire, England
Filed May 26, 1966, Ser. No. 553,139
Claims priority, application Great Britain, May 27, 1965, 22,490/65
10 Claims. (Cl. 74—574)

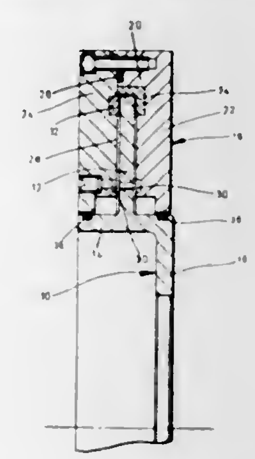

A torsional vibration damper in which a disc is fixedly attachable as a collar flange to a shaft. A cylindrical inertial casing is supported via bearings about the disc. Between the disc and the interior of the casing is a fluid film. The cylindrical casing has an annular cover which is removable to enable accurate machining of its interior. The contact between this cover and the rest of the casing is made fluid tight by a seal. The bearings are of hard, non-metallic material. They sit in recesses in the cylindrical casing and protrude a predetermined number of thousandths of an inch inwardly to fix the fluid gap between the disc and the casing interior.

3,398,603
TORQUE CONVERTER, CLUTCH, TRANSMISSION AND MOTOR CONTROLS
Imre Szodfridt, Ditzingen, and Otto Hausinger, Gerlingen, Germany, assignors to Firma Dr. Ing. h.c.F. Porsche K.G., Stuttgart-Zuffenhausen, Germany
Filed Oct. 20, 1966, Ser. No. 588,142
Claims priority, application Germany, Nov. 4, 1965, P 38,041
14 Claims. (Cl. 74—645)

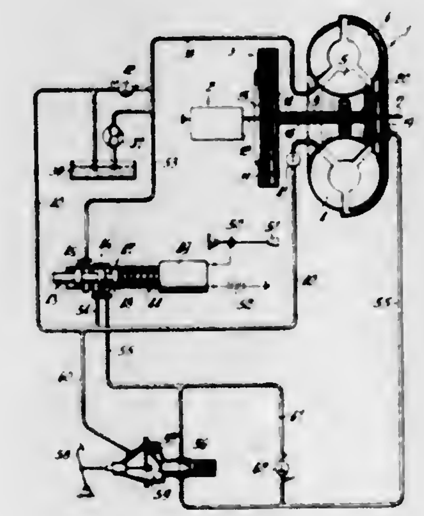

A compound transmission for automotive vehicles having a hydrodynamic torque converter, a multistage change speed gear transmission, and a clutch interposed between the converter and gear transmission that is actuated by the fluid pressure within the converter chamber under the control of the gear shift lever by a circuit having an electromagnetically controlled pilot valve for reducing the pressure on one side of the clutch actuator piston separate from the converter chamber.

3,398,604
POWER TRANSMISSION
Gilbert K. Hause, Bloomfield Hills, Mich., assignor to General Motors Corporation, Detroit, Mich., a corporation of Delaware
Filed Nov. 15, 1966, Ser. No. 594,451
5 Claims. (Cl. 74—688)

1. A transmission comprising in combination a torque converter having an input member, an output member and a reaction member, a drive shaft operatively connected to said output member, a driven shaft, epicyclic gearing means operatively connected between the shafts and having a plurality of reaction elements operative when held to establish a plurality of forward speed and torque ratios and at least one reverse speed ratio and transmitting a hydrodynamic torque component from said drive shaft to said driven shaft, means for selectively holding said reaction elements of the epicyclic gearing means from rotating for selectively establishing forward speed and torque ratios and at least one reverse speed ratio; means for operably connecting said reaction member to an element of said epicyclic gearing means for transmitting a hydrodynamic torque component from said reaction member to said epicyclic gear means and said driven shaft in addition to said torque component

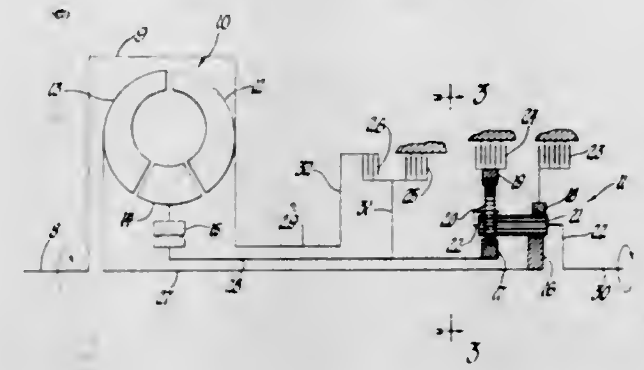

transmitted by the epicyclic gearing means from the drive shaft to the driven shaft during a forward and a reverse speed and torque ratio.

3,398,605
METHOD OF OPERATING A TRANSMISSION FOR TRACKLAYING VEHICLES
Richard Ainsworth, Huntington, and Wolfgang J. Stein, Milford, Conn., assignors to Avco Corporation, Stratford, Conn., a corporation of Delaware
Filed Oct. 18, 1966, Ser. No. 587,569
9 Claims. (Cl. 74—720.5)

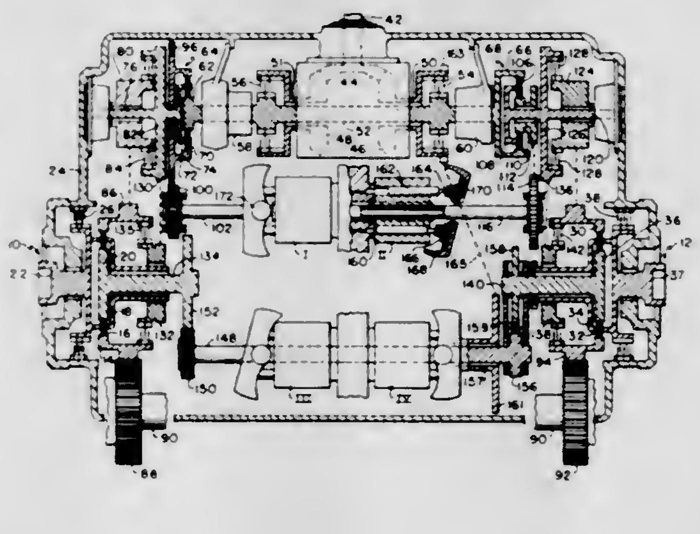

A transmission comprises two input power planetary gear sets for driving tracks of a tracklaying vehicle. Input power, supplied from a variable speed power source, such as a free power gas turbine, is connected to the tracks through the two planetary input gear sets by means of four gears, each of which provides a different drive ratio and is selectable by means of four clutches. Except during gear shifting operations, power is mechanically transmitted through one input planetary gear set and one selected gear. During gear shifting operations power is transferred from the one planetary gear set to the other by means of a hydraulic system consisting of two units operating alternately as a pump and a motor. The hydraulic system serves to selectively lock the reaction member of the one planetary gear set for 100% mechanical transmission and serves to variably control the reaction forces on the reaction member during the power transfer period. The system also includes two output planetary gear sets which are driven by the four selectable gears. For steering the vehicle, an additional hydraulic system, consisting of a pump and motor, is used for oppositely rotating the reaction members of the two output planetaries to change their relative speeds.

3,398,606
TRANSMISSION
Robert C. Utter, Indianapolis, Ind., assignor to General Motors Corporation, Detroit, Mich., a corporation of Delaware
Filed Dec. 30, 1965, Ser. No. 517,539
5 Claims. (Cl. 74—759)

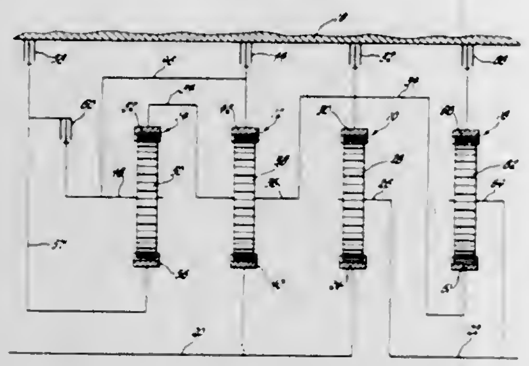

A multispeed compound planetary gear transmission having a direct drive clutch integrated into the compound planetary gearing so that the slip speed in the clutch is determined by the relative rotation between two members of a compounding gear set.

3,398,607
TRANSMISSION
Howard E. Chana, Flint, Mich., assignor to General Motors Corporation, Detroit, Mich., a corporation of Delaware
Filed Oct. 22, 1965, Ser. No. 501,038
16 Claims. (Cl. 74—864)

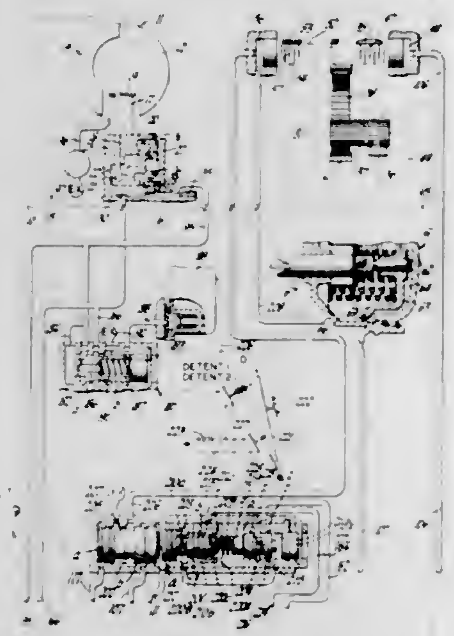

An automatic transmission control providing upshifting controlled by a bias increasing at one ratio in relation to increasing torque demand up to a predetermined torque demand and a bias increasing at another ratio in relation to increasing torque demand above this predetermined torque demand, through detent upshifting and downshifting at predetermined speeds, and closed throttle to detent throttle opening downshifting at a predetermined speed independent of torque demand.

3,398,608
AUTOMATIC MACHINE TOOL
Edwin A. Redmer, Clearwater, Fla., assignor to Redmer Air Devices, Inc., St. Petersburg, Fla., a corporation of Florida
Filed Dec. 20, 1965, Ser. No. 515,031
12 Claims. (Cl. 77—5)

A machine tool having vertical post means, and a machine tool attachment housing slidably mounted on the post means. A vertical draw rod is secured to the attachment housing, and means are provided for effecting vertical movement of the draw rod and the attachment housing relative to the post means. A work table is movable transversely of the attachment housing and has mounted thereon pneumatically operated fixtures with collets for holding work pieces. Cam operated switches are arranged for cyclical actuation for controlling valves in pneumatic circuits effective in the automatic operation of the machine tool.

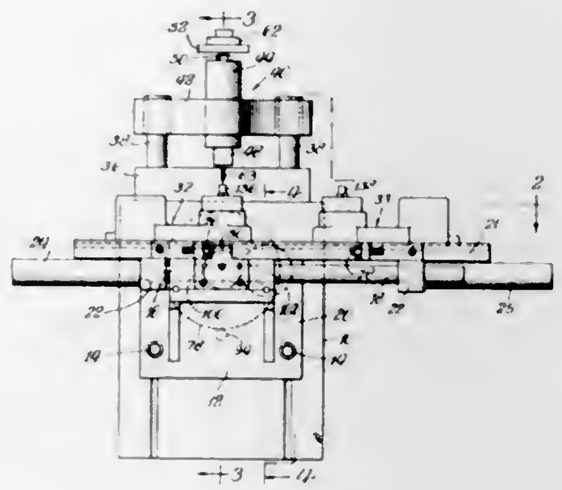

3,398,609
POWER TOOL
Donald E. Schott, Emerson, N.J., assignor to Thomas C. Wilson Inc., a corporation of New York
Filed Dec. 22, 1966, Ser. No. 603,919
9 Claims. (Cl. 77—7)

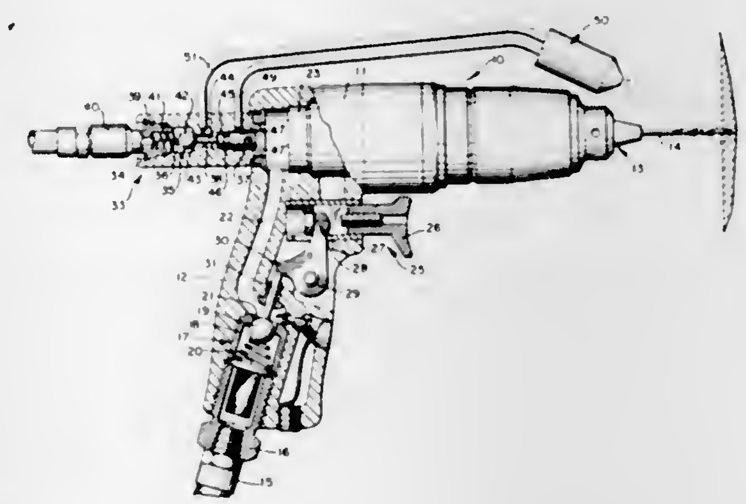

This disclosure relates to an improvement in power tools used for the performance of cutting actions in that it includes means in the power tool for spraying fluid or atomized fluid to the cutting area during the cutting action and to a nozzle assembly constructed to adjust the amount of fluid dispensed from the nozzle.

3,398,610
INSULATION END REMOVING TOOL
James J. Matthews, 14 Woodcrest Road, Hicksville, N.Y. 11801
Filed May 15, 1967, Ser. No. 638,233
3 Claims. (Cl. 81—9.5)

A manually operable device comprising a body having a bore adapted to surround an insulated cable. The body being provided with cutting means located so as to simultaneously cut and strip the insulation upon rotation of the body.

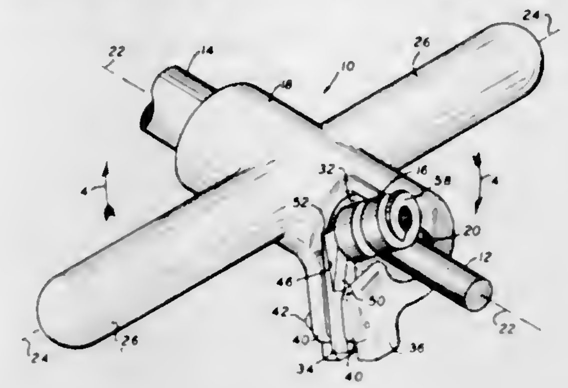

3,398,611
ELECTRIC HAND TOOL WITH OVERLOAD COUPLING
Reinhard Hahner, Stuttgart, Germany, assignor to Robert Bosch G.m.b.H., Stuttgart, Germany
Filed July 6, 1966, Ser. No. 563,272
Claims priority, application Germany, July 8, 1965, B 82,739
10 Claims. (Cl. 81—52.4)

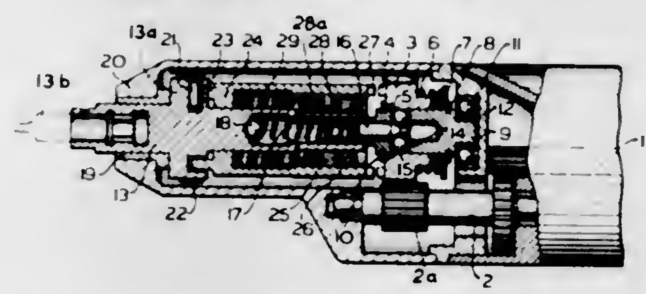

1. A hand tool comprising, in combination, a casing; a tool holder and a drive means mounted in said casing for rotation and axial movement; coupling means connecting said tool holder with said drive means and including an overload coupling, a drive coupling, and a rotary and axially movable coupling member connected with said couplings; an overload spring connecting said coupling member with said tool holder and urging said coupling member to a normal position in which said overload coupling is engaged; and a second spring for urging said tool holder and coupling member in said normal position to an inoperative position in which said drive coupling is disengaged, said tool holder, overload coupling, and coupling member from said normal position being moved by outer axial pressure to a working position in which said drive coupling is engaged and said tool holder is rotated by said drive means, while upon blocking of rotation of said tool holder, said overload coupling is momentarily disengaged and displaces said coupling member, said drive coupling, and said drive means in axial direction so that said drive means rotates said coupling member idly until said overload spring returns said coupling member to said normal position.

3,398,612
DRIVERS FOR SETTING FASTENERS
Ronald W. Batten, Torrance, Calif., assignor to Hi-Shear Corporation, Torrance, Calif., a corporation of California
Continuation-in-part of application Ser. No. 587,320, Oct. 17, 1966. This application Dec. 27, 1966, Ser. No. 613,698
3 Claims. (Cl. 81—54)

This invention relates to drivers for setting fasteners, such as threaded screws and nuts. A driver, according to the present invention, includes an overrunning clutch adapted to rotate a fastener-engaging tool member in one direction, thereby driving an engaged fastener in the one direction, and further adapted to be rotated in an opposite, or back-off direction, whereby the tool member is de-coupled from rotational movement with the clutch. The clutch is preferably an overrunning roller clutch. The driver may be backed off and driven with infinitely variable incremental movements.

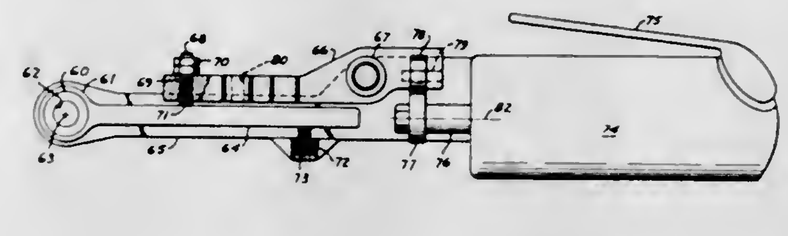

3,398,613
APPARATUS FOR REMOVING EXCESS WELDING MATERIAL FROM RAIL WELDS
Carlo Gallotti, Milan, Italy, assignor to Elektro-Thermit G.m.b.H., Essen, Germany, a corporation of limited liability of Germany
Filed Feb. 4, 1966, Ser. No. 525,030
7 Claims. (Cl. 83—3)

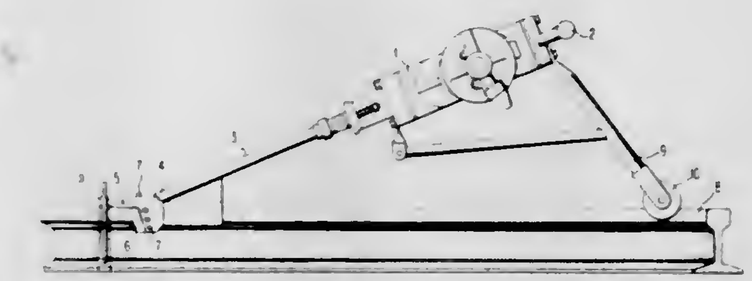

A downwardly facing channel-shaped guide slide is adapted to enclose a rail tread. Chisels are supported by the guide slide and have cutting edges which are mounted at an angle with respect to the excess welding material to be removed. A chisel shaft is connected at one end to the guide slide and extends upwardly therefrom at an angle thereto and has hammer means connected to the opposite end thereof. A support means is connected to the hammer means and extends downwardly therefrom. A guide means is carried by the lower end of the support means for movable engagement with a rail to guide movement of the apparatus along the upper surface of a rail tread.

3,398,614
METHOD OF AND APPARATUS FOR CUTTING JIGSAW PUZZLES
James S. Cleary, Swalecliffe, Kent, England, assignor to Toogood & Jones Limited, Whitstable, Kent, England, a British company
Filed Oct. 12, 1966, Ser. No. 586,215
Claims priority, application Great Britain, Oct. 14, 1965, 43,584/65
11 Claims. (Cl. 83—32)

5. A method of making a jigsaw puzzle which comprises cutting a sheet of material into strips with irregular, interlocking, edges using a cutting tool consisting of a blade curved about transverse axes to provide, like a letter S, two open-mouthed oppositely facing concave portions of which one, being longer than the other in the lengthwise direction of the blade, has a mouth wider than that of the other, one edge of the blade being sharpened to form a cutting edge, the tool being used in the cutting of

each strip to make a succession of connected cuts and the orientation of the tool for different cuts being varied by

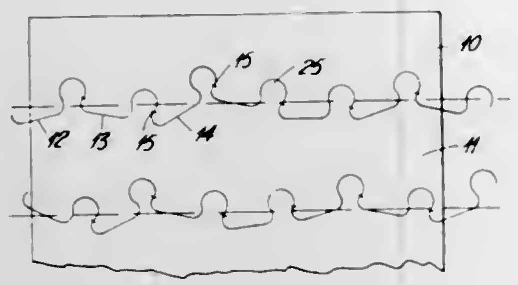

angular movement of the tool about one end, and cutting the strips transversely into individual puzzle pieces.

3,398,615
METHOD AND APPARATUS FOR CUTTING ANNULAR WORKPIECES
Paul J. Grabill, Livonia, Mich., assignor to Kelsey-Hayes Company, Romulus, Mich., a corporation of Delaware
Filed Oct. 20, 1965, Ser. No. 498,220
16 Claims. (Cl. 83—49)

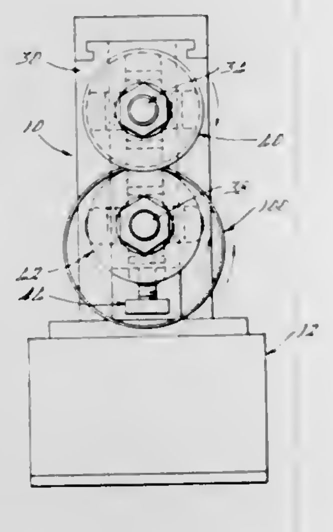

A method and apparatus for cutting annular workpieces to form wheel bodies. A pair of adjacently arranged rotary cutter assemblies with a plurality of circumferentially spaced cutter elements on each assembly are provided. The cutter elements on one of said assemblies are matingly engageable with the cutter elements on the other of said assemblies. Upon relative rotation of the cutter assemblies a first series of generally S-shaped slits are formed in the annular workpieces. Continued rotation of the cutter assemblies through a plurality of revolutions produces successive series of slits intersecting the first series of slits to form a circumferentially extending generally waveshaped shear cut.

3,398,616
CONTINUOUS MOTION SHEARING MACHINE, PARTICULARLY FOR PRODUCTS IN STRIPS
Hubert Elineau, Mont-Saint-Aignan, France, assignor to R. Senard, et Fils, Maromme, France, a French company
Filed July 5, 1966, Ser. No. 562,670
Claims priority, application France, July 6, 1965, 7,107
7 Claims. (Cl. 83—305)

1. Shearing machine with a continuous motion, particularly for products in strips, comprising two mechanisms which are identical but symmetrical about the plane of feeding in of the product to be cut, each of these mechanisms actuating one of the shearing machine cutters and comprising a push-rod which is connected to a cutter and the head of which swivels on an eccentric that rotates in turn on the crank-pin of a crank-shaft driven by a motor, the aforesaid eccentric being driven by a planet gear ro-

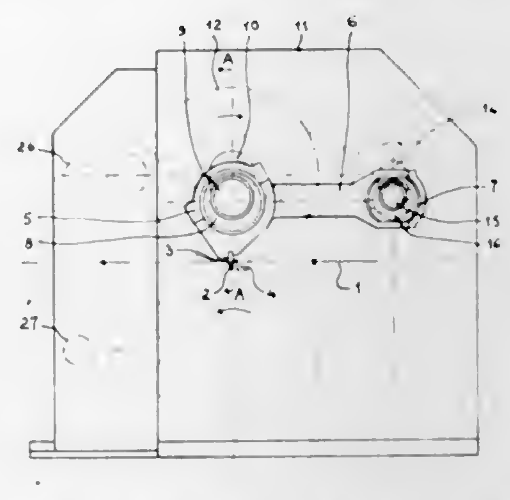

tating round the axle fixed to the crank-shaft and connected to a planet loose pinion engaging with a planet gear with interior teeth, with a rotation speed which is adjustable in relation to the rotation speed of the crankshaft the crosshead of the push-rod being held by a means of guiding.

3,398,617
CUTTING DEVICE FOR CIGARETTE-MAKING MACHINES
Raymond Lanore, Paris, France, assignor to Usines Decoufle, Societe Anonyme, Paris, France, a company of France
Filed Nov. 25, 1966, Ser. No. 596,851
Claims priority, application France, Nov. 26, 1965, 39,910
2 Claims. (Cl. 83—331)

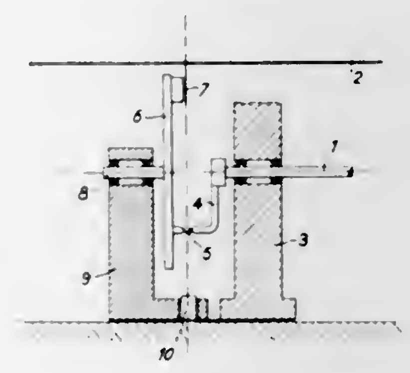

1. A cutting device for machines designed for the manufacture of a continuous rod, notably cigarette manufacturing machines, wherein the rotary cutter is rotatably driven about an axis inclined to the tobacco rod by a relatively small angle usually referred to as the alpha angle, the relative positions being such that the cutting operation proper takes place when the cutter blade is coincident with the straight line constituting the shortest distance between the axis of rotation of said cutter and the axis of said rod, said cutter device comprising a blade supporting plate, a rotary shaft adapted rotatably to drive said plate at such a speed that said blade, during the actual cutting operation, moves along said axis of said rod at a speed equal to the rod speed in the case of cigarettes of mean length, another shaft about which said blade supporting plate is adapted to revolve, said other shaft being in axial alignment with said rotary shaft when the cigarettes to be cut have said mean dimension, a support on which said other shaft is rotatably mounted, said support being adapted to pivot about an axis coincident with the straight line constituting the shortest distance from the

axis of rotation of said blade and the axis of said rod, and elastic coupling means for rotatably driving said plate from said rotary shaft.

3,398,618
PUNCH ALIGNMENT MECHANISM FOR BUSINESS FORMS MACHINE
Louis Schriber, Dayton, Ohio, assignor to The Schriber Company, Dayton, Ohio, a corporation of Ohio
Filed Dec. 19, 1966, Ser. No. 602,924
4 Claims. (Cl. 83—343)

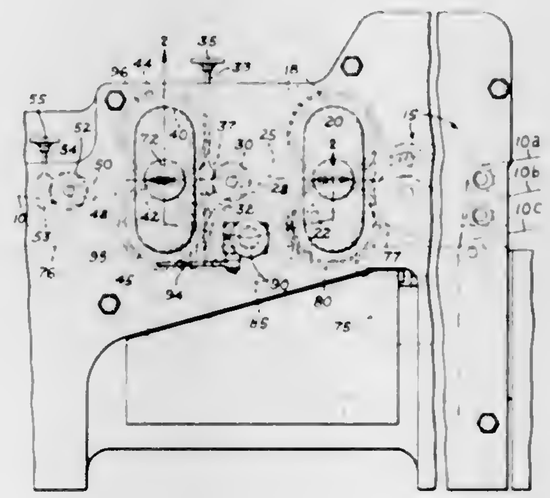

An alignment and drive mechanism for the file hole punch on a business forms machine includes a release device for disengaging the punch and die drive gears from the drive of the machine to permit an approximate locating of the file hole punch and die set, after which the gears are again engaged. Precise adjustment is accomplished through movement of pivotally mounted guide rollers at opposite sides of the punch and die set.

3,398,619
PHOTOCOPY MACHINE HAVING A VARIABLE SPEED COPY PAPER CUTTER
Gordon W. Nichols, Binghamton, and Edward J. Radin, Johnson City, N.Y., assignors to GAF Corporation, a corporation of Delaware
Filed Oct. 26, 1966, Ser. No. 589,693
7 Claims. (Cl. 83—363)

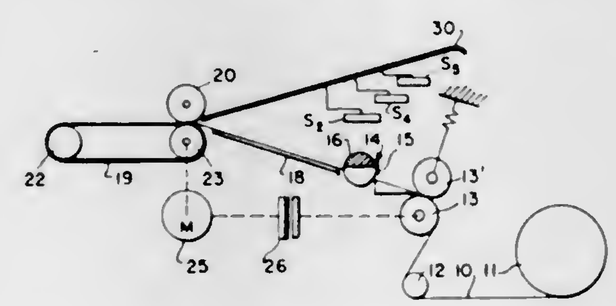

1. A photocopy machine for making copies from an original onto a light-sensitive copy paper which is being fed from a copy paper roll, a variable speed feed means for feeding said copy paper in a predetermined paper feed path, said feed means including a variable speed electric motor; cut-off means for said copy paper; electrical means controlling the operation of said cut-off means; and means sensing the speed of said motor, said speed sensing means controlling the application of potential to said electrical means thus controlling the operation of said cut-off means, whereby the actuation of said cut-off means will be dependent on speed of feed of said copy paper.

3,398,620
INSTALLATION FOR CUTTING-OUT MATERIAL IN SHEETS
Raymond J. Gautron, La Courneuve, France, assignor to Corpet Louvet & Cie, La Courneuve, Seine-Saint-Denis, France, a French corporation
Filed May 6, 1966, Ser. No. 548,281
Claims priority, application France, May 7, 1965, 16,290
13 Claims. (Cl. 83—430)

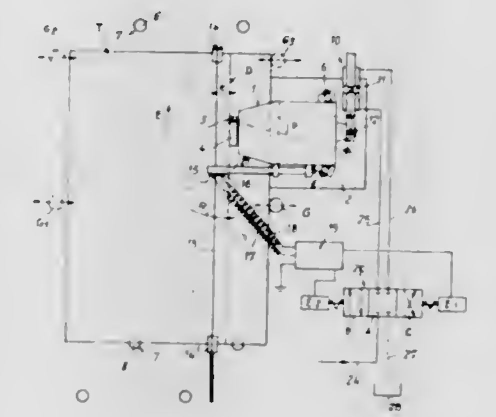

Apparatus for cutting sheet material including pivotally mounted shears for cutting the sheet material and means to move the sheet material relative to the shears. The sheet material is loosely guided with respect to the shears and means are provided which are responsive to angular variations of the sheet material for adjusting the angle of the shears.

3,398,621
SHEET METAL SHEARING MACHINE
Ernst Theodor Sack, Hosel, Germany, assignor to Maschinenfabrik Sack G.m.b.H., Dusseldorf-Rath, Germany
Filed Oct. 28, 1966, Ser. No. 590,316
4 Claims. (Cl. 83—454)

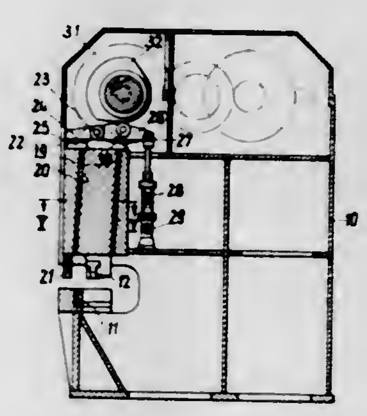

1. In a sheet metal shearing machine of the kind comprising a travelling blade, a stationary blade, and means for adjusting the gap between said travelling and stationary blades in a direction perpendicular to the plane of cut; the improved gap adjusting means which comprises a hold-down carrier, at least one hold-down mounted on said hold-down carrier, means slidably mounting said hold-down carrier for movement to and fro along a path parallel to the line of cut but inclined to said plane of cut, means driving said hold-down carrier along said path, a frictional connection interconnecting said drive means and said hold-down carrier, a carrier for said travelling blade, and means slidably mounting said travelling blade carrier for movement relatively to said hold-down carrier in a direction parallel to said cutting plane, whereby during a shearing operation said hold-down carrier moves until said hold-down engages the sheet metal workpiece

thus setting said gap between said blades whereafter said travelling blade and travelling blade carrier move relatively to said hold-down carrier to make said cut.

3,398,622
MUSICAL INSTRUMENTS
Walter E. Smith, P.O. Box 408, Caldwell, Idaho 83605
Filed May 28, 1965, Ser. No. 459,551
4 Claims. (Cl. 84—267)

The plane of the strings of a guitar is slanted so that when the guitar is held in an upright position by a standing musician, the plane of the strings is neither horizontal nor vertical, but is inclined at an intermediate position, so that the steel bar used with a Hawaiian-type guitar can be manually moved by the musician along the length of the strings. Also, a new tuning system for the strings makes it possible to play, for any one position of the slide bar, a major chord in either one of two different keys, a major chord with a diminished seventh, a major chord plus a sixth or a diminished seventh chord, or a minor chord.

3,398,623
MUSICAL INSTRUMENTS
Walter E. Smith, Caldwell, Idaho (℅ Walt Smith Cattle Co., Donnelly, Idaho 83615)
Continuation-in-part of application Ser. No. 459,551, May 28, 1965. This application Sept. 14, 1965, Ser. No. 487,180
15 Claims. (Cl. 84—267)

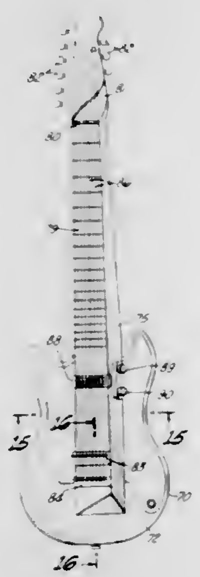

A guitar has a body and a neck, the neck comprising part of an integral stem which carries the string anchor, inclined bridge and inclined nut over which the strings are tensioned in a common plane.

3,398,624
DRINKING STRAW AND TONE GENERATOR
Henry Kurt Stoessel, 21 W. 45th St. 10036, and Tomas Newbery, 116 Pinehurst Ave. 10033, both of New York, N.Y.
Filed Oct. 22, 1965, Ser. No. 502,035
2 Claims. (Cl. 84—330)

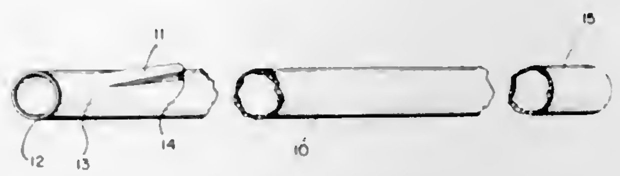

A combined drinking straw and tone generator comprising a resilient plastic tube member open at both ends and including an integral resonating reed for producing a tone, the reed being disposed sufficiently close to one end of the tube to permit the reed and the one end to be encompassed within the mouth when the device is used as a straw.

3,398,625
SELF-TAPPING SCREW
Carl Herman Ansingh, Milton, Ontario, Canada, assignor to P. L. Robertson Mfg. Co. Limited, Milton, Ontario, Canada
Filed Oct. 22, 1965, Ser. No. 500,922
4 Claims. (Cl. 85—46)

A screw having a threaded shank terminating in a reduced lower end and having an elliptical cross section portion above the reduced lower end, a circular cross section portion adjacent the head, and a smoothly and continuously progressing transition portion between the circular and elliptical portions, the threads in the elliptical portion being relatively deeper and more sharply crested at the ends of the major axis thereof than at the ends of the minor axis, and the threads in the circular portion being sharply crested and uniform in depth, the maximum major dimension of the lower elliptical shank portion, transverse the screw axis being greater than the diameter of the circular portion.

3,398,626
RIVET COVER PAD
Robert M. Storey, P.O. Box 329, Nocona, Tex. 76255
Filed Sept. 27, 1966, Ser. No. 582,351
1 Claim. (Cl. 85—50)

A protective cover for the inner end of a rigid connector which extends through and secures together multiple thicknesses of sheet material such as employed in a

football helmet, or other body covering device. The protective cover comprises a unitary member of elastomeric material which is of generally flattened tubular configuration of continuous cross-section and has relatively-spaced

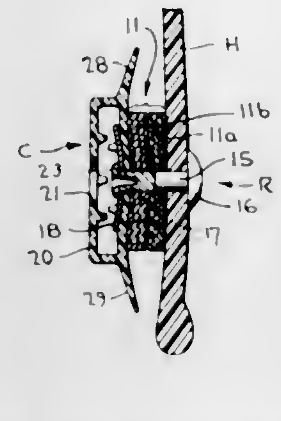

parallel walls. These walls are provided with registering circular openings through one of which the connector is passed. The other opening permits access to the connector by suitable tools such as a riveting tool.

3,398,627
ANCHOR BOLTS
Anton Tendler, 1255 Grover Road, St. Louis, Mo. 63125
Continuation-in-part of application Ser. No. 382,916, July 15, 1964. This application Oct. 4, 1966, Ser. No. 584,207
10 Claims. (Cl. 85—71)

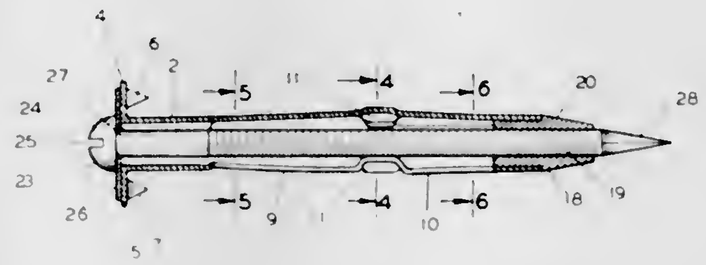

An anchor bolt having a tubular body consisting of forward and rear collars which are connected by a plurality of bands. The rear band merges into a pair of radial flanges having inwardly struck prongs. The forward collar is fitted with a nut having a frusto-conical surface. A bolt extends through the tubular body and engages the threads of the nut. The portion of the bolt projecting beyond the nut is tapered to a point which forms a continuation of the frausto-conical surface of the nut. Intermediate their ends the bands are provided with indentations which will abut against the bolt and prevent permanent inward deformation of the bands when they are subjected to laterally directed forces.

3,398,628
STUD ASSEMBLY WITH TAPERED EXPANSION SEGMENT
George S. Wing, Torrance, Calif., assignor to Hi-Shear Corporation, Torrance, Calif., a corporation of California
Filed Dec. 28, 1966, Ser. No. 605,276
2 Claims. (Cl. 85—73)

A stud assembly which can be threaded into a tapped hole in a workpiece and then set by an axial pull. This stud assembly later can be removed by an axial push followed by an unthreading operation. It utilizes a sleeve with an external thread and an internal taper. A stud bolt carries and backs up a tapered expansion segment. Axial motion between the two tapers sets the sleeve tightly in

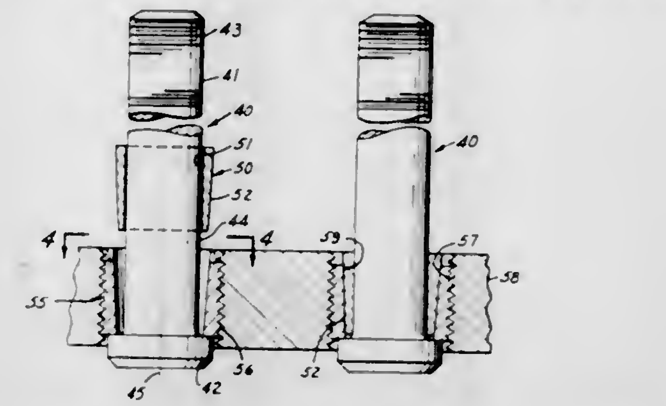

the hole and tightly retains the stud bolt to the workpiece through the sleeve.

3,398,629
FIREARM CARTRIDGE LUBRICATOR
Ole N. Olson, 2909 Quentin Ave. S., Minneapolis, Minn. 55416
Filed Apr. 17, 1967, Ser. No. 631,345
2 Claims. (Cl. 86—19)

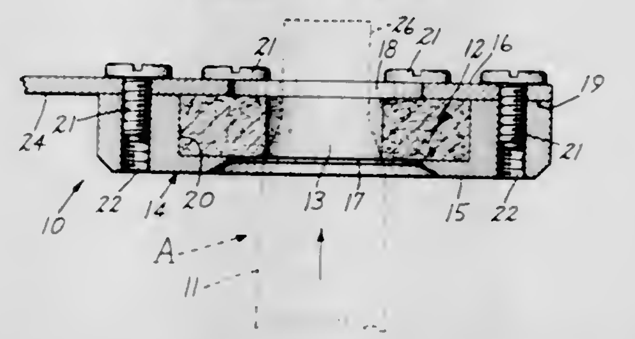

A device having an annular wick impregnated with lubricant and means for securing same to a supporting surface, the central opening of the wick providing means for applying a coat of lubricant to the exterior surface of a spent firearm cartridge case during the reloading process thereof.

3,398,630
NON-CONTACT TYPE OF MEASURING MICROSCOPE
Ralph K. Dakin, Pittsford, N.Y., assignor to Bausch & Lomb Incorporated, Rochester, N.Y., a corporation of New York
Filed Nov. 23, 1964, Ser. No. 412,919
3 Claims. (Cl. 88—14)

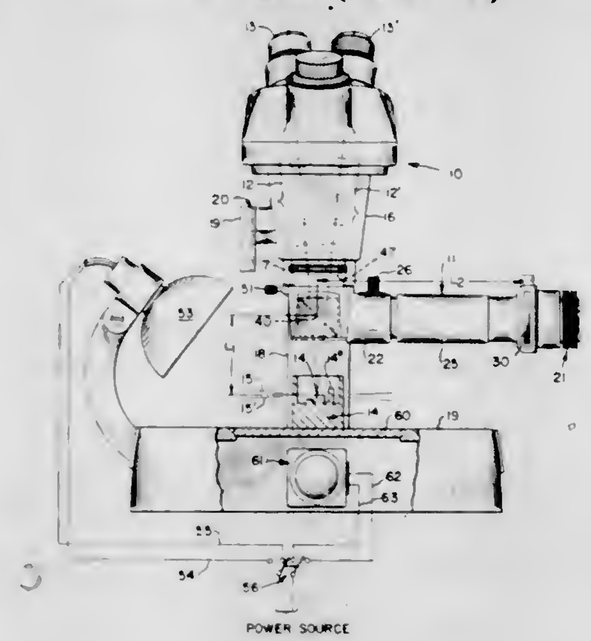

A non-contact type of measuring microscope having a pair of stereoviewing optical systems which form a pair

of stereo images of a point in an object surface on which the systems are focused, said microscope further having a single illuminated reticle which is reflected upwardly from a lateral direction in a beam by a beam divider located across the stereo axes between said systems and said object surface to form an image of the reticle in the eyepiece focal plane of each system in coincidence with said stereo images whereupon the illuminated reticle appears to lie on said object surface.

3,398,631
PROJECTED SCALE MICROMETER FOR MICROSCOPE
Robert F. McGivern, Irondequoit, and Robert T. Shone, Pittsford, N.Y., assignors to Bausch & Lomb Incorporated, Rochester, N.Y., a corporation of New York
Filed Dec. 23, 1964, Ser. No. 420,633
1 Claim. (Cl. 88—14)

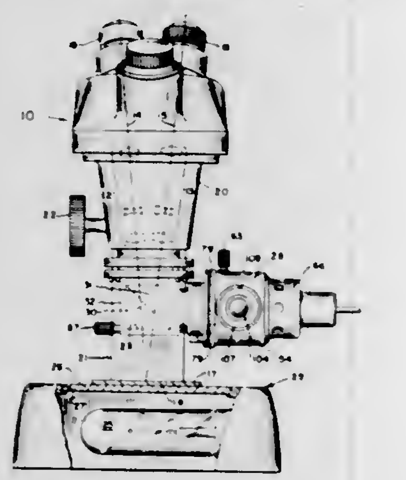

A non-contact projected scale micrometric measuring device wherein the image of an illuminated scale is projected by a beam divider, located in a stereooptical lens system, into the focal plane of the system along with the image of an object to be measured which is located in the object plane of said system, the device being constructed to facilitate rotation of said scale in the field of view of the instrument.

3,398,632
PROCESS FOR ANALYZING THE CHEMICAL COMPOSITION OF SOLID MATERIAL USING A HIGH TEMPERATURE ILLUMINATING FLARE
Wayne A. Proell, Seymour, Ind., assignor to Standard Oil Company, Chicago, Ill., a corporation of Indiana
No Drawing. Original application Nov. 24, 1964, Ser. No. 413,647. Divided and this application Mar. 31, 1966, Ser. No. 558,179
1 Claim. (Cl. 88—14)

Novel process for analyzing the chemical composition of solid materials using a high temperature illuminating flare comprising chlorine trifluoride and a finely divided metal having a high heat of formation with chlorine and fluorine.

3,398,633
APPARATUS FOR EFFECTING DESIRED REGISTRATION BETWEEN A PATTERN AND A PRINTING SURFACE
Rolf T. Raivio, Kulosaaren Puistotie 42 as. 39, Helsinki, Finland
Continuation-in-part of application Ser. No. 258,318, Feb. 13, 1963. This application Apr. 11, 1967, Ser. No. 630,137
Claims priority, application Finland, Feb. 16, 1962, 323/62
5 Claims. (Cl. 88—14)

A machine for registering a printing surface with a model surface comprises relatively movable supports for the two surfaces and an enlarging optical system for viewing superimposed images of corresponding regions of the two surfaces. The two supports and the optical system are relatively movable in the printing direction so that the two surfaces may be conjointly explored. An adjusting mechanism is provided so as to move one or the

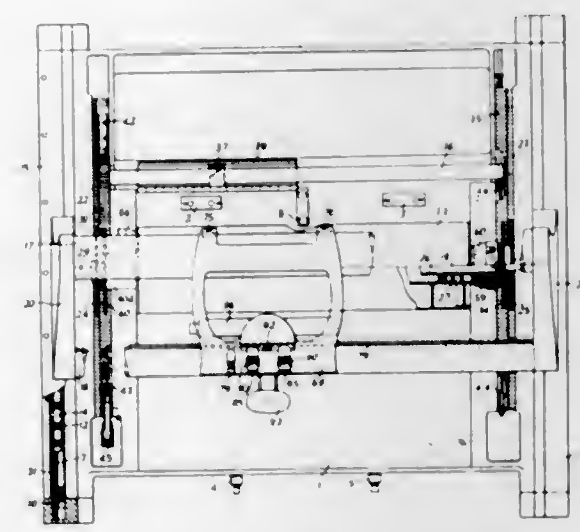

other of the supports or the optical system in such a manner as to effect a predetermined gliding movement of the superimposed images with respect to each other in the printing direction so as to achieve a desired type of registration or misregistration between the two surfaces.

3,398,634
MICROSCOPE
Dan McLachlan, Jr., Columbus, Ohio, assignor to The Board of Trustees of the Ohio State University, Columbus, Ohio
Filed Aug. 27, 1964, Ser. No. 392,479
14 Claims. (Cl. 88—24)

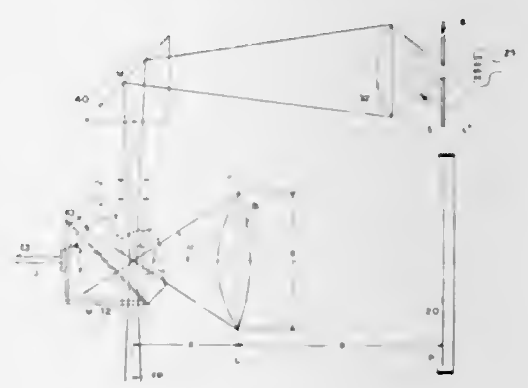

A microscope optical system to increase the useful depth of observation of an object to many times the focal depth of the lens system being used. The object is illuminated only at its focal plane while the object is being scanned through that plane. Thus, the out-of-focus parts of the object are always in darkness.

3,398,635
METHOD AND APPARATUS FOR COPYING ORIGINALS ON DIAZO-TYPE MATERIAL
Henri Gerard Jean De Boer, Delft, Netherlands, assignor to N.V. Lichtdrukpapierfabriek DE Atlas, Delft, Netherlands, a corporation of Netherlands
Filed Aug. 23, 1965, Ser. No. 481,629
Claims priority, application Netherlands, June 28, 1961, 266,457
5 Claims. (Cl. 88—24)

A method and apparatus for copying originals on diazotype material using a source of light and a device for holding an original in a print position. A device is provided for holding plane diazotype material in a position for exposure through the original. A first and second light filter are each placed in a position to receive light reemitted by one entire surface of the diazotype material. The first filter transmits only light which is actinic relative to the diazotype material and the second filter transmits only light which is non-actinic relative to the diazotype material. A first photoelectric element is located behind the first filter in the path of the light from the diazotype material through the first filter and a second photoelectric element is located behind the second filter in the path of the light from the diazotype material through the

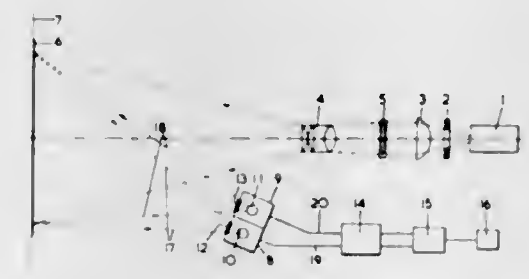

second filter. A device is provided for comparing the two electric currents, electrically connected to both of the photoelectric elements. A signalling device is connected with the comparison device to become operative when the values of the two electric currents have reached a predetermined relation. A shutter is interposed between the source of light and the device for holding an original, operated in response to a signal issued by the signalling device.

3,398,636
PROJECTOR TABLE FOR OVERHEAD PROJECTOR
William MacLachlan, Cherry Hill, N.J., assignor to Display Corporation of America, Philadelphia, Pa., a corporation of Pennsylvania
Filed Dec. 27, 1965, Ser. No. 516,509
6 Claims. (Cl. 88—24)

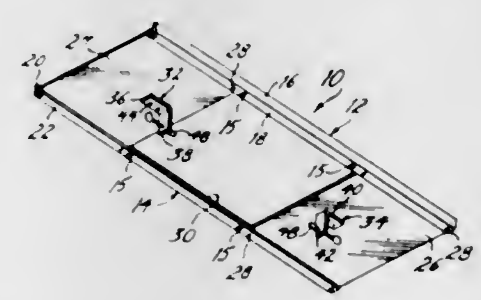

A projector table which is readily attachable to an overhead projector provides space upon which preceding and succeeding overlays relative to the one presently in use, may be placed. Two panels are interconnected by support members and brackets are provided on the underside of the support members for connecting the tray to the projector.

3,398,637
AUTOMATIC FOCUS CONTROL FOR LIGHT PROJECTOR
Edward N. Esmay, Brighton, Earl V. Jackson, Penfield, and Donn E. Stevens, Greece, N.Y., assignors to Bausch & Lomb Incorporated, Rochester, N.Y., a corporation of New York
Filed Feb. 1, 1966, Ser. No. 524,227
4 Claims. (Cl. 88—24)

A visual testing device for administering a tangent field eye test, the device being characterized by a vertical fixation screen whereon a fixation light stimulus is projected for the patient. The light stimulus is provided by a beam projector which is universally mounted so as to throw the beam onto different locations on the tangent screen, the size and color of the spot of light formed by the beam on the screen being variable. Structurally the device includes a light source which is controlled by a rheostat and is focused by a lens system at a variable focal length which is proportional to the changes in the

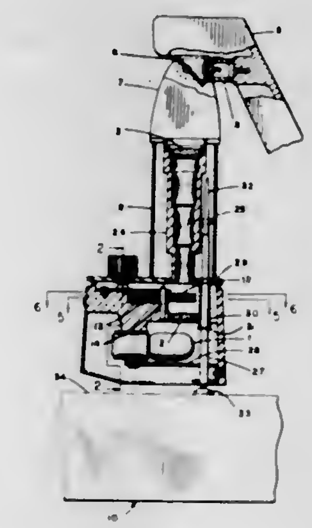

projection distance from the light source to the locations on the screen.

3,398,638
VERTICAL CAMERA
Sigurd Frohlich, 2154 San Marcos, Claremont, Calif. 91711
Filed Mar. 2, 1966, Ser. No. 531,174
5 Claims. (Cl. 88—24)

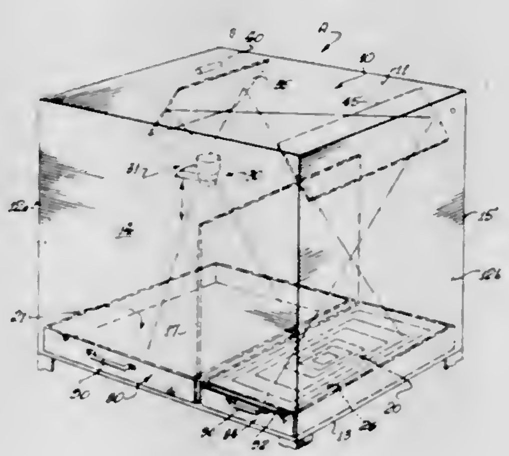

1. A camera comprising:
(a) a housing;
(b) baffle means for dividing said housing into copy and film sections;
(c) means for handling copy in said copy section and means for handling film in said film section;
(d) said film handling means adapted to receive a sheet of film and thereby define a film plane;
(e) said copy handling means adapted to receive a copy and thereby define a copy plane;
(f) a lens, said lens adapted to focus an image from said copy plane;
(g) a light source adapted to direct light coaxially through said lens to said copy plane;
(h) a first mirror interposed between said lens and said light source, the surface of said first mirror be-

ing oriented obliquely to the axis of said lens, said first mirror being partially silvered; and,

(i) a second mirror, said second mirror being adapted to receive light reflected from said first mirror and to direct said reflected light to said film plane.

3,398,639
HOLDING DEVICE FOR A ROCKET IN A LAUNCHER TUBE
Robert Apothéloz, Wallisellen, Switzerland, assignor to Oerlikon-Buhrle Holding Ltd., Zurich, Switzerland
Filed Oct. 4, 1966, Ser. No. 584,162
Claims priority, application Switzerland, Oct. 6, 1965, 13,792/65
2 Claims. (Cl. 89—1.806)

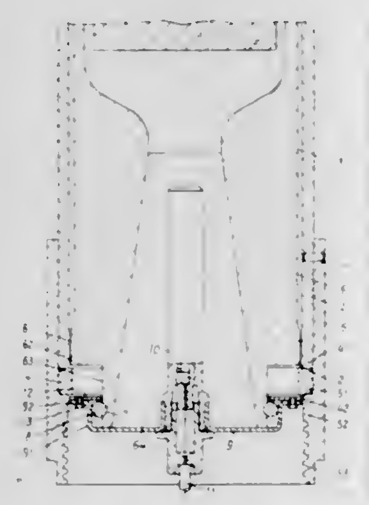

A rocket launcher having a tube with a stop surface containing a rocket with an outer surface. A driving nozzle for the rocket and a device for securing the rocket in the launcher tube. A cap having a rest position covers the nozzle. A thrust member is constructed as an annular disc with breaking elements releasably connecting the cap with the thrust member. The cap, under the influence of the gases emerging from the nozzle on discharge of the rocket is movable in a direction opposite the intended direction of flight of the rocket. A locking element forms a stop for the thrust member and a groove is provided in the outer surface of the rocket. The locking element in the rest position of said cap, is held by said cap in engagement with the groove and on movement of said cap from rest position, is released from said groove so that the thrust member acts together with the stop surface arranged on said launcher tube and the stop surface, in the rest position of the cap prevents movement of the cap in a direction opposite to the direction of flight, without rupture of the breaking elements.

3,398,640
ROCKET LAUNCHER DEVICE
Robert Apothéloz, Wallisellen, Hanspeter Schenk, Horgen, and Alex Gelbert, Geroldswil, Switzerland, assignors to Oerlikon-Buhrle Holding Ltd., Zurich, Switzerland
Filed Dec. 14, 1966, Ser. No. 601,689
Claims priority, application Switzerland, Dec. 23, 1965, 17,742/65
7 Claims. (Cl. 89—1.813)

An ignition device for the starting of rockets wherein the rocket, having a propellant charge, is arranged as a connecting member between a launching trigger arranged on a projector before the same and an ignition casing located behind the same. A common support spring supports the ignition casing via the rocket under a pressure effective towards the front toward the launching trigger. For launching, the launching trigger releases the support, so that the following relative movement of the ignition casing towards the projector begins with a triggering of

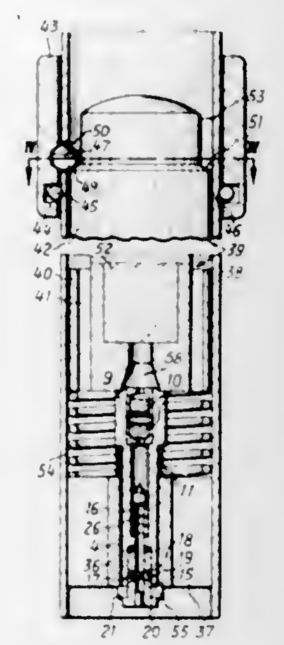

a ball lock securing a detonator percussion pellet of the fuze, whereby the propellant charge is ignited.

3,398,641
TRIMMING APPARATUS
Harry A. Breske, Mishawaka, and Thomas W. Hufziger, Warsaw, Ind., assignors to Uniroyal, Inc., a corporation of New Jersey
Filed Aug. 11, 1966, Ser. No. 571,753
8 Claims. (Cl. 90—13)

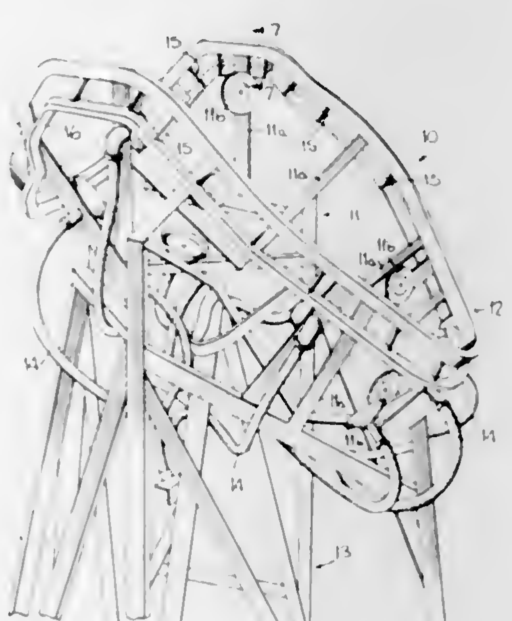

1. A trimming apparatus, comprising means for securely holding an article to be edge-trimmed, rail means encircling the location of said article when the same is positioned on said holding means, said rail means being contoured in accordance with the desired edge contours of said article, and a trimming tool adapted to be moved along said rail means for trimming said article, said rail means including a first part and a second part, and said trimming tool being equipped with first and second bearing means arranged, respectively, to ride freely along said first part of said rail means and to be slidably confined to said second part of said rail means.

3,398,642
DUPLICATING MACHINE TOOL
Hans Grether, Frankfurt am Main, Germany, assignor to Nassovia Werkzeugmaschinenfabrik G.m.b.H., Frankfurt am Main, Germany
Filed Mar. 21, 1966, Ser. No. 535,951
Claims priority, application Germany, Mar. 20, 1965, N 26,422
1 Claim. (Cl. 90—13.1)

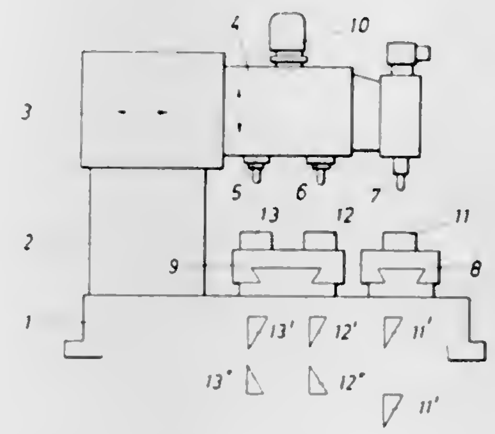

A duplicating machine tool has a tracing unit and at least two milling units. An extension member fastened to the pattern sled and extending over the workpiece sled permits the cutting of the workpieces into two shapes identical with the pattern, or one identical and one mirror shape, or two mirror shapes.

3,398,643
ROTARY PISTON ENGINE, PUMP OR OTHER MACHINE
Hans Schudt, 64/66 Darmstadter Str., 6079 Sprendlingen, Hesse, Germany
Filed June 27, 1966, Ser. No. 560,665
Claims priority, application Germany, July 30, 1965, Sch 37,473
1 Claim. (Cl. 91—60)

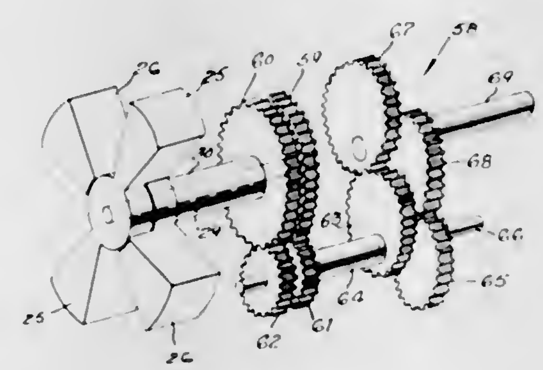

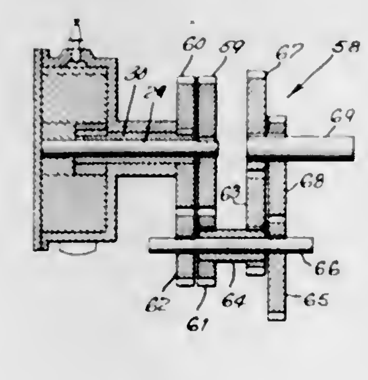

An opposed piston rotary engine or pump embodying four oval gears controlling the opposed pistons through two-to-one gearing, and a power shaft driven by the two oval gears placed in the gear train most remote from the pistons.

3,398,644
FLUID-OPERABLE REVERSIBLE MOTOR COMPRISING A ROTARY PISTON
Ludwig Wetzel and Paul Belzner, Maulbronn, Germany, assignors to Schmid & Wezel, Maulbronn, Germany
Filed June 8, 1966, Ser. No. 556,068
Claims priority, application Germany, Dec. 27, 1965, Sch 38,255
1 Claim. (Cl. 91—138)

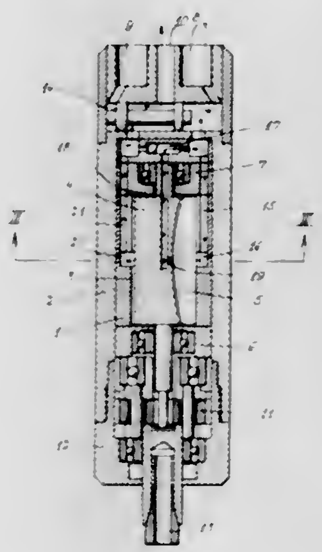

A fluid-operable reversible motor having a cylinder with a longitudinal axis, as a stator, with a bore eccentric to the cylinder axis in which is a rotor or a piston body concentric to said cylinder mounted for rotation in the bore, the piston body having radial slots in which operate vanes guided in the slots for movement radially outwardly in contacting the cylinder in the operation of the fluid motor with valve means for bleeding a portion of the pressure and duct means for directing this bled pressure to the piston body and radially outwardly towards the radial slots for movement of the vanes radially outwardly at a predetermined time before the main pressure drives the motor in either of two opposite senses.

3,398,645
MULTIPLE EXTENSION APPARATUS
Harold K. Nansel, Waverly, Nebr., assignor to National Crane Corporation, Waverly, Nebr., a corporation of Nebraska
Filed Nov. 30, 1966, Ser. No. 598,093
8 Claims. (Cl. 91—173)

1. A multiple extension apparatus comprising, in combination,

a first hollow section one end of which is adapted to be secured to a structure,

a second hollow section slidably mounted in said first section,

a third hollow section slidably mounted in said second section,

first fluid actuated means operably connected to said first and second sections and operable to move said first and second sections longitudinally relative to each other,

second fluid actuated means operably connected to said second and third sections and operable to move said second and third sections longitudinally of each other,

control means for directing fluid under pressure to said first and second means; wherein the improvement comprises,
latch means for releasably locking said second and third sections in a retracted position, and
actuating means on said first section for engaging said latch means when said second section is in its extended position to permit extension of said third section relative to said second section.

3,398,646
LEAD SIGNAL GENERATION APPARATUS FOR USE IN CONTROL SYSTEMS
George T. Baltus and Raymond Warmuz, Tonawanda, N.Y., assignors to Bell Aerospace Corporation, a corporation of Delaware
Filed Apr. 8, 1966, Ser. No. 541,215
11 Claims. (Cl. 91—217)

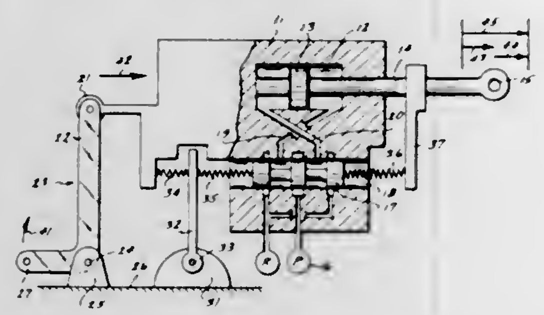

Disclosed is a hydraeric apparatus for connection in series with a control link adapted to receive mechanical input signals. The apparatus responds to the mechanical input signals in such a manner as to cause the output thereof to lead the mechanical input signal proportional to the velocity of the mechanical input signal, upon the initial application thereof.

3,398,647
SERVO CONTROL SYSTEM UTILIZING LOAD PRESSURE FEEDBACK APPARATUS
George T. Baltus and Raymond Warmuz, Tonawanda, N.Y., assignors to Bell Aerospace Corporation, a corporation of Delaware
Filed June 6, 1966, Ser. No. 555,418
4 Claims. (Cl. 91—384)

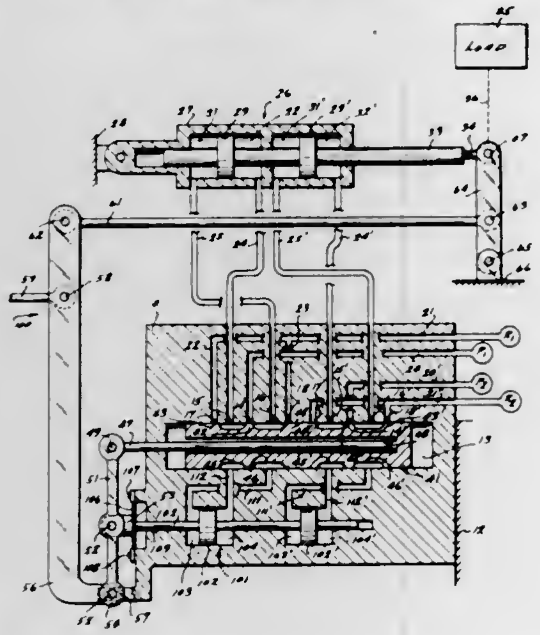

Disclosed is a negative feedback apparatus adapted to be responsive to any pressure differential appearing across the actuator, irrespective of how the pressure differential is created. The negative feedback apparatus comprises a pressure differential sensitive device in the form of a piston having a rod connected thereto. The rod in turn is connected through a mechanical linkage to a control valve which controls the flow of fluid under pressure between a source thereof and the actuator which is connected to the load.

3,398,648
NAILING MACHINE
Anthony E. Cairatti, Herrin, Ill., assignor to Werner Schafroth, Herrin, Ill.
Filed Jan. 23, 1967, Ser. No. 610,970
9 Claims. (Cl. 91—417)

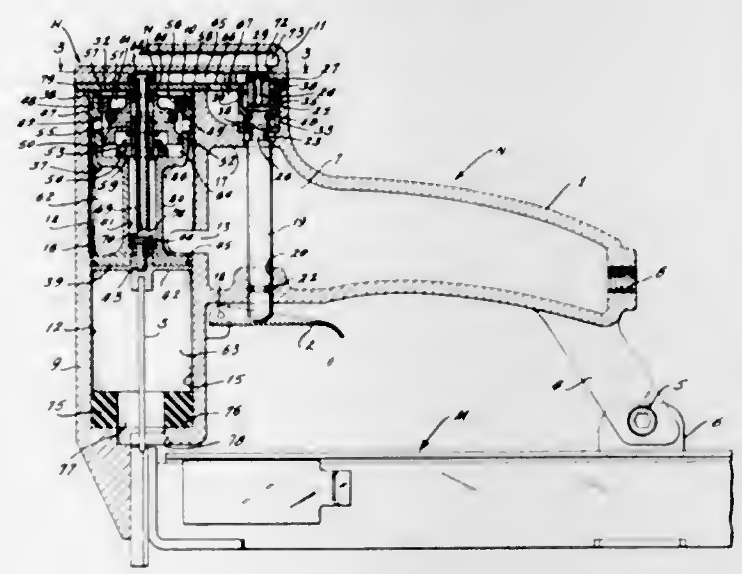

A nailing machine in which the valve is mounted in a driving piston mounted in a stationary cylinder over whose top no pressure fluid is directed to force the piston downwardly, so that pressure fluid does not spill in over the top of the cylinder and the cylinder does not move in a vertical direction, but the piston moves down because of the valve within the piston itself.

3,398,649
HYDRAULIC CONTROL SYSTEM
Kenneth G. McMillen, Fort Wayne, Ind., assignor to Borg-Warner Corporation, Chicago, Ill., a corporation of Illinois
Filed Nov. 16, 1966, Ser. No. 594,828
7 Claims. (Cl. 91—420)

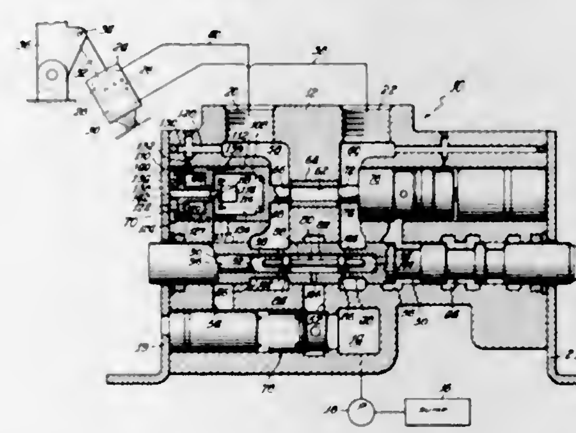

1. In a hydraulic control system for a hydraulic work cylinder provided with a slidable piston, means for delivering fluid under pressure to said work cylinder, manual valve means selectively operable to control the flow of fluid to said cylinder, the improvement comprising means for relieving shock pressures in said system when said manual valve means is in closed position, said last named means comprising a normally closed damping valve in fluid communication with one side of said cylinder piston and openable in response to a shock load to provide free fluid communication between one side of said cylinder piston and a low fluid pressure zone, said damping valve comprising a body, a bore formed in said body, a hollow plunger including a normally closed poppet slidably disposed within said bore, a seat for said poppet, a pilot valve mounted within said plunger, a spring normally biasing said pilot valve to closed position, said pilot valve being openable in response to a sudden pressure increase to create a low pressure zone at one side of said plunger to afford movement of said poppet away from its seat and means for increasing the loading of said spring in response to an increase of static fluid pressure at said one side of said cylinder piston.

3,398,650
APPARATUS FOR REGULATING FLUID FLOW WITH RESPECT TO A HYDRAULIC LOAD
Kenneth D. Garnjost, Buffalo, N.Y., assignor to Moog Inc., East Aurora, N.Y., a corporation of New York
Filed Feb. 4, 1966, Ser. No. 525,242
14 Claims. (Cl. 91—421)

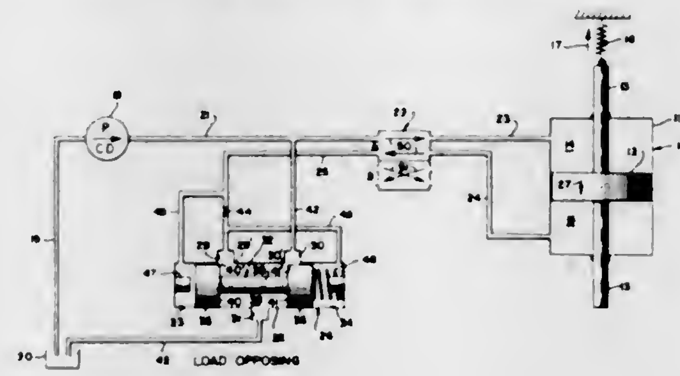

An arrangement for maintaining flow of operating fluid with respect to a load actuator substantially constant regardless of whether the load is aiding or opposing the actuator and simultaneously regulating the power from the flow supply in accordance with that required to drive the load.

3,398,651
SAFETY LATCH FOR A FLUID POWERED WORK CYLINDER
Frank F. Folmer, Roseville, Mich., assignor to Savair Products Co., Warren, Mich., a corporation of Michigan
Filed Mar. 18, 1966, Ser. No. 535,427
2 Claims. (Cl. 92—27)

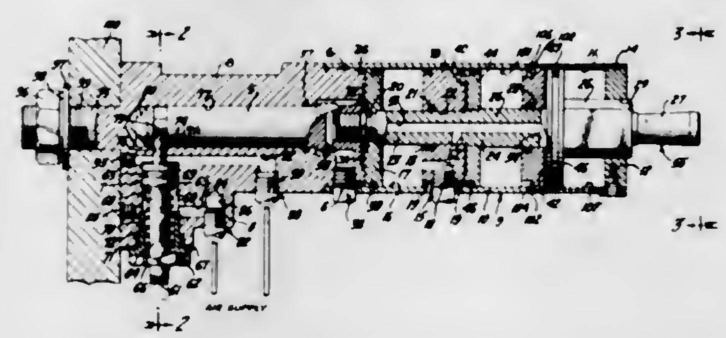

Improvements are disclosed in fluid powered work cylinders of the type useful in the resistance welding art comprising air powered safety latch means for protection of the operator of the welding machine in which the work cylinder is incorporated, said safety latch means comprising an air powered double acting latch piston and an air circuit therefor which is separate and independent of the fluid work circuit for the work piston, said safety latch means latching the work piston in its return position and exclusively controlling the initiation of each power stroke of the work piston.

3,398,652
FLUID CYLINDER ASSEMBLY
John S. Miller, Poland, Ohio, assignor to The McKay Machine Company, Youngstown, Ohio
Original application June 25, 1963, Ser. No. 290,454, now Patent No. 3,266,283. Divided and this application Mar. 8, 1966, Ser. No. 553,591
3 Claims. (Cl. 92—165)

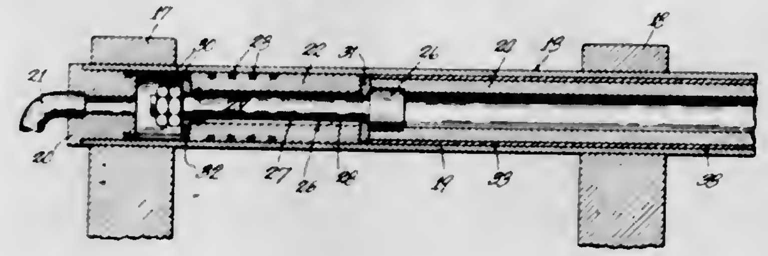

A piston and rod assembly operating within a cylinder with a non-marring material covering the rod in the radial space between the rod and the cylinder. The piston rod has universal tilting movement with respect to the piston. Fluid bathing means is provided to remove deleterious material from the piston rod.

3,398,653
PISTON
John D. Foster, 3910 W. Erie Ave., Lorain, Ohio 44053
Filed Aug. 24, 1966, Ser. No. 574,775
3 Claims. (Cl. 92—178)

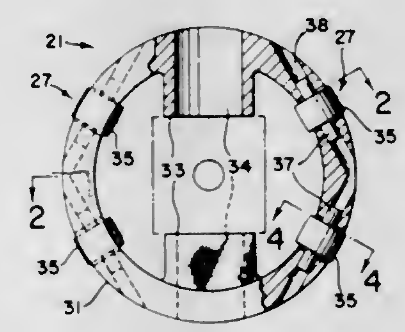

This application relates to a piston having two sets of four roller bearings mounted and supported in a skirt, one set being above and the other set below the wrist pin so that only the bearings, and not the piston come into contact with the cylinder wall. Each roller bearing is normally mounted on a pin which forms an angle of 30° with the wrist pin.

3,398,654
SLOTTED BASE SWAB CUP
Tom C. Waldrop, Fort Worth, Tex., assignor to Royal Industries, Inc., a corporation of Texas
Filed Sept. 26, 1966, Ser. No. 582,055
7 Claims. (Cl. 92—241)

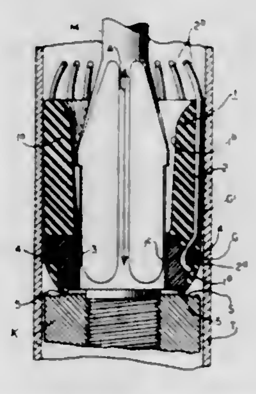

A swab cup and reinforcing structure including a base member having radial slots for holding hooked reinforc-

ing elements precisely aligned, the slots having outwardly curving lower surfaces matching the contours of the lower ends of the reinforcing elements and vertically supporting them, and the base member having outwardly extending projections near the tops of the slots, and a ring member located between the projections and the lower ends of the hooked reinforcing elements to be axially confined by both, while radially confining the reinforcing elements in the slots, the ring in some modifications being made slightly expansible.

3,398,655
MOLDED BASE SWAB CUP
Tom C. Waldrop, Forth Worth, Tex., assignor to Royal Industries, Inc., a corporation of Texas
Filed Dec. 15, 1966, Ser. No. 602,078
8 Claims. (Cl. 92—241)

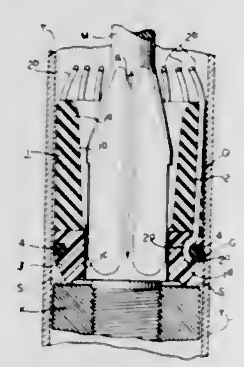

A reinforced swab cup having a rubber body with axially disposed reinforcing elements embedded therearound, the lower ends of the reinforcing elements being encapsulated in a semi-rigid plastic material, such as nylon, hard rubber, etc., and the lower ends of the reinforcing elements being radially confined by a ring about which the elements and their encapsulating material are outwardly pivotal through a small increment. In addition, the method of making such a cup including the step of first forming an intermediate reinforcing structure comprising the encapsulating base and reinforcing elements, and the subsequent step of molding the rubber body thereabout.

3,398,656
WEB GUIDING AND PLOWING SYSTEM FOR A PACKAGING MACHINE AND THE LIKE
Charles E. Cloud, Wilmette, and James R. George, Franklin Park, Ill., assignors to Cloud Machine Corporation, Skokie, Ill., a corporation of Delaware
Filed July 28, 1966, Ser. No. 568,611
27 Claims. (Cl. 93—13)

This disclosure involves a method and apparatus for controlling the position of a web guiding or forming station relative to a web being fed thereto, and which web may be thereafter further shaped and formed. More specifically, the device provides a pivoted plow in combination with a web guiding arrangement which permits controlled guidance of the web to a subsequent station. The plow can assist in the controlled folding of a web material as it passes therethrough.

3,398,657
BOX END FOLDING AND STAPLING MACHINE
Lionel H. Saucier and Frank Emmett Meyer, New Orleans, La., assignors, by direct and mesne assignments, to Owens-Illinois, Inc., Toledo, Ohio, a corporation of Ohio
Filed Sept. 22, 1966, Ser. No. 581,314
8 Claims. (Cl. 93—36)

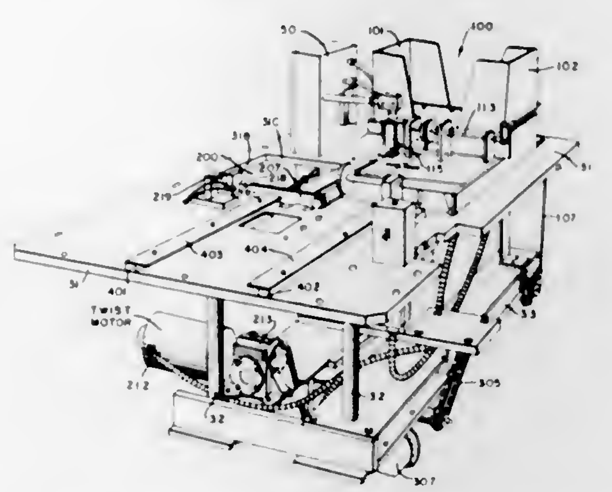

1. A box end folding and stapling machine for folding and stapling previously scored box end blanks having two score lines proximate one end of the blank comprising

(a) a supply hopper for receiving a vertical stack of box end blanks and ejecting a single blank at a time from the bottom of the stack,
(b) a twist station positioned to receive a box end blank and retain one end thereof while permitting the remainder of the blank to be twisted beneath, under, over and about the retained end,
(c) horizontal transfer means positioned to engage and transfer the single box blank from the bottom of the supply hopper and to transfer the box blank to said twist station in position to be retained at one end and twisted 360° about the retained end, and
(d) stapling means positioned to staple the folded box end.

3,398,658
METHOD OF SEALING CARTONS, AND CARTONS THUS SEALED
Erik Rune Jonson, Norrkoping, Sweden, assignor to Esseltepac Aktiebolag, Norrkoping, Sweden
Filed Nov. 30, 1965, Ser. No. 520,296
Claims priority, application Sweden, Dec. 2, 1964, 14,529/64
5 Claims. (Cl. 93—36.01)

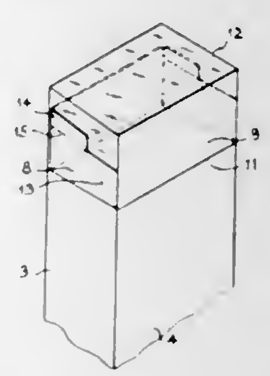

The method according to the invention is substantially characterized by the steps of sealing the lining at its mouth, with lining material in application with lining material, by means of a pair of press jaws or like members one of which jaws engages the lining while the other jaw engages one of the flaps serving as end closure members, against which flap the lining is in application. The carton sealed in accordance with the method.

3,398,659
APPARATUS FOR FOLDING AND TUCKING A CONTAINER CLOSURE
Harry B. Egleston, Livonia, Mich., assignor to Ex-Cell-O Corporation, Detroit, Mich.
Filed Apr. 28, 1967, Ser. No. 634,633
21 Claims. (Cl. 93—44.1)

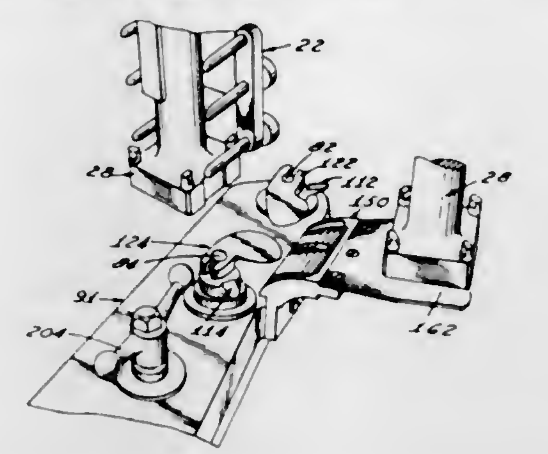

A folding and tucking apparatus for a container end closure fabricating machine where a pair of oppositely rotating blades have pitch-angles that cooperate with an inclined fixed camming shoe such that when the blades are rotated to operate on the closure the blades are inclined toward the camming shoe. An overload clutch is connected with the drive means to automatically disengage the rotary blades and the fabricating machine during a jam-up of the folding and tucking apparatus.

3,398,660
MACHINE FOR MAKING FRAME BLANKS AND FOR THEREAFTER FORMING SAID BLANKS AROUND AN ARTICLE
Howard N. Watrous, Cincinnati, Ohio, assignor to The Procter & Gamble Company, Cincinnati, Ohio, a corporation of Ohio
Filed Sept. 20, 1966, Ser. No. 580,774
26 Claims. (Cl. 93—49)

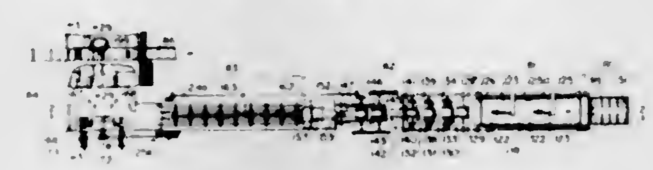

1. A machine for forming a frame blank for an article to be packaged, said apparatus comprising a hopper for receiving a plurality of flat packaging blanks in a stack, said blanks including a plurality of adjoining wall panels and extending portions projecting laterally from the sides of said wall panels, means for moving a blank in said stack to a tubular support forming section, means at said section for folding, bending and forming the extending portions of said blank into a pair of tubular support elements extending longitudinally along the side edges of the wall panels of said blank, and means for adhering the tubular support elements to the inner surface of the wall panels of said blank to complete the transformation of the flat packaging blank into a frame blank for an article to be packaged.

3,398,661
FRAME BLANK FORMING MACHINE
Howard E. Mathes, Harlan Township, Warren County, and Charles R. Hood, Springfield Township, Hamilton County, Ohio, assignors to The Procter & Gamble Company, Cincinnati, Ohio, a corporation of Ohio
Filed Sept. 20, 1966, Ser. No. 580,814
10 Claims. (Cl. 93—52)

1. A machine for forming a frame blank comprising a hopper for receiving a plurality of flat packaging blanks in a stack, said blanks including a plurality of adjoining wall panels and extending portions projecting laterally from the sides of said wall panels, a plurality of parallel longitudinal scores dividing said extending portions into a plurality of areas, means for removing individual blanks from said hopper, means for thereafter aligning each successive blank longitudinally prior to feeding same into a frame former, means for moving each successive blank forward into the frame former, folding means in said

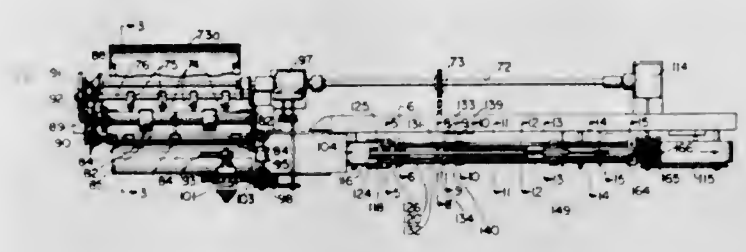

frame former for folding said extending portions of said packaging blanks on said longitudinal scores to form a tubular support from each of said extending portions, said tubular support having essentially straight sides in cross section corresponding to the areas formed on said extending portions by said longitudinal scores, and means for adhering said tubular supports to said wall panels to complete said frame blank.

3,398,662
VEHICLE FOR SPREADING PULVERANT MATERIAL ON A GROUND SURFACE
Harry H. Takata and William D. Tuggle, Golden Valley, and Archie O. Williamson, Edina, Minn., assignors to Bros Incorporated, Minneapolis, Minn., a corporation of Minnesota
Filed Feb. 27, 1967, Ser. No. 618,896
11 Claims. (Cl. 94—39)

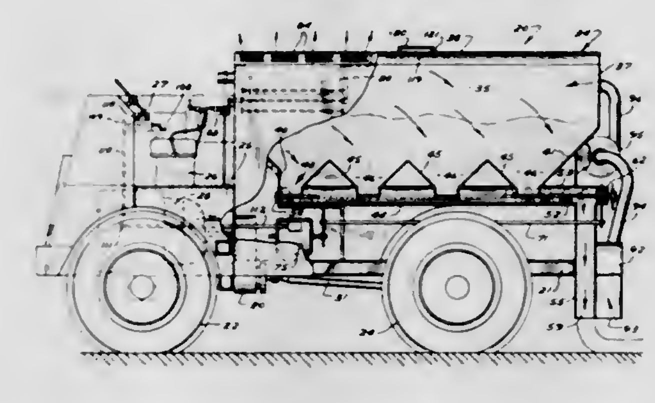

A self-propelled vehicle for spreading portland cement or the like upon a ground surface through means of a plurality of augers extending longitudinally along the bottom of a vehicle carried cement hopper or body to a discharge chute. The rotational speed of the augers has direct ratio to the ground traction wheel speed but this ratio can be selectively varied by the operator. The spreader hopper or body has an air inlet or inlets and an air outlet with a filter interposed therebetween for pneumatic loading and has a collection hood adjacent the discharge chute for returning airborne particles to the hopper.

3,398,663
PAVEMENT FINISHING APPARATUS
John N. Matich, Colton, Calif., assignor to Matich Corporation, Colton, Calif., a corporation of California
Filed Mar. 16, 1966, Ser. No. 534,709
29 Claims. (Cl. 94—45)

Apparatus for finishing pavement which consists of a mobile prime mover assembly and a mobile trailer assembly which carry a finishing float frame therebetween in a

manner which allows various adjustments as to a continuous surface finishing operation. The float frame assembly is constructed to be of a considerable length and it supports float finishing devices having varied characteristics such that a lessened mean surface variation is attained. The float frame employs forward and rear transverse

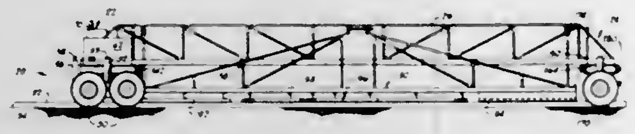

float members which are adjustable as to angle of contact with the pavement surface, and the mid portion of the float frame support carries elongated shearing members in predetermined angular orientation and contact with the pavement surface and these too are adjustable in accordance with required level and profile of the pavement surface.

3,398,664
COMBINED TELEVISION AND PHOTOGRAPHIC MACHINE
James Bonatsos, Philadelphia, Pa., assignor to Radio Broadcasting Company, Philadelphia, Pa., a corporation of Pennsylvania
Filed Nov. 26, 1965, Ser. No. 509,784
15 Claims. (Cl. 95—14)

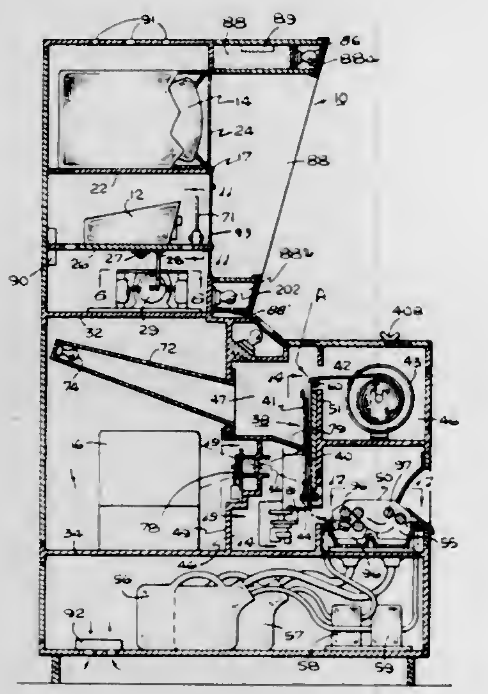

The system includes a television camera, a positive television monitor, and a negative television monitor. Both monitors are connected to receive signals from the camera. The positive television monitor enables the customer to view himself on a screen. Photographic equipment is connected with the negative monitor to produce a photograph showing the customer as he appeared on the positive television monitor. The system is actuated when a coin is deposited.

3,398,665
LENTICULAR SCREEN AUTOFOCUS SYSTEM
Robert S. John, Jr., Deerfield, and Eric K. Maxon, Palatine, Ill., assignors to Bell & Howell Company, Chicago, Ill., a corporation of Illinois
Filed Oct. 24, 1965, Ser. No. 504,520
26 Claims. (Cl. 95—45)

Disclosed is an automatic range determining apparatus for adjusting the focus of an objective of an optical instrument such as a camera. An imaging lens receives light from a scene and focuses the image onto the surface of a moving lenticular screen. A photocell is positioned to receive light effected by the screen. When the lens focuses the scene image on the face of the screen, intensity variations due to the screen are reduced to a mini-

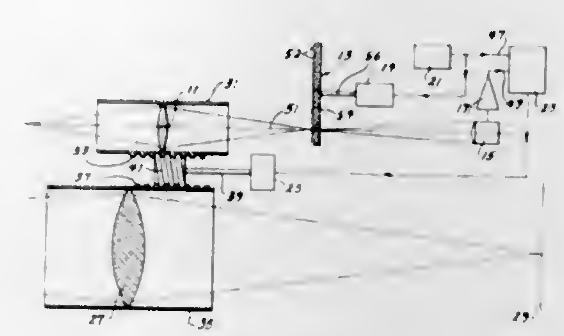

mum so that the screen is invisible to the photocell and a null signal is generated in the circuit in which the photocell is connected. However, when the lens is not focused on the screen, the screen causes the photocell to see striations. A servo motor, in circuit with the photocell, adjusts the lens to focus the same until a null signal indicates that the lens is focused on the lenticular screen.

3,398,666
CAMERA FOCUS ADJUSTING MECHANISM
Seiichi Mamiya, 8–6 2-chome, Nishikata, Bunkyo-ku; Susumu Mamiya, 2–2 1-chome, Hiratsuka, Shinagawa-ku; and Hiroshi Mamiya, 8–6 2-chome, Nishikata, Bunkyo-ku, all of Tokyo-to, Japan
Filed Jan. 20, 1966, Ser. No. 521,941
Claims priority, application Japan, Feb. 26, 1965, 40/11,150
4 Claims. (Cl. 95—45)

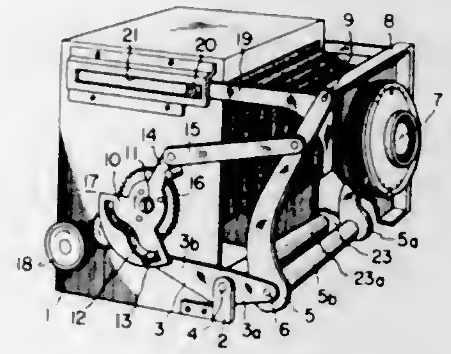

A focus adjusting mechanism for a photographic camera having a lens support member for holding a lens structure which is pivotally mounted on the camera with the pivotal mounting being movably mounted for movement between two extreme positions in a straight line parallel to the optical axis of the camera. The focus adjusting mechanism has an extension lever structure with one end pivotally connected to the lens support member and the other end pivotally mounted on a mounting structure which is movable in a circular arc generally transverse to the optical axis of the camera. A rotating device is coupled to the extension lever structure and to the mounting structure for simultaneously rotating the extension lever structure around the pivotal mounting on the mounting structure, and moving the mounting structure through the circular arc so that the lens support member is moved in a straight line parallel to the axis of the camera.

3,398,667
SHUTTER FOR PHOTOGRAPHIC CAMERAS
Gerd Kiper, Unterhaching, near Munich, Germany, assignor to Agfa-Gevaert Aktiengesellschaft, Leverkusen, Germany
Filed Aug. 18, 1965, Ser. No. 480,586
Claims priority, application Germany, Aug. 21, 1964, A 46,910
14 Claims. (Cl. 95—53)

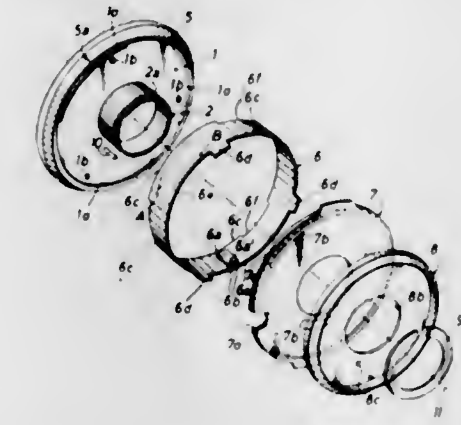

The shutter housing of a photographic camera comprises a main support having a mounting plate and a cylinder extending forwardly from the mounting plate, a cover located in front of the mounting plate and surrounding the cylinder, a split ring or a nut connecting the cover to the cylinder, and a cylindrical shell located between and fixed in position by the mounting plate and the cover. The shell surrounds the cylinder and has projections which extend into recesses provided in the mounting plate and/or cover. The shell consists of a strip of coiled sheet metal whose ends are riveted or otherwise connected to each other.

3,398,668
AUTOMATIC PHOTOGRAPHIC SHUTTER
Franz W. R. Starp, Calmbach, Black Forest, Germany, assignor to Prontor-Werk Alfred Gauthier, G.m.b.H., Calmbach, Black Forest, Germany, a corporation of Germany
Filed Oct. 22, 1965, Ser. No. 501,947
Claims priority, application Germany, Oct. 23, 1964, G 41,844
7 Claims. (Cl. 95—53)

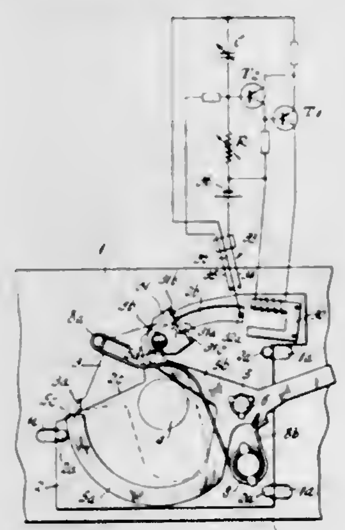

An automatic shutter having a lens aperture and a single shutter blade. A spring is provided to act upon the shutter blade during the opening and closing of the lens aperture. A driving mechanism sets the spring and automatically releases the shutter blade for reaching the cocked position. In addition, an electronic timing circuit is provided which becomes actuated when the shutter blade reaches the cocked position. The electronic circuit retains the shutter blade in a position corresponding to opening of the lens aperture for an interval corresponding to the exposure time.

3,398,669
IMAGE-COPYING APPARATUS AND METHOD
John W. Hicks, Jr., Fiskdale, Mass., assignor, by mesne assignments, to American Optical Corporation, a corporation of Delaware
Continuation of application Ser. No. 159,198, June 27, 1961. This application Sept. 16, 1964, Ser. No. 398,153
2 Claims. (Cl. 95—73)

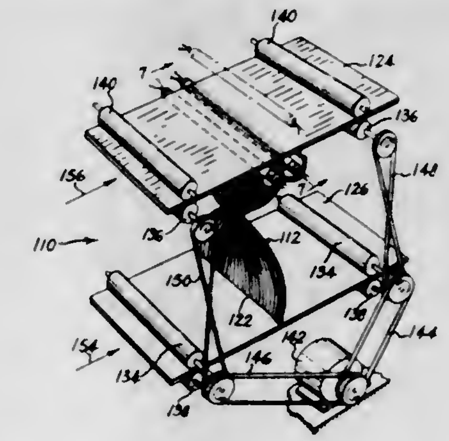

2. The method of making a reproduction of subject matter on an original medium by a continuous optical copying process comprising forming at an image resolving station long and thin line-like images of segments of said subject matter each extending across the entire width thereof and having a thickness dimension no greater than the minimum degree of resolution required of said reproduction, said images each being comprised of a great number of individual image elements disposed in side-by-side relationship with no one dimension thereof being greater than said thickness dimension, transferring said images by reflection of respective image elements thereof individually onto a copy medium at an image-receiving station, causing said images to rotate in their entirety through an angle of substantially 180° during such transference thereof and moving said mediums at said stations both in the same direction across the thickness of said images.

3,398,670
LINE JUSTIFYING DEVICE
Bruce H. Parker, Jr., 15 Woodland Road, Orinda, Calif. 94563
Filed Feb. 11, 1966, Ser. No. 526,840
3 Claims. (Cl. 95—85)

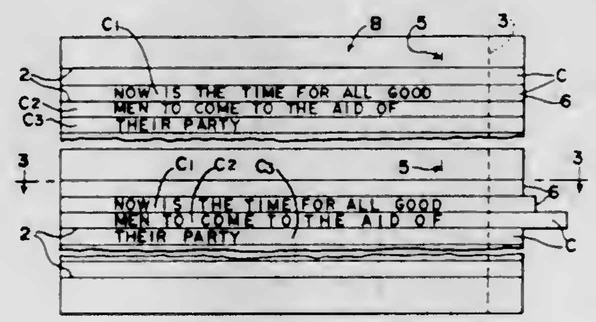

A line justifying device in which a backing sheet has a pressure sensitive adhesive on its front face in order to cause a flexible and stretchable front sheet to adhere to it. The front sheet has a plurality of horizontal and spaced apart slits dividing the sheet into a plurality of rows designed to receive typing. The backing sheet has a vertical cut spaced from the right hand edge for forming a marginal tear strip that may be removed after typing to free the right hand ends of the rows. The justifying of each row is

accomplished by grasping the freed right hand end and peeling a portion of the row from the backing sheet, stretching it to the desired extent and reapplying the row so that it will be held by the adhesive in its stretched condition to form a uniform right hand margin of typing with the other rows.

3,398,671
ROOF VENTILATOR WITH U-SHAPED FLUE CAP
Salvador J. Acosta, San Jose, Calif., assignor to W. A. Call Mfg. Inc., San Jose, Calif., a corporation of California
Filed Oct. 18, 1966, Ser. No. 587,476
10 Claims. (Cl. 98—60)

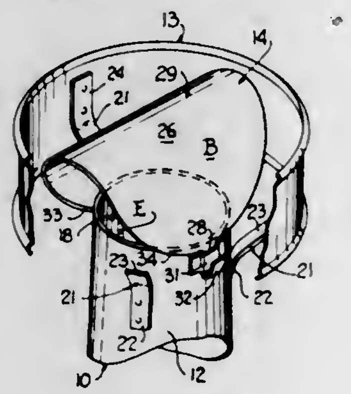

A permanently assembled sleeve and cap roof type ventilator for flue pipes facilitating inspection without detachment of parts. A flip-cap flexible cover for a vent flue mounted within a baffle cap therefor such as to enable partial uncovering of the flue pipe for purposes of inspection and/or cleaning and so coordinated as to guard against cross drafts through the flexible cover and down drafts into the vent flue.

3,398,672
AUTOMATIC DISTRIBUTOR OF FRIED FOODS
Jean Marie M. Hoeberigs, 72 Eeuwfeestlaan, Heist-Duinbergen, Belgium
Filed Feb. 18, 1966, Ser. No. 528,455
Claims priority, application Belgium, Mar. 1, 1965, 660,415
13 Claims. (Cl. 99—407)

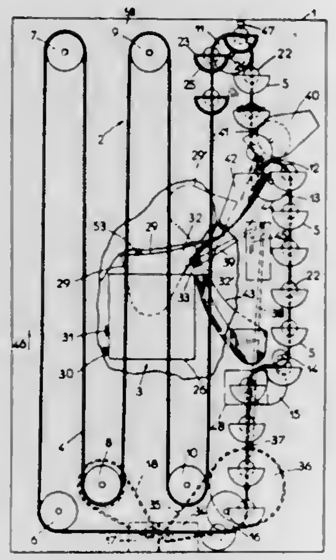

An automatic dispenser for freshly fried foods comprising a conveyor having thereon a plurality of food containers, a cooking cauldron, a ladle and means to transfer the food from the containers to the ladle. The conveyor is mounted adjacent the couldron with the transfer means located generally above the ladle so that the food will fall from the containers to the ladle by gravity. The ladle is pivotally mounted to selectively descend into the cooking cauldron, wherein the food is cooked, and to ascend and invert to pass the cooked food to a dispensing station.

3,398,673
CLARIFIER
Thomas G. Koplock, 3101 Laurel Lane, Cheverly, Md. 20785
Filed Oct. 24, 1965, Ser. No. 504,382
4 Claims. (Cl. 99—408)

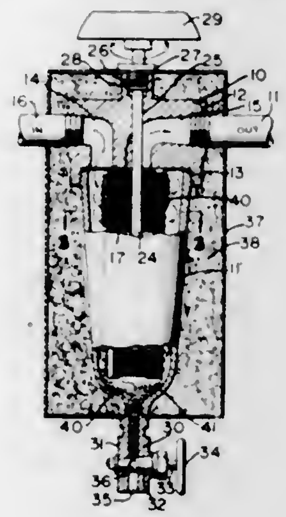

This disclosure has to do with a clarifier particularly adapted for use in conjunction with a cooking vessel utilizing a cooking liquid of the fat and oil class. The clarifier receives the hot cooking liquid from the cooking vessel during the use thereof and continuously removes loose product particles therefrom. A principal feature of the clarifier is that it provides a filter of the type having means for cleaning the same without interrupting the use thereof and the heat of the hot cooking liquid is advantageously utilized to char the removed particles so as to reduce the volume of the removed residue, thereby preventing the clogging of the filter.

3,398,674
SHIELDING FOR BALERS
Phillip G. Venable, Orion, Ill., assignor to J. I. Case Company, Racine, Wis., a corporation of Wisconsin
Filed Dec. 9, 1966, Ser. No. 600,563
3 Claims. (Cl. 100—1)

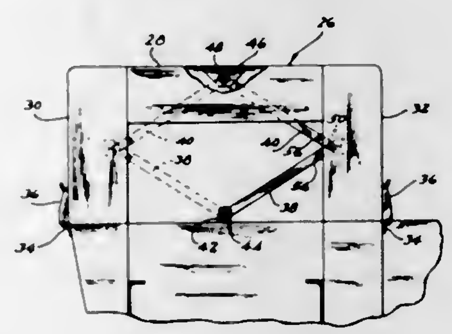

A protective cover for a supporting member, with the cover pivotally mounted on the member for opening from either of two sides. A brace assembly is pivotally connected between the supporting member and the cover, and it can be positioned in an extended manner to hold the cover in an upwardly pivoted position on the support member. Lock means are included on the brace assembly for securing the brace members in extended position, and the brace assembly can be pivotally collapsed in either direction for pivoting the cover downwardly on the supporting member.

3,398,675
PACKAGING MACHINE
Thomas C. Potter, Park Forest, and George H. Burt, Mokena, Ill., assignors to Interlake Steel Corporation, Chicago, Ill., a corporation of New York
Filed Apr. 20, 1966, Ser. No. 543,958
5 Claims. (Cl. 100—7)

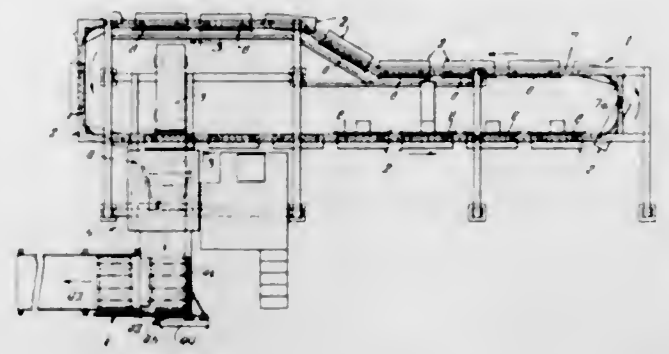

A machine for packaging loose stacks of articles. The stacks are compacted by improved powered compacting means. Improved jig stacking devices are included for minimizing damage to the articles and to the machine.

3,398,676
APPARATUS AND METHOD FOR RENDERING ANIMAL MATERIALS
Harry A. Theobald, 164 Hoyt St., Kearny, N.J. 07032, and Calvin C. Theobald, Kearny, N.J. (P.O. Box 68, Doctor's Inlet, Fla. 32030)
Filed Aug. 20, 1963, Ser. No. 303,384
6 Claims. (Cl. 100—37)

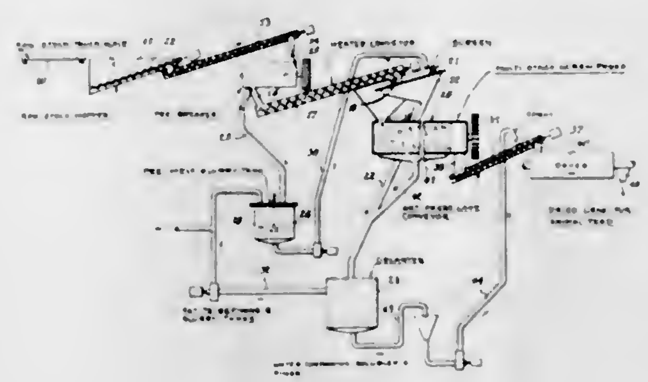

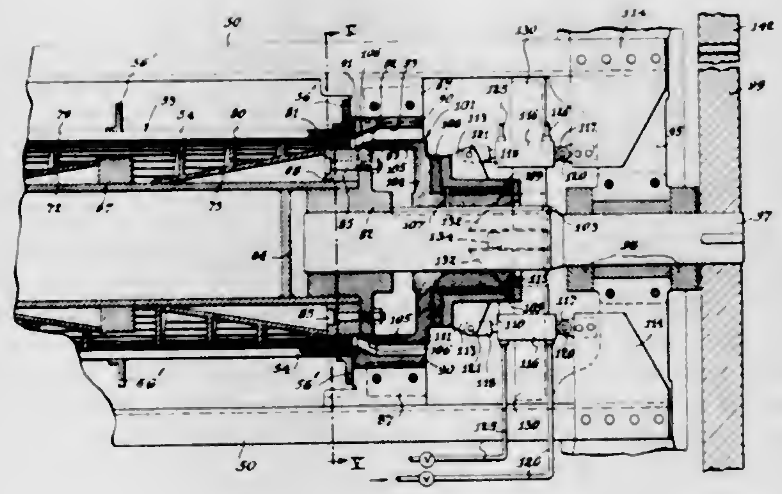

The invention is directed to methods and apparatus for continuously rendering animal material comprising in a continuous operation reducing said material to such size that at least 90% by weight thereof is in pieces of about 2″–½″, then heating said material to a temperature in the range of about 140°–250° F. without reducing the water content thereof by more than 40% by weight of that originally in said material and without reducing the fat content thereof by more than 65% by weight of that originally in said material and then while in said condition subjecting said material to increasing pressures to express molten fat and water therefrom and to provide a residue whose fat content is no greater than 20% by weight thereof on an anhydrous basis, recovering said expressed fat and also recovering said residue.

3,398,677
APPARATUS AND METHODS FOR RENDERING ANIMAL MATERIALS AND PRODUCTS PRODUCED THEREBY
Harry A. Theobald, 36 Stonebridge Road, Montclair, N.J. 07042, and Calvin C. Theobald, Kearny, N.J. (P.O. Box 68, Doctor's Inlet, Fla. 32030)
Continuation-in-part of application Ser. No. 303,384, Aug. 20, 1963. This application Aug. 11, 1966, Ser. No. 571,920
4 Claims. (Cl. 100—37)

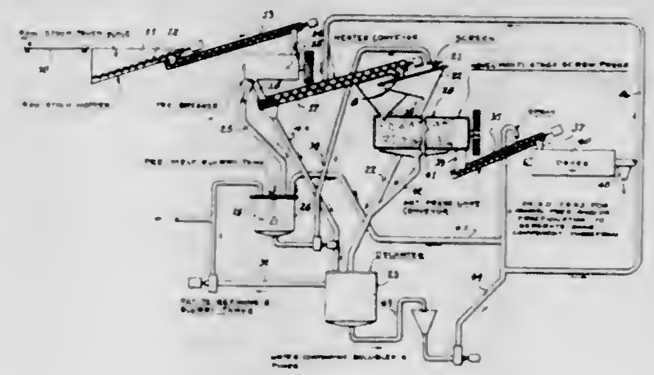

The invention is directed to apparatus and methods for rendering animal materials including bones as part thereof, in a continuous operation from a source of supply by continuously:

(a) reducing said material to such size that at least 70% by weight thereof is passable through a 1½″ mesh screen and retainable on a ¼″ mesh screen; then

(b) heating said material in a range of about 140°–215° F. and maintaining the water content thereof at a level of at least 60% of that originally in said material and the fat content thereof at a level of at least 35% of that originally in said material; then

(c) while in said temperature range and measuring at least 40% by weight of said material after said size reduction and containing fat measuring at least 35% of that originally in said material and water measuring at least 60% and no greater than about 100% of that originally in said material, subjecting said material to increasing pressures in a continuously operating screw press to separate fat and water therefrom until a residue is obtained whose fat content is no greater than about 20% by weight thereof on the dry basis, and separating said bones from the remainder of said residue.

3,398,678
PRINTING CURVED SURFACES
Alexander J. Usko, Wapping, Conn., assignor to Monsanto Company, St. Louis, Mo., a corporation of Delaware
Filed Jan. 3, 1967, Ser. No. 606,712
11 Claims. (Cl. 101—38)

A printing method and apparatus whereby ink is applied onto a portion of the lateral surface of a rotating plate by axially rotating a tapered inking roller in tangential rolling contact with an ink-receiving surface on

the plate and subsequently axially rotating a curved and tapered article of manufacture in tangential rolling con-

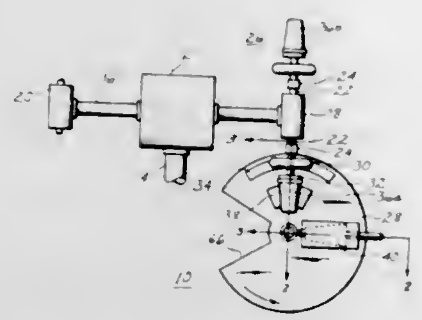

tact with the plate along at least a part of said ink-receiving surface.

3,398,679
PLATEN PRESS
Francis Grivet, Excublens, Vaud, Switzerland, assignor to J. Bobst and Son S.A., Prilly, near Lausanne, Switzerland, a corporation of Switzerland
Filed Apr. 17, 1967, Ser. No. 631,447
Claims priority, application Switzerland, Apr. 15, 1966, 5,653/66
10 Claims. (Cl. 100—53)

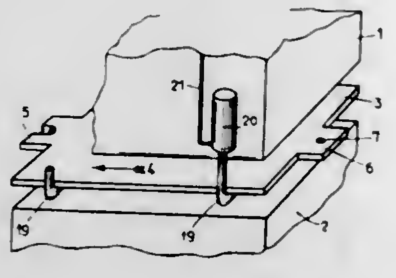

A platen press in which a tool holding frame is introduced between the upper and lower platens of the press and is secured to the upper platen in a predetermined position so as to operate on sheet material fed between the platens. The tool holding frame is centered in said predetermined position by means of an extensible element mounted on the upper platen and received in a hole in the tool holding frame, a member being movable with the extensible element for permitting operation of the press only if the frame is centered and said member does not contact the frame.

ERRATUM

For Class 101—38 see:
Patent No. 3,398,678

3,398,680
DUPLEX ROTARY SCREEN PRINTING MACHINE
Donald Moskowitz, Long Beach, N.Y., assignor to Roto-Print Machinery Corporation, New York, N.Y., a corporation of New York
Filed Mar. 23, 1967, Ser. No. 625,484
7 Claims. (Cl. 101—115)

The disclosure sets forth a duplex rotary screen printing machine designed to print heavy fabrics simultaneously on both sides thereof so that the same design will be applied to opposite sides and will penetrate to the median plane of the fabric. Drapery fabrics, towelling or other heavy fabrics so printed will have two finished imprinted sides which will be produced by one pass through the

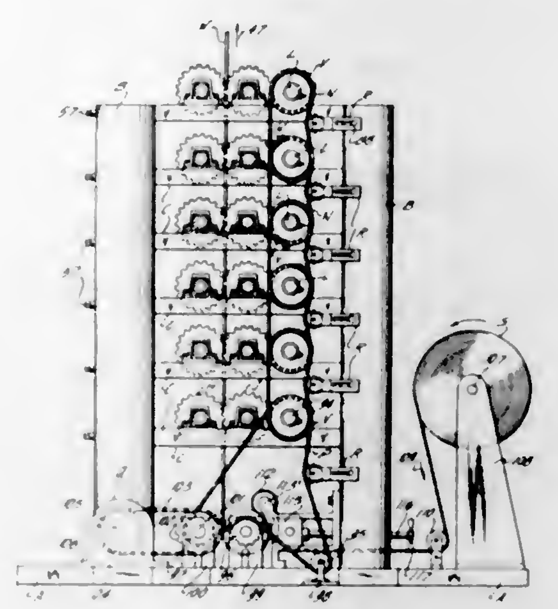

machine, with the design penetrating substantially through the entire fabric in registry from both sides.

3,398,681
MECHANISM FOR DRIVING THE PLATE AND IMPRESSION CYLINDERS OF A PRINTING PRESS
Minoru Hirose, Itami, Japan, assignor to Hamada Printing Press Mfg. Co., Ltd., Osaka, Japan
Filed Nov. 23, 1965, Ser. No. 509,360
Claims priority, application Japan, Aug. 26, 1965, 40/70,431
2 Claims. (Cl. 101—216)

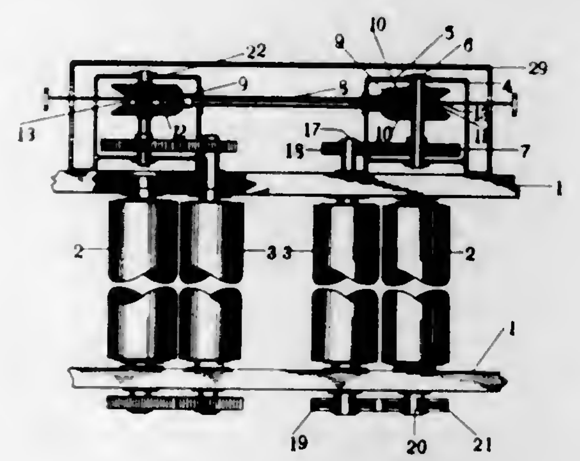

A drive mechanism for driving the plate and impression cylinders of a printing press. A vertical drive shaft extends upwardly from the base of the printing press along the front side of one leg of the front frame and has a bevel gear on the upper end thereof meshing with a first pair of bevel gears mounted on a short splined auxiliary shaft contained in a drive housing projecting forwardly from the front frame. The auxiliary shaft has a helical gear on the end thereof geared to a corresponding gear on the first impression cylinder shaft, and a clutch is positioned between the bevel gears. A horizontal connecting shaft extends between the first pair of bevel gears and a second pair of bevel gears and has gears thereon meshing with said pairs of gears. The clutch slides back and forth on the splined shaft under the action of a lever coupled thereto and operated from outside of the housing.

3,398,682
SPINNING PROJECTILE
Michael F. Abela, 12987 Pleasant Valley Road, Parma, Ohio 44129
Filed Sept. 14, 1966, Ser. No. 579,359
6 Claims. (Cl. 102—38)

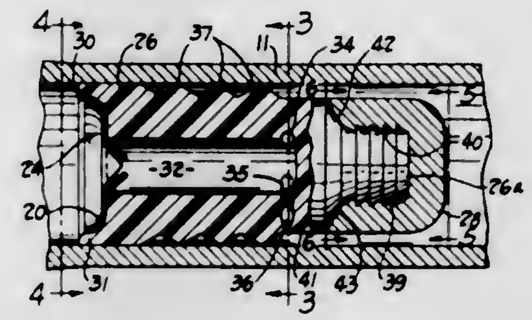

A shotgun shell comprised of a sleeve; a propellant within the sleeve; a destructible wad; and, forward thereof, a two-part projectile having between its ends a massive plastic body portion with encircling ridges for minimizing external blow-by and a serrated leading end to which is coupled a metal nose portion with a rearwardly facing recess for receiving said serrated leading end.

3,398,683
BLANK CARTRIDGE
Walter Gähle, Unterluss-Hohenrieth, Germany, assignor to Firma Rheinmetall G.m.b.H., Dusseldorf, Germany
Filed May 6, 1966, Ser. No. 548,277
Claims priority, application Germany, May 8, 1965, R 40,579
1 Claim. (Cl. 102—39)

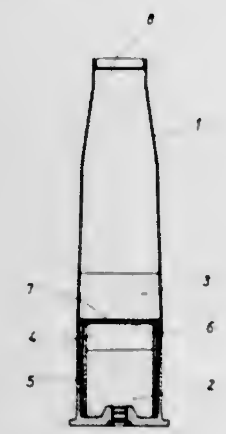

A blank cartridge having a cartridge case containing a powder charge and a tamping plug spaced from the charge and secured to the cartridge case. Also the cartridge case has a hollow container forming a combustion space between the charge and the plug and composed of a synthetic material of low inflammability which disintegrates when the cartridge is fired. A closure for the container is provided between the space in the hollow container and a disk is also provided adjacent the closure and the tamping plug.

3,398,684
CASELESS CARTRIDGES
Robert Carl Kvavle, Hillsboro, Oreg., assignor to United Shoe Machinery Corporation, Flemington, N.J., a corporation of New Jersey
Filed June 28, 1966, Ser. No. 561,253
4 Claims. (Cl. 102—49.3)

A projectile houses in its rear end a propellant charge comprised primarily of solid low explosive preferably in the form of nitrocellulose fibres having air in their substantially interconnected interstitial spaces, the charge having a density less than that of nitrocellulose per se. While ignition may be effected electrically or otherwise, one mode of ignition contemplated for the cartridge is

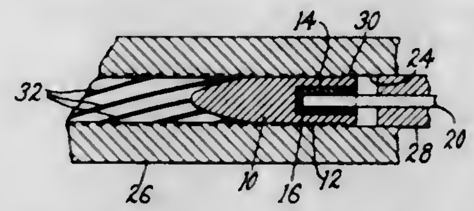

that effected by impact with the charge in a substantially closed chamber sealed by the projectile.

3,398,685
ION DRAG PUMPS
Otmar M. Stuetzer, Hopkins, Minn., assignor, by mesne assignments, to Litton Systems, Inc., Beverly Hills, Calif., a corporation of Maryland
Continuation-in-part of application Ser. No. 795,996, Feb. 27, 1959. This application Sept. 11, 1961, Ser. No. 137,086
10 Claims. (Cl. 103—1)

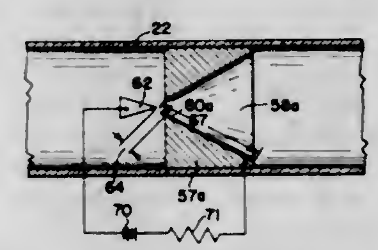

1. Apparatus for continuously pumping an insulating liquid comprising an elongated tubular shaped housing, a solid cold emitter electrode positioned in said housing, a collector electrode spaced downstream from said emitter electrode a distance no greater than the largest internal cross-sectional dimension of said housing, flow constricting means in said housing forming a constricted opening adjacent the downstream end of said emitter electrode, said means defining a flow path which is divergent from said constricted opening in the downstream direction therefrom, and means connected between said electrodes to establish ionization and a high field strength in the liquid between said electrodes and between the ends of said divergent flow path.

3,398,686
LIQUID SHOCK MOTOR AND PUMPING DEVICE
Joel B. Guin, 148 E. 48th St., New York, N.Y. 10017
Filed May 13, 1966, Ser. No. 549,875
4 Claims. (Cl. 103—1)

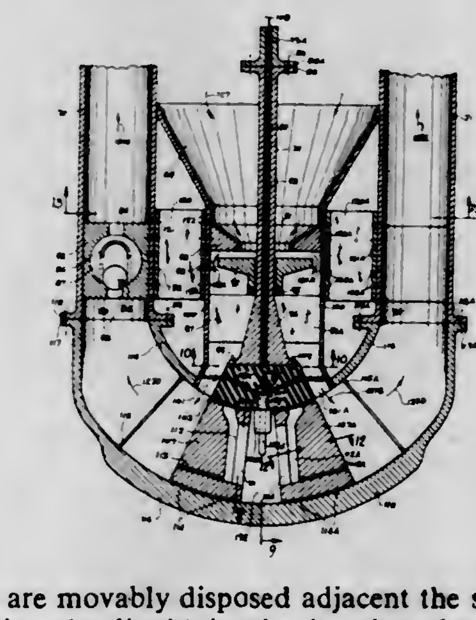

Pistons are movably disposed adjacent the shock chamber to drive the liquid in the housing through outlets

leading therefrom when the vaporization of liquid in the shock chamber forces the pistons outward. Each piston is penetrated by channels that let cool liquid into the shock chamber to condense the vapor formed therein after each spark discharge.

Secondary condensing channels lead from the main liquid channel into the shock chamber to expedite the condensation therein by letting in cool liquid immediately after each spark discharge.

One-way check valves are located across the inlet channels into the shock chamber to prevent back-flow during the spark discharge. One-way ball valves are located across the outlet channels from the shock chamber to prevent back-flow before and after the spark discharge.

Means are included for joining electrodes into a string by flexible electrically conductive connecting means. Each of two such strings are held by an electrode channel of insulating material. The two channels hold the bottom electrodes of the two strings in accurate position to form a spark gap. New electrodes thus are available as soon as the bottom one is consumed.

3,398,687
PUMP DEVICE
Yutaka Yoshikawa, 24 2-chome, Hatsudai, Shibuya-ku, Tokyo, Japan
Continuation of application Ser. No. 570,377, Aug. 4, 1966, which is a continuation of application Ser. No. 356,145, Mar. 31, 1964. This application June 1, 1967, Ser. No. 642,973
Claims priority, application Japan, Apr. 6, 1963, 38/18,434
2 Claims. (Cl. 103—5)

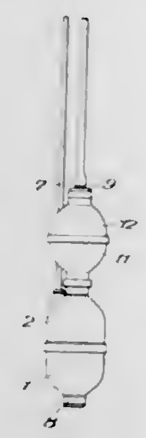

1. A submersible water pump comprising a first outer housing having an outlet at its top and an inlet at its bottom; a second outer housing having an outlet at its top and an inlet at its bottom connected directly to said outlet of said first housing in axial alignment therewith; a first water-tight inner housing enclosed within said first outer housing; a second water-tight inner housing enclosed within said second outer housing; guide vane means rigidly connecting each inner housing to its associated outer housing in spaced relationship, said guide vane means being shaped to permit the free flow of water from the inlet to the outlet of each of said outer housings around the outside of each inner housing, the inside of said first outer housing being shaped at its bottom portion to provide an upwardly and outwardly divergent generally frusto-conical recess; an axially fixed generally frusto-conically shaped impeller freely revolvably disposed in said frusto-conical recess, the blades of said impeller being spaced radially outwardly of its associated inlet; vertical drive shaft means extending through at least one of said inner housings; an electric motor disposed in said one of said inner housings, the rotor shaft of said motor being included in said drive shaft means, said motor being cooled by the flow of water around the inner housing in which it is disposed; and a battery disposed within the other of said inner housings, said battery being connected to energize said motor.

3,398,688
APPARATUS FOR MAKING KNOP YARN
Eugene Colombu, Paris, France, and Alfred Rufer and André Zumstein, Emmenbrucke, Lucerne, Switzerland, assignors to Chimiotex S.A., Geneva, Switzerland, a corporation of Switzerland
Filed Nov. 16, 1964, Ser. No. 411,395
Claims priority, application Switzerland, Nov. 18, 1963, 14,096/63
3 Claims. (Cl. 103—11)

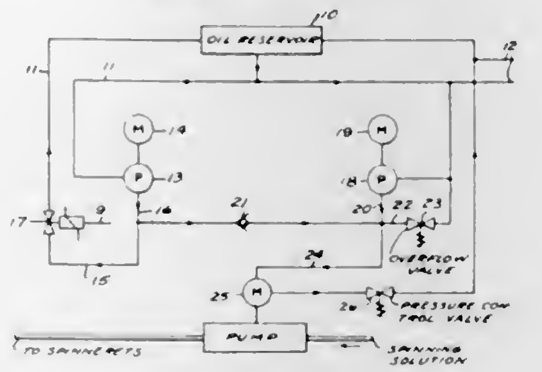

An apparatus for producing knop yarn wherein such apparatus comprises a pump adapted to supply the spinning solution for producing said yarn, a hydraulic motor connected to drive said pump and two pumps supplying fluid to said motor. A by-pass valve for one of the two pumps is controlled in response signals from a traveling photographic film. The volume of fluid by-passed varies the quantity of fluid supplies to the motor which in turn varies the rate of pumping of the first mentioned pump.

3,398,689
APPARATUS PROVIDING A CONSTANT-RATE TWO-COMPONENT FLOW STREAM
Robert W. Allington, Lincoln, Nebr., assignor to Instrumentation Specialties Company, Lincoln, Nebr., a corporation of Nebraska
Filed Jan. 5, 1966, Ser. No. 518,891
7 Claims. (Cl. 103—11)

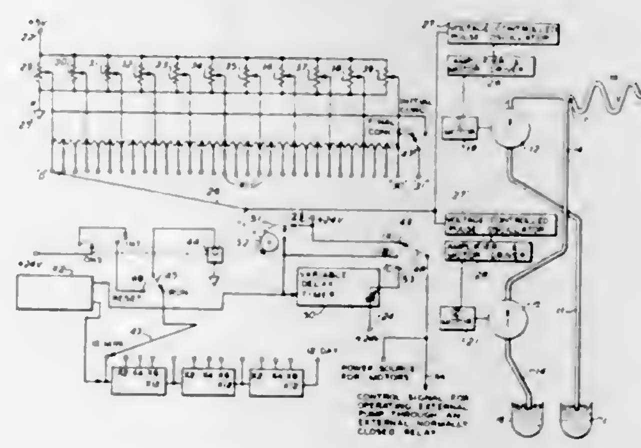

Apparatus is described for providing a constant-rate flow stream made up of two components, for use in metering liquid flow streams into columns for liquid chromatography or for preparing density-gradients for density gradient centrifugation, among other purposes, which includes two positive displacement pumps, each operated by a separate electric motor, each motor in turn operated by control means sensitive to a control signal. The control means for one pump and motor for pumping the first component being operated at maximum speed when the control signal reaches a maximum value, at zero speed when the control signal is at a zero value; and at intermediate speeds at intermediate values of the control signal in a substantially linear relationship. The other control means, drive motor and pump, conversely, being operable to produce a zero flow rate at a maximum level of the control signal, and at a maximum rate, equal to that of the first pump, when the control signal is at a zero value. The control signal is derived by means of a programming mechanism consisting of a plurality of potentiometers operated by a stepping switch and a variable rate pulse generator.

3,398,690
WELL PUMPING SYSTEM AND RELATED CONTROL
Clair N. Deaton, P.O. Box 102, Byron, Wyo. 82412
Filed Aug. 30, 1966, Ser. No. 576,131
6 Claims. (Cl. 103—25)

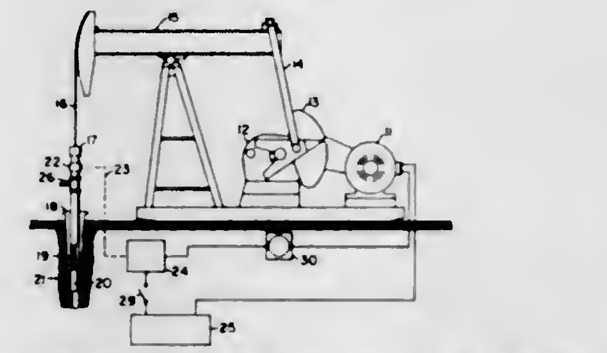

A control system for well pumping units having external power means connected by a polish rod to a well pump. Temperature sensing means in a stuffing box control the external power means in response to the heat generated by the polish rod.

3,398,691
CONTROLLED VOLUME PUMPS
Ryuichi Sato, Masaharu Ikeya, Isamu Takeishi, and Izumi Miyauchi, Tokyo, Japan, assignors to Nippon Kikai Keiso Kaisha, Ltd., Tokyo, Japan
Filed Feb. 8, 1966, Ser. No. 525,914
10 Claims. (Cl. 103—38)

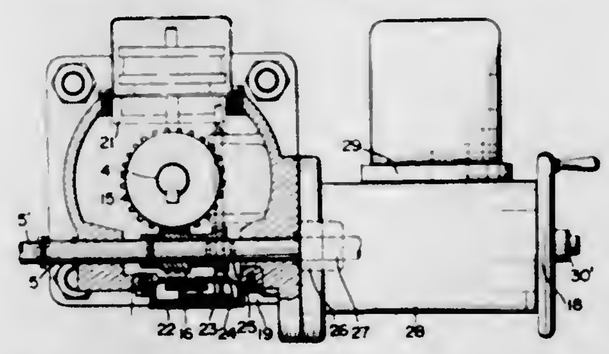

A controlled volume pump having a stroke adjusting mechanism provided between the driving means and the driven member including an eccentric shaft, a cam secured thereto and connected to said driven member, an adjusting member connected at one end to the eccentric shaft through a bearing to displace said eccentric shaft along the axis thereof, and adjusting means connected to the other end of said adjusting member for actuation thereof.

3,398,692
FUEL HEATING APPARATUS
Alfred M. Suggs, Indianapolis, Ind., assignor to General Motors Corporation, Detroit, Mich., a corporation of Delaware
Filed Oct. 5, 1959, Ser. No. 844,336
6 Claims. (Cl. 103—42)

1. A combustion system comprising, in combination, a source of fuel under pressure, a fuel control and a fuel burner connected in series in the order named for controlled supply of fuel from the source to the burner for combustion therein, the system including means interposed between the source and the control effective to throttle the fuel and thereby cause an increase in tem-

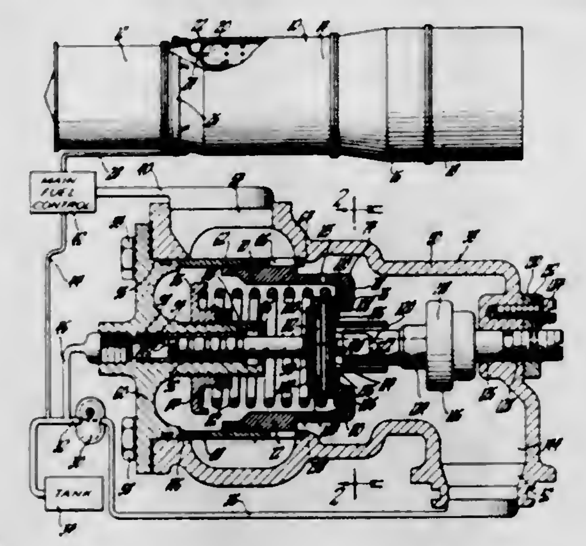

perature thereof, and a device responsive to the temperature of the fuel flowing through the said means coupled to the throttling means so as to open the throttling means as fuel temperature rises above a predetermined datum value.

3,398,693
CONCRETE PUMPING APPARATUS
Kurt E. Schumann, Milwaukee, Wis., assignor to Danken, Inc., Hartland, Wis., a corporation of Wisconsin
Filed Aug. 1, 1966, Ser. No. 569,264
14 Claims. (Cl. 103—49)

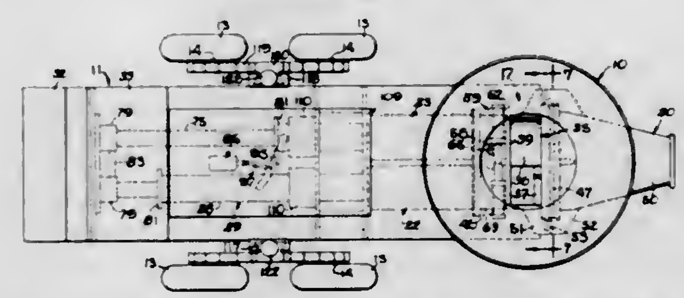

A concrete pumping apparatus includes a pair of side-by-side pumps which reciprocate in unison but in opposite directions so that one pump sucks a charge of fluent concrete from a hopper while the other pump forces a previously received charge into a delivery pipe. A valve for controlling the flow of concrete to and from the pumps is formed with a first closure oscillating back and forth beneath the hopper to establish communication between the latter and alternate ones of the pumps. The valve also includes a second closure swinging in a plane perpendicular to the first closure for establishing communication between alternate ones of the pumps and the delivery pipe, the arrangement of the two closures being such that one pump always communicates with and receives concrete from the hopper while the other pump is communicating with and feeding concrete into the delivery pipe.

3,398,694
SUBMERSIBLE PUMP DEVICE FOR NET BRAILING
David W. Lerch, Iquique, Chile, assignor to Marine Construction & Design Co., Seattle, Wash., a corporation of Washington
Filed Aug. 11, 1966, Ser. No. 571,777
15 Claims. (Cl. 103—87)

High-capacity heat exchange means for the encapsulated hydraulic drive motor of a submersible liquid or liquid-solids pump are provided by encasing the motor unit in a heat exchange pod situated in the pump passage and defining a hydraulic fluid space surrounding the motor.

Pressurized hydraulic liquid from the motor discharges into this space for cooling through the pod wall before flowing in the return conduit to the hydraulic pressure source. In the illustrative embodiment, flow-directing vanes mounted on the pod's exterior downstream from the pump serve in a multiple capacity, providing added

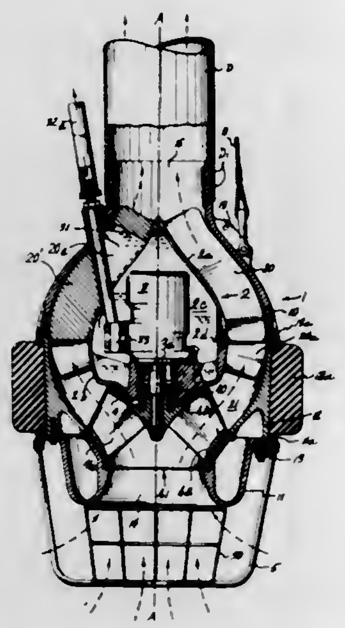

heat-exchange surface area, serving to convert kinetic energy of the pumped liquid into axially directed pressure and flow, and as shield or housing for the reach of coaxial hydraulic supply and return lines extending across the pumped liquid passage. Other configurational features also appear in the illustrative embodiment.

3,398,695
ELECTRIC MOTOR DRIVEN PUMP
Peter G. Pritz, Jenkintown, Pa. (% Trico Non Ferrous Metal Products Inc., Wyandotte Road, Willow Grove, Pa. 19090)
Filed Jan. 24, 1967, Ser. No. 611,328
5 Claims. (Cl. 103—87)

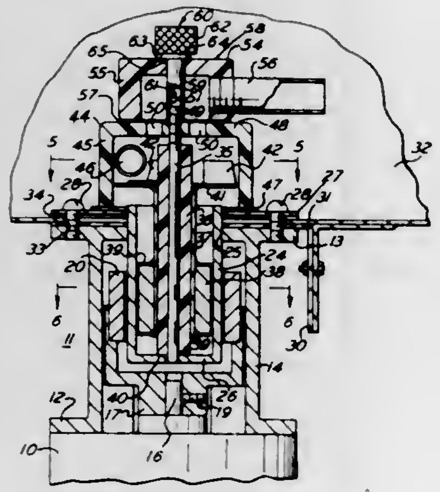

An electric motor driven pump with magnetic clutch isolating the motor from the pump, the pump having a rotatably adjustable inlet connection and a rotatably adjustable and removable outlet connection.

3,398,696
ROTARY HYDRAULIC MACHINES
Robert S. Sproule, Montreal, Quebec, Canada, assignor to Dominion Engineering Works, Limited, Lachine, Quebec, Canada, a corporation of Canada
Filed June 6, 1966, Ser. No. 555,582
2 Claims. (Cl. 103—103)

The shroud space of a turbomachine such as a Francis turbine has sealing liquid containing a drag reducing additive such as poly(ethylene-oxide) introduced therein. The shroud space may be aerated, in which case the

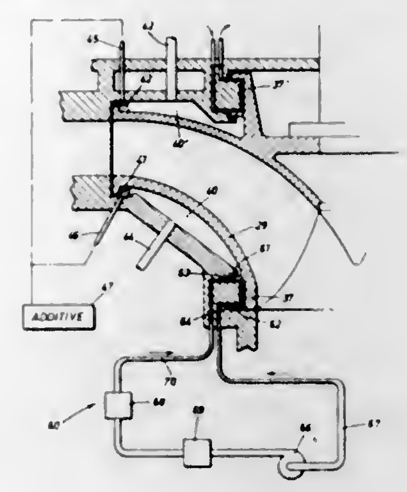

liquid with additive is restricted to one or more sealing zones bounding the aerated shroud space adjacent the shroud edges.

3,398,697
MOLTEN METAL PUMP
Robert R. Rader, Port Huron, Mich., assignor to Wirtz Manufacturing Co., Inc., Port Huron, Mich., a corporation of Michigan
Filed Oct. 25, 1966, Ser. No. 589,256
18 Claims. (Cl. 103—158)

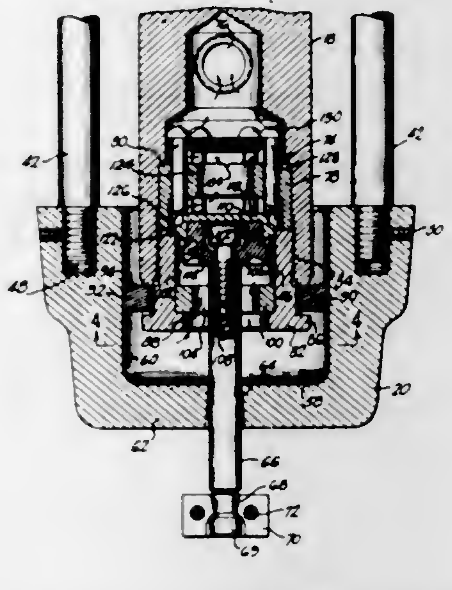

1. A pump adapted to be immersed in a bath of molten material for pumping the material from the bath to a remote delivery point comprising a pump body, means for supporting the pump body in fixed position with an end portion thereof submerged in a bath of molten material, a cup member telescopically arranged with said end portion of the pump body and adapted to form a pump chamber therewith, means for reciprocating said cup member axially to increase the effective size of said pump chamber when the cup member is shifted axially in one direction and to decrease the effective size of the pump chamber when the cup member is shifted axially in the opposite direction, an inlet passageway extending to said pump chamber from exteriorly of the cup member, valve means controlling said inlet passageway and responsive to travel of the cup in said one direction to admit material from the bath in which the pump is immersed to said pump chamber and to prevent discharge of material from said pump chamber through said inlet passageway when the cup member is moved in the opposite direction, a discharge passageway in said pump body communicating at one end with said pump chamber, a discharge valve controlling said discharge passageway and means mechanically interconnecting said discharge valve with said cup member so that the discharge valve is actuated by said cup member to a position closing said discharge passageway when the cup member is shifted axially to the end of its stroke in said one direction, said interconnecting means permitting the discharge valve to shift to a position opening said discharge passageway when the cup member is shifted in said opposite position.

3,398,698
ROTARY RADIAL PISTON MACHINE WITH FLUID FLOW SUPPLY IN SUBSTANTIAL AXIAL DIRECTION
Karl Eickmann, 2420 Isshiki Hayama-machi, Kanagawa-ken, Japan
Filed June 4, 1965, Ser. No. 461,483
Claims priority, application Switzerland, June 11, 1964, 7,664/64, 7,665/64; July 10, 1964, 9,137/64
5 Claims. (Cl. 103—161)

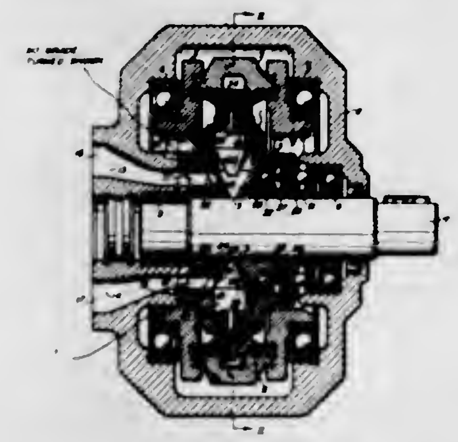

A rotary fluid-handling machine which can be operated either as a motor or a pump, and having a rotor provided with radial pistons and cylinders, and wherein the working fluid passes to and from the rotor through axially facing control ports provided on the rotor which pass into alignment with matching control ports on a body which is stationary with respect to the rotor, the rotor and such stationary body being disposed for limited relative movement to maintain minimum operating clearance therebetween to reduce fluid leakage.

3,398,699
RECIPROCATING FLUID DISPLACEMENT DEVICE
Frank Henry Stark, Derby, England, assignor to Rolls-Royce Limited, Derby, England, a British company
Filed Jan. 5, 1966, Ser. No. 518,957
Claims priority, application Great Britain, Jan. 28, 1965, 3,771/65
9 Claims. (Cl. 103—173)

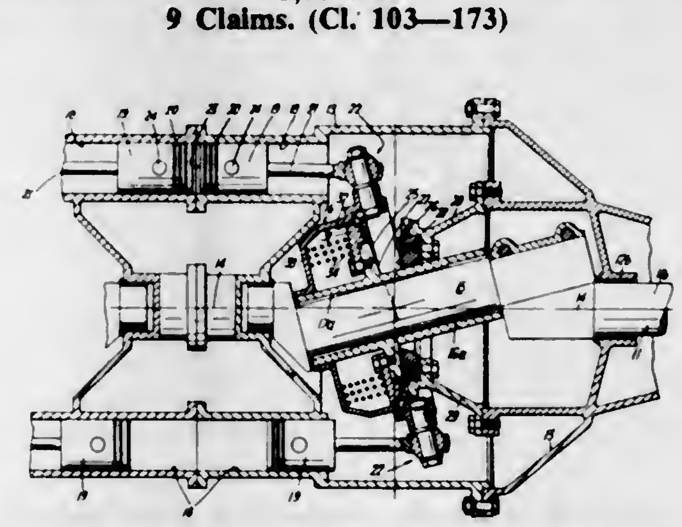

The disclosure of this invention pertains to an apparatus operative as either an engine or as a pump in which a wobble plate arrangement actuates pistons which reciprocate in cylinders to move fluid therein.

3,398,700
RAILWAY TRUCK WITH FLEXIBLY JOINTED AND RIGIDLY MOUNTED TRANSOMS
Arthur F. Baker, Mountain Home, Ark., assignor to Amsted Industries Incorporated, Chicago, Ill., a corporation of New Jersey
Continuation-in-part of abandoned application Ser. No. 417,930, Dec. 14, 1964. This application Mar. 2, 1967, Ser. No. 656,605
3 Claims. (Cl. 105—182)

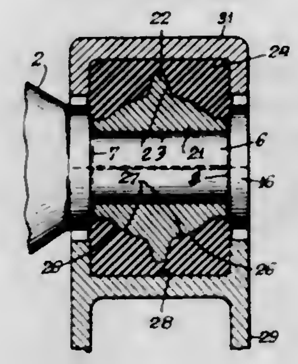

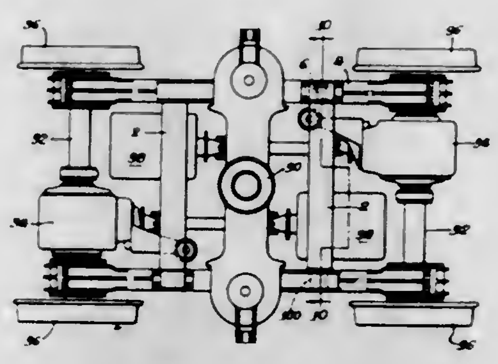

This invention embodies a flexible joint for a rapid transit truck transom, which transom is rigidly mounted to one side frame of the truck and flexibly mounted to the other side frame. The transom is provided with a cylindrical end portion. A metallic bushing is mounted on the cylindrical end portion and a ring of resilient material is engaged between the bushing and the side frame.

3,398,701
DEVICE FOR FORMING CRESCENT ROLLS AND SIMILAR BAKED GOODS
Rudolf Elgner, Markt Einersheim, Germany, assignor to A. Fritsch KG., Markt Einersheim, Germany, a company of Germany
Filed June 6, 1966, Ser. No. 555,331
Claims priority, application Germany, June 30, 1965, F 28,326
9 Claims. (Cl. 107—9)

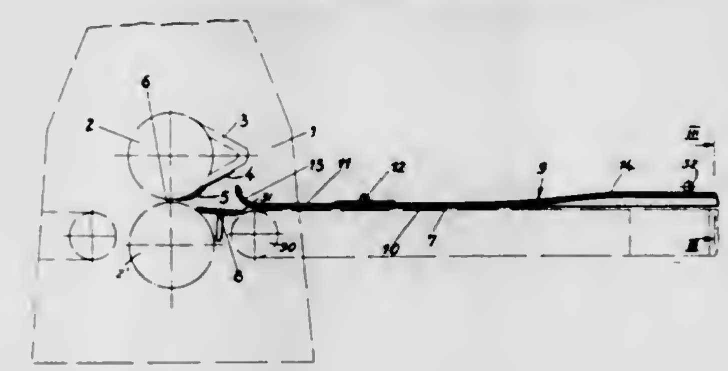

There is disclosed a dough-working device for first rolling out dough in the form of a layer and then tightly rolling up the layer to bake crescent rolls therefrom. The device comprises two coacting pressure rollers between which the piece of dough is rolled out to form a layer

therefrom. The dough layer emerging from the rolling gap between the two rollers is then guided between a conveyor traveling along a straight path and a rigid rolling strip mounted above the conveyor generally parallel thereto and spaced apart therefrom whereby the layer of dough is first folded over and then tightly rolled up. The lengthwise midportion of the rolling strip is preferably concavely curved in crosswise direction to enlarge the cross-section of the mid portion of the rolled up dough.

3,398,702
EXTRUDING APPARATUS
Walter W. Behr, Great Neck, N.Y., assignor to American Machine & Foundry Company, a corporation of New Jersey
Filed Feb. 14, 1966, Ser. No. 527,363
3 Claims. (Cl. 107—15)

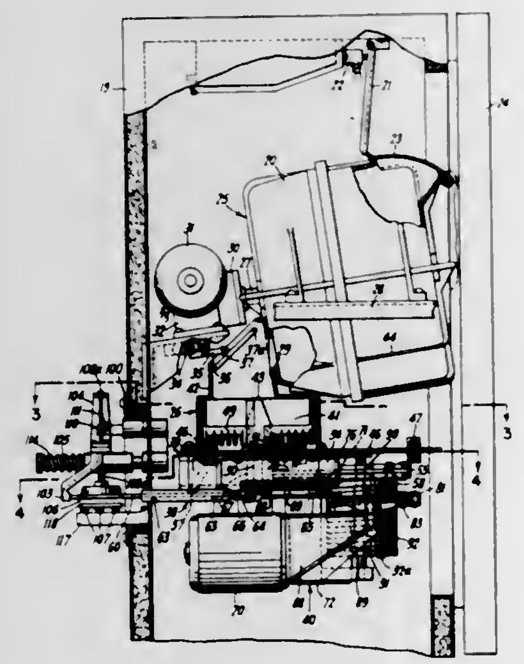

A knock-out device for discharging patties from a patty-forming mechanism. A reciprocating carriage supports a reciprocable plunger carrying a knock-out cup and is advanced from a retracted position to a position wherein the plunger is extended to discharge the patty by knock-out cup.

3,398,703
CONTAINER PALLET AND METHOD OF ATTACHING
John J. Mezzano, Mount Prospect, Ill., assignor to Union Camp Corporation, New York, N.Y., a corporation of Virginia
Filed Aug. 31, 1967, Ser. No. 664,694
4 Claims. (Cl. 108—51)

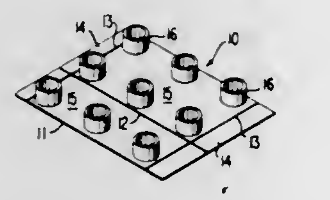

A pallet for supporting a container having opposing closure flaps, the pallet having a base and retaining flaps on opposite sides of the base, the space between the retaining flaps and the base being sufficient to receive the opposing flaps of the container. Supporting members of a height sufficient to receive the forks of a lift truck are secured to the opposite face of the base. A score line intersects the base and the retaining flaps, enabling the entire pallet to be folded to allow the container flaps to be inserted into and removed from between the retaining flaps and the adjacent face of the base. The pallet can be attached to the container without other securing means and locks the flaps of the container in position without other securing means for the flaps.

3,398,704
SYSTEMS OF RETRACTION OF FOLDING ELEMENTS IN PIECES OF FURNITURE, ESPECIALLY IN TABLES
Pascual José María Oscoz Sanchez, Ibanez de Bilbao 6, Bilbao, Spain
Filed Oct. 26, 1966, Ser. No. 589,770
Claims priority, application Spain, Sept. 21, 1966, 331,454
4 Claims. (Cl. 108—79)

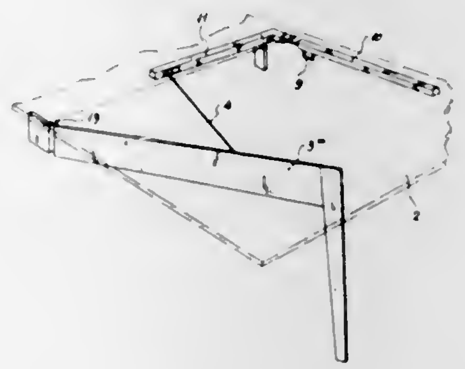

A concealed guide and cable arrangement for a folding top table for retracting the supporting leg structure for the foldable top portion. The operating mechanism is located in a guide fastened to the under surface of the folding top along one side edge thereof so as to be concealed but easily accessible.

3,398,705
METHOD OF BURNING COMBUSTIBLE SCUM
Bernard E. Brennan, 213 E. Battell St., Mishawaka, Ind. 46544
Continuation-in-part of application Ser. No. 495,871, Oct. 14, 1965. This application Dec. 1, 1967, Ser. No. 687,310
11 Claims. (Cl. 110—8)

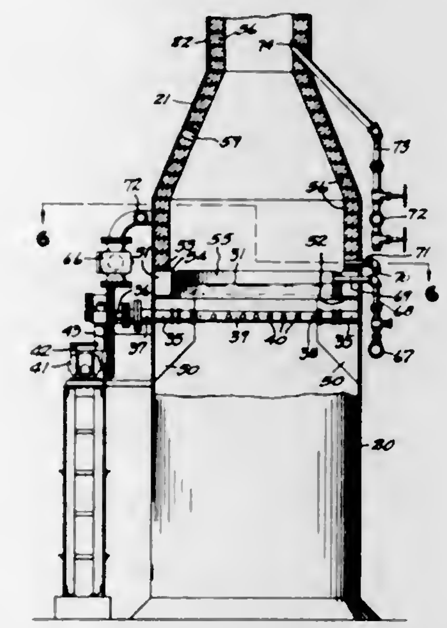

A method of burning combustible scum wherein the scum is collected upon the surface of liquid in a container through which water flows and in which a selected liquid level is maintained. The collected scum is ignited and burns in the liquid surface in a combustion chamber of the container while jets of air under pressure are discharged across the combustion chamber slightly above the liquid level and also into an outlet stack and while air at low pressure is discharged into the chamber at a low level and around the margin of the combustion chamber. The scum is pierced and agitated periodically at slightly spaced points as combustion occurs.

3,398,706
SOIL STERILIZER APPARATUS
Howard J. Ruetenik, Box 5, Green Valley, Ariz. 85614
Continuation-in-part of application Ser. No. 556,375, June 9, 1966. This application Sept. 28, 1967, Ser. No. 671,392,
4 Claims. (Cl. 111—7)

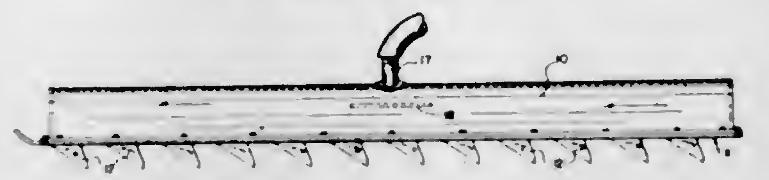

A soil sterilizing device is provided with a flat plate adapted to slide in a path over the surface of the soil in contact with the soil over substantially the entire under surface of the plate. A plurality of furrowing blades are rigidly secured to the plate and extend downwardly therefrom into the soil. These blades are spaced laterally across the plate normal to the path of travel of the sterilizer in a plurality of lateral rows. These lateral rows are spaced longitudinally of the plate in the direction of the path of travel. Immediately behind each furrow blade is a jet forming means in the plate, together with means for supplying a stream of sterilizing material under pressure to this jet forming means at each blade location, the preferred sterilizing material being mentioned as steam. A preferred arrangement of the furrowing blades is to have those in each lateral row staggered laterally relative to the blades in the rows ahead of and behind it. This results in a large number of parallel furrows being treated by one passage of the sterilizer device so that the entire area is evenly treated with steam which is held trapped in the soil by the plate until the plate has passed entirely over the spot.

3,398,707
APPARATUS FOR WORKING, TREATING AND PLANTING SOIL
Robert W. McClenny, P.O. Box 1206, Suffolk, Va. 23434
Continuation of abandoned application Ser. No. 378,388, June 26, 1964. This application Aug. 12, 1966, Ser. No. 572,139
1 Claim. (Cl. 111—85)

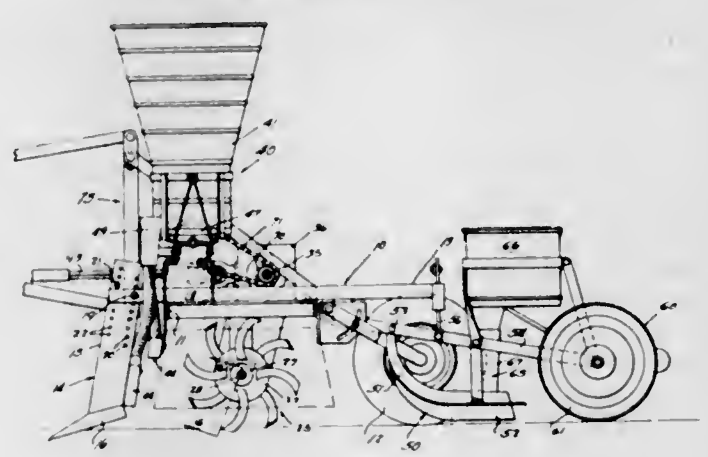

An attachment for furrowing, fertilizing, cultivating and planting on a single pass, said attachment having a main frame on which are mounted, from front to back, plows, fertilizer delivery means, and rotary cultivator means; said frame having a three-point hitch for connection of the main frame to a tractor; a drive system on said main frame for said fertilizer delivery means and said rotary cultivator means with a connection to the power take-off of said tractor; an auxiliary frame pivotally mounted on the rear of said main frame with furrowing, planting and seed covering means mounted on said auxiliary frame.

3,398,708
NEEDLE PLATE FOR TUFTING MACHINE
Roy T. Card, Chattanooga, Tenn., assignor to Lewis Card & Co., Inc., Chattanooga, Tenn., a corporation of Tennessee
Filed Mar. 17, 1967, Ser. No. 624,084
7 Claims. (Cl. 112—79)

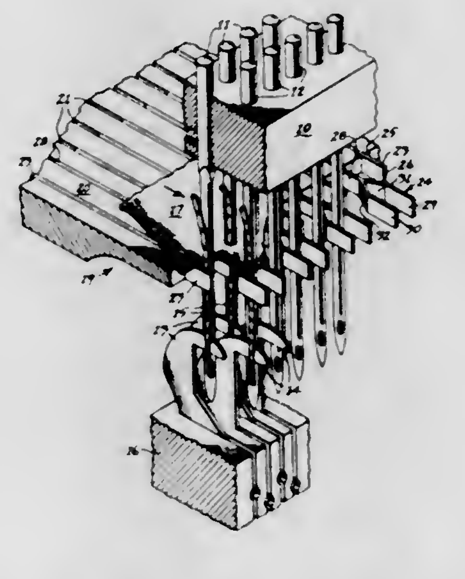

A needle plate for a narrow gauge tufting machine including two rows of staggered needles having one set of short fingers and another set of longer, forked fingers alternating with the short fingers, all of the fingers projecting between the needles in one row and the forked fingers having tines also projecting between the needles in the other row.

3,398,709
MACHINE FOR OVERCAST SEWING
Alphonse De Koninck, 84 Ave. Sleeckx, Brussels 3, Belgium
Filed Sept. 11, 1964, Ser. No. 395,817
Claims priority, application Belgium, Jan. 31, 1964, 643,240
11 Claims. (Cl. 112—162)

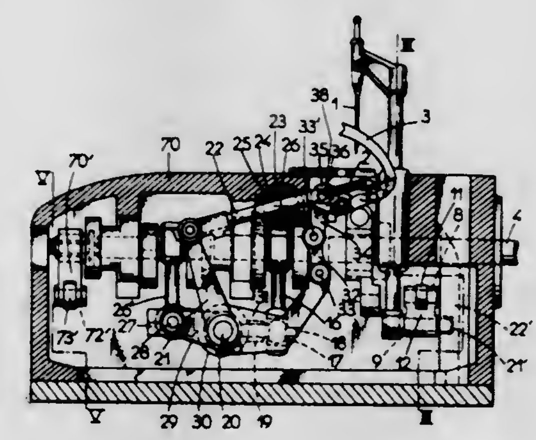

A machine for overcast sewing having a straight needle and two hooks, at least one of which can be threaded. The needle and hooks are driven by a crankshaft via

connecting rods, both the rods and crankshaft being disposed in a gearcase. A feed dog and knife means are operatively connected to be driven by the crankshaft. A pressing pedal, thread guides, thread distributors and a reciprocating needle bar are also mounted on the gearcase. The case has an integral bushing with the bar sliding therein so that, when the needle is in its lower position, a greater portion of the bar is within the gearcase to be lubricated by aspersion of oil contained in the gearcase.

3,398,710
LOCK STITCH SEWING MACHINE THREAD CASE
George R. Eckhardt, Fords-Edison Township, N.J., assignor to Coats & Clark Inc., New York, N.Y., a corporation of Delaware
Filed Sept. 1, 1966, Ser. No. 576,668
5 Claims. (Cl. 112—231)

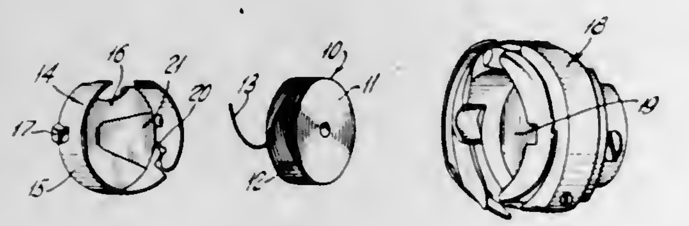

A thread case for center-unwind cops, said thread case having a groove in the end wall placed to allow clearance for the free passage of thread betwen said end wall and the end of the cop.

3,398,711
EAR CONTACTING AND LIFTING MECHANISM
Raymond A. Heisler, 657 Dakota Trail, Franklin Lakes, N.J. 07417
Filed July 5, 1966, Ser. No. 562,680
14 Claims. (Cl. 113—1)

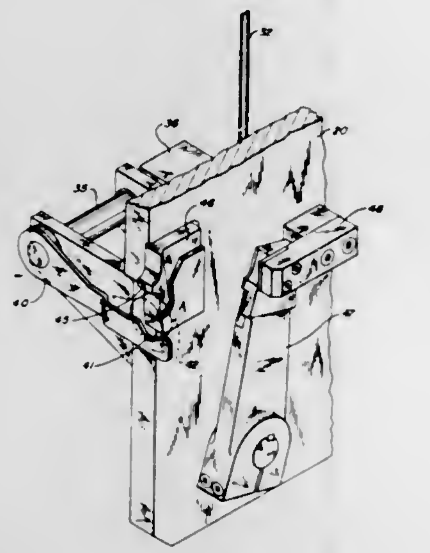

In a bail-applying apparatus, a pair of opposed ear contacting and lifting arms disposed to operate in concert with movable cover arms to engage the ears of an advancing container to stop the advance of the container and in ear-cradling notches in the distal end of each of the arms to lift the container by its ears to a positive upward stop. In its upward position the bail retaining aperture of the ear is in way of the exit end of a bail end forming die. The lift arm may include a sensing means for detecting the presence of an ear at the stop position.

3,398,712
FLEXIBLE SKIRTS FOR AIR CUSHION VEHICLES
Derek James Hardy, Cowes, Isle of Wight, and Lavis Albert Henry Riddle, East Cowes, Isle of Wight, England, assignors to Westland Aircraft Limited, Yeovil, England
Filed Aug. 22, 1966, Ser. No. 573,959
Claims priority, application Great Britain, Sept. 24, 1965, 40,882/65
10 Claims. (Cl. 114—67)

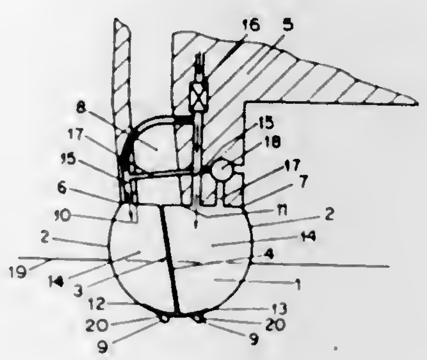

A flexible skirting assembly for a vehicle which, during one phase of operation, is wholly or partially supported on at least one cushion of pressurized gaseous fluid formed beneath the vehicle, and during another phase of operation acts as a displacement vessel, comprises a flexible, fluid-impermeable duct having orifices for the discharge of gaseous fluid adjacent the lower portion thereof. The flexible duct acts as at least part of the barrier to the escape of the pressurized gaseous fluid cushion by which the vehicle is supported, and as a passage to conduct the pressurized gaseous fluid to the discharge orifices. At least one flexible membrane within the duct defines an inflatable compartment which, when inflated, converts the skirting assembly into a buoyancy chamber, and closes off the discharge orifices and the gaseous fluid inlet to the flexible duct.

3,398,713
TRACTIVE AIR CUSHION VEHICLE
Arnold M. Hall, Noank, Conn., assignor to General Dynamics Corporation, New York, N.Y., a corporation of Delaware
Filed Aug. 24, 1966, Ser. No. 574,668
26 Claims. (Cl. 114—67)

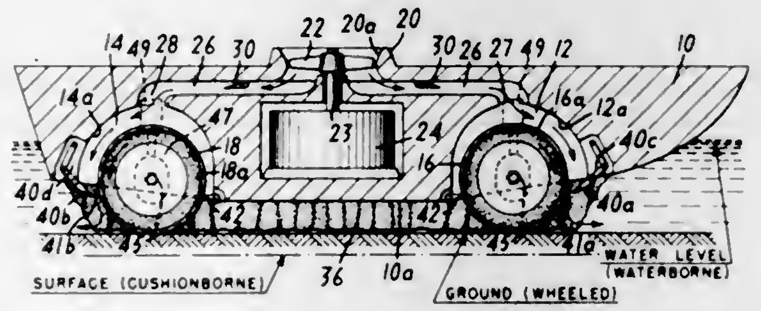

An air cushion amphibious vehicle capable of both airborne and overland travel, including fore and aft large inflatable rollers which support the vehicle for overland operation and are deflatable and retractable for water borne operation. During airborne operation, the surfaces of the rollers receive air under superatmospheric pressure from an air chamber, which exhausts through a levitation jet channel formed between a respective roller surface and a portion of the vehicle body. The rollers are rotated in a direction to direct at least a portion of the air in the levitation jet channel underneath the vehicle in the air cushion region to maintain a vortex of air around at least a portion of each roller surface when the vehicle is supported on the cushion.

3,398,714
SECURING MEANS FOR ROPES, HAWSERS AND THE LIKE
Carl Olov Harry Wallin, Bergliden 20, Ektorp, Sweden, and Karl Axel Rune Kock, Ravstigen 1, Saltsjo-Duvnas, Sweden
Filed Feb. 7, 1966, Ser. No. 525,700
Claims priority, application Sweden, Feb. 9, 1965, 1,638/65
12 Claims. (Cl. 114—218)

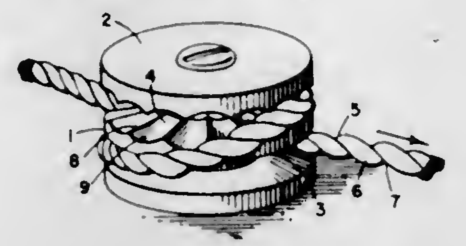

An improved securing means for ropes, hawsers, and the like formed of twisted cords, which locks the rope without relying on frictional forces. The means comprises engaging surfaces having pronounced V-shaped waves so arranged that the crests of the waves on one engaging surface are approximately opposite the center of the troughs of the waves on the opposing engaging surface so that when a rope is secured therebetween the crests and troughs of the opposing surfaces engage the contours of the rope locking it in a substantially frictionless manner. The design of the wave-like surfaces is such that the distance between the opposing crests and troughs increases from the center of the means towards the periphery thereof, thus allowing ropes of various dimensions to be secured by the invention.

3,398,715
SEISMIC UNDERWATER DETECTOR SYSTEM
Kenneth E. Burg, Dallas, Tex., assignor to Texas Instruments Incorporated, Dallas, Tex., a corporation of Delaware
Filed Dec. 30, 1966, Ser. No. 606,282
5 Claims. (Cl. 114—235)

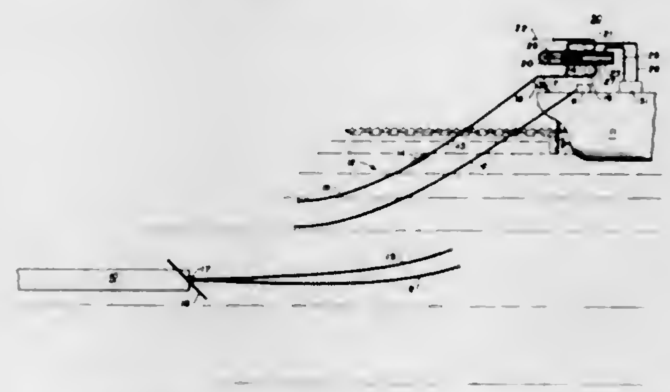

An improved seismic underwater detector towing system which interposes tensioning means between the ends of a tow line, one end of which is attached to a tow vessel and the other end of which is attached to a neutrally buoyant seismic streamer. The tensioning means is adapted to maintain a constant tension in the tow line to reduce in-line, vertical and transverse movements of the streamer and thereby reduce noise generated by the towing system for permitting more accurate recording of seismic signals.

3,398,716
SUBMERSIBLE TWIN HULLED TUG
Torelv Neilson, 83 89th St., Brooklyn, N.Y. 11209
Filed Oct. 30, 1967, Ser. No. 678,839
10 Claims. (Cl. 114—235)

Twin submersible hulls each having a conning tower supporting a platform extending therebetween are rigidly connected to the stern of a float or barge for its propulsion. The connection of the tug to the barge is by means of an articulated hook extending from each of a pair of

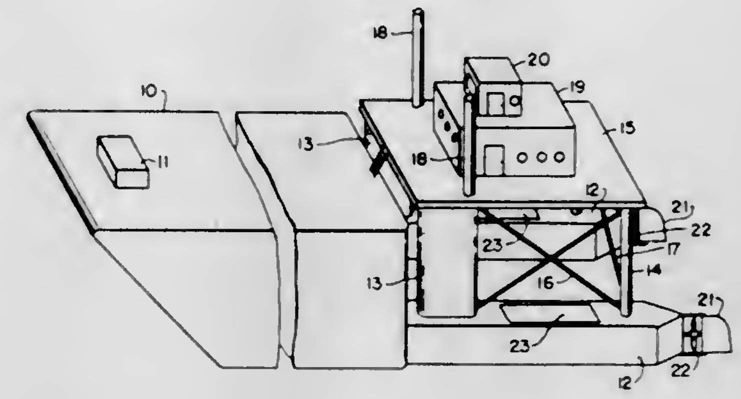

projections on the hulls of the tug into corresponding recesses in the stern of the barge. The connection may also be by means of electromagnets.

3,398,717
THERMOPLASTIC DISPENSING MECHANISMS
Hans C. Paulsen, Lexington, Mass., assignor to United Shoe Machinery Corporation, Flemington, N.J., a corporation of New Jersey
Filed July 1, 1966, Ser. No. 562,254
6 Claims. (Cl. 118—7)

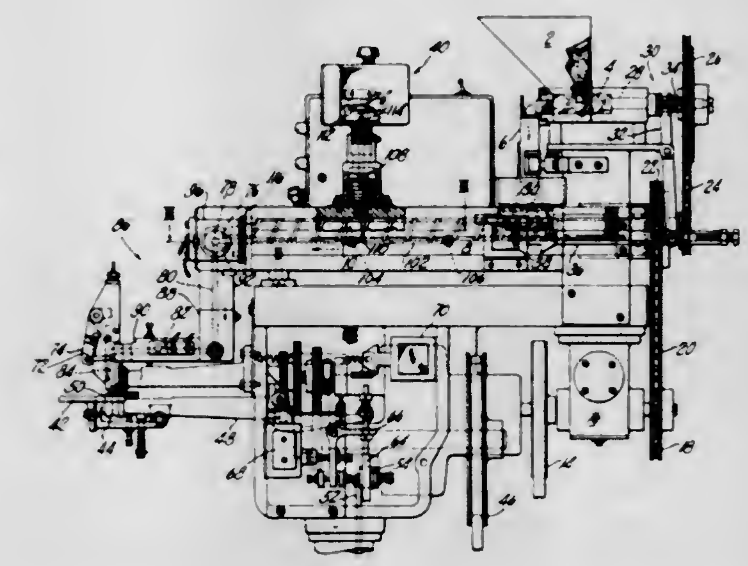

Apparatus for melting and feeding thermoplastic material consisting of an elongated, heated, housing having a pair of bores along the long dimension. One of the bores contains an extruder screw which takes solid material and forces it through the heated housing such that when the material leaves the screw it is in its molten state. Adjacent the exit of the extruder screw is a pumping means for selectively feeding the material to either a nozzle or to the second bore which recirculates the material to the entrance of the first bore in response to a pressure sensitive means in the first bore.

3,398,718
FLUIDIZED-BED COATING APPARATUS
Roger L. Pilloton, Oak Ridge, Tenn., assignor to the United States of America as represented by the United States Atomic Energy Commission
Filed Mar. 10, 1965, Ser. No. 438,800
1 Claim. (Cl. 118—48)

1. A gas-solid coating apparatus comprising: a contacting chamber adapted to hold a columnar bed of discrete solid particles; said chamber having a major portion com-

prising an upper cylindrical section and a tapered lower section; a downwardly directed substantially conical face plate having an included angle between 100 to 150; said face plate being apertured at its apex and having a plurality of apertures peripherally disposed thereabout; said face plate being joined at the periphery thereof to said tapered lower section, thereby forming a bottom for said contacting chamber; a terminal member including an upper plate portion closely spaced from and conically generally conforming to said face plate means connecting and enclosing the face plate and upper plate portion at the peripheral extents thereof whereby is formed a second chamber, said second chamber communicating with said contacting chamber through said peripherally disposed apertures; said upper plate portion comprising the upper

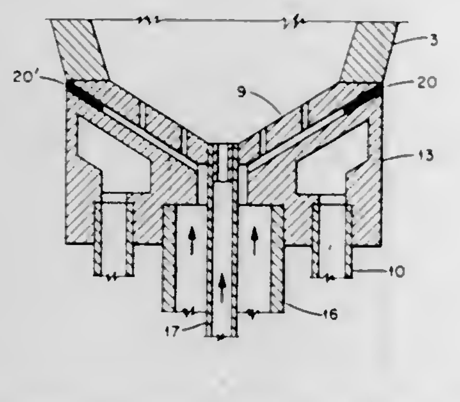

wall of an annular chamber including fluid inlet and outlet means and being in a heat transfer relationship with said second chamber; a central gas passageway connected with the face plate at the centrally disposed aperture in said face plate and passing centrally through said annular chamber whereby is provided a gas-inlet and solids outlet for the contacting chamber; a conduit disposed concentrically about said central gas passageway and connected to the bottom wall of said annular chamber at a central aperture thereof whereby to communicate with the contacting chamber through said peripherally disposed apertures; gas feed means communicating separately with said gas passageway and said conduit whereby to maintain as a fluidized bed, and to coat, solids contained in the contacting chamber; means to supply coolant to said annular chamber; and means to heat said contacting chamber.

3,398,719
BIRDCAGE PERCH OR WALKWAY
Marilyn C. Walker, 2000 Stadium Way, Los Angeles, Calif. 90026
Filed July 27, 1966, Ser. No. 568,312
4 Claims. (Cl. 119—26)

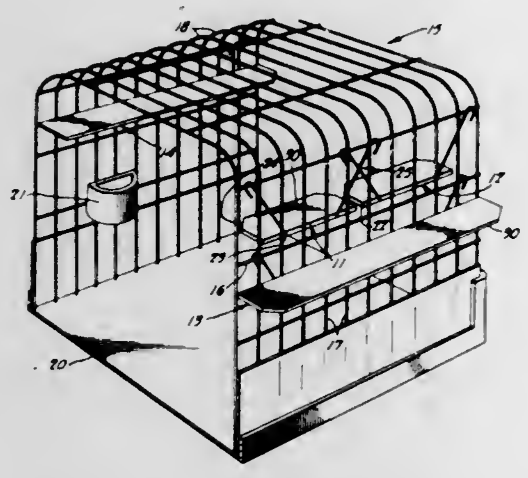

A walkway for a birdcage comprising a slab having holes in opposite edges thereof to receive hook members pivotally and frictionally inserted therein, the hook members being insertable in certain of the holes. The device is adapted to be adjusted in different angular positions to wires of the cage to form a walkway, swing, or suspended platform.

3,398,720
ONCE-THROUGH STEAM GENERATOR HAVING A CENTRAL MANIFOLD AND TUBE BUNDLES OF SPIRAL TUBE CONSTRUCTION
Nicholas D. Romanos, Chattanooga, Tenn., assignor to Combustion Engineering, Inc., Windsor, Conn., a corporation of Delaware
Filed Sept. 26, 1966, Ser. No. 582,076
19 Claims. (Cl. 122—32)

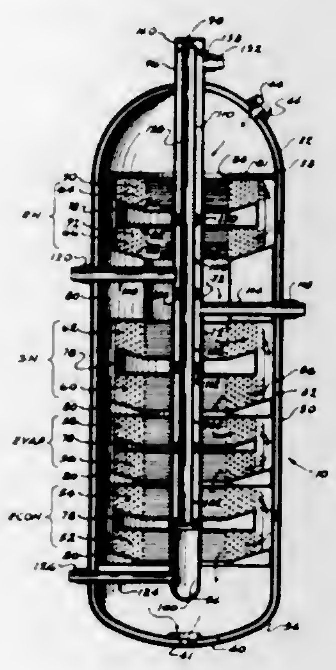

A once-through, gas-operated vapor generator of shell and tube design wherein a number of tube bundles representing the economizer, evaporator, superheater and reheater sections of the unit are arranged for series flow of vaporizable fluid. Each of the tube bundles comprises a group of spirally wound heat exchange tubes arranged in vertically spaced layers. The tube bundles are connected for series flow by an axially extended manifold conduit to which the tubes communicate. The conduit is appropriately partitioned into axially spaced chambers so as to define, in conjunction with the tube bundles, a continuous vaporizable fluid flow path through the unit.

3,398,721
CONTINUOUS FLOW HEATER FOR LIQUIDS
Karl Zangl, 10 Kantstrasse, 8 Munich 13, Germany
Filed July 1, 1966, Ser. No. 562,320
Claims priority, application Germany, July 1, 1965, Z 11,627
15 Claims. (Cl. 122—33)

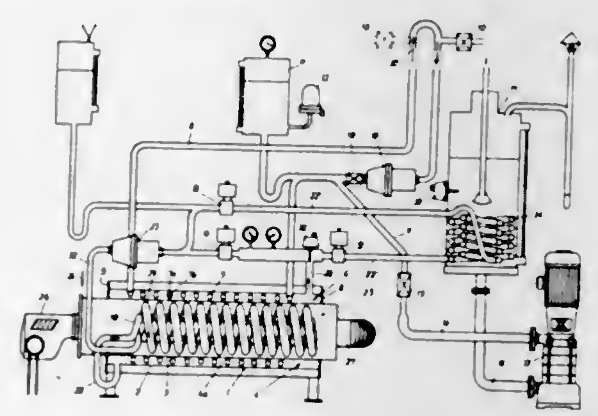

A continuous flow heater having a first fluid circuit containing a use liquid therein, preferably water. The first fluid circuit is maintained at a pressure substantially above

atmospheric pressure whereby the use liquid can be discharged from the circuit at a temperature higher than the atmospheric boiling temperature of the liquid. Pressurized feed means are provided for supplying additional use fluid to the circuit and for maintaining the fluid in the circuit at the desired pressure level. A second fluid circuit having a heating liquid therein, preferably oil, is used to heat the use liquid in the first circuit. The normal operating temperature of the heating liquid in the second circuit is greater than the discharge temperature of the first fluid but less than the atmospheric boiling temperature of the heating fluid.

3,398,722
HEAT EXCHANGER APPARATUS
Robert C. Smykal, Jr., 15186 Drake Road, Strongsville, Ohio 44136, and James F. McMahon, Jr., Gates Mills, Ohio; said McMahon assignor to said Smykal
Filed June 8, 1966, Ser. No. 556,141
6 Claims. (Cl. 122—250)

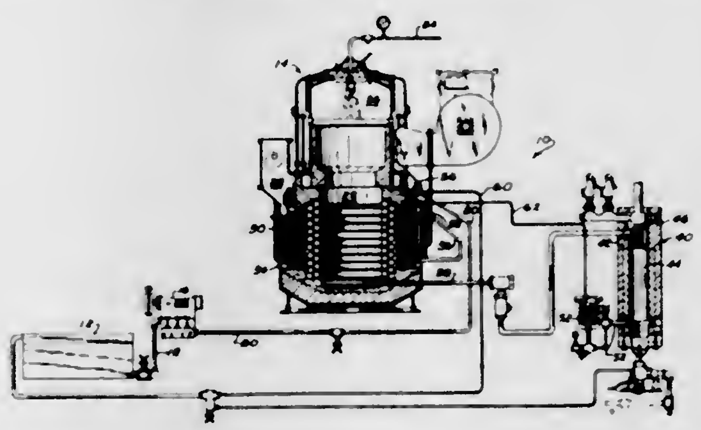

Disclosed herein is a steam generator system having an economizer coil connected at one end to a reservoir and at the other end to a main coil of a steam generator. A tube is mounted in the economizer coil in a coaxial relationship therewith. One end of the tube is connected to a separator means where steam is separated into water and gas. The separator water is circulated through the tube to heat the water from the reservoir by cooling the water from the separator means.

3,398,723
METHOD AND SYSTEM FOR VAPORIZING AND SUPERHEATING CRYOGENIC FLUIDS
Charles E. Smalling, Oklahoma City, Okla., assignor to Black Sivalls & Bryson, Inc., Kansas City, Mo., a corporation of Delaware
Filed Mar. 14, 1967, Ser. No. 623,054
7 Claims. (Cl. 122—356)

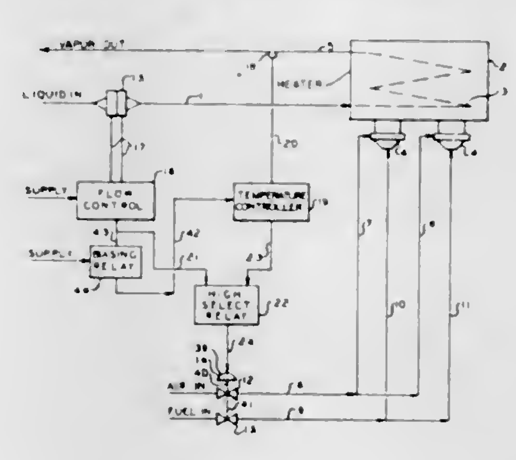

The present invention relates to an improved method and system for vaporizing and superheating cryogenic fluids, and more particularly, to an improved method and system for convectively heating cryogenic fluids wherein the fluids are vaporized and superheated to a desired temperature under constant or varying throughput conditions.

3,398,724
ROTARY PISTON INTERNAL-COMBUSTION ENGINE
Heinz Lamm, Esslingen-St. Bernhardt, Lothar Kortner, Stuttgart-Bad Cannstatt, and Hubert Zu Hohenlohe, Eschenau-Waldhof, Germany, assignors to Daimler-Benz Aktiengesellschaft, Stuttgart, Unterturkheim, Germany
Filed Oct. 12, 1966, Ser. No. 586,119
Claims priority, application Germany, Oct. 13, 1965, D 48,406
15 Claims. (Cl. 123—8)

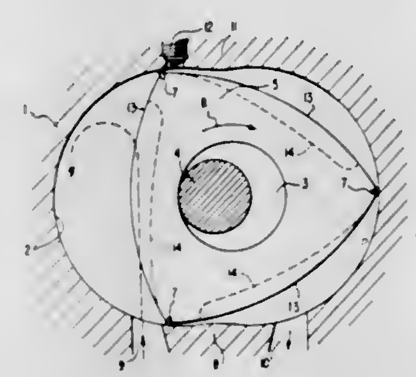

A rotary piston internal-combustion engine, especially of trochoidal construction in which within a housing having lateral parts and a casing with a multiarched internal surface that includes zones approaching the axis of the engine, a piston provided with piston recesses in its flanks is supported on the eccentric of an eccentric shaft, whereby the piston during its movement relative to the casing and to the eccentric shaft slides with its corners at the casing surface and thereby controls gas exchange channels arranged within one of the areas of a zone near the axis; each piston recess is of approximately rectangular configuration as viewed in plan view while the depth of the recess increases steadily from one side adjacent one piston corner up to a predetermined point and remains substantially constant up to the portion adjacent the other piston corner; the cross section of the portion of the piston recess which changes in depth is preferably substantially triangular while the cross section of the piston recess of substantially constant depth is approximately trapezoidal.

3,398,725
ROTARY ENGINE
Victor G. Null, 5212 Von Phul, St. Louis, Mo. 63107
Filed Nov. 16, 1966, Ser. No. 594,712
13 Claims. (Cl. 123—16)

A rotary internal combustion engine with its rotor journaled eccentrically within the engine housing in tangential relation with a portion of the housing. The rotor is formed with an axial passageway, a plurality of radial cavities, and radial passageways connecting the axial passageway and radial cavities. Pistons mounted in the radial cavities are yieldably biased outwardly into engagement with the housing to form vanes for propelling the rotor. The pistons are formed with longitudinal passages normally closed by pressure responsive check valves and the radial passageways from the rotor axial passageways are similarly closed, so that during outward movements of the pistons, fuel mixture is drawn from the axial passage in the rotor, into the piston cavities, and then, during inward movements of the piston the mixture is compressed within the piston cavities until, as the piston approaches

the region of tangential relation, the compression is sufficient to open the check valve within the piston, and the mixture is injected into the annular space between the

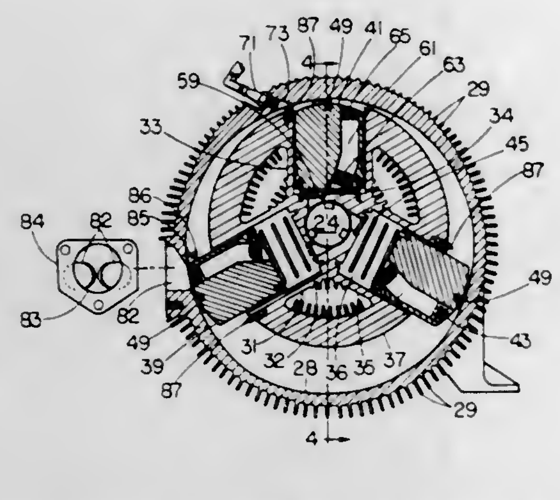

rotor and housing. A spark plug is mounted in the housing in this region to ignite the injected, compressed mixture, which expands against the posterior side of the piston to propel the rotor.

3,398,726
INTERNAL COMBUSTION ENGINES OF THE TYPE INCLUDING A HEAT INSULATED COMBUSTION CHAMBER
Constant Bricout, Paris, France, assignor to Les Applications Techniques Industrielles (L.A.T.I.), Paris, France, a French civil company
Filed Feb. 1, 1966, Ser. No. 524,208
Claims priority, application France, Feb. 8, 1965, 4,783
6 Claims. (Cl. 123—32)

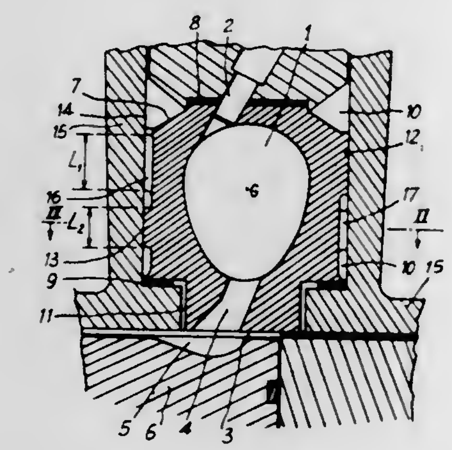

In an internal combustion engine a combustion chamber disposed above the cylinder in a bore of the cylinder head and thermally substantially insulated therefrom, heat conducting means thermally connecting the outer wall of the chamber with the inner wall of the bore to control the temperature in said heat-insulated combustion chamber in a predetermined manner.

3,398,727
ROTARY INTERNAL COMBUSTION ENGINES
Philip Conrad Vincent, London, England, assignor to Vincent Rotary Engines, Limited, London, England, a British company
Filed Feb. 1, 1967, Ser. No. 613,357
28 Claims. (Cl. 123—44)

A rotary internal combustion engine comprising two relatively rotatable main components one having radially extending cylinders and the other comprising an annular structure encircling said cylinders and having inlet and outlet ports successively communicating with the cylinder ends, sealing blades mounted for radial movement on at least one of the components, and disposed between the cylinder ends, means for spacing the blade edges away

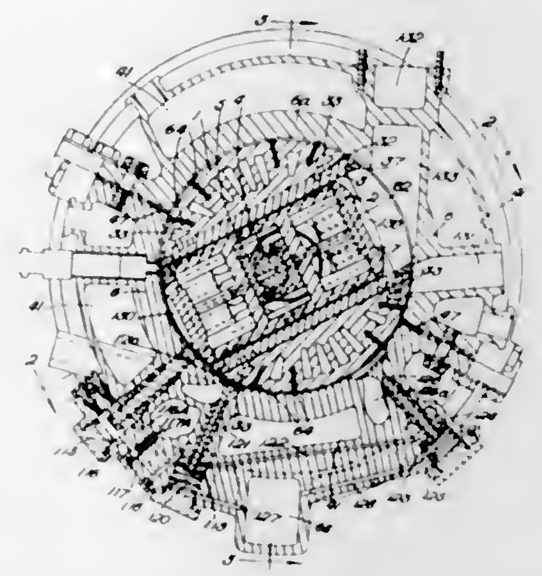

from the other component sufficiently to prevent wear whilst preventing leakage between the cylinder which components have opposed circumferential sealing faces at opposite ends of the blades and means for injecting sealing fluid under pressure between said faces.

3,398,728
TWO PISTON SLEEVE PORT ENGINE
James A. Hardman, Logan, Utah (1095 Hyland Lake Circle, Salt Lake City, Utah 84121)
Continuation of application Ser. No. 195,651, May 7, 1962, which is a continuation-in-part of application Ser. No. 119,485, June 26, 1961. This application Aug. 6, 1965, Ser. No. 482,983
16 Claims. (Cl. 123—56)

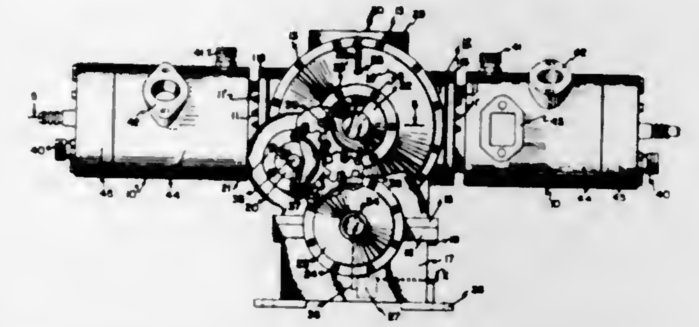

This invention is embodied in a reciprocating piston, internal combustion engine of the sleeve port type and includes a two cylinder, two cycle construction with said cylinders being directly opposed and connected by a single piston rod which is operably associated with and actuates a shuttle and flywheel mechanism, said latter components converting the reciprocating motion of the opposed pistons to rotary output power in the output shaft of the engine.

3,398,729
DIESEL DISTRIBUTOR VALVE AND GOVERNOR THEREFOR
Raymond J. Maddalozzo, Chicago, Ill., assignor to International Harvester Company, Chicago, Ill., a corporation of Delaware
Filed Oct. 31, 1966, Ser. No. 590,782
10 Claims. (Cl. 123—139)

A distributor for dividing the output of an engine driven fuel pump into a plurality of streams carried by separate lines connected to injectors, one for each engine

cylinder, has a ported sleeve driven in timed relation to the engine to control communication between the pump and each line. A spool valve slideable axially within the sleeve meters the fuel flow through the ported sleeve. En-

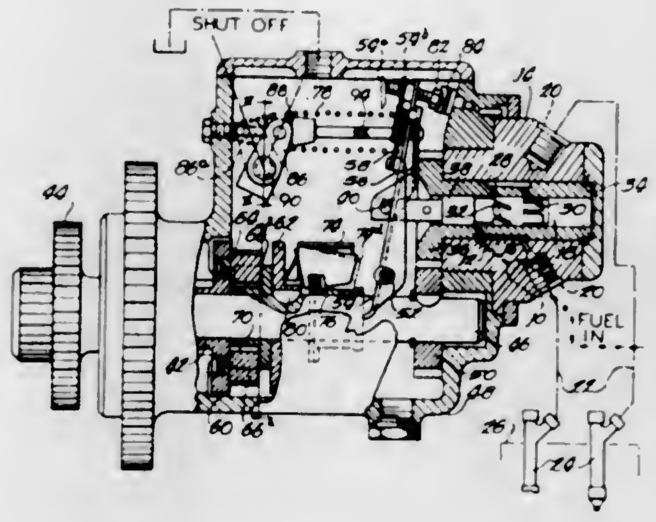

gine speed responsive means varies the indexed position between the sleeve and its drive to advance or retard timing. Engine speed responsive means also slides the spool within the sleeve to change the fuel metering.

3,398,730
FUEL INJECTION SYSTEM AND DISTRIBUTOR VALVE THEREFOR
Raymond J. Maddalozzo, Chicago, Ill., assignor to International Harvester Company, Chicago, Ill., a corporation of Delaware
Filed Oct. 31, 1966, Ser. No. 590,779
5 Claims. (Cl. 123—139)

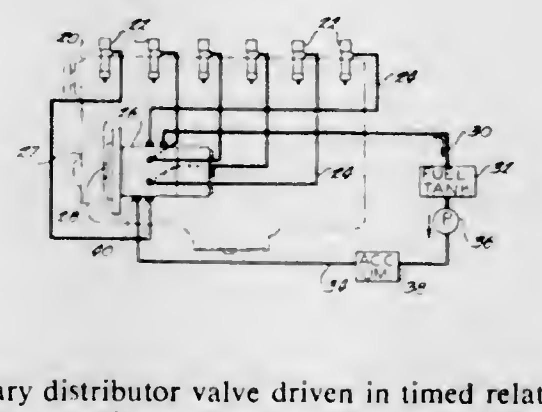

A rotary distributor valve driven in timed relation with the engine supplies a plurality of individual lines, each connected with a fuel injector nozzle from an inlet connected with a source of fuel under pressure. During operation of the valve the individual lines are sequentially subject to full pressure to charge an accumulator chamber in each nozzle, then to drain pressure to initiate injection from the nozzle and then an intermediate pressure to terminate injection. The period between initiation and termination is determined by a governor.

3,398,731
DEVICE FOR AUTOMATIC CONTROL OF THE FUEL SUPPLY TO DIESEL ENGINES
Carl-Gustav Simon Johansson, Molndal, Sweden, assignor, by mesne assignments, to Aktiebolaget Gylling & Co., Stockholm, Sweden
Filed Dec. 8, 1966, Ser. No. 600,206
Claims priority, application Sweden, June 22, 1966, 8,511/66
8 Claims. (Cl. 123—198)

A device for automatic cutting off the fuel supply conduit to diesel engines of the kind provided with a charging generator, an electric battery, a start relay and a key lock. An additional relay is coupled between the generator and earth having a core connected to a switch in a current circuit to the positive pole of the battery via an

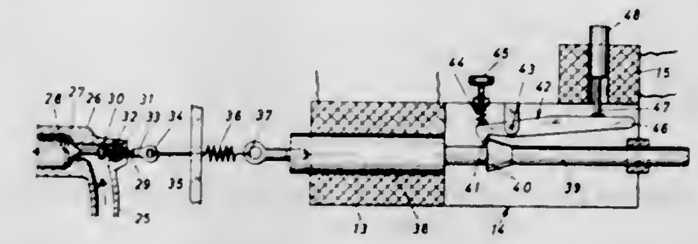

off position of the key lock to a solenoid. The operation of the generator serves to energize the additional relay to close the switch and the solenoid is adapted at current passage in the circuit to cut off the fuel supply conduit.

3,398,732
PORTABLE STOVE STRUCTURE
Ray C. Barker, 8522 W. 9th, Wichita, Kans.
Filed Feb. 13, 1967, Ser. No. 615,589
5 Claims. (Cl. 126—9)

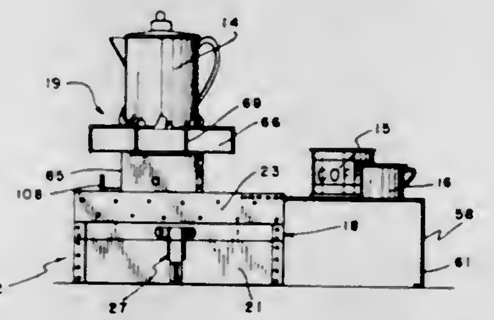

A portable stove comprising a rectangular case with a hinged top portion adapted to enclose a burner when the latter is reclined. Said top portion has an opening which is uncovered by a slide. In use the slide is moved to one side to form a table and the burner is erected to extend through the opening.

3,398,733
COMBINATION BARBECUE SMOKER LEAF BURNER
Carl R. Bradley, Farnhamville, Iowa 50538
Filed Mar. 4, 1966, Ser. No. 531,665
7 Claims. (Cl. 126—25)

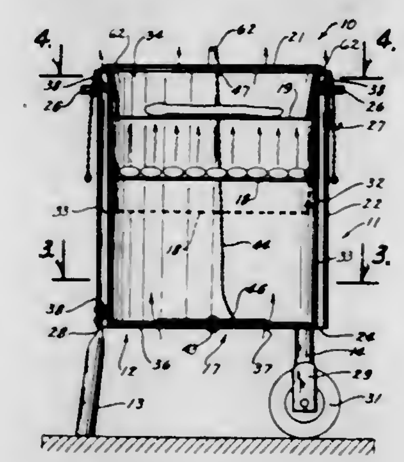

This invention pertains to a combination incinerator and barbecue grill wherein a cylindrical, upright housing is mounted within a cylindrical, upright portable casing providing thereby an air space therebetween, and with a foraminous base mounted in the housing for holding trash, leaves, or the like for burning purposes, the air

coming up through the foraminous base, with an upper removable grate suspended from the top edge of the housing for holding food to be cooked, and with an intermediate removable grate mounted below the upper grate, also in a suspended manner relative to the upper edge of the housing, the intermediate grate adapted to hold charcoal, briquettes and the like for heating the food being cooked.

3,398,734
TWO-RING PORTABLE STOVE OPERATED ON LIQUIFIED GAS
Carl-Anker Mejyr, Flen, Sweden, assignor, by mesne assignments, to Primus-Sievert AB, Sundbyberg, Sweden, a corporation of Sweden
Filed Nov. 21, 1966, Ser. No. 595,690
Claims priority, application Sweden, Dec. 20, 1965, 16,505/65
2 Claims. (Cl. 126—38)

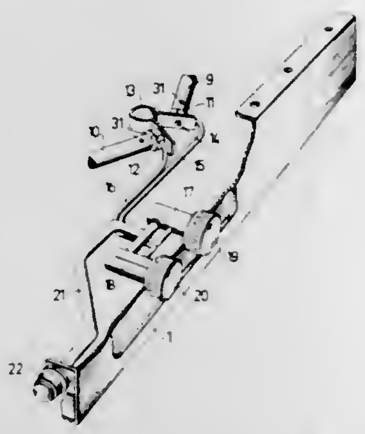

1. A portable stove comprising two burners secured in adjacent relationship, a mixer pipe extending from each of said burners towards each other, their free ends terminating adjacent each other, a flexible pipe extending towards and terminating adjacent the free end of each of said mixer pipes, a burner jet mounted on the terminal end of each of said flexible pipes, each of said burner jets extending into the free end of one of said mixer pipes, and a spring member for pressing and retaining said burner jets in the free ends of said mixer pipes.

3,398,735
REMOVABLE OVEN DOOR AND HINGE ASSEMBLY
Roy Hailey Barber, Cleveland, Tenn., assignor to Hardwick Stone Company, Cleveland, Tenn., a corporation of Delaware
Filed July 10, 1967, Ser. No. 652,129
7 Claims. (Cl. 126—191)

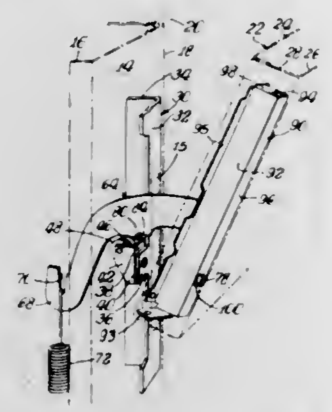

An oven door having a hinge holder in sliding engagement with a hinge guide assembly which is pivotally connected at its lower end to the over door frame and has a hinge member pivotally mounted thereto, the hinge member including a rearwardly extending arm connected by a spring to the frame and also including a depending arm lying generally longitudinally of the hinge assembly guide, the depending arm having a locking lug which releasably engages in a locking slot of the hinge holder under the action of the spring to prevent removal of the door from the hinge guide, the rearwardly extending arm of the hinge member having its underside provided with a notched projection which is adapted to engage with a hinge roller mounted on the oven door frame only in one angular position of the door so as to move the locking lug out of engagement in the locking slot to allow the door and its hinge holder to be slid off the hinge assembly guide.

3,398,736
APPARATUS FOR DETERMINING INSTANTANEOUS ACCELERATION OF RECURRING BIOREGULATORY EVENTS
John Weber Alexander Brant, 2100 SW. Ecole Ave., Beaverton, Oreg. 97006, and Charles T. Hage, Lancaster, Calif.; said Hage assignor to said Brant
Filed Apr. 15, 1964, Ser. No. 359,872
8 Claims. (Cl. 128—2.05)

1. Electrical apparatus, comprising:
means for generating a plurality of electrical pulses each corresponding in time to the occurrence of a different one of a plurality of successive bioregulatory events of a similar nature in the body of a living organism;
means for producing interval voltages whose amplitudes are proportional to the time intervals between predetermined ones of said pulses; and
means for selectively combining said interval voltages to produce an acceleration signal whose voltage is proportional to the instantaneous acceleration of occurrence of one of said events.

3,398,737
INTRAUTERINE CONTRACEPTIVES
Hylton F. G. Sheppard, 93 Harley St., London, England, and Leonard R. Cook, Pied Pipers, Alcocks Lane, Tadworth, Surrey, England
Filed Oct. 18, 1965, Ser. No. 496,891
Claims priority, application Great Britain, Oct. 7, 1965, 42,647/65
7 Claims. (Cl. 128—130)

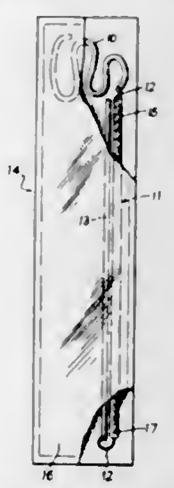

A sterile contraceptive package is disclosed in which a coiled intrauterine device has a strand or tail which passes through a tubular introducer for the device and is attached to a plunger for expelling the device into the uterus. The items are so disposed within the package that the device can be drawn into the tube and the plunger inserted ready for use without exposing the operative parts of the combination to nonsterile conditions.

3,398,738
REFRIGERATED SURGICAL PROBE
Bernard L. Lamb, Altadena, and Urban E. Gross, Jr., Anaheim, Calif., assignors to Aerojet-General Corporation, Azusa, Calif., a corporation of Ohio
Continuation-in-part of application Ser. No. 360,563, Apr. 17, 1964. This application Sept. 24, 1964, Ser. No. 398,802
11 Claims. (Cl. 128—303.1)

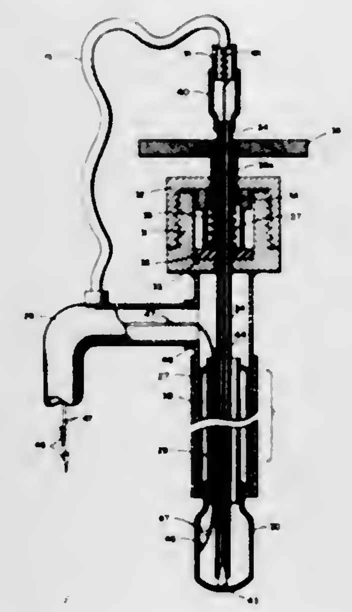

1. A device for administering a treatment to living body tissue, said device comprising
(a) a probe having an elongated hollow housing,
(b) a hollow tip member having a closed lower end, said tip member being secured to the lower end of said housing,
(c) a delivery tube carried by said probe said delivery tube extending at least partially within said housing and communicating with the interior of said tip member for delivering fluid refrigerant therethrough into said tip member,
(d) an elongated valve stem extending within said delivery tube and being of substantially smaller diameter than the inner diameter of said delivery tube,
(e) a valve member carried by the lower end of said valve stem and receivable by the lower open end of said delivery tube, said valve member being enlarged with respect to said valve stem and being of variable cross-sectional diameter, and
(f) means for inducing relative axial movement between said delivery tube and said valve member carried by said valve stem to vary the restriction of the lower open end of said delivery tube by said valve member for regulating the rate of delivery of fluid refrigerant through said delivery tube into said tip member.

3,398,739
PANTY WITH OPENABLE CROTCH
Nicholas A. Marino, Chicago, Ill., assignor to Sears, Roebuck and Co., Chicago, Ill., a corporation of New York
Filed May 10, 1966, Ser. No. 548,924
4 Claims. (Cl. 128—529)

1. A panty type undergarment for females, having a torso portion, leg portions and a crotch portion,
(a) said leg portions each including a section adapted to be disposed adjacent the inner thigh of the wearer and terminating in a substantially free edge adjacent the crotch portion and extending generally in a front-to-rear direction,
(b) said crotch portion comprising a pair of at least partially overlapping pieces of textile fabric normally covering adjacent portions of the wearer's body and partially underlying said free edges of the thigh sections and extending substantially across the crotch of the wearer,

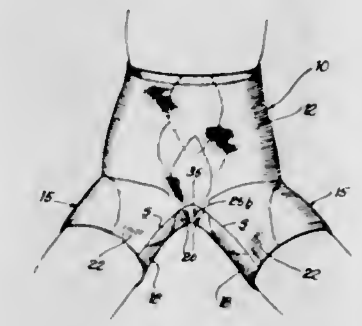

(c) said pieces being substantially free from each other and partially secured marginally by stitching to adjacent portions of the garment and each having a substantially free edge extending crosswise of the wearer's torso, said last-mentioned free edges being spaced apart and generally parallel, whereby by digital engagement thereof, said pieces may be drawn apart in a front-to-rear movement to expose adjacent portions of the wearer's anatomy.

3,398,740
SENSING DEVICE FOR PLETHYSMOGRAPHIC APPARATUS
Stepan Figar, Prague, Czechoslovakia, assignor to Ceskoslovenska akademie ved, Prague, Czechoslovakia
Filed Aug. 4, 1965, Ser. No. 477,136
Claims priority, application Czechoslovakia, Nov. 24, 1964, 6,517/64
17 Claims. (Cl. 128—2)

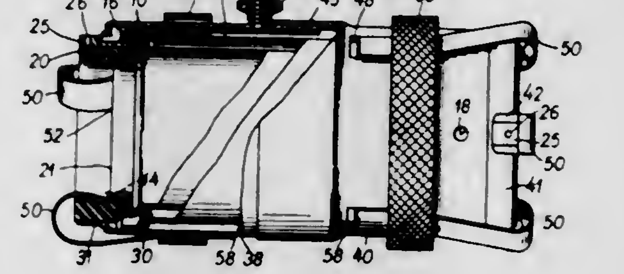

In an apparatus for taking plethysmographic measurements on body parts, volume changes of a body part are detected by changes in an electrical circuit. There is a tubular casing consisting of two tubular elements which are secured to each other, and an annular insulating member within an end portion of each of the two tubular elements. The insulating members support tubular electrode means in a coaxial and spaced relationship with respect to the inner face of the casing. Conductive means connect the electrode means to a measuring circuit. The body part to be measured is inserted in a passage at least partly formed by the electrode means. The electrical circuit includes a capacitor whose two conductive surfaces are constituted by the body part and the electrode.

3,398,741
MASSAGING MACHINE
Melvin Burk, 425 Dresden Ave., Akron, Ohio 44319
Filed Dec. 3, 1965, Ser. No. 512,041
9 Claims. (Cl. 128—57)

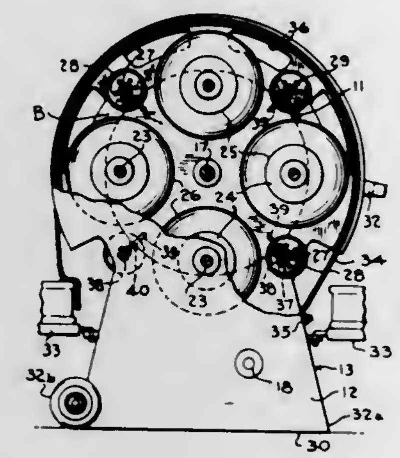

1. A massaging or like treating machine comprising: a framework having spaced uprights; a reel rotatably mounted between said uprights and having axially spaced flanges; drive means for rotating said reel; a series of peripherally spaced shafts mounted between said flanges; said shafts having a plurality of axially spaced wheels mounted thereon to be relatively rotatable about the axis of the respective shaft; and said wheels including thereon resilient annular treads, whereby as the reel is rotated a succession of said annular treads are yieldingly rotatably depressible against a body area being treated; said reel including a second series of shafts mounted between said flanges to extend intermediate adjacent said first-named shafts, said second series of shafts having mounted thereon resilient body-engaging means of smaller peripheral size than said resilient annular treads.

3,398,742
BED TRACTION UNIT
Edwin W. Alexander, 842 Hollywood Circle, Cuyahoga Falls, Ohio 44221
Filed Sept. 27, 1965, Ser. No. 490,538
6 Claims. (Cl. 128—75)

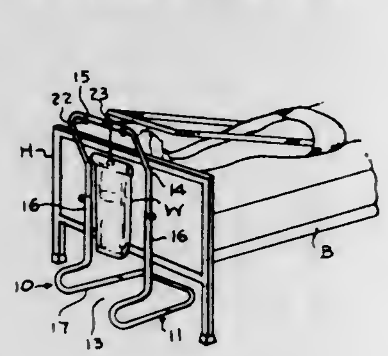

Bed traction device comprises segmental frame formed of continuous elongated rigid material to provide lower loop-shaped, horizontal base portion, laterally spaced vertical side portions in a vertical plane and connected to sides of base portion by reversely looped portions presented outwardly of vertical plane, and an upwardly presented loop portion defining cross-piece between the vertical side portions. Frame freely slidable as unit on floor, supportingly to engage vertical side portions with end board of bed against tilting of frame due to pull of traction cable on pulley means attached to cross-piece.

3,398,743
CLOSED SYSTEM IRRIGATING APPARATUS FOR VISCUS ORGANS
Shimon Shalit, 63 Avon Circle, Port Chester, N.Y. 10573
Filed Oct. 20, 1965, Ser. No. 498,729
2 Claims. (Cl. 128—231)

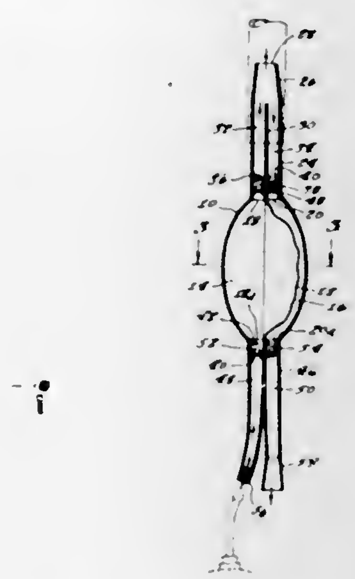

An irrigating device for human hygiene, comprising a hollow resilient bulb receivable between a tube from a viscus organ and a container of irrigating fluid, the bulb having a flexible central diaphram to divide the bulb interior into two compartments, one of which communicates between the viscus organ and fluid while the other communicates between the viscus organ and a discharge port; and one way valves to direct the container fluid through the first compartment to the viscus organ, and one way valves to direct the fluid through the second compartment from the viscus organ to the discharge port.

3,398,744
COLOSTOMY APPLIANCE
Edwin A. Hooper, Salt Lake City, Utah, assignor of one-third each to Waldemar A. Wallberg, Salt Lake City, Utah, and Melvin J. Clawson, Pacifica, Calif.
Filed June 17, 1965, Ser. No. 464,659
7 Claims. (Cl. 128—283)

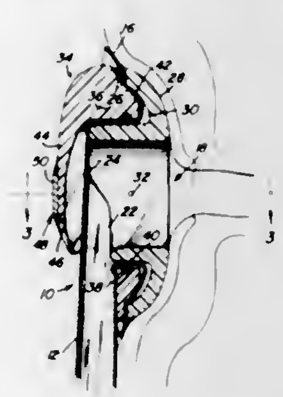

The colostomy appliance disclosed enables the wearer to move about unhampered and to participate in and cope with all essential activities of life, including certain athletic events previously impossible to engage in when wearing competitive appliances. This innovation is characterized by an adapter unit embodying a bag attaching, suspending and filling neck, an annular pressure responsive flange carried by and surrounding said neck and lateral to the axis of said neck and capable of residing in intimate contact with the abdomen. The mouth of the bag is gathered tightly around the neck. The lip portions of the bag's mouth portion are initially guided by hand and pressed against an exterior channeled surface of said flange. A bag-mouth binding, sealing and retaining unit encircles

the mouth portion of the bag and neck. This retaining and capping unit is readily and manually applicable and removable and equipped with a cleat whereby a body encircling belt can be attached to slotted ends of said cleat.

3,398,745
DEVICE FOR THE TAPPING OF URINE AND SIMILAR PURPOSES
Stig Tjerneld, Bromma, and Olle Höök, Stockholm, Sweden, assignors to Aktiebolaget Stille-Werner, Stockholm, Sweden
Filed Oct. 4, 1965, Ser. No. 492,696
1 Claim. (Cl. 128—295)

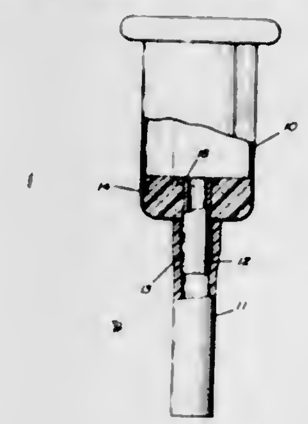

A device for the tapping of urine comprising a condom having a hose connected thereto by introducing a piece of tube from within through the bottom of the condom so that the bottom of the condom is first pushed into the hose and pierced so as to clamp a portion of the condom bottom between the outer surface of the piece of tube and the inner surface of the encasing piece of hose. An annular cushion of elastic and resilient material is disposed in the bottom of said condom having a central opening communicating with the piece of tube and filling out the lower part of the condom. An annular flange on the piece of tube holds the annular cushion in the lower part of the condom. The flange on insertion of the piece of tube into the hose to a sufficient extent is brought closer to the bottom of the condom than the thickness of the annular cushion to clamp the cushion between the under surface of the flange and the bottom of the condom, at the same time as the annular flange is positioned beneath the top surface of the annular cushion.

3,398,746
SURGICAL NEEDLE HOLDER
Daniel J. Abramson, 2800 Greenvale St., Chevy Chase, Md. 20015
Filed Oct. 21, 1965, Ser. No. 499,527
6 Claims. (Cl. 128—340)

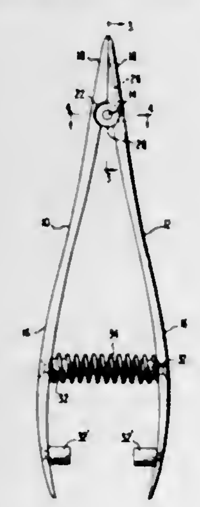

A surgical needle holder comprising a pair of pivoted members each having a short jaw and a longer handle on opposite sides of the pivot, said handles being at least of a length equal to the width of the hand of a user and being oppositely curved so as to fit in the palm for application of squeezing pressure between the fingers and heel of the thumb, said jaws having tip portions including substantially planar continuous faces for mutual engagement without interposition of other parts except when clampingly engaging a surgical needle, and resilient biasing means urging said handle portions apart to engage the clamping faces of the jaw tip portions.

3,398,747
AIRWAY
Victor H. Raimo, 214 Ballentine Parkway, Newark, N.J. 07104
Filed Jan. 6, 1966, Ser. No. 519,126
5 Claims. (Cl. 128—351)

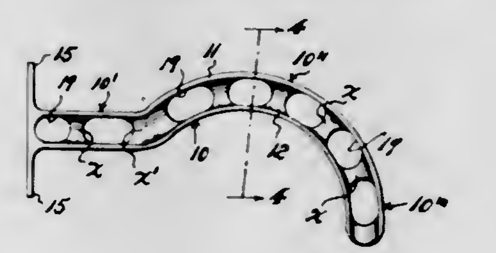

Airway devices for introduction through a patient's mouth to the trachea area of the throat have an elongated body having a straight portion adjacent the mouth and a curved pharyngeal portion. The body of the airway is made up of flat top and bottom walls spaced apart, but connected by an intervening strut formation extending along the medial line of the body and having periodic open lateral passages therethrough. The cross section of the strut is similar to two pyramids having their bases in contact with the top and bottom walls and their apices joined in a relatively flexible juncture permitting pivoted movement of the top and bottom walls together on one side and apart on the other side, thus preventing complete occlusion of the air passage by biting pressure on the top and bottom walls.

3,398,748
BRASSIERE HAVING ADJUSTABLE CUP CONSTRUCTION
Jack Abel, 16—24 202nd St., Bayside, N.Y. 11360
Filed Jan. 14, 1966, Ser. No. 520,571
14 Claims. (Cl. 128—465)

A brassiere construction includes cup portions which are each independently adjustable to vary the volume enclosed therein.

3,398,749
BRASSIERE
Dora A. Barg, 4573 N. 30th St., Milwaukee, Wis. 53209
Filed May 19, 1966, Ser. No. 551,306
6 Claims. (Cl. 128—513)

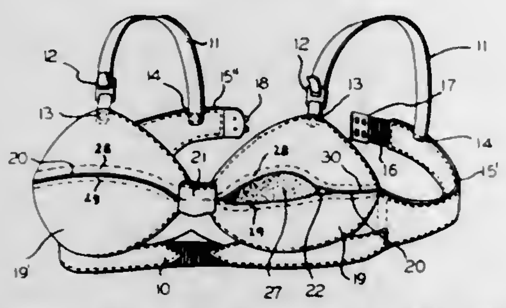

1. In a brassiere having a pair of spaced breast cups, the improvement comprising each of said breast cups having a first pocket defined on and carried by the exterior surface thereof for receiving and containing valuables therein without disturbing the natural effect to be created thereby, and a second pocket defined on and carried by the interior surface of each cup for receiving and containing padding material for augmenting the form, shape, size and contour of the natural breast support thereby.

3,398,750
ARTICLE TREATING AND CONVEYING SYSTEM
Jerome B. Chambers, New York, and Davis D. Dinney, Garden City, N.Y., assignors to American Machine & Foundry Company, a corporation of New Jersey
Filed Feb. 19, 1965, Ser. No. 434,065
11 Claims. (Cl. 131—25)

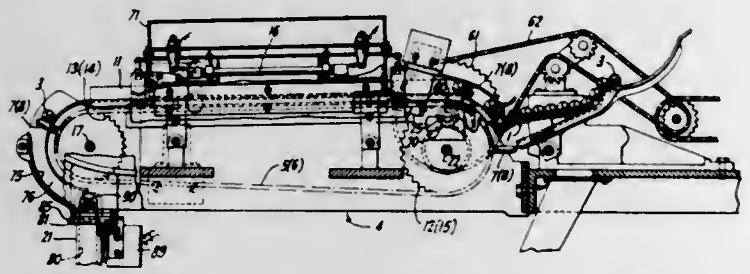

Cigar drying apparatus including a conveyor for orienting and transporting cigars, a heater and means for transferring cigars from the dryer to a receiver.

3,398,751
APPARATUS FOR FEEDING PARTICULATE MATERIAL AND FORMING ROD THEREFROM
Samuel J. Silberman, 885 Park Ave., New York, N.Y. 10021
Filed Oct. 27, 1965, Ser. No. 505,342
13 Claims. (Cl. 131—59)

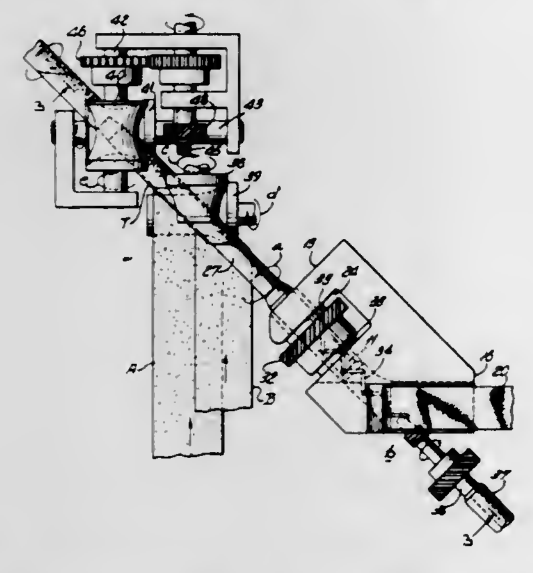

A cigar producing machine includes a body member having a longitudinal bore and a side opening through which filler tobacco is fed. An internally threaded feed tube extends into the body member bore and is rotated in a direction opposite to that of the thread pitch. Driven concave canted rolls engage the feed tube outer face to advance along the feed tube a helically wound tube of binder and wrapper bands fed at an angle to the feed tube. A moisture injecting nozzle projects into the body member bore and supports and rotates in a direction opposite to that of the feed tube, a wire feed screw which extends along the length of the feed tube.

3,398,752
APPARATUS FOR FEEDING PARTICULATE MATERIAL AND FORMING ROD THEREFROM
Samuel J. Silberman, 885 Park Ave., New York, N.Y. 10021
Continuation-in-part of application Ser. No. 505,342, Oct. 27, 1965. This application July 19, 1966, Ser. No. 566,262
17 Claims. (Cl. 131—59)

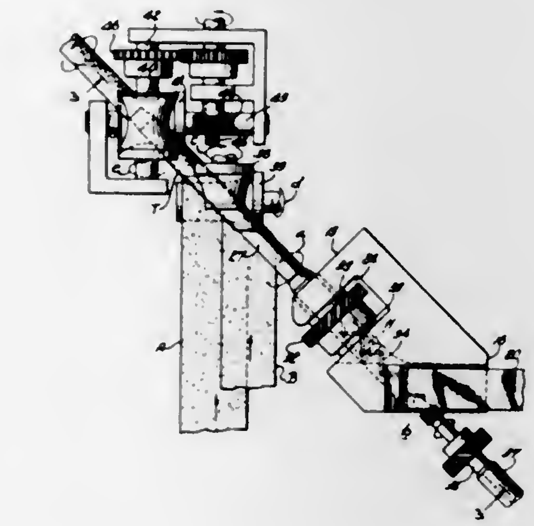

An apparatus for continuously producing a helically wound rod of tobacco includes a feed tube having an internal thread and a feed screw extending along the feed tube, the tube and screw being oppositely rotated to advance tobacco from the trailing through the discharge opening of the feed screw. A wrapper band is fed to the surface of the feed tube at an angle thereto and is advanced along the feed tube by a canted roll to form a longitudinal helically wound tube. Air outlet ports are formed in the wall of the feed tube underlying the wrapper band and a nozzle injects air into the tube trailing opening, the air flowing through the ports to provide a bearing for the wrapper band on the tube.

3,398,753
METHOD AND APPARATUS FOR ASSEMBLING MOUTHPIECES WITH TOBACCO RODS
Carl Stelzer, Reinbek, near Hamburg, Germany, assignor to Hauni-Werke Koerber and Co. K.G., Hamburg-Bergedorf, Germany
Filed Dec. 7, 1965, Ser. No. 512,144
Claims priority, application Germany, Dec. 7, 1964, H 54,492, H 54,493; June 19, 1965, H 56,345
39 Claims. (Cl. 131—88)

29. A method of assembling two types of prefabricated articles which respectively constitute mouthpieces and wrapped tobacco rods, comprising the steps of moving an article of each type sideways and in axial alignment with each other for a distance before and after a transfer station; and at said transfer station moving at least one of the two articles axially toward the other article so that

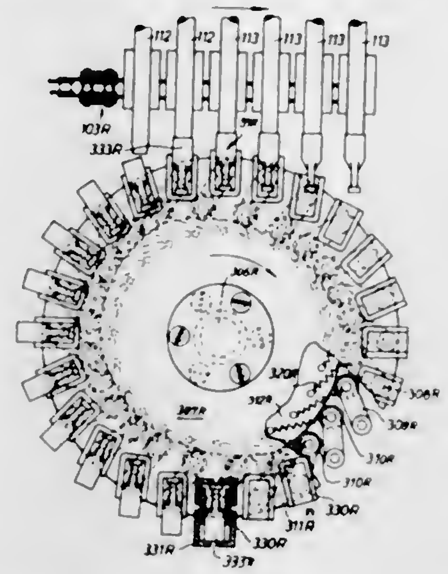

one extremity of the tobacco rod enters the adjoining end of the mouthpiece.

3,398,754
METHOD FOR PRODUCING A RECONSTITUTED TOBACCO WEB
Victor Denis Tughan, Belfast, Northern Ireland, assignor to Gallaher Limited, a British company
Filed June 27, 1966, Ser. No. 560,594
2 Claims. (Cl. 131—143)

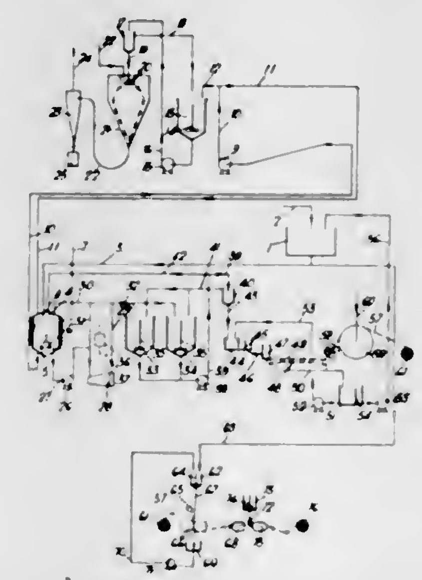

1. A method of producing a reconstituted tobacco web, said method comprising extracting from a sample of tobacco its water soluble components with water to form a solution, immediately feeding said solution to a spray drier whereby said solution is atomised and evaporated with hot air in said spray drier to form a powder tobacco extract, breaking up and refining the nonsoluble residue of said water extraction to form a fibrous mass, preparing a paper web from a suspension of said fibrous mass and coating at least one surface of said paper web with a concentrated solution of said powdered tobacco extract in water.

3,398,755
CARWASHING EQUIPMENT
John E. Hudson, Wooster, and Forest J. Swineford, Ashland, Ohio, assignors to Water Supplies, Inc., Ashland, Ohio, a corporation of Ohio
Filed Oct. 7, 1966, Ser. No. 585,077
2 Claims. (Cl. 134—58)

2. In carwashing equipment, endless loop track means, a washing carriage mounted on and movable in either direction around the endless track loop, means for driving the carriage around the loop in either direction, control means including a source of power and means for reversing the direction of movement of the drive means, a spray head mounted on and movable with the carriage, means for supplying washing liquid to the spray head during carriage movement, a collectorless power cable connected between the drive means and power control means, and the control means including means ac-

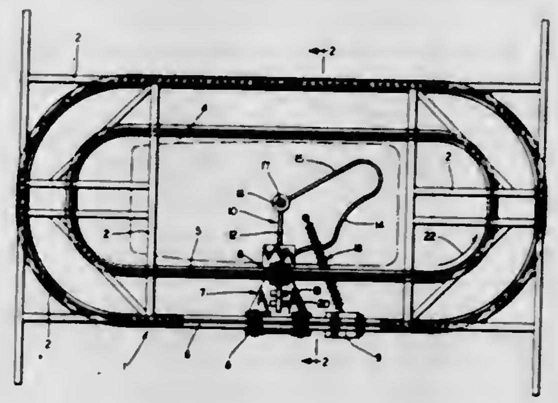

tuated upon arrival of the carriage at a stop station after movement of the carriage in one direction completely around the loop to stop carriage movement at the stop station and to operate the reversing means to reverse drive means movement to drive the carriage in the reverse direction completely around the loop; said arrival actuated means being mounted adjacent the stop station and actuated by the carriage, and being connected with the power cable and carriage drive means.

3,398,756
DISHWASHER HAVING IMPROVED VENT MEANS
Melvin R. Kauffman, Louisville, Ky., assignor to General Electric Company, a corporation of New York
Filed Oct. 13, 1966, Ser. No. 586,544
5 Claims. (Cl. 134—58)

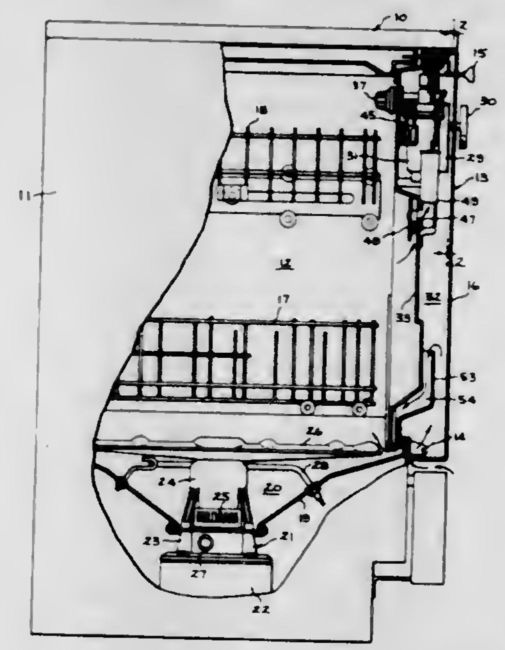

1. An automatic dishwasher comprising:
(a) a wash chamber adapted to receive and contain articles to be washed and dried therein,
(b) means to wash and rinse articles within said wash chamber,
(c) heat drying means to dry by evaporation articles within said wash chamber,
(d) treating agent dispensing means to dispense a treating agent into said wash chamber,
(e) said treating agent dispensing means including a movable member which moves as said dispensing means dispenses said treating agent,

(f) vent means including a relatively small opening to vent said wash chamber to the atmosphere,
(g) a closure member for said opening, and
(h) means interconnecting said closure member and said movable member to open said closure member as said dispensing means dispenses said treating agent.

3,398,757
INERTIA RESPONSIVE ANTISKID CONTROL VALVE
Arthur N. Milster, Richmond Heights, Mo., assignor, by mesne assignments, to Wagner Electric Corporation, a corporation of Delaware
Filed Sept. 28, 1965, Ser. No. 490,865
14 Claims. (Cl. 137—38)

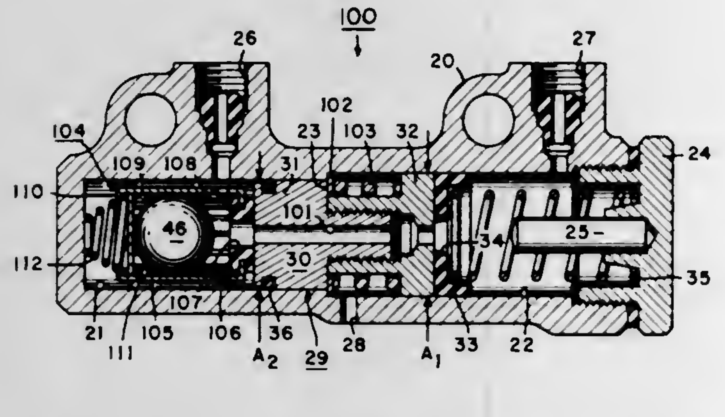

1. A control valve comprising a housing having a pair of ports therein, piston means having opposed ends movable in said housing between said ports, said opposed ends having differential effective areas respectively responsive to fluid pressure at said ports, passage means in said piston means through said opposed ends thereof and normally connecting said ports in pressure fluid communication, resilient means caged between said opposed ends and engageable with said housing, and inertia responsive means movable in said housing for controlling pressure fluid communication between said ports, said piston means being movable in a first direction compressing said resilient means between said housing and one of said opposed ends and disengaging the other of said opposed ends from said resilient means in response to established fluid pressure at said ports acting on said opposed ends differential areas to a stored energy position, said inertia responsive means being movable in response to a predetermined deceleration to a position closing said passage means and interrupting pressure fluid communication between said ports, and said piston means being thereafter movable in the opposite direction in response to increased fluid pressure at one of said ports acting on one of said opposed end areas and assisted by said resilient means release of stored energy until said other opposed end re-engages said resilient means to increase the fluid pressure at the other of said ports acting on the other of said opposed end areas in a predetermined ratio with the fluid pressure at said one port acting on said one opposed end area.

3,398,758
PURE FLUID ACOUSTIC AMPLIFIER HAVING BROAD BAND FREQUENCY CAPABILITIES
Happy Hugh Unfried, Los Angeles, Calif., assignor to Mattel, Inc., Hawthorne, Calif., a corporation of California
Filed Sept. 30, 1965, Ser. No. 491,724
21 Claims. (Cl. 137—81.5)

A pure fluid acoustic amplifier, transmitter and communication device is provided comprising means for generating a sound-sensitive free jet discharging into an ambient fluid, means for modulating the jet acoustically, oscillator means for obtaining an elastic carrier wave from the modulated free jet, means for transmitting the modulated elastic carrier wave in the ambient fluid toward a demodulator and means for receiving the trans-

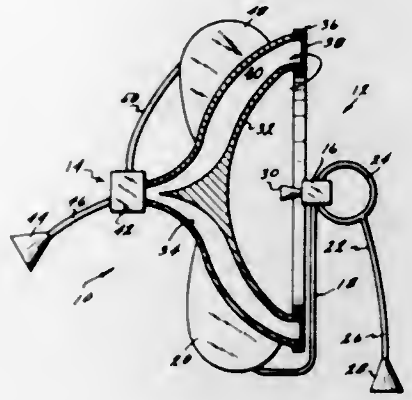

mitted carrier wave and demodulating it, thereby generating a reproduction of the original input acoustic signal. A modified form of the device includes means for establishing controlled negative or positive acoustic feedback, thereby allowing special control features.

3,398,759
VARIABLE FLUID IMPEDANCE AND SYSTEMS EMPLOYING SAME
Howard L. Rose, 8823 Lanier Drive, Silver Spring, Md. 20910
Continuation of application Ser. No. 269,074, Mar. 29, 1963. This application Oct. 21, 1965, Ser. No. 508,628
19 Claims. (Cl. 137—81.5)

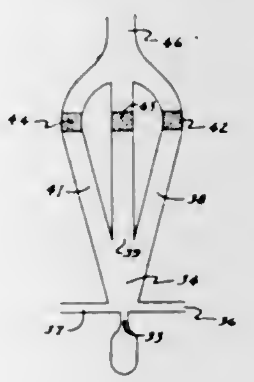

1. A variable pure fluid impedance comprising at least two output channels, an interaction region, means for directing fluid through said interaction region toward said output channels, means for developing in said interaction region a differential in pressure for deflecting said stream so as to vary the proportions of fluid directed to each of said output channels, means located in said output channels having different values of fluid impedance, said output channels being joined downstream of said fluid impedances to form a common output channel.

3,398,760
GAS LIFT VALVES
J. Boyd Fox and Charles Paul Lamb, Garland, Tex., assignors to Merla Tool Corporation, Garland, Tex., a corporation of Texas
Filed Feb. 1, 1966, Ser. No. 524,202
9 Claims. (Cl. 137—155)

A gas lift valve with a tubular mandrel, a sleeve slidably mounted in the mandrel and defining a port and a projection around the exterior of the sleeve below the port, a valve ring slidable between the mandrel and sleeve from a position above a port through the mandrel to

a position engaging the sleeve projection to shut off flow between the ports, a pressure responsive annular ring mounted in a chamber in the mandrel and connected to move the sleeve, the pressure responsive ring having a bleed passage therethrough which is partially blocked by a ring in one position and open in another position

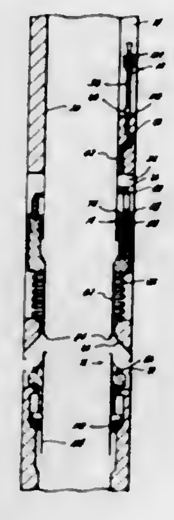

of the pressure responsive annular ring and a pilot valve controlling fluid pressure delivered to the chamber. This abstract is neither intended to define the invention of the application which, of course, is measured by the claims, nor is it intended to be limiting as to the scope of the invention in any way.

3,398,761
VALVE LEAKAGE DETECTOR
Marvin H. Grove, Piedmont, Calif., and Lyle R. Van Arsdale, Houston, Tex., assignors to M&J Valve Company, Houston, Tex., a corporation of Delaware
Filed May 9, 1966, Ser. No. 548,724
8 Claims. (Cl. 137—312)

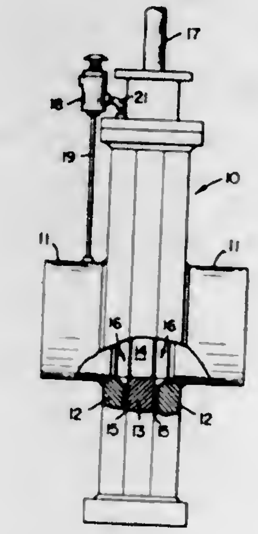

A leakage detector for valves of the type having sealing means surrounding the inlet and outlet valve flow passages. A vent valve connects with the closed body space of the valve and is operated to vent the body space to atmosphere. A means serves to detect any leakage of line fluid into the body space, immediately after such venting.

3,398,762
VALVES
John V. Fredd, Dallas, Tex., assignor to Otis Engineering Corporation, Dallas, Texas, a corporation of Delaware
Filed Oct. 21, 1965, Ser. No. 499,478
30 Claims. (Cl. 137—495)

Ball valves rotatable about more than one axis during movement between open and closed positions. Operator means cooperably engageable with the ball of said

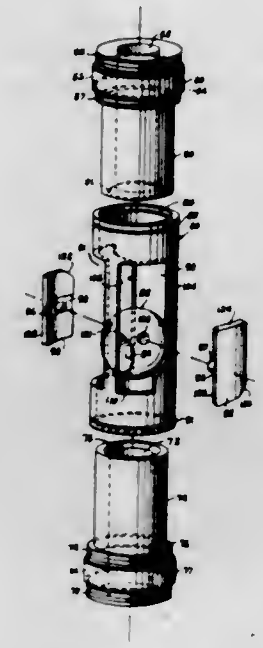

ball valves to rotate said ball about more than one radial axis thereof.

3,398,763
BALL VALVE
Cecil Graham Francis Richards, Aspley, Brisbane, Queensland, Australia, assignor to B. C. Richards & Co. Pty. Ltd., Geebung, Brisbane, Queensland, Australia
Filed Sept. 10, 1965, Ser. No. 486,357
Claims priority, application Australia, Sept. 11, 1964, 49,232/64
5 Claims. (Cl. 137—553)

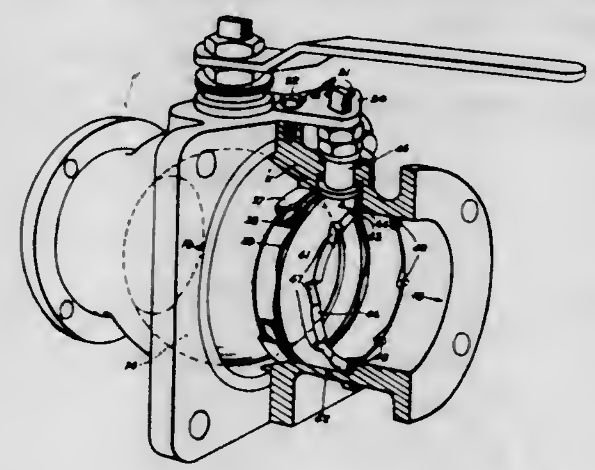

A ball valve has a wear take-up mechanism on its sealing ring including coacting wedge-shaped grooves and corresponding protuberances between a take-up ring and a radial face of a rebate in the casing surrounding inlet or outlet. The take-up ring is rotated about its axis by take-up means, operable independently of the valve control means from outside the casing. The take-up means may have an indicator for the extent of wear on the sealing ring.

3,398,764
SWITCH VALVE, ESPECIALLY MAGNET VALVE WITH SUB-DIVIDED HOUSING PARTS WHICH ARE DETACHABLE FROM EACH OTHER
Erich Herion, Distlerstrasse 22, Stuttgart-Frauenkopf, Germany
Continuation of application Ser. No. 431,249, Feb. 9, 1965. This application Jan. 22, 1968, Ser. No. 699,741
8 Claims. (Cl. 137—614)

A control valve having a base portion provided with an inlet and two outlets for connection to a source of

pressure fluid, to a return line, and to the hydraulic apparatus controlled by the valve, and a cover portion enclosing the working elements of the valve. When the cover portion is secured to the base portion, three orifices of the cover portion are sealingly engaged with three orifices on the base portion, two of which are connected by permanently open compartments with the outlets of

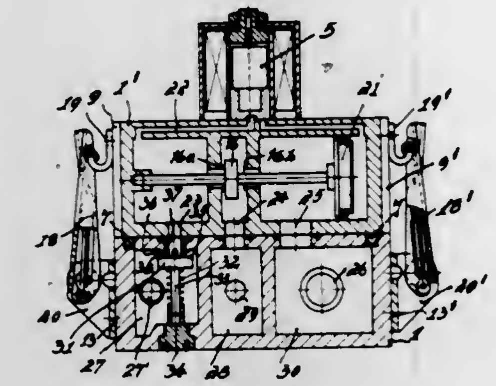

the base portion. A normally closed check valve between the third orifice and the inlet of the base portion is opened when the cover portion is set on the base portion. The two portions are attached to each other by manually releasable fasteners.

3,398,765

BENT PIPE WAY HAVING IMPROVED FLOW CHARACTERISTICS

Ryoichiro Oshima and Keiichi Hanawada, Hitachi-shi, Japan, assignors to Hitachi, Ltd., Tokyo, Japan, a corporation of Japan

Filed Jan. 14, 1964, Ser. No. 337,570

Claims priority, application Japan, Jan. 18, 1963, 38/1,461

4 Claims. (Cl. 138—39)

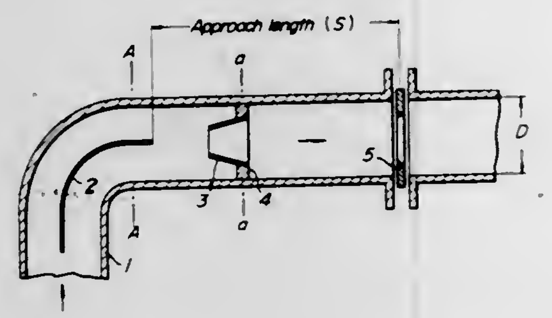

1. A flow improvement device which comprises;
(a) a pipe way, with a bend therein
(b) a pressure difference device for flow metering located within said pipe way and downstream from said bend
(c) a guide plate secured in the bend in said pipe way and extending completely across a diameter of said pipe way for reducing the circumferential velocity components of a fluid flowing in said pipe way; and
(d) an open ended frusto-conical element substantially concentrically mounted within said pipe way and located downstream from said bend and upstream from said pressure difference device with the large end thereof directed downstream for increasing the flow velocity of the fluid stream around the outer surface of the pipe way.

3,398,766

DEVICE HAVING A THREAD TENSIONER FOR WEAVING SHUTTLES FOR THREADING WEFT THREADS

Emil Forster, Hinwil, near Zurich, Switzerland, assignor to Firm Emil Forster A.G., Hinwil, near Zurich, Switzerland

Filed June 29, 1965, Ser. No. 468,012

Claims priority, application Germany, July 4, 1964, F 43,338; June 5, 1965, F 46,257

1 Claim. (Cl. 139—217)

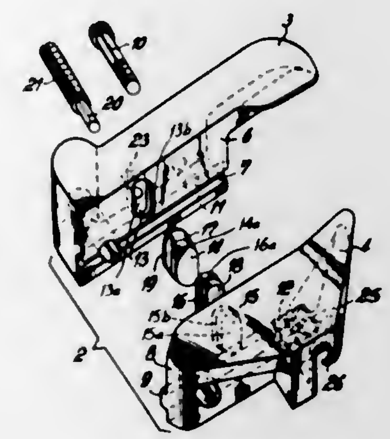

The invention provides a thread tensioning device for a weft thread shuttle where the carrying body is made of two parts with cheeks having opposite recesses, each having an enlarged portion proximate the cheek, and with brake jaws having a box-shaped member and an elastic intermediate member, one portion of which is encompassed by the box-shaped member and another portion which extends into the recess, while the box-shaped member is received in the enlarged portion.

3,398,767

CLAMPING DEVICE FOR JACQUARD CARDS

Ludwig Trageser, 26 Hunefeldstrasse, Hamburg 70, Germany

Filed Mar. 3, 1967, Ser. No. 620,499

Claims priority, application Germany, Oct. 12, 1966, M 56,575; Oct. 15, 1966, M 56,608

5 Claims. (Cl. 139—317)

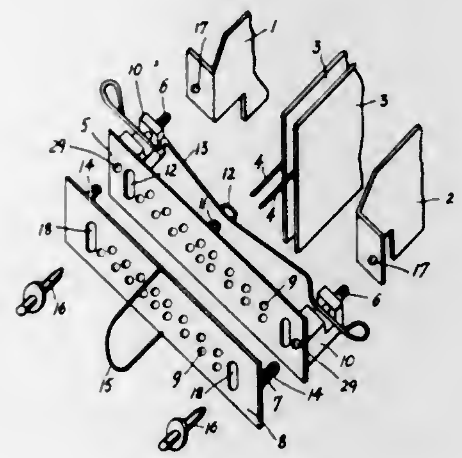

A clamping device for receiving punched Jacquard pattern cards comprising two parallel perforated clamping plates arranged on the changing frame in such a manner that the outer plate is resiliently mounted to provide a clamping action against the thrust of the reading pins so as to increase the life of the punched pattern cards.

3,398,768

WIRE STRAIGHTENING APPARATUS

Albertus Judocus Franciscus Maria Van Hoof, Eindhoven, Netherlands, assignor to North American Philips Company, Inc., New York, N.Y., a corporation of Delaware

Filed July 20, 1966, Ser. No. 566,572

Claims priority, application Netherlands, Aug. 5, 1965, 6510161

5 Claims. (Cl. 140—147)

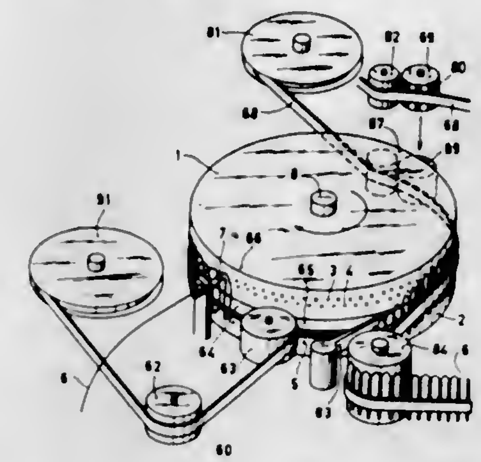

Apparatus for straightening lengths of wire comprising two drums of equal diameter arranged one adjacent the other with their axes offset relative to each other so that the spacing between the confronting edges of the drum is progressively increased. Each drum is provided with a plurality of pins regularly distributed over the peripheral surfaces of the drum and wire guide means are provided for continuously feeding wire to coacting pins of the drum. By rotating both drums at the same speed in the same direction, the distance between coacting pins progressively increases thereby straightening the wire held between the pins.

3,398,769

LIQUID GAS FILLING VALVE

Andre L. Guenin, Petit-Lancy, Geneva, Switzerland, assignor to La Nationale S.A., Geneva, Switzerland

Filed June 2, 1966, Ser. No. 554,749

Claims priority, application Switzerland, June 11, 1965, 8,186/65

7 Claims. (Cl. 141—293)

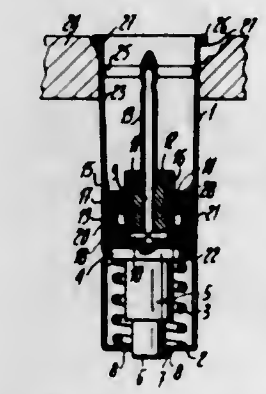

1. In a valve for filling a container with liquefied gas including an outer casing adapted to be secured in an aperture in the wall of a container, a movable valve element reciprocably mounted in said casing in radial spaced relationship therewith for movement between a first and second position along the longitudinal axis of said casing, a first passage extending at least partially through said movable valve element for connecting the interior of said container to the exterior thereof when said valve element is in said second position, a first annular gasket positioned in said casing in sealing engagement against said movable valve element when the latter is in said first position to seal said first passageway, the improvement comprising:
(a) a second annular gasket positioned within said casing at a location spaced from said first gasket along the longitudinal axis of said casing;
(b) a second passage extending through said casing at a location disposed between said gaskets and extending to the exterior of said container for connecting the interior thereof to the exterior when said valve element is in said second position; and
(c) a ring member positioned within said casing between said gaskets and in engagement therewith when said valve element is in said first position to normally hold said second gasket in a position sealing said second passage, said ring member being movable relatively away from at least one of said gaskets upon movement of said valve element to said second position to open said second passage.

3,398,770

CHAIN SAW APPARATUS

Alvin Huff, Dubuque, Iowa, assignor to R. S. Bacon Veneer Company, Chicago, Ill., a corporation of Illinois

Filed July 8, 1966, Ser. No. 563,772

7 Claims. (Cl. 143—32)

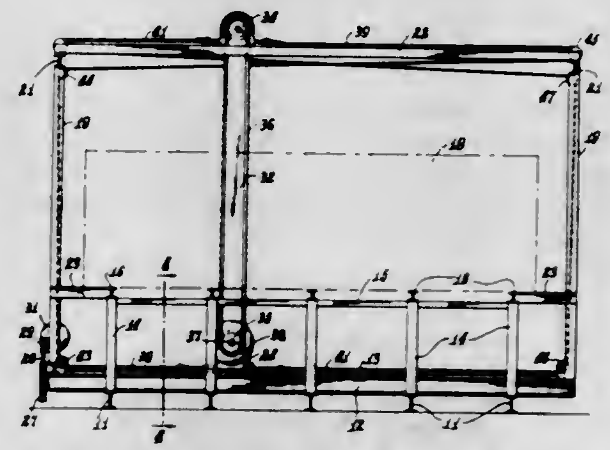

A chain saw apparatus characterized by a work support surface through which a vertically arranged chain saw and frame extends and wherein the frame is guided on tracks at both ends and its advance along said tracks is positively controlled at all times by a connecting cable.

3,398,771

PORTABLE DIMENSIONAL CUTTING SAW APPARATUS

Jim May, 12110 SE. Pine, Portland, Oreg. 97216

Filed Mar. 28, 1966, Ser. No. 537,835

16 Claims. (Cl. 143—38)

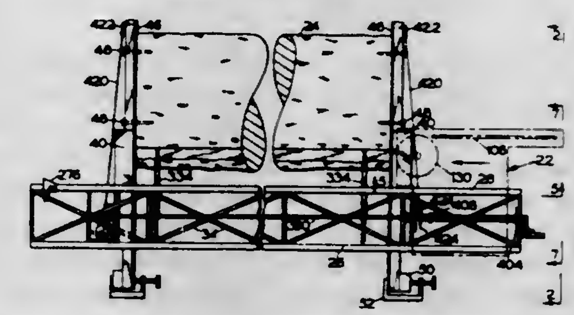

1. A portable dimensional cutting saw apparatus comprising
(a) an elongated frame,
(b) a saw carriage movable on said frame,
(c) rail means adapted to be mounted in a stationary position adjacent each end of the log,
(d) said rail means having means for supporting the frame longitudinally of the log and for movement in a direction extending transversely of the log,
(e) at least two saws mounted on said carriage and operable to cut a strip from the log upon movement of the carriage over said frame,
(f) and means on said carriage arranged for engagement with a log for guiding at least one of said saws in its depth of cut into the log.

3,398,772
PROTECTIVE CANOPY FOR SLIDING TABLE SAW
Louis Klein, 569 Sheppard Ave. W., Apt. 1202, Downsview, Ontario, Canada
Filed June 20, 1966, Ser. No. 558,732
6 Claims. (Cl. 143—159)

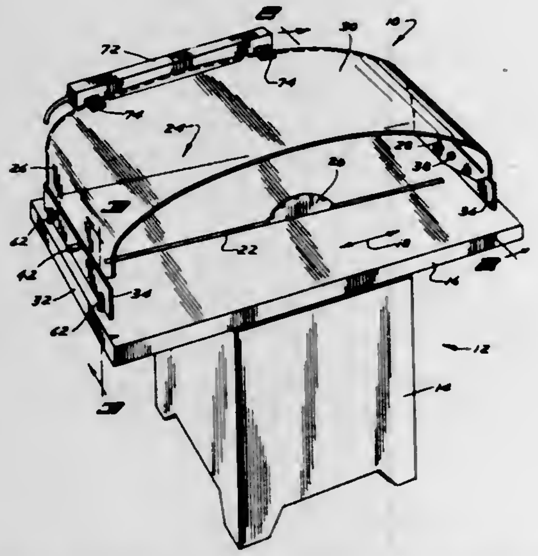

A protective canopy for a sliding table saw comprised of a resilient, transparent panel longitudinally bridging the saw slot in the table; the canopy being flexed for detachable mounting on the table and being pivotal about a longitudinal axis.

3,398,773
LEAD SHARPENER
Gerald Wilhelm Dahle, Marienberg 19, Coburg, Bavaria, Germany
Filed Aug. 2, 1966, Ser. No. 569,636
Claims priority, application Germany, July 12, 1966, D 50,533
2 Claims. (Cl. 144—28.1)

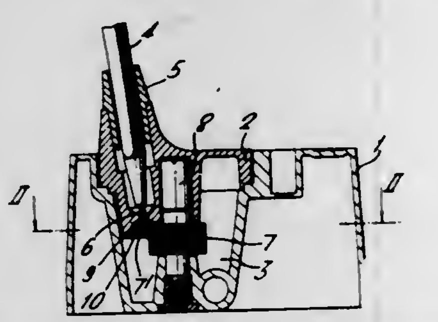

1. A lead sharpener comprising a housing, a cylindrical steel milling cutter nonrotatably mounted in said housing, a lead-holder guide mounted on said housing so as to be rotatable about the axis of said cutter and having an axis inclined to said cutter axis, and an insert of a highly wear-resistant material rigidly secured to said lead-holder guide and having a conical lead-guiding channel which is cut open at one side facing said cutter.

3,398,774
TREE HARVESTER
Raymond M. Hahn, Schroeder, Minn. 55613
Filed June 2, 1966, Ser. No. 554,890
28 Claims. (Cl. 144—309)

A tree harvester comprising a supporting framework with a horizontal bed having a dolly mounted thereon for reciprocating movement over the extent of the same. The dolly mounts two pairs of curved plates which are pivotally mounted on the dolly and which selectively open to receive a tree trunk and close to grip a tree trunk for the purpose of moving a tree trunk on the dolly over the bed with movement of the dolly in one direction and to debranch the tree trunk with movement of the dolly in the opposite direction after the tree trunk has been gripped by a gripping means on the framework. The grip-

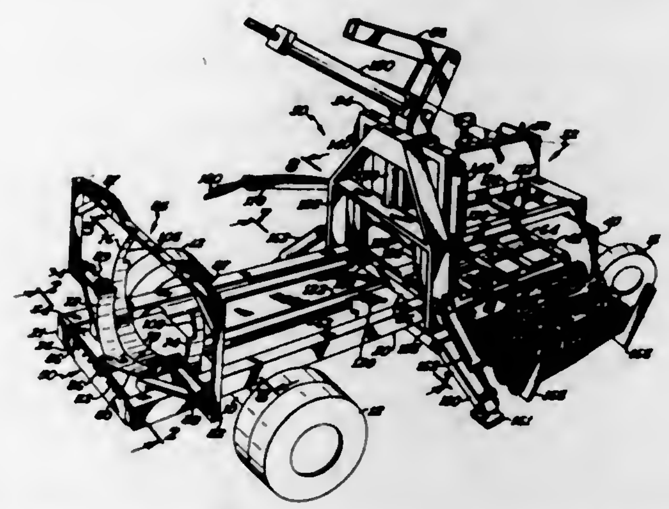

ping means has associated therewith a tree trunk severing means and the framework includes a structure for ejecting the severed logs from the supporting framework.

3,398,775
SKEW WASHER LOCKNUT
Louis H. Morin, Bronx, N.Y., assignor to Coats & Clark Inc., New York, N.Y., a corporation of Delaware
Filed July 12, 1966, Ser. No. 564,653
6 Claims. (Cl. 151—15)

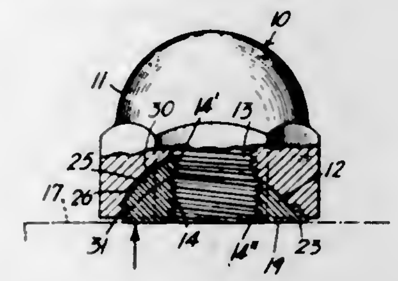

A two-piece locknut assemblage wherein a "skew" washer portion thereof is designed to jam against the threads of a bolt or other screw threaded element to which the nut is attached when the nut is screwed against a flat surface.

3,398,776
WHITE SIDEWALL FOR BUTYL PASSENGER TIRES
Emmett Burton Reinbold, Cuyahoga Falls, Ohio, assignor to The General Tire & Rubber Company, a corporation of Ohio
Filed Oct. 21, 1965, Ser. No. 499,611
3 Claims. (Cl. 152—353)

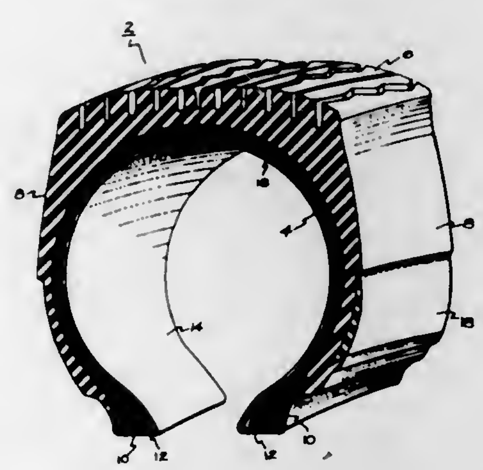

A white sidewall composition formulated primarily from butyl rubber and preferably including a minor amount of chlorosulfonated polyethylene is improved by the addition of a polyethylene having an average molecular weight of between about 1,000 and about 5,000. The polyethylene is added in an amount of between about 10 and 30 parts per 100 parts of rubber.

3,398,777
STOP LIMIT MEANS FOR POWER OPERATED TIRE CHANGER
Elmer J. Strang, Fort Dodge, Iowa, assignor to The Coats Company, Inc., a corporation of Iowa
Filed June 27, 1966, Ser. No. 560,753
7 Claims. (Cl. 157—1.28)

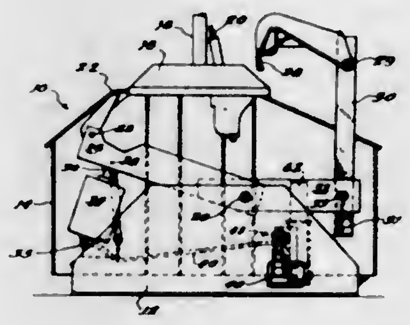

Stroke limiting means for use in tire changing stands having bead breaker shoes mounted on arms connected to motor means for moving the arms, the motor means being connected to a control means intermediate the motor and the source of power for the motor, characterized in that the control means is manually or pedally movable between a power supply and a power off position and connected to a member which intersects the path of travel of a bead breaker shoe arm, so that after a predetermined amount of travel, the arm will assert a force on the member tending to move the control means toward the power off position in opposition to the operator effort necessary to hold the control means in the power supply position.

3,398,778
ADJUSTABLE AWNING
Wesley A. Veach, Jr., 318 Hillside, Richardson, Tex. 75080, and Ivan Guthrie, Rte. 1, Box 281FF, Grand Prairie, Tex. 75050
Filed Apr. 15, 1966, Ser. No. 542,799
4 Claims. (Cl. 160—45)

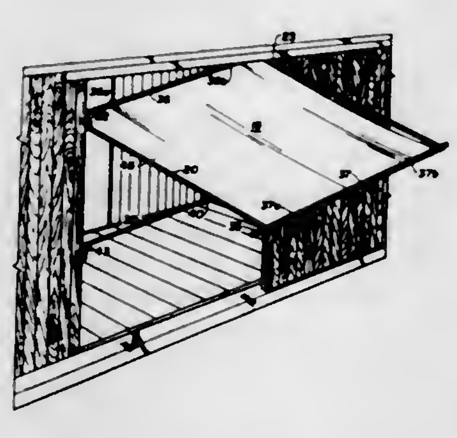

An adjustable awning which can be varied in width to permit adapting of the awning to doorways of different widths. The awning is further adapted to be easily installed in a canted position within the doorway by attaching means loosely affixed to at least one of the awning support bars.

3,398,779
FLEXIBLE DOOR FOR BUILDING CLOSURES
Ralph L. Kuss, Findlay, Ohio, assignor to R. I. Kuss & Co., Inc., Findlay, Ohio, a corporation of Ohio
Filed Dec. 21, 1966, Ser. No. 603,598
10 Claims. (Cl. 160—243)

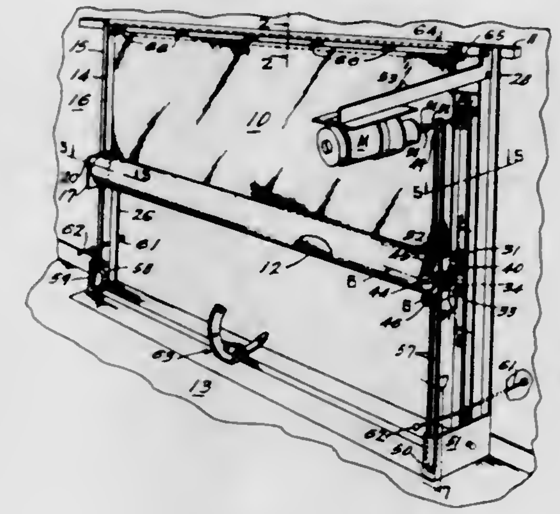

This invention relates to an improved flexible door for large building closures, such as aircraft hangars, gymnasiums or the like. More specifically, this invention relates to a flexible closure of the type which includes a flexible membrane secured to an overhead building member with a roller secured to the membrane whereby rotation of said roller will open and close the door.

3,398,780
CONTINUOUS CASTING OF TUBES
Douglas C. Yearley, Westfield, N.J., assignor to Phelps Dodge Copper Products Corporation, New York, N.Y., a corporation of Delaware
Filed July 1, 1965, Ser. No. 468,771
8 Claims. (Cl. 164—49)

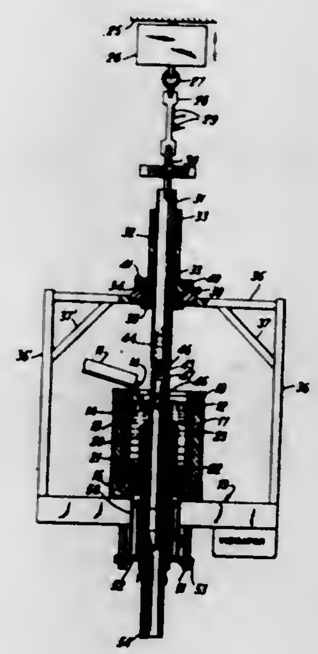

Continuous casting of tubes by solidfying molten material as it is withdrawn from a solidification zone defined by the insertion of a central mandrel into the exit aperture of a liquid zone to create an annular aperture of adjustable dimensions to control the characteristics of the cast product.

3,398,781
EJECTION MECHANISM FOR MOLDING APPARATUS
Burton L. Bevis, Peoria, Ill., assignor to Caterpillar Tractor Co., Peoria, Ill., a corporation of California
Filed May 2, 1966, Ser. No. 546,961
2 Claims. (Cl. 164—228)

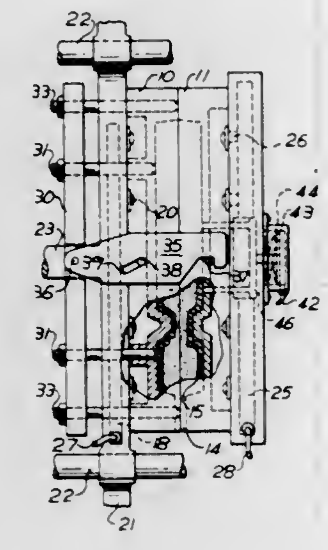

Means to manufacture shell molds for foundry use which are made in core boxes and particularly means for insuring proper removal of cured shell molds upon separation of the core boxes in which they are made.

3,398,782
AUTOMATIC LADLING DEVICE
Gustav Lauterjung, Schloss Str. 18, Solingen-Wald, Germany
Filed Mar. 1, 1965, Ser. No. 436,258
Claims priority, application Germany, Feb. 28, 1964, L 47,167; Aug. 11, 1964, L 48,513
1 Claim. (Cl. 164—336)

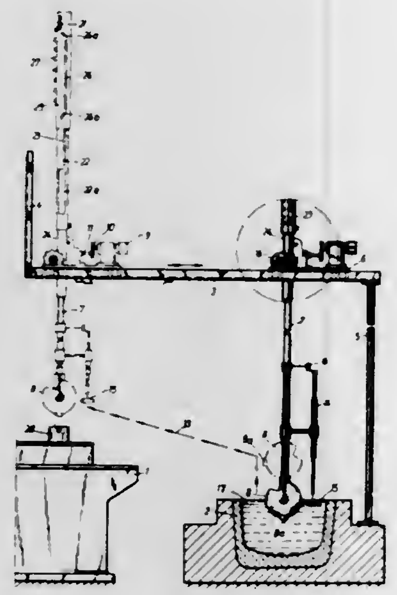

1. In an automatic ladling device, for use in transferring molten metal from a metal bath in a holding vessel to a mold disposed at a distance from said holding vessel and at a different elevation from the level of the bath in said holding vessel, the combination of a frame, a ladle, transport means for said ladle comprising a support horizontally movable on said frame for transporting said ladle between said bath and mold, a vertically movable tubular part supported by said support and including a lower portion, said ladle being tiltably connected to said lower portion of said vertically movable tubular part, said ladle including a closed hollow body having a metal interchange opening and another opening opposite thereto, said openings remaining open at all times, moving means operable for raising and lowering said tubular part and therewith said ladle and being operative for lowering said ladle into said metal bath, said ladle at least during a part of its descent into said metal bath being in a first tilted position for metal carrying wherein said openings are disposed opposite each other substantially horizontally, control means comprising a float connected to said tubular part and being operable to make contact during its descent with the level of said molten metal in said metal bath and thereupon to de-energize said motor for halting said lowering movement, and tilting means being operable for tilting said ladle between said first tilted position and a second tilted position, for metal interchange, at about right angles to said first tilted position and in which the metal interchange opening is positioned downwardly, said tilting means including a shaft vertically movable with, but rotatable relative to, said tubular part, gearing between the lower portion of said shaft and said ladle, a tubular prolongation supported from said support and being relative thereto non-rotatable and immovable vertically and surrounding the upper portion of said shaft and having a first cam slot including an upper narrow portion and a lower wide portion, a sleeve surrounding said tubular prolongation and being axially movable, though non-rotatable, relative thereto and having a second cam slot including a narrow upper portion similar to that of said first cam slot and a lower narrow portion, said shaft including a cam follower pin protruding simultaneously through both said cam slots, said second cam slot of said sleeve including near the bottom of the narrow portion an inclined section, and magnets positioning adjustably said sleeve on said tubular prolongation operable for placing the inclined section of said second slot of said sleeve in front of a selected part of said wide portion of said first slot of said tubular prolongation for determining the instant of tilting of said ladle from said first to said second, metal interchange, position.

3,398,783
METAL FOUNDRY LAYOUT USING PERMANENT MOLDS
Orville J. Stender, Crete, Ill., assignor to Conlon-Moore Corporation, a corporation of Delaware
Filed Apr. 4, 1966, Ser. No. 539,807
8 Claims. (Cl. 164—348)

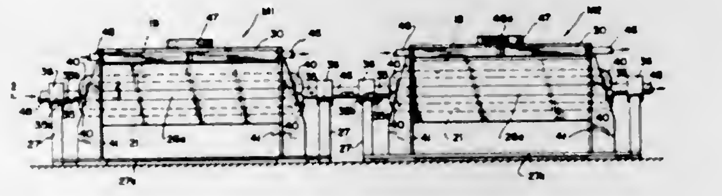

A foundry layout for metal casting in which a plurality of permanent mold assemblies are arranged end to end in spaced relationship, with each mold assembly consisting of a one-piece block of refractory material provided with a mold cavity, a one-piece cope of refractory material which rests on the top surface of the block, coolant bores extending from end to end of each block and each cope, and conduit means connecting the coolant bores in all the blocks in series with a liquid coolant source and further conduit means connecting the coolant bores in all the copes in series with a liquid coolant source. Preferably a one-piece mold block has mold cavities in two faces and is supported for rotation to position either of the two faces uppermost so that the cope may provide a closure for either cavity.

3,398,784
METHOD OF HEAT EXCHANGE WITH HIGH VISCOSITY LIQUIDS
James W. Smith, Leaside, Ontario, and Robert A. Gowen, Toronto, Ontario, Canada, assignors to The Electric Reduction Company of Canada, Ltd., Toronto, Ontario, Canada
Filed Sept. 12, 1966, Ser. No. 578,675
Claims priority, application Great Britain, Sept. 13, 1965, 38,962/65
9 Claims. (Cl. 165—1)

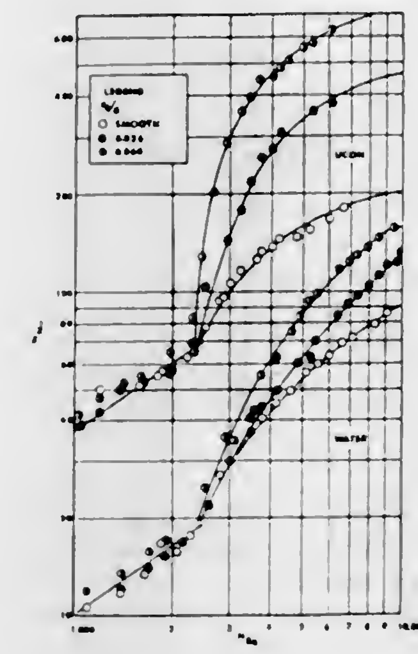

A method of effecting heat exchange with a liquid having a Prandtl number of at least 30, e.g., polyalkylene glycol, in which the liquid is passed under conditions of non-laminar flow, i.e., in the region between laminar and fully turbulent flow, through hydrodynamically rough heat exchange channels.

3,398,785
COMBINATION HEATING AND COOLING UNIT
Robert V. Anderson, 707 Stemmons Tower East, 2700 Stemmons Freeway, Dallas, Tex. 75207
Filed June 3, 1966, Ser. No. 555,128
9 Claims. (Cl. 165—29)

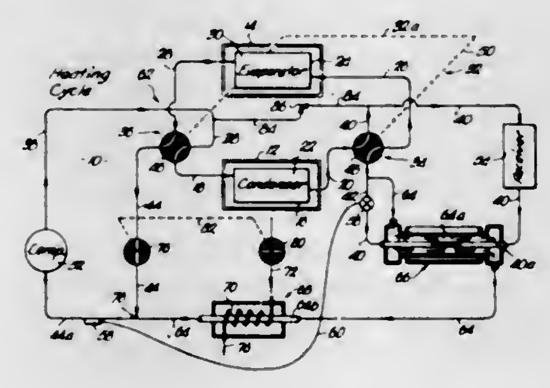

A temperature control unit having in combination with a compressor and fluid restriction means, a first and a second heat exchanger and a selective valve operable to cause the first heat exchanger to operate as a condenser when the unit is used as a heater and as an evaporator when the unit is used as a cooler, with the second heat exchanger operating as an evaporator when the unit is used as a heater and as a condenser when the unit is used as a cooler. A third heat exchanger adds heat to the fluid flowing to the restriction means and decreases the heat content of the fluid flowing through the restriction means. A bypass for the first and second heat exchangers, while acting as a condenser, continues to supply heat to the third heat exchanger when fluid flows through the bypass. A heater for raising the temperature of the fluid when required is provided with a fuel control that is operably coupled with a variable restrictor for restricting the flow of fluid from the selective valve to the compressor.

3,398,786
HEAT EXCHANGER SUPPORT ASSEMBLY
John C. McNabney, La Crosse, Wis., assignor to The Trane Company, La Crosse, Wis., a corporation of Wisconsin
Filed Nov. 30, 1966, Ser. No. 597,953
1 Claim. (Cl. 165—55)

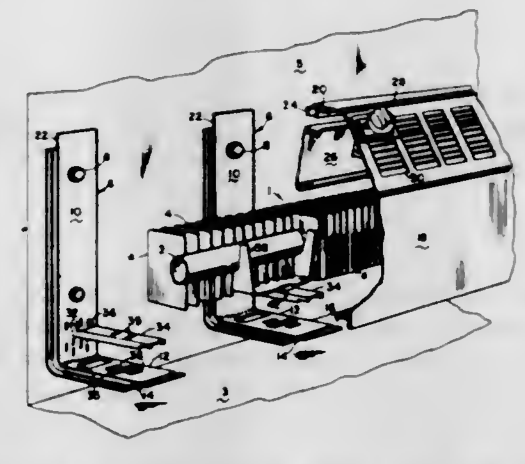

Apparatus for supporting a finned tube heat exchanger in such a way as to permit the noise-free thermal expansion and contraction thereof. A plurality of horizontally extending support arms are mounted at spaced intervals along a wall and are provided with slots in their top surfaces in which plastic bearing elements are snapped-in-place. The heat exchanger tube extends transversely of the support arms and is supported at spaced points along its length by cradle elements, each of which has a base slidably positioned in the plastic bearing elements on one of said support arms.

3,398,787
EXPANSION AND CONTRACTION MEANS FOR A HEAT EXCHANGER
James William Bevevino, Warren, Pa., assignor to Struthers Wells Corporation, a corporation of Maryland
Filed Oct. 11, 1966, Ser. No. 585,916
2 Claims. (Cl. 165—81)

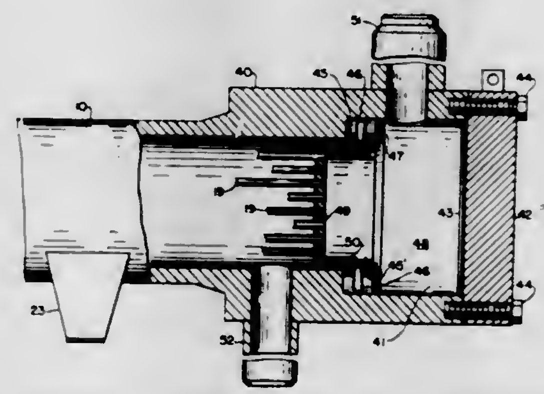

A shell and tube type heat exchanger having a longitudinal bore and first and second ends. The second end contains and terminates in an enlarged chamber. A first tube sheet is fixed in the first end of said shell. A tubu-

lar extension extends into the enlarged chamber and includes an outwardly extending expansion joint in the tubular extension. A tubular skirt extends through the extension and the outer end of the skirt is fixed to the outer end of the extension. A guide ring is fixed to the outer ends of the skirt and the extension is slidably disposed within the chamber. A second tube sheet is fixed to the inner end of the skirt and is slidably disposed within the bore.

3,398,788
HEAT EXCHANGE TUNNEL
Bruce W. Brunson, Grand Rapids, Mich., assignor to Werner Machinery Co., Grand Rapids, Mich., a corporation of Michigan
Filed June 6, 1966, Ser. No. 555,392
5 Claims. (Cl. 165—120)

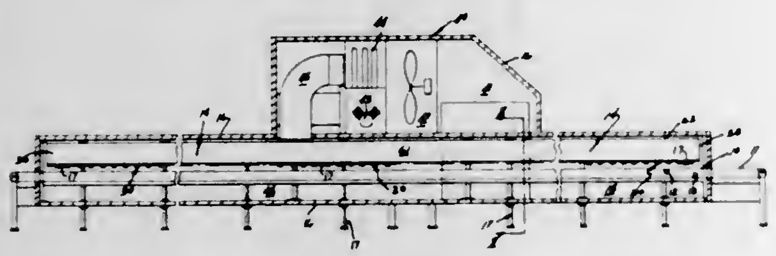

In a heat exchange tunnel for cooling or heating articles, an air pervious belt is provided for carrying the articles. Above the belt is a pressure duct and below a suction chamber. A heat exchange and pressure unit supplies heated or cooled air to the pressure duct which has a plurality of spaced, jet nozzles with jet orifices extending across the belt. The jet orifices provide a plurality of curtain-like jets which impinge on the articles to cool the same.

3,398,789
HEAT EXCHANGERS FOR PRESSURE REACTING FLUIDS
Walter Wolowodiuk, Flushing, N.Y., and Robert J. Zoschak, Rutherford, N.J., assignors to Foster Wheeler Corporation, New York, N.Y., a corporation of New York
Filed Jan. 25, 1965, Ser. No. 427,666
3 Claims. (Cl. 165—134)

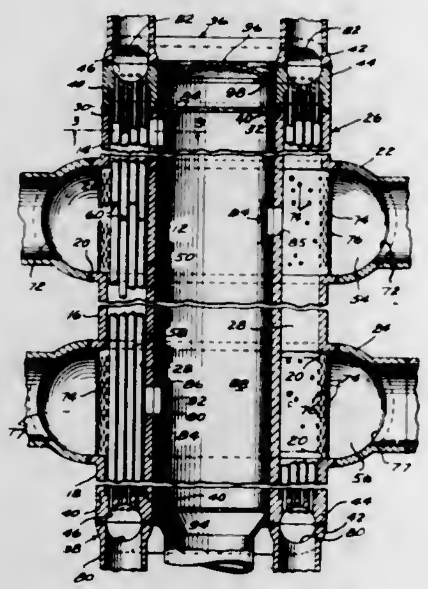

A heat exchanger including an inner cylindrical region for confining a heat exchange fluid and an outer cylindrical region concentrically disposed with respect to the inner region. The inner region is formed with rupture openings surrounded by a groove for receiving a rupture membrane designed to withstand normal operating pressures and to rupture at a predetermined excess pressure.

3,398,790
UNDERWATER DRILLING METHOD
Charles E. Wakefield, Jr., Long Beach, Calif., assignor to Atlantic Richfield Company, a corporation of Pennsylvania
Filed May 7, 1965, Ser. No. 454,019
4 Claims. (Cl. 166—.5)

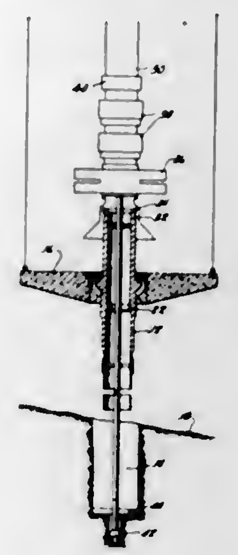

Method for landing a casing pipe in an underwater drilling apparatus which comprises landing a conductor pipe, a conductor mandrel and a riser in a well, then drilling out below the conductor pipe and lowering a surface casing through the riser and conductor mandrel and landing a shoulder on the surface casing on a mating shoulder portion within the conductor mandrel. If desired the surface casing can contain inwardly projecting shoulder portions therein for landing further casings therein.

3,398,791
OIL RECOVERY PROCESS WITH SURFACE-ACTIVE AGENTS FORMED IN SITU BY INJECTION OF GASES
Billy G. Hurd, Dallas, Tex., assignor to Mobil Oil Corporation, a corporation of New York
No Drawing. Filed Dec. 22, 1966, Ser. No. 603,720
18 Claims. (Cl. 166—9)

1. In the production of oil from a subterranean oil reservoir containing water therein and penetrated by spaced injection and production systems defining a recovery zone of said reservoir, the method comprising:

(a) introducing into said recovery zone of said reservoir and into contact with water within said recovery zone gaseous sulfur dioxide and an oxygen-containing gas whereby there is produced within said recovery zone sulfuric acid which reacts with constituents of said oil to produce surface-active organic sulfoxy acids,

(b) thereafter introducing into said recovery zone via said injection system an aqueous flooding medium to displace oil to said production system, and

(c) recovering oil from said production system.

3,398,792
LIQUID FLOW IN A PERMEABLE EARTH FORMATION
Milton K. Abdo, Dallas, Tex., assignor to Mobil Oil Corporation, a corporation of New York
Original application Mar. 16, 1964, Ser. No. 351,936. Divided and this application Nov. 23, 1966, Ser. No. 623,149
5 Claims. (Cl. 166—9)

This specification discloses a method of treating a subterranean formation by passing into and flowing in the formation a liquid which is either positive nonsimple, shear hardening, or both. In specific embodiments, various liquids, both miscible and immiscible, are employed as flooding liquids and flowed from an injection well within the formation toward a production well to recover a large portion of the oil from the subterranean formation. By the rheological properties of shear hardening and/or positive nonsimplicity, the flooding liquids correct for permeability in homogeneities as well as instability effects. Illustrative of the immiscible liquids having the desired

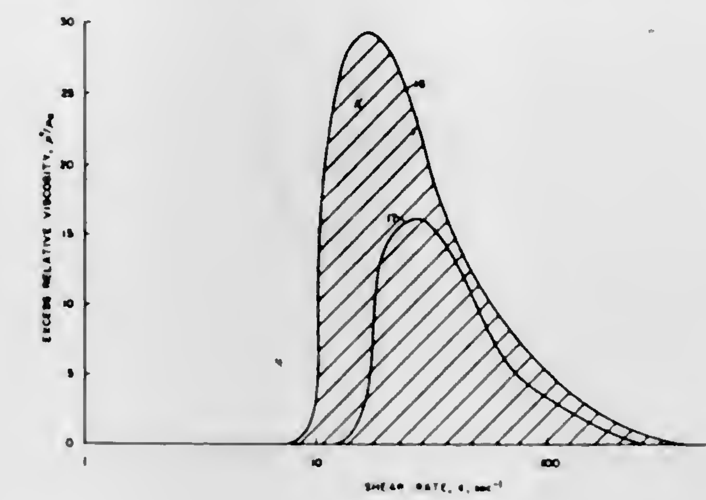

rheological properties are aqueous solutions of alkaline soaps of fatty acids with electrolyte present where appropriate, aqueous solutions of copper cetyl phenyl ether sulfonate, and aqueous solutions of acid soap and acid; such as, hexadecylamide hydrochloride and hydrochloric acid. Illustrative of the miscible liquids having these rheological properties are hydrocarbon solutions of aluminum soaps of fatty acids or of naphthenic acids, or solutions containing at least 2 percent by weight nitrocellulose dissolved in n-butyl acetate.

3,398,793
PROCESS FOR RAPID REIGNITION OF IN SITU COMBUSTION
Harry W. Milton, Jr., Denver, Colo., assignor to Marathon Oil Company, Findlay, Ohio, a corporation of Ohio
No Drawing. Filed May 27, 1966, Ser. No. 553,317
8 Claims. (Cl. 166—39)

The present invention comprises a method for reigniting a combustion zone in an organic-bearing formation comprising in combination the steps of injecting into a formation having a burned-out zone and an unburned organic-bearing zone, a quantity of a flammable gaseous mixture comprising oxygen and a fuel at least sufficient to substantially fill said burned-out zone, thereafter igniting said flammable mixture through at least one well located in said burned-out zone and located at least 10 feet from the interface between said burned-out zone and said organic-bearing zone, so as to produce a gas combustion front which passes through a portion of the burned-out zone and reignites the carbonaceous material in place at the interface, between said burned-out zone and said organic-bearing zone.

3,398,794
APPARATUS FOR RUNNING LARGE DIAMETER CASING
James E. Fox, Jr., Fort Worth, Tex., assignor to Pan American Petroleum Corporation, Tulsa, Okla., a corporation of Delaware
Filed Oct. 3, 1966, Ser. No. 583,537
4 Claims. (Cl. 166—67)

This invention concerns the lowering of a large diameter casing into a water containing borehole drilled into the earth. In casing having diameters of 48 inches or larger, the weight of the casing is many times that of the smaller casings so it is desired to "float" the larger casing. However, the walls have lower collapse pressure than smaller casing for the same wall thickness. Means are provided to construct chambers within the casing and to maintain sufficient pressure therein to prevent collapse of the casing

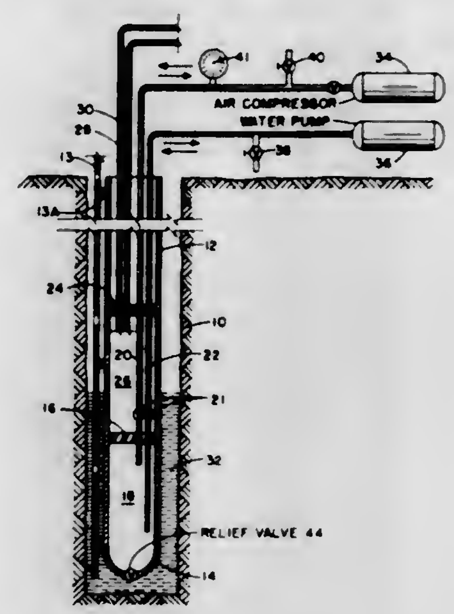

as it is lowered through a hole of water. As the casing is lowered into the hole, fluid in the compartment is maintained at a pressure at least as great as the difference between the rupture pressure of the casing and the pressure of fluid in the borehole exterior of the casing. Two lines run from the compartment to the surface so that the pressure and the type fluid therein can be controlled.

3,398,795
RETRIEVABLE WELL PACKERS
Thomas L. Elliston, Dallas, Tex., assignor to Otis Engineering Corporation, Dallas, Tex., a corporation of Delaware
Filed Aug. 16, 1965, Ser. No. 479,966
26 Claims. (Cl. 166—120)

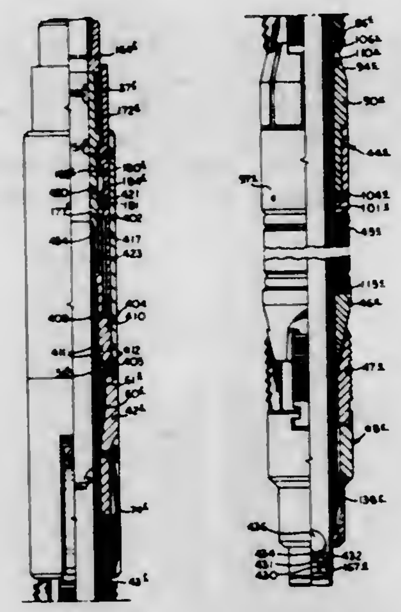

A well packer having anchoring means disposed on opposite sides of a sealing means for holding the sealing means against displacement in either longitudinal direction, and designed for use with a connector and sealing assembly which locks the anchoring means against displacement; said packer being removable from anchoring position in a well bore by upward longitudinal force applied to the mandrel of the packer after the connector and sealing means has been removed therefrom.

3,398,796
MULTIPLE INJECTION WELL PACKER APPARATUS
Hiram H. Fisher, Jr., William D. Myers, and David V. Chenoweth, Houston, Tex., assignors to Baker Oil Tools Inc., City of Commerce, Calif., a corporation of California
Filed Nov. 26, 1965, Ser. No. 510,001
16 Claims. (Cl. 166—120)

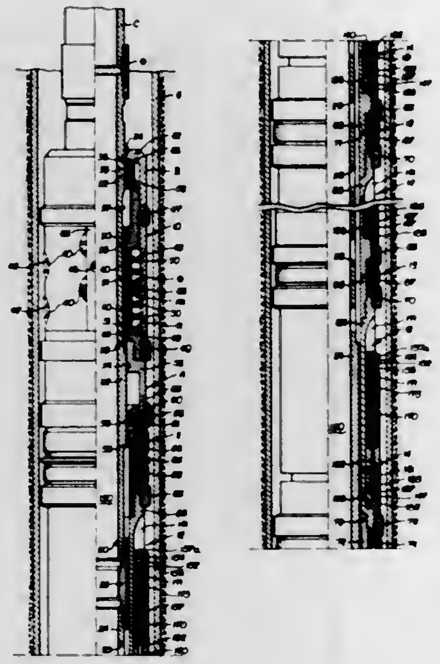

Apparatus for injecting fluid through perforations in a subsurface well casing, a plurality of spaced packings on a supporting body being adapted to seal against the casing to form a plurality of separated zones isolated from one another and straddling the casing perforations, a separate flow path being provided from a body passage to each zone, which flow path includes elongate tubing for controlling the rate at which fluid discharges into each zone, a limit valve also being provided in each flow path for limiting the maximum fluid pressure that can be imposed in each zone and on the surrounding well formation.

3,398,797
ARTICULATED ROTOR SYSTEM
Victor S. Mosinskis, Springfield, and Kenneth I. Grina, Media, Pa., assignors to The Boeing Company, Seattle, Wash., a corporation of Delaware
Filed May 18, 1966, Ser. No. 550,984
12 Claims. (Cl. 170—160.56)

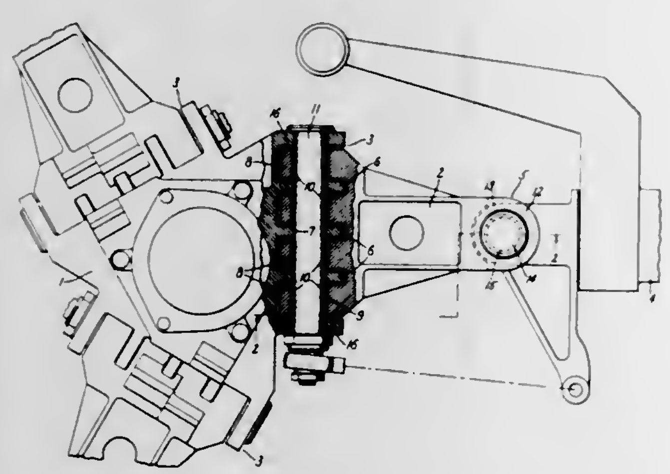

A mechanism for allowing cyclic oscillations in an articulated rotor system wherein a rotor blade is pivotally attached to a rotor hub by a plurality of interleaved lugs, the lugs supporting a hinge pin substantially along its complete length thereby distributing resultant forces along the entire length of the pin.

3,398,798
VIBRATING EARTH WORKING APPARATUS
Dothan L. Shelton, 2100 S. Polk, Amarillo, Tex. 79109
Filed Sept. 10, 1964, Ser. No. 395,520
1 Claim. (Cl. 172—1)

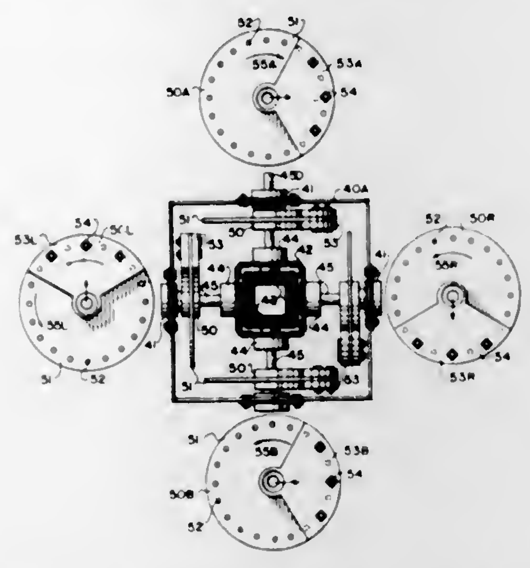

1. The method of vibrating earth working tools comprising:
(a) rotating two eccentric weights in
(b) an opposite direction about
(c) a single axis,
(d) rotating two additional eccentric weights
(e) in opposite direction about
(f) a second single axis,
(g) said second single axis at right angles to the first mentioned single axis,
(h) rotating all weights about a single axis at the same speed, and
(j) rotating the weights about one axis at twice the speed as about the other axis.

3,398,799
SUBSOILER HAVING ADJUSTABLE WEAR SHIN
Clarence B. Richey, Fresno, and Ronald E. Rasmussen, Sanger, Calif., assignors to Massey-Ferguson Inc., Detroit, Mich.
Filed Feb. 15, 1966, Ser. No. 527,615
5 Claims. (Cl. 172—719)

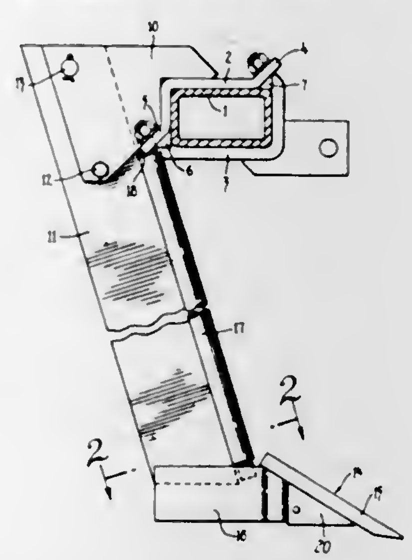

A subsoiler having a wear shin of circular cross section with noncircular end portions seated in complementary sockets at the upper and lower ends of the subsoiler shank to permit the shin to be rotated in steps about its own axis to alternately present a plurality of wear surfaces ahead of the leading edge of the shank. The shin can be selectively inverted with respect to the shank to provide additional wear surfaces.

3,398,800
LOCKING PIN
James F. Bennett, Stockton, Calif., assignor to International Harvester Company, Chicago, Ill., a corporation of Delaware
Filed Dec. 27, 1965, Ser. No. 516,255
2 Claims. (Cl. 172—753)

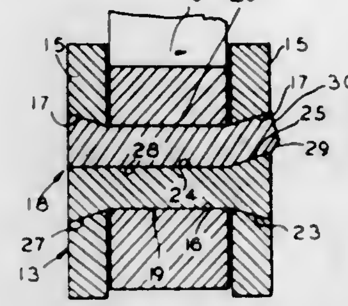

A removable locking pin for securing the socketed foot piece of a subsoiler or the like in telescoping relation on its supporting shank, wherein a cylindrical opening in the shank registers with beveled openings in opposite walls of the foot piece. The pin is formed of two semicylindrical segments one of which is made of hard steel the ends of which are beveled to seat in the beveled openings in the foot piece and having its flat diametral face flared at one end. The other pin segment is of relatively soft steel one end of which, when inserted in the said openings engages the flared end of the first segment and is bent to conform to the bevel of the adjacent foot piece opening.

3,398,801
PNEUMATIC IMPACT HAMMER FOR ROCK CRUSHING AND PILE DRIVING
Eimatsu Kotone, 4 Aza-Nishiyama 194, Kobayashi, Takarazuka-shi, Hyogo-ken, Japan
Filed Aug. 22, 1966, Ser. No. 573,993
6 Claims. (Cl. 173—16)

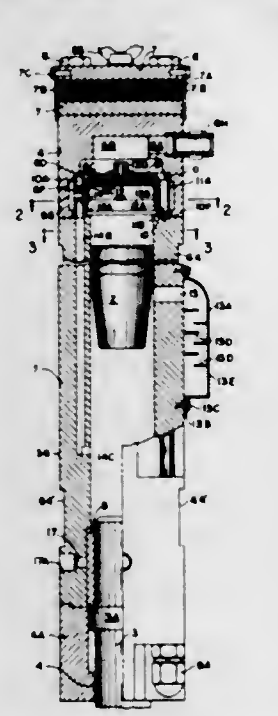

A pneumatic impact hammer in which the piston is reciprocated in a cylinder which carries an impact tool for limited vibration in one end with pneumatic control means to prevent the impact piston from reciprocating when the tool is in its extended position and this is accomplished by suitable valve means which prevents all except one reciprocation of the impact piston when the impact tool is at the limit of its extended work position to prevent damage to the impact hammer and to the mechanism and also prevents loss of pneumatic pressure.

3,398,802
FLUID OPERATED DRILL
Melvin D. Clark, Bryan, Ohio, assignor to The Aro Corporation, Bryan, Ohio, a corporation of Delaware
Filed Oct. 31, 1966, Ser. No. 590,989
10 Claims. (Cl. 173—169)

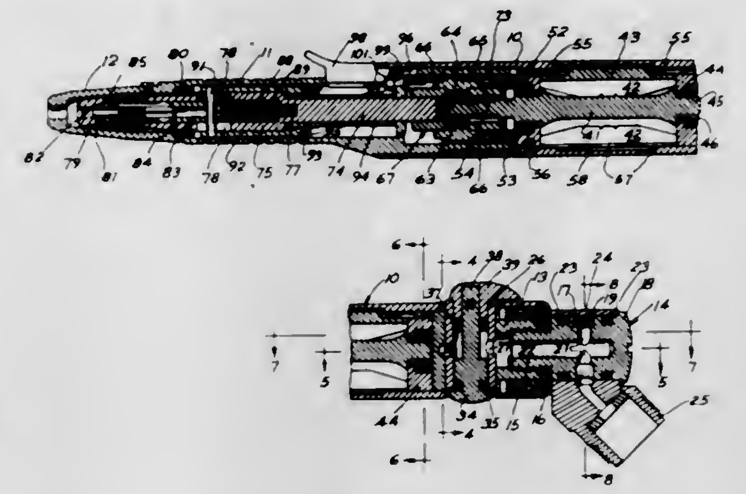

9. In a drill including an elongated tubular housing and a motor in the housing, and a collet in the housing adjacent to one end thereof and drivably connected to the motor, the improvement in the collet which comprises a tubular casing drivably connected to the motor and terminating at its outer end in an interior conically tapered surface, a cam slidable in the casing and formed in its end with a conically tapered recess facing said surface, a sleeve in the casing with conically tapered ends to engage the surface and recess respectively and having overlapping slots in its sides extending alternately from its opposite ends, a spring urging the cam toward the surface, and a manually operable lever on the outside of the housing operably connected to the cam to move it away from said surface.

3,398,803
SINGLE TRIP APPARATUS AND METHOD FOR SEQUENTIALLY SETTING WELL PACKERS AND EFFECTING OPERATION OF PERFORATORS IN WELL BORES
Kurt Leutwyler and Waldo W. Henslee, Jr., Houston, Tex., assignors to Baker Oil Tools, Inc., City of Commerce, Calif., a corporation of California
Filed Feb. 27, 1967, Ser. No. 618,736
26 Claims. (Cl. 175—4.52)

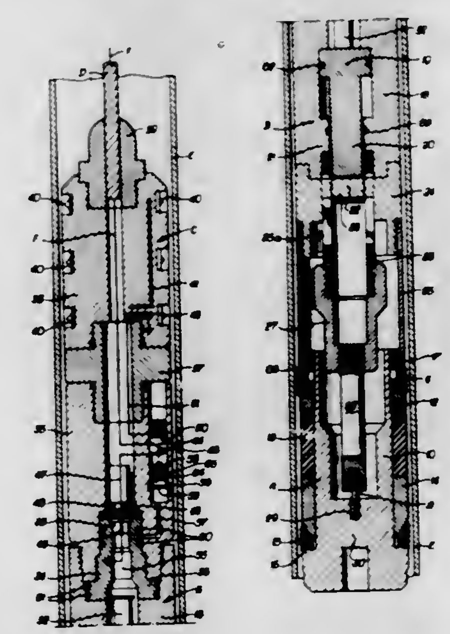

A well packer, setting tool and perforating gun run together in a cased well bore on a wire line, the setting tool setting the packer and being released from it, after

which the perforating gun can be placed in its desired location and fired to perforate the casing.

3,398,804
METHOD OF DRILLING A CURVED BORE
Don R. Holbert, Huntington Beach, Calif., assignor, by mesne assignments, to Sinclair Research, Inc., New York, N.Y., a corporation of Delaware
Filed Oct. 8, 1965, Ser. No. 493,970
3 Claims. (Cl. 175—61)

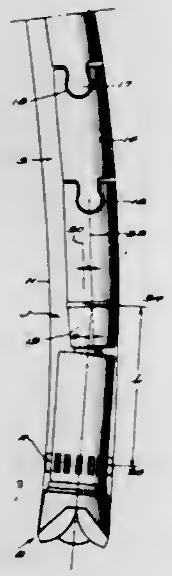

A method for drilling a curved bore with a predetermined radius of curvature from a main bore. The drilling apparatus, comprising a drill bit, a reamer having a diameter larger than the drill bit, a universal joint, and a rotatable flexible drill shaft, is deflected in the initial direction of the curved bore, and the curved bore is drilled. The universal joint and the reamer are selected so that the predetermined radius of curvature of the curved bore is given by $RC=L^2/2a$, where RC is the predetermined radius of curvature, L is the distance between the universal joint pivotal axis and the center of the reamer, and a is the distance between the centerline of the curved bore and the centerline of the universal joint.

3,398,805
LIQUID DISPENSER
Leo R. Waller, 1229 N. Rosedale, Tulsa, Okla. 74127
Filed May 23, 1966, Ser. No. 551,998
3 Claims. (Cl. 177—80)

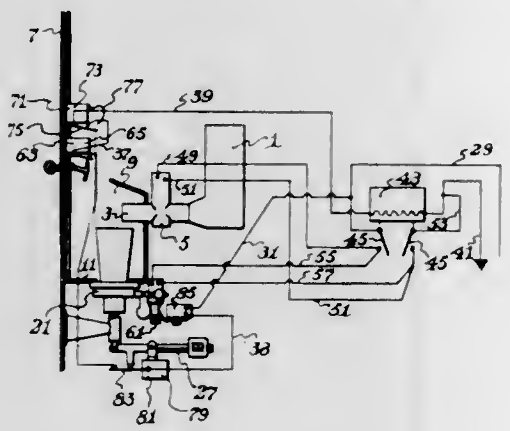

A beverage dispenser has various cheat-proof features, including circuit arrangements that guard against cheating by the use of unauthorized containers of the wrong size or weight, or cheating by the use of mispositioned containers or partially filled containers.

3,398,806
SELF-PROPELLED CRAWLER-TYPE MOBILE PLATFORM
Alvin L. Hendricks, 16445 11th SW., Seattle, Wash. 98166
Filed May 12, 1966, Ser. No. 549,715
5 Claims. (Cl. 180—2)

A mobile platform comprised of two matching individually powered crawler-type dollys rigidly tied together in rather widely space side-by-side relation by a spanner member serving as a load-carrying deck, and individually controlled as to direction and speed of drive from a position remote to the platform.

3,398,807
VEHICLE DRIVE
Irving M. Berger, 1 Constitution St., Bristol, R.I. 02809
Filed Feb. 7, 1966, Ser. No. 525,519
7 Claims. (Cl. 180—64)

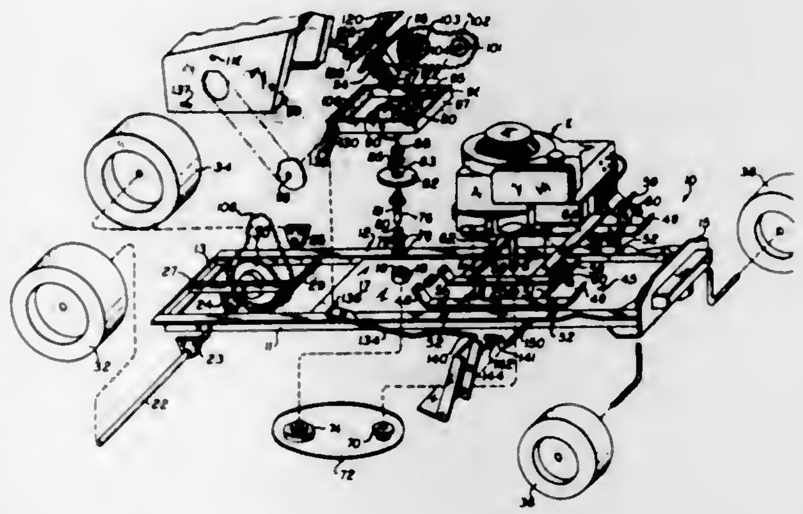

A wheeled vehicle chassis having a chassis frame with drive wheels thereon with an engine mounting base cradle secured to the frame with a floating cradle supported on the base cradle by means of vibration damping elements, and an engine on the floating cradle having a drive shaft coupled to a friction disc, with a clutch frame pivotally supported on said chassis, and rotatably supporting a clutch wheel for movement to and from said friction disc, with said clutch wheel coupled to the drive wheel of said chassis.

3,398,808
FRONT WHEEL AXLE SUSPENSION
William G. Heckenhauer, Bucyrus, Ohio, assignor to Huber Corporation, a corporation of Ohio
Filed Jan. 4, 1965, Ser. No. 423,177
9 Claims. (Cl. 180—79.2)

This invention relates to a front wheel lean suspension for a ground vehicle, such as a grader or other off the road vehicle. The lean suspension includes an axle pivotally mounted at its center to the vehicle frame, wheel supports pivotally connected to each end of the axle, a lean tie rod pivotally connected to the wheel supports, and a piston and cylinder connected at one end to the frame and at the other end to one of the wheel supports. The steering arrangement includes a steering tie rod connected to the wheel supports for movement laterally of

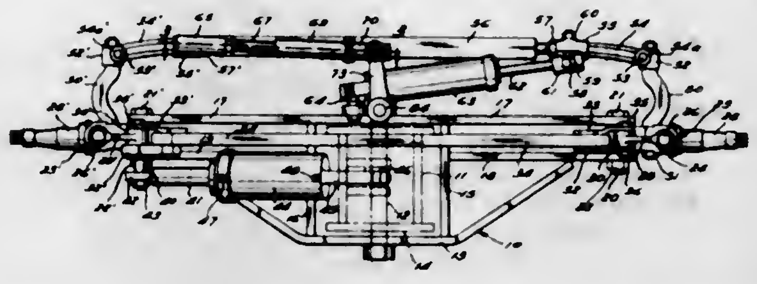

the vehicle and a power steering unit having a resilient drag link to counteract shocks imparted to the steering system.

3,398,809
AIR-CUSHIONED AND GROUND-ENGAGING VEHICLE
Kenneth G. Wood, 8025 44th SW., Seattle, Wash. 98116, and Walter A. Crowley, Seattle, Wash. (Lot 74, Belnor Mobile Home Park, 2041 S. 320th St., Federal Way, Wash. 98002)
Filed Oct. 19, 1966, Ser. No. 587,821
9 Claims. (Cl. 180—119)

The preferred embodiment of the present invention described herein comprises a vehicle body which forms a downwardly open plenum cavity which, when pressurized, lifts the vehicle from the ground surface in the well-known manner of a ground effects machine (i.e., G.E.M.). There is at the general center of gravity of the vehicle a ground wheel member which can be lowered to a ground-engaging position or raised to a retracted position. There is for the wheel member a power transmission, a clutch, and a brake. Further, the wheel is arranged to be freewheeling so that it can rotate along the ground surface with little internal friction. A fan is mounted at the rear of the vehicle to perform essentially three functions: (a) to blow air rearwardly to propel the vehicle, (b) to move air into the vehicle plenum cavity to pressurize the same, and (c) to pressurize a flexible skirt which extends about the entire perimeter of the vehicle and forms the peripheral portion of the plenum cavity. The vehicle is steered by vanes which can be moved to direct the propelling air stream in a desired direction. Power for the ground wheel member and the fan is supplied from a single motor.

While completely "airborne," the vehicle can travel at top speed. In this airborne condition, the ground wheel member can be lowered selectively to give lateral control (i.e., avoid "side slipping") with negligible loss of speed; or by lowering the wheel member and applying the brake, the vehicle can be slowed down or brought to an abrupt stop. When it is desired to accelerate quickly or climb a hill, the wheel member is lowered and driven under power. The steering vanes can be used without aid from the ground wheel member for steering the vehicle; but for more intricate maneuvering or more precise control, the ground wheel can be used in combination with the steering vanes. In fact, by dropping the wheel, applying the brake and turning the vanes, the vehicle can be turned completely around with the wheel location being a stationary pivot point. The control and power transmission apparatus and certain other features of the physical arrangement of the vehicle are believed also to be significant in the present invention and will be described hereinafter in some detail.

3,398,810
LOCALLY AUDIBLE SOUND SYSTEM
William T. Clark III, 6 Davis Blvd., New Orleans, La. 70121
Filed May 24, 1967, Ser. No. 640,893
15 Claims. (Cl. 181—.5)

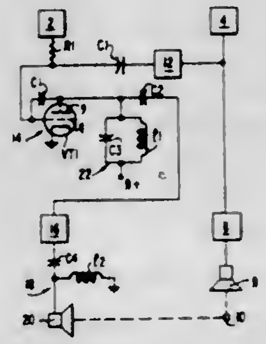

Two constant-amplitude beams of ultrasonic sound are directed to intersect at a region where sound intelligence is to be heard. One of the beams, i.e., a carrier, is phase modulated by an audio signal to a produce phase-shift in wave-fronts, the amplitude of the audio modulation being expressed in the degree of phase shift of the carrier, and the frequency of the audio modulation being expressed as the rate at which the phase shift takes place. At the region in which the two beams intersect, natural variations in ampliude of the reproduced sound occur because of difference in the phases of the modulated and unmodulated waves; the in-phase components of the modulated and unmodulated beams add, the out of phase components will cancel, and anything between will add or subtract to a greater or lesser degree.

3,398,811
ACOUSTICAL TILE WITH VIBRATILE MEMBRANE EXTENDING INTO FISSURES
Robert E. Muller, Wilmette, Ill., assignor to United States Gypsum Company, Chicago, Ill., a corporation of Delaware
Filed Aug. 28, 1961, Ser. No. 134,523
7 Claims. (Cl. 181—33)

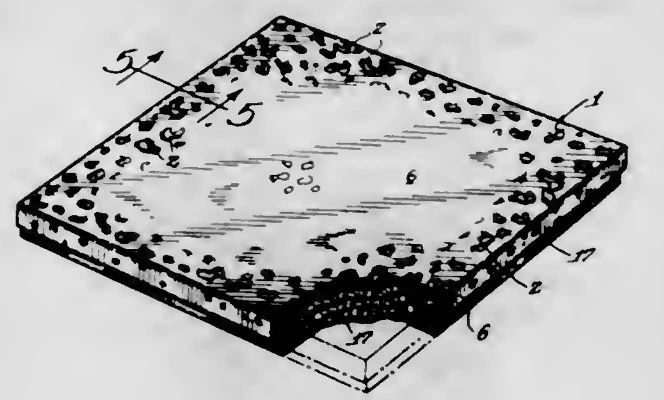

A fissured acoustical sheet or tile is covered with a vibratile plastic film. The film is free to vibrate relative to the fissured surface over which disposed and is formed so as to comply with the fissures of said surface. The plastic film is fixedly secured to the sheet edge portions.

3,398,812
KINETIC ENERGY ABSORBER
Gerald H. Peterson, 1235 S. Westgate, West Los Angeles, Calif. 90025
Filed Sept. 7, 1966, Ser. No. 577,757
6 Claims. (Cl. 188—1)

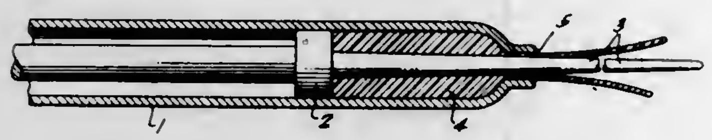

The invention is a device for absorbing kinetic energy by deformation of plastic material by extrusion comprising an elongated cylinder having an extrusion orifice at one end thereof, a piston within said cylinder adapted to move toward said orifice, plastic material within said cylinder adapted to be extruded through said orifice when said piston moves toward said orifice, and means forward of said piston to vary the resistance to extrusion of said plastic material as said piston moves toward said orifice.

3,398,813
INDIVIDUAL AND COMBINATION WHEEL BRAKE MECHANISM
Andrew A. Pontani, 14728 Lassen, Sepulveda, Calif. 91343
Filed Jan. 3, 1967, Ser. No. 606,873
5 Claims. (Cl. 188—16)

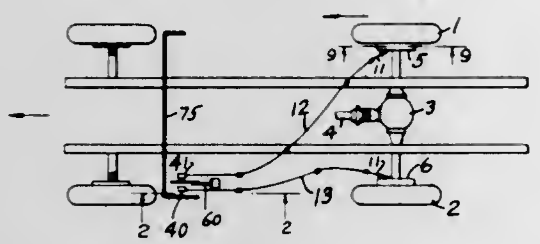

This invention relates to an emergency brake lever mechanism for vehicles; the rear wheels of the vehicle may be braked simultaneously or a single wheel may be braked, the other wheel being allowed to rotate under engine power through a differential. The brake mechanism includes a pair of housings movable with the lever, a slide block in each housing connected by a cable with a rear brake and means for selectively locking and unlocking each block to its housing.

3,398,814
AUTOMOTIVE VEHICLE BRAKES
William T. Deibel, Marion, Ohio, assignor to Eaton Yale & Towne Inc., Cleveland, Ohio, a corporation of Ohio
Filed Jan. 9, 1967, Ser. No. 608,091
3 Claims. (Cl. 188—78)

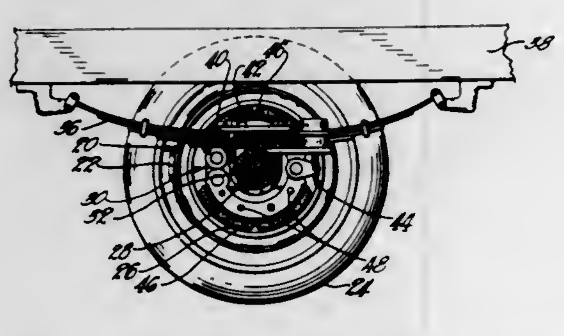

Truck brake or the like, wherein bolts, on the inside of the wheel, in alignment with the axle, can be removed to free the shoe and its worn lining from the shoe carrier. The lower shoe is removed by a straight axial pull. The upper shoe is unbolted, then turned peripherally to the bottom of the wheel, and similarly removed by a straight axial pull. Wheels are not removed. Brakes are adjusted to receive new linings, which are applied by reverse process; and vehicle is fully operational.

3,398,815
ELECTRICALLY CONTROLLED BRAKE SYSTEM FOR RAILWAY CARS
Peter W. Brath, Pittsburgh, Ronald A. Sarbach, Wilmerding, and Robert D. Smith, Irwin, Pa., assignors to Westinghouse Air Brake Company, Wilmerding, Pa., a corporation of Pennsylvania
Filed Sept. 14, 1966, Ser. No. 579,386
17 Claims. (Cl. 188—195)

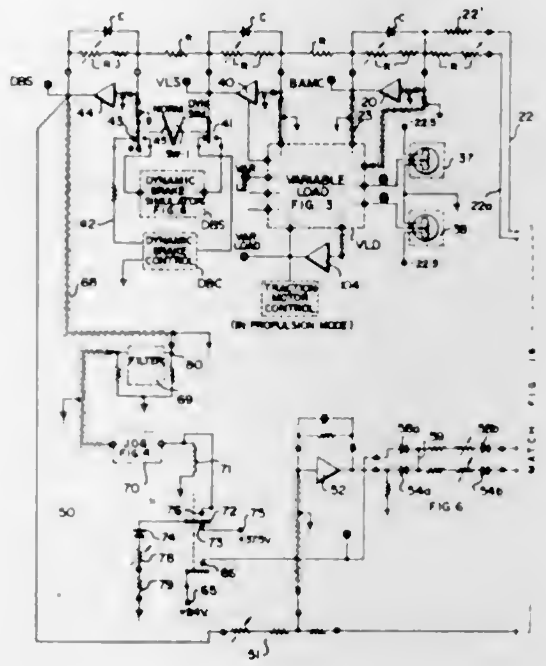

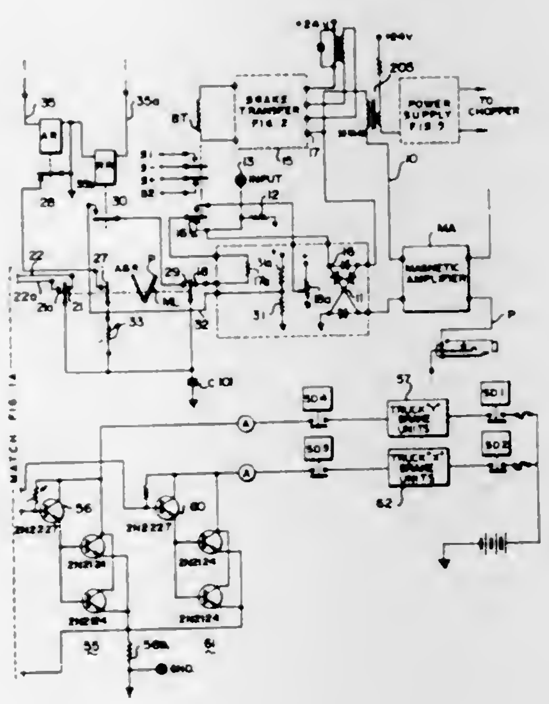

A vehicle braking system controlled selectively by an application (A) and release (R) relay control means, in a current responsive "P" wire control means. The level of the control signal from either the A and R relay mode or the P-wire mode of operation is modulated by signal analogs of load on the vehicle and the degree of dynamic braking being applied, and is supplied to an error gain amplifier which in turn drives power amplifiers to provide power current to torque motor released spring-applied tread brakes. The degree of reduction from normal current energizing the torque motor determines the degree of brake application by the spring brakes. A "jog" circuitry means is provided for initiating operation of the torque motor to effect brake release.

3,398,816
SYSTEM FOR CHANGING THE FUEL SUPPLY
Eduard Senn, Hungerburg 46, Innsbruck, Tyrol, Austria
Filed Mar. 14, 1966, Ser. No. 534,027
Claims priority, application Austria, Mar. 15, 1965, A 2,292/65; Oct. 21, 1965, A 9,548/65
27 Claims. (Cl. 192—.9)

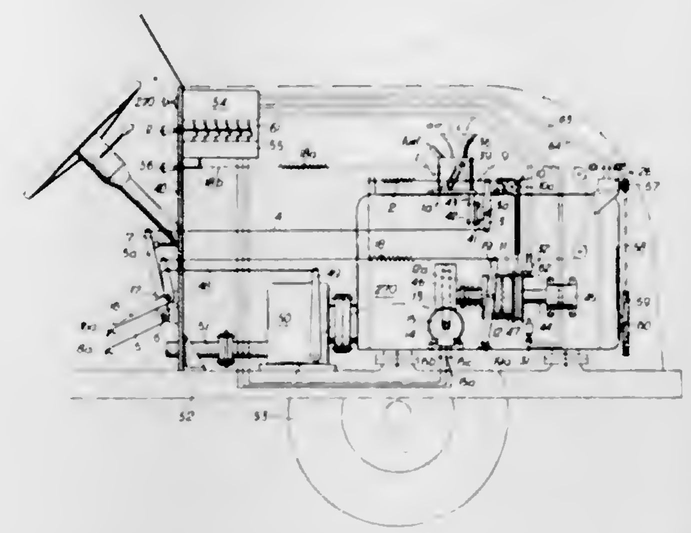

A system for changing the fuel supply to an engine for a motor vehicle in which an accelerator lever and a positioning means cooperable with a control element for controlling the fuel supply to the engine is provided with, the accelerator lever and the positioning means being coupled mechanically to the control element. The positioning means is adapted by way of a switch operable by the driver for adjusting the control element to control the fuel supply to the engine alternatively to increase or decrease the fuel supply when the accelerator lever is released.

3,398,817
CONTROL SYSTEM FOR MOTOR VEHICLE ACCELERATOR PEDAL
Junshiro Shinga, 224 Misecho, Kashihara, Nara Prefecture, Japan
Filed May 25, 1966, Ser. No. 552,885
Claims priority, application Japan, Oct. 5, 1965, 40/61,177
7 Claims. (Cl. 192—3)

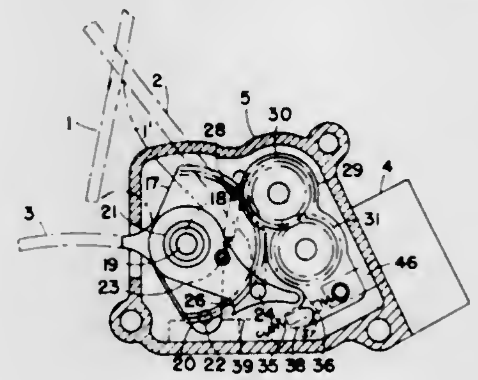

Control system for the pivotally mounted accelerator pedal of a motor vehicle in which means are provided for maintaining the accelerator pedal fixed at any position, making it unnecessary for the driver to keep his right foot on it and thus freeing his right foot for operating the brake pedal whenever required; also for making the vehicle run at a uniform speed.

3,398,818
CONTINUOUS BRAKE FOR VEHICLES, ESPECIALLY MOTOR VEHICLES
Werner R. E. Hensel, Fellbach, Wurttemberg, Germany, assignor to Daimler-Benz Aktiengesellschaft, Stuttgart-Unterturkheim, Germany
Filed July 20, 1966, Ser. No. 566,524
Claims priority, application Germany, July 24, 1965, D 47,825
2 Claims. (Cl. 192—3.34)

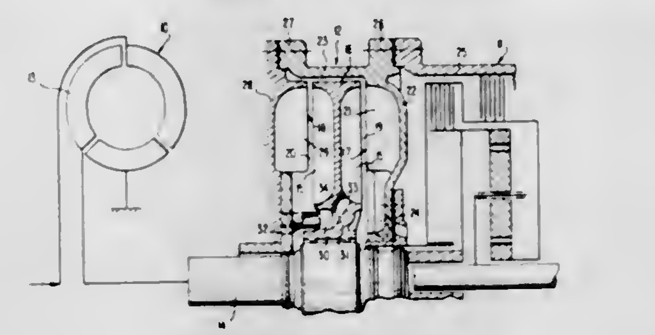

A vehicle power assembly having a continuous hydrodynamic brake drivingly connected between the hydrodynamic torque converter and change-speed gear transmission, which brake has a housing with a connecting flange on the torque converter side that is substantially identical to the change-speed gear transmission connecting flange and has a connecting flange on the transmission side that is substantially identical to the torque converter housing flange so that alternatively the torque converter housing may be connected directly to the transmission housing without the interposition of the hydrodynamic brake in the manufacture of vehicles or the hydrodynamic brake may be inserted into the drive path of an existing vehicle. Preferably, the brake is of double construction with the impeller having blade set on both axial sides cooperating with corresponding stationary blade sets to form two working chambers with the impeller hub having an axially facing annular groove cooperating with a supply pressure line terminating therein.

3,398,819
MAIN CLUTCH RELEASED BY ENGAGEMENT OF STEERING CLUTCH AND BRAKE
Charles A. L. Ruhl, Wheaton, Edward Mayer, Riverside, and Frederick M. Hugh, Mount Prospect, Ill., assignors to International Harvester Company, Chicago, Ill., a corporation of Delaware
Filed Aug. 19, 1966, Ser. No. 573,700
22 Claims. (Cl. 192—4)

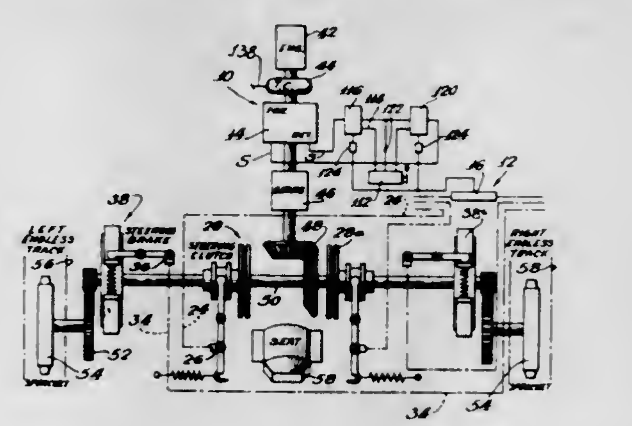

1. In the propulsion power train of a vehicle leading from the vehicle engine, and including a steering clutch and brake, and further including main clutch means coupled in the train between the engine and the steering brake and clutch:

individual controls for the respective main and steering clutches and said brakes, including a main clutch release control; and

means of interconnection among the controls effective only for releasing the main clutch means when the steering clutch and brake are engaged, and for otherwise sustaining the main clutch means in a normal position of engagement.

3,398,820
OPERATION OF DOG-CLUTCHES FOR CABLE LIFTERS
Alfred Bettis, Gateshead, England, assignor to Clarke, Chapman & Co. Limited, Gateshead, England, a company of Great Britain and Northern Ireland
Filed July 6, 1966, Ser. No. 563,245
11 Claims. (Cl. 192—35)

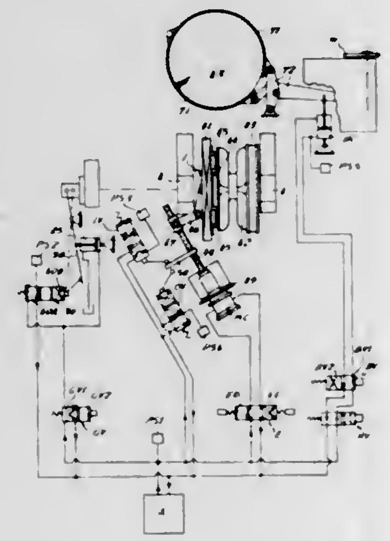

The invention facilitates the operation of dog-clutches employed for elements subjected to heavy loads, for example, dog-clutches used for ship's anchor windlasses. The control means of the invention include elements rotatable with driven and driving members respectively, responsive means rotatable with these elements and adapted to cooperate when the dog-clutch is in a position to engage; and a control device actuable by the co-operating responsive means to permit engagement of the dog-clutch.

3,398,821
DOUBLE FRICTION CLUTCH FOR MOTOR VEHICLES
Clemens Nienhaus, Lohmar, and Jurgen Vollmer, Siegburg, Germany, assignors to Firma Jean Wallerscheid KG., Siegburg-Lohmar, Germany, a corporation of Germany
Filed Nov. 2, 1966, Ser. No. 591,599
Claims priority, application Germany, Feb. 18, 1966, W 40,957
8 Claims. (Cl. 192—48.7)

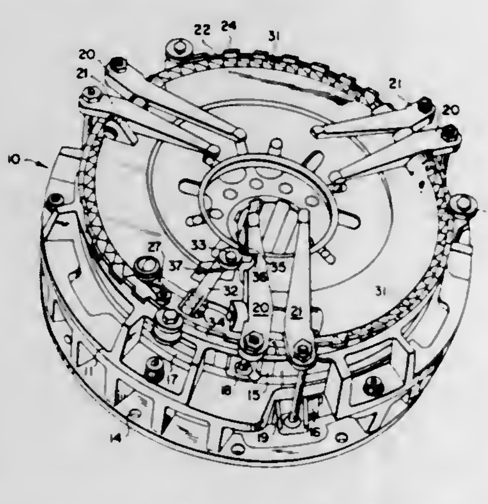

A double friction clutch having a shift ring rotatably mounted on the cover plate and advanced progressively upon actuation of the disengaging levers. The shift ring will lock alternately in a selected sequence each of the disengaging lever systems against engagement of the friction clutch connected thereto.

3,398,822
FRICTIONAL WEAR ELEMENT AND SPRING-APPLIED BRAKE OR CLUTCH EMBODYING SAME
John V. Eakin, Rocky River, Ohio, assignor to Eaton Yale & Towne, Inc., a corporation of Ohio
Filed May 27, 1966, Ser. No. 553,349
17 Claims. (Cl. 192—66)

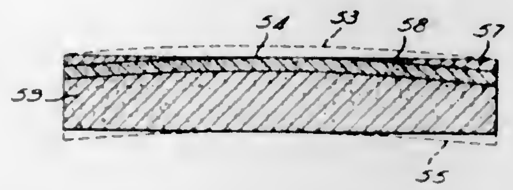

The present spring-applied brake or clutch has frictional wear elements which have an increasing coefficient of friction as wear takes place on them. This compensates for the longer spring stroke and the resulting decreasing spring rate as such wear takes place. Preferably, the wear element has superimposed layers of torque-sustaining friction material having higher coefficients of friction in succession away from its initial frictional engagement face. In certain embodiments, these successive layers each are continuous across the complete extent of the wear element parallel to its initial frictional engagement face and the interfaces between the layers extend parallel to this face. In other embodiments, the interfaces between successive layers are nonparallel to the initial frictional engagement face.

3,398,823
ARTICLE TRANSFER DEVICE
Frank Hollenton, Mountainside, N.J., assignor to American Machine & Foundry Company, a corporation of New Jersey
Filed Nov. 10, 1966, Ser. No. 593,434
4 Claims. (Cl. 198—22)

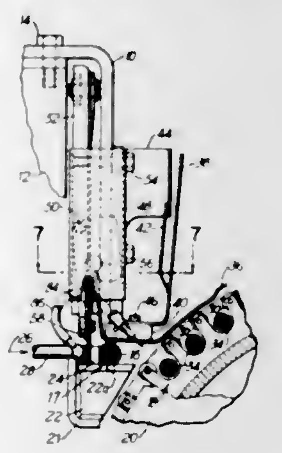

Mechanism for transferring cigarettes from a longitudinally moving path into a perpendicularly moving conveyor including pneumatic means for propelling the cigarette and means for controlling the pneumatic means.

3,398,824
ORIENTING MECHANISM
Rudolf A. Spyra, % Burghof Engineering and Mfg. Co., 1720 W. Diversey, Chicago, Ill. 60614
Filed Mar. 24, 1967, Ser. No. 625,744
13 Claims. (Cl. 198—33)

Mechanism operable to orient dished articles received randomly from a hopper (such as jar lids) so that they all issue from the mechanism in open-side-down position. The mechanism includes hinged hopper sections and means for manipulating them to properly feed the articles to the orienting mechanism.

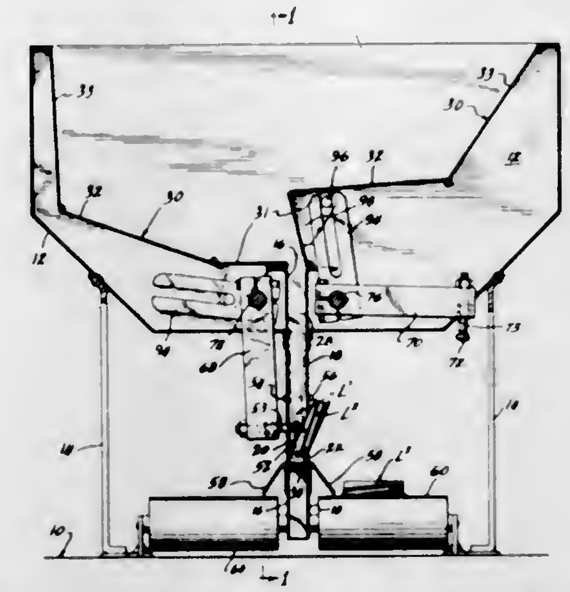

3,398,825
CONTAINER FOR CLEANING, PACKING, STORING, AND PRESERVING PAINT APPLICATORS
William M. Flook, Jr., Greenspring Road, Greenville, Del. 19807, and George T. Barnhill III, 911 Overbrook Road, Wilmington, Del. 19807
Continuation-in-part of application Ser. No. 545,440, Apr. 26, 1966. This application Feb. 3, 1967, Ser. No. 613,773
6 Claims. (Cl. 206—15.1)

Containers for paint applicators having an applicator guide surface extending upwardly from the opening in the container for guiding the applicator into the opening.

3,398,826
NARROW FOLD MOIST TOWELETTE PACKAGE
David Clancy, Canaan, Conn., assignor to Colgate-Palmolive Company, New York, N.Y., a corporation of Delaware
Continuation of application Ser. No. 539,067, Mar. 31, 1966. This application Oct. 12, 1966, Ser. No. 586,306
3 Claims. (Cl. 206—46)

A compact single use package cleansing unit consisting essentially of a liquid impregnated folded applicator pack enclosed in a sealed tearable gas-tight envelope. The applicator pack is a single flexible sheet of absorbent fibrous material initially accordion folded along a series of parallel fold lines wherein coextensive plies are substantially in directly superposed relationship and subsequently folded over upon itself along a medial line at a right angle to the parallel lines to its compact final folded form in which it has a width of approximately an inch and

a length of approximately 2½ inches. The gas-tight envelope conforms in size substantially to that of the folded applicator pack.

3,398,827
TRAYS, AND MULTI-TRAY PACKAGES
Maurie Laskin, Milwaukee, Wis., assignor to W. R. Grace & Co., a corporation of Connecticut
Filed Jan. 24, 1967, Ser. No. 611,379
8 Claims. (Cl. 206—65)

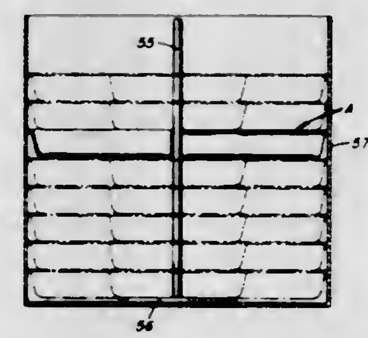

Multicavity, substantially circular, reusable product carrying trays which may be unitary, or comprised of assembled individual sectors; preferably having, in either case, a centrally located aperture or opening; and, multi-tray packages comprising an aligned stack of such multicavity trays on a base to which there is connected an arm passing axially through the stack to align the same and to serve as lifting and/or carrying means when desired.

3,398,828
HOLDING DEVICE FOR CYLINDRICAL OBJECTS
Benjamin F. Allen, West Brighton, and Lee C. Fridd, Rochester, N.Y., assignors to Bausch & Lomb Incorporated, Rochester, N.Y., a corporation of New York
Filed Sept. 20, 1967, Ser. No. 669,213
5 Claims. (Cl. 206—72)

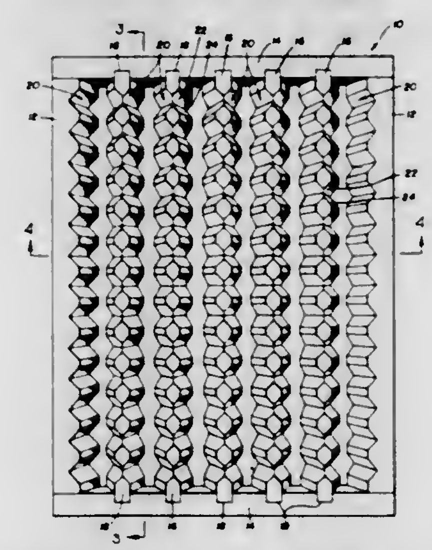

A holding device of the type designed to retain a plurality of cylindrical objects of varying thicknesses and of

varying diameters is provided herein and comprises an outer framework with a plurality of divider members attached interiorly of the framework. Each divider member contains a plurality of elongated grooves formed on the side thereof, said grooves pointing downwardly and being inclined outwardly from the top of the divider to the bottom of the divider.

3,398,829
APPARATUS FOR SEPARATING ADULTERANTS DURING PNEUMATIC CONVEYING
George N. Brown, Wilmington, Del., assignor to E. I. du Pont de Nemours and Company, Wilmington, Del., a corporation of Delaware
Continuation-in-part of application Ser. No. 355,395, Mar. 27, 1964. This application Feb. 17, 1967, Ser. No. 616,908
4 Claims. (Cl. 209—3)

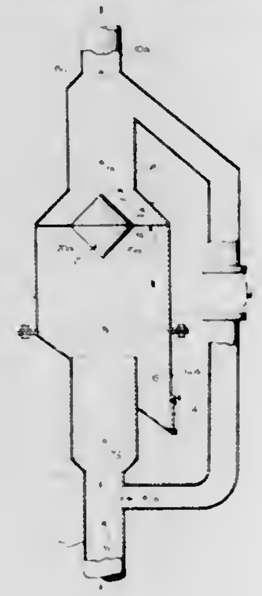

In a pneumatic conveyor line, a separator having two expansion chambers of predetermined length and cross-sectional area to reduce air velocity in the direction of flow and consume inertial forces of particles being conveyed. The chamber of larger diameter is connected to the downstream end of the conveyor line by a frustoconical reducer. A double cone member has its upper and lower cones coaxially disposed in the reducer and larger diameter chamber respectively to bar linear travel from the larger diameter chamber to the downstream end of the conveyor line.

3,398,830
DRAIN GUARD
Holger W. Hornquist, 424 5th Ave. S., Port Alberni, British Columbia, Canada
Filed Dec. 6, 1965, Ser. No. 511,669
4 Claims. (Cl. 210—153)

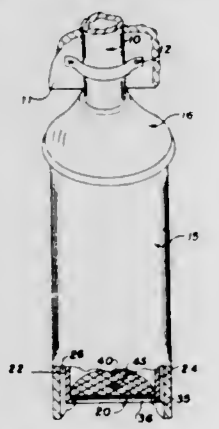

A drain guard having an open-ended tube suspendable in an upright position in the open upper end of a drain pipe beneath a downspout, the lower end of the tube being provided with a loose tiltable screen, said tube, downspout and screen being arranged so that the screen is cleaned by tilting after the tube is slipped upwardly over the downspout.

3,398,831
FILTER STRUCTURE
Adrian L. Jones, 2157 E. 3380 S., Salt Lake City, Utah 84109
Filed Jan. 20, 1966, Ser. No. 521,980
1 Claim. (Cl. 210—198)

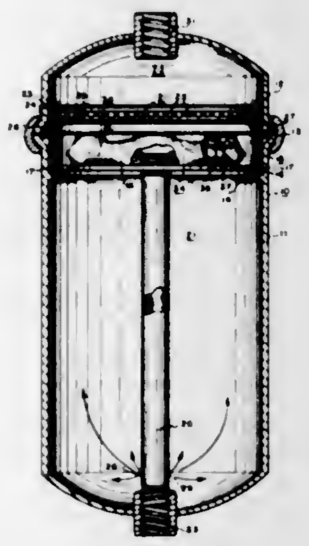

The present invention supplies improvements to a filter tank. These improvements comprise:

(1) provision for loosening solid material such as fertilizer which might otherwise tend to gravitate at the bottom of the tank adjacent its supply pipe, and

(2) provision, with a swirl, fluid-sweeping feature associated with the underneath side of the filter plate of the tank, of an improvement, the improvement comprising a multiplicity of holes disposed within said filter plate in a manner such that the hole edges protrude away from the bottom planar surface of the plate into the unfiltered zone of the tank. Such a provision insures that the filter plate will remain unclogged.

3,398,832
FILTER DEVICE
Hans Mueller, Erlenbach, Zurich, Switzerland
Continuation-in-part of application Ser. No. 427,022, Jan. 21, 1965. This application Aug. 15, 1967, Ser. No. 660,763
Claims priority, application Germany, Jan. 22, 1964, M 47,126
8 Claims. (Cl. 210—284)

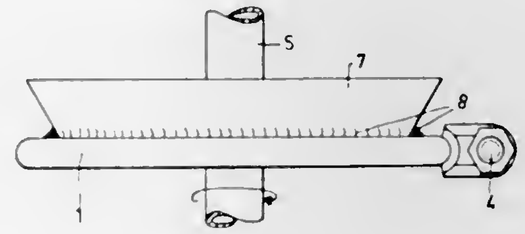

A rotatable shaft carries a transversely extending plate. A perforate supporting member overlies the upper surface of the plate and carries in turn a layer of particulate filtering material. Connecting means in form of an annular element connects the plate and the supporting member together at their edges and also confines the particulate filtering material but permits centrifugal ejection thereof, and of solid fraction retained therein, in response to rotation of the shaft.

3,398,833
SUPPORT PLATES FOR REVERSE OSMOSIS DESALINATION APPARATUS
Murray Marks, Los Angeles, and Joseph A. Ferrara, Glendale, Calif., assignors to Aerojet-General Corporation, El Monte, Calif., a corporation of Ohio
Filed Sept. 9, 1966, Ser. No. 578,266
7 Claims. (Cl. 210—321)

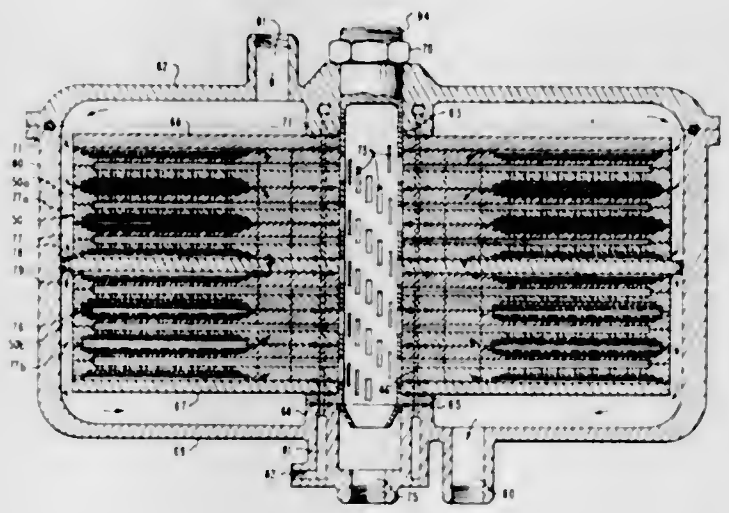

A reverse osmosis desalination device comprising a stack of plates, each plate comprising, two annular disc segments, each segment supporting a membrane and having lateral slots communicating with said membrane and with radial passageways which lead to a desalinated water header, alternating segments having projecting portions to space said membranes apart.

3,398,834
REVERSE OSMOSIS WATER PURIFICATION APPARATUS AND CELL THEREFOR
Fleet E. Nuttall, Alhambra, and Paul A. Cantor, West Covina, Calif., assignors to Aerojet-General Corporation, El Monte, Calif., a corporation of Ohio
Filed Oct. 10, 1966, Ser. No. 585,406
7 Claims. (Cl. 210—321)

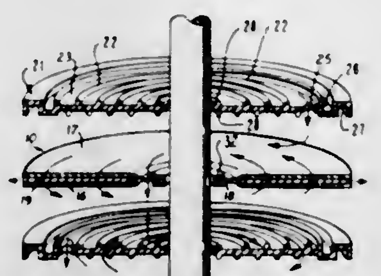

A stack of reverse osmosis cells, each cell comprising an annular filter paper supporting annular reverse osmosis membranes on opposite sides thereof, the membranes overlapping the support at its inner periphery and flush with the support at its outer periphery, the cells having spiral guides therebetween, the cells and guides arranged so that there is successive, spiralling salt water flow across each membrane surface and fresh water flow from the outer periphery of the filter paper support.

3,398,835
FILTER
Robert J. Offer, Racine, Wis., assignor to Walker Manufacturing Company, Racine, Wis., a corporation of Delaware
Filed Sept. 22, 1965, Ser. No. 489,210
1 Claim. (Cl. 210—443)

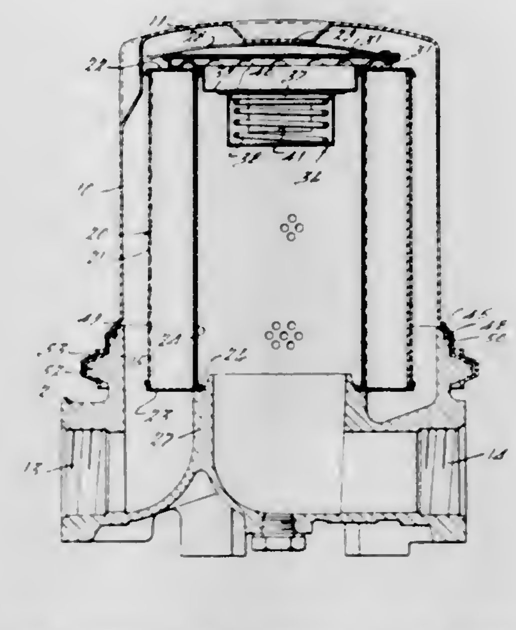

A filter assembly of housing, filter element, and base includes aligned conical and cylindrical portions on the housing and base and a radial shoulder with an annular groove along with an O-ring seal that is larger than the groove that is trapped by the conical and cylindrical surfaces to form an effective seal compressed by axial motion of the housing when it is clamped to the base.

3,398,836
FILTER UNIT, IN PARTICULAR FOR COFFEE
Max Hugentobler, 43 Schwandenwiesen, 8052 Zurich, Switzerland
Filed Oct. 23, 1965, Ser. No. 503,546
3 Claims. (Cl. 210—455)

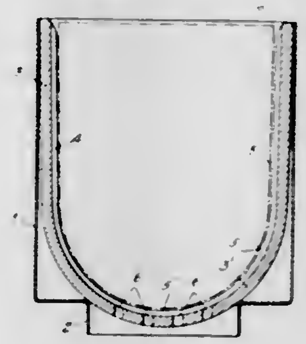

The invention disclosed herein relates to a filter especially designed for coffee and one that can be of a size for the filter or percolating of a large quantity of coffee or one that can be of a size to be seated on the upper rim of a drinking cup and in each instance is constructed to provide means for the support thereof on a liquid-receiving receptacle.

3,398,837
IMPREGNATED SELF-SUPPORTING HONEYCOMBED FILTER CARTRIDGE
Edward R. Adams, Lebanon, Ind., assignor to Commercial Filters Corporation, Lebanon, Ind., a corporation of New York
Filed Dec. 3, 1964, Ser. No. 415,647
3 Claims. (Cl. 210—496)

1. A mechanically self-sustaining porous tubular filter element having:

napped yarn wound back and forth in spaced criss-cross

fashion into a honeycomb tube and providing a tunneled wall of substantial thickness about an unrestricted axial bore;

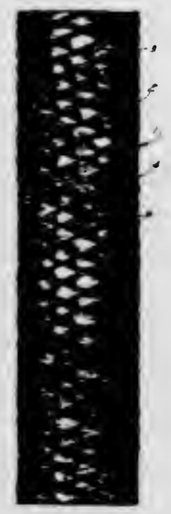

and a cured thermosetting bonding agent impregnating and bonding the windings of said yarn together into a substantially rigid unit without interfering with the porosity of the tube, the tube withstanding radially compressive forces under high pressure differential substantially without compressing of the yarn windings or the tube wall even though there is no supporting core means in said bore.

3,398,838
REMOVABLE MECHANICAL SLUDGE COLLECTOR FOR PACKAGE TYPE AEROBIC SEWAGE
Ryan D. Mitchell, Thomasville, Ga., assignor to Davco Corporation, Thomasville, Ga., a corporation of Georgia
Filed June 12, 1964, Ser. No. 374,593
10 Claims. (Cl. 210—531)

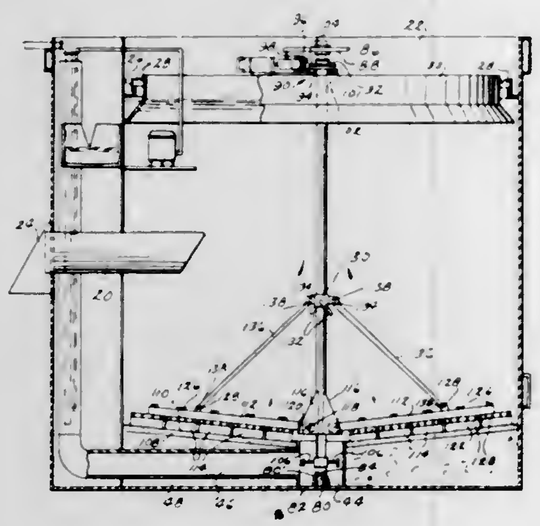

1. In a sewage treating system having a sludge setting tank and a sludge sump positioned centrally of the tank at the bottom thereof, the improvement comprising: an easily removable rotary collector for continuously moving settling sludge from radially outer positions along the bottom of the tank to the sump thereof, the collector including a generally vertically directed rotatable shaft; means journalling said shaft at the lower end thereof in said sump, means mounting a motor adjacent said shaft near the upper end of the tank; a bearing mounted on said shaft adjacent said motor; means removably supporting said bearing with respect to the upper end of said tank, said means comprising a rigid elongated element extending transversely between and being supported upon the settling tank near the upper end of the tank and a generally horizontally extending bifurcated member partially encompasing said shaft, said bearing resting upon said bifurcated member peripherally of the bifurcation thereof; a plurality of generally radially extending arms pivotally mounted on said shaft intermediate the ends thereof for generally vertically directed pivoting movement; means on said shaft for arresting the position of said pivotable arms; and means on said arms for scrapingly engaging the bottom of said tank, said last mentioned means being positionable to collect sludge and move it toward said sump.

3,398,839
SNAP-ON HANGER
William G. Ballenger and Robert G. Schaefer, Highland Park, Ill., assignors to Central Specialties Co., Chicago, Ill., a corporation of Illinois
Filed Oct. 13, 1966, Ser. No. 586,522
8 Claims. (Cl. 211—13)

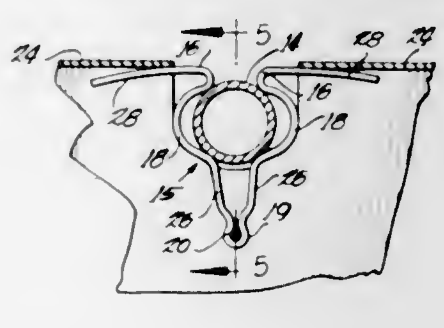

A hanger including a body member having a pair of opposed nibs which are oriented with an arcuate open portion thereof in a fashion such that the nibs and the body member cooperate to define a yieldable closure approximating the size of a closet or storage bar. A garment or other device to be displayed or stored is secured on the body member, and the hanger can be snapped in place on a conventional closet bar.

3,398,840
NESTABLE-STACKABLE RECEPTACLE
James D. Wilson, Long Beach, Calif., assignor to Banner Metals, Inc., Compton, Calif., a corporation of Ohio
Filed Oct. 24, 1966, Ser. No. 588,804
9 Claims. (Cl. 211—126)

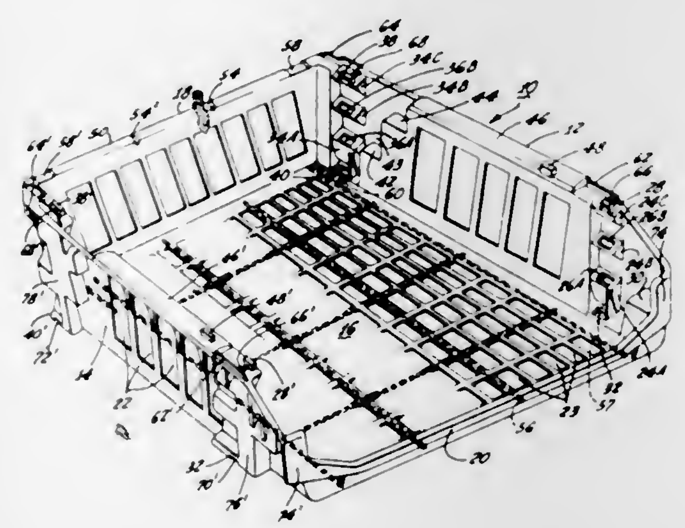

An improved plastic or sheet metal receptacle is provided which is capable of storing and displaying bread, for example, or other bakery products, or the like. The receptacle of the invention is constructed so that it may be stacked with other similar receptacles to display the merchandise, and so that it may be nested down into the other receptacles when empty, in order to conserve space.

3,398,841
APPARATUS FOR STACKING MATERIAL AND AUTOMATICALLY FEEDING THE MATERIAL TO A WORKTABLE OF A PAPER-CUTTING MACHINE
Rudolf Mohr, Hattersheimerstrasse, Hofheim, Taunus, Germany
Filed Feb. 7, 1967, Ser. No. 614,474
8 Claims. (Cl. 214—8.5)

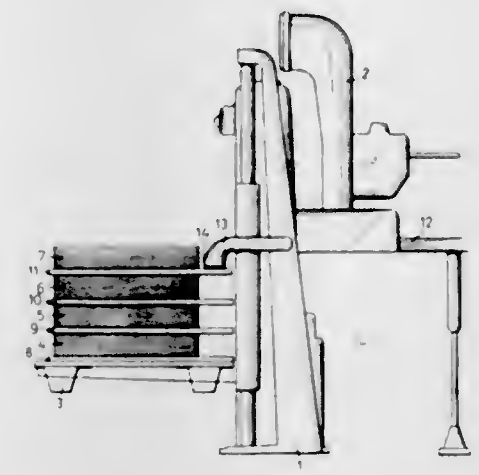

Material handling apparatus in which a plurality of stacks of aligned material are superposed on a lift support with hollow boards interposed between successive stacks. The lift support is raised until the uppermost board reaches the height of a worktable, at which point an air supply conduit delivers compressed air to the uppermost hollow board and the raising of the lift support is terminated. The uppermost stack of material can then be automatically conveyed to the worktable on a cushion of air.

3,398,842
APPARATUS FOR TRANSFERRING BEER KEGS FROM STORAGE TO A CONVEYOR
Ernst R. Schickle, Tappan, N.Y., assignor to Rheingold Breweries, Inc., Brooklyn, N.Y., a corporation of New York
Filed Feb. 11, 1966, Ser. No. 526,831
9 Claims. (Cl. 214—16)

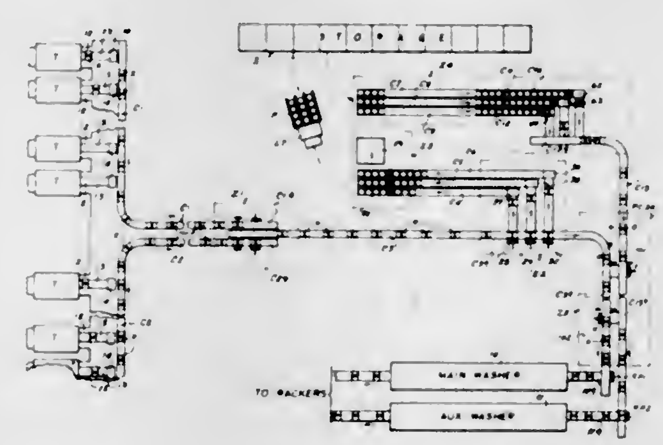

Beer keg handling system for breweries or the like in which a plurality of rows of erect kegs received from storage are propelled toward terminally located transfer devices operative to receive the erect keg first in line in each row and to transfer such kegs into prone predetermined spaced relation on a common delivery conveyor in response to the need for such kegs to maintain an adequate supply thereof for a downstream operation thereon.

3,398,843
AIRPLANE HANGAR
Clark W. Smith, R.R. 4, Decatur, Ind. 46733
Filed May 23, 1966, Ser. No. 551,983
19 Claims. (Cl. 214—16.1)

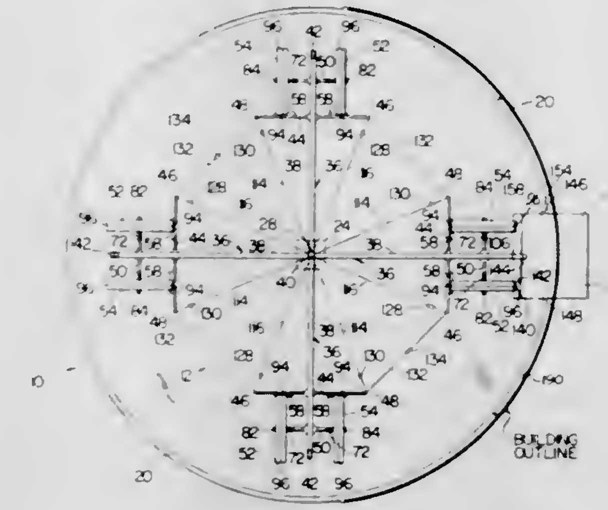

A vehicle storage device having a turntable rotatably mounted on an upright and substantially rigid post. The turntable has at least one vehicle stall thereon, and in a specific embodiment, the stall is especially adapted to hold an aircraft. The storage device can be placed within a building if desired. A ramp can be positioned adjacent the peripheral edge of the turntable such that a vehicle can be positioned thereon and can be removed therefrom when desired. The turntable can be provided with means for holding the vehicle stall in registry with the ramp and for bridging any gap there may be between the ramp and the turntable. Also the turntable can be provided with means for adjusting the stall such that a number of different kinds of vehicles can be supported by the stall and such that portions of the stall can be raised and lowered relative to a ramp such that the ramp and the stall can be positioned to approximate portions of a continuous surface thereby facilitating the placing of a vehicle on the stall and the removing of a vehicle from the stall. In the specific embodiment above-mentioned, the turntable can be provided with four aircraft stalls.

3,398,844
FEEDING AND DISCHARGING ARRANGEMENT FOR MULTILAYER PRESSES
Bengt Carlsson and Börje Hedin, Motala, Sweden, assignors to Aktiebolaget Motala Verkstad, Motala, Sweden
Filed Dec. 20, 1965, Ser. No. 515,026
Claims priority, application Sweden, Dec. 21, 1964, 15,497/64
9 Claims. (Cl. 214—16.6)

Apparatus for feeding and discharging workpieces into and from storey openings formed by a multilayer press, said apparatus including a platform for each of said storey openings adapted to register with the openings and move to and from the openings. Means are provided for supplying fluid under pressure through a plurality of aper-

tures formed in the upper surface of each of said platforms for producing a cushion of fluid over the platforms

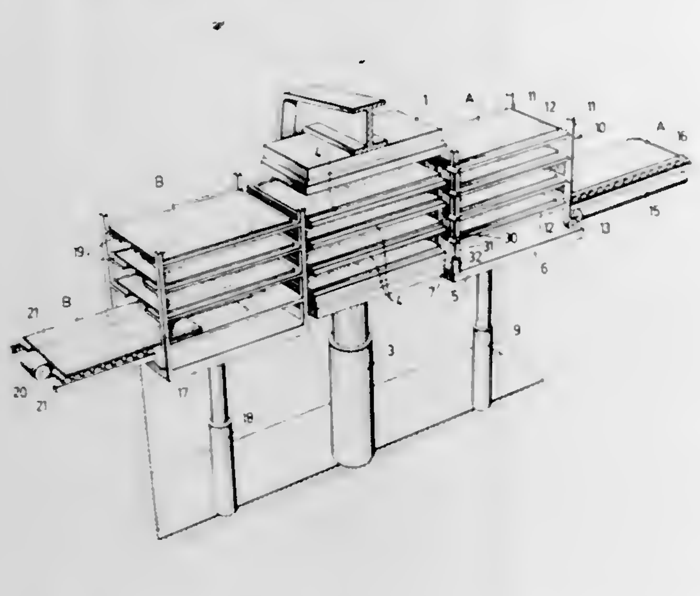

in order to facilitate the introduction and removal of the workpieces to and from the platforms.

3,398,845
OFFSHORE EQUIPMENT AND PERSONNEL TRANSFER SYSTEM
Renic P. Vincent, Tulsa, Okla., assignor to Pan American Petroleum Corporation, a corporation of Delaware
Filed Oct. 26, 1966, Ser. No. 589,548
2 Claims. (Cl. 214—152)

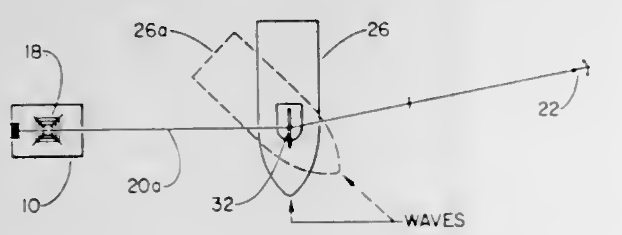

This concerns a method for transferring objects between a floating vessel on a body of water and a fixed platform having a working deck supported above the body of water. A transfer line is connected at one end to the top of a derrick supported above a platform and the other end of the transfer line is anchored to the floor of the body of water at a distance of about 2,000 feet or more. A floating vessel having a swivel fork means supported above a superstructure is maneuvered to engage the transfer line between the platform and its anchor. The floating vessel is moved outwardly until the transfer line is held in firm contact with the fork. Then objects are transferred along the line between the floating vessel and the platform.

3,398,846
BUMPER MOUNTED SPARE TIRE CARRIER
Billie J. Ragan, 120 Withington St., and Vincent A. Beevers, 6249 W. 2nd St., both of Rio Linda, Calif. 95673
Filed Sept. 12, 1966, Ser. No. 578,684
8 Claims. (Cl. 214—454)

A bumper assembly extending between the closely spaced apart rear ends of the side rails of a pickup truck frame and including a center section extending between the side rails and supported at one end for horizontal swinging about a vertical axis, the center section of the bumper including a support arm having one end pivotally supported therefrom generally centrally intermediate the opposite ends of the center section for oscillation relative to the latter and for reception of the free end of the support arm between the side members of the truck frame

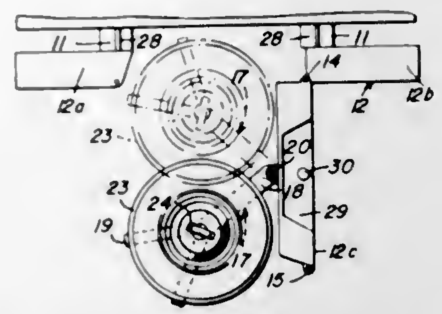

and provided with spare tire support means adapted to support a spare tire therefrom.

3,398,847
CONTAINER AND SAFETY CLOSURE THEREFOR
Edward J. Towns, 53 Mounthaven Drive, Livingston, N.J. 07039
Filed Apr. 6, 1967, Ser. No. 628,989
9 Claims. (Cl. 215—9)

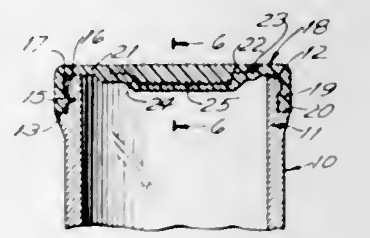

A container and replaceable safety closure therefor wherein the container and closure have portions that are yieldable to interengage when the closure is snapped over the container mouth and wherein the outer diameter of the closure is not greater than the portion of the container on which it rests so as to render it extremely difficult to pry off of the mounted closure and a flush fitted flap integral with the closure that may be swung from its flush position on the closure to an open grasping position by the user to facilitate forcible removal of the closure from said container, the dimensions of the closure and the normally flush position of said flap making it difficult for children to remove the closure from the container, thus providing safe storage for dangerous container contents.

3,398,848
PACKAGING STRUCTURE
Donald W. Donovan, Glastonbury, Conn., assignor to Monsanto Company, St. Louis, Mo., a corporation of Delaware
Filed Apr. 7, 1967, Ser. No. 629,245
12 Claims. (Cl. 215—9)

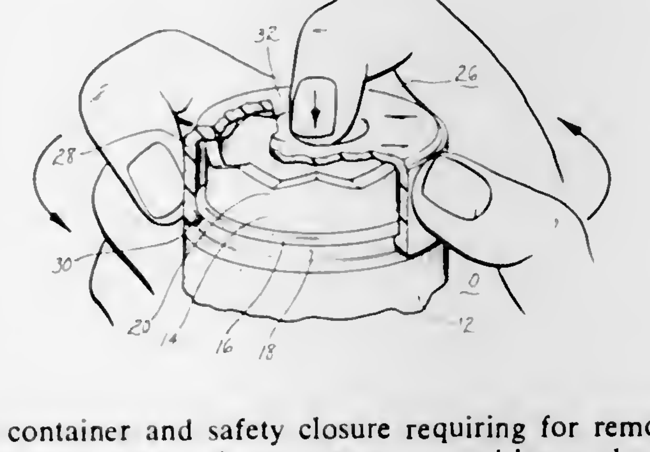

A container and safety closure requiring for removal, initial engagement of cam means, comprising a plurality of protuberances on either the closure or container which fit within cooperating depressions on deforming the closure endwall, followed by rotation, wherein the protuberances ride out of the depressions to disengage the means for locking the closure on the container.

3,398,849
COLLAPSIBLE PALLET BOX
Carey K. Eastwood, Box 812, Waterville, Wash. 98858
Filed July 11, 1966, Ser. No. 564,098
3 Claims. (Cl. 217—15)

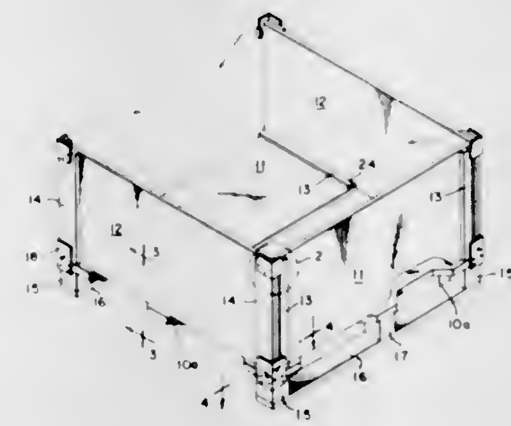

A collapsible pallet box having fold-down side and end panels which pivot at their lower ends on pins riding in respective slots formed in angle brackets mounted at the bottom corners of the box.

3,398,850
COLLAPSIBLE CONTAINER UNITS FOR GOODS TRANSPORT
Henry John Kennard, 128 Lonsdale Ave., East Ham, London, E.6, England
Filed Sept. 12, 1966, Ser. No. 578,818
Claims priority, application Great Britain, Sept. 13, 1965, 38,984/65; June 22, 1966, 27,835/66
3 Claims. (Cl. 220—6)

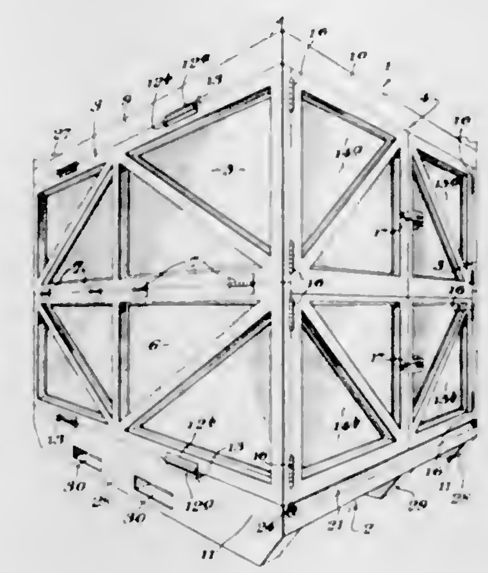

A collapsible parallelepipedal freight container has a unit top, a unit base, two opposite sides releasably secured at their upper and lower edges to the base and top and each divided horizontally into similar sections secured together by one-way hinges which provide for the sides to be collapsed inwards, and at each end an end wall horizontally divided into two flaps secured by two-way hinges to adjacent end edges of the sides so that the flaps can be out-turned as doors and can be inturned against the sides to permit the container to be collapsed into a compact unit comprising the closely superimposed sides and ends sandwiched between the top and base.

3,398,851
TANK SEAL WITH FINGER
Kenneth D. Challenger and James H. McBrien, Houston, Tex., assignors to Helmerich & Payne, Inc., a corporation of Delaware
Filed Feb. 9, 1966, Ser. No. 526,293
6 Claims. (Cl. 220—26)

A secondary tank seal for a floating roof, the seal being flexible and joined to the flange of a movable shoe. One end of the flexible seal rides along the tank wall, and carries spring members which resiliently carry the seal over obstacles.

3,398,852
SECURITY PLUG CLOSURES FOR RECEPTACLES
Jacob M. Katz, 225 E. 57th St., New York, N.Y. 10022
Filed June 8, 1967, Ser. No. 644,632
10 Claims. (Cl. 220—39)

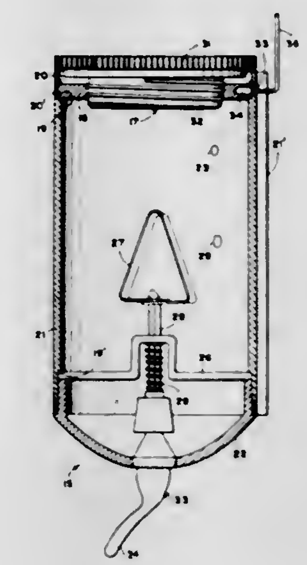

A knurled lid covering the mouth of the receptacle, is the head of a screw plug which is releasably threadedly engaged in a ring nut, and said plug can be screwed into the ring nut to be in tight relation therewith. The ring nut is rotatably fitted inside said receptacle, near the mouth thereof; such being its only permitted movement; the receptacle serving as its bearing. Said ring nut has a small socket in its periphery and there is a small hole through the receptacle wall. When said tight relation exists, the plug when turned, and the ring nut, will move as a unit,

and said socket will come into registry with said hole. To remove the plug, the end of a strong pin is inserted into said hole, and then upon turning the plug, said pin will find said socket, thus holding the ring nut against rotation, whereupon the plug can be turned free of the ring nut. To replace the plug, it is screwed tight into the ring nut while the pin holds said nut against rotation. The receptacle, if it is to be mounted on a wall, can be secured from within its interior.

3,398,853
SHEAR STUD VESSEL CLOSURES AND SHELL JOINTS
Svend M. Jorgensen, Tenafly, N.J., assignor to Foster Wheeler Corporation, Livingston, N.J., a corporation of New York
Filed Apr. 13, 1966, Ser. No. 542,328
18 Claims. (Cl. 220—55)

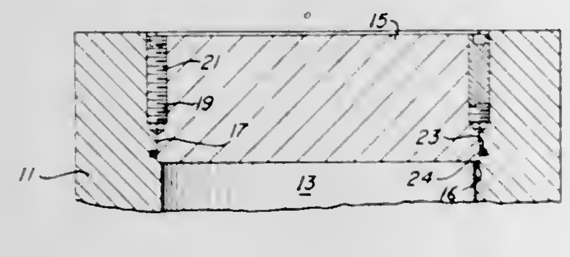

A shear stud vessel closure and shell joint arrangement utilizing a plurality of threaded bolts at a closure or joint interface as a retaining means for the closure or joint and having a closure plug of outside dimensions larger than the inner dimensions of the vessel and smaller than the inner dimensions of the closure opening so that the plug fits within the opening and abuts upon a shoulder formed between the inner dimensions of the vessel and the closure opening.

3,398,854
FRAME STRUCTURE FOR A CONTAINER
Fred Neuberger, 10 Maple Ave., New Rochelle, N.Y. 10805
Filed Aug. 3, 1966, Ser. No. 570,078
11 Claims. (Cl. 220—80)

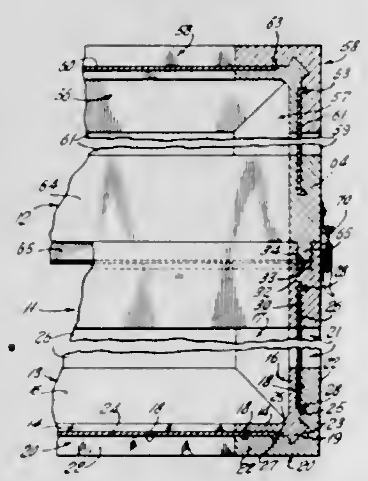

A receptacle with rectangular walls comprises a frame structure including pairs of mating inner and outer frame members along the receptacle edges, the frame members being angle members with slidably engaging dovetail tongue and groove along their confronting corners. Each of the outer frame members is provided with a longitudinal groove and the wall panels are provided with edge flanges engaging the corresponding grooves, the panel borders being sandwiched between the frame member confronting faces. Corner members are secured to the receptacle corners and hold the panels and frame members in an assembled condition.

3,398,855
PACKAGING UNIT
Elmer W. Griese, Jr., Wheeling, Ill., assignor to Ekco Products, Inc., Wheeling, Ill., a corporation of Illinois
Filed Mar. 4, 1966, Ser. No. 531,934
4 Claims. (Cl. 220—93)

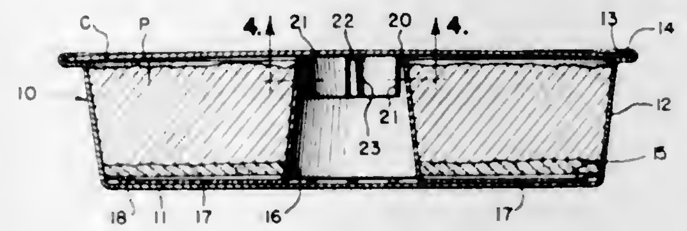

A packaging unit wherein the product holding area is in the form of an inner tray of high impact polystyrene resin composition or the like which is lifted from an outer container while the product is supported on said tray via an integral central hollow stem rising from the bottom of said tray.

3,398,856
END PANEL LOCK FOR WRAP-AROUND CARRIER
Earl J. Graser, Monroe, La., assignor, by mesne assignments, to Olinkraft, Inc., West Monroe, La., a corporation of Delaware
Filed Nov. 17, 1966, Ser. No. 595,130
4 Claims. (Cl. 220—115)

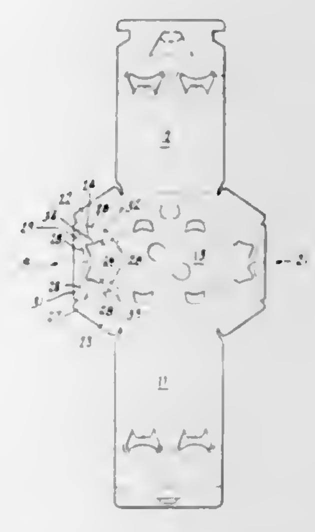

A wrap-around container for packaging a plurality of necked articles, the container including a hinged end wall structure with indentation-forming tuck panels. Locking tabs on the tuck panels to frictionally engage the necks of ones of the packaged articles and thereby lock the tuck panels in a tucked position.

3,398,857
CONTAINER AND DISPENSER WITH TRAP MEANS
Peter Alio, 7706 30th Ave., Jackson Heights, N.Y. 11372
Filed Mar. 11, 1966, Ser. No. 533,615
7 Claims. (Cl. 221—190)

This invention is directed to a pill dispenser for dispensing in a positive manner one pill at a time each time the dispenser is tilted from a normal upright position to a dispensing inverted position. In one form of the invention the dispensing container comprises an enclosure having a sub-cavity located at the lowest point of the interior of the enclosure and which sub-cavity communicates through

a single opening with a dispensing passageway through which the pill is dispensed when the container is tilted to a dispensing position. The construction and arrangement of the sub-cavity is such that a pellet gravitates thereinto and is disposed therein when the container is in the normal upright position. In dispensing, the sub-cavity functions to temporarily trap the pellet therein and thereby blocks or prohibits a succeeding pellet from entering into the passageway. As the container is further rotated to a dispensing position, the particle or pills in the main chamber are gravitated away from the sub-cavity and the pill disposed in the passageway is then free to be dispensed therethrough.

In another form of the invention a movable ejector means is operatively associated with the lowermost point

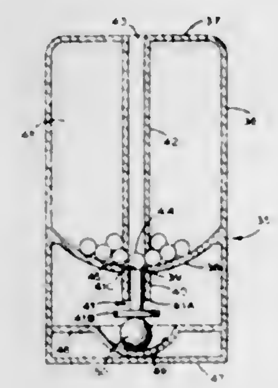

of the main chamber bottom wall. The movable ejector is disposed in alignment with a channelway or passageway through which the particle or pills are successively dispensed. The end of the passage is spaced over the low point in alignment with the pill resting thereat in the normal upright position of the container. In this form of the invention a means is provided for effecting reciprocal movement of the injector inwardly toward the passageway upon the tilting of the dispenser from an inoperative upright position to an operative dispensing position. In doing so, the movable ejector positions the pellet to be dispensed into the passageway and at the same time blocks the opening to the passageway to prohibit any succeeding pellets from entering thereinto. Upon uprighting the container, the ejector and the pellets gravitate back to their normal inoperative position.

3,398,858
TINTING APPARATUS AND METHOD
Ralph T. Holloway, Rockford, Ill., assignor to The Valspar Corporation, Rockford, Ill., a corporation of Delaware
Filed June 27, 1966, Ser. No. 560,516
3 Claims. (Cl. 222—30)

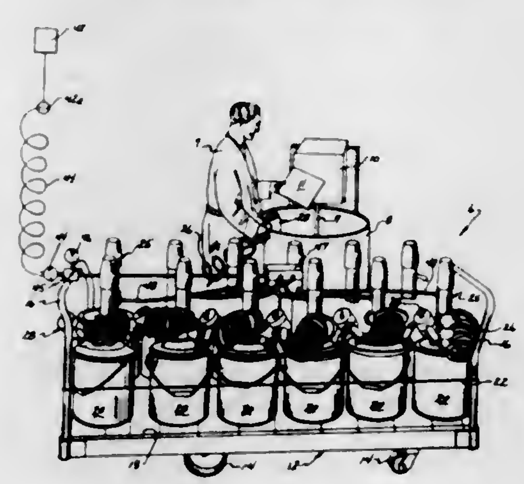

A vehicle holding a plurality of colorant containers, each provided with an air-powered pump and a dispensing gun. The vehicle and supply are placed at a remote position from the tinting tank. The gun is positioned at the tank, and the colorant is pumped through its nozzle. The flow is metered, and the operator valves the flow to limit the quantity dispensed. The agitator is rotated to completely mix the ingredients.

3,398,859
MEASURING PUMP
Carl H. Mueller, Pasadena Hills, Mo., assignor to McNeil Corporation, Akron, Ohio, a corporation of Ohio
Filed May 2, 1966, Ser. No. 546,737
11 Claims. (Cl. 222—41)

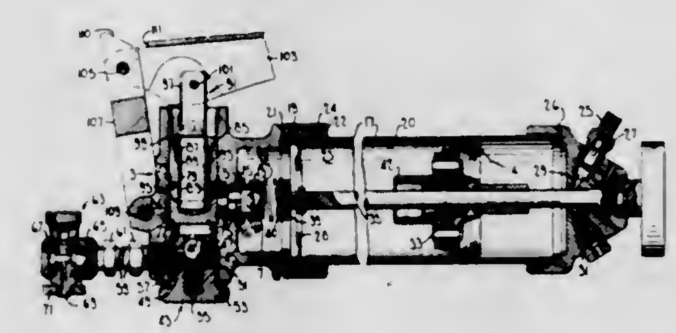

A pump for delivering measured amounts of lubricant under pressure comprises a pump cylinder having inlet and outlet passages each passage having a reverse check valve therein. Inlet closure means is also provided for the inlet check valve. A lubricant supply cylinder contains a follower piston biased to force lubricant toward the inlet. The follower piston carries means to operate the inlet closure means when lubricant is substantially exhausted.

In the pump cylinder is a pump piston which upon a pressure stroke covers the inlet. Upon a partial return stroke the pump piston uncovers said inlet. In the pump piston is a lost-motion plunger for driving the pump piston across the inlet and delivering lubricant through the outlet. Upon retractive lost motion between the plunger and the pump piston the latter is retracted sufficiently to open the inlet. This permits entry of lubricant under pressure from the follower piston. The entering lubricant pushes back the pump piston to take up said lost motion and fills the pump cylinder. The plunger carries an index which when reached by an indicator part on the pump piston shows that the pump cylinder is full. If not reached, the indication is that the cylinder is short of being full. An oscillating linkage drives the plunger between fixed advanced and retracted limits. The retracted limit determines where said index is located on the plunger.

Between the pump cylinder and the lubricant supply cylinder is a manually operable bleeder valve for eliminating any entrapped air after the supply cylinder has been loaded with lubricant and attached, before pumping starts. From the pump outlet extends a lubricant line at the end of which is a swiveling connector nozzle.

3,398,860
METERING DEVICES FOR LIQUIDS
Paul Bättig, Basel, Switzerland, assignor to Cutter Laboratories, Inc., Berkeley, Calif., a corporation of Delaware
Filed Oct. 18, 1965, Ser. No. 496,839
8 Claims. (Cl. 222—46)

1. In a device for fine metering of liquids, which consists of a tubular body to which the liquid is supplied at one end, and from which the liquid is withdrawn at the other end, and a pin fitting exactly in the tubular body and inserted in one end thereof so as to be axially displaceable, providing a helical capillary channel in the internal sur-

face of the tubular body or in the external surface of the pin, the improvement consisting in that the tubular body has at one end a nozzle and at its other end a wide axial bore, into which opens a connecting nozzle provided on the side of the body, the nozzles being connected by a threaded bore, and that the pin, the threaded part of which is screwable into this threaded bore, is guided in a

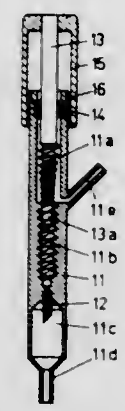

sealing ring inserted in the end part of the body and closing the bore of the latter, and is provided at its outer end with a cap fitting over the end of the body, the edge of which serves as a marker for at least one scale provided on the outside of this end part of the body and indicating the flow rate set for a certain pressure and a certain viscosity of the liquid.

3,398,861
MOVABLE MATERIALS DISPENSING ARRANGEMENTS
Helmut Ulrich, Munich-Allach, Germany, assignor to European Engineering Trust Reg., Vaduz, Liechtenstein
Filed May 9, 1966, Ser. No. 548,443
Claims priority, application Germany, May 11, 1965, E 29,270
11 Claims. (Cl. 222—52)

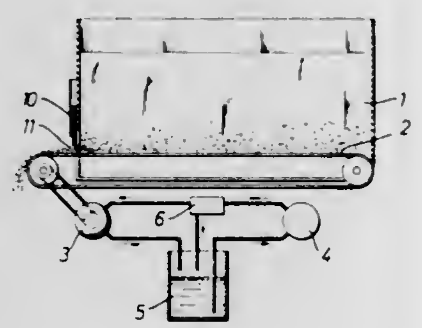

A material dispensing arrangement including a movable vehicle having a storage bin mounted on the vehicle for the purpose of retaining the material to be dispensed. The storage bin is equipped with an exit and a dispensing device which allows the stored material to be dispensed. An adjustng mechanism adjusts the dispensing device so as to allow more or less material to be dispensed depending upon the speed of the vehicle. The adjusting mechanism is operated by controlling signals generated in conformance with the speed of the vehicle so that the amount of the material dispensed varies in accordance with variations in the speed of the vehicle.

3,398,862
LIQUID PROPORTIONING AND MIXING SYSTEM
John A. Willis, San Antonio, Tex., assignor to The Triplem Company, Inc., a corporation of Texas
Filed Nov. 28, 1966, Ser. No. 597,368
5 Claims. (Cl. 222—57)

A liquid handling device for proportionately admixing two or more liquids and including a float operated cam actuated liquid inlet means for one of the liquids. The liquid entering through the liquid inlet means impinges against and overbalances a lever means which is opera-

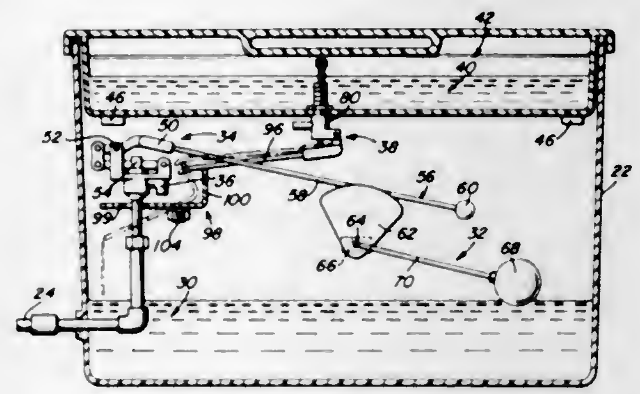

tively connected to a normally closed valve means whereby the valve means is opened to proportionately admix another liquid with the liquid entering through the inlet valve means.

3,398,863
ACTUATING DEVICE FOR AEROSOL DISPENSER HAVING TIMING CONTROL
Walter F. Kolodziej, La Salle, Ill., assignor to General Time Corporation, New York, N.Y., a corporation of Delaware
Filed Dec. 28, 1965, Ser. No. 517,022
7 Claims. (Cl. 222—70)

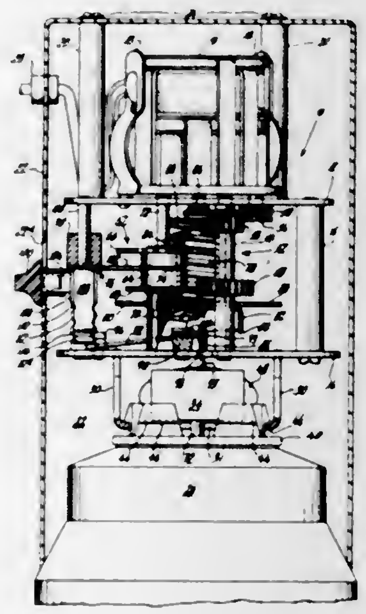

An attachable timing mechanism for automatically and periodically operating a valve of an aerosol container to dispense a spray of the container's contents. A spring is gradually compressed or armed as a cam stud is traversed from the low point to the high point of a rotatably driven helical cam track and then, as the cam track high point is rotated past the stud, the spring is released to force the cam track high point against a lever thereby depressing the valve. The cam track is driven by a timing motor through a gear train which may be shifted between a fast position, a slow position, and a neutral position.

3,398,864
ADAPTER APPARATUS FOR AUTOMATIC AEROSOL DISPENSER
Walter F. Kolodziej, La Salle, Ill., assignor to General Time Corporation, Stamford, Conn., a corporation of Delaware
Filed June 24, 1966, Ser. No. 561,642
8 Claims. (Cl. 222—180)

An adapter for an automatic aerosol dispenser integrally formed of plastic material and having a slotted, out-

wardly extending annular shoulder for resiliently fitting into the cap recess of an aerosol can. The adapter is urged resiliently downwardly until an annular shoulder engages the top of the aerosol can valve housing; thus precisely aligning the adapter therewith. The adapter further comprises a pair of upstanding shoulders having opposed parallel side walls for guiding a nozzle having conforming, closely adjacent side walls. A pair of coplanar slots in the upstanding shoulders are oriented with their side walls parallel to the top of the valve housing and their

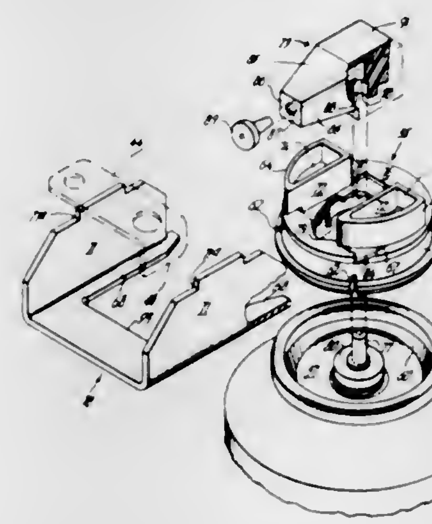

inner walls parallel to the upstanding opposed parallel walls of the shoulders. Thus, the adapter may be engaged by a U-shaped channel member of an automatic aerosol dispenser to establish a controlled dimension between the top of the valve housing and the actuator member thereof and to orient the nozzle. Additionally, the upstanding shoulders are provided with L-shaped recesses conforming to the opposed parallel vertical walls and the slots to facilitate low tolerance manufacture of the adapter.

3,398,865
PLANTER WITH ROTARY AGITATOR
Vedick A. Erickson, Naperville, Daniel Henry, Downers Grove, and Dario E. Lienemann, Clarendon Hills, Ill., assignors to International Harvester Company, Chicago, Ill., a corporation of Delaware
Filed June 14, 1967, Ser. No. 646,031
8 Claims. (Cl. 222—317)

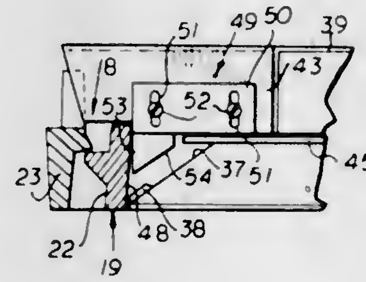

A seed dispensing arrangement in a planter hopper includes a horizontal rotatable seed plate having a downwardly inclined peripheral portion on which seed from the hopper is deposited to be moved thereby to an outlet. Agitation and improved flow of the seed carried by the plate is achieved by mounting a flat disk on the seed plate to rotate with it having a diameter less than that of the seed plate but having a peripheral portion overhanging the downwardly inclined seed engaging portion of the seed plate.

3,398,866
DISHWASHER PUMP ASSEMBLY WITH SOUND DAMPED IMPELLER
Frank E. La Flame, Dayton, and Richard E. Forrest, Lima, Ohio, assignors to General Motors Corporation, Detroit, Mich., a corporation of Delaware
Filed Nov. 12, 1965, Ser. No. 507,435
1 Claim. (Cl. 222—333)

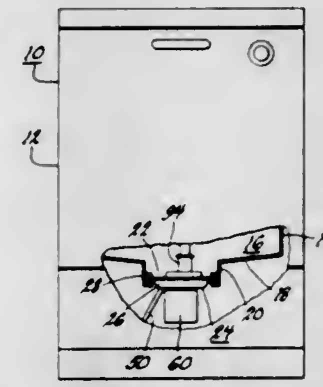

A dishwaser pump having a volute-shaped housing and an impeller with an axial inlet and a radial outlet and wherein the housing includes a cutoff shoulder in close spaced relationship with radial vanes on the impeller, the impeller having nine radial vanes equally spaced with one another on a highly nonrepetitive pattern to suppress sound frequencies at an impeller drive speed of 3400 r.p.m.'s per minute.

3,398,867
NECKTIE HOLDING DEVICE FOR USE WITH CLOTHES HANGER
William Paul Taylor, Laguna Beach, Calif., and Manfred Steinfeld, 9008 Tamaroa Terrace, Skokie, Ill. 60076; said Taylor assignor to said Steinfeld
Filed Nov. 29, 1965, Ser. No. 510,210
3 Claims. (Cl. 223—87)

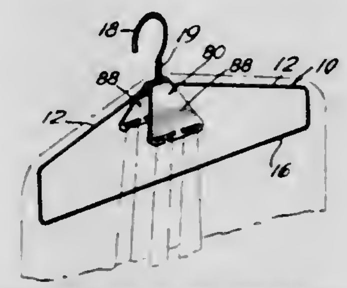

1. A necktie holding device for use with a conventional clothes hanger comprising, a flexible plastic sheet member having a body portion, said body portion having a pair of medial transverse folds therein providing a pair of wings each having a plurality of spaced apart slots formed therein for supporting a necktie in a folded arrangement engaged through each of said slots and a perforation formed between said folds, said perforation having a diameter sufficient to permit passage of the hook of said hanger for supporting the device on said hanger exterior of a garment also hung thereon such that said necktie is readily visible for selection by the wearer, said sheet member being of material which is sufficiently flexible to permit said wings to hang in vertical disposition from said hook.

3,398,868
APPARATUS FOR SEVERING GLASS SHEETS
Edward W. Curtze, Pittsburgh, George O. Wehner, Bethel Park, and John M. Barsom, Pittsburgh, Pa., assignors to PPG Industries, Inc., a corporation of Pennsylvania
Filed Oct. 4, 1966, Ser. No. 584,145
2 Claims. (Cl. 225—103)

1. Apparatus for severing glass sheets, comprising:

(I) First supporting means, comprising—

(a) a rocker arm means pivotally mounted to each side of said support;

(b) a pair of glass contacting means rotatably mounted to said rocker means, each of said glass contacting means being mounted equidistant on said rocker from said pivotally mounted connection with said support means;
(c) said pivot mounting being in a plane different from that of said rotatable mounting between said glass contacting means, and said rocker arm means.

(II) Second supporting means, comprising—
(a) rocker arm pivotally mounted to each side of said support means;
(b) a second pair of glass contacting means rotatably mounted to said rocker arms, said rotatable mountings being equidistant from said pivot means;

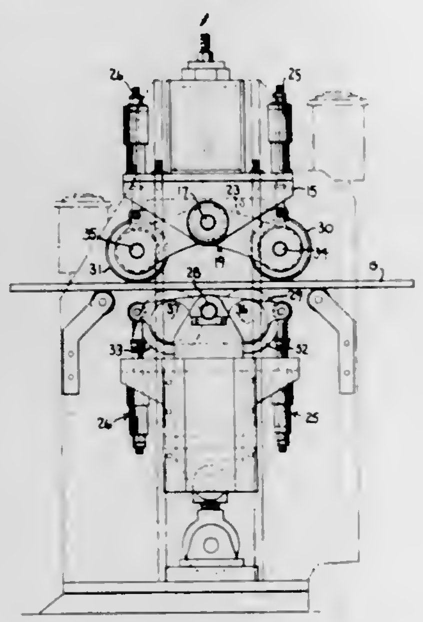

(III) The rotation points of one pair of glass contacting means being spaced at a greater distance from the pivot point than the rotation points of another of said pair of glass contacting means;
(IV) Said first supporting means being placed in apposition with said second support means, and having said first and said second pivot points of said rocker arms positioned in a line relative to each other, so that each rocker arm articulates about a pivot point, the pivot points being in a line.

3,398,869
DEVICE FOR CENTERING CONTINUOUSLY MOVING FABRIC
July Rafailovich Zeldin, ulitsa Volkova 21, kv. 57, Ivanovo, U.S.S.R.
Filed Dec. 13, 1966, Ser. No. 601,370
2 Claims. (Cl. 226—23)

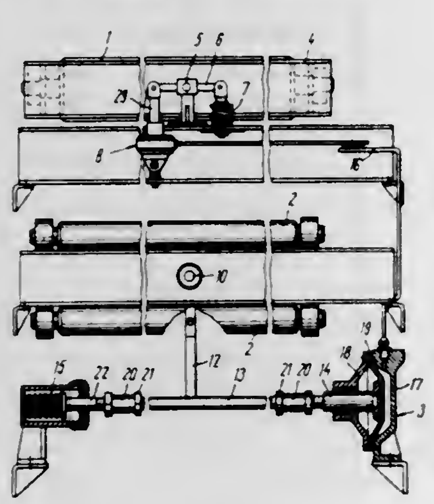

1. A device for centering continuously moving fabric, mainly in finishing machines used in the textile industry, said device comprising: centering rollers intended for the fabric to run on them and installed on a turning frame; a drive for said turning frame; at least one roller contacting the fabric along its entire width and mounted on a turning support, the turning axis of said support being arranged in one and the same plane with the turning axis of said frame carrying the centering rollers; and said drive including a booster connected to said support and actuating said turning frame.

3,398,870
CONTROLLED AIR FILM BEARING
Philip J. Mullan, Poughkeepsie, N.Y., and Sandford Platter, Boulder, Colo., assignors to International Business Machines Corporation, Armonk, N.Y., a corporation of New York
Filed Jan. 23, 1967, Ser. No. 611,149
10 Claims. (Cl. 226—97)

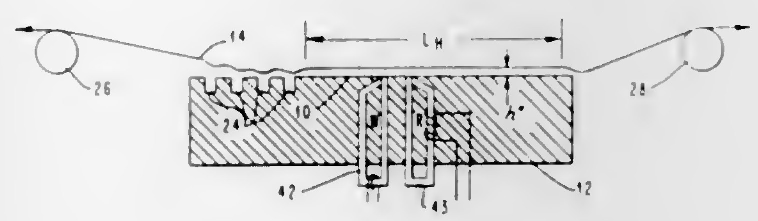

The apparatus contains grooves extending across the entire width of a surface of a body member near the edge thereof first encountered by a flexible material such as a tape which passes thereover. The grooves are symmetrical with respect to a center line of the surface extending in the direction of material travel and also extend angularly from the centerline across the surface in the direction of travel of the material over the surface. The grooves themselves are of a predetermined number and have a predetermined depth, width and spacing with respect to the tape passing thereover to produce an air pumping action which provides a particular spacing of the tape with respect to the surface following the grooves.

3,398,871
APPARATUS FOR GUIDING METAL STRIP
Fritz Ungerer, deceased, late of Pforzheim, Germany, by Irma Ungerer, sole heir, Pforzheim, Germany, assignor to Irma Ungerer, Pforzheim, Germany
Filed Apr. 1, 1966, Ser. No. 539,586
6 Claims. (Cl. 226—173)

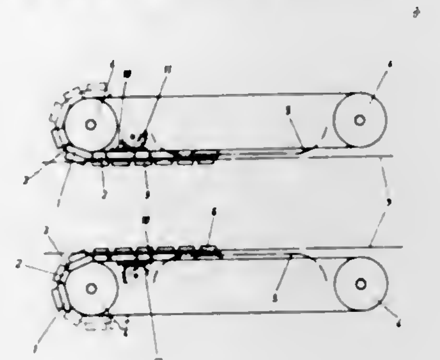

Apparatus for guiding metal strip in which a pair of endless link chains are each guided about a pair of guide wheels so that each chain has a straight portion laterally spaced from and parallel to a straight portion of the other chain, in which the links of each chain carry on the side thereof facing the other chain, mouth pieces open toward the other chain and adapted to receive edges of metal strip to be guided by the apparatus, in which the links of each chain are provided on the other side thereof with rack teeth, and in which driving pinions arranged between the guide wheels are in mesh with the rack teeth, which pinions are the only components of the apparatus for driving the chains in the same direction, whereby the straight chain portions are driven at uniform speeds.

3,398,872
HAND-OPERATED STAPLER
Thomas G. Monahan, 5342 Noble Ave., Sherman Oaks, Calif. 91403
Filed May 16, 1966, Ser. No. 550,299
2 Claims. (Cl. 227—110)

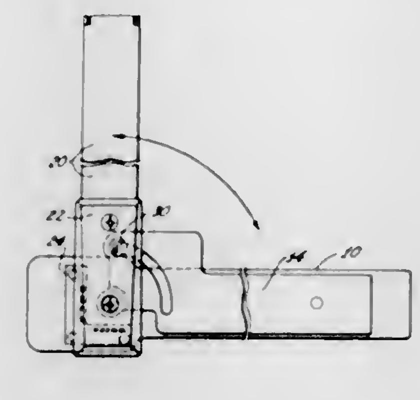

A stapler employing a conventional base and staple chute is provided with an intermediate arm which is pivotally mounted to the base. The staple chute is pivotally mounted at its forward end to the intermediate arm to be rotatable in a plane generally parallel to the base. In this way, staples may be ejected either in the conventional position of the chute with respect to the base, or, by pivoting the chute on the intermediate arm at right angles to the conventional position.

3,398,873
SUMPS AND NOZZLES FOR SOLDERING MACHINES
Howard W. Wegener, Wilton, and Kenneth G. Boynton, Milford, N.H., assignors to Hollis Engineering, Inc., a corporation of New Hampshire
Filed Sept. 7, 1966, Ser. No. 577,669
10 Claims. (Cl. 228—37)

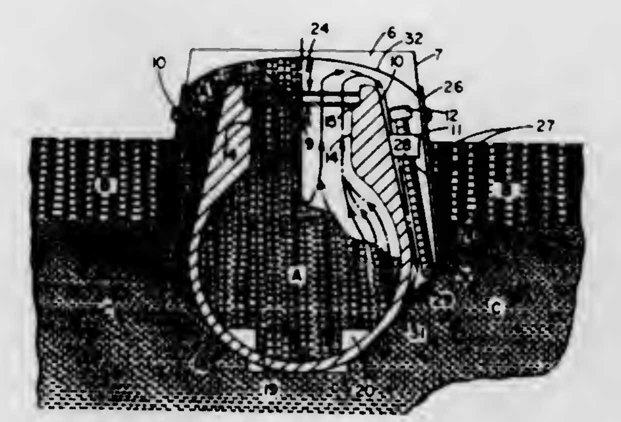

1. In a mass fountain soldering machine using a mixture of solder and oil and having a sump and nozzle adapted to be partially submerged in a reservoir containing a bottom layer of solder with a layer of oil floating thereon, an exterior sluice adapted to collect the overflow from said nozzle and conduct said mixture of oil and solder within the interior of said sluice through the said layer of oil exterior to said sluice, discharging said mixture into said bottom layer of solder.

3,398,874
SOLDER HOLDER AND DISPENSER
Clarke L. Sauer, 2959 Farnam St., Omaha, Nebr. 68131
Filed Jan. 6, 1967, Ser. No. 607,840
8 Claims. (Cl. 228—57)

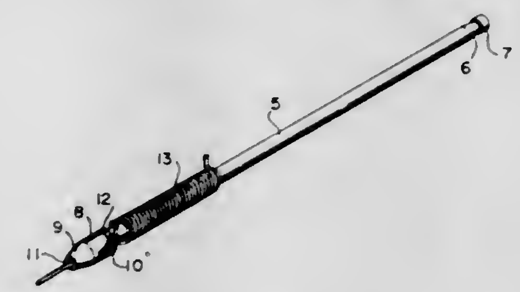

A solder wire dispenser including a rod for supporting a soldler wire with means at one end of the rod to receive and guide one end of the solder wire to solder location.

3,398,875
EGG CARTONS
Gerald A. Snow, Cumberland Foreside, and Harold A. Doughty, Cape Elizabeth, Maine, assignors to United Industrial Syndicate, Inc., doing business as Portland Company Division of United Industrial Syndicate, Inc., Portland, Maine, a corporation of New York
Filed Dec. 30, 1966, Ser. No. 606,118
10 Claims. (Cl. 229—2.5)

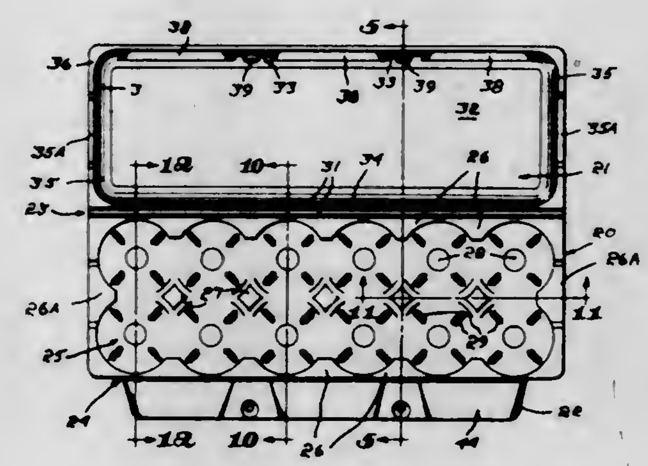

Egg cartons having a cover hinged to the rear edge of a carton bottom and a locking flap hinged to the front edge thereof, the locking flap having a projection which extends through a hole in the front wall of the cover when the flap is positioned to underlie the front wall of the cover when the cover is closed, the flap and cover front wall having vertical channels establishing inner and outer wall portions, one set of wall portions being more nearly vertical than the other set of wall portions, together with a special flap hinge and with a cover front wall having seats internally of the cover front wall engageable by the upper edges of the flap.

3,398,876
RECLOSABLE PACKAGE
Frank A. Ward, Rockford, Ill., assignor to Anderson Bros. Mfg. Co., Rockford, Ill., a corporation of Illinois
Filed Feb. 6, 1967, Ser. No. 614,333
12 Claims. (Cl. 229—45)

A container having a peripheral flange and a separable flange portion which may be lifted to peel a sealed cover member. Protrusions are provided on the container to en-

gage the separated flange portion and hold the cover member in reclosed position. The peripheral flange is dis-

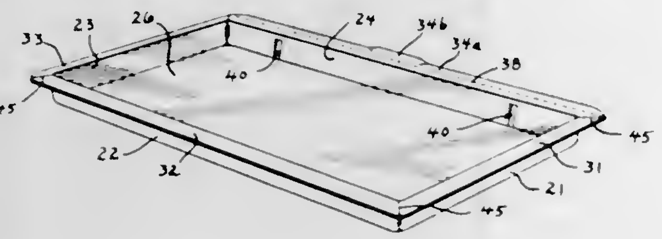

posed downwardly to rigidify the container and provide better reclosing.

3,398,877
RECLOSABLE PACKAGE
William P. Jacobson, Rockford, Ill., assignor to Anderson Bros. Mfg. Co., Rockford, Ill., a corporation of Illinois
Filed Apr. 10, 1967, Ser. No. 629,445
10 Claims. (Cl. 229—45)

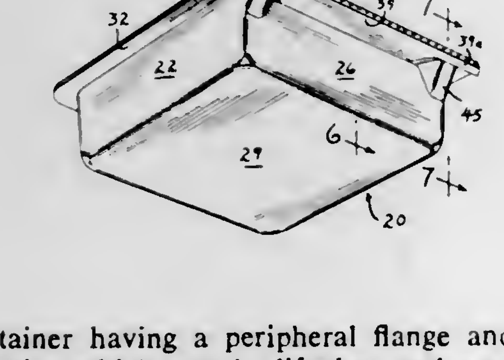

A container having a peripheral flange and an outer flange portion which may be lifted to peel a sealed cover member. A groove is provided for engaging the outer flange portion and holding the cover member reclosed. Ribs are provided at the sides of the container to reinforce the peripheral flange against uplift and hold the cover member down.

3,398,878
SKIN DIVING APPARATUS
Ronald G. Quiram and Gaylord M. Borst, Galesburg, Ill., assignors to Outboard Marine Corporation, Waukegan, Ill., a corporation of Delaware
Filed Dec. 28, 1965, Ser. No. 516,857
26 Claims. (Cl. 230—56)

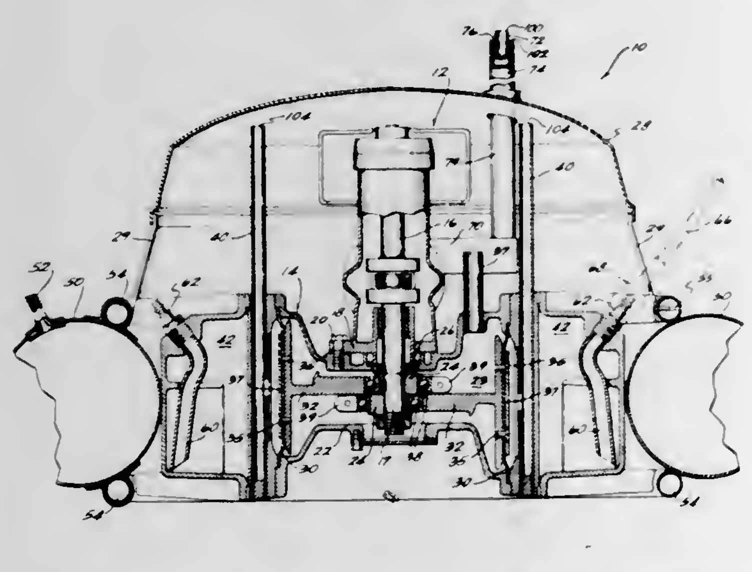

Disclosed herein is a skin diving apparatus comprising an engine-air compressor assembly including an upright combustion air inlet and exhaust gas pipe and flexible hoses for delivering compressed air. The assembly is supported from a pair of rings which removably receive an inflatable rubber tube to afford flotation of the assembly in water with the compressor portion thereof partially in the water. One of the rings also serves as a base to support the assembly on a solid surface.

3,398,879
ASYMMETRIC ION PUMP AND METHOD
Brian David James, Menlo Park, and Theodore K. Tom, Sunnyvale, Calif., assignors, by mesne assignments, to The Perkin-Elmer Corporation, Norwalk, Conn., a corporation of New York
Filed Oct. 7, 1966, Ser. No. 600,297
3 Claims. (Cl. 230—69)

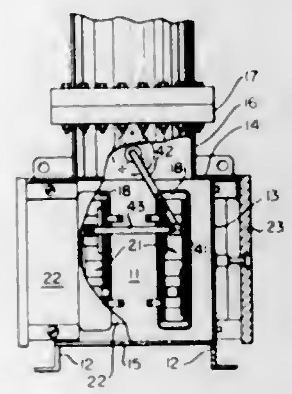

1. In an electronic vacuum pump, means providing a pump chamber, an anode, two cathodes each including reactive material associated with opposite sides of said anode, said anode and cathodes disposed in said chamber, means for applying a voltage between said cathodes and said anode, and means for producing a sputtering yield from one cathode which is different than the sputtering yield from the other cathode.

3,398,880
CENTRIFUGAL FAN
Sven Wallin, Taby, Sweden, assignor to Aktiebolaget Svenska Flaktfabriken, Stockholm, Sweden
Filed Dec. 28, 1966, Ser. No. 605,249
Claims priority, application Sweden, Dec. 31, 1965, 17,079/65
6 Claims. (Cl. 230—117)

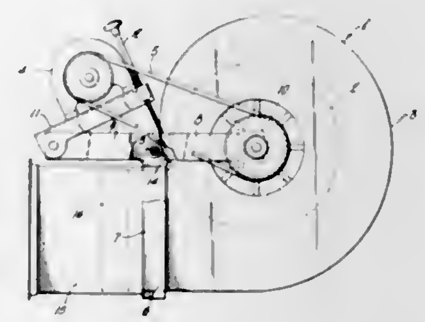

A multiple fan unit wherein each fan is mounted on a common stand by a support structure surrounding the outlet opening of the spiral housing. This support structure provides a connecting flange for the outlet and is provided with oppositely directed arms supporting respectively the fan wheel within the housing and the motor exterior of the housing. The pins mounting the frame on the stand are approximately on the axis of the center of gravity of the fan assembly and are provided with vibration-damping means.

3,398,881
COMPRESSOR BLEED DEVICE
Paul B. Greenberg, Manchester, and Albert H. Turner, East Hampton, Conn., assignors to United Aircraft Corporation, East Hartford, Conn., a corporation of Delaware
Filed Jan. 10, 1967, Ser. No. 608,382
2 Claims. (Cl. 230—122)

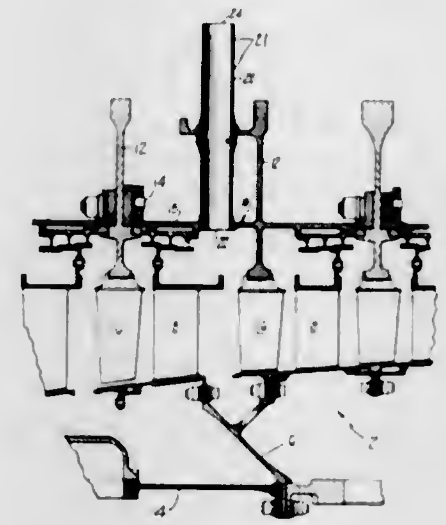

In a gas turbine engine having a compressor consisting of a hollow rotor, a plurality of rows of axially spaced rotor blades alternating and cooperating between a plurality of rows of vanes, a duct rotating with the compressor rotor for bleeding off air from between adjacent rows of vanes and blades and guiding it internally to the hollow portion of the compressor rotor; the duct causing a minimal pressure drop to occur as the bleed air flows from the high pressure region external of the rotor to the lower pressure region internal of the rotor.

3,398,882
CROSSFLOW BLOWER
Kurt Zenkner, Quellenstrasse 22, Grunwettersbach, Karlsruhe, Germany
Filed Mar. 29, 1966, Ser. No. 538,311
Claims priority, application Germany, Mar. 30, 1965, Z 11,443
10 Claims. (Cl. 230—125)

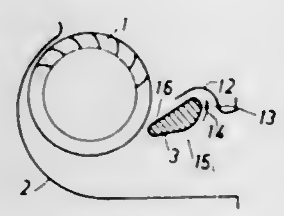

A crossflow blower having a guide sheet continually receding in a spiral from an impeller, the point of closest approach of the sheet to the impeller being at the inlet of the blower. A vortex tongue separates the inlet side of the blower from the outlet side. The vortex tongue approaches the impeller and the gap between the tongue and the impeller decreases in the direction opposite to that of the circumferential rotation of the impeller. The angle between the tangent to the guide sheet at the blower inlet and the tangent to the guide sheet at the blower outlet is less than 90°. The vortex tongue has a wedge angle between 10 and 60° and a return flow channel is provided around the vortex tongue to return air from the pressure to the suction side of the blower.

3,398,883
FAN
Daniel Ariewitz, Des Plaines, Ill., assignor to Chicago Blower Corporation, Franklin Park, Ill., a corporation of Illinois
Filed Sept. 6, 1966, Ser. No. 577,354
5 Claims. (Cl. 230—134)

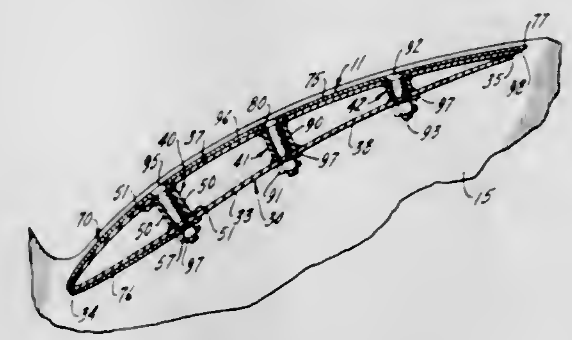

An improved blade liner is provided for an airfoil type fan. The fan blades each utilize a hollow airfoil construction, having a skin of sheet material. In the preferred construction, the upper and lower skin segments are supported by at least one pair of spaced ribs between them and running parallel to the leading edge. The blade liner overlies at least a portion of the upper skin segment, and preferably the entire upper skin segment along with the leading portion of the lower skin segment. Aligned apertures are formed in the upper and lower skin segments penetrating between a pair of ribs. The area surrounding these apertures is most preferably counter-sunk, providing a frusto-conical section in the skin. The counter-sink also extends into the ribs, forming segmental frusto-conical indentations so that the counter-sink extends continuously into and between spaced ribs. To take advantage of this counter-sink construction, the blade liner has dimples with apertures in the center, the dimples and apertures being sized to fit into the counter-sinks in the skin. A bolt having a frusto-conical head is then employed to secure the liner to the blade.

3,398,884
ARMORED VANE
Herbert W. Kaatz and Leo Tobacman, Elyria, Ohio, assignors to Airborne Mfg. Co., Elyria, Ohio, a corporation of Ohio
Filed Apr. 5, 1967, Ser. No. 628,757
8 Claims. (Cl. 230—152)

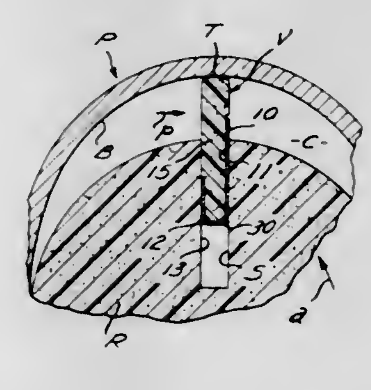

There is disclosed herein a blade or vane for a rotary, sliding-vane type pump having an external wear resistant armor or jacket disposed to engage the rotor slot at the places of high pressure and great wear wherewith to preserve the blade. The shape, form and substance of the armor and blade, as well as the way in which the armor is secured to the blade, are also disclosed.

3,398,885
FOOT OPERATED GAS PUMPS
Charles T. Sundquist, 12566 SE. 53rd St., Bellevue, Wash. 98004
Filed Nov. 14, 1966, Ser. No. 594,004
1 Claim. (Cl. 230—191)

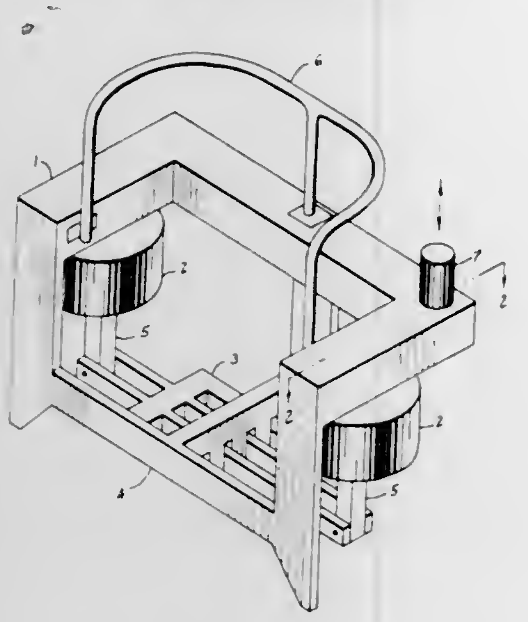

This invention is an improvement in two cylinder, positive displacement, foot operated gas pumps. It is operated by standing on and rocking a treadle with the feet, meanwhile steadying the body by grasping a grab bar with the hands. Improvements include a one piece treadle mounted beneath the two plunger-cylinder combinations and elastic pads for absorbing the impact of the plungers against the cylinder heads.

3,398,886
REFRIGERANT COMPRESSOR
Jerome C. Roach, La Crosse, Wis., assignor to The Trane Company, La Crosse, Wis., a corporation of Wisconsin
Filed Sept. 21, 1966, Ser. No. 581,042
11 Claims. (Cl. 230—206)

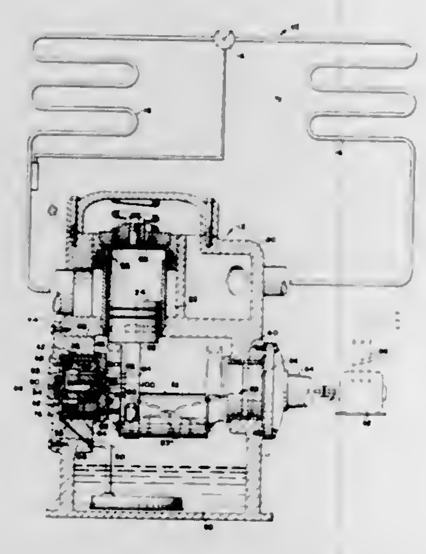

A refrigerant compressor having the expansible chamber of a gear type lubricant pump disposed inside the crankshaft in the area axially coextensive with the crankshaft journal.

3,398,887
ENCAPSULATED COMPRESSOR
Grover D. Fraser, Painted Post, and Fredrick H. Emilson, Corning, N.Y., assignors to Ingersoll-Rand Company, New York, N.Y., a corporation of New Jersey
Filed Aug. 23, 1966, Ser. No. 574,390
10 Claims. (Cl. 230—232)

A compressor unit where the compressor itself is mounted within the receiver. The receiving tank is covered with fiber glass or other sound insulating material.

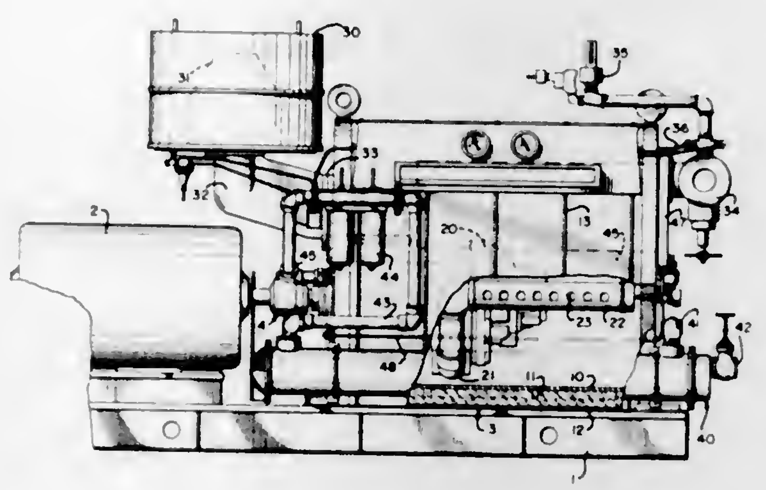

The compressor itself is preferably of the oil flooded type and the oil separator is mounted within an inlet filter.

3,398,888
CENTRIFUGE WITH IMPROVED DISCHARGE ASSEMBLY
Merlin M. Koenecke and Robert E. Waltman, Baton Rouge, La., assignors to Ethyl Corporation, New York, N.Y., a corporation of Virginia
Filed Aug. 18, 1966, Ser. No. 573,302
6 Claims. (Cl. 233—47)

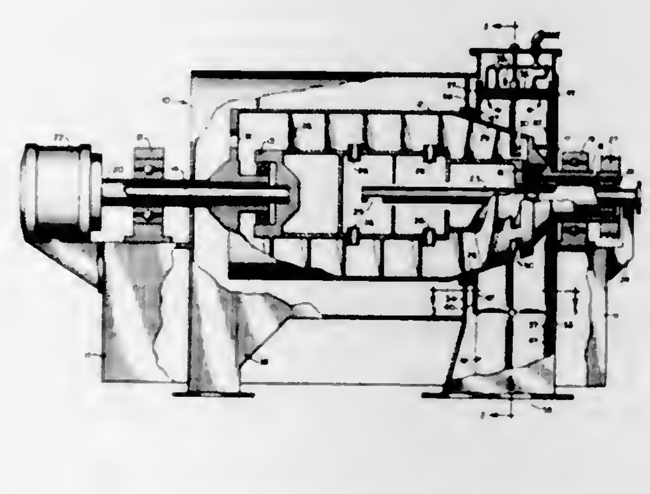

A centrifuge having a bowl rotatably mounted in a housing. A plurality of expansionable and contractable panels are mounted on the interior of the housing opposite the solids discharge end. Pulsating air pressure is supplied to the panels to break up and discharge solid cake material which normally would stick to the housing.

3,398,889
CONTROL SYSTEM FOR AIR CONDITIONERS AND THE LIKE
Billy J. Bohannan, Hot Springs, Ark., assignor to Borg-Warner Corporation, Chicago, Ill., a corporation of Illinois
Filed Jan. 24, 1966, Ser. No. 522,590
4 Claims. (Cl. 236—1)

A control system for an air conditioner, having a fan motor and a compressor motor, each controlled by a circuit responsive to temperature, so that air conditioner noise is held to a minimum, the fan motor being operated at a minimum speed below a first temperature, and then being proportionately varied between said first temperature and a second higher temperature, and the compres-

sor motor being turned "on" at said first temperature while temperature is increasing, and being turned "off"

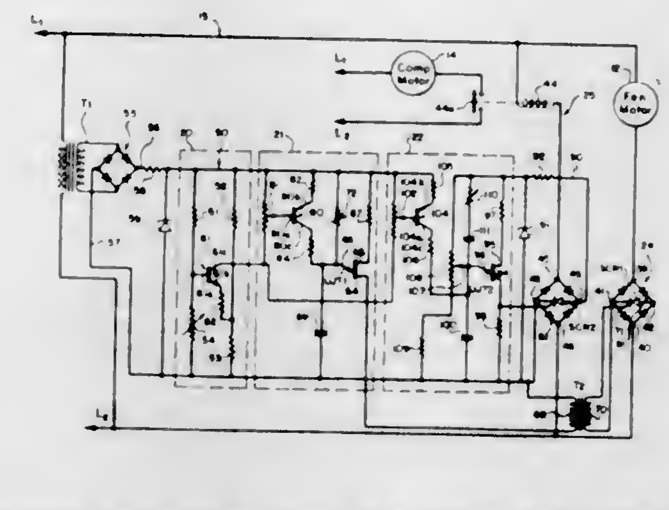

at a third temperature, lower than either of the other two temperatures, with temperature decrease.

3,398,890
FAIL-SAFE REGULATOR FOR GAS-OVEN BURNERS
Thomas P. Fleer, St. Louis, Mo., assignor to Aurora Corporation of Illinois, Chicago, Ill., a corporation of Illinois
Filed Oct. 3, 1966, Ser. No. 583,793
1 Claim. (Cl. 236—15)

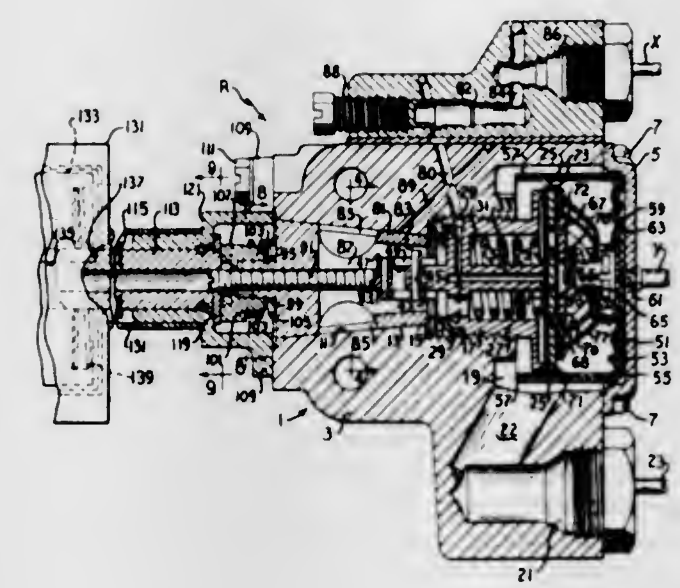

An improvement in a gas regulating system for ovens in which a burner is supplied with gas through a safety valve. Regulator means in a housing supplies gas to the safety valve. The burner is provided with a constantly burning pilot light and a cycling pilot light. The latter controls the operation of the safety valve through heating of a fluid-filled temperature-responsive system which connects them. The regulating means is under control of another fluid-filled temperature-responsive system heated by the burner. Said regulating means controls the operation of the cycling pilot. A by-pass extends around the said regulating means for converting the cycling pilot to a constant burning pilot. This by-pass is under control of a manually controlled valve which is operable in conjunction with the regulating means. The regulating means includes a double-seated member threaded into the housing for controlling flow of gas both to the cycling pilot and to the safety valve. A first ported valve member engages and disengages said seats. A second valve member has lost-motion with respect to the first valve member to engage and disengage it so as to cover and uncover its ports. The fluid-filled system responsive to the burner temperature is arranged with spring connections with both of said valves. These are arranged so that the first valve member initially engages the double seats, after which the second valve member engages the first valve member to cover its ports, the arrangement being such that if the safety valve fails all gas supply connections to the burner will be cut off at a temperature not much in excess of the normal temperature setting of the burner.

3,398,891
THERMOSTATIC BY-PASS CONTROL VALVE
Alexander Dewar Horne, Johnstone, Scotland, assignor to The Horne Engineering Company Limited, Johnstone, Scotland, a British company
Filed Sept. 6, 1966, Ser. No. 577,459
Claims priority, application Great Britain, Jan. 25, 1966, 3,400/66
5 Claims. (Cl. 236—18)

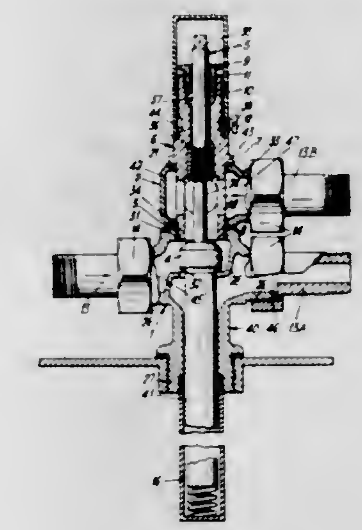

A thermostatic valve for controlling the flow of heating fluid to a heat exchanger associated with a vessel for liquid so as to maintain the temperature of the heated liquid at a predetermined value has a casing with a main portion for through flow of heating fluid and a branch portion for the diversionary flow of heating fluid. A housing opening laterally from the main casing encloses thermo-sensitive expansion means which includes an elongated thermal expansion device extending into the branch portion. A pair of opposed seatings are provided in the casing associated with the main portion and branch portion respectively and the expansion means carries a closure disc disposed between the seatings, the disc being urged into contact with the branch seating by spring means to close the passage to the branch portion. The casing is adapted to be attached to the vessel so that the housing projects into the vessel and the expansion device is responsive to the temperature of liquid therein. On heating of the liquid within the vessel to the desired temperature and consequent thermal expansion of the device, the device firstly comes into engagement with an abutment in the branch portion, and thereafter the closure disc is forced clear of the branch seating to cause diversionary flow of heating fluid.

3,398,892
ELECTROSTATIC COATING APPARATUS
Richard L. La Fave and Norbert M. Zupan, Indianapolis, Ind., assignors to Ransburg Electro-Coating Corp., Indianapolis, Ind., a corporation of Indiana
Filed Oct. 26, 1966, Ser. No. 589,749
9 Claims. (Cl. 239—15)

An atomizer for use in an electrostatic spray coating system comprises an elongated body having a flow-guid-

ing surface which receives liquid coating material from an elongated slot and guides it for flow as a film to a discharge edge from which it is electrostatically atomized. The slot is supplied from an elongated feed chamber con-

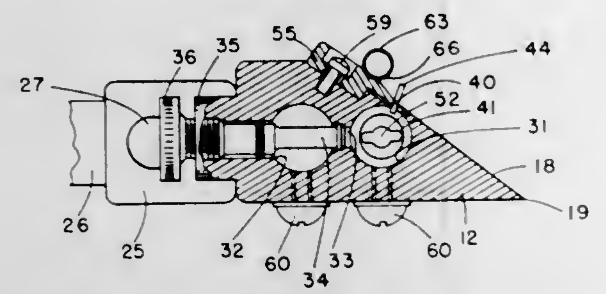

taining longitudinally adjustable closures which regulate the effective length of the slot. The atomizer may include means for preliminarily wetting the slot walls and flow-guiding surface with a solvent to promote the formation of the liquid material into a uniform film.

3,398,893
DEVICE FOR DISPENSING SPRAY FROM A MOVING VEHICLE
George L. Missimer, Los Angeles, and Ivan Rasovich, La Crescenta, Calif., assignors to Missimers Incorporated, Glendale, Calif., a corporation of California
Filed Jan. 24, 1966, Ser. No. 522,583
10 Claims. (Cl. 239—77)

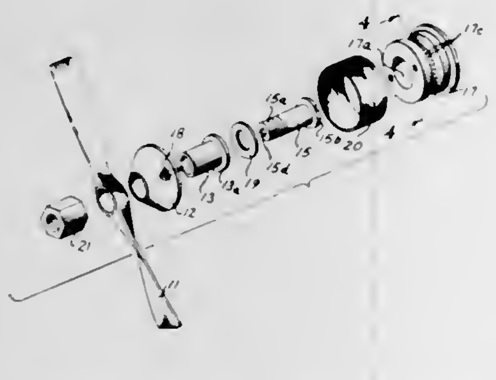

A spray dispenser having a sleeve bearing supporting rotating members including a propeller, a hollow chamber having a concave inner surface with radial orifices therethrough, and heat sink hub.

3,398,894
AUTOMATIC ADJUSTABLE SPRINKLER
Raymond D'Agaro, 5601 NE. 9th Ave., Fort Lauderdale, Fla. 33308
Filed Aug. 26, 1965, Ser. No. 482,777
20 Claims. (Cl. 239—97)

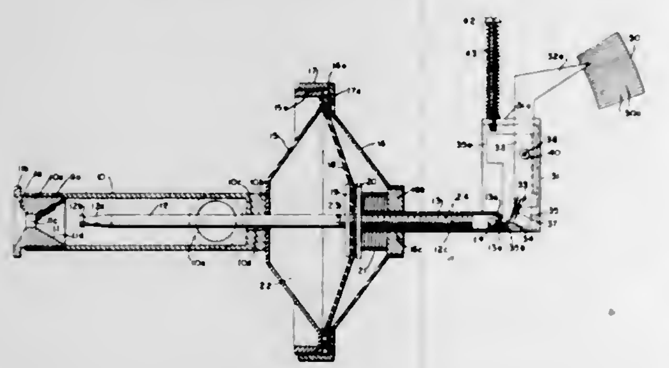

An automatic sprinkler including an inclined nozzle unit rotatably mounted on a base and supplied with water under pressure, said nozzle unit having a closed lower end and a nozzle head at its upper end, a valve stem cooperating with the nozzle head and extending through the closed end, the stem when shifted progressively varying the characteristics of the emitted water from a solid stream to a spray and to complete shut off, with cam means cooperating with the extended end of the stem for shifting same whereby a continuous pumping action takes place during the time that water under pressure is admitted to the nozzle unit causing a repetitious constantly varying spray cycle ranging from a solid stream, a spray of varying characteristics, and to complete shut-off for each setting of the cam.

3,398,895
COOLED FUEL INJECTION NOZZLE
Frank J. Claffey, East Hampton, Conn., assignor to American Bosch Arma Corporation, Springfield, Mass., a corporation of New York
Filed Mar. 30, 1966, Ser. No. 538,785
5 Claims. (Cl. 239—132.3)

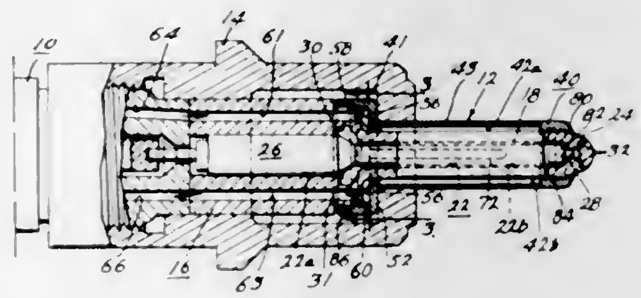

An improvement in a fuel injection nozzle for internal combustion engines which generally comprise a cylindrical nozzle body, an elongated nozzle tip projecting from one end of the nozzle body and a jacket including a cup portion in which the lower portion of the nozzle body is nested and a hollow sleeve depending from the cup portion circumscribing and coextensive with the nozzle tip. The present invention is directed to an improvement consisting in the nozzle tip being of uniform cross section for substantially its entire length and the sleeve portion being of cylindrical form and of a larger internal diameter than the nozzle tip to provide an annular space therebetween. The sleeve portion is of a deformable material so that it may be crimped to define a pair of elongated diametrically opposed, longitudinally extending, inwardly directed ribs defining inlet and outlet coolant passageways between the nozzle tip and sleeve. The ribs terminate at a point spaced upwardly from the free terminal end of the sleeve and nozzle tip to define an annular coolant chamber adjacent the nozzle tip. Means is provided to connect the cup to the nozzle body and the lower free end of the sleeve to the nozzle tip.

3,398,896
SUPERSONIC CONVERGENT-DIVERGENT JET EXHAUST NOZZLES
George R. Rabone, Cincinnati, Ohio, assignor, by mesne assignments, to the United States of America as represented by the Secretary of the Air Force
Filed Dec. 30, 1965, Ser. No. 517,543
5 Claims. (Cl. 239—265.41)

The invention comprises a jet engine exhaust nozzle of the convergent-divergent type, including a plurality of circumferentially-arranged inner wall members **28** and a plurality of circumferentially-arranged outer wall members **32** pivotally supported at their upstream ends and pivotally hinged together at their downstream ends for variation of the nozzle expansion ratio (A_9/A_8). Means are provided whereby the annular cavity **50** formed between the inner and outer wall members or flaps is closed off from high pressure secondary air which is instead injected along the inner secondary nozzle wall member as a film coolant. The cavity is maintained at the desired pressure by jet ejector pumps **52** operated by suitable means within the engine, e.g. compressor bleed. The

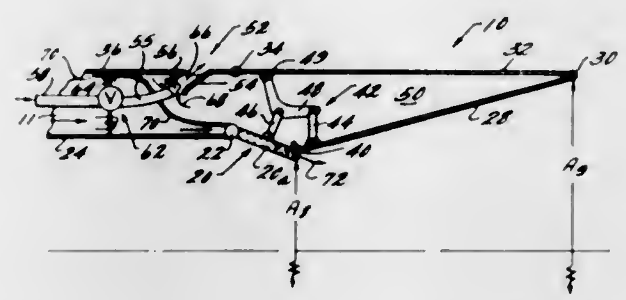

pumps may shut off when the nozzle is not required to stay in the closed or inner position. In this manner, the nozzle secondary or divergent portion will be essentially free floating or self-actuated and will move toward the position of optimum operating performance.

3,398,897
NEBULIZER
Nick N. Urbanowicz, 151 Albion St., Brantford, Ontario, Canada
Filed Sept. 26, 1966, Ser. No. 581,958
6 Claims. (Cl. 239—338)

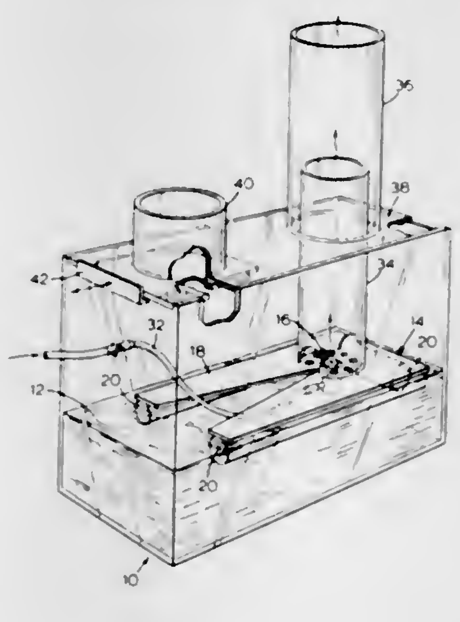

The invention described consists of a nebulizer operating on a principle of nebulization which amounts to passing a carrier gas upwardly through a small aperture in the top surface of a body member on which is formed a thin film of liquid to be nebulized. Nebulization is assisted through the provision of a baffle positioned above and spaced from the aperture to create additional turbulence in the carrier gas. In particular, the nebulizer provides an arrangement for feeding a liquid to be nebulized to the top surface of the body member which essentially consists of a float for carrying the body member within a body of the liquid to be nebulized and including adjustment means for varying the relative position of the body member in the float so that the top surface of the body member may be positioned relative to the top surface of the body of liquid for optimum nebulization.

ERRATUM

For Class 239—533 see:
Patent No. 3,398,936

3,398,898
FLAME SCARFING TORCH HEAD
Traugott Gutermann and Dieter Kimm, Frankfurt am Main, Germany, assignors to Messer Griesheim GmbH., Frankfurt am Main, Germany, a corporation of Germany
Filed Dec. 20, 1966, Ser. No. 603,300
Claims priority, application Germany, Dec. 22, 1965, M 67,749
12 Claims. (Cl. 239—549)

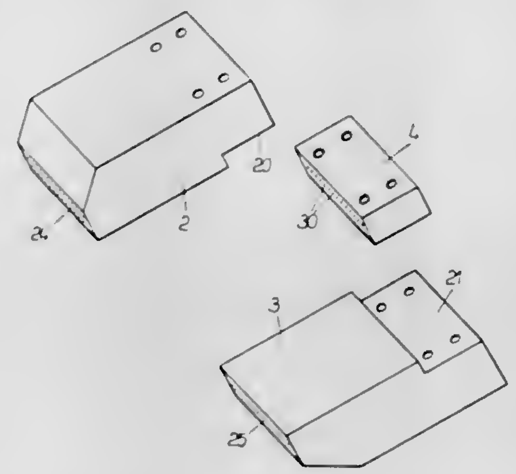

The torch head has a pair of lips provided with communicating recesses which house a spacer having a plurality of oxygen passages over the entire width of the head and so dimensioned as to form a gap between the lips.

3,398,899
NOZZLE APPLICATOR FOR DRY PROCESS ENAMELS
Ralph Fry, Warren, Pa., assignor to Ferro Corporation, Cleveland, Ohio, a corporation of Ohio
Filed June 23, 1966, Ser. No. 559,755
4 Claims. (Cl. 239—597)

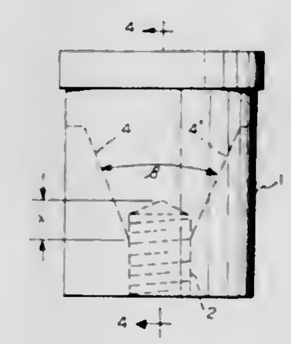

A nozzle for the pneumatic application of discrete particulate material to a predetermined surface area, and more particularly for the deposition of powdered, dry process porcelain enamel to a heated cast metal substrate.

3,398,900
HIGH SHEAR DISPERSION UNIT
Peter Guba, 483 Eastbrook Road, Ridgewood, N.J. 07450, and Charles Sweeney, 8504 Tallwood Road, Lutherville, Md. 21093
Filed Nov. 23, 1966, Ser. No. 596,611
10 Claims. (Cl. 241—67)

1. A dispersion unit comprising a hollow rotor and a hollow stator having conical cooperating surfaces, a tubular spindle coupled with the rotor, the rotor having a chamber with which the bore of said spindle communicates, a small diameter tube arranged in the bore of said spindle and having one end extending and opening into said chamber, means at the other end of said tube and the corresponding end of said spindle for introducing and discharging a temperature control medium with re-

spect to said chamber in controlling the temperature of material processed by said rotor, means coupled with said stator for adjusting the spacing between the cooperating surfaces of the rotor and stator, a jacket spaced from and enveloping said stator, means for sealing the jacket on flat ends of said stator, means for introducing and discharging a temperature control medium with respect to said jacket to further control the temperature of the material processed in said stator, means for driving said rotor, means passing through said jacket and coupled with said stator for delivery of a pressure fed blended mate-

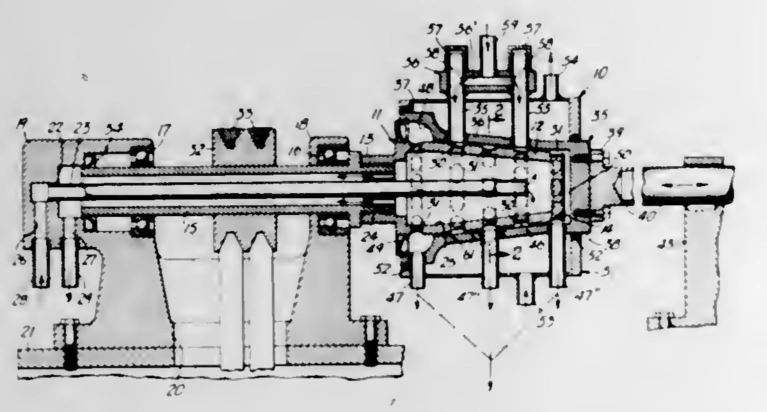

rial for shearing and grinding thereof by the rotor and stator in the rotation of said rotor, said rotor having circumferentially spaced shearing means on the surface thereof, alined with said last named means, for shearing said pressure delivered material, said rotor having restricted surfaces at sides of said shearing means, said rotor having longitudinally spaced discharge means for delivery of the sheared and ground product to product discharge tubes alined with said discharge means, and said last named tubes being coupled with said stator and said jacket.

3,398,901
DESTRUCTOR MILLING MECHANISM
James E. O'Connor, Los Angeles, and Richard G. Page, Inglewood, Calif., assignors to Document Disintegration, Inc., Gardena, Calif., a corporation of California
Filed Feb. 14, 1966, Ser. No. 527,137
7 Claims. (Cl. 241—154)

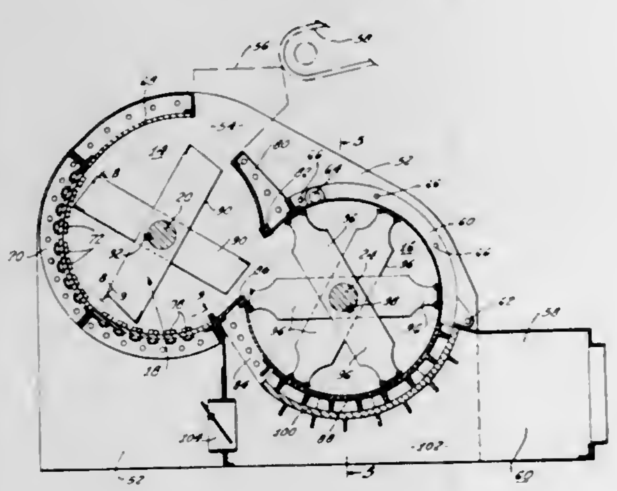

An improved destructor mechanism is described in the following specification for reducing documents, paper and similar fibrous materials to a fluffy illegible consistency. The mill to be described is a two-stage type, and is constructed to operate satisfactorily for destroying all types of documents from heavy bound books, for example, to papers and the like.

3,398,902
ELECTROMAGNETIC BALL MILL
Grigory Petrovich Khomeriki, ulitsa Barnova 109, kv. 7, Tbilisi, U.S.S.R.
Filed Dec. 2, 1965, Ser. No. 511,203
8 Claims. (Cl. 241—170)

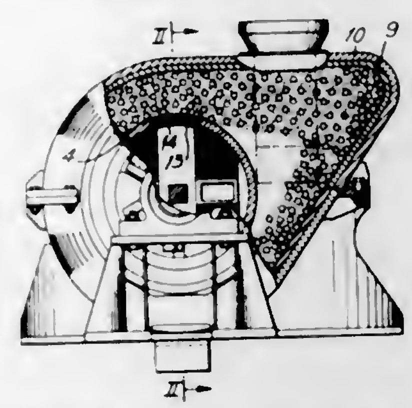

An electromagnetic ball mill having a vertical working chamber containing grinding metal bodies which undergo rotational movement in a vertical plane under the action of a rotating magnetic field in the chamber. The chamber widens upwardly in a horizontal direction in the vertical plane of rotational motion of the bodies.

3,398,903
BREAKER FOR METAL ITEMS
Walter V. Cornett, 2751 E. 11th St., Los Angeles, Calif. 90023
Filed Nov. 30, 1965, Ser. No. 510,487
19 Claims. (Cl. 241—185)

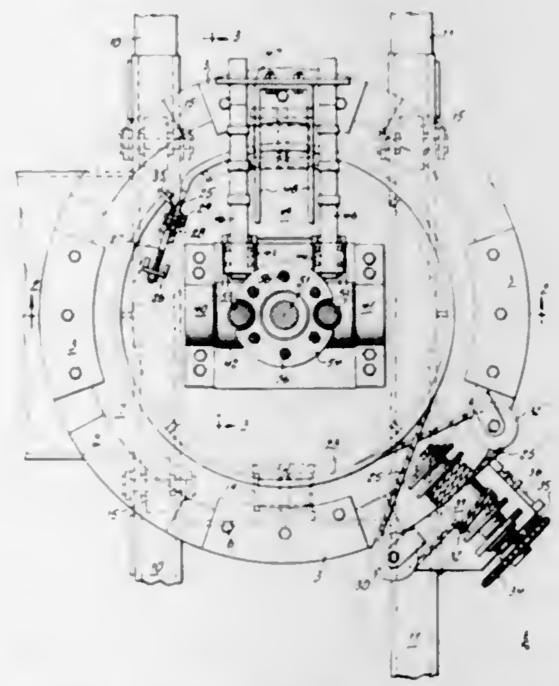

The present application is directed to machines for destroying obsolete or wrecked metal objects such as motor blocks of large and small size. Basically, there is provided a turntable on which a vertically reciprocating hammer support is mounted. The hammer mount passes through a horizontal trunnion which is movable to cause the hammer to move vertically or to tilt to various angles. The turntable assembly may be shifted laterally for further positioning of the hammer.

3,398,904
FILTER CARTRIDGE WINDING APPARATUS
Edward R. Adams and Jim L. Shepherd, Lebanon, Ind., assignors to Commercial Filters Corporation, Lebanon, Ind., a corporation of New York
Filed Aug. 5, 1966, Ser. No. 570,497
3 Claims. (Cl. 242—18)

Apparatus for uniform filter cartridge winding is provided which comprises spaced upright supports, a rotatable winding mandrel between two of said supports, an elongated pivotal counter balance guide bar spanning the supports, a winding guide on said guide bar, a helical continuous barrel cam having a track with a cross-over intersection guarded by a pivotal cam gate guided in slots in the track side walls, a rider slidably mounted on said guide bar and having one end connected to said guide

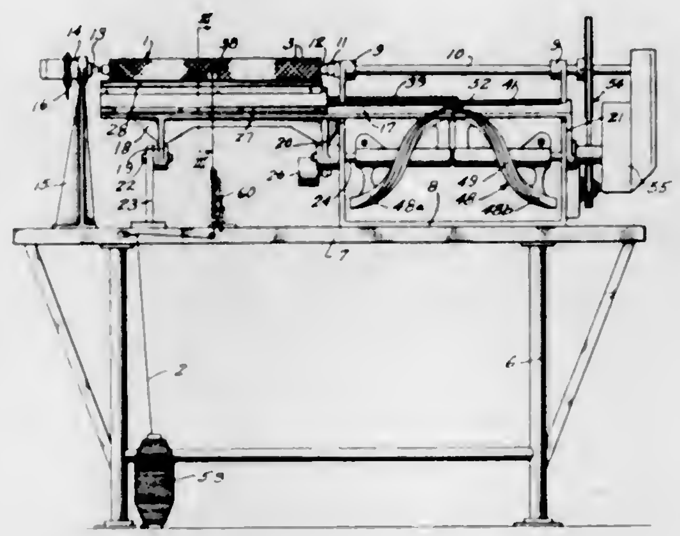

and the other end riding in the track so that as said barrel cam rotates the guide is reciprocally moved along the length of said winding mandrel whereby uniform winding of the cartridge is provided. Said barrel cam is fabricated of uniform sectional elements. The pivotal gate extends substantially the full depth of the track in the slots so that a continuous and smooth lateral support by the track of the rider is provided.

3,398,905
APPARATUS FOR MAKING FILTER TUBES
Edward R. Adams and Jim L. Shepherd, Lebanon, Ind., and James V. Piacitelli, Dedham, Mass., assignors to Commercial Filters Corporation, Lebanon, Ind., a corporation of New York
Filed July 18, 1966, Ser. No. 566,042
5 Claims. (Cl. 242—35.5)

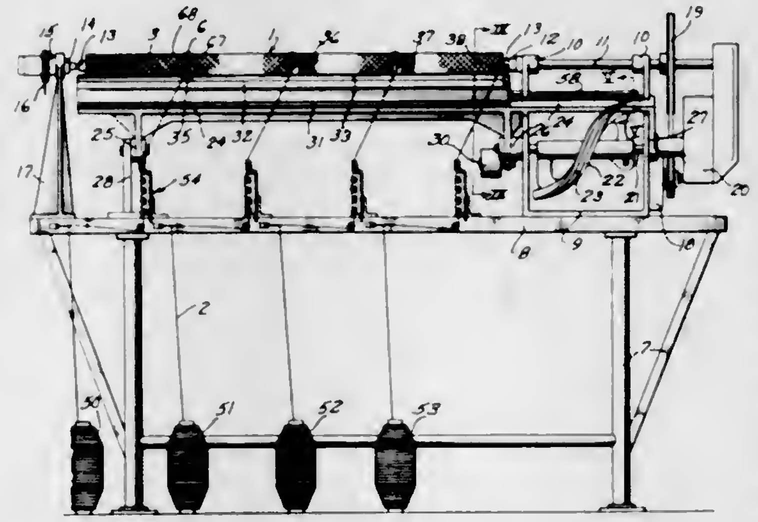

Apparatus for making filter tubes of helically wound roving, the apparatus embodying a rotary mandrel adjacent which a series of spaced roving guides are reciprocated in unison each supplying roving to a filter section wound on the mandrel, the spacing between guides being so adjustable as to permit interwinding at the adjacent ends of the adjacent sections to permanently unite the sections into a single elongated filter, and adjustable to maintain adjacent sections spaced apart to provide individual shorter filter tubes.

3,398,906
YARN-FINDING DEVICE
Charles C. Bell, Warwick, R.I., assignor to Leesona Corporation, Warwick, R.I., a corporation of Massachusetts
Filed Mar. 3, 1967, Ser. No. 620,480
8 Claims. (Cl. 242—35.6)

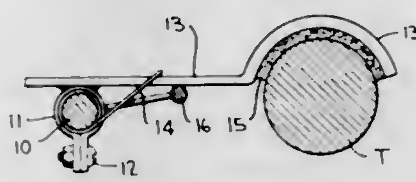

An apparatus for locating and withdrawing the free end of yarn from a yarn package is described. The apparatus utilizes a yarn adherent surface generally conformable to the surface of a yarn package. In operation, the yarn adherent surface is moved into engagement with the yarn package during relative movement of the package and adherent surface. The free end of yarn is located, seized and held by the yarn adherent surface and withdrawn from the package preparatory to a further operation.

3,398,907
APPARATUS FOR DRIVING FILAMENTARY MATERIAL COLLECTORS
Frederick G. Heumann, Toledo, Ohio, assignor to Owens-Corning Fiberglas Corporation, a corporation of Delaware
Filed July 1, 1966, Ser. No. 562,215
13 Claims. (Cl. 242—46.4)

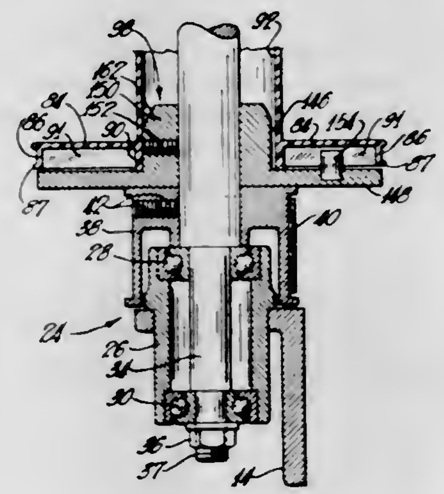

The disclosure embraces an adapter construction for use on a drive spindle of a bobbin winder or twister machine wherein the adapter means includes a body fashioned with flexible peripheral sections and resilient means biasing the sections into frictional engagement with the bobbin, the adapted means including a component carried by the spindle adjacent the base of a bobbin and engageable with ribs on the bobbin providing a positive drive connection for the bobbin.

3,398,908
HOLDER FOR ROLLED MATERIAL
George D. Thompson, 3660 Beethoven St., Los Angeles, Calif. 90066
Filed Dec. 9, 1966, Ser. No. 600,508
1 Claim. (Cl. 242—55.2)

A holder for rolled material having an arm and a knob portion. The roll of material is to have a cylindrical

opening therethrough and capable of being rotatably supported upon the arm. The knob necessitates the forc-

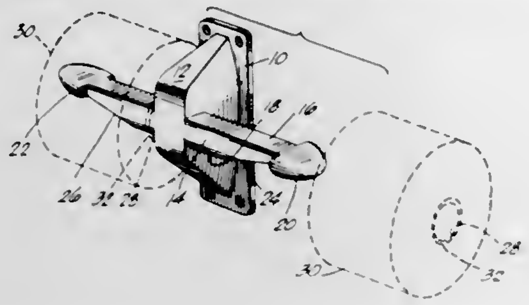

ing of the roll of material upon the arm, yet allows ease of removal of the material.

3,398,909
KINEMATOGRAPHIC APPARATUS
Angelo Jotzoff, Bubenreuth, Erlangen, Nurnberg, Germany, assignor to Paillard S.A., Vaud, Switzerland, a corporation of Switzerland
Filed Aug. 9, 1965, Ser. No. 478,163
Claims priority, application Switzerland, Oct. 13, 1964, 13,249/64
3 Claims. (Cl. 242—55.11)

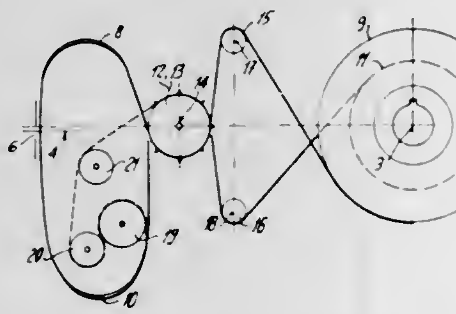

A kinematographic apparatus wherein a feed spool and a take up spool are arranged side by side on a common axis and film is transferred from the feed spool at an acute angle past a film exposure gate to the take up spool. The planes of the moving film form two free, relatively short loops of substantially helicoidal shape and eliminate the necessity of auxiliary guiding and feeding means for the film.

3,398,910
TAPE CUSHIONING APPARATUS FOR TAPE TRANSPORTS
Ralph Herman, Cherry Hill, and Raymond W. Raynor, Robbinsville, N.J., assignors to Radio Corporation of America, a corporation of Delaware
Filed July 1, 1966, Ser. No. 562,398
8 Claims. (Cl. 242—55.12)

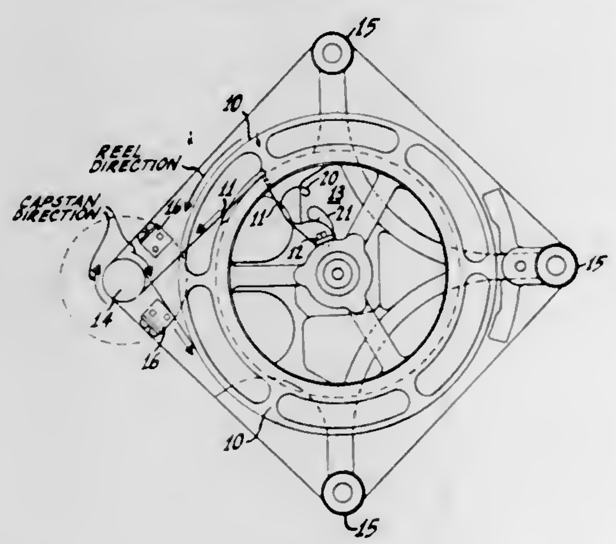

There is disclosed an end of tape travel cushioning apparatus. A flexible member is adapted at one end for mounting to a tape reel, the other end having first and second hook-like projections. The first projection is shaped so that it deflects the tape when the transport is running. If the tape runs past a normal stop position the tape exerts a force on the first projection which in turn exerts a force on the second projection, which in turn exerts a torque on the tape reel, counter to the direction of reel motion.

3,398,911
MOVING WEB SPLICING APPARATUS
Raymond Poupin, Fleury-les-Aubrais, France, assignor to Service d'Exploitation Industrielle des Tabacs et des Allumettes, Paris, France, a French public establishment
Filed Apr. 11, 1966, Ser. No. 541,828
Claims priority, application France, Apr. 9, 1965, 12,645
9 Claims. (Cl. 242—58.4)

A device for splicing the end of the web of an expiring roll to the starting end of the web of a new roll while the webs are moving. Two pulleys for holding the starting end of the new roll and a pivoting pressure roller between the pulleys, a coupling on the pulleys for driving them so that they serve also for setting the new web in motion while the expiring web is running, and further guiding the moving web.

3,398,912
FILM STRIP CARTRIDGE
John H. Weggeland, Los Angeles, Calif. (P.O. Box 204, Lehigh Acres, Fla. 33936)
Filed May 3, 1965, Ser. No. 452,942
5 Claims. (Cl. 242—71.2)

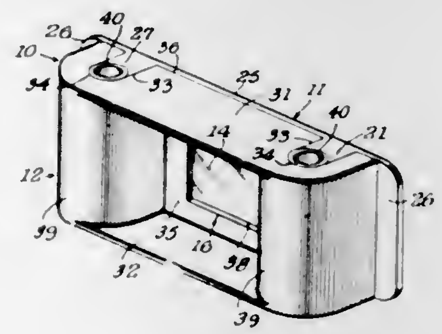

A cartridge comprising an elongated rectangular housing formed of two interfitting parts having end chambers to house film spools and connected by a portion with a film passage and a light aperture through the passage. The film spools have ends rotationally engaged in the chambers, at least one said end comprising a drive-connecting portion for rotating the spools, selectively. Friction drag means in each chamber engage the spools so as to retain a taut condition of the film wound on the spools as it extends through the film passage. Said cartridge being adapted to be placed in a projector having means to engage and rotate the spools and project the portions of the film exposed by said aperture.

3,398,913
VACUUM CONTROLLED JET TRANSPORT APPARATUS FOR MAGNETIC TAPE
Anthony W. Orlando, Highland, N.Y., assignor to International Business Machines Corporation, Armonk, N.Y., a corporation of New York
Filed July 15, 1966, Ser. No. 565,549
4 Claims. (Cl. 242—71.8)

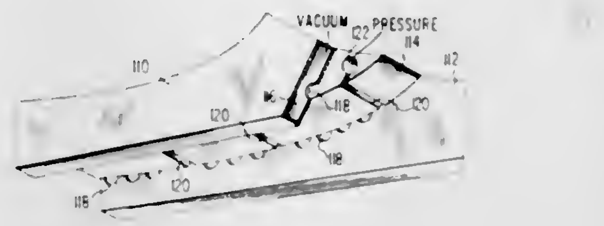

A tape transport device comprising a U-shaped channel member having a plurality of angled slots in the bottom thereof for supplying air jets and vacuum ports disposed in the sides of said channel adjacent the bottom thereof for drawing off the excess air to eliminate tape flutter.

3,398,914
TENSION-RESPONSIVE CONTROL FOR STRIP MATERIAL REELING
Patrick J. Cunningham, Fullerton, Calif., assignor to Consolidated Electrodynamics Corporation, Pasadena, Calif., a corporation of California
Continuation-in-part of application Ser. No. 511,463, Dec. 3, 1965. This application Jan. 6, 1967, Ser. No. 621,375
20 Claims. (Cl. 242—75.43)

A strip tension control mechanism for a strip material reeling device in which a belt driven pulley is connected to a reel for strip material, strip material from the reel passing a tension sensing roller biased into a selected position adjacent the reel when tension in the strip has a desired value. The roller is coupled to a belt idler roller so that when the strip tension at the sensing roller is greater than the desired tension, the idler roller is moved to slack the belt on the reel drive pulley. Where the roll is a supply reel from which strip material is withdrawn at a constant rate, a brake is associated with the pulley and is coupled to the sensing roller so that when the strip tension at the sensing roller is less than the desired tension, the brake is engaged with the pulley.

3,398,915
YARN COIL CARRIER
Claus Dittrich, In der Lach 45, Bad Homburg vor der Hohe, Germany
Filed Aug. 24, 1966, Ser. No. 574,691
Claims priority, application Germany, Aug. 28, 1965, D 48,077
2 Claims. (Cl. 242—118.7)

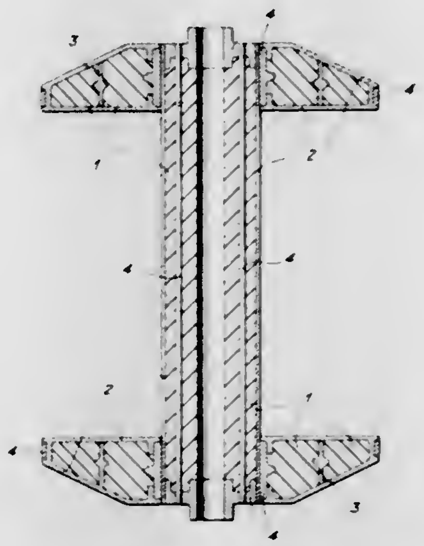

A yarn coil carrier including a yarn beam having flanges at each end thereof, each of the beam and flanges having a core element of a lightweight plastic material removable out of the beam and flanges by heat or solvent, the core elements being reinforced by tie rods and elements embedded therein.

3,398,916
DEVICE FOR CORRECTING THE TRAJECTORY OF PROJECTILES AND THE SO-EQUIPPED PROJECTILES
Frederic Edouard Antoine Van Vyve, Vivegnis, Belgium, assignor to Fabrique Nationale d'Armes de Guerre Societe Anonyme, Herstal-lez-Liege, Belgium
Filed June 19, 1967, Ser. No. 646,899
Claims priority, application Belgium, July 4, 1966, 683,586
2 Claims. (Cl. 244—3.11)

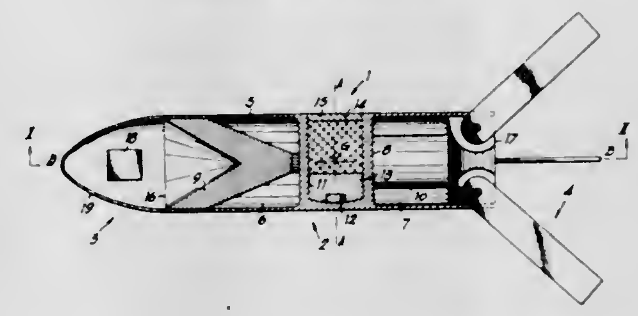

A trajectory correcting device including an auxiliary projectile for a projectile rotating about its longitudinal axis along the trajectory thereof and comprising a remotely controllable detecting device.

3,398,917
DISCHARGING DEVICE FOR LOADS ON A PALLET IN AN AIRPLANE
Volkmar Grabe, Bremen, Germany, assignor to Vereinigte Flugtechnische Werke Gesellschaft mit beschrankter Haftung fruher Weser Flugzeugbau Focke-Wulf Heinkel-Flugzeugbau, Bremen, Germany
Filed Feb. 13, 1967, Ser. No. 615,557
Claims priority, application Germany, Feb. 11, 1966, V 30,372
16 Claims. (Cl. 244—137)

Invention concerns device for controlling the discharge

load carrying pallets from an airplane in which rails support the pallets and latches held the pallets in place on

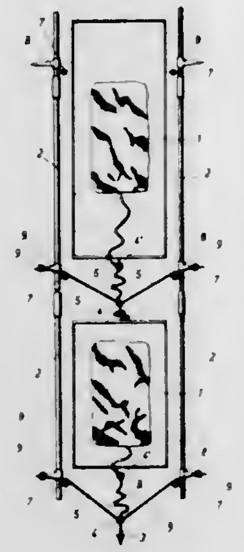

the rails with a shaft connected to the latches to operate them into release position and means to actuate the shaft.

3,398,918
OPTICAL SYSTEM FOR GUIDING A PROJECTILE
Pierre Girault, Paris, France, assignor to CSF—Compagnie Generale de Telegraphie Sans Fil, a corporation of France
Filed Dec. 5, 1966, Ser. No. 599,139
Claims priority, application France, Dec. 6, 1965, 41,068
11 Claims. (Cl. 244—3.13)

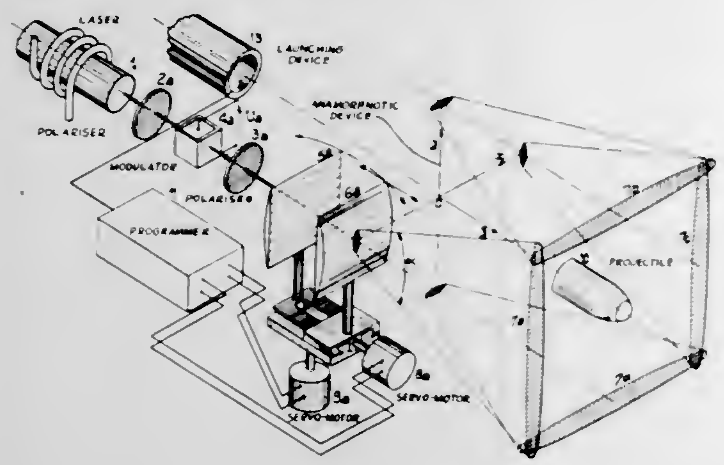

An optical beam-rider guidance system for guiding a missile from a launching base to a target. The launching base comprises at least an optical maser or laser source and optical means for radiating in the vicinity of a sighting axis a plurality of fan shaped light beams which are intercepted by photoelectric means carried by the missile for actuating the rudders of the latter in such a manner as to follow automatically the sighting axis.

3,398,919
NURSING BOTTLE HOLDING DEVICE
Gerald Tokar, 275 McMurray Road, Bridgeville, Pa. 15017
Filed Aug. 19, 1966, Ser. No. 573,520
9 Claims. (Cl. 248—103)

A nursing bottle holding device for a crib and the like is provided that has a telescopic vertical column having attachment means at its opposite ends for engaging vertically-spaced-apart upper and lower horizontal rails or bars of a side rail assembly of an infant's crib. The column member is variable in length for adjustment in accordance with the distance between horizontal crib rails. A horizontal swingable support arm is adapted to extend laterally-horizontally-outwardly from the column and to be mounted thereon by a base which includes a setscrew carrying collar and a sleeve on the collar that is bifurcated or that has a pair of arms that, in combination with a clevis pin or thumbscrew, provide position-clamping horizontally-swingable means for attaching an inner end of

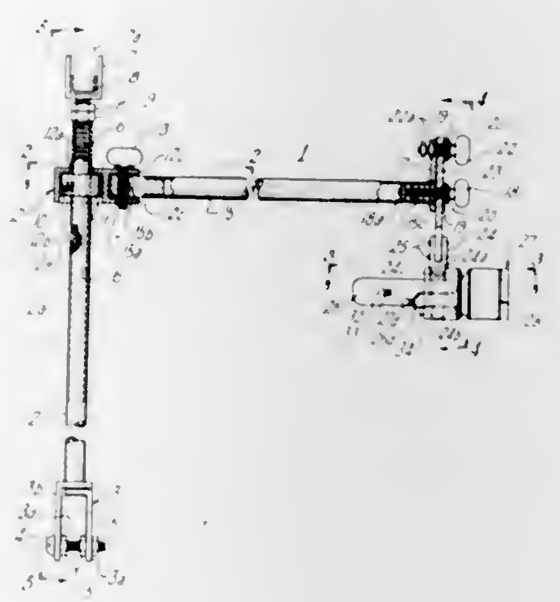

the support arm to the base. The other end of the support arm carries a bottle clamping means in a downwardly-spaced and horizontally extending relation by means of a clamp mounting having a shaft portion for horizontally-pivotally or swingably carrying the clamping means. The clamp mounting has an upper plate which is centrally-pivoted on the outer end of the support arm and is slotted and adapted to receive a thumbscrew for securing or clamping it in adjusted, different vertical, angular positions with respect to and about the support arm.

3,398,920
HINGE CLAMP
Joe R. Haynes, Chamblee, Ga., assignor to Fisher-Haynes Corporation, a corporation of New Jersey
Filed Dec. 14, 1966, Ser. No. 601,685
1 Claim. (Cl. 248—226)

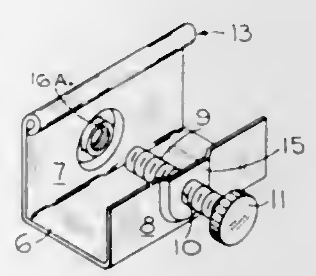

A hinge clamp constructed according to the invention is for the purpose of forming a hinged connection between a wire guard for a fluorescent lamp and a portion of the lamp itself and includes a base plate to the side edges of which a pair of apertured clamping plates are affixed in spaced parallel relation. A swivel element formed on one of the clamping plates cooperates with a portion of the wire guard to form a hinge. A gripping element is threadedly mounted in an aperture formed in one of the clamping plates. The area of each clamping plate

immediately adjacent its aperture is embossed on the exterior surface thereof and an internally projecting throat portion is formed in coincidental relationship to each aperture and is internally threaded so that the gripping element may be mounted in either clamping plate and arranged with one end thereof spaced from the other clamping plate to form a pair of vise elements.

3,398,921
COMPOSITE MOLDING
Oscar Braun, Esslingen (Neckar), Germany, assignor to Pebra G.m.b.H., Paul Braun, Esslingen (Neckar), Germany
Filed Nov. 1, 1966, Ser. No. 591,354
Claims priority, application Germany, Nov. 5, 1965, P 26,213
12 Claims. (Cl. 248—345.1)

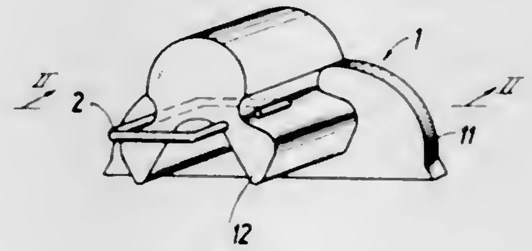

A composite molding strip comprises a rigid elongated hollow rail having a face which is provided with a longitudinally extending slot. An elongated liner has a base received in the slot, a ridge of resilient material which projects beyond the base, and an end portion. An end cap is located adjacent to one end of the rail and includes a projection which extends to this one end and engages the end portion of the liner. A staple comprises arms which respectively pierce the projection and the base for connecting the former with the latter.

3,398,922
CONTAINER TIE DOWN DEVICE
John J. Martin, Warminster, Pa., assignor to Strick Corporation, Fairless Hills, Pa., a corporation of Pennsylvania
Filed Feb. 27, 1967, Ser. No. 618,767
6 Claims. (Cl. 248—361)

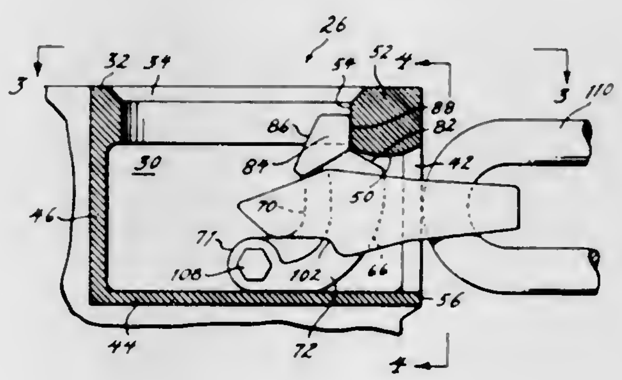

For use with a cargo container incorporating hollow corner members with at least one slotted wall, a device adapted to be connected to a lashing cable or chain which is insertable into the corner member through the slot and which is readily turned to a positon to effect engagement of a portion of the device with part of the slotted wall to retain the device therein.

3,398,923
SHAPED BODIES WITH HIGH TEMPERATURE STRENGTH AND CORROSION RESISTANCE AGAINST MOLTEN METALS PARTICULARLY MOLTEN IRON AND STEELS
Egon Pipitz, Gerolf Strohmeier, and Karl Sedlatschek, Reutte, Tyrol, Austria, assignors to Schwarzkopf Development Company, New York, N.Y., a corporation of New York
Filed Nov. 19, 1965, Ser. No. 508,690
Claims priority, application Austria, Nov. 20, 1964, A 9,849/64; Dec. 7, 1964, A 10,332/64; Dec. 10, 1964, A 10,493/64
12 Claims. (Cl. 249—134)

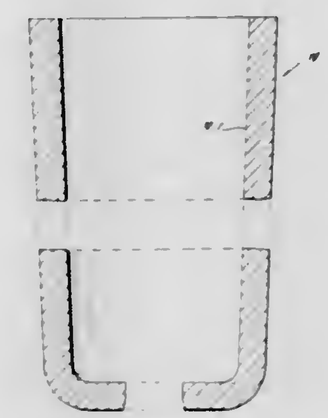

7. A hollow permanent mold for casting molten metal and forming shaped metal bodies, which mold has high resistance to thermal shock and consists of a ceramic phase and a metal phase,

said ceramic phase constituting 80 to 15 vol. percent of said body and consisting of a ceramic selected from the group consisting of zirconium oxide containing 4 to 10 wt. percent calcium oxide, zirconium oxide containing 4 to 10 wt. percent magnesium oxide, such zirconium oxide containing up to 50 wt. percent thorium oxide, such zirconium oxide containing up to 50 wt. percent titanium oxide and combinations of two and more of said ceramics,

said metallic phase constituting 20 to 85 vol. percent of and being the balance of said body and consisting of metal selected from the group consisting of molybdenum, tungsten, molybdenum containing up to 50 wt. percent chromium, tungsten containing up to 50 wt. percent chromium, a tungsten-molybdenum alloy containing up to 50 wt. percent chromium and mixtures of two and more of said metals,

said mold consisting of a homogeneous mixture of fine powder particles of said specified ceramic and metal phase ingredients, which particles have been compacted and have been sintered at temperatures of at least 1800° C. into a body having a high density near the theoretical density of its composition and resisting thermal variations and corrosion by molten metal at high temperatures of at least about 1400° C. in contact therewith.

3,398,924
HYDRAULIC VALVE OPERATING DEVICE
Francis M. Lathrop II, Houston, Tex., assignor, by mesne assignments, to M & J Valve Company, Houston, Tex., a corporation of Delaware
Filed Apr. 26, 1966, Ser. No. 545,415
1 Claim. (Cl. 251—31)

A hydraulic operator for valves which can be mounted upon the valve body and attached to the valve operating rod. The rod extends through a fixed inner tube and its

open end is secured to a concentric inner cylindrical member that is connected to a hydraulic piston operating with-

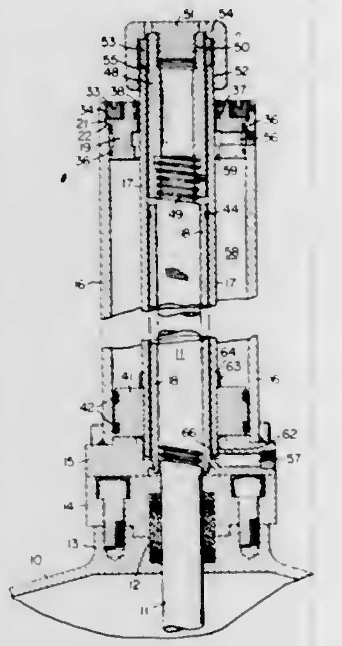

in an outer cylinder. The upper end of the tube is sealed with respect to the inner cylindrical member.

3,398,925
COMPOSITE SEAT BALL VALVE
Domer Scaramucci, Oklahoma City, Okla., assignor to Balon Corporation, Oklahoma City, Okla., a corporation of Oklahoma
Continuation-in-part of application Ser. No. 319,218, Oct. 28, 1963. This application Jan. 10, 1966, Ser. No. 519,500
31 Claims. (Cl. 251—148)

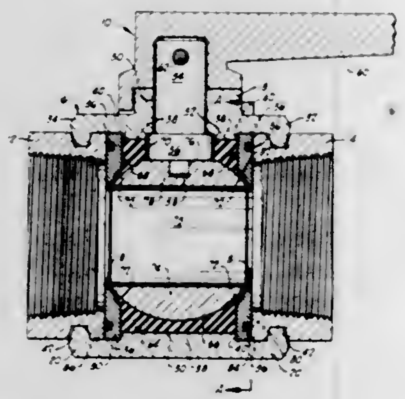

1. A ball valve assembly comprising:
a valve body having a first end and a second end and having a bore extending between said ends, said valve body further having a valve stem opening between the ends of the valve body communicating with said bore and extending substantially normal thereto;
a one-piece, unitary resilient sealing member positioned in said bore between the ends of said body and having a pair of spaced, parallel, substantially planar end faces and defining a frusto-spherical cavity open at the center of each of said planar end faces, said sealing member further having a valve stem opening therein aligned with the valve stem opening in said valve body and communicating with the frusto-spherical cavity;
a valve ball in said frusto-spherical cavity in sealing engagement with said sealing member and having a flow passageway extending diametrically through the valve ball and communicating with the bore through said valve body, said valve ball having first and second ends projecting out of the frusto-spherical cavity in the sealing member at the openings to said frusto-spherical cavity in the planar end faces of said sealing member, and having means between the first and second ends of the valve ball and on the outer peripheral surface of the valve ball for engaging a valve stem;
a pair of rigid reinforcing members bearing against the planar end faces of the resilient sealing member and surrounding the openings of the fluid passageway through said valve ball, said pair of reinforcing members having a larger radial dimension than the planar end faces of the sealing member and thus each having a first portion extending radially inwardly past said sealing member toward one of the projecting ends of said ball, and a second portion extending radially outwardly past said sealing member toward said valve body;
rigid spacer means in said valve body contacting the outer periphery of said sealing member and said pair of rigid reinforcing members for spacing said rigid reinforcing members from each other, and limiting the compression of said sealing member when said reinforcing members are forced toward each other by connection of the valve body between two pipe sections, said rigid spacer means having an opening therein aligned with said stem opening; and
a valve ball operating stem extending through said stem openings and through the opening in said rigid spacer means and in sealing engagement with said sealing member.

3,398,926
VALVES AND SEALS THEREFOR
Domer Scaramucci, Oklahoma City, Okla., assignor to Balon Corporation, Oklahoma City, Okla., a corporation of Oklahoma
Filed Feb. 1, 1965, Ser. No. 429,287
14 Claims. (Cl. 251—172)

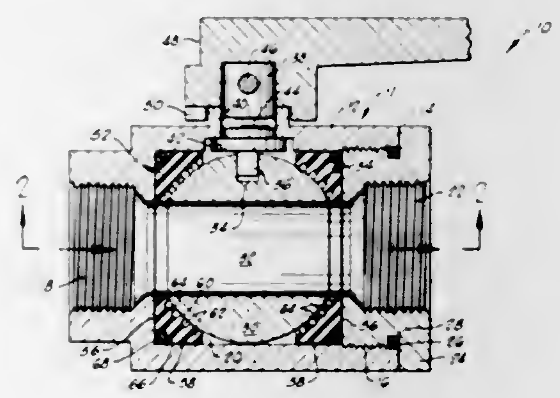

A valve containing annular, resilient seals around the inlet and outlet providing seals between the valve member and body, wherein the face of each seal engaging the valve member has a plurality of annular grooves therein providing a plurality of pockets for receiving foreign matter scraped from the valve member and providing a plurality of sealing lands engaging the valve member.

3,398,927
AUTOMATIC FILLING VALVE FOR POULTRY WATERING TROUGHS AND THE LIKE
Hans Rüter, Breitendyk 109, Krefeld, Germany
Filed Dec. 18, 1964, Ser. No. 419,335
Claims priority, application Germany, Dec. 20, 1963, R 36,850
5 Claims. (Cl. 251—228)

A valve housing is provided with a tiltable disc valve normally held in closed position by a coil spring. The valve stem has a bead at its free end. A hollow piston plunger has an inwardly extending cam. The plunger is actuated by a spiral spring when the water level in the

container becomes low. The plunger and the cam, thereby move into engagement with the bead on the valve

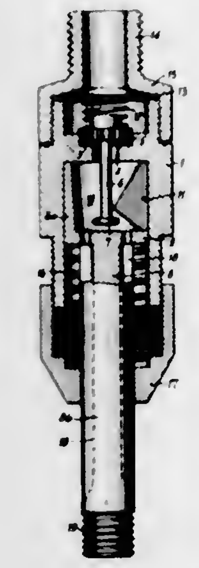

stem and tilt the valve to an open position, thus permitting water to flow through the valve into the container.

3,398,928
VALVES
John V. Fredd, Dallas, Tex., assignor to Otis Engineering Corporation, Dallas, Tex., a corporation of Delaware
Continuation-in-part of application Ser. No. 499,478, Oct. 21, 1965. This application Mar. 11, 1966, Ser. No. 533,667
16 Claims. (Cl. 251—251)

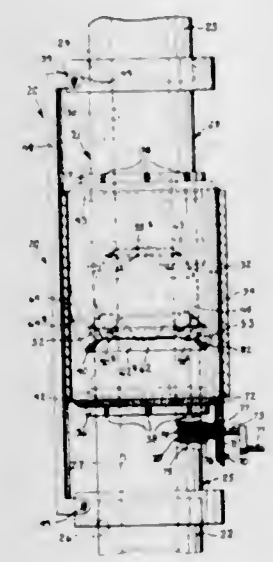

1. A valve including: a pair of longitudinally aligned tubular seat members having flow passages therethrough and facing annular seat surfaces; a ball between said seat members and engageable with said seat surfaces, said ball having an axial passage therethrough; and operator means for moving said ball between an open position wherein said axial passage is in alignment and communication with said flow passages and a closed position wherein said axial passage is out of alignment and out of communication with said flow passages, the longitudinal axis of said axial passage when said ball is in one of said closed and open positions being displaced substantially 90 degrees from its position when said ball is in the other of said closed and open positions, said operator means including means rotatable about the longitudinal axis of said seat members for rotating said ball about more than one central axis thereof during its movement by said operator means between said open and closed positions.

3,398,929
SHAFT-JOURNALING ASSEMBLY FOR ROTARY MACHINES
Bernard Schreiber and Hubert Redemann, Cologne-Merheim, Germany, assignors to Linde Aktiengesellschaft, Wiesbaden, Germany, a corporation of Germany
Filed Jan. 28, 1966, Ser. No. 524,965
9 Claims. (Cl. 253—39)

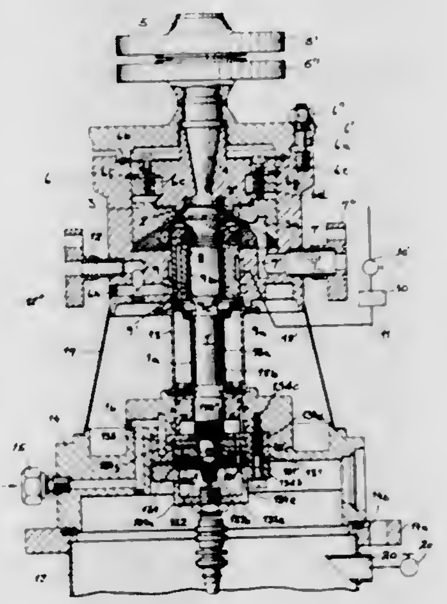

An expansion turbine with a vertical shaft carrying at its top a turbine rotor within an expansion chamber so that the upper part of the shaft is cooled by the expanding gas with reference to the lower part; the shaft is journaled at its cooler upper part in a gas bearing just below the expansion chamber and at its warmer lower part in an oil bearing whose frictional drag can be adjusted. The two bearings are bridged by a thermally insulating shell within which a stationary sleeve surrounds the shaft to define therewith a narrow annular space for the passage of some of the gas from the expansion chamber toward the oil bearing whereby intrusion of lubricating liquid into the expansion chamber is prevented.

3,398,930
ROTOR AND ITS VARIOUS APPLICATIONS IN PARTICULAR TO FLUID METERS
Jean Faure-Herman, 126 Quai Louis Bleriot, Paris, France
Filed Feb. 10, 1966, Ser. No. 526,446
Claims priority, application France, Feb. 12, 1965, 5,414
7 Claims. (Cl. 253—39)

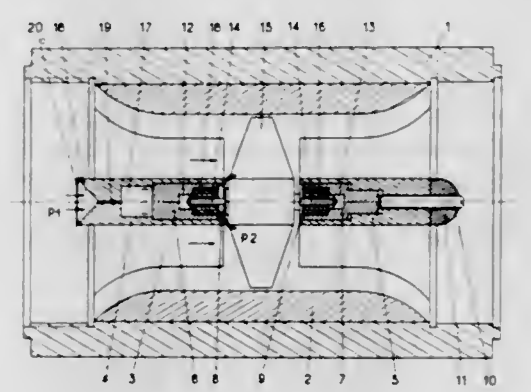

A fluid flow meter has a passageway for the flow of fluid and a rotor having opposite pivots and rotatably supported in the passageway by two cup bearings engaged by the pivots of the rotor. The downstream bearing is sta-

tionary although preferably adjustable, while the upstream bearing is provided by a piston movable axially in a cylinder to which fluid pressure is supplied through a restricted passageway as a function of the rate of flow of fluid through the passageway.

3,398,931
GLASS SEAL FOR A TURBINE
Donald G. Miller, Indianapolis, Ind., assignor to General Motors Corporation, Detroit, Mich., a corporation of Delaware
Filed Sept. 9, 1966, Ser. No. 578,285
9 Claims. (Cl. 253—39)

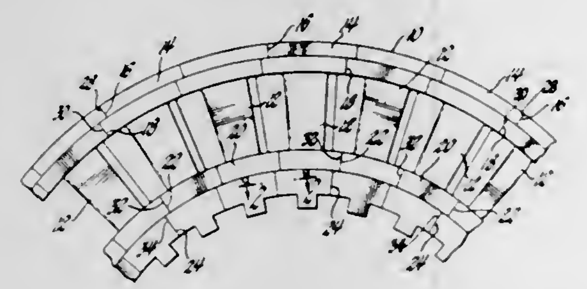

1. A glass seal adapted to reduce gas leakage between abutting metal parts in a gas turbine at operating temperatures comprising a glass mass having a solftening temperature substantially the same as the temperature of the abutting metal parts under gas turbine operating conditions, said glass mass softening sufficiently at these temperatures to form a viscous glass mass completely sealing the space between said abutting metal parts.

3,398,932
OSCILLATION DAMPING DEVICE
Paul Koeller, Dorval, Quebec, and Douglas W. Eggins, Scarborough, Ontario, Canada, assignors to Dominion Engineering Works, Limited, Lachine, Quebec, Canada, a corporation of Canada
Filed July 14, 1967, Ser. No. 653,439
8 Claims. (Cl. 253—117)

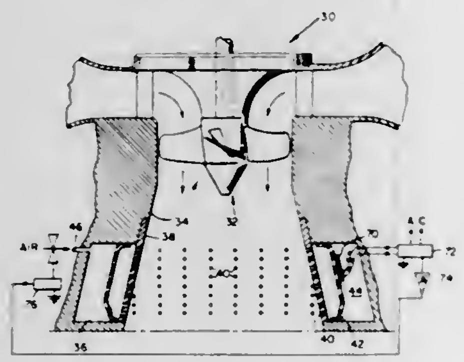

For controlling the noise and vibration in a turbo hydraulic machine such as a turbine an oscillation chamber is provided adjacent the machine to damp load and pressure oscillations of the working liquid, particularly when working at less than peak efficiency.

3,398,933
ADJUSTABLE PEDESTAL FOR ELEVATED FLOORING
Victor G. Haroldson, 30 Notchpark Road, Little Falls, N.J. 07424
Filed June 29, 1966, Ser. No. 561,583
2 Claims. (Cl. 254—98)

An adjustable pedestal for elevated flooring including a threaded rod, a tubular section for the reception of the rod locked at all times against relative turning of the rod with respect to the tubular section; and a nut threaded on the rod, the nut and the free end of the tubular section

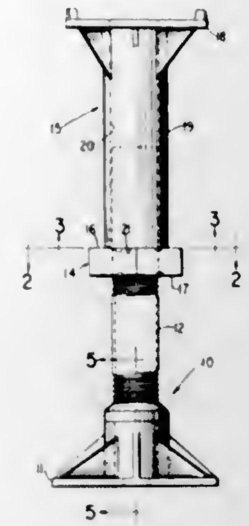

having cooperating recess and propitious means for preventing turning of the nut solely by the weight of the flooring imposed on the nut.

3,398,934
CARGO WINCH SYSTEM
Thomas Lancashire, West Chester, and Dennis Cunliffe, Swarthmore, Pa., assignors to The Boeing Company, Seattle, Wash., a corporation of Delaware
Filed June 20, 1966, Ser. No. 558,811
12 Claims. (Cl. 258—1.4)

A vertical replenishment system wherein a constant tension winch is mounted above a constant rate winch and a cargo is secured to and between the winches. The winches are rotated in contra-directions so that the constant tension winch applies a constant tension to the cargo while the downward movement of the cargo under the influence of the constant rate winch causes the constant tension winch to slip.

3,398,935
MIXING MEANS
Donald V. Livesey, Irondequoit, and Kenneth A. Snow, Greece, N.Y., assignors to Bausch & Lomb Incorporated, Rochester, N.Y., a corporation of New York
Filed Mar. 25, 1964, Ser. No. 354,686
3 Claims. (Cl. 259—18)

1. Apparatus for mixing a sample containing at least one low viscosity liquid material comprising in combination:

open top container means for holding a sample to be mixed;

conduit means for introducing separate sample constituents to be mixed into the container means;

a mixing tube connected to a source of mixing gas, said mixing tube including helical passage means for the mixing gas;

means for positioning the mixing tube vertically with respect to the sample; and

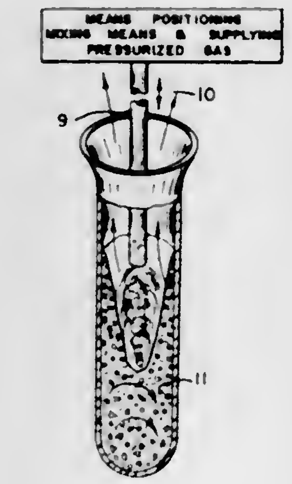

means for supplying pressurized mixing gas and flowing mixing gas from the helical passage means onto the sample surface in a vortex flow pattern to induce mixing of the sample constituents.

3,398,936
FUEL INJECTION PINTLE
James K. Delano, Newfoundland, N.J., assignor to Curtiss-Wright Corporation, a corporation of Delaware
Filed Aug. 2, 1966, Ser. No. 569,677
1 Claim. (Cl. 239—533)

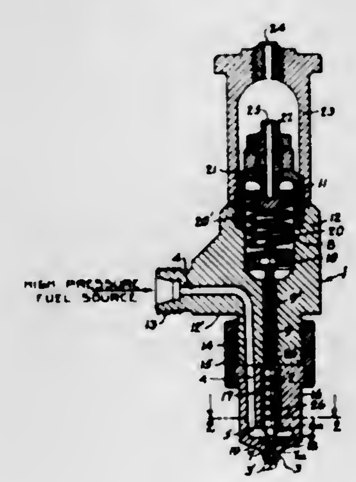

A reciprocating fuel injection pintle disposed within a guid bore, the surface of the pintle having recesses therein for entrapping fuel to minimize chattering and prevent seizing.

3,398,937
CARBURETOR
Donald D. Stoltman, Henrietta, N.Y., assignor to General Motors Corporation, Detroit, Mich., a corporation of Delaware
Continuation-in-part of application Ser. No. 464,806, June 17, 1965, now Patent No. 3,279,767. Division of application Ser. No. 504,961, Oct. 24, 1965. This application July 8, 1966, Ser. No. 563,735
5 Claims. (Cl. 261—23)

A four-barrel, multiple-stage carburetor has a pair of small plain tube primary mixture conduits transversely spaced on opposite sides of a small centrally located fuel

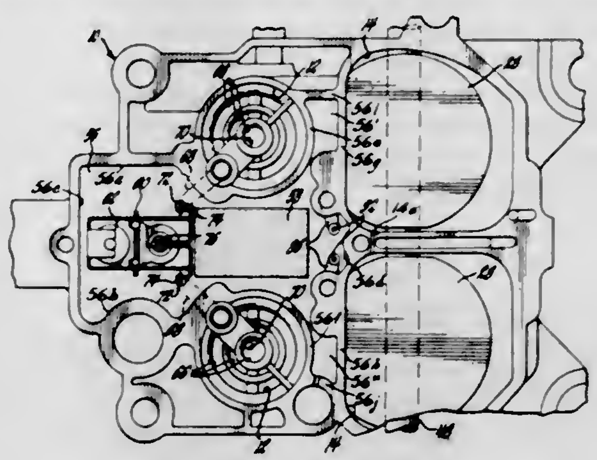

bowl and a pair of large air valve secondary mixture conduits transversely spaced across the rear of the fuel bowl.

3,398,938
CARBURETOR AND INLET MANIFOLDS FOR INTERNAL COMBUSTION ENGINES
Joseph A. Bascle, Jr., Baton Rouge, La., assignor to Associated Consultants, Inc., Baton Rouge, La., a corporation of Louisiana
Continuation-in-part of application Ser. No. 610,425, Jan. 19, 1967. This application Oct. 10, 1967, Ser. No. 674,218
9 Claims. (Cl. 261—46)

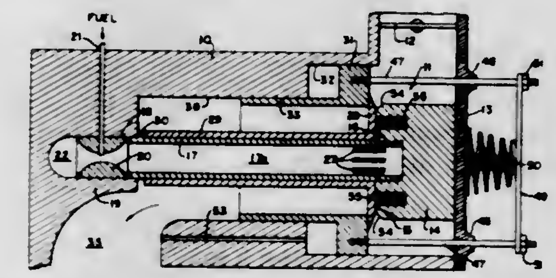

The disclosure herein shows one form of the invention embodying a conventional manifold of an internal combustion engine on which is superimposed an additional manifold with a duplex carburetor valve arrangement whereby on opening the throttle valve, both duplex valves will be automatically moved under engine suction conditions to first open a high-velocity restricted fuel-air supply to the additional manifold to subserve initial fuel-air requirements of an idling or slow speed engine: A second valve from the duplex arrangement being subsequently opened to open a secondary air channel to the conventional manifold for the supply of additional air to balance the mixture for medium and high-speed engine operation.

3,398,939
SHUTTLE HEARTH FURNACES
William A. Morton, Pittsburgh, Pa., assignor, by mesne assignments, to Sunbeam Corporation, a corporation of Illinois
Filed Aug. 26, 1966, Ser. No. 575,401
13 Claims. (Cl. 263—6)

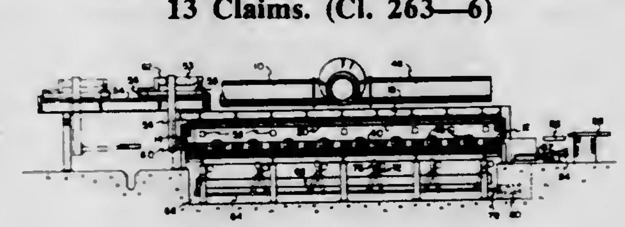

Work is heated in a furnace while it is moved from a point of entry to exit. A pair of normally raised herring-

bone walker frames carry the work. The frames are advanced, lowered, retracted and raised in one cycle. The cycle is repeated until the work is shuttled through the furnace. The walker frames are positioned between longitudinal walls which support the work when the frames are lowered below the height of the longitudinal walls. Seals between the walker frames and the longitudinal walls prevent heat from escaping from the furnace while the work is being shuttled.

3,398,940
AIR HEATING APPARATUS
Basil A. Kosarin, Birmingham, Mich., assignor to American Radiator & Standard Sanitary Corporation, New York, N.Y., a corporation of Delaware
Filed June 13, 1966, Ser. No. 557,090
3 Claims. (Cl. 263—19)

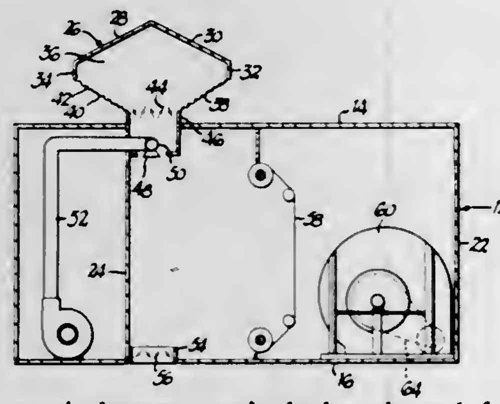

A make-up air heater particularly adapted for use in relatively large industrial buildings such as factories, warehouses, etc. in which heated building air may be recirculated through the heater without exposing the building air directly to combustion gases of the heater burner to thereby prevent the building up of undesirable quantities of carbon dioxide or carbon monoxide.

3,398,941
APPARATUS FOR MONITORING THE TEMPERATURE PREVAILING IN A GRATE OF THE TYPE USED FOR DRYING AND CALCINING SHAPES
Kurt Schmeiser, Cologne, Kurt Lehmann, Hans-Werner Ziegler, and Werner Kowalski, Knapsack, near Cologne, Germany, assignors to Knapsack Aktiengesellschaft, Knapsack, near Cologne, Germany, a corporation of Germany
Continuation-in-part of application Ser. No. 465,909, June 22, 1965. This application Mar. 28, 1967, Ser. No. 626,535
Claims priority, application Germany, Apr. 1, 1966, K 58,897
12 Claims. (Cl. 263—28)

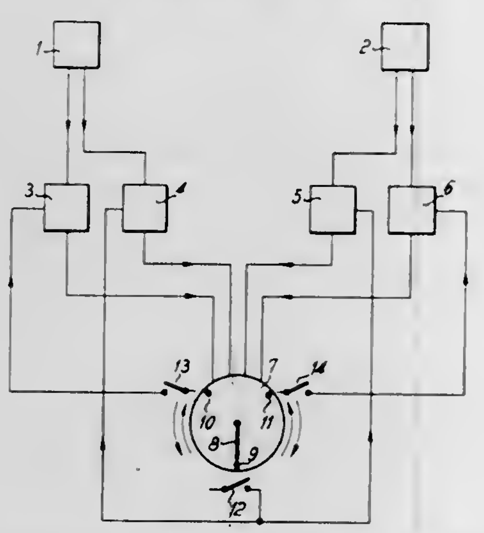

The temperature prevailing on the forward band of a sintering grate and varying within a range defined by an upper and a lower limiting value is monitored by means of a control impulse initiated when the upper or lower temperatures are found to be beyond the limiting values, the control impulse produced causing adjusting means to be moved automatically from a neutral central position to a position antagonistic to the temperature deviation and, after correction of the temperature, to be returned to the neutral central position.

3,398,942
GRATE COOLER CONTROL METHOD AND APPARATUS
Mogens H. Foeg, Old Greenwich, Conn., assignor to F. L. Smidth & Co., New York, N.Y., a corporation of Delaware
Filed July 6, 1966, Ser. No. 563,174
10 Claims. (Cl. 263—32)

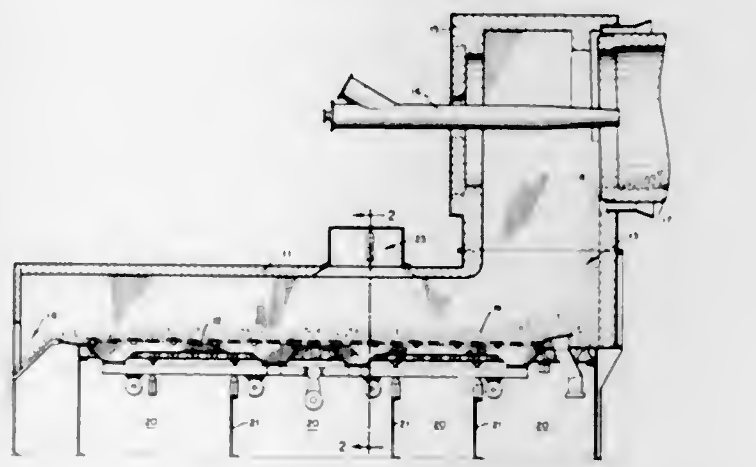

Method and apparatus for controlling the cooling of a moving bed of hot granular material such as cement clinker where the permeability of the bed is subject to change both crosswise and lengthwise and cooling air is forced under variable pressure upwardly through the bed according to changes in the permeability, the control being accomplished by measuring the temperature variations caused by the different thicknesses of the bed measured across the width of the bed and along the path of travel of the material.

3,398,943
APPARATUS FOR SCARFING ROLLED METAL MATERIALS
Shinkichi Goto, Kitakyushu, and Bunnosuke Ushioda, Tokyo, Japan, assignors to Yawata Iron & Steel Co., Ltd., and Tanaka Engineering Works, Ltd., Tokyo, Japan
Filed July 12, 1965, Ser. No. 471,197
Claims priority, application Japan, July 18, 1964, 39/40,774
4 Claims. (Cl. 266—23)

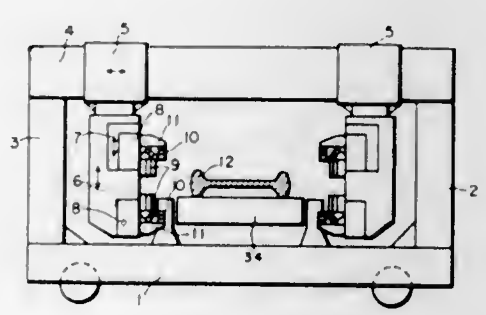

A scarfing apparatus which can be applied to rolled metal members of any shape and wherein a nozzle supporter is provided on the lower part of a vertically slidable body capable of moving in horizontal and vertical directions, and a subsidiary slidable body capable of moving vertically is provided on the upper part of said vertically slidable body, so that the upper and lower surfaces and upper lower portions of the side surfaces of a rolled member to be scarfed can be simultaneously scarfed in a short time.

3,398,944
METALLURGICAL PROCESSING APPARATUS
Raymond Marcel Gut Boucher, Metuchen, N.J., assignor to Macrosonics Corporation, Rahway, N.J., a corporation of New Jersey
Filed Jan. 28, 1966, Ser. No. 523,589
14 Claims. (Cl. 266—34)

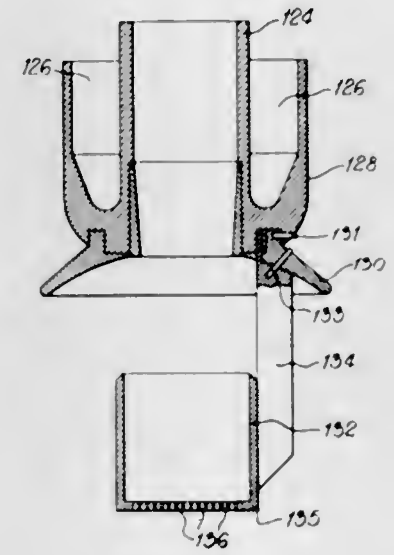

Metallurgical processing apparatus in which gas is introduced within the heating chamber through a hollow lance so that the gas is emitted at supersonic velocity. Both the gas and the acoustic field are projected onto the molten metal in the heating chamber so that the metallurgical processing is accelerated, the metal quality is improved, and the metal sprays and slag projections are controlled.

3,398,945
MOLTEN MATERIAL FURNACE HOLE CLOSURES
Austin Oliver Walpole, Granville, Ohio, assignor to Owens-Corning Fiberglas Corporation, a corporation of Delaware
Filed Dec. 9, 1965, Ser. No. 512,632
5 Claims. (Cl. 266—42)

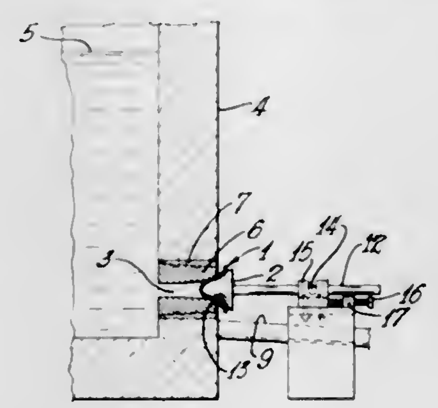

Apparatus and method of stopping the flow of molten metal from a tap hole in a furnace including a sealant which fits over a stopple. The sealant is porous and allows a quantity of molten metal to flow thereinto and soldify to block any further flow of metal.

3,398,946
CONTOURED BRACKET POSITIONED BETWEEN A SPRING AND AXLE
Robert V. Mathers, Grosse Pointe Farms, Mich., assignor to Fruehauf Corp.
Filed Oct. 24, 1966, Ser. No. 594,345
5 Claims. (Cl. 267—52)

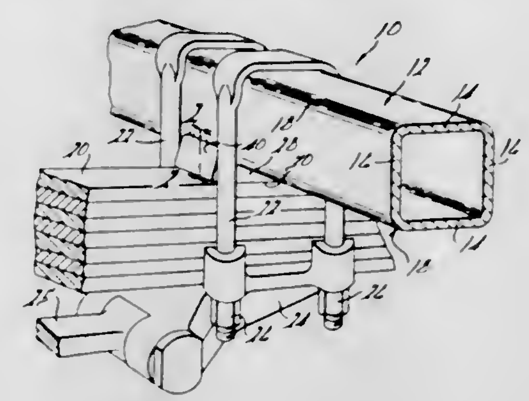

A spring and axle mounting assembly comprised of a specially contoured seating bracket which is positioned between the spring and the axle to allow the axle to be secured to the leaf spring in a manner which acts to prevent and minimize stresses in the mounted axle while at the same time prolonging the life of the axle in actual usage.

3,398,947
MAIL FEEDING APPARATUS
Edward A. Krupotich, Palo Alto, Calif., assignor to Mail Systems Corporation, Redwood City, Calif., a corporation of California
Filed June 6, 1966, Ser. No. 555,375
8 Claims. (Cl. 271—71)

Sheet feeding apparatus, particularly useful in feeding unsealed envelopes in a manner serving to form a stack of unsealed envelopes wherein each succeeding envelope in the stack is nested between the flap and pocket portion of the envelope next beneath. Tiltable weighing platforms arranged in a series are each quickly cleared of envelopes discharged from same in response to weighing movements. The departing envelopes being discharged from a particular weighing platform are power fed downwardly into sorting cribs whereby the leading edge of the envelope is positively driven into engagement with the upper surface of the top envelope to each stack.

3,398,948
WAVE GENERATING DEVICE
Harold L. Grisham, Long Beach, Calif.
(6530 E. 11th, Anchorage, Alaska 99504)
Filed Jan. 27, 1966, Ser. No. 523,388
8 Claims. (Cl. 272—1)

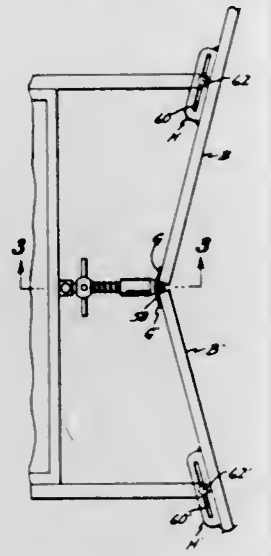

1. A device for use in generating waves in a body of water that includes:
(a) a buoyant body;
(b) two transversely disposed blades;
(c) first means for pivotally connecting adjacently disposed ends of said blades;
(d) second means mounted on said buoyant body for supporting and guiding the outer end portions of said blades;
(e) third means for adjustably supporting said first means forwardly of said body with said blades adjusted to a desired angle relative to one another;
(f) a cable connected to said buoyant body; and
(g) fourth means for concurrently drawing said cable, body and blades forwardly across at least a portion of said body of water for said blades to create waves in said body of water as they travel therethrough.

3,398,949
METHOD OF FORMING A RIGID LOOP FROM A LIMP LOOP
Niels O. Young, Lincoln, Mass., assignor to Block Engineering, Inc., Cambridge, Mass., a corporation of Delaware
Original application Sept. 19, 1966, Ser. No. 595,283, now Patent No. 3,330,557, dated July 11, 1967. Divided and this application June 8, 1967, Ser. No. 644,556
2 Claims. (Cl. 272—8)

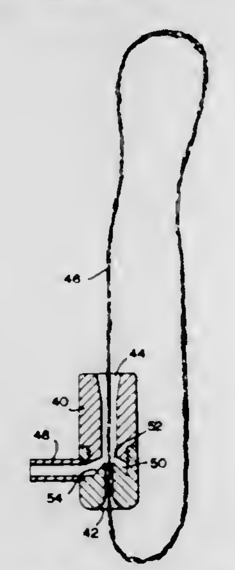

Method of erecting an ordinarily limp closed loop into a rigid structure by driving the loop continuously at high speed through a guide which serves as a constraint on only a portion of the loop.

3,398,950
OPERATOR-CONTROLLED ROTATABLE SPACESHIP MODEL GAME
Robert L. Brass, 38 Acorn Place, Colts Neck, N.J. 07722, and Alexander Feiner, Red Bank, N.J. (1150 Lake Shore Drive, Chicago, Ill. 60611)
Filed July 26, 1965, Ser. No. 474,717
17 Claims. (Cl. 273—1)

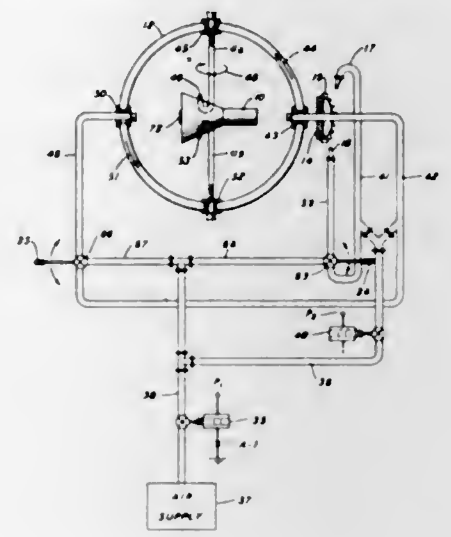

A spaceship model game wherein a model spaceship is mounted in a gimbals ring for rotation about two mutually perpendicular axes. The operator attempts to stabilize the spaceship model in a predetermined attitude, against forces automatically and intermittently applied to the spaceship model. The game includes scoring means actuated when the operator has succeeded in stabilizing the model in the predetermined attitude.

3,398,951
BOWLER'S FINGER PAD WITH FINGER SPACING MEMBERS
Joe Disko, 3400 Clairmont Ave., Apt. 108, Birmingham, Ala. 35222
Filed Mar. 8, 1965, Ser. No. 437,915
5 Claims. (Cl. 273—54)

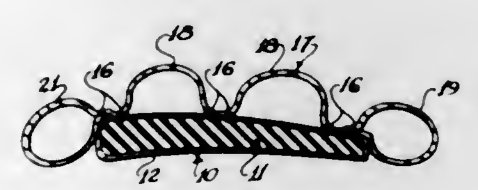

A bowling device comprising a pad of a length in one direction to extend transversely of and span only the second and third fingers of a bowler and of a length in another direction less than the length of said second and third fingers to position the pad intermediate the first and third joints of the second and third fingers. The thickness of the pad is tapered transversely toward the index finger and finger engaging members are carried by the pad to retain the fingers at spaced positions.

3,398,952
BOWLING BALL RETARDER WITH SELF-ADJUSTING DAMPING MEANS
Robert M. Conklin and Robert Torresen, Muskegon, Mich., assignors to Brunswick Corporation, a corporation of Delaware
Filed Feb. 2, 1965, Ser. No. 429,786
4 Claims. (Cl. 273—47)

A ball retarder having a ball-receiving cradle and a fluid mechanism associated with the cradle whereby both

heavy and lightweight bowling balls can enter the cradle at different speeds and all be caused to leave the cradle

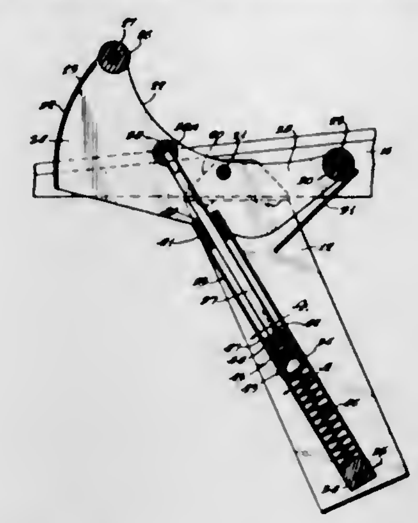

at the same exit velocity because of the selective control of primary and secondary orifices in the fluid system.

3,398,953
BLOCKING MACHINE COMPRISING PIVOTALLY MOUNTED, SPRING-BIASED BLOCKING ARM
Mel W. Thompson, Central Washington State College, Ellensburg, Wash. 98926
Filed Jan. 17, 1966, Ser. No. 521,210
3 Claims. (Cl. 273—55)

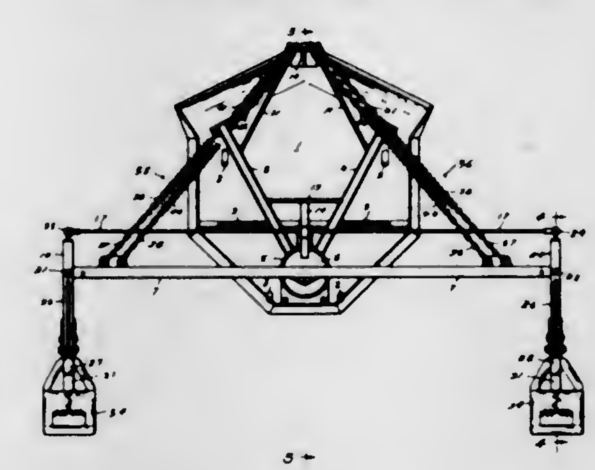

A blocking machine for practicing football blocks having a centrally pivoted arm mounted on a base. At each end of the arm there are blocking pads. Interconnecting the blocking pads there is a parallelogram link mechanism to maintain the blocking pads in parallel spaced relation to each other as the arm moves about its pivot. Also attached to the arm are a pair of spring biasing members which return the arm to a neutral position after removal of a force against the blocking pads.

3,398,954
FOOTBALL PASS PRACTICE FENCE
Zygmund Nedwick, Glen Cove, N.Y., assignor to Athletic Devices, Inc., Glen Cove, N.Y.
Filed Mar. 7, 1966, Ser. No. 532,346
10 Claims. (Cl. 273—55)

1. A football practice fence comprising:
(a) a front section;
(b) parallel side sections each connected at corresponding ends to an end of said front section;
(c) a horizontal rail at substantially the height of the shoulder of a passer in each section;
(d) supporting legs for each rail;
(e) readily attachable and detachable means connecting said supporting legs to its associated rail;
(f) a plurality of flat panels suspended in spaced relation on said rails, each representing a defensive pass rusher player; and
(g) a plurality of flexible upstanding rods at the upper end of each panel and projecting above the rail on which said panel is suspended sufficiently to represent an upraised arm of said pass rusher,

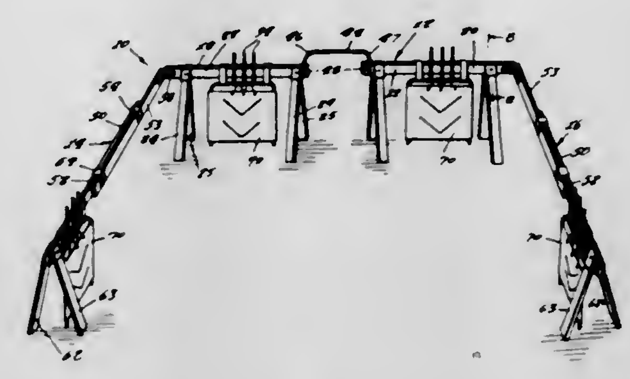

whereby, with a player positioned facing said fence sections to practice throwing passes, said upstanding rods will stop or deflect a thrown football, the panels will serve to block the downfield view, and the spacing between the rods of adjacent panels will define lanes through which the player throws the football to practice throwing passes.

3,398,955
TARGET WITH BALL SHIFTABLY TETHERED THERETO
Robert G. Rakestraw, 304½ E. 6th St., Rome, Ga. 30161
Filed July 11, 1966, Ser. No. 564,275
8 Claims. (Cl. 273—98)

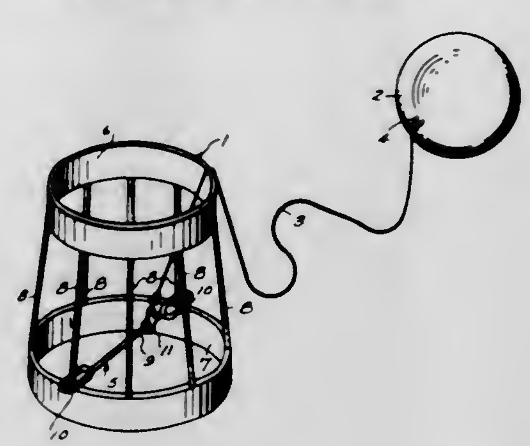

1. A toy comprising in combination:
a ball for bouncing back and forth between players;
a cord attached between the ball and a goal into which the ball is to be bounced for scoring points;
a basket which serves as a goal, said basket having openings at opposite ends for receiving said ball when said basket is placed on a horizontal surface with one of said open ends positioned upwardly; and
tethering means connected to said basket for attaching one end of said cord to the basket, said tethering means being connected to the basket so as to be shiftable from one end of the basket to the other, thereby providing for a positioning of said tethering means at a lower end of said basket irrespective of which open end of said basket is directed upwardly.

3,398,956
RETALIATORY GAME
Frank J. Lukes, 106 E. Bellevue Place, Chicago, Ill. 60611
Filed Aug. 3, 1965, Ser. No. 476,830
15 Claims. (Cl. 273—101)

A retaliatory game of the type having opposing missile

elements on opposite sides of a central barrier, the missiles held on launchers in a cocked state of readiness for launch-

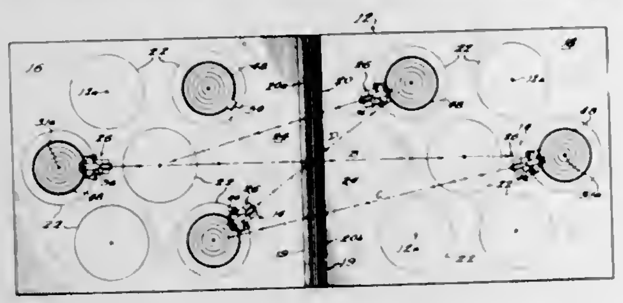

ing and being launchable responsive to the blow of an opposing missile striking the launcher.

3,398,957
COMBINED TARGET AND PROJECTOR WITH AURAL INDICATOR
Frederick H. King, 721 Jewell, Ferndale, Mich. 48220
Filed Dec. 6, 1965, Ser. No. 511,770
2 Claims. (Cl. 273—101)

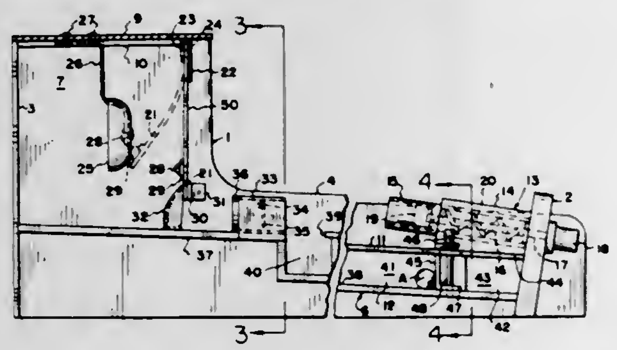

A housing having a front and rear end walls, and mounting a ball shooting device at the front end portion thereof to shoot balls toward a target disposed at the rear end portion of the housing, with the provision of a ball storage chamber, having a pocket with an opening giving access to said pocket for manual withdrawal of said balls, and with the further provision of means for delivering spent balls to said pocket for such withdrawal, and the still further provision of a gate having vertical travel between open and closed positions to respectively afford or deny access of said balls to said pocket.

3,398,958
ARCHERY TARGET WITH POINT OF IMPACT DETECTING AND INDICATING MEANS
Charles P. Sanzare, Philadelphia, Pa., assignor to Brunswick Corporation, a corporation of Delaware
Original application Mar. 4, 1963, Ser. No. 262,399. Divided and this application May 3, 1967, Ser. No. 635,791
3 Claims. (Cl. 273—102.2)

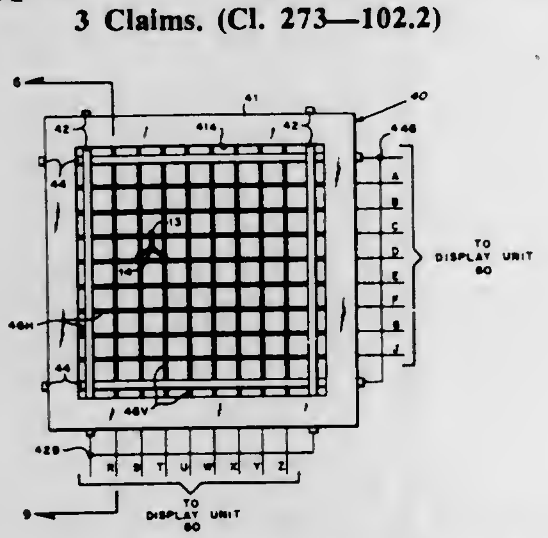

An automatic archery range including a target towards which arrows may be fired from a shooting line, a backstop behind the target for stopping arrows penetrating the target, means for detecting the point of impact of an arrow on the target, said means comprising a grid of crossed conductive wires and associated buss bars disposed about the flight path of the arrows, said wires being spaced to permit free passage of an arrow shaft but to be displaced by the arrow fletching into contact with the buss bars, and a means responsive to the detecting means for indicating on a simulated target the point of impact of an arrow on the target, said indicating means comprising spaced indicating devices arranged in a grid pattern corresponding to that formed by the crossing points of said wires.

3,398,959
ARCHERY RANGE WITH ARROW RETURN CONVEYOR
Charles P. Sanzare, Philadelphia, Pa., assignor to Brunswick Corporation, a corporation of Delaware
Continuation of application Ser. No. 262,399, Mar. 4, 1963. This application May 3, 1967, Ser. No. 635,792
21 Claims. (Cl. 273—102.2)

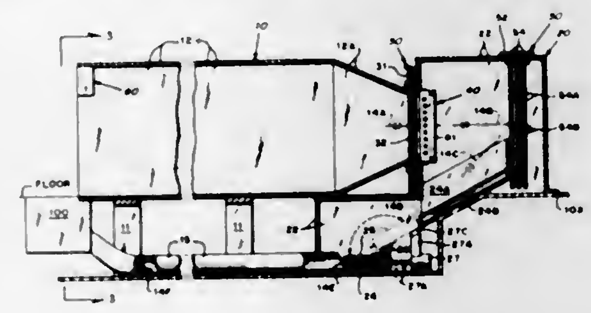

An automatic archery range including a target towards which arrows may be fired from a shooting line, means for detecting and indicating the point of impact of an arrow on the target, a backstop behind the target for stopping arrows penetrating the target, said backstop and target being spaced a distance greater than the length of an arrow, an arrow container adjacent the shooting line and a means for receiving arrows rebounding from the backstop and delivering them to the arrow container with the pointed end thereof first and the fletched end thereof last.

3,398,960
ONE-PIECE ARROWHEAD WITH CUTTING BLADES
Cornelius F. Carroll, Jr., 1310 Tuxedo, Parma, Ohio 44134
Filed Feb. 23, 1966, Ser. No. 529,367
10 Claims. (Cl. 273—106.5)

An arrowhead blade structure which may be formed from a single piece of metal, indexed and locked to the projectile shaft; the blade structure being readily detachable and reversible in position on the shaft.

3,398,961
GOLF CLUB WITH WEIGHTED COVER
Mark A. Higdon, 1405 N. 11th St., Fort Dodge, Iowa 50501
Continuation of application Ser. No. 351,422, Mar. 12, 1964. This application May 1, 1967, Ser. No. 635,269
2 Claims. (Cl. 273—194)

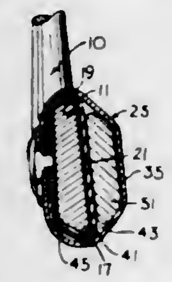

A golf club device containing a cover means detachably mounted on the club head, connecting means holding the cover means to the club head, a pocket portion extending over the hitting surface of the club, and a substantially flat and narrow weight element in the pocket portion.

3,398,962
SPEED CHANGER FOR A PHONOGRAPH RECORD PLAYER
Willard J. Faulkner, Glen Ellen, Ill., assignor to Karl W. Jensen, La Grange, Ill.
Original application Feb. 24, 1964, Ser. No. 346,602, now Patent No. 3,304,092, dated Feb. 14, 1967. Divided and this application Dec. 20, 1966, Ser. No. 627,568
5 Claims. (Cl. 274—9)

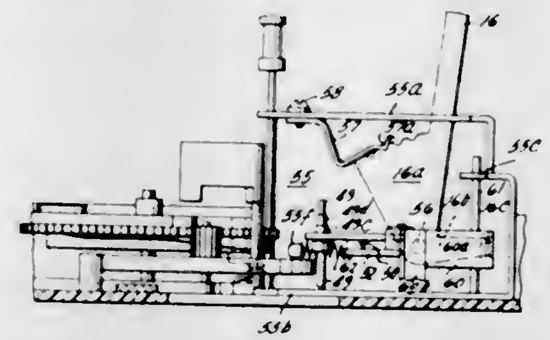

A multiple speed drive for a record player turntable wherein a motor is resiliently mounted on a base below the turntable and has a motor shaft extending upward through the base beside the turntable with a plurality of different diameter portions. An idler wheel having a wide flexible rim is disposed between the motor shaft and the turntable rim and is moveable upward or downward relative to the motor shaft. The flexible rim bends readily so that idler does not have to be moved away from the turntable and shaft when shifting speeds. The support means for the idler includes a level which extends above the base with adjustable detent means for holding the idler in the desired position.

3,398,963
CONNECTION FOR A TONE ARM OF A RECORD CHANGER
Günter Wersche, Berlin, Germany, assignor to North American Philips Company, Inc., New York, N.Y., a corporation of Delaware
Filed Feb. 28, 1967, Ser. No. 619,464
Claims priority, application Germany, Mar. 28, 1966, P 39,079
5 Claims. (Cl. 274—23)

A connection between the tone arm of a record changer and the support shaft the latter of which is connected to the drive mechanism of a record changer. The tone arm is resiliently clamped to the support shaft such that forces applied to the tone arm during the record change cycle are not imparted to the support shaft and hence the drive

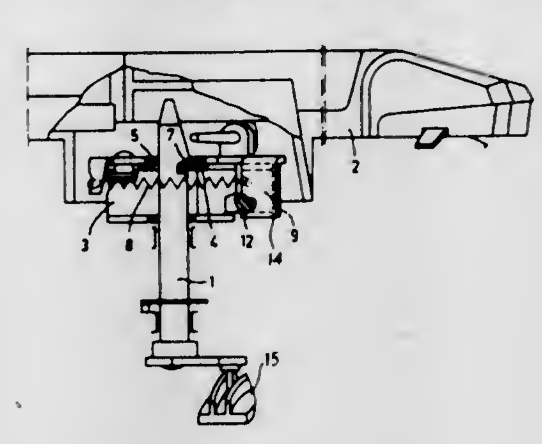

mechanism of the record changers. The connection also provides regulation of the angular disposition in a horizontal plane of the tone arm with respect to the shaft thereby insuring proper engagement between the tone arm and the record during the record change cycle.

3,398,964
STUFFING BOX
James Trefil, Berwyn, Ill., assignor to Crane Co., Chicago, Ill., a corporation of Illinois
Filed May 4, 1966, Ser. No. 547,544
11 Claims. (Cl. 277—21)

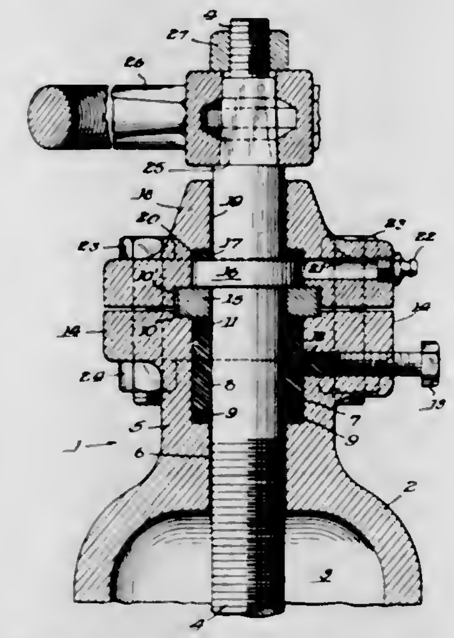

A non-rising stem gate valve utilizing an improved stuffing box construction in which the stem collar of the rotatable valve stem is positioned within a recess in a stem retaining flange above the injection type stuffing box and is provided with easily replaceable thrust bearing members on both sides of the stem collar and having lubrication means. The lower thrust bearing member also functions as a gasket between the upper flange portion of the valve bonnet and the stem retaining flange and defines the upper limit of the stuffing box.

3,398,965
QUICK CHANGE TOOL HOLDER
John R. Cox, Lakewood, Ohio, assignor to Balas Collet Company, Cleveland, Ohio, a corporation of Ohio
Filed May 26, 1966, Ser. No. 553,234
7 Claims. (Cl. 279—30)

1. A tool holder comprising a shank member having an open ended tubular portion at one end, said tubular portion having a cylindrical inner wall and a radially out-

wardly extending circumferential groove in said wall, said groove being spaced inwardly from the open end of said tubular portion and having a base portion and an inclined conical cam face portion extending from said base portion to said inner wall, said shank member having a ball feeding hole extending radially through said tubular portion into said groove in alignment with said base portion thereof, a tubular tool receiving bushing having a sliding fit in said tubular portion of said shank member and having an inside diameter adapted to receive a tool to be held, said bushing having a plurality of circumferentially spaced apart ball retaining apertures extending radially through the wall thereof, said apertures being of smaller diameter at their inner ends than at their outer ends, tool gripping balls radially movably supported in

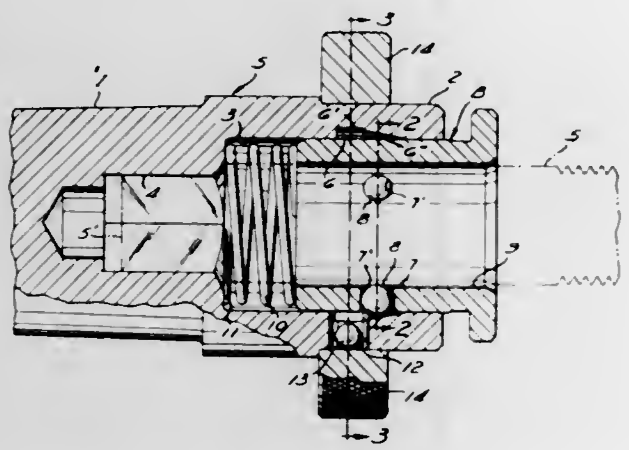

said apertures and circumferentially movable in said groove in said shank member when said apertures are aligned therewith, the diameter of said balls being greater than said smaller inner end diameter of said apertures and smaller than the diameter of said ball feeding hole, said inclined cam face of said groove being adapted to move said balls radially inwardly in said ball retaining apertures into gripping engagement with a tool in said bushing when said bushing is moved axially outwardly of said shank member, spring means for urging said bushing outwardly of said shank member, ball blocking means in said ball feeding hole for blocking said balls against movement radially out of said apertures in said tubular bushing, and means for retaining said ball blocking means in said ball feeding hole.

3,398,966
SELF-TIGHTENING CHUCK
Edward J. Chalfant, Elyria, and Heinrich H. Frank, Amherst, Ohio, assignors to Emerson Electric Co., St. Louis, Mo., a corporation of Missouri
Filed Feb. 18, 1966, Ser. No. 528,486
5 Claims. (Cl. 279—116)

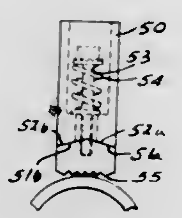

A chuck has ways in which gripping jaws are disposed and advanced into engagement with a work piece by a scroll plate. Each jaw is provided with a main body which has an end seat formed by oppositely inclined surfaces. The work engaging position has surfaces complementary to those on the body and is held against the seat on the body by a screw and spring. When the work piece encounters resistance to its rotation the friction on the gripping part of the jaw causes it to move on the body seat which tightens the jaw against the work piece.

3,398,967
LEVELLING DEVICES
Norman Brocklebank, Beverley, and Bert Richardson and Jesse Acum, Hull, England, assignors to Priestman Brothers Limited, Hull, England, a British company
Filed Oct. 27, 1966, Ser. No. 589,936
Claims priority, application Great Britain, Nov. 1, 1965, 46,099/65; Mar. 14, 1966, 11,085/66
14 Claims. (Cl. 280—6)

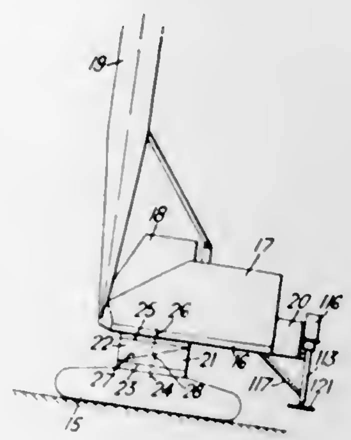

1. In an apparatus comprising a substructure with a nominal vertical axis, a superstructure with a nominal vertical axis and means for levelling said superstructure relatively to said substructure so that said nominal vertical axis of said superstructure is truly vertical when said nominal vertical axis of said substructure is offset at a small angle to the true vertical; the improved superstructure levelling means which comprises a first intermediate member, a first rotary bearing coupling said intermediate member to said substructure and having an axis of rotation coincidental with said nominal vertical axis of said substructure, a second rotary bearing coupling said intermediate member to said superstructure and having an axis of rotation equally inclined to said nominal vertical axis of said substructure and to said nominal vertical axis of said superstructure, a second intermediate member, mounted on said first intermediate member through said second rotary bearing, a third rotary bearing coupling said superstructure to said secondary intermediate member and having an axis of rotation coincidental with said nominal vertical axis of said superstructure, and means for producing rotation at said first, second and third rotary bearings.

3,398,968
SKI HAVING TENSIONING MEANS TO CHANGE THE FLEXIBILITY OF THE SKI
Maximilian Friedrich Mutzhas, Wettersteinplatz 3, Munich, Germany
Filed Feb. 21, 1966, Ser. No. 529,112
Claims priority, application Germany, Feb. 26, 1965, M 64,339
19 Claims. (Cl. 280—11.13)

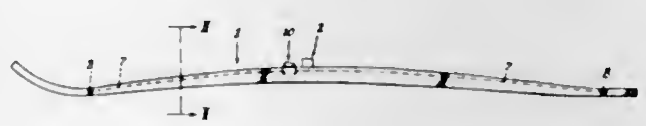

A ski comprising a plurality of interconnected layers arranged in superimposed relation, of which an intermediate layer has provided therein a lengthwise extending slot or groove in which is disposed a tension producing means in the form of straps extending from substantially the center portion of the ski toward the outer ends thereof where these ends of the straps are anchored to the ski body while the inner ends of the straps engage or are subjected to the effect of a tensioning member, such as a rotatable cam which upon rotatable adjustments transfers variable thrust forces to said straps for changing the elasticity of the ski body against deflections at right angles to its running surface.

3,398,969
ATTACHMENT FOR BOOT TO ADAPT BOOT FOR USE WITH SKI BINDING
Thomas E. Perry, 15396 Dale Road, Chagrin Falls, Ohio 44022
Filed Dec. 6, 1965, Ser. No. 511,920
7 Claims. (Cl. 280—11.35)

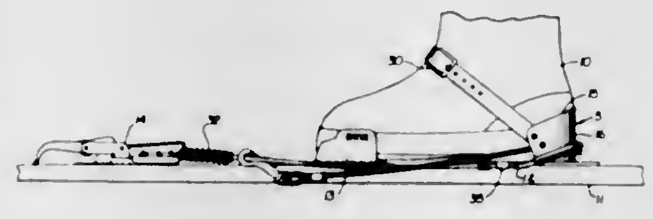

A cup-like attachment for a conventional boot to underlie the heel portion of the boot. The attachment is provided with a projection or other means such as a recess to receive the heel attaching part of a ski binding such as a heel cable.

3,398,970
SKI SLED
Kotaro Horiuchi, Hamamatsu-shi, Japan, assignor to Nippon Gakki Seizo Kabushiki Kaisha, Hamamatsu-shi, Japan, a corporation of Japan
Filed Aug. 3, 1966, Ser. No. 569,910
11 Claims. (Cl. 280—16)

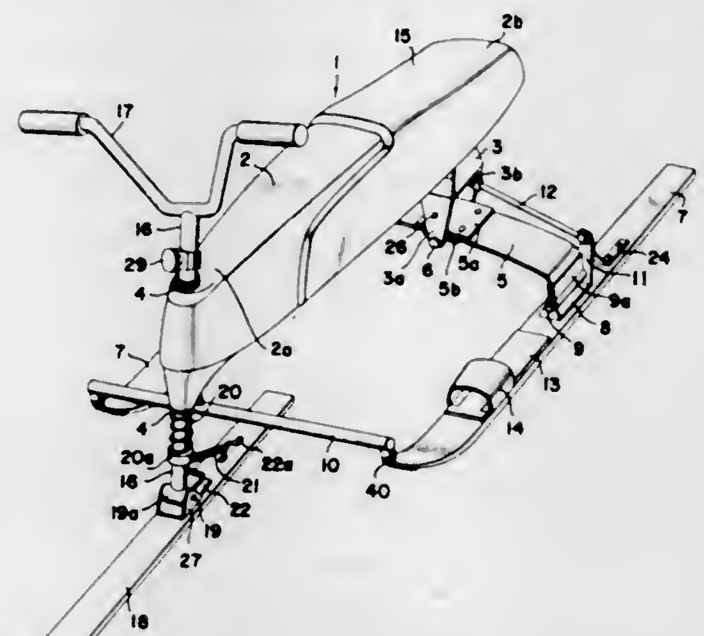

A three-ski sled having a body and front ski and rear skis connected thereto which follow the inclination of the body as effected by a leaning action of the rider. The sled is so constructed that the edging of the skis are fully utilized with the rear skis being canted inwardly and having foot binding means. The rear skis are rotatably supported by front-lifted longitudinal axles, so that the steering effect may also be obtained by the rear skis with the inclination of the body.

3,398,971
DEVICE FOR TRANSPORTING INVALIDS
Lloyd E. Seidel, Rte. 3, Georgetown, Ohio 45121
Filed Oct. 4, 1966, Ser. No. 584,256
15 Claims. (Cl. 280—47.11)

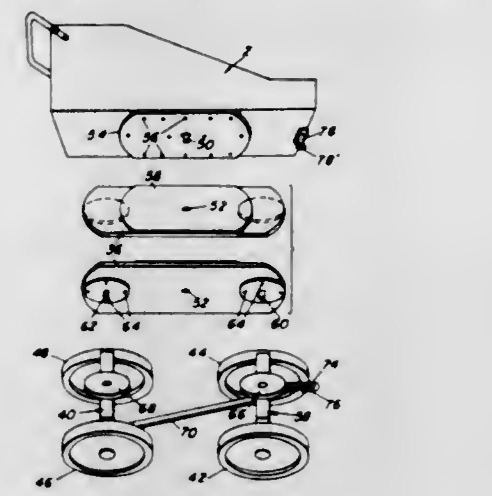

A vehicle having a body portion which includes means for supporting a patient and a steering mechanism which includes a frame pivotally mounted on the body and carrying a pair of wheel supporting assemblies pivotally mounted on the frame. The body portion is linked to one of the wheel supporting assemblies whereby relative turning motion of the body with respect to the frame causes the attached wheel assembly also to turn with respect to the frame. Means are provided interconnecting the front and back wheel supporting assemblies so that a turning moment applied to the front wheels by means of the body portion is transmitted to the rear wheel assembly in a manner to cause an opposite turning moment. The turning of the wheel assemblies in opposite directions provides a highly responsive steering mechanism which makes the vehicle maneuverable and easy to handle. The body portion is provided with a bed of adjustable inclination and with means for preventing a patient occupying the bed from accidentally falling off the vehicle.

3,398,972
STABILIZING DEVICE FOR ROLLING VEHICLES
Hans Olov Ekengard, Gardsstigen 10, Alvsjo, Sweden
Filed Aug. 8, 1966, Ser. No. 571,121
3 Claims. (Cl. 280—150.5)

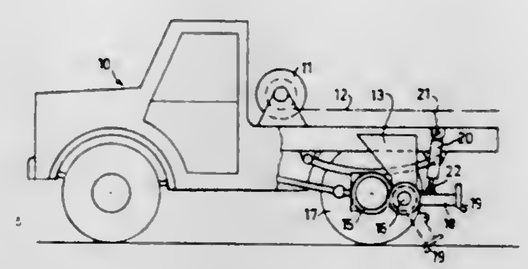

A device for maintaining a vehicle such as a tow truck stationary while a winch mounted thereon effects a tractional force longitudinally of the vehicle. The device or support means includes an arm positioned at each side of the vehicle chassis, one end of the arm being journalled on the chassis and capable of swinging movement about a horizontal axis to engage the ground behind the rear wheels in order to lift them from the ground. The support means includes at least two curved plate members which when in the retracted position overlap a fixed cooperating mudguard to form an unbroken surface which prevents the ingress of dirt and other foreign matter.

3,398,973
DRIVING CHAIN TENSIONING DEVICE IN A BICYCLE EQUIPPED WITH COASTER BRAKE AND EXPOSED SPEED CHANGE MECHANISM
Keizo Shimano and Masashi Nagano, Sakai, Japan, assignors to Shimano Kogyo Kabushiki Kaisha, Sakai, Japan
Filed June 8, 1967, Ser. No. 644,550
Claims priority, application Japan, June 15, 1966, 41/56,903
1 Claim. (Cl. 280—236)

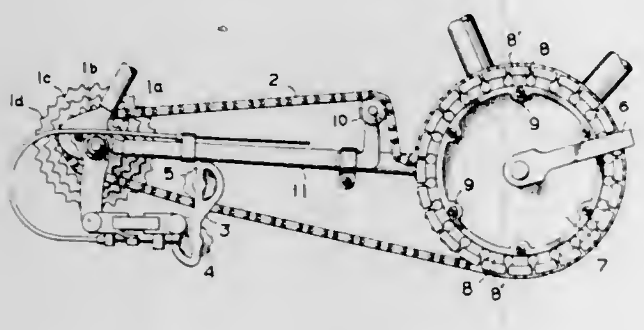

This invention relates to a driving chain tensioning device in a bicycle equipped with a coaster brake adapted to be put into operation when the front sprocket is rotated in the reverse direction for applying the coaster brake.

3,398,974
WALKER ATTACHMENT FOR WHEEL CHAIR
Thomas L. Edwards, 4650 Winslow Court, Dayton, Ohio 45430, and Raymond S. Kleismit, Dayton, Ohio; said Kleismit assignor to said Edwards
Filed June 1, 1966, Ser. No. 554,461
7 Claims. (Cl. 280—289)

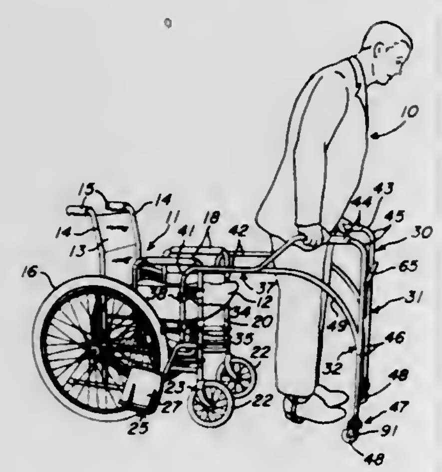

A walker attachment for a wheel chair which includes two side assemblies which pivot between a retracted position adjacent the side of the chair and an extended position wherein they cooperate to provide a walker in front of the chair. Wheels are provided on the front portion of the side assemblies, and brakes lock these wheels and the large chair wheels when downward pressure is applied to the side assemblies. Arm supports can be extended to engage the armpits of the patient to support him in a standing position with his hands free.

3,398,975
ADJUSTABLE HITCH FOR TRACTORS
La Moyne Roberts, Tremonton, Utah, assignor of forty-five percent to Charles R. Taylor, Tremonton, Utah
Filed May 5, 1966, Ser. No. 554,621
5 Claims. (Cl. 280—468)

An assembly for moving an earth working implement relative to a tractor including a draw bar pivotally connected to the rear of the tractor to which the earth working implement is attached, an hydraulic drive cylinder connected to the draw bar, and a control mechanism connected to the tractor in the vicinity of the front wheels thereof comprising an hydraulic cylinder arrangement which is either electrically or mechanically actuated by

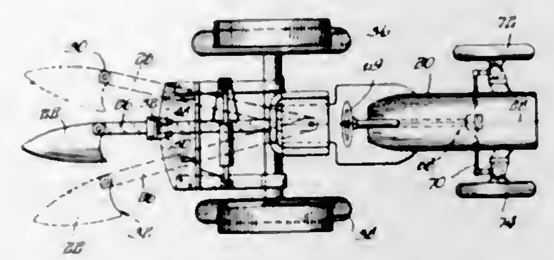

the turning of the steering mechanism of the tractor to in turn move the draw bar and hence the earth working implement in a corresponding direction. The hydraulic drive cylinder, when disconnected from the control mechanism, serves to dampen the movement of the draw bar.

3,398,976
VEHICULAR TOWING BAR
Ludwig H. Menzl, W148 N7535 Woodland Drive, Menomonee Falls, Wis. 53051
Filed Sept. 26, 1966, Ser. No. 582,071
8 Claims. (Cl. 280—495)

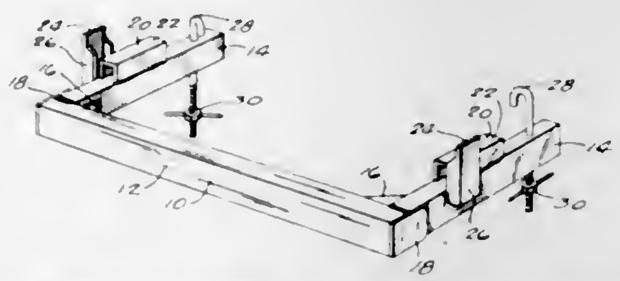

1. A detachable tow bar for towing vehicles having a wide span between longitudinal side frame members and overhanging bumpers by means of a standard draw bar comprising:

a beam extending laterally of said side frame members and below said bumper when the tow bar is in the mounted position, for operative association with said draw bar;

a pair of supporting members having end portions extending rearwardly from said lateral beam, said members being adapted to abut said side frame members; and

means mounted on said end portions for attaching said supporting members to said side frame members, said means comprising hooks mounted in said support members and cooperating with said side frame members to place the tow bar in the mounted position.

3,398,977
PIPE COUPLING
Rikizo Yoneda, 64 Shimogamo Umenoki-cho, Sakyo-ku, Kyoto, Japan
Continuation-in-part of application Ser. No. 510,203, Nov. 29, 1965. This application Oct. 7, 1966, Ser. No. 585,066
Claims priority, application Japan, Feb. 13, 1965, 40/11,054
3 Claims. (Cl. 285—45)

A coupling device comprising: a female part having a through axial bore and provided adjacent the mating end thereof with a radially outwardly extending flange portion; a male part having a through axial bore and provided adjacent the mating end thereof with a circumferentially extending shoulder; a cover member removably mounted adjacent the first end thereof on said flange, said cover member having adjacent the second end thereof a radially extending wall portion having a centrally disposed opening adapted to freely receive the mating end of said male part, and said cover member cooperating with said flange portion to define a radially inwardly opening recess; a divider means removably positioned within said recess by the cover and flange portion and cooperating therewith to divide said recess into radially inwardly opening first and second cavities, respectively; an annular sealing means disposed within said first cavity; a locking means disposed within said second cavity, said divider means, said annular sealing means and said locking means being removable from said recess through said first end of said cover when removed from said flange portion, said locking means including a plurality of segments and resilient means encircling said segments whereby said segments form a radially outwardly expansible ring whose nonexpanded inner diameter is less than the outer diameter of the mating end of said male part, said ring having

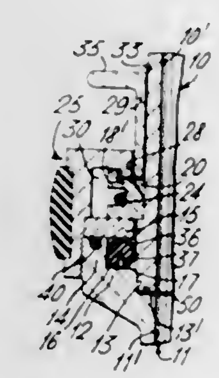

an inwardly disposed portion adapted to engage said shoulder to effect a locking connection between said male and female parts to normally maintain said parts in a coupled position and to prevent withdrawal of said male part through said wall opening, each of said ring segments and said wall portion having axially extending means disposed in overlapping relation and cooperating to prevent removal of said ring through said wall opening upon withdrawal of said male part therethrough, said first cavity being bounded in part by an axially extending inwardly facing surface, said annular sealing means being operably disposed in engagement with said axially extending inwardly facing surface of said first cavity and dimensioned to sealingly engage said second diameter portion of said male part when in coupled position; and lock release means slidably mounted on said male part for movement axially toward said shoulder, and said sleeve when moved towards said shoulder being adapted to engage said segments and expand said ring against the bias of said resilient means to release said locking connection.

3,398,978
RESILIENT COUPLING
Fred Gasche, Erie, Pa., assignor to Autoclave Engineers, Inc., Erie, Pa., a corporation of Pennsylvania
Continuation-in-part of application Ser. No. 392,722, Aug. 28, 1964. This application May 13, 1965, Ser. No. 458,828
14 Claims. (Cl. 285—187)

A resilient coupling for connecting two lengths of tubing which are subjected to extreme and cycling pressures and temperatures having hubs secured to the tube ends. Flanges extend radially from each hub presenting surfaces facing each other and second surfaces axially removed from the facing surfaces. A split clamp surrounds the hubs and has surfaces extending opposite to the axially removed surfaces. A resilient ring-like member extends around at least one hub in a space between the flange surface and opposed surface on the clamp. Means draw the

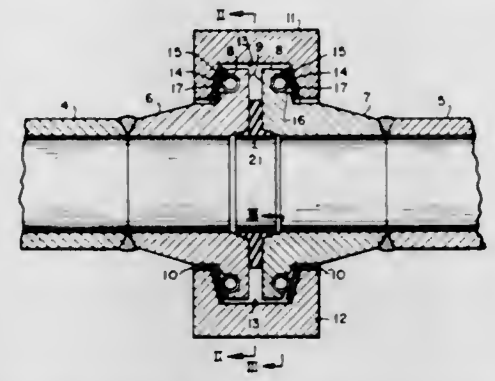

clamp portions together and compress the tubular resilient member.

3,398,979
FLOW THROUGH BARREL TO PREVENT CROSSOVER IN BACK-TO-BACK BLOW-OUT INSTALLATIONS
Courtney C. Pope, Haines City, Fla., assignor to Sim-pli-ci-ty Products Corporation, Haines City, Fla., a corporation of Florida
Filed Nov. 30, 1966, Ser. No. 598,060
1 Claim. (Cl. 285—64)

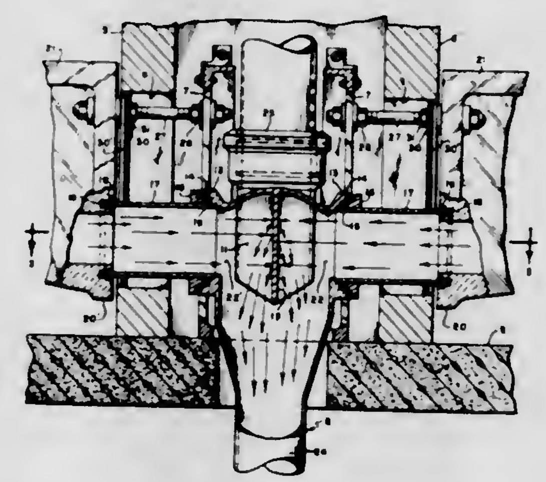

A fixture assembly is provided for use with back-to-back mounted water closets. The fixture assembly includes a barrel having openings in opposite sides thereof and mounted with one of the openings opposite to each of the water closets, flow sleeves communicating with the openings and also with the water closets for delivering water from the water closets to the barrel, a first vertically extending soil pipe leading from above the barrel down into the barrel and past the sleeves and openings, a second soil pipe communicating with the barrel below the openings, and a baffle within the barrel dividing the interior of the barrel into two chambers. The baffle extends to a point vertically below the sleeves for directing water from the sleeves down into the second soil pipe and preventing water flowing from one sleeve to cross the barrel and enter the other sleeve. Since the first soil pipe extends downwardly past the sleeve and openings, water flowing from above the barrel is carried downward past the sleeves and openings to prevent entry of such water into the sleeves.

3,398,980
SWIVEL JOINT
Thomas Gardner Hill, Atlanta, Ga., assignor to Lockheed Aircraft Corporation, Burbank, Calif.
Filed Sept. 20, 1965, Ser. No. 488,666
1 Claim. (Cl. 285—98)

A low friction pressure type swivel joint of minimum size and weight incorporating a standard V band type clamp is provided as a coupling for sheet metal ducts.

This joint is formed by two flanges attached to one duct end and defining ball bearing races that face each other and capture between them a multiplicity of balls separated by lateral ball bearing races projecting from a surrounding annular member. One side of this annular member is sloped to mate with one leg of the V clamp, and

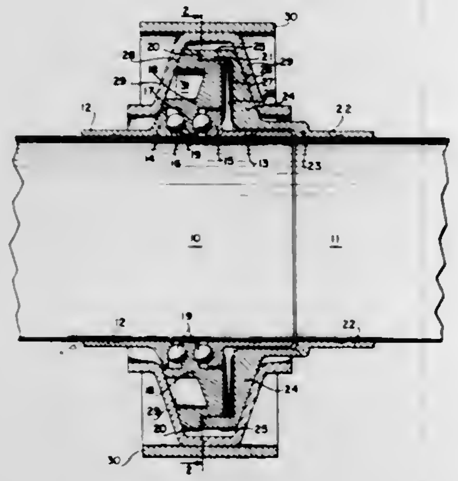

the other side is perpendicular and shouldered on top to mate with a single flange attached to the other duct end, so that the duct ends are held in true concentricity and a gap is created between the side of the annular member and single flange to accommodate a seal. The surface of the single flange opposite the gap slopes to mate with the other leg of the V clamp holding the joint together.

3,398,981
CONNECTING SYSTEM INCLUDING CLIP ELEMENTS
René Vincens, Ancourt, France, assignor to Societe Civile de Recherches et d'Etudes Industrielles, Neuville-les-Dieppe, Seine Maritime, France, a French company
Filed Oct. 12, 1966, Ser. No. 586,282
Claims priority, application France, Oct. 13, 1965, 3,226
12 Claims. (Cl. 287—189.35)

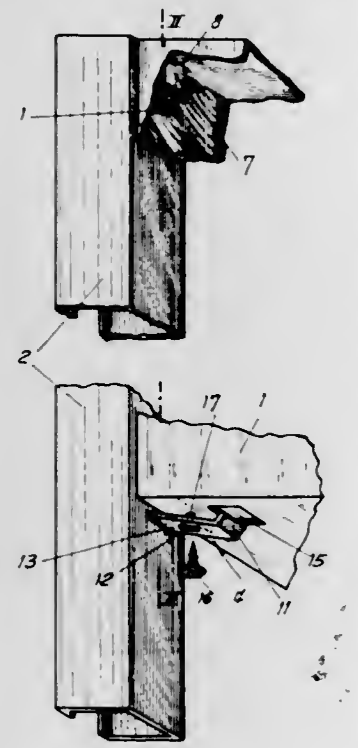

A connection, suitable for furniture construction, in which two hollow members, one horizontal and the other vertical are rigidly joined and which has no holes in the surface to mar its appearance. The vertical member has two vertically spaced openings in one side thereof, to permit the insertion, in the upper opening, of a clip which has a leg extending outwardly and downwardly through an opening in the top of the horizontal member, and the insertion, in the lower of the vertically spaced openings, of a clip having an outwardly and upwardly extending leg which projects through an opening in the bottom of the horizontal member, so that when a screw is threaded through the lower clip and the horizontal member to bring the lower clip upwardly against the horizontal member, the horizontal member is raised and its end is brought into contact with the side of the vertical member.

3,398,982
ATTACHMENT FITTING FOR PLASTER PANELS
Edmond F. Venzie, Jr., Blue Bell, Pa. (% National Plaster Block Mfg. Co., 2238 N. 27th St., Philadelphia, Pa. 19132)
Filed Jan. 12, 1967, Ser. No. 608,846
4 Claims. (Cl. 287—189.35)

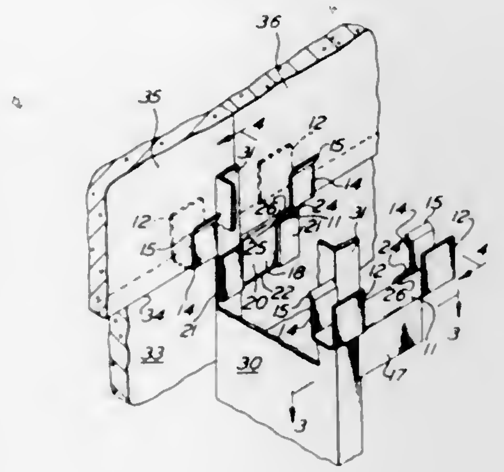

An attachment fitting for plaster panels that connects plaster panels together vertically and horizontally and to upright studs.

3,398,983
IMPLEMENT MOUNTING MECHANISM
Nils O. Olsson, Ancaster, Ontario, Canada, assignor to International Harvester Company, Chicago, Ill., a corporation of Delaware
Filed Sept. 16, 1966, Ser. No. 579,940
2 Claims. (Cl. 287—189.36)

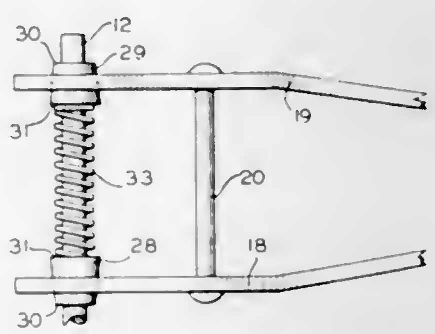

Quick attaching means for mounting the spaced drag links of a grain drill furrow opener on a supporting frame, consisting of an opening formed in each of the links having restricted entities for the reception of a shaft on which is slidably mounted a tapered sleeve or insert for each opening. These small ends of the tapered sleeve are directed outwardly and the sleeves wedge into the openings, a spring surrounding the middle of the shaft having its ends engageable with the inserts to hold them in the openings.

3,398,984
MOTOR VEHICLE WITH LATERALLY ADJUSTABLE CAB
Fortunato S. Ajero, Milwaukee, Wis., assignor to Koehring Company, Milwaukee, Wis., a corporation of Wisconsin
Filed June 2, 1966, Ser. No. 554,728
8 Claims. (Cl. 296—1)

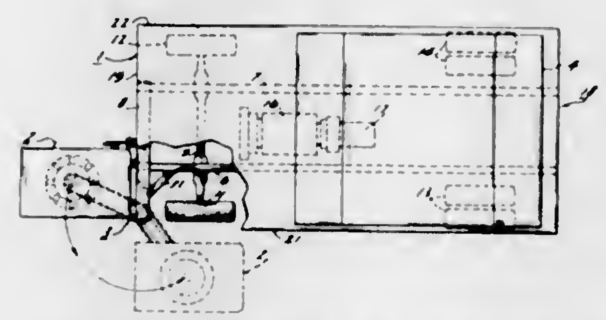

A truck chassis carries a flat cargo deck, and the driver's seat and manual vehicle controls are mounted in a cab which is swingable on a horizontal arc about the left front corner of the chassis selectively into a transit position in front of the deck and into a load transfer position at the left side of the deck.

3,398,985
MOTOR VEHICLE BODY STRUCTURE
Edgar W. Rhoades, Fort Wayne, Ind., assignor to International Harvester Company, Chicago, Ill., a corporation of Delaware
Filed Oct. 31, 1966, Ser. No. 590,859
10 Claims. (Cl. 296—57)

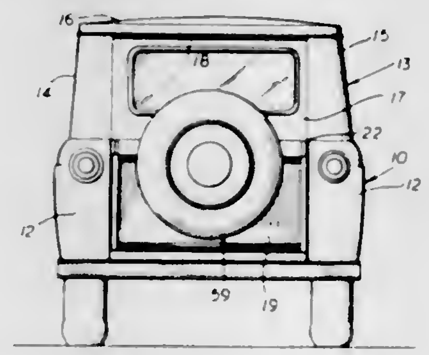

Supporting means for the endgate of a motor vehicle body which endgate is capable of swinging about a horizontal axis between a closed position and a full open position. The supporting means includes a pair of articulated links, one of which is pivotally connected to the endgate and the other of which is pivotally connected to the body. A releasable safety catch means is also incorporated into the articulated links which is operable automatically to positively arrest further downward swinging movement of the endgate beyond a partially opened position reached by the endgate pivoting a predetermined arcuate distance from its generally vertical upright, closed position which safety catch means is readily releasable to permit further swinging of the endgate to its horizontally extending, fully opened position. A spare tire and wheel assembly is also adapted to be mounted on the exterior of the endgate so as to be swingable therewith.

3,398,986
SEAT POSITIONING MECHANISM
Robert I. Homier, Farmington, Mich., assignor, by mesne assignments, to Lear Siegler, Inc., Santa Monica, Calif., a corporation of Delaware
Filed Dec. 8, 1966, Ser. No. 600,099
9 Claims. (Cl. 297—355)

A positioning mechanism including a housing and a threaded rod disposed in the housing and extending out of the housing. A threaded nut is disposed in the housing and threadedly engages the rod. A spring is disposed between one end of the rod and the threaded nut to urge the rod into the housing. A sleeve-like member is rotatably supported in the housing and a plurality of discs are operatively connected to the sleeve-like member. A second plurality of discs are operatively connected to the nut and are disposed among the discs operatively attached to the sleeve-like member. The sleeve-like member has a plurality of teeth disposed about the circumference thereof and a control means comprising a latch flange normally engages the teeth to prevent rotation of the sleeve-like member. The spring urges the nut toward the sleeve-like member so that the discs are urged to-

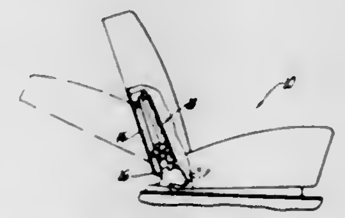

gether to prevent relative rotation between the sleeve-like member and the nut thus preventing relative movement between the rod and the housing. Upon disengagement of the latch flange, the sleeve-like member is free to rotate which allows the nut to rotate and move along the rod, thus allowing relative movement between the rod and the housing. Furthermore, when the rod is urged into the housing, such as by forcing the seat back to pivot from a reclined position toward an upright position, the nut is moved axially to move the discs apart so that the discs are free to rotate relative to one another whereby the nut may rotate on the rod as the sleeve-like member is prevented from rotating by the latch flange.

3,398,987
FOLDING AUTOMOBILE SEAT
Harry P. Lynn, Detroit, and Henry J. Tischler, Bloomfield Hills, Mich., assignors to Young Spring & Wire Corporation, Detroit, Mich., a corporation of Delaware
Filed Dec. 1, 1966, Ser. No. 598,334
13 Claims. (Cl. 297—379)

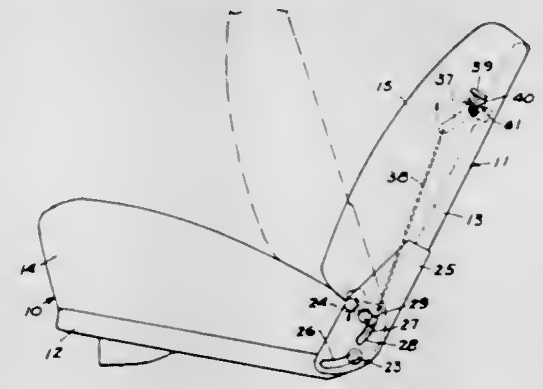

The folding automobile seat disclosed herein comprises a seat back and a seat base. A pair of vertically spaced studs are mounted on the seat base and a bracket is mounted on the seat back. The bracket has a pair of slots into which the studs extend to guide the folding action of the seat. A latch is provided on the seat back and engages one of the studs to lock the seat back in upright position.

3,398,988
CHURCH KNEELER DEVICE
Joseph J. Noe, 1952 Mayflower Ave., Bronx, N.Y. 10461
Filed Oct. 7, 1966, Ser. No. 585,062
8 Claims. (Cl. 297—426)

The present invention relates to a church kneeling bench mounting to provide a readily installable church

kneeler. There is provided a pair of brackets affixed to the inner sides of the bench legs to form a sheath, a pair of vertical supports which fit within the sheathes and

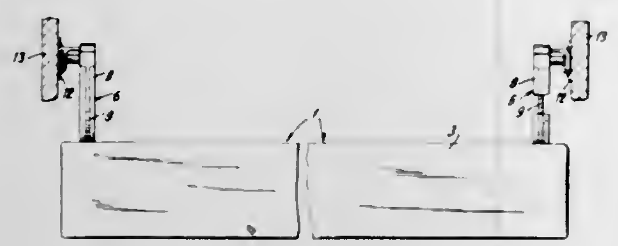

pivot means extending perpendicularly from the vertical supports inwardly between the supports and adapted to mate with and provide pivotal rotation to angle arm extensions affixed to the kneeler.

3,398,989
DIAMOND MILLING OR PLANER CUTTERS
Frank L. Christensen, Salt Lake City, Utah, assignor to Christensen Diamond Products Company, Salt Lake City, Utah, a corporation of Utah
Filed Nov. 14, 1966, Ser. No. 594,056
20 Claims. (Cl. 299—39)

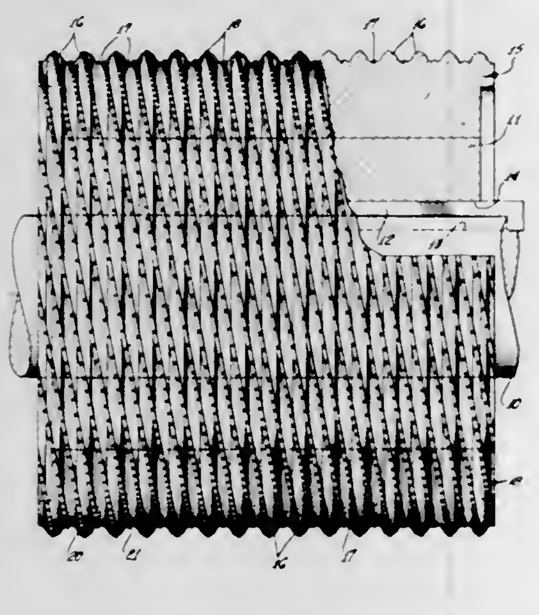

1. In a milling cutter: a body adapted to be rotated about an axis, said body comprising axially spaced circumferential ridges extending around its periphery and disposed normal to the body axis and providing axially spaced circumferential grooves between said ridges disposed normal to the body axis; and cutting elements disposed in a helical pattern in the periphery of said body over its ridges and grooves.

3,398,990
APPARATUS FOR CHANGING A DIRECTION OF FLOATED ARTICLES ON A FLOATING CONVEYOR
Mikio Matsumoto, Ashiya-shi, Japan, assignor to The Tsubakimoto Chain Mfg. Co., Ltd., and Nippon Sheet Glass Co., Ltd., both of Osaka, Japan
Filed May 17, 1967, Ser. No. 639,179
Claims priority, application Japan, June 16, 1966, 41/39,013
6 Claims. (Cl. 302—29)

The disclosed apparatus for changing the direction of floated articles on a floating conveyor has a pair of shafts spaced from each other and disposed vertically adjacent each other at a branching corner on a conveyor. Arms are mounted rotatably around said respective shafts and radially project therefrom. Other shafts are fitted at one end of said respective arms so as to move vertically and

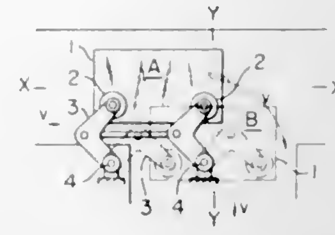

pads are mounted on the respective lowermost ends of said other shafts for contacting said loads so as to be able to change the direction of the loads on the conveyor.

3,398,991
AUTOMATIC VEHICLE CONTROL SYSTEM
Arthur M. Compton, Cincinnati, Ohio, assignor to Pullman Incorporated, Chicago, Ill., a corporation of Delaware
Filed Dec. 30, 1966, Ser. No. 606,341
10 Claims. (Cl. 303—7)

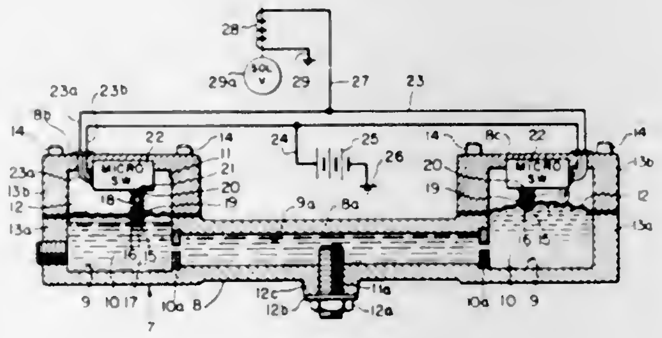

An automatic vehicle control system to prevent the vehicle from overturning by the provision of a centrifugal force responsive confined fluid medium placed or mounted transversely at the front of the vehicle and as low as possible which pressure responsive fluid at the danger point actuates a diaphragm controlled micro-switch sensor which in turn through the electrical control line operates a solenoid actuated air valve for applying air pressure to the brake chambers of a vehicle such as a trailer attached to a tractor for slowing down or stopping the vehicle should it make too fast a movement on a sharp turn.

3,398,992
BRAKE CONTROL SYSTEM FOR HYDRAULIC BRAKES
Joseph C. Littmann, Grosse Pointe Woods, Mich., assignor to Ferro Manufacturing Corporation, Detroit, Mich., a corporation of Michigan
Filed Mar. 30, 1966, Ser. No. 538,776
7 Claims. (Cl. 303—20)

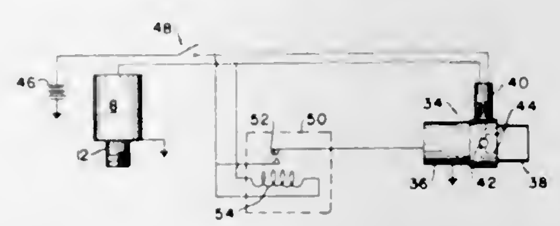

1. A brake control system for hydraulic brakes on a trailer connected to a towing vehicle or tractor having a hydraulic braking system independent of the trailer braking system, said brake control system comprising a source of hydraulic fluid under pressure, a pressure regulating valve controlling the pressure of fluid delivered from said source, a solenoid connected to said valve, a source of electrical current connected to the winding of said solenoid, and variable resistance means responsive to variations in the brake force applied to the tractor in series with said solenoid winding.

3,398,993
LOAD MODULATED COMBINED DYNAMIC AND FLUID PRESSURE BRAKE CONTROL SYSTEM FOR RAILWAY CARS
Ronald A. Sarbach, Wilmerding, and Robert D. Smith, Irwin, Pa., assignors to Westinghouse Air Brake Company, Wilmerding, Pa., a corporation of Pennsylvania
Filed Sept. 14, 1966, Ser. No. 579,313
13 Claims. (Cl. 303—20)

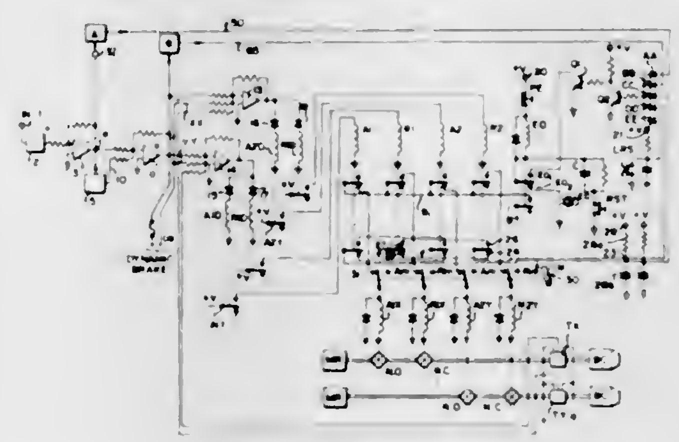

A vehicle braking system in which brake pressures are under continuously variable control by means of a feedback loop, in response to an error signal. The control is modified according to weight of the vehicle, and establishes pneumatic braking to the degree required to maintain proper braking level for the vehicle, as dynamic braking fails or fades off. Control is electronic and provision is made to apply full brake in response to various malfunctions of the electronic control circuitry.

3,398,994
ANTI-SKID WHEEL CONTROL SYSTEM FOR RAILWAY CARS
Robert D. Smith, Irwin, Pa., assignor to Westinghouse Air Brake Company, Wilmerding, Pa., a corporation of Pennsylvania
Filed Sept. 14, 1966, Ser. No. 579,417
13 Claims. (Cl. 303—21)

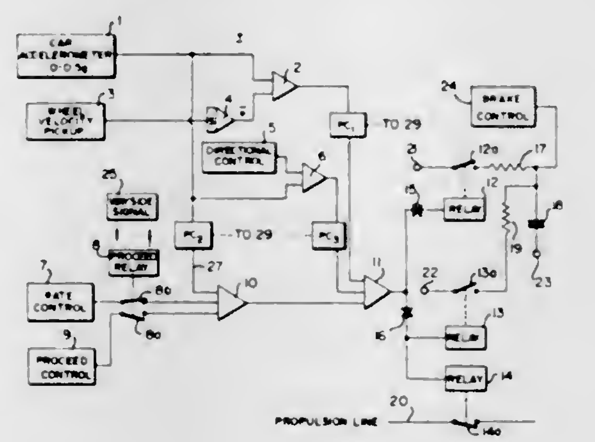

1. In a brake control system for a car,
a brake control for said car,
an accelerometer secured to said car and providing a first signal representing the acceleration of said car,
a rate control for providing a second signal indicative of a desired braking contour for said car,
means for comparing said first and second signals to derive an error signal,
means responsive to said error signal for controlling braking of said car so as to tend to maintain said braking control by controlling said brake control,
wherein said error signal has alternative characters,
a propulsion control,
means responsive to said error signal when of one of said alternative characters for actuating said propulsion control, and
means responsive to said error signal when of the other of said alternative characters for actuating said brake control.

3,398,995
ANTI-SKID CONTROL SYSTEM FOR RAILWAY VEHICLES
Gerard Martin, Villemomble, France, assignor to Compagnie des Freins et Signaux Westinghouse, Paris, France
Filed Oct. 10, 1966, Ser. No. 585,338
9 Claims. (Cl. 303—21)

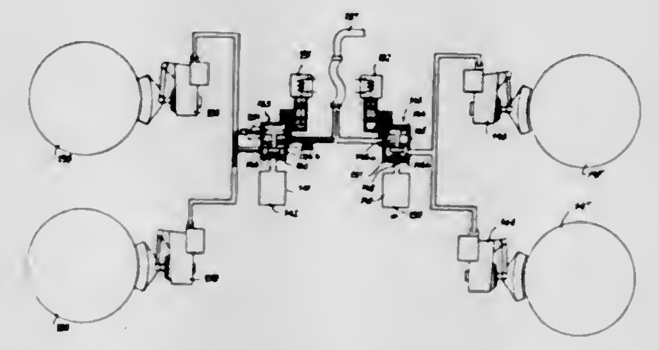

Apparatus for avoiding slipping or sliding of a vehicle wheel on its rolling surface. The apparatus comprises a novel combination of circuitry including a wheel-driven generator, a differentiator circuit, a discriminator circuit, a bi-stable alternator, a multivibrator and electro-magnet valves for controlling the admission or release of air to a vehicle brake cylinder in accordance with a variation in rate of wheel speed change with respect to a first uniform amplitude of reference during deceleration and with respect to a second uniform amplitude of reference during acceleration.

3,398,996
PIVOTED SHOE BEARING
Josef Wucherer, Zurich, Switzerland, assignor to Escher Wyss Aktiengesellschaft, Zurich, Switzerland, a corporation of Switzerland
Filed Aug. 5, 1965, Ser. No. 477,509
Claims priority, application Switzerland, Aug. 19, 1964, 10,861/64
12 Claims. (Cl. 308—2)

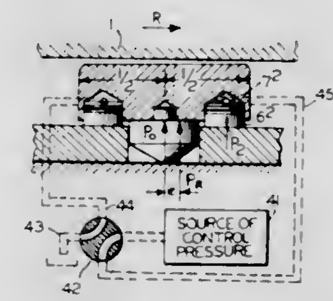

This disclosure relates to a bearing comprising two bearing members which are reversibly movable relatively

to one another and pivoted bearing shoes mounted on one of said bearing members so as to form a tapered lubricant containing bearing gap with the other member. A servo operated means is provided to control tilting movement of the shoes. The operating characteristics of the bearing can thus be made uniform despite changes in the direction of rotation.

3,398,997
PIVOTED SHOE BEARING
Josef Wucherer, Zurich, Switzerland, assignor to Escher Wyss Aktiengesellschaft, Zurich, Switzerland, a corporation of Switzerland
Filed Aug. 20, 1965, Ser. No. 481,274
Claims priority, application Switzerland, Oct. 9, 1964, 13,150/64
5 Claims. (Cl. 308—2)

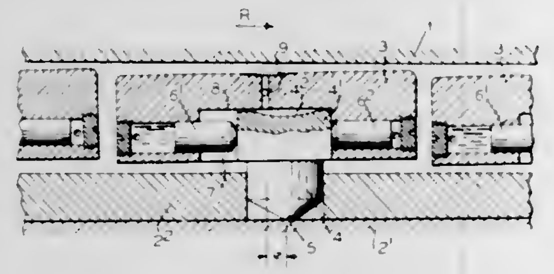

A pivoted shoe bearing including two relatively movable members, bearing shoes carried on one of the members by means of a support pivoted on that member, the shoes forming tapered lubricant-filled bearing gaps with the other members and shoes being displaceable relatively to the support in the direction of relative movement so the gap tapers in the direction of the relative movement and the taper is maintained at an optimum value.

3,398,998
BEARING UNITS
Frank Burnett, Costa Mesa, Calif., assignor, by mesne assignments, to Lear Siegler, Inc., Santa Monica, Calif., a corporation of Delaware
Filed Apr. 5, 1966, Ser. No. 540,249
Claims priority, application Great Britain, Apr. 8, 1965, 15,041/65
1 Claim. (Cl. 308—3)

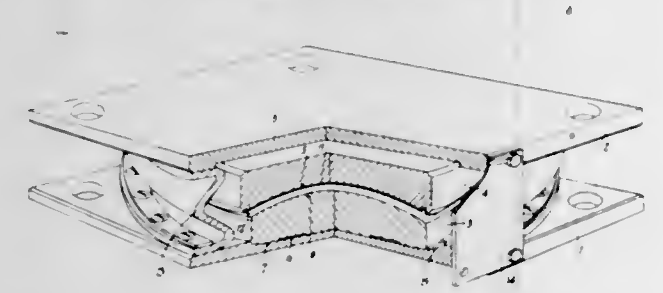

A structural bearing unit for use in bridge and other constructions to accommodate movement between structural members. A pair of blocks having coacting spherical bearing surfaces are recessed in upper and lower load supporting plates to prevent linear movement of the plates relative to one another while permitting annular movement thereof.

3,398,999
LINEAR MOTION BALL BEARING ASSEMBLY
Robert M. Halvorsen, Allen Park, Mich., assignor to Ex-Cell-O Corporation
Filed Aug. 15, 1966, Ser. No. 572,300
11 Claims. (Cl. 308—6)

A linear motion apparatus having a unitary ball bearing module. The module includes a ball bearing block with a pair of endless path raceways and ball bearings in said raceways adapted for recirculating movement. The retaining means has a top opening for insertion of

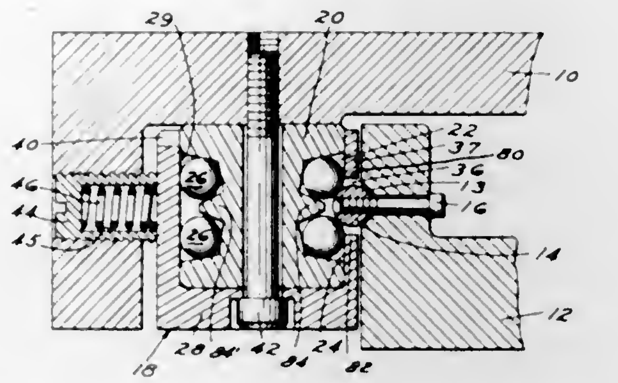

the bearing block and further includes a frontal wall slotted opening adapted to provide contact of said ball bearings on a track rod.

3,399,000
HYDRODYNAMIC BEARINGS
Gerrit Remmers, Emmasingel, Eindhoven, Netherlands, assignor to North American Philips Co., Inc., New York, N.Y., a corporation of Delaware
Filed Sept. 27, 1966, Ser. No. 582,315
Claims priority, application Netherlands, Oct. 5, 1965, 6512869
6 Claims. (Cl. 308—9)

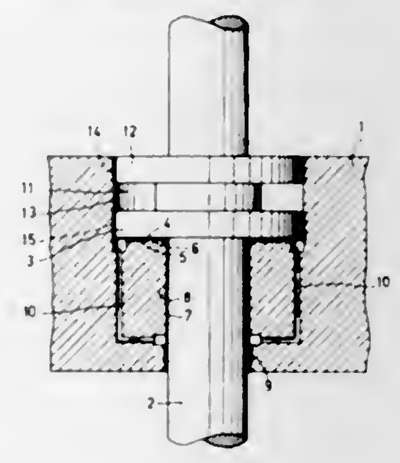

1. A hydrodynamic bearing comprising a rotatable and a stationary bearing member, one of the cooperating supporting surfaces of the bearing being provided with a spiral groove pattern of small depth which, on rotation of the rotatable bearing member, urges the lubricant from the entrance side to the exit side of the bearing gap, characterized in that the rotatable bearing member comprises a storage space for the lubricant, said storage space being bounded by a wall of the stationary bearing member, transport grooves for the lubricant being provided in one of the surfaces of the stationary and the rotatable bearing member facing one another on the side of the storage space facing the cooperating supporting surfaces of the bearing, said grooves having a transporting effect in the direction of the cooperating supporting surfaces and debouching in the proximity of the entrance side of the spiral groove pattern.

3,399,001
CONICAL HYDROSTATIC FLOATING BEARING
William D. Whitaker, Los Alamitos, Calif., assignor to Aerojet-General Corporation, El Monte, Calif., a corporation of Ohio
Filed Dec. 16, 1966, Ser. No. 602,366
15 Claims. (Cl. 308—9)

The invention disclosed herein relates to hydrostatic bearings conical in nature and interfitted with means for

so distributing the fluid medium therethrough that the rotor element floats in the fluid above the stator element

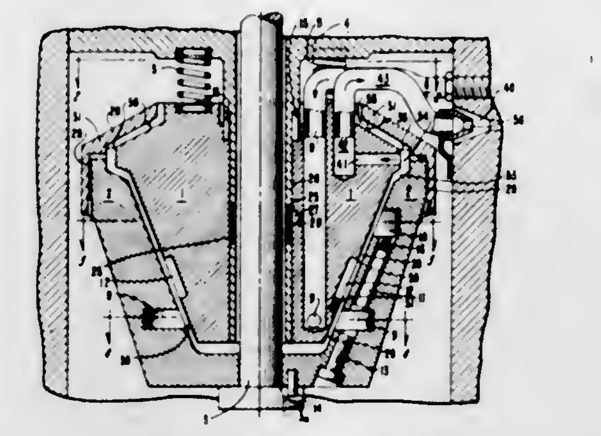

and the fluid pressures are adjusted against loading variations so as to support both axial and radial loads to provide reliable long-term, high-speed operation thereof.

3,399,002
ELECTROSTATIC SUPPORT SYSTEM
James L. Atkinson, La Mirada, Calif., assignor to North American Rockwell Corporation, a corporation of Delaware
Filed Feb. 16, 1966, Ser. No. 527,840
10 Claims. (Cl. 308—10)

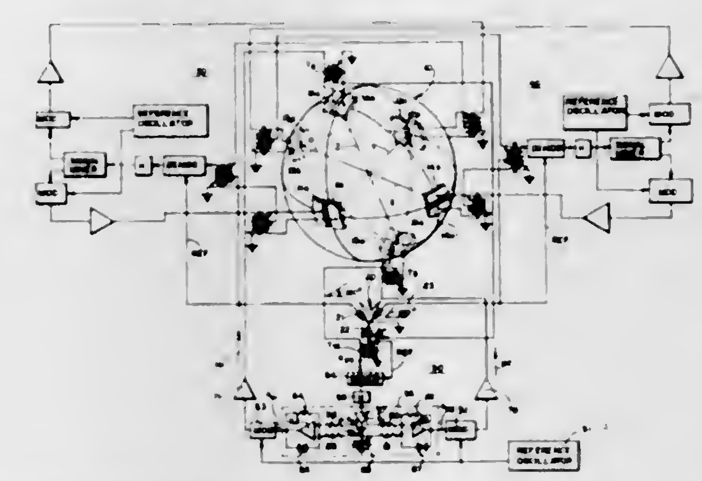

1. An electrostatic support system for supporting a member between pairs of electrodes comprising in combination:

electrostatic support means establishing an A.C. potential between said member and said electrodes;

sensing means providing an A.C. position signal which is modulated as a function of the displacement of said member with respect to said electrodes;

a demodulator demodulating said position signal providing a D.C. signal having a polarity and amplitude indicative of the displacement of said member with respect to said electrodes; and

a signal mixer means receiving as an input said D.C. signal and providing to said electrodes a signal that is a first function of displacement when said displacement is below a predetermined value and providing a signal that is a second function of displacement when said displacement is above said predetermined value.

3,399,003
DEVICE RELATING TO JOURNALLING OF IDLER SHEAVES, ROLLERS OR THE LIKE, PARTICULARLY IDLER SHEAVE GUIDES IN ROLLING MILLS
Elis Jansson, Hagfors, Sweden, assignor to Uddeholms Aktiebolag, Uddeholm, Sweden, a joint-stock company of Sweden
Filed Dec. 15, 1965, Ser. No. 514,061
8 Claims. (Cl. 308—18)

1. A sheave bearing assembly comprising a sheave having a central bore formed therein, an annular stationary groove formed in the central portion of the sheave and extending radially outward from said bore, an annular spacing ring engaged in said annular groove and projecting radially inwardly therefrom, a pair of anti-friction bearings within said bore, one on either side of said spacing ring, each of said anti-friction bearings including

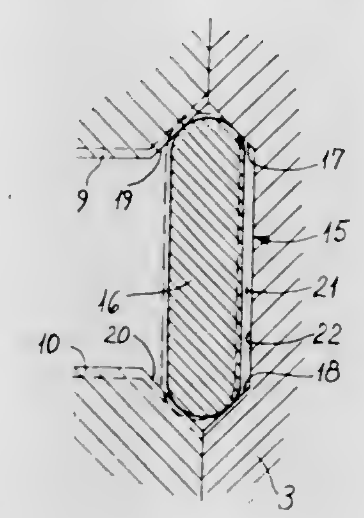

inner and outer race members, the inner shoulder of each outer race member abutting against said spacing ring, and said annular groove and spacing ring being so dimensioned as to accurately align said anti-friction bearings with respect to said sheave when the inner shoulders of said outer race members are in contact with said spacing ring.

3,399,004
ANTIFRICTION BEARING WITH CYLINDRICAL ROLLERS
Andreas Rohde, Ulm-Grimmelfingen, Karl-Albert Eckstein, Herzogenaurach, and Gunther Schumann, Nurnberg, Germany, assignors to Industriewerk Schaeffler OHG, Herzogenaurach, Germany, a corporation of Germany
Filed July 22, 1966, Ser. No. 567,300
Claims priority, application Germany, Sept. 10, 1965, J 28,968
11 Claims. (Cl. 308—35)

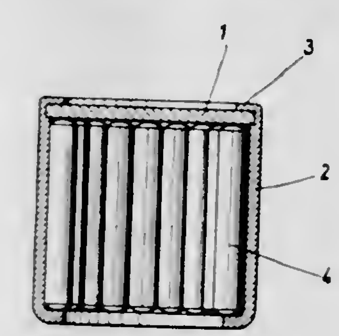

An antifriction bearing comprised of a drawn outer race, cylindrical rollers disposed thereon and a separately made base against which a shaft can abut to receive axial forces, the said base being thicker than the race to accommodate axial forces and being securely fixed in the outer race.

3,399,005
JOURNAL BOX LID SEAL
Robert Weis MacDonnell, Crete, Ill., assignor to Unity Railway Supply Co., Inc., a corporation of Illinois
Filed Jan. 30, 1967, Ser. No. 612,525
15 Claims. (Cl. 308—44)

A journal box lid seal of one piece rubber-like mate-

rial in the shape of a rectangular frame and having corner pockets engageable on the lid corners to seal the

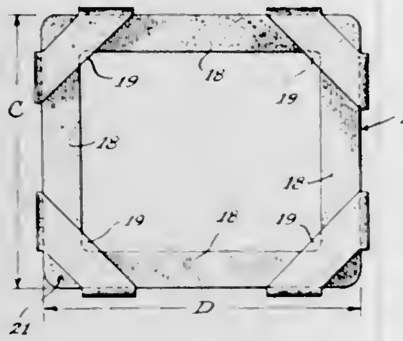

frame. The seal frame is slightly smaller than the lid to be stretch mounted on the lid.

3,399,006
VARIABLE HEIGHT CENTRAL BEARING
James J. Reece, Caseyville, Ill., and Thomas C. Barton, Ardmore, Pa., assignors to General Steel Industries, Inc., Granite City, Ill., a corporation of Delaware
Filed Sept. 6, 1966, Ser. No. 577,342
7 Claims. (Cl. 308—137)

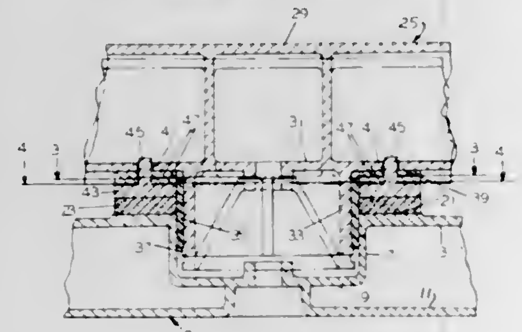

1. In a central bearing for railway vehicles, a top member, a bottom member, one of said members being formed with a cylindrical wall recess and the other of said members being formed with a cylindrical wall projection pivotally received in said recess, opposing horizontal surfaces on said members surrounding said projection and recess therein, an annular plate surrounding said recess and projection, and means retaining said plate against rotation relative to one of said members while accommodating substantial vertical movement between said plate and said one member whereby to permit the insertion therebetween of shims as desired.

3,399,007
SPIRAL GROOVE BEARING
Gerrit Remmers, Eindhoven, and Henri Tepe, Drachten, Netherlands, assignors to North American Philips Company, Inc., New York, N.Y., a corporation of Delaware
Filed July 12, 1966, Ser. No. 564,634
Claims priority, application Netherlands, July 16, 1965, 6509207
4 Claims. (Cl. 308—172)

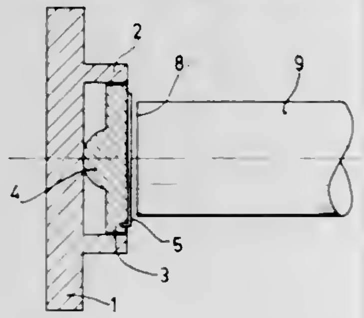

A spiral groove axial bearing for a rotatable shaft comprising a supporting member movably held in a base member and a plate member attached to the supporting member and being provided on its exposed surface with a plurality of radially arranged shallow uninterrupted grooves. The plate may be held to the supporting member by tags formed at the periphery of the plate or may be welded, soldered or glued into position.

3,399,008
ROLLER CAGE ASSEMBLY
Ronald J. Farrell, Bremen, and Fred Lannert, South Bend, Ind., and Dean A. Balsley, Philadelphia, Pa., assignors to SKF Industries, Inc., King of Prussia, Pa., a corporation of Delaware
Filed June 15, 1966, Ser. No. 557,654
8 Claims. (Cl. 308—217)

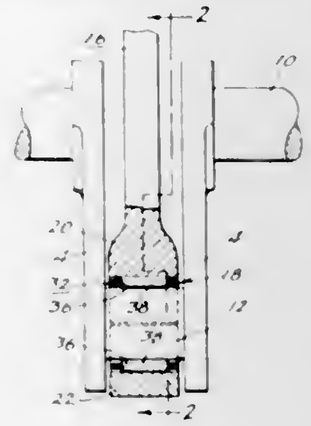

A roller cage assembly comprising a split annulus retainer made of a flexible resilient material such as a polyamide or fluorocarbon resin having a plurality of circumferentially spaced openings defining pockets for rolling elements such as rollers. A section of the retainer between adjacent pockets diametrically opposed from the terminal ends is enlarged to permit localized heating at this section and bending of the retainer to facilitate spreading the terminal ends apart so that it may be applied to a shaft member or the like, for example a crankshaft.

3,399,009
ROD CASE
Herbert J. Slade, 106 E. Olive St., Prospect Heights, Ill. 60070
Filed Dec. 22, 1966, Ser. No. 603,877
7 Claims. (Cl. 312—244)

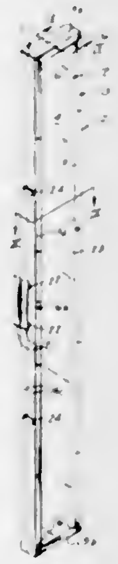

A piece of luggage providing a carrying and display case for compactly holding elongated rod members such as fishing rods, bows and arrows, cues and the like and formed from conventional extruded metal or plastic strips providing a frame and sheet-like panels anchored to the frame. In one embodiment, the case has two hinged together longitudinal sections, one or both of which may be provided with rod retaining fasteners. In a second embodiment, the case is in the form of an end opening sleeve which slidably receives a tray carrying the rods.

3,399,010
FOCUSING DEVICE
Berthold Böhmel, Konigsbronn, Wurttemberg, and Joachim Hornschu, Oberkochen, Wurttemberg, Germany, assignors to Carl Zeiss-Stiftung, doing business as Carl Zeiss Heidenheim (Brenz), Wurttemberg, Germany, a corporation of Germany
Filed Sept. 17, 1965, Ser. No. 487,980
Claims priority, application Germany, Sept. 25, 1964, Z 11,090
4 Claims. (Cl. 350—47)

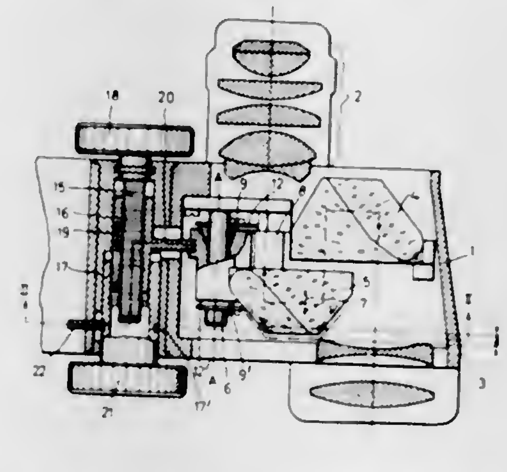

A focusing device for a binocular telescope in which in addition to the eyepieces and the objective lenses two Porro prisms are employed in each half of the binocular. One Porro prism is fixedly mounted and the other is adjustably mounted, firstly along a fixed guide post by means of a prism carrier which has mounted thereon two axially spaced conical guide sleeves which extend into oppositely arranged conical sockets in said prism carrier and slidably engage the guide post. Leaf springs attached to the prism carrier engage the guide sleeves and urge the same into the conical sockets.

Secondly, the prism carrier by means of an adjustable arm is adjustable about the axis of the guide post.

3,399,011
ARRANGEMENT FORMING SELECTIVELY A CLOSING CAP AND A SUNSHADE FOR AN OBJECTIVE
Wilfred Heiniger, Yverdon, Vaud, Switzerland, assignor to Paillard S.A., Vaud, Switzerland, a corporation of Switzerland
Filed Apr. 23, 1965, Ser. No. 450,304
Claims priority, application Switzerland, Apr. 29, 1964, 5,613/64
5 Claims. (Cl. 350—60)

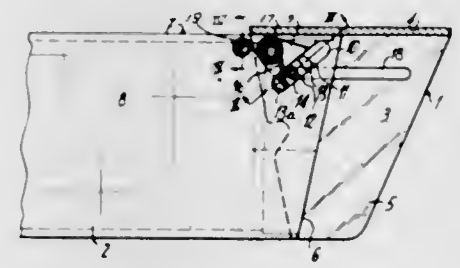

A movable member for use with a camera objective whereby the operator may selectively change the member from a cap-closure, to a sunshade, to an inoperative position by means of a pivotal mounting including two pairs of elongated recesses or cut-outs disposed obliquely with respect to one another.

3,399,012
OPTICAL TRANSMISSION LINE FOR GUIDING AN OPTICAL BEAM
Charles J. Peters, Wayland, Mass., assignor to Sylvania Electric Products Inc., a corporation of Delaware
Filed Jan. 31, 1964, Ser. No. 341,566
9 Claims. (Cl. 350—96)

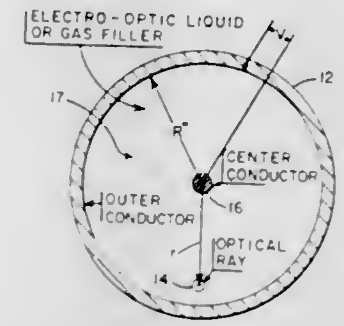

An optical transmission line in which an electro-optic fluid contained within a hollow tube is employed to guide a light beam through said tube. The electro-optic fluid is energized via an applied field to vary its refractive index from a maximum value at the axis of the tube to decreasing values toward the periphery of the tube. A light beam travelling within the and along the axis of the tube which tends to deviate from the center line of the tube is refracted toward the region of higher refractive index and thus is guided along the central region of the tube. The fluid can be gaseous or liquid and its index of refraction can be varied by use of the Kerr, Zeeman or Stark effects or by varying the population density of molecular oscillators. The energizing field is chosen according to the physical effect employed and can be applied by several different means such as a coaxial line including the hollow tube, a conductor pair within the tube or conductors axially disposed around the tube.

3,399,013
ULTRASONIC SCANNING CELL
Herbert G. Aas, East Hartford, and Robert K. Erf, Glastonbury, Conn., assignors to United Aircraft Corporation, East Hartford, Conn., a corporation of Delaware
Filed Oct. 28, 1964, Ser. No. 407,082
7 Claims. (Cl. 350—161)

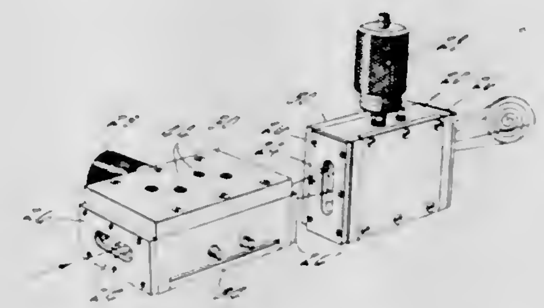

An ultrasonic cell for optically deflecting a light beam, and comprising an enclosed chamber containing a light transparent medium and a transducer for generating a standing acoustical wave in the medium.

3,399,014
ZOOM TYPE LENS SYSTEM FOR MICROPROJECTORS HAVING CONSTANT BRIGHTNESS OF IMAGE
John V. Butterfield, Greece, and Harold E. Rosenberger, Brighton, N.Y., assignors to Bausch & Lomb Incorporated, Rochester, N.Y., a corporation of New York
Filed Mar. 22, 1965, Ser. No. 441,515
2 Claims. (Cl. 350—184)

A zoom type of lens system for a microprojector wherein the aperture stop of the system is located near the object on a glass body; said system consisting of a posi-

tive and a negative group, each of which is movable relative to each other and relative to an object surface to

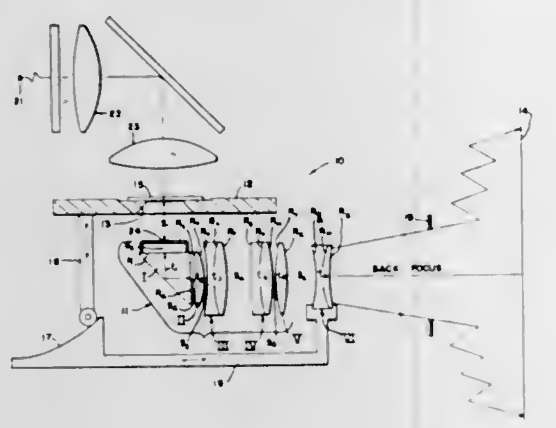

vary the magnification of the image formed by the system without changing its brightness.

3,399,015
MOUNTING MECHANISM FOR ZOOM MAGNIFIER

Robert D. Jacobs, Livonia, N.Y., assignor to Bausch & Lomb Incorporated, Rochester, N.Y., a corporation of New York
Filed May 13, 1965, Ser. No. 455,374
5 Claims. (Cl. 350—187)

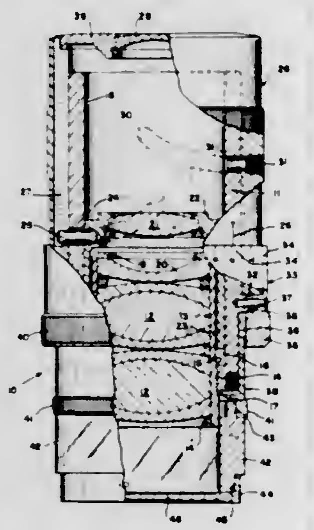

1. The combination in a mounting mechanism for a zoom magnifier having an objective lens group and an optically aligned zoom lens system of
- a body tube,
- a front lens cell located near the object end of the magnifier for mounting said objective lens group, said cell being spaced away from the inner surface of said tube to form an extended recess therebetween,
- means formed cooperatively on the forward end of the body tube and on the front part of said lens cell for securing the cell in the tube,
- means formed in the rear part of said front lens cell for securing a stationary lens member of said zoom lens system therein,
- an intermediate lens cell wherein a movable lens member of said system is secured, said cell having an elongated annular sleeve formed on the front side thereof which slidably fits the inner surface of the body tube and operates freely within said extended recess,
- a rear lens cell wherein a second movable lens member of said system is secured,
- an actuating sleeve slidably mounted on the rear exterior surface of said body tube and projecting rearwardly therebeyond,
- means fixing said rear lens cell in the rear end of said actuating sleeve so that it moves therewith,
- means operatively forming a longitudinal slot in said inner surface of said actuating sleeve,
- means forming a first curved helical cam slot in the body tube crossing said longitudinal slot near said intermediate lens cell,
- an actuating pin anchored in the intermediate lens cell and extending radially through said first curved helical slot and slidably engaged within said longitudinal slot,
- a pair of non-linear parallel cam surfaces defining a second curved cam slot which is formed in the rear part of said body tube, and
- a second actuating pin fixed in said actuating sleeve and extending into engagement with said second curved slot
- whereby rotation of the actuating sleeve causes the sleeve and the rear lens cell to move axially of the body tube and simultaneously causes the intermediate lens cell to move because of its connection with the longitudinal slot.

3,399,016
METALLURGICAL MICROSCOPE OBJECTIVE

Ralph B. Young, Henrietta, N.Y., assignor to Bausch & Lomb Incorporated, Rochester, N.Y., a corporation of New York
Filed Sept. 17, 1965, Ser. No. 488,112
2 Claims. (Cl. 350—214)

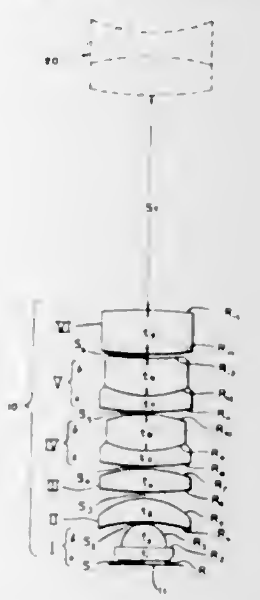

1. A microscope semi-objective having a combined positive power of 100× and numerical aperture of 1.25 when used with a rearwardly aligned corrector lens of 5× magnification, said semi-objective comprising
- a compound front lens member designated I and consisting of a plano parallel plate I*a* which lies in contact with a rear plano convex lens element I*b*, the axial thicknesses of elements I*a* and I*b* being designated respectively t_1 and t_2, the lens member I being spaced at an axial distance designated S_1 rearwardly from an object surface, ,
- a concavo-convex singlet lens member designated II which is spaced rearwardly from member I at an axial distance designated S_2 and has an axial thickness designated t_3,
- a second singlet lens member designated III of double convex form which is axially spaced from lens member II at a distance designated S_3,
- a positive doublet lens member designated IV which is spaced rearwardly from member III by a distance designated S_4, member IV being comprised of a front negative meniscus lens element denoted IV*a* which lies in contact with a rear double-convex lens element denoted IV*b*, the axial thicknesses of the elements IV*a* and IV*b* being designated t_5 and t_6 respectively,

- a negative doublet lens member designated V which is spaced from member IV at an axial distance designated S_5 and is comprised of a negative meniscus lens element designated V*a* which lies in contact with a rear positive meniscus element which is designated V*b*, the axial thicknesses of the elements V*a* and V*b* being designated t_7 and t_8 respectively,
- and in rearmost position a singlet lens member designated VI of double convex form is spaced at an axial distance from member V which is designated S_6, the axial thickness thereof being denoted t_9,
- the specific values for the lens parameters of said semi-objective being given substantially in the table herebelow wherein F_I to F_{VI} represent the equivalent focal lengths of lens members I to VI respectively, and their lens elements F_{Ia}, F_{Ib}, F_{IVa}, F_{IVb}, F_{Va}, F_{Vb}, the minus (−) sign denoting negative focal lengths, the table further including the specific values for the aforesaid lens thicknesses t_1 to t_9 and spaces S_1 to S_7 said values being given in terms of F which is the combined focal length of said semi-objective and said corrector lens, the specific absolute values furthermore being given for the refractive indices $n_D(Ia)$ to $n_D(VI)$ and the Abbe numbers $\nu(Ia)$ to $\nu(VI)$,

$F_I=1.7404F$	$S_3=.2444F$
$F_{II}=7.2228F$	$S_4=.0488F$
$F_{III}=9.2654F$	$S_5=.0488F$
$F_{IV}=46.5088F$	$S_6=.0977F$
$-F_V=25.6002F$	$S_7=9.6773F$
$F_{VI}=17.4530F$	$n_D(Ia)=1.670$
$F_{Ia}=\infty$	$n_D(Ib)=1.620$
$F_{Ib}=1.7404F$	$n_D(II)=1.620$
$-F_{IVa}=7.9877F$	$n_D(III)=1.514$
$F_{IVb}=6.9814F$	$n_D(IVa)=1.720$
$-F_{Va}=7.7742F$	$n_D(IVb)=1.514$
$F_{Vb}=10.6031F$	$n_D(Va)=1.720$
$t_1=.5523F$	$n_D(Vb)=1.514$
$t_2=1.0410F$	$n_D(VI)=1.514$
$t_3=1.0753F$	$\nu(Ia)=47.2$
$t_4=1.1740F$	$\nu(Ib)=60.3$
$t_5=.7331F$	$\nu(II)=60.3$
$t_6=1.7106F$	$\nu(III)=70.0$
$t_7=.7331F$	$\nu(IVa)=29.3$
$t_8=1.7106F$	$\nu(IVb)=70.0$
$t_9=2.1016F$	$\nu(Va)=29.3$
$S_1=.1417F$	$\nu(Vb)=70.0$
$S_2=.0122F$	$\nu(VI)=70.0$

3,399,017
FLAT FIELD METALLURGICAL MICROSCOPE OBJECTIVE

Duane E. Judd, Greece, N.Y., assignor to Bausch & Lomb Incorporated, Rochester, N.Y., a corporation of New York
Filed Aug. 25, 1965, Ser. No. 482,444
2 Claims. (Cl. 350—224)

1. A microscope semi-objective having a combined positive power of 10× when used with a rearwardly aligned negative corrector lens of 5× magnification, said semi-objective comprising
- a front doublet lens designated I consisting of a front double convex element designated I*a* and a rear double concave element designated I*b* in contact therewith, said front doublet lens having an equivalent focal length which is designated F_I, said front doublet lens I being located at an axial distance S_1 rearwardly from the object plane of said objective,
- a second doublet lens designated II consisting of a front positive meniscus element designated II*a* and a rear negative meniscus element designated II*b* in contact therewith, said second doublet lens being spaced rearwardly of lens I at an axial distance designated S_2 and having an equivalent focal length designated F_{II}, and
- a third doublet lens designated III consisting of a front negative meniscus element designated III*a* and a rear double convex element designated III*b* lying in contact therewith, said third lens III being spaced from lens II at an axial distance designated S_3 and having an equivalent focal length designated F_{III},

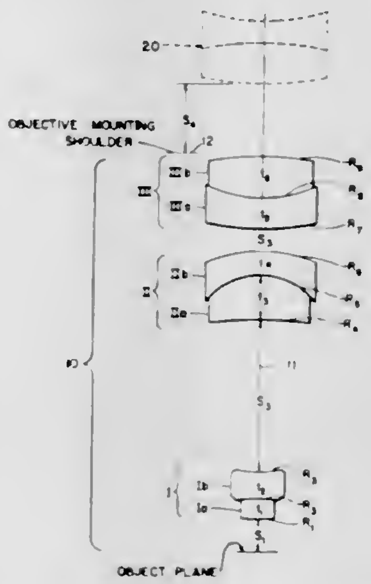

the specific values for the constructional data for said semi-objective being given substantially herebelow for the equivalent focal lengths F_I to F_{III}, the successive axial thicknesses of the successive lens elements being designated t_1 to t_6, and the aforesaid air spaces S_1 to S_3,

$F_I=1.578F$	$t_1=.1054F$
$F_{II}=2.010F$	$t_2=.2740F$
$F_{III}=1.969F$	$t_3=.2117F$
$F_{Ia}=.432F$	$t_4=.1110F$
$-F_{Ib}=.462F$	$t_5=.1580F$
$F_{IIa}=.792F$	$t_6=.1975F$
$-F_{IIb}=1.513F$	$S_1=.1580F$
$-F_{IIIa}=1.567F$	$S_2=.6070F$
$F_{IIIb}=.855F$	$S_3=.1054F$

wherein F designates the equivalent focal length of the semi-objective and corrector lens together, and further characterized by the refractive indices $n_D(Ia)$, $n_D(Ib)$, $n_D(IIa)$, $n_D(IIb)$, $n_D(IIIa)$, $n_D(IIIb)$ respectively of the successive lens elements I*a* to III*b*, and Abbe numbers of the glasses from which said elements are formed being designated $\nu(Ia)$, $\nu(Ib)$, $\nu(IIa)$, $\nu(IIb)$, $\nu(IIIa)$, $\nu(IIIb)$ respectively, the specific absolute values thereof being given substantially in the table of mathematical statements herebelow,

$n_D(Ia)=1.751$	$(Ia)=27.8$
$n_D(Ib)=1.514$	$(Ib)=70.0$
$n_D(IIa)=1.514$	$(IIa)=70.0$
$n_D(IIb)=1.720$	$(IIb)=29.3$
$n_D(IIIa)=1.689$	$(IIIa)=30.9$
$n_D(IIIb)=1.541$	$(IIIb)=59.9$

3,399,018
ROLLED EYEGLASS LENS RIM CONSTRUCTION

Conrad L. Leblanc, Leominster, Mass., assignor to Foster Grant Co., Inc., Leominster, Mass., a corporation of Delaware
Filed Oct. 2, 1963, Ser. No. 313,271
4 Claims. (Cl. 351—154)

This disclosure pertains generally to a pair of eyeglasses such as those of the prescription or sunglass type.

A frame blank is disclosed which is provided with a specially designed lip for rolling over the edges of the lenses after they have been inserted. It has been found that the design and construction of this lip must be of a particular configuration in order to result in a finished frame having a substantially smooth front and rear face.

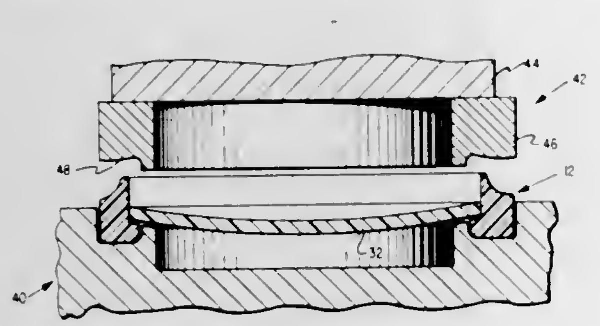

The lip must surround at least a portion of the lens seat and the outer side of the lip should have a finished portion which extends forwardly and outwardly of the lip's apex and merge with a substantially concave second portion of the outer side of the lip. The concave portion then merges with the rear face of the frame blank.

3,399,019
CARTRIDGE SAFETY MEANS FOR REFILLABLE PEN
Harald Karol Andreas Koelichen, Geretsried, Bavaria, Germany, assignor to Filler & Fiebig G.m.b.H., Geretsried, Bavaria, Germany
Filed Dec. 29, 1965, Ser. No. 517,326
Claims priority, application Germany, Jan. 5, 1965, F 44,887
18 Claims. (Cl. 401—134)

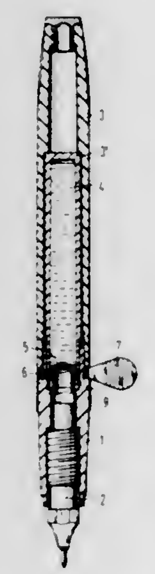

A pen having a liquid ink filled replaceable cartridge inserted therein; the cartridge having a seal adapted to be punctured or broken at an end thereof; the pen comprising a body which contains the cartridge and a head which includes the writing nib and a piercing means, such as a blade, for piercing the seal to permit ink to pass to the nib; a safety means consisting of a structure, such as a ring about the pen, mounted to cause the piercing means to be held separated from the seal; the ring, in one embodiment, having a weakened portion, and a manual gripping portion, whereby when the manual gripping portion is pulled, the weakened portion breaks and the safety means may be removed from the pen; and in another embodiment, the ring comprising a ring of wax or plastic which is crushed, and broken, and falls out of the pen when the pen body is forcibly moved or screwed into the pen head.

3,399,020
EYE COSMETIC APPLICATOR
Anita M. Margolis and Allan M. Margolis, both of 1429 W. Deodar St., Ontario, Calif. 91762
Filed Oct. 31, 1966, Ser. No. 590,577
2 Claims. (Cl. 401—135)

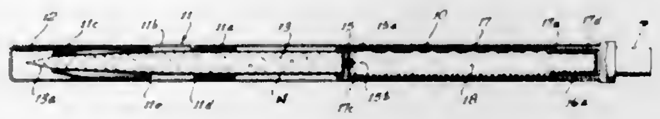

The present invention consists of a device by means of which cosmetics, such as eye liner material, may be applied to the eye to enhance its beauty. The device itself basically comprises a cartridge in which the cosmetic, in fluid form, is kept; a sturdy yet porous material, such as a compact felt material, that is tapered to a point for applying the cosmetic to the area of the eye; and various simple means for delivering the cosmetic to the porous applicator material.

3,399,021
HARD FIBER CORE PEN AND ITS CARTRIDGE
Hiroyuki Matsumoto, Tokyo, Japan, assignor to Dai Nihon Bungu Co., Ltd., Tokyo, Japan
Filed Sept. 1, 1965, Ser. No. 484,212
Claims priority, application Japan, Sept. 9, 1964, 39/51,820
7 Claims. (Cl. 401—199)

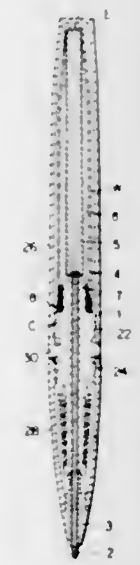

A capillary absorbent connector extends within an ink reservoir from the closed end of the reservoir to contact with a writing nib. The spacing between the lateral internal walls of the reservoir and the connector is made large to eliminate unwanted spontaneous ink feeding, while the connector maintains ink feeding in all attitudes of pen usage. This structure is provided in cartridge form for the replacement of exhausted ink supply.

3,399,022
ANNULAR BURNER APPARATUS PROVIDING BLUE-FLAME COMBUSTION OF DOMESTIC FUEL OIL
Frank W. Bailey, Wayne, N.J., assignor to Operation Oil Heat Associates, Inc., New York, N.Y.
Filed Jan. 23, 1967, Ser. No. 610,848
12 Claims. (Cl. 431—116)

An annular burner defines a relatively long recirculation path through which combustion gases circulate back to the inlet for intimate mixing with and dilution of the

unburned mixture as it enters the path for controlling the rate of burning to provide blue-flame combustion. The air-cooled wall means defining the recirculation path cool the combustion gases to promote blue-flame combustion, and an air-cooled axial duct cools the flaming gases which issue from the recirculation path along an outlet passageway extending substantially around the duct. The

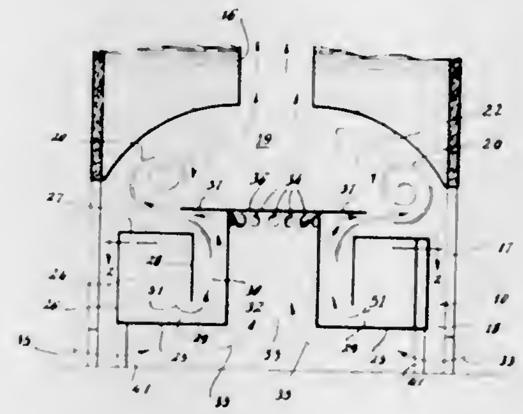

preheated air from the upper end of the duct is directed outwardly to mix with and complete blue-flame combustion of the flaming gases rising around the duct. A Coanda flow augmentation surface near the entry stabilize the pattern of the unburned mixture and promotes intimate mixing with and dilution by the recirculated combustion products.

3,399,023
GAS LIGHTER WITH ELECTRIC SPARK IGNITION
Hermann Remy, Dietzenbach-Steinberg, Germany, assignor to Rowenta Metallwarenfabrik G.m.b.H., Offenbach am Main, Germany, a firm of Germany
Filed Mar. 18, 1966, Ser. No. 535,542
Claims priority, application Germany, Mar. 26, 1965, R 40,222
9 Claims. (Cl. 431—255)

A gas-fueled lighter with electric spark ignition system in which operation of an actuating member opens the fuel valve of the lighter for the escape of the gas through the burner assembly and also causes a spark discharge igniting the escaping gas. The burner assembly and the ignition assembly are mounted on a chassis encased by a cover. Shielding means within the cover shield the air space surrounding the burner against an air blast as caused by

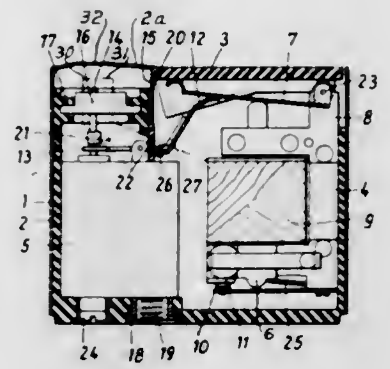

operation of the actuating member thereby preventing extinction of the flame by said air blast.

3,399,024
BURNER CONSTRUCTION AND THE LIKE
Charles David Branson, Greensburg, Pa., assignor to Robertshaw Controls Company, Richmond, Va., a corporation of Delaware
Filed Aug. 9, 1966, Ser. No. 571,314
8 Claims. (Cl. 431—286)

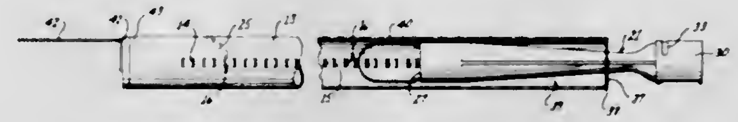

This disclosure relates to a tubular burner construction having two opposed rows of port means passing through the opposed sides of the tubular structure in aligned relation. A venturi tube means has its outlet end disposed in one end of the tubular burner construction intermediate the opposed ends of each row of port means and carries a U-shaped target-baffle means at the outlet end thereof so that at least part of the fuel air mixing in the venturi tube means will take place in the part of the tube means that is disposed in the tubular burner construction so that the overall size of the burner construction is relatively small.

CHEMICAL

3,399,025
PROCESS FOR DYEING THERMOPLASTIC STYRENE POLYMER GRANULES
Harold L. Nicholson, Murrysville, Pa., assignor to Koppers Company, Inc., a corporation of Delaware
Filed July 27, 1964, Ser. No. 385,416
10 Claims. (Cl. 8—4)

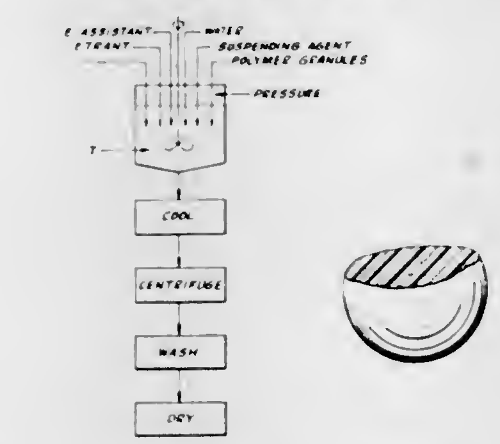

Styrene polymers are dyed by suspending the granules in aqueous medium and diffusing a water-insoluble, organic solvent-soluble dye into the granules by way of a penetrant under conditions of elevated temperature and pressure. The penetrant is a solvent for the dye and can also be a blowing agent for the polymer so that the polymer granules are both dyed and rendered expandable in the same operation.

3,399,026
PROCESS FOR THE PRODUCTION OF FAST ORANGE DYEINGS ON STRUCTURES OF AROMATIC POLYESTERS, ESPECIALLY OF POLYETHYLENE-TEREPHTHALATES
Wilhelm Happe, Schwalbach, Taunus, Germany, and Hermann Hoffmann, West Warwick, R.I., assignors to Farbwerke Hoechst Aktiengesellschaft vormals Meister Lucius & Bruning, Frankfurt am Main, Germany, a corporation of Germany
No Drawing. Filed Mar. 9, 1965, Ser. No. 438,401
Claims priority, application Germany, Mar. 18, 1964, F 42,358
6 Claims. (Cl. 8—25)

Process for dyeing aromatic polyesters orange with an

aqueous dispersion of a dyestuff mixture consisting of isomeric dyestuffs of the formulae

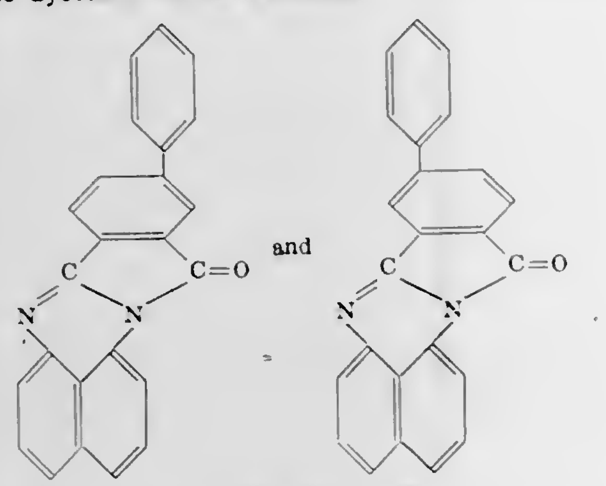

3,399,027
DYEING NICKEL CHELATE MODIFIED POLYOLEFIN WITH AZOMETHINE DYES
Gérald Siegrist, Rieben, and Walter Biedermann, Basel, Switzerland, assignors to J. R. Geigy A.G., Basel, Switzerland
No Drawing. Filed Aug. 15, 1963, Ser. No. 302,465
Claims priority, application Switzerland, Aug. 20, 1962, 9,930/62
4 Claims. (Cl. 8—31)

Shaped polyolefines which contain organic nickel chelate complexes as dye acceptors are dyed or printed by contacting shaped articles of such polyolefine material with fine dispersions, either in the form of solution or fine suspensions of certain metallizable azo or azomethine dyestuffs which are capable of taking part in metal complex formation.

3,399,028
DYEING POLYESTER FIBERS WITH 3'-HYDROXYQUINOPHTHALONES
Hugo Illy, Toms Rivers, N.J., assignor to Toms River Chemical Corporation, Toms River, N.J., a corporation of Delaware
No Drawing. Original application May 17, 1963, Ser. No. 281,359. Divided and this application Sept. 28, 1966, Ser. No. 615,274
8 Claims. (Cl. 8—55)

Polyester fibers and blends thereof with cotton are dyed or printed with 3,4,5,6 - tetrachloro - 3' - hydroxyquinopthalone or the B,4,5,6-tetrabromo analogue thereof in a dyebath containing naphthalene-2-sulfonic acid formaldehyde, sorbitol and water. Other analogues of these dyes containing one or two chlorine and bromine groups in the quinaledine nucleus are also shown.

3,399,029
PROCESS FOR HALOGENATING MOLTEN METALS
Peter A. Rubel, Lexington, Mass., assignor to Cabot Corporation, Boston, Mass., a corporation of Delaware
Filed Mar. 16, 1966, Ser. No. 534,716
8 Claims. (Cl. 23—93)

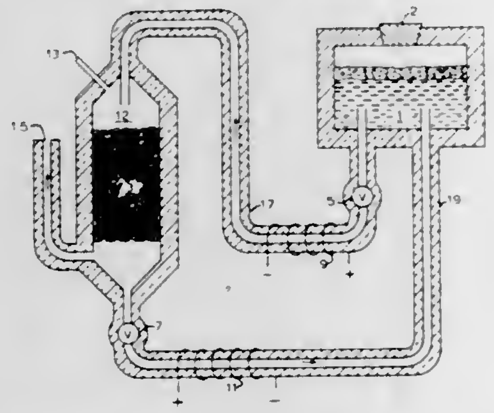

1. A process for producing metal halides which comprises providing as separate entities a molten metal reservoir containing a molten metal which forms a volatile metal halide and is a member of the group consisting of Groups II*b*, III*b* or IV of the Mendeleev periodic system, and a packed reaction chamber having a headspace at the top thereof, circulating molten metal from said reservoir through said reaction chamber and back into said reservoir, and introducing a halogen gas which is a member of the group consisting of bromine and chlorine into said headspace thereby causing molten metal and halogen gas to react within said reaction chamber to produce the corresponding metal halide.

3,399,030
PROCESS FOR SEPARATING STRONTIUM FROM FISSION PRODUCT SOLUTION BY FIXING ON ANTIMONIC ACID
Charles Aubertin, Bois Colombes, Jean Lefebvre, Bourg-la-Reine, Gerard Galaud, Courbevoie, and Jacques Prospert, Massy, France, assignors to Commissariat à l'Energie Atomique, Paris, France
No Drawing. Filed Dec. 21, 1966, Ser. No. 603,162
Claims priority, application France, Jan. 5, 1966, 44,937; Nov. 30, 1966, 85,696
5 Claims. (Cl. 23—102)

Strontium is obtained from acid solutions of fission products by contacting the solution with antimonic acid and eluting the strontium fixed on the antimonic acid with a solution containing a cation of lead or silver.

3,399,031
METHOD OF CARRYING OUT CHEMICAL REACTIONS AND PRODUCT THEREOF
William W. McCarthy, New Canaan, Conn., assignor to Sonic Engineering Corporation, a corporation of Connecticut
Filed Aug. 17, 1965, Ser. No. 480,379
12 Claims. (Cl. 23—107)

Chemical reaction between liquid reactants, one of which is normally a gas at atmospheric temperatures and pressures, is carried out by liquefying the gaseous reactant, combining the liquefied gaseous reactant with the other liquid reactant to form a composite thereof having the relative proportions of each required for the chemical reaction, the composite being confined in a pressure zone maintained at temperatures and pressures which preserve the liquefied state of the normally gaseous reactant, and then subjecting the composite to mixing energy of an intensity sufficient to generate cavitation in the composite, whereby the reaction rate and space-time yield of reaction product are greatly increased with minimization or elimination of the need for gas recycling.

3,399,032
METHOD OF PREPARING AMMONIUM PHOSPHATE SOLIDS
Donald C. Young, Fullerton, Calif., assignor to Union Oil Company of California, Los Angeles, Calif., a corporation of California
No Drawing. Continuation-in-part of application Ser. No. 183,964, Mar. 30, 1962, now Patent No. 3,241,946, dated Mar. 22, 1966. This application Feb. 21, 1966, Ser. No. 528,817
The portion of the term of the patent subsequent to July 17, 1979, has been disclaimed and dedicated to the Public
7 Claims. (Cl. 23—107)

The invention comprises the production of solid, nonhygroscopic ammonium phosphates from wet-process phosphoric acid and ammonia and involves the steps of concentrating the wet-process phosphoric acid by evaporative heating at atmospheric or subatmospheric pressure and introducing anhydrous ammonia into contact with the heated acid while maintaining the temperature and utilizing the exothermic heat of reaction for continuing the evaporative concentration of the acid. The concentration is continued until the acid has the property of forming clear ammonium phosphate solutions having pH values from 5.5 to 10. This property is achieved when a sufficient quantity of acyclic polyphosphoric acids are formed in the acid to prevent the precipitation of the metallic impurities contained therein. A typical treatment comprises heating wet-process phosphoric acid to a temperature of about 185° C. and thereafter introducing anhydrous ammonia while removing volatilized impurities.

3,399,033
CRYSTALLIZATION OF TUNGSTEN DISULFIDE FROM MOLTEN SLAGS
Joseph W. Town, Albany, Oreg., assignor to the United States of America as represented by the Secretary of the Interior
No Drawing. Filed Aug. 1, 1966, Ser. No. 569,795
10 Claims. (Cl. 23—134)

Crystalline tungsten disulfide is produced by smelting a mixture of sulfide-bearing material and tungsten-bearing material in the presence of silica and lime.

3,399,034
PROCESS FOR THE PREPARATION OF NITROSYL SULPHURIC ACID
Michailas Genas, Paris, and René Marcel Kern, Savigny-sur-Orge, France, assignors to Societe Aquitaine-Organico, Paris, France, a corporation of France
No Drawing. Filed Dec. 6, 1965, Ser. No. 512,021
9 Claims. (Cl. 23—139)

The present invention is directed to an improved process for the preparation of nitrosyl sulphuric acid. More specifically it relates to the preparation of nitrosyl sulphuric acid wherein sulphurous anhydride is reacted with nitric acid in a medium of sulphuric acid and in the presence of two initiators which are nitrosyl sulphuric acid and water.

3,399,035
PROCESS FOR THE RECOVERY OF BORIC ACID FROM THE OXIDATION MIXTURES OF LIQUID-PHASE OXIDATION OF HYDROCARBONS
Franz Broich and Horst Grasemann, Marl, Germany, assignors to Chemische Werke Hüls Aktiengesellschaft, Marl, Germany
No Drawing. Filed Jan. 26, 1965, Ser. No. 428,251
Claims priority, application Germany, Feb. 12, 1964, C 32,111
21 Claims. (Cl. 23—149)

In a process for the production of higher alcohols, such as cyclododecanol, by the oxidation of hydrocarbons in the presence of a boron compound, such as boric acid, the improvement of recovering the boron compound in sufficient purity for recycling to the oxidation step, by conducting an ester interchange reaction with a monovalent aliphatic alcohol of 1–4 carbon atoms, such as methyl alcohol, to form a borate, such as methyl borate, simultaneously distilling the resultant borate from the reaction mixture, and then saponifying the resultant distilled ester to form boric acid.

3,399,036
SULFUR TETRAFLUORIDE
Sidney Kleinberg and James F. Tompkins, Jr., Allentown, Pa., assignors to Air Products and Chemicals, Inc., Allentown, Pa., a corporation of Delaware
Filed Apr. 20, 1966, Ser. No. 543,856
8 Claims. (Cl. 23—205)

Molten sulfur and gaseous fluorine are reacted under conditions selected to form predominantly SF_4, by directing a stream of fluorine gas to contact with a bed of molten sulfur preheated to above 200° C. to effect exothermic reaction at 300–450° C.

3,399,037
METHODS AND SYSTEMS FOR DETERMINING THE SOLUTE CONCENTRATION OF DILUTE AQUEOUS SOLUTIONS
Edgar L. Eckfeldt, Ambler, Pa., assignor to Leeds & Northrup Company, a corporation of Pennsylvania
Filed Sept. 20, 1963, Ser. No. 310,310
20 Claims. (Cl. 23—230)

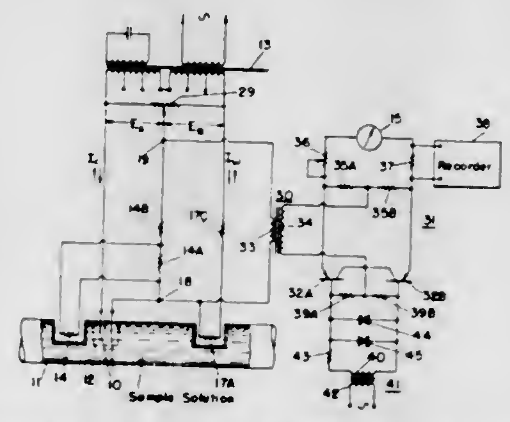

Determination of solute concentration of dilute aqueous solutions by measurement of conductivity, making use of the calculated ionization/temperature characteristic of theoretically pure water. Monitoring the salt concentration of an aqueous solution, using such determination.

3,399,038
APPARATUS FOR DETERMINING SULFUR CONTENT OF GASEOUS HYDROCARBONS
Jacques Maurice, Mourenx, Bernard Pflugfelder, Artix, Bernard Peyrot, Mourenx, and Colette Didelot, Pau, France, assignors to Societe Nationale des Petroles d'Aquitaine, Paris, France, a corporation of France
Filed Oct. 11, 1963, Ser. No. 315,438
Claims priority, application France, Oct. 11, 1962, 912,058
2 Claims. (Cl. 23—254)

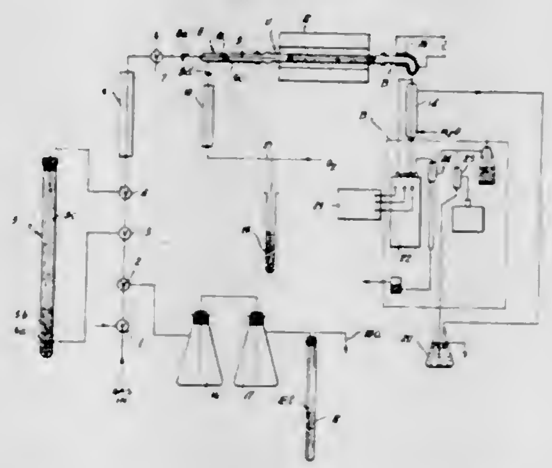

Process and apparatus for measuring the sulphur content of various hydrocarbon gases containing trace amounts up to 30 p.p.m. of sulphur. The process entails the comparison of the electroconductivity of an electrolyte containing absorbed therein an oxidized portion of the hydrocarbon gas with the electroconductivity of an electrolyte containing oxidized gases obtained by first removing the sulphur content from a second portion of said hydrocarbon gas, oxidizing the substantially sulphur free gas and absorbing the oxidized gas in said electrolyte. The conductivity differences indicate the sulphur content. The apparatus of the invention comprises a burner with a plurality of gas inlets, first regulated means for supplying oxidizing gas to said burner, second regulated means for supplying said gas stream to said burner, a chamber filled with packing which communicates with the outlet of said burner, heating means surrounding at least a portion of said chamber, cooling and sulphur dioxide absorption means communicating with

the exit of said chamber and a conductivity cell connected to said cooling and absorption unit for measuring the electrical conductivity of electrolyte.

3,399,039
FLAME IONIZATION DETECTOR
Earl M. Taft, Lafayette, Calif., assignor, by mesne assignments, to Varian Associates, Palo Alto, Calif., a corporation of California
Filed Mar. 22, 1965, Ser. No. 441,826
4 Claims. (Cl. 23—254)

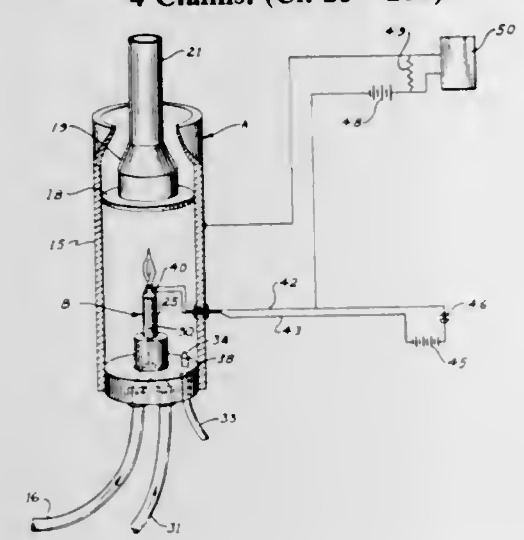

1. A detector for use in gas chromatography comprising an electrically conductive hollow housing, means to emit gas up into said housing, a flame burning candle formed of non-conductive material mounted within said housing, means supplying positive potential to said housing, electrode means supplying negative potential, said electrode means being in contact with a portion of the tip of said candle and being positioned outside of the direct flame area of the flame.

3,399,040
APPARATUS FOR TREATING BLOOD
John C. Ilg, Fitzwilliam, N.H., assignor to Elliot Laboratories, Inc., Fitzwilliam, N.H., a corporation of New Hampshire
Application Dec. 13, 1963, Ser. No. 331,342, now Patent No. 3,328,255, dated June 27, 1967, which is a continuation-in-part of application Ser. No. 297,854, July 26, 1963. Divided and this application Dec. 1, 1966, Ser. No. 598,443
25 Claims. (Cl. 23—258.5)

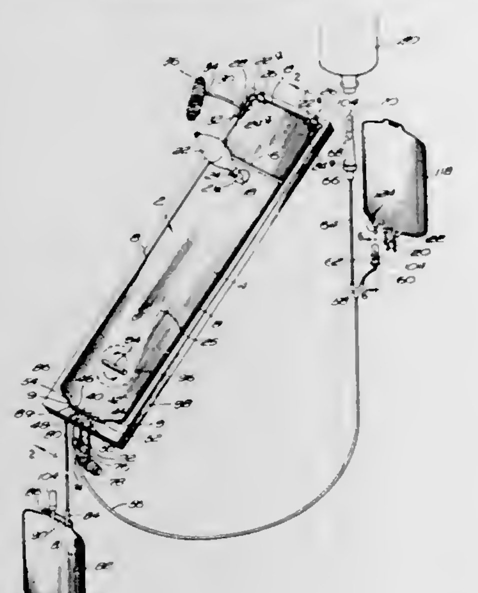

A disposable, sterile closed system, including an elongated plastic blood bag, for freezing blood cells, washing the thawed blood cells to agglomerate the cells to form a lower agglomerated cell layer and an upper spent washant layer containing undesired materials removed from the cells.

The blood bag is sealed and is provided with a magnetic stirrer. Preferably, it comprises a pair of flat, transparent or translucent plastic panels normally collapsed against each other, has a wide portion and a narrower portion with the wider portion having at least twice the capacity of the narrower portion and the internal surfaces of the plastic bag panels are provided with longitudinal ribs to provide flow passages when the panels are squeezed together.

The bag is provided with an outlet and a satellite bag connected therewith for collecting washed blood cells.

One or more of the bags has a fitting or cannula connected to an inlet or outlet thereof over which is located a protective cap sealed to the fitting or cannula by a plastic band shrunk therearound and is also provided with an inlet or outlet sealed by a cylindrical plug located therein and adapted to be forced out of the inlet or outlet into the bag by insertion of a cannula.

3,399,041
STABILIZATION OF HYDROCARBON LUBRICATING OILS, GREASES AND FUELS
Leo J. McCabe, Glassboro, N.J., assignor to Mobil Oil Corporation, a corporation of New York
No Drawing. Filed Jan. 21, 1966, Ser. No. 522,044
8 Claims. (Cl. 44—73)

1. Organic compositions normally susceptible to deterioration, selected from the group consisting of hydrocarbon lubricant oils and greases and liquid hydrocarbon fuels, containing a small amount sufficient to inhibit said deterioration, of the bis-salicylaldimine derivative of a diaminodithiaalkane, having the formula:

$$H_2N-\overset{R}{\overset{|}{C}}HCH_2-S-CH_2-CH_2-S-CH_2-\overset{R}{\overset{|}{C}}HNH_2$$

wherein R is selected from the group consisting of alkyl and hydrogen.

5. A composition in accordance with claim 1 wherein said composition is a liquid hydrocarbon fuel comprising a petroleum distillate fuel oil having an initial boiling point from about 75° F. to about 135° F. and an end boiling point from about 250° F. to about 750° F.

3,399,042
METHOD AND APPARATUS FOR CONVEYING AND HEAT TREATING GLASS SHEETS OVER A GAS SUPPORT BED
Harold A. McMaster, Woodville, and Norman C. Nitschke, Perrysburg, Ohio, assignors to Permaglass, Inc., Woodville, Ohio, a corporation of Ohio
Original application Nov. 29, 1963, Ser. No. 326,713, now Patent No. 3,332,759, dated July 25, 1967. Divided and this application Sept. 15, 1966, Ser. No. 579,629
11 Claims. (Cl. 65—25)

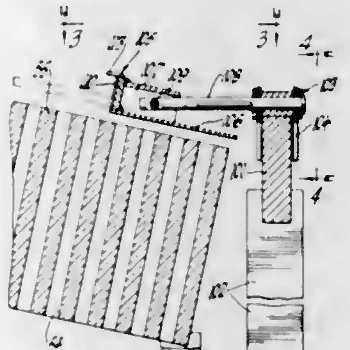

Method and apparatus for treating sheets of glass including an elongated bed with passages therein and means to cause gas to be emitted from the passages to support the sheets of glass above the bed. A loop conveyor disposed adjacent one longitudinal edge of the bed with supports pivotally attached to the loop conveyor and extending transversely over the edge of the bed for contacting the edges of glass sheets for moving the glass sheets therealong, the supports also being adapted to float on the gas above the bed.

3,399,043
ELECTRIC LAMP AND METHOD OF PRODUCTION
Thomas H. Elmer and Martin E. Nordberg, Corning, N.Y., assignors to Corning Glass Works, Corning, N.Y., a corporation of New York
Original application Jan. 24, 1963, Ser. No. 253,681, now Patent No. 3,258,631, dated June 28, 1966. Divided and this application Jan. 20, 1966, Ser. No. 521,911
7 Claims. (Cl. 65—30)

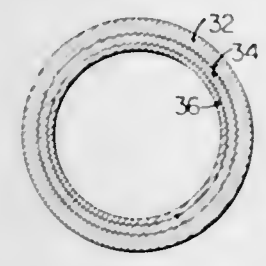

A method of making an improved colored lamp envelope from a unitary non-porous 96% silica glass by providing an envelope-shaped body of porous high-silica glass, dispersing an inorganic coloring agent in the pores of the body such that the inner surface of the body is free of coloring agent and then consolidating the body at elevated temperatures to form a nonporous structure.

3,399,044
APPARATUS FOR MANUFACTURING FLUORESCENT LAMPS
Dirk Kolkman and Anton Reynders, Emmasingel, Eindhoven, Netherlands, assignors to North American Philips Company, Inc., New York, N.Y., a corporation of Delaware
Filed July 6, 1964, Ser. No. 380,238
Claims priority, application Netherlands, July 11, 1963, 295,210
7 Claims. (Cl. 65—155)

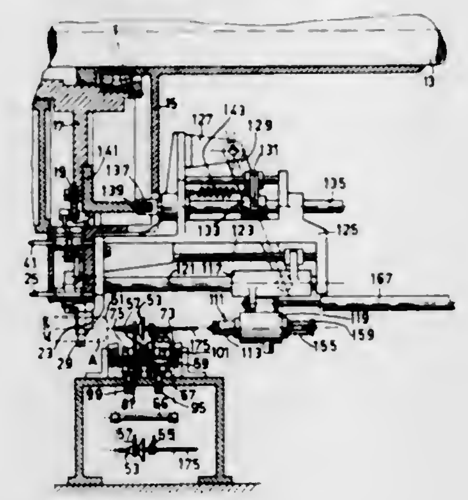

An apparatus for simultaneously sealing stem mounts to both ends of a horizontally conveyed tube for a fluorescent lamp, which apparatus comprises a plurality of tube holders arranged to be moved in a direction at right angles to the longitudinal axes of the tubes and a plurality of supports arranged to synchronously follow the movement of the tube holders for at least part of the distance to be travelled by the said holders and also arranged to guide the stem mounts to both ends of the respective tube simultaneously, and a plurality of burners also arranged to follow the said movement, the flames emerging from the burners being directed onto the flanged portion of the stem mount during the sealing operation.

3,399,045
APPARATUS FOR FEEDING ARTICLES TO AN ENDLESS OR CLOSED PATH CONVEYOR
Anton Reynders, Emmasingel, Eindhoven, Netherlands, assignor to North American Philips Company, Inc., New York, N.Y., a corporation of Delaware
Filed July 6, 1964, Ser. No. 380,335
Claims priority, application Netherlands, July 11, 1963, 295,211
5 Claims. (Cl. 65—155)

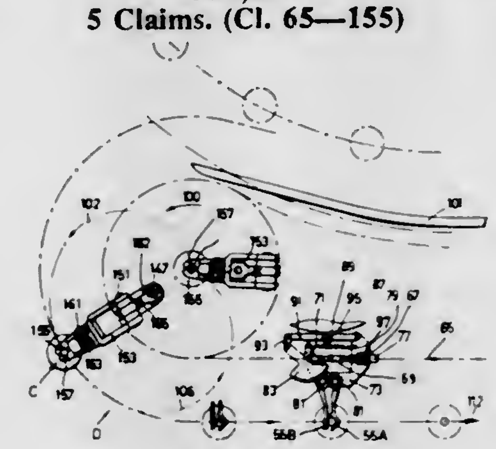

A heat sealing machine for fluorescent lamps including a transfer apparatus which receives fluorescent lamp components from a supply source and discharges the components onto a conveyor. The transfer apparatus is attached to a rotating wheel, over which the conveyor passes. A lamp component is engaged by the apparatus at a first position of the rotating wheel. After receiving the component the apparatus both rotates the component in the direction of the wheel and pivots the component in a direction parallel to the wheel axis thereby aligning the component with the conveyor. At this aligned position the lamp component is then transferred from the apparatus to a component holding means on the conveyor, while rotation of the wheel continues.

3,399,046
FURNACE SUSPENDED SKIMMER WALL
Levi S. Longenecker, 61 Mayfair Drive, Pittsburgh, Pa. 15228
Filed Dec. 29, 1964, Ser. No. 421,847
10 Claims. (Cl. 65—340)

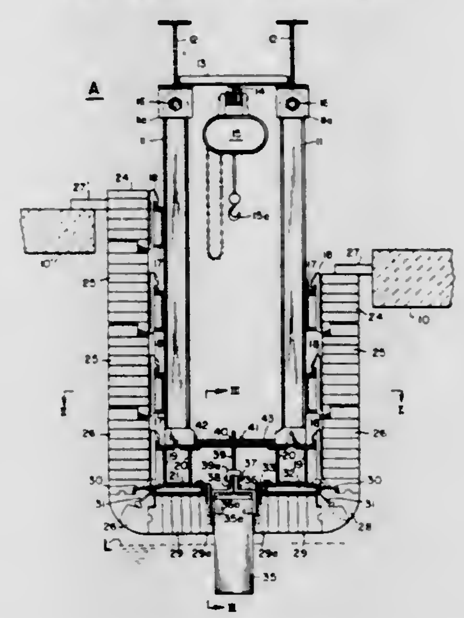

A furnace, such as used for providing molten glass, has an open roof portion through which a U-shaped frame

extends downwardly; the frame carries protective refractory blocks that define a downward continuation of the furnace roof and that extend above and across the flow path of the molten material in the furnace to provide a shadow wall. A skimmer wall of refractory construction is suspended downwardly between and is carried by the front and back parts of the U-shaped frame to project below a flow level of the molten material in the furnace. The construction of the shadow wall is such that it provides working space between the front and back parts and is swingably carried at its upper end portions, in order that it may be moved inwardly and outwardly with respect to the skimmer wall to permit the skimmer wall to be repaired, inserted and removed. Bottom end portions of the back and front wall parts are provided with cross-extending means connected therebetween for holding them in a closed relation with the skimmer wall and for spreading them apart or moving them about the upper swingable means when the skimmer wall is to be serviced.

3,399,047
MELTING FURNACE FOR MANUFACTURING FLAT GLASS
Edgard Brichard, Jumet, Belgium, assignor to Glaverbel, S.A., Brussels, Belgium
Filed Feb. 26, 1965, Ser. No. 435,576
Claims priority, application Luxembourg, Mar. 11, 1964, 45,637
8 Claims. (Cl. 65—346)

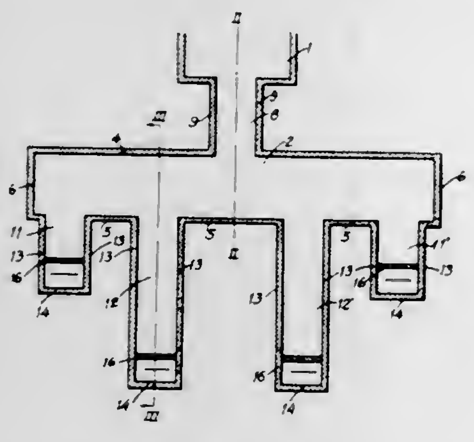

A plant for manufacturing flat glass by means of more than two horizontal annealing lehrs fed by a single melting and refining furnace, the plant including, for delivering molten glass from the furnace to the lehrs, a narrow feeding canal communicating with the furnace and extending parallel to the longitudinal axis thereof, a relatively long conditioning compartment extending perpendicular to the longitudinal axis of the melting furnace, and more than two distributor canals connected to the conditioning compartment at different locations therealong and extending perpendicular to the length of the compartment, each distributor canal distributing molten glass to a respective lehr.

3,399,048
SUBSTITUTED BENZYL N-METHYLCARBAMATES AS HERBICIDES
Richard A. Herrett, Raleigh, N.C., and Robert V. Berthold, South Charleston, W. Va., assignors to Union Carbide Corporation, a corporation of New York
No Drawing. Original application Apr. 2, 1963, Ser. No. 269,874. Divided and this application May 19, 1965, Ser. No. 457,189
10 Claims. (Cl. 71—106)

Substituted benzyl N-methylcarbamates, especially 3,4-dichlorobenzyl N-methylcarbamate, are used as selective pre-emergence herbicides.

3,399,049
METHOD OF CONTROLLING WEEDS
Wilbur F. Evans, Springhouse, Pa., and Thomas F. Wood, Wayne, N.J., assignors, by direct and mesne assignments, to Givaudan Corporation, a corporation of New Jersey
No Drawing. Filed Sept. 28, 1964, Ser. No. 399,872
5 Claims. (Cl. 71—123)

A new class of herbicides is disclosed. The active compounds are represented by the formula:

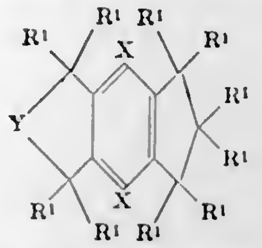

wherein X is selected from the group consisting of hydrogen, methyl and COR^2; wherein Y is selected from the group consisting of $—CHR^1—$ and

$$—CHR^1—CHR^1—$$

R^1 is selected from the group consisting of hydrogen and alkyl radicals containing from 1 to 3 total carbon atoms; and wherein R^2 is selected from the group consisting of hydrogen, alkyl radicals of from 1 to 6 total carbon atoms, and cyclo-alkyl groups.

3,399,050
PRODUCTION OF NICKEL POWDER
David J. I. Evans, Edmonton, Alberta, and Wasyl Kunda, Herbert Arthur Hancock, and Vladimir Nicolaus Mackiw, Fort Saskatchewan, Alberta, Canada, assignors to Sherritt Gordon Mines Limited, Toronto, Ontario, Canada, a company of Canada
Filed Feb. 23, 1965, Ser. No. 434,428
19 Claims. (Cl. 75—.5)

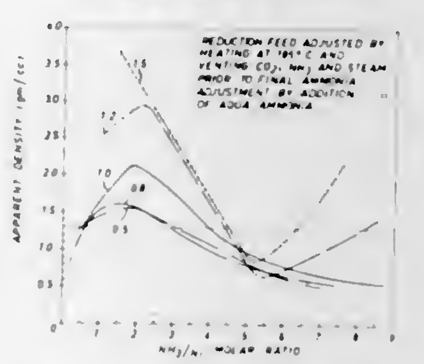

A process for producing nickel powder having a predetermined apparent density between 0.4 and 3.5 gm./cm.^{3} in which a slurry of basic nickel carbonate in aqueous ammonium carbonate solution is reacted with hydrogen at elevated temperature and pressure to effect direct reduction of the basic nickel carbonate to elemental nickel powder. Apparent density is controlled by controlling and correlating the NH_3/Ni molar ratio and CO_2/Ni molar ratio within certain specific ranges. The low apparent density powder product consists of particles in the form of grape-like clusters formed of numerous small sub-particles agglomerated together.

3,399,051
PROCESS FOR PRODUCING METAL POWDERS AND THE LIKE
John F. Hardy, Andover, and Merrill E. Jordan, Walpole, Mass., assignors to Cabot Corporation, Boston, Mass., a corporation of Delaware
No Drawing. Continuation-in-part of application Ser. No. 513,545, Dec. 13, 1965. This application Dec. 15, 1966, Ser. No. 601,861
7 Claims. (Cl. 75—.5)

This invention relates to improvements in the process for producing metals by heating to reducing temperatures a mixture comprising a reducible metal compound and carbon under non-oxidizing conditions; said improvement comprising producing said mixture by providing a solution comprising a soluble, reducible metal salt or complex salt and an inert solvent, mixing into said solution particulate carbon and removing the solvent from the resulting mixture.

3,399,052
BARIUM POWDER GETTER PRODUCTION METHOD
Donald E. Bobo, Indianapolis, Ind., assignor to Union Carbide Corporation, a corporation of New York
Continuation of application Ser. No. 449,980, Apr. 22, 1965. This application Nov. 3, 1967, Ser. No. 680,590
3 Claims. (Cl. 75—.5)

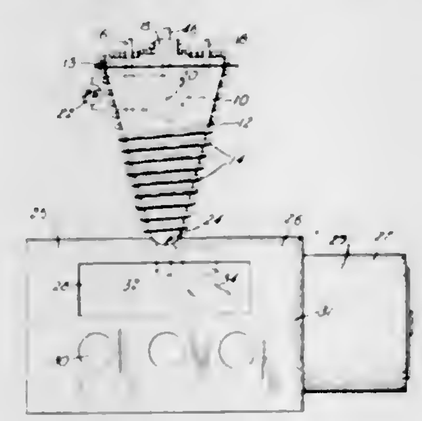

Barium is vaporized with an electric arc in an inert gas such as helium, and the so vaporized barium particles are blown away from the area of the arc and cooled in order to prevent their coagulating into a mass having a size over 200 Angstroms.

3,399,053
METHOD AND APPARATUS FOR CONTROLLING SINTERING PROCESSES IN CONVEYOR TYPE SINTERING MACHINES
Erich Schütz, Bischofsheim, and Walter Hastik, Frankfurt am Main, Germany, and Matthias Joseph Wilhelm Egbert Nievelstein, deceased, late of Frankfurt am Main, Germany, by Marta Maria Nievelstein and Ingrid Helmi Nievelstein, heirs, Frankfurt am Main, Germany, assignors to Metallgesellschaft Aktiengesellschaft, Frankfurt am Main, Germany
Filed Sept. 3, 1965, Ser. No. 492,350
Claims priority, application Germany, Sept. 5, 1964, M 62,349
6 Claims. (Cl. 75—5)

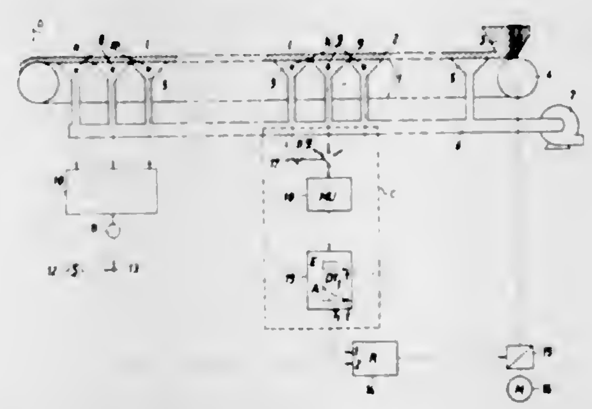

There is disclosed a method and apparatus for use in connection therewith for controlling the sintering of material moving along a predetermined conveyor path under the influence of forced draft combustion wherein the temperature of the waste gases resulting from the combustion is continuously sensed at a plurality of locations along the path of material and this data used for determining an approximate material temperature profile along either the entire length or a selected portion of the conveyor length between the charging and dumping stations. By continuously adjusting the speed of material movement in relation to the temperature profile determined by the waste gas temperature measurement, a selected material temperature profile and hence a maximum material temperature position with respect to the dumping station can be arrived at.

3,399,054
PROCESS FOR THE MANUFACTURE OF FERROMANGANESE AFFINÉ OF LOW SILICON CONTENT
Zeno Mutter, Knapsack, near Cologne, and Friedrich Wilhelm Dorn, Hurth, near Cologne, Germany, assignors to Knapsack Aktiengesellschaft, Knapsack, near Cologne, Germany, a corporation of Germany
Continuation-in-part of application Ser. No. 360,600, Apr. 17, 1964. This application Nov. 21, 1966, Ser. No. 595,651
4 Claims. (Cl. 75—80)

A process for making ferromanganese affiné having a silicon content of 1.5% or less and obtained by melting
(a) ferromanganese having high silicon concentration,
(b) an oxidic manganese ore and/or slag containing manganese oxide,
(c) a basic slag former and
(d) a flux.
The resulting low silicon-containing ferromanganese product is obtained when 90% of the (a) component consists of particles of .01–.3 mm. size and 10% less than .01 mm. size; and the (b) component is in the form of particles having a maximum size of 5–10 mm.

3,399,055
SEPARATION OF COBALT BY LIQUID EXTRACTION FROM ACID SOLUTIONS
Gordon M. Ritcey, Bells Corners, Ontario, and Allan W. Ashbrook, Ottawa, Ontario, Canada, assignors to Eldorado Mining and Refining Limited, Ottawa, Ontario, Canada, a company of Canada
No Drawing. Filed June 21, 1965, Ser. No. 465,789
16 Claims. (Cl. 75—119)

A process for the separation of cobalt and nickel from an acid leach solution containing cobalt and nickel, which comprises contacting said solution with a salt of an organophosphoric acid haivng the formula

$$\begin{array}{c} R \\ | \\ O \\ | \\ R{-}O{-}P{=}O \\ | \\ OH \end{array}$$

wherein R is selected from the group consisting of hydrogen, alkyl, aryl and aralkyl and wherein not more than one R is hydrogen, each R group other than hydrogen containing at least 8 carbon atoms and the phosphoric acid molecule containing at least 12 carbon atoms, said salt being dissolved in an inert organic solvent, and said separation being conducted at a pH of about 5.0 to about 6.5, whereby the cobalt values are extracted from the aqueous phase to the organic phase from the remaining aqueous phase. Subsequently the organic phase is scrubbed to remove nickel, and cobalt valves are then stripped from the organic phase.

3,399,056
ELECTRICAL RESISTANCE ALLOYS
Toshio Doi, Tokyo, Japan, assignor to Hitachi, Ltd., Tokyo, Japan, a corporation of Japan
Filed Apr. 8, 1966, Ser. No. 541,291
Claims priority, application Japan, Apr. 12, 1965, 40/21,185
4 Claims. (Cl. 75—159)

1. A copper-nickel-germanium alloy consisting essen-

tially of copper and nickel, the copper to nickel ratio being from 50:50 to 65:35 by weight and from 0.2% to 5.1%,

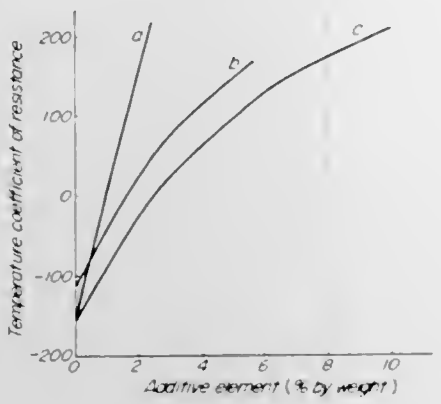

by weight, of germanium; the impurity content not exceeding 1% by weight.

3,399,057
COPPER NICKEL ALLOYS
William Henry Richardson, Datchet, and Douglas Brown, Slough, England, assignors to Langley Alloys Limited, Slough, England, a British company
No Drawing. Continuation-in-part of application Ser. No. 627,642, Apr. 3, 1967. This application Feb. 20, 1968, Ser. No. 707,392
8 Claims. (Cl. 75—159)

A cupro-nickel alloy having high strength, high ductility and excellent resistance to corrosion and sea water, and a magnetic permeability of below 1.1 having the following compositions by weight: nickel, 15–32%; aluminium, 1.5–3%; manganese, 4–6%; iron, .5–2%; balance—copper. The cupro-nickel alloy may also contain up to 5% chromium, up to 3% columbium and up to 3% silicon.

3,399,058
SULFIDATION AND OXIDATION RESISTANT COBALT-BASE ALLOY
Milton S. Roush, Phoenix, Ariz., assignor to The Garrett Corporation, a corporation of California
Continuation-in-part of application Ser. No. 322,096, Nov. 7, 1963. This application Jan. 25, 1967, Ser. No. 617,755
10 Claims. (Cl. 75—170)

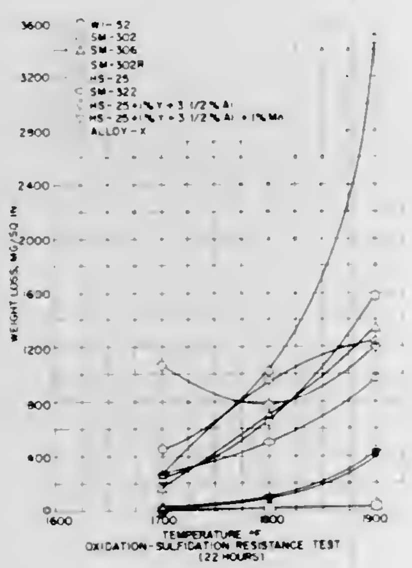

A sulfidation and oxidation resistant cobalt-base alloy comprised of a major amount of cobalt, between about 0.05% and 3.0% by weight yttrium, between about 1.0% and 6.0% by weight aluminum and preferably also containing chromium, tungsten and/or molybdenum, columbium and/or tantalum and carbon.

3,399,059
TITANIUM ALLOYS
Evan William Evans, Hagley, and Michael Duncan Smith, Shenstone, Lichfield, England assignors to Imperial Metal Industries (Kynoch) Limited, London, England, a corporation of Great Britain
Filed June 14, 1965, Ser. No. 463,573
Claims priority, application Great Britain, June 23, 1964, 25,932/64
10 Claims. (Cl. 75—175.5)

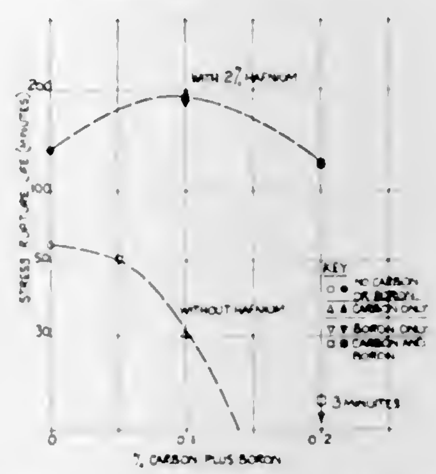

Titanium-base alloys consisting of 15–35% molybdenum, 15–35% vanadium with the total molybdenum plus vanadium content being in the range 40–55% have high stress rupture life at high temperature. The properties of the basic alloy are improved by the addition of hafnium, boron and carbon.

3,399,060
ELECTROPHOTOGRAPHIC PRODUCT AND METHOD FOR ACHIEVING ELECTROPHOTOGRAPHIC COPYING
John J. Clancy, Westwood, Mass., assignor to Arthur D. Little, Inc., Cambridge, Mass., a corporation of Massachusetts
Filed Apr. 16, 1963, Ser. No. 273,404
12 Claims. (Cl. 96—1.4)

A printing base and a method for electrostatic reproduction. A photoconductive layer in the form of an essentially continuous film having voids ranging between 0.5 and 10 microns is carried on a substrate. The film may be formed of an organic material which is itself photoconductive, or it may be a nonphotoconductive material which contains photoconductive particles. The photoconductive layer may be made relatively light in weight. It is also, on an equal basis, more sensitive than a film formed without voids.

3,399,061
PROCESS FOR IMPROVING THE COLOR OF FREEZE-DRIED COFFEE
George J. Lutz, Greenwich, Conn., assignor to General Foods Corporation, White Plains, N.Y., a corporation of Delaware
Continuation-in-part of application Ser. No. 265,106, Mar. 14, 1963. This application Mar. 29, 1965, Ser. No. 446,773
3 Claims. (Cl. 99—71)

1. A process for producing freeze-dried coffee of dark coffee-like color having a Munsell color rating of between 12.5, 2.5/4 and 17.5, 5/6 which comprises slowly cooling coffee extract with agitation from its ice point to below its eutectic point over a period of about 15–30 minutes, to thereby form a crystalline structure of substantially pure water ice distributed in a frozen matrix of a eutectic mixture of water, said water ice having a dendritic form characterized by nonparallel main stems, smaller extending branches from said main stems and an absence of discrete ice crystals of nondendritic form in the eutectic mixture located between said dendritic ice crystals, coffee solids and aromatics; and freeze-drying said frozen matrix to a stable moisture content.

3,399,062
PRODUCING FRENCH FRIED VEGETABLES FROM STARCH - CONTAINING DEHYDRATED VEGETABLES AND A CELLULOSE ETHER BINDER
Miles J. Willard, Jr., and Gerald P. Roberts, Idaho Falls, Idaho, assignors to Rogers Brothers Company, Bonneville, Idaho, a corporation of Delaware
Continuation-in-part of applications Ser. No. 348,321, and Ser. No. 348,324, Feb. 26, 1964. This application Jan. 8, 1965, Ser. No. 424,338
14 Claims. (Cl. 99—100)

1. A process for producing an edible product comprising:

providing a dehydrated strach-containing vegetable in the form of aggregates, said aggregates containing at least a majority of their cells intact,

adding water at a temperature between 45° and 130° F. for rehydrating said dehydrated vegetable,

adding a thermal gelling cellulose ether binder to said vegetable to form a mixture,

mixing said mixture for a sufficient time to rehydrate substantially all of said dehydrated vegetable in the presence of said binder and at a temperature between 45° and 130° F.,

extruding said mixture at a temperature not over 110° F., and

deep fat frying said mixture to form an edible product.

3,399,063
INJECTION INTO POULTRY MEAT OF PHOSPHATES IN NON-AQUEOUS SUSPENSION
Donald V. Schwall, Glen Ellyn, and Alan B. Rogers, Palos Park, Ill., and Dennis Corbin, Evansville, Ind., assignors to Armour and Company, Chicago, Ill., a corporation of Delaware
No Drawing. Continuation-in-part of application Ser. No. 492,319, Oct. 1, 1965. This application Nov. 17, 1967, Ser. No. 683,794
6 Claims. (Cl. 99—107)

In the treatment of raw poultry for cooking, a water-soluble sodium or potassium polyphosphate salt is suspended in a non-aqueous vehicle, such as edible fat, and the mixture introduced into muscular portions of the poultry whereby subsequently during contact with the natural juices of the poultry, the salt migrates away from the fat and into the natural juices and into the muscular portions of the poultry.

3,399,064
METHOD OF MANUFACTURE OF KETCHUP
Anthony S. Partyka, Chicago, and George Bosy, Park Ridge, Ill., assignors to National Dairy Products Corporation, New York, N.Y., a corporation of Delaware
Filed May 18, 1966, Ser. No. 551,095
3 Claims. (Cl. 99—144)

Ketchup prepared by forming a mixture of ketchup ingredients without heating and heating the mixture by contacting the mixture with increments of steam.

3,399,065
METHOD OF PRODUCING EMULSION-TYPE SAUSAGES
Hugo E. Wistreich, Chicago, Henry J. Gorsica, Northbrook, and David B. Peryam, Park Forest, Ill., assignors to B. Heller & Company, a corporation of Illinois
No Drawing. Filed Jan. 28, 1965, Ser. No. 428,855
10 Claims. (Cl. 99—159)

This application deals with a method of preparing ground meat products such as sausages which during processing exhibit enhanced moisture retention properties. In the illustrative embodiment, powdered milk and dry enzyme capable of precipitating proteins when both are dissolved in an aqueous medium, are incorporated into the wet macerated meat mixture. When the powdered milk is hydrated and the enzyme activated by the water in the emulsion type meat product, a precipitated protein having water binding properties is formed in situ.

3,399,066
METHOD FOR MANUFACTURING CASING FROM A CONTINUOUS TUBE
Francis Ziolko, Somerville, N.J., assignor to Johnson & Johnson, a corporation of New Jersey
Original application May 29, 1963, Ser. No. 284,048, now Patent No. 3,315,300, dated Apr. 25, 1967. Divided and this application Dec. 1, 1966, Ser. No. 600,690
3 Claims. (Cl. 99—176)

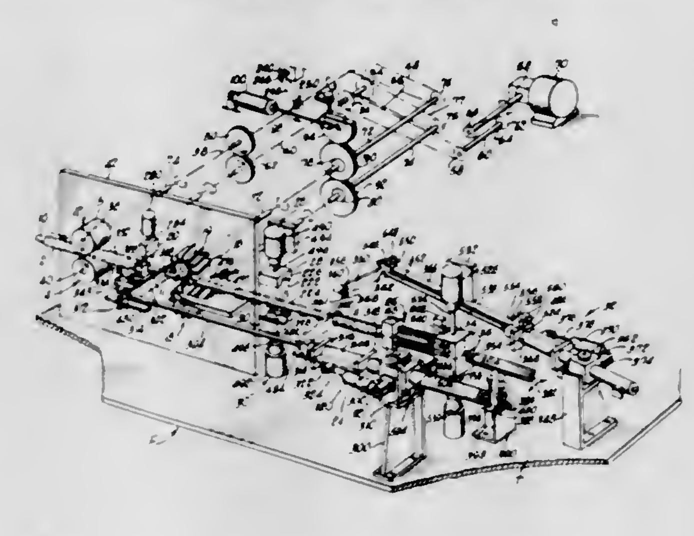

A continuous, inflated collagen tube is shirred on a mandrel disposed axially within the tube by the wiping action of flexible fingers mounted on a pair of coacting, shirring rolls. The diameter of the inflated tube prior to shirring is continuously monitored by contacting the surface of the inflated tube with a dancer roller to provide a signal that is indicative of the diameter of the tube. The shirred tube is cut into discrete lengths, compressed, and delivered to a discharge station where certain links, the diameter of which varies from predetermined limits, is segregated in response to the signal.

3,399,067
PRECISION CASTING
Robert K. Scott, Pittsburgh, Pa., assignor to Dresser Industries, Inc., Dallas, Tex., a corporation of Delaware
No Drawing. Filed Nov. 29, 1965, Ser. No. 528,317
2 Claims. (Cl. 106—38.3)

In methods for preparing molds for precision casting from batches of refractory grain and prehydrolized alkyl silicate binder, the refractory grain is selected from calcined natural high alumina materials and zircon and South American bauxite is present to provide sufficient free Al_2O_3 to react with free SiO_2 present to form mullite.

3,399,068
ATTAPULGITE PRODUCT AND METHOD OF PREPARING SAME
Norman H. Horton, Tallahassee, Fla., assignor, by mesne assignments, to Engelhard Minerals & Chemicals Corporation, Menlo Park, N.J., a corporation of Delaware
No Drawing. Filed Mar. 18, 1966, Ser. No. 535,337
9 Claims. (Cl. 106—72)

A degritted clay product especially adapted for use in thickening aqueous liquids is prepared by dispersing crude attapulgite clay in water in the presence of a sodium condensed phosphate dispersant, such as tetrasodium pyrophosphate, degritting and centrifuging the dispersion, adding a water-soluble alkaline earth metal or heavy metal salt to the dispersion in amount of 1 equivalent per equivalent of alkali metal in the dispersant, thereby precipitating the dispersant. The mixture is dried under mild conditions and ground.

3,399,069
SPRAY DRIED POLYMERIC ALCOHOL XANTHATES
Douglas J. Bridgeford, Danville, Ill., assignor to Tee-Pak, Inc., Chicago, Ill., a corporation of Illinois
Continuation-in-part of application Ser. No. 200,621, June 7, 1962. This application Dec. 8, 1964, Ser. No. 416,795
23 Claims. (Cl. 106—164)

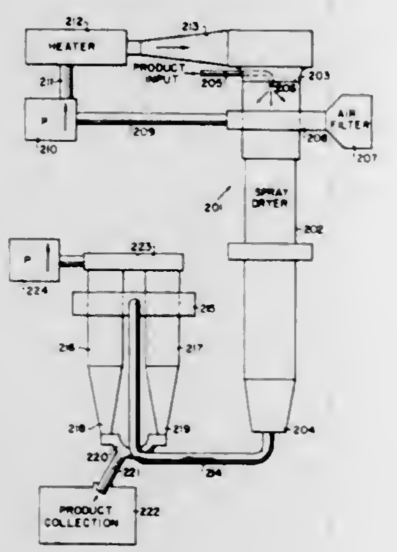

Solid dry finely divided polymeric alcohol xanthates, such as xanthates of cellulose, starch, amylose, dextran, sugars, polyvinyl alcohol, polyallyl alcohol, etc., are prepared by spray drying solutions of said xanthates at a pH less than 13. The product is stable at room temperature and is redissolved in water with relative ease.

3,399,070
TECHNIQUE FOR FABRICATING FLECKED METALLIZED YARN
Walter G. Scharf, 243 Palmer Court, Ridgewood, N.J. 07450
Filed Sept. 1, 1964, Ser. No. 393,549
7 Claims. (Cl. 117—4)

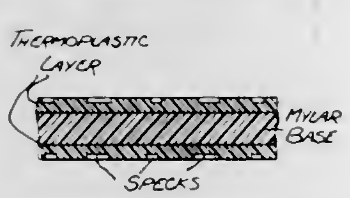

A process for producing a synthetic textile yarn having a flecked appearance, in which a base web of flexible synthetic material having a high softening point is coated on either side with a solution of heat-reactive thermoplastic material having a low melting point, specks of colored material, some of which are metallic, being dispersed randomly across the web while the coatings are not fully dried, the coated web thereafter being fed through heated pressure rolls which act to soften the coating and embed the specks therein.

3,399,071
LAMINATES OF A POLYOLEFIN, A MALEIC ACID ANHYDRIDE MODIFIED OLEFIN POLYMER WAX AND PRINTING INK
Roy H. Schaufelberger, Basking Ridge, and Clayton S. Myers, Fanwood, N.J., assignors to Union Carbide Corporation, a corporation of New York
No Drawing. Continuation of application Ser. No. 453,503, May 6, 1965. This application July 11, 1967, Ser. No. 656,307
2 Claims. (Cl. 117—12)

A laminate of a polyolefin and a printing ink free of the polymer wax subsequently described adhered to the surface thereof by an adhesion promoter consisting of a modified olefin polymer wax having a molecular weight of from about 1,000 to about 5,000 reacted with maleic acid anhydride.

3,399,072
MAGNETIC MATERIALS
George R. Pulliam, La Mirada, Calif., assignor to North American Rockwell Corporation, a corporation of Delaware
Continuation of application Ser. No. 262,742, Mar. 4, 1963. This application Apr. 14, 1967, Ser. No. 631,104
10 Claims. (Cl. 117—62)

A process for epitaxially growing a spinel ferrite on a substrate of MgO. The process comprises the steps of vaporizing, in a chamber, one or more compounds of the class consisting of $FeBr_2$, $MgBr_2$, $MnBr_2$, $CoBr_2$, $NiBr_2$, $ZnBr_2$ and $CuBr_2$, and introducing water vapor and sufficient oxygen into the chamber, thereby to cause a spinel ferrite, derived at least in part from the vaporized compounds, to be deposited in epitaxial relation with the MgO substrate. The reaction takes place at a temperature above 500° C.

3,399,073
POLYESTER FILMS HAVING A POLY (ALKYLENE OXIDE) GLYCOL ETHER LAYER FUSED THERETO AND PROCESS FOR MAKING SAME
John R. Caldwell and Russell Gilkey, Kingsport, Tenn., assignors to Eastman Kodak Company, Rochester, N.Y., a corporation of New Jersey
No Drawing. Filed July 22, 1964, Ser. No. 384,540
3 Claims. (Cl. 117—62.1)

A polyester sheet or film having improved surface properties is prepared by applying to and fusing with the surface of said sheet or film a hydrophilic layer composed of a poly(alkylene oxide) glycol ether containing a colloidally dispersed oxide of a polyvalent metal.

3,399,074
CAST COATING PROCESS USING RAW STARCH AS ADHESIVE
Bruce C. Gottwald and John M. Haigh, Richmond, Va., assignors to Albemarle Paper Company, Richmond, Va., a corporation of Virginia
Continuation of application Ser. No. 296,683, July 23, 1963. This application June 28, 1967, Ser. No. 649,741
5 Claims. (Cl. 117—64)

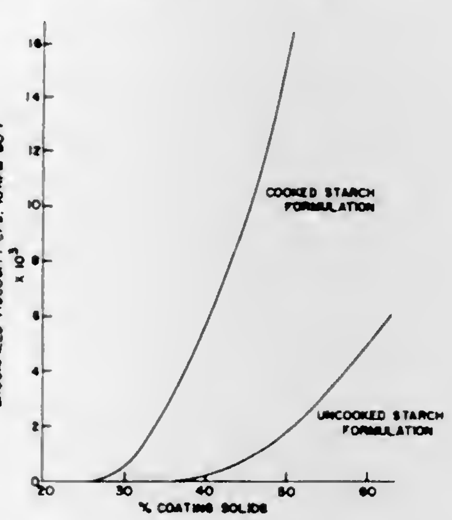

Process for cast coating a smooth surface on a web material comprising coating web surface with low viscosity coating slurry containing raw starch as essentially the adhesive portion and then pressing the slurry coated web surface against a smooth heated surface until a substantially tack-free smooth hard surface is formed on the web. Smooth surface may be heated to temperature of from 200° F. to about 325° F. and slurry coated surface pressed against heated smooth surface at pressure of from about 10 to about 200 p.s.i.

3,399,075
COATING COMPOSITIONS IN NONPOLAR VEHICLES HAVING ADDITIVE FOR ADJUSTING ELECTRICAL PROPERTIES AND METHOD OF USING
Lester L. Spiller, Indianapolis, Ind., assignor to Ransburg Electro-Coating Corp., Indianapolis, Ind., a corporation of Indiana
No Drawing. Filed June 16, 1965, Ser. No. 464,574
14 Claims. (Cl. 117—93.4)

An additive is provided whereby the electrical characteristics of coating compositions in non-polar vehicles may be adjusted for electrostatic spraying and particularly electrostatic atomization without the use of polar solvents.

3,399,076
METHOD OF WETTING SILICON NITRIDE
Michael J. Ginsberg and Richard H. Krock, Peabody, Mass., assignors to P. R. Mallory & Co. Inc., Indianapolis, Ind., a corporation of Delaware
Filed Apr. 8, 1965, Ser. No. 446,606
4 Claims. (Cl. 117—121)

A nickel-titanium-silicon alloy is used to wet silicon nitride.

3,399,077
MONOAZO PIGMENTS AND TEXTILES DECORATED THEREWITH
John J. De Lucia, New Milford, N.J., and Roy A. Pizzarello, Mount Vernon, N.Y., assignors to Interchemical Corporation, New York, N.Y., a corporation of Ohio
No Drawing. Original application Aug. 14, 1964, Ser. No. 389,774, now Patent No. 3,332,932, dated July 25, 1967. Divided and this application July 25, 1966, Ser. No. 567,386
5 Claims. (Cl. 117—121)

Textile fabrics decorated with resin-bonded pigments, wherein the pigments are monoazo pigments made by coupling diazotized 3-amino-4-methyl benzamide with certain Naphthol AS type coupling components.

3,399,078
DEVELOPING AND APPLICATION METHODS OF CERAMIC COATING
Carlo A. M. Bang, Yokohama, Japan, assignor to Seiichi Inouye, Yokohama, Japan
No Drawing. Continuation-in-part of application Ser. No. 162,910, Dec. 28, 1961. This application June 2, 1965, Ser. No. 461,229
7 Claims. (Cl. 117—129)

The quality of ceramic coatings for application to ferrous metal can be considerably improved by employing stated amounts of alkali metal borate, boric acid, a thermally alterable siliceous compound, plastic clay and an adhesive. The siliceous compound is one that either melts or dissolves or sometimes both at least by a temperature of about 1300° C. The components of the composition are mixed according to standard techniques and applied to the surface of ferrous metal by processes understood in the art. Essentially, the coating is applied to the surface of the metal, dried and baked to a temperature of about 700° C. to 1300° C., preferably at 850° C. to 1100° C. The resulting coating has enhanced hardness and durability.

3,399,079
ANTISTATIC FIBER BLEND
Seth Owens Harris, Danbury, Conn., and Charles Alexander Ball, Mount Vernon, N.Y., assignors to American Cyanamid Company, Stamford, Conn., a corporation of Maine
No Drawing. Filed Sept. 25, 1964, Ser. No. 399,396
5 Claims. (Cl. 117—138.8)

A blend of hydrophobic synthetic fibers having improved antistatic properties and improved processability through textile machines consisting essentially of a major proportion comprising from about 55% to about 90% of the fibers in the blend having applied thereto a durable friction-reducing antistatic agent and a minor proportion comprising from about 10% to about 45% of the fibers in the blend having applied thereto a friction-increasing agent.

3,399,080
PAPER COATED WITH AN INTERPOLYMER OF A MONOETHYLENICALLY UNSATURATED ACID, AN OPEN-CHAIN ALIPHATIC CONJUGATED DIOLEFIN AND AN ALKENYL AROMATIC MONOMER
John F. Vitkuske, Midland, Mich., assignor to The Dow Chemical Company, Midland, Mich., a corporation of Delaware
No Drawing. Continuation-in-part of application Ser. No. 203,695, June 20, 1962. This application Nov. 2, 1966, Ser. No. 591,427
4 Claims. (Cl. 117—155)

This application is concerned with paper coated with a continuous adherent dried coating comprising mineral pigment and a binder which has as the principal film-forming constituent, an interpolymer of a monoethylenically unsaturated acid, an open-chain aliphatic conjugated diolefin and an alkenyl aromatic monomer.

3,399,081
PROCESS FOR PREPARING PREGELATINIZED STARCHES
Raffaele Bernetti, Rozzano, Italy, and Charles H. Staff, Highland, and Stanley A. Watson, La Grange Park, Ill., assignors to Corn Products Company, New York, N.Y., a corporation of Delaware
No Drawing. Filed Aug. 5, 1964, Ser. No. 387,769
5 Claims. (Cl. 127—71)

1. A process for preparing a gelatinized starch which comprises contacting an ungelatinized starch with a solvent system consisting essentially of an alcohol and at least 45% by weight of liquid ammonia based on said system, and separating said starch from said solvent system.

3,399,082
GRAPHITE CONTAINING COMPOSITION AND THERMOELECTRIC GENERATOR
Courtland M. Henderson, Xenia, and Heinz B. Jankowsky, Dayton, Ohio, assignors to Monsanto Research Corporation, St. Louis, Mo., a corporation of Delaware
Filed Oct. 11, 1963, Ser. No. 315,596
19 Claims. (Cl. 136—203)

A coating composition having heat-emissive properties and comprising a mixture of graphite particles in a film-forming vehicle, said particles being diversely dimensioned platelets having a diameter of from 10 to 300 microns, with 80% by weight of said particles having a diameter of between about 43 microns and about 250 microns and 40% by weight of the particles having a diameter of about 70 to about 150 microns. The composition is particularly useful as a coating for metal radiators of thermoelectric devices. Examples of the film-forming vehicle are the polysiloxanes and phenol-formaldehyde varnish.

3,399,083
THERMOELECTRIC BODY INCLUDING PYROLYZED REACTION PRODUCT OF PYROMELLITONITRILE AND ALKANOL AND WITH COMMINUTED METAL
Donald E. Swihart, Englewood, Ohio, assignor to Monsanto Research Corporation, St. Louis, Mo., a corporation of Delaware
Filed Feb. 17, 1964, Ser. No. 345,142
12 Claims. (Cl. 136—236)

A thermoelectric body formed by pressing together (1) the pyrolyzed reaction product of pyromellitonitrile and

a lower alkanol and (2) a metal selected from the class consisting of Zn, Sb, Cu, Al, Ni and alloys of each other, and subsequently heating the resulting coherent, solid body at 200° to 800° C. The finished body is useful as a thermoelement in thermoelectric devices.

3,399,084
METHOD OF MAKING ALUMINUM BRONZE ARTICLES
George H. Eichelman, Jr., Cheshire, Conn., and Irwin Broverman, Chicago, Ill., assignors to Olin Mathieson Chemical Corporation, a corporation of Virginia
Filed Oct. 11, 1965, Ser. No. 494,596
14 Claims. (Cl. 148—11.5)

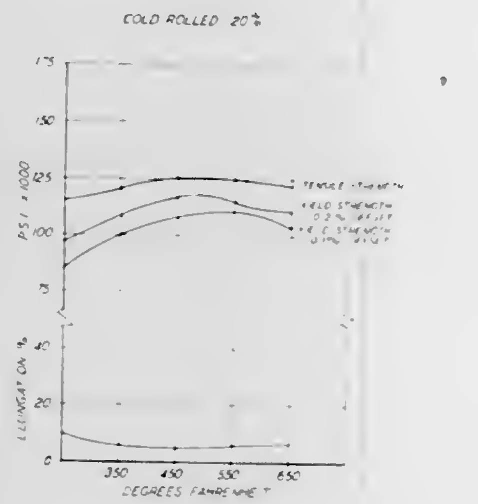

1. The method of fabricating a high strength aluminum-bronze alloy containing from 9.0 to 11.8% aluminum and the balance essentially copper, which comprises: hot working an alloy having the aforesaid composition at a temperature of from 1850 to 1000° F.; cold working said alloy at a temperature of below 300° F.; and holding said alloy for at least 15 minutes at a temperature of from 350 to 650° F.

3,399,085
METHOD OF NITRIDING
Herbert E. Knechtel, Monroeville Borough, and Harry H. Podgurski, Greensburg, Pa., assignors to United States Steel Corporation, a corporation of Delaware
Filed Dec. 22, 1965, Ser. No. 515,548
6 Claims. (Cl. 148—16.6)

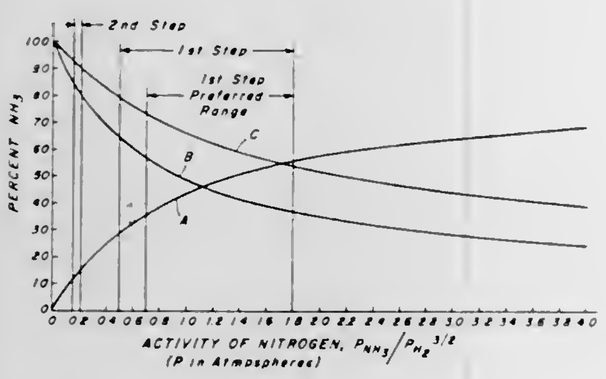

Method of nitriding steel surfaces in which surface is treated with a binary mixture of ammonia and hydrogen at an elevated temperature and atmospheric pressure. The ammonia decomposes and its nitrogen combines with alloying elements in the steel to form nitrides. Conditions are controlled to prevent nucleation of iron nitride, thus avoiding formation of objectionable "white layer," which otherwise must be machined off the nitrided surface.

3,399,086
DISPERSION HARDENING OF METAL
Dilip K. Das, Bedford, and George Freedman, Wayland, Mass., assignors to Raytheon Company, Lexington, Mass., a corporation of Delaware
No Drawing. Continuation of application Ser. No. 400,200, Sept. 29, 1964. This application Feb. 13, 1967, Ser. No. 615,846
1 Claim. (Cl. 148—32)

A copper alloy in the cold-worked annealed condition having a hardening oxide metal dispersion selected from the group consisting of aluminum oxide, chromium oxide, magnesium oxide and zirconium oxide, further characterized by having an elastic strength approximately twice that of the copper alloy in the oxidized dispersion-hardened condition.

3,399,087
CASTABLE PROPELLANT COMPOSITIONS CONTAINING ISOOLEFIN - DIOLEFIN COPOLYMERS
Joseph J. Scigliano, Sacramento, Calif., assignor to Aerojet-General Corporation, Azusa, Calif., a corporation of Ohio
No Drawing. Filed June 8, 1962, Ser. No. 202,351
20 Claims. (Cl. 149—19)

4. A high energy, thermally stable rubber propellant composition comprising the reaction product of about 5 to 25 parts by weight per 100 parts of propellant of a linear, essentially hydrocarbon, liquid isoolefin-diolefin copolymer having a molecular weight of from about 1000 to about 5000 and consisting essentially of isoolefin units of the formula:

$$\left[\begin{array}{ccccc} & \mathrm{H} & & \mathrm{R_1} & \\ & | & & | & \\ - & \mathrm{C} & - & \mathrm{C} & - \\ & | & & | & \\ & \mathrm{H} & & \mathrm{R_2} & \end{array}\right]$$

wherein R_1 and R_2 are lower alkyl groups, and diolefin units of the formula:

$$\left[\begin{array}{ccccccccc} & \mathrm{R_3} & & \mathrm{R_4} & & \mathrm{R_5} & & \mathrm{R_6} & \\ & | & & | & & | & & | & \\ - & \mathrm{CH} & - & \mathrm{C} & = & \mathrm{C} & - & \mathrm{CH} & - \end{array}\right]$$

wherein R_3, R_4, R_5 and R_6 are selected from the group consisting of hydrogen and lower alkyl, the ratio of said isoolefin units to said diolefin units in said copolymer being from about 20 to 1 to about 100 to 1, about 0.5 to 5 parts of a curing agent per 100 parts of propellant, and about 10 to 75 parts of an oxidizer per 100 parts of propellant, said propellant having an oxygen balance of from about 0 to about −60.

3,399,088
ROOM TEMPERATURE CURED SOLID PROPELLANT
Charles M. Christian and Robert B. Kruse, Huntsville, Ala., assignors to Thiokol Chemical Corporation, Bristol, Pa., a corporation of Delaware
No Drawing. Filed Apr. 21, 1966, Ser. No. 544,080
2 Claims. (Cl. 149—19)

A room temperature cured propellant composition consisting in parts by weight of a hydroxyl terminated polybutadiene polymer, toluene diisocyanate, epoxidized novolac resin, 2-ethyl hexoic acid salt of tri(dimethyl amino methyl) phenol, butyl carbitol formal or butyl ferrocene, ammonium perchlorate and powdered aluminum.

3,399,089
GELATINIZED DINITROTOLUENE-NITROSTARCH EXPLOSIVES
George L. Griffith, Coopersburg, Pa., assignor to Trojan Powder Company, Allentown, Pa., a corporation of New York
No Drawing. Continuation-in-part of application Ser. No. 567,396, July 25, 1966. This application June 29, 1967, Ser. No. 649,805
17 Claims. (Cl. 149—39)

A nitrostarch explosive sensitizer composition is provided comprising dinitrotoluene in gelatinized combination with nitrostarch as a supplemental sensitizer. This composition can be used as an explosive sensitizer in explosive formulations of various kinds. When formulated as an explosive, this composition also desirably contains an inorganic oxidizer salt and optional additional ingredients, such as fuels, stabilizers and other components conventional in explosive formulations.

3,399,090
PROCESS OF ETCHING METAL WITH AMMONIUM PERSULFATE WITH RECOVERY AND RECYCLING
Frank E. Caropreso, Hamilton Square, Kenneth J. Radimer, Little Falls, and Bernard J. Hogya, Sayreville, N.J., assignors to FMC Corporation, New York, N.Y., a corporation of Delaware
No Drawing. Continuation-in-part of application Ser. No. 451,635, Apr. 28, 1965. This application Sept. 26, 1967, Ser. No. 670,790
11 Claims. (Cl. 156—19)

A spent, aqueous ammonium persulfate etching solution, containing residual ammonium persulfate values and dissolved copper, cobalt, iron, nickel, zinc or magnesium is reactivated without substantial loss of ammonium persulfate values by cooling the solution to precipitate a double salt of the dissolved metal sulfate and ammonium sulfate and separating the double salt from the remaining solution; the reactivated etching solution thus recovered is used as the etchant per se or is reconstituted with additional ammonium persulfate values.

3,399,091
METHOD OF BUILDING CONSTRUCTION AND REPAIR USING CHLORINATED POLYOLEFIN FLASHING
Clement J. Cornay and Gerard W. Daigre, Baton Rouge, La., assignors to The Dow Chemical Company, Midland, Mich., a corporation of Delaware
No Drawing. Filed Aug. 2, 1965, Ser. No. 476,667
3 Claims. (Cl. 156—71)

1. In the process of construction and repair of building structures, the improvement which consists in applying a protective covering of an inherently resilient thermoplastic sheet comprising a chlorinated olefin polymer prepared by the suspension chlorination of an olefin polymer having an essentially linear structure, said olefin polymer being selected from the group consisting of polyethylene and interpolymers composed of at least about 90 mole percent ethylene with the remainder being at least one ethylenically unsaturated comonomer; said chlorinated olefin polymer containing from about 25 to 50 weight percent of chemically combined chlorine and having a relative crystallinity of between about 15 and 28 percent when containing about 25 weight percent chlorine and a relative crystallinity of less than about 10 percent when containing about 34 or more weight percent chlorine; said sheet having a thickness of from about 0.005 to 0.25 of an inch, a tensile strength of at least about 1100 pounds per square inch, an elongation of between about 350 and 900 percent and a 100 percent modulus of between about 150 and 1500 pounds per square inch.

3,399,092
PROCESS OF MAKING IMPREGNATED FILTER TUBES
Edward R. Adams and Jim L. Shepherd, Lebanon, Ind., assignors to Commercial Filters Corporation, Lebanon, Ind., a corporation of New York
Filed Dec. 17, 1964, Ser. No. 419,105
3 Claims. (Cl. 156—74)

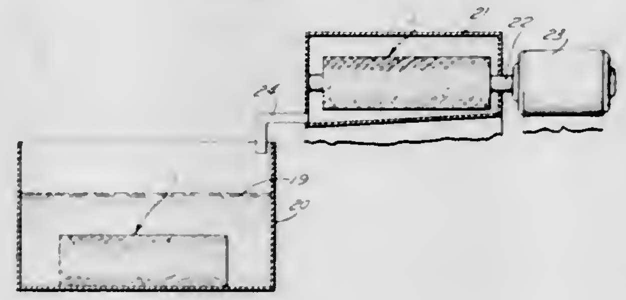

A method of making a filter element comprising winding a napped fibrous textile yarn in crisscross style on a removable mandrel in successive overlapping layers to form a porous filter tube having diamond shaped openings between the layers, saturating the tube in a solution containing a bonding agent, spinning the saturated tube to remove excess solution, drying the tube and curing the bonding agent, and removing the mandrel. To smooth down any fibers misplaced by the spinning action the filter tube may be passed through a sizing tube.

3,399,093
METHOD AND APPARATUS FOR THE MANUFACTURE OF VULCANIZED FIBER SHEET MATERIALS
William J. Brennan, Bridgeport, Pa., assignor to The Budd Company, Philadelphia, Pa., a corporation of Pennsylvania
Filed June 23, 1965, Ser. No. 466,311
5 Claims. (Cl. 156—76)

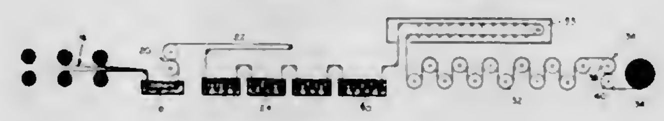

A pair of rollers is provided to receive a vulcanized fiber sheet material therebetween. One of the rollers is heated and the other is cooled. The material is kept under tension as it leaves the rollers.

3,399,094
METHOD FOR FORMING TUBULAR REINFORCED PLASTIC MEMBERS
Bruno B. Skoggard, Cold Spring Harbor, and William C. Post, Amityville, N.Y., assignors, by mesne assignments, to American Cyanamid Company, Wayne, N.J., a corporation of Maine
Original application Nov. 14, 1963, Ser. No. 323,763, now Patent No. 3,329,173, dated July 4, 1967. Divided and this application Jan. 25, 1967, Ser. No. 616,750
23 Claims. (Cl. 156—79)

A method for forming continuous lengths of reinforced plastic pipe by inflating an imperforate tube to form a core-mandrel to which reinforcing filaments and hardenable plastic are applied by winding. Other layers, internal and external, can also be applied. The core is inflated by a captured stationary fluid slug over which the core is moved. In its unhardened condition, the pipe can be flattened for storage and shipment and reinflated

under working pressures and cured in situ at a later time. At the time of curing, pressure across the thickness of the plastic-impregnated reinforcing filaments is obtained in

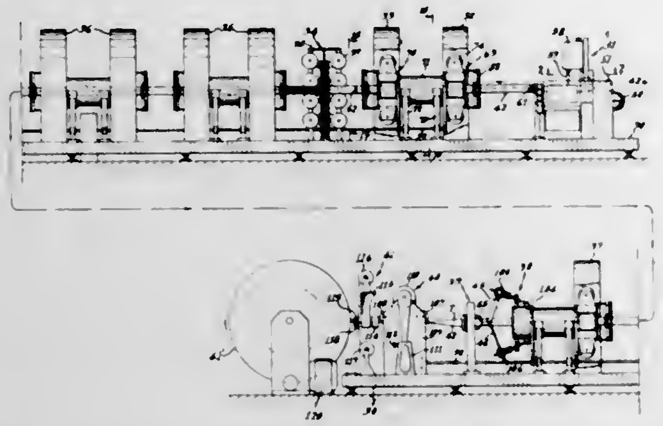

a manner akin to a matched die effect by including in the pipe construction an outer layer which imparts constricting forces.

3,399,095
METHOD AND APPARATUS FOR PRODUCING CONTAINERS OF TUBULAR FOAM LAMINATES
James W. Hyland, Jr., Maumee, Ohio, assignor to Owens-Illinois, Inc., a corporation of Ohio
Filed May 29, 1964, Ser. No. 371,203
6 Claims. (Cl. 156—79)

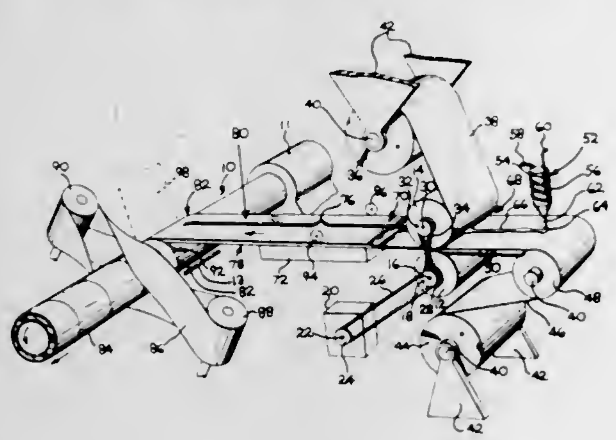

This invention relates to the container art; and more particularly to the production of containers of tubular foam laminates wherein the walls are inherently of cushioned construction, i.e., are made in the form of a laminate including a foamed resin inner layer and autogenously bonded cover films for high strength and/or as a fluid barrier on each surface.

3,399,096
METHOD AND APPARATUS FOR FORMING REINFORCED EDGES IN PACKAGING BLANKS
Hubert O. Ranger, Ossining, N.Y., assignor to St. Regis Paper Company, New York, N.Y., a corporation of New York
Filed Feb. 4, 1965, Ser. No. 430,417
30 Claims. (Cl. 156—202)

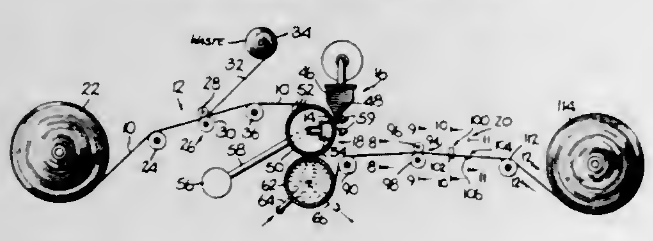

A method and apparatus for making packaging blanks including taking a plurality of webs of substrate material in parallel, spaced relationship, and adhering to the surfaces of the webs a film having a width substantially equal to the total width of all the spaced webs.

3,399,097
LABEL POSITIONING APPARATUS
John W. Vissage, Conyers, Ga., assignor to Lifetime Foam Products, Inc., Chicago, Ill., a corporation of Delaware
Filed Oct. 20, 1965, Ser. No. 498,510
7 Claims. (Cl. 156—583)

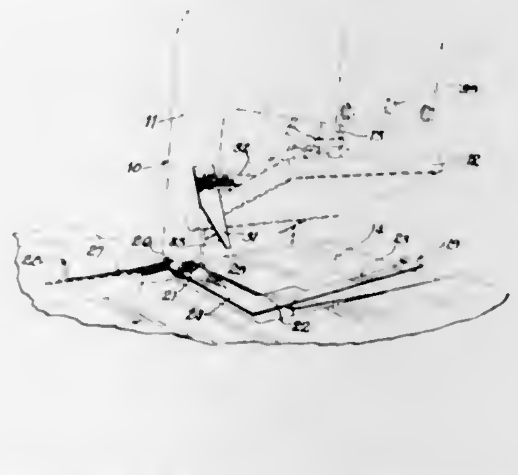

1. In combination with a pressing machine for labels having a reciprocating platen and a stationary presser plate cooperating with said platen, (a) a guide member normally disposed in superposed registering relation with said presser plate and being pivotable about an axis normal to said presser plate, and (b) cam means carried on said platen and arranged when said platen is moved in the direction of said presser plate to engage said guide member to move the same out of registration with said presser plate.

3,399,098
METHOD FOR PRODUCTION OF FOAMED POLYETHYLENE
Tokushichi Omoto, Tokyo, Michio Uchida, Yokohama, Takeshi Ogata, Yoshiya Fukakusa, Teruo Saito, Koshiro Saito, and Shozo Imoto, Tokyo, Kishizu Yokoyama, Kawasaki, and Ketzo Katagiri, Tokyo, Japan, assignors to Nippon Kakoh Seishi K.K., Tokyo, Japan
Filed Oct. 12, 1964, Ser. No. 403,091
Claims priority, application Japan, Oct. 17, 1963, 38/54,836
3 Claims. (Cl. 156—200)

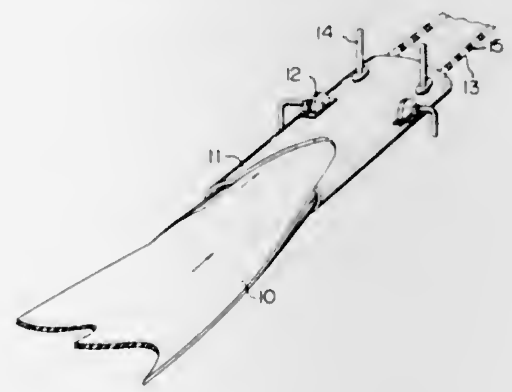

Method for making a foamed polyethylene using an aliphatic hydrocarbon, azobisisobutyronitrile and a CO_2 producing material as foaming agents. The foamed polyethylene can be bonded to cloth or paper to make a leather like sheet.

3,399,099
APPARATUS FOR WRAPPING TAPE AROUND A SUPPORT
William C. Kent, Gahanna, Ohio, assignor to Western Electric Company, Incorporated, New York, N.Y., a corporation of New York
Filed Aug. 12, 1963, Ser. No. 301,402
13 Claims. (Cl. 156—479)

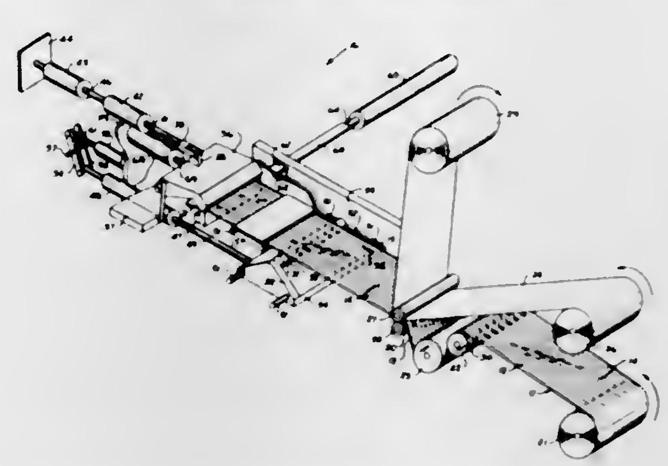

An apparatus for wrapping a plastic carrier tape, having spaced copper strips bonded to one surface thereof, around a flat support board composed of a nonconductive material.

3,399,100
APPARATUS FOR THE APPLICATION OF A SELF-ADHERING BAND TO A SURFACE
Hansjörg Rothenberger, 118 St. Georgenstrasse, St. Gall, Switzerland
Filed Mar. 25, 1965, Ser. No. 442,655
Claims priority, application Switzerland, Apr. 10, 1964, 4,669/64
5 Claims. (Cl. 156—523)

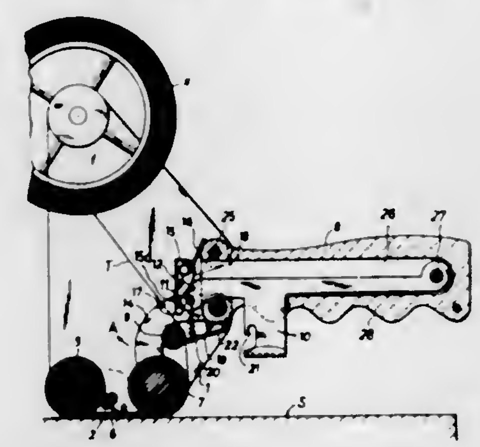

An apparatus for applying a tape to an object wherein there is a stationary pressure roller and a movable second pressure roller. Between such two rollers a cutting knife is positioned so that when the movable pressure roller is in lower position the tape is removed from the knife and when the movable pressure roller is in a second position the tape is brought into contact with the knife and cut. Means are provided whereby the movable pressure roller may be held in the position holding the tape away from the knife and means are also provided for releasing such holding action of the movable pressure roller so that the movable pressure roller pivots to allow the tape to be cut by the knife.

3,399,101
VALLEY PRINTING EFFECTS AND METHOD OF PRODUCING SAME
Eugene A. Magid, 1610 Gloverly Lane, Rydal, Pa. 19046
Filed Aug. 11, 1964, Ser. No. 388,776
7 Claims. (Cl. 161—5)

This invention relates generally to improvements in ornamental sheeting, and embraces unique methods of manufacturing the same. It relates to an embossed ornamental sheeting which simulates valley printing, said sheeting comprising a multi-ply web of material, at least the outer ply of which is light permeable, said outer ply

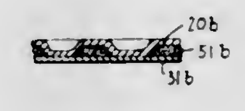

bearing on its underside a printed decoration which confronts a backing sheet to which it is bonded, said printed decoration being visible through the light permeable sheet in conforming relation with the valleys of the embossed composite sheet.

3,399,102
VAPOR PERMEABLE SYNTHETIC LEATHER PRODUCTS
Hideo Matsushita, Itami, and Ichiro Minobe and Yoshiaki Sakata, Osaka, Japan, assignors to The Toyo Rubber Industry Co., Ltd., Osaka, Japan
Continuation-in-part of application Ser. No. 377,077, June 22, 1964. This application Jan. 9, 1967, Ser. No. 608,166
Claims priority, application Japan, Dec. 27, 1963, 38/70,432
3 Claims. (Cl. 161—64)

A synthetic leather product is provided. A web of random fibers is placed on a fabric designed for napping. A composite is needled from the web side to unite the web layer with the fabric layer. The fabric layer is napped to obtain a napped surface having a higher fabric density than that of the web layer. The napped surface is coated with a solvent solution of a polyurethane polymer. The polymer is coagulated by immersing the coating in a nonsolvent for the polymer.

3,399,103
VIBRATION DAMPING COMPOSITION AND LAMINATED CONSTRUCTION
Ival O. Salyer, Dayton, Ohio, and George L. Ball III, Medford, Mass., assignors to Monsanto Research Corporation, St. Louis, Mo., a corporation of Delaware
Filed May 8, 1964, Ser. No. 365,877
19 Claims. (Cl. 161—68)

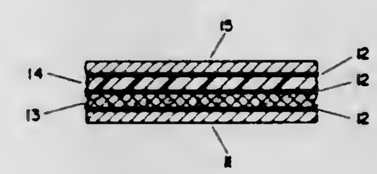

A material for damping or mitigating vibration, e.g. of ship hulls, which comprises a polymer composition consisting essentially of a vinyl halide/olefin copolymer and a plasticizer therefor and, as a filler, an inorganic solid in platelet form having a diameter of from 44 to 250 microns, the filler being present to the extent of 20% to 80% by weight of the composition.

3,399,104
VIBRATION DAMPING COMPOSITION AND LAMINATED CONSTRUCTION
George L. Ball III, Medford, Mass., and Ival O. Salyer, Dayton, Ohio, assignors to Monsanto Research Corporation, St. Louis, Mo., a corporation of Delaware
Continuation-in-part of application Ser. No. 224,699, Sept. 19, 1962. This application July 28, 1964, Ser. No. 385,587
12 Claims. (Cl. 161—68)

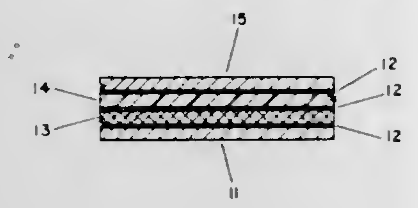

A material for damping or mitigating vibration, e.g., of ship hulls, which comprises a polymer composition consisting essentially of a vinyl halide/vinyl alkanoate copolymer and a plasticizer therefor and, as a filler, a mixture of pulverulent carbon black and graphite platelets having a diameter of from 10 to 250 microns, the proportion of carbon black in said mixture being from 1 to 60 parts by weight with the balance of said mixture being said graphite, and the proportion of filler being from 10 to 500 parts of filler per 100 parts by weight of the polymer composition.

3,399,105
UNFOLDABLE THERMOPLASTIC SHEET
Peter Breidt, Jr., Midland, and Lloyd E. Lefevre, Bay City, Mich., assignors to The Dow Chemical Company, Midland, Mich., a corporation of Delaware
Continuation-in-part of application Ser. No. 571,657, Mar. 24, 1966. This application Oct. 5, 1967, Ser. No. 675,274
3 Claims. (Cl. 161—102)

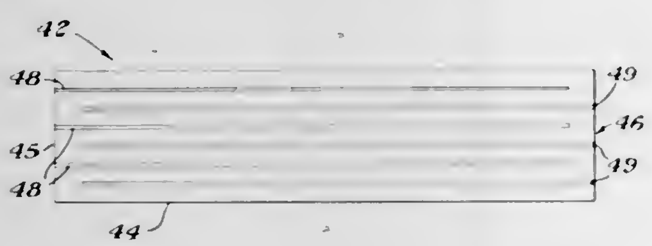

A foliated plastic sheet of thermoplastic resinous material is disclosed wherein the foliated sheet may be subsequently unfolded to provide a sheet having a width much greater than the die from which it was extruded.

3,399,106
EMBOSSED RESINOUS COMPOSITIONS AND PROCESS FOR PREPARING SAME
Leon B. Palmer, Little Falls, and Robert P. Conger, Park Ridge, N.J., assignors to Congoleum-Nairn Inc., Kearny, N.J., a corporation of New York
Filed Jan. 3, 1966, Ser. No. 518,073
15 Claims. (Cl. 161—119)

1. A process for producing a resinous layer having an embossed surface, which comprises applying a composition containing a blowing agent to portions of the surface of a layer of resinous composition containing an accelerator which substantially lowers the decomposition temperature of said blowing agent, said blowing agent being soluble in at least one component of said resinous composition, allowing a portion of said blowing agent on the surface of said layer to migrate into said layer and contact said accelerator, heating said layer to decompose the portion of the blowing agent in said layer without decomposing the remaining portion of the blowing agent on the surface of said layer thereby forming raised areas on the surface of said layer which correspond to the areas

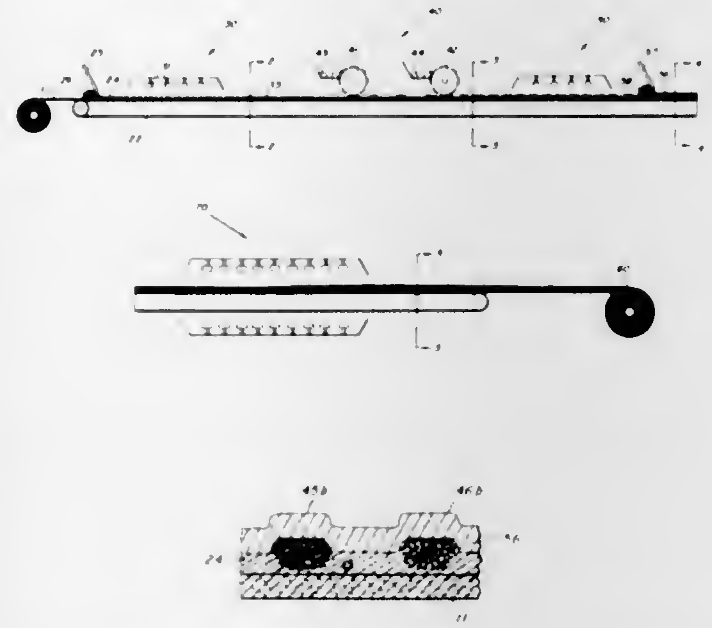

of application of said blowing agent and thereafter cooling the product thus formed.

12. A resinous composition layer having an embossed surface, which comprises a layer of resinous composition having raised areas on its surface, each of said raised areas corresponding to a cellular foam area within said layer and having on its surface undecomposed blowing agent.

3,399,107
CELLULAR FOAM COMPOSITION AND PROCESS FOR ITS PREPARATION
John Biskup, Chatham, and Norman R. Migdol, Carteret, N.J., assignors to Congoleum-Nairn Inc., Kearny, N.J., a corporation of New York
Filed Apr. 13, 1964, Ser. No. 359,052
18 Claims. (Cl. 161—160)

The invention relates to a method for producing a cellular foam product which has a high degree of indent recovery and to the resultant product thus produced. This result is achieved by incorporating in a foamable composition containing a chemical blowing agent, prior to decomposition of the blowing agent, a polymer of a methacrylate ester containing at least 7 carbon atoms and thereafter heating the composition to decompose the blowing agent and form a foamed layer.

3,399,108
CRIMPABLE, COMPOSITE NYLON FILAMENT AND FABRIC KNITTED THEREFROM
Earl Herbert Olson, Wilmington, Del., assignor to E. I. du Pont de Nemours and Company, Wilmington, Del., a corporation of Delaware
Continuation-in-part of application Ser. No. 335,187, Jan. 2, 1964, which is a continuation-in-part of application Ser. No. 202,611, June 14, 1962, which in turn is a continuation-in-part of application Ser. No. 132,449, Aug. 18, 1961. This application June 18, 1965, Ser. No. 465,121
13 Claims. (Cl. 161—173)

A crimpable composite filament in which one component is a crystalline homopolyamide and the other a nonisomorphic random copolyamide containing at least 20% of two polymer units. Its high crimp retractive force leads to improvements in stretch hosiery.

3,399,109
EPOXY MODIFIED VINYL COPOLYMERS OF α,β-UNSATURATED DICARBOXYLIC ACID PARTIAL ESTERS
Robert L. Zimmerman and Lieng-Huang Lee, Midland, Mich., assignors to The Dow Chemical Company, Midland, Mich., a corporation of Delaware
No Drawing. Continuation-in-part of application Ser. No. 97,731, Mar. 23, 1961. This application Aug. 19, 1966, Ser. No. 573,498
8 Claims. (Cl. 161—184)

This application relates to epoxy compositions containing homogeneous copolymers of vinyl aromatic compounds and α,β-unsaturated dicarboxylic acid partial esters which are useful as coatings having excellent stain, detergent and solvent resistance.

3,399,110
RECOVERY OF FIBROUS MATERIAL FROM WASTE WATERS OF THE PAPER, CARDBOARD AND CELLULOSE INDUSTRY BY ADDITION OF CONDENSATION OF UREA AND AN ALKYLENEIMINE
Hans Sommer, Hofheim, Taunus, Herbert Bestian, Frankfurt am Main, and Dieter Bergmann, Munchberg, Upper Franconia, Germany, assignors to Farbwerke Hoechst Aktiengesellschaft vormals Meister Lucius & Bruning, Frankfurt am Main, Germany, a corporation of Germany
No Drawing. Filed Mar. 11, 1965, Ser. No. 439,092
Claims priority, application Germany, Mar. 14, 1964, F 42,338
2 Claims. (Cl. 162—190)

Fibrous material is recovered from waste waters in the paper, cardboard and cellulose industry, by adding to the waste water a nitrogenous product obtained by condensation of urea and an 1,2-alkylene imine or oligomer thereof having a substitutable hydrogen atom at the nitrogen atom, the nitrogenous product being added in an amount between 0.1 and 4% by weight of the solid and suspended particles.

3,399,111
SUPPLEMENTAL BELT IN COMBINATION WITH AN ENDLESS BELT IN PAPERMAKING AND METHOD OF INSTALLING THE SUPPLEMENTAL BELT
Ralph H. Beaumont, Greensboro, N.C., and Donald R. Christie, Troy, John Okrepkie, Watervliet, and Dan B. Wicker, Loudonville, N.Y., assignors to Huyck Corporation, Rensselaer, N.Y., a corporation of New York
Continuation-in-part of applications Ser. No. 283,828, May 28, 1963 and Ser. No. 316,350, Oct. 16, 1963. This application Dec. 1, 1966, Ser. No. 610,721
9 Claims. (Cl. 162—199)

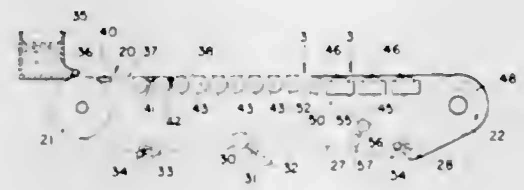

This invention relates to papermaking and more particularly to a supplemental belt for use in conjunction with a web carrying belt in a paper machine, and to a method of producing and installing such supplemental belt on the machine. The supplemental belts disclosed herein as illustrative embodiments of the invention are fabricated from perforated polyethylene terephthalate film or other polymeric sheet material and are arranged to move in an endless path inside a Fourdrinier screen or a papermakers' wet felt to facilitate the removal of moisture therefrom. The ends of the supplemental belt are joined through the use of ultrasonic techniques, preferably after the belt has been positioned along its endless path, and one or both surfaces of the belt is modified to increase its resistance to slippage. In some cases the modifications comprise channels or protuberances on the surface of the belt, while in other embodiments a woven textile fabric, an open cell foam or a nonwoven fibrous batt is laminated to the surface to provide the modifications.

3,399,112
SHEATHED FUEL ELEMENTS FOR NUCLEAR REACTORS
John Alan Dodd, Warrington, England, assignor to United Kingdom Atomic Energy Authority, London, England
Filed May 17, 1967, Ser. No. 639,087
Claims priority, application Great Britain, May 26, 1966, 23,699/66
2 Claims. (Cl. 176—79)

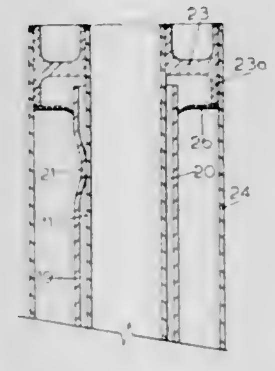

A fuel element for a nuclear reactor has a vent path for the removal from the element of the gases released from the fuel in service. This vent path comprises an extension of the fuel element sheath and this extension is enshrouded by a hood to form a diving bell gas trap. Situated in this diving bell gas trap is a non-return valve in the form of a metallic cup closure having a lip, the lip being so directed as to oppose flow towards the fuel but allow flow in the opposite direction.

3,399,113
PROPAGATION OF ICH VIRUS IN SWINE-LUNG TISSUE CULTURE
Victor Jack Cabasso, Pearl River, N.Y., assignor to American Cyanamid Company, Stamford, Conn., a corporation of Maine
No Drawing. Filed Aug. 16, 1965, Ser. No. 480,189
3 Claims. (Cl. 195—1.3)

1. A method for preparing infectious canine hepatitis vaccine which comprises the steps of consecutive serial passage of ICH virus isolated from a dog suffering from hepatitis through dog kidney tissue culture for about 24 consecutive passages and then in swine kidney tissue for about 35 consecutive passages until the virus became avirulent for dogs but retained full antigenicity for the production of antibodies in susceptible animals, and then serial passage of the ICH vaccine through at least three consecutive further serial passages in swine lung tissue.

3,399,114
PROCESS FOR PRODUCING L-GLUTAMIC ACID BY USING BACTERIA
Takeyoshi Ohsawa, Mitsuru Shibukawa, and Hideomi Takahashi, Nobeoka-shi, Japan, assignors to Asahi Kasei Kogyo Kabushikikaisha, Osaka, Japan
No Drawing. Filed Aug. 16, 1965, Ser. No. 480,095
Claims priority, application Japan, Aug. 22, 1964, 39/47,663
11 Claims. (Cl. 195—47)

A process for accumulating L-glutamic acid by inoculating a biotin-requiring L-glutamic acid-producing bac-

terium selected from the group consisting of *Microbacterium flavum* var. *glutamicum*, Brevibacterium genus, *Brevibacterium dibalicutum*, Micrococcus genus, *Micrococcus glutamicus*, and Corynebacterium genus into a culture medium containing molasses containing an excess of biotin as a main carbon source, by adding a polyoxyethylene fatty acid ester type surfactant into said medium at the initial stage of the logarithmic growth phase of said bacterium and by further adding an alkylamine salt type cationic surfactant into the medium at the proper time of between the middle and the end stages of the logarithmic growth phase of said bacterium.

3,399,115
QUALITATIVE BACTERIA CULTURE MEDIUM IDENTIFICATION
Walter M. Sellers, Jr., 525 S. Pinto St., San Antonio, Tex. 78207
No Drawing. Filed Feb. 14, 1966, Ser. No. 528,026
3 Claims. (Cl. 195—103.5)

1. The qualitative bacteria culture medium identification composition per liter that is substantially:

Water	ml	1000
Sodium chloride	grams	2.0
Sodium nitrate	do	1.0
Sodium nitrite	do	0.35
D-mannitol	do	2.0
L-arginine	do	1.0
Yeast extract	do	1.0
Magnesium sulfate $7H_2O$	do	1.5
Potassium phosphate $3H_2O$ (dibasic)	do	1.0
Bacto peptone	do	20.0
Phenol red	do	0.008
Brom thymol blue	do	0.040
Bacto agar pH adjusted to 6.7	do	15.0

3,399,116
LABORATORY-SCALE FLASH STILL FOR PETROLEUM OIL FRACTIONS
Jule J. Du Bois, Schenectady, N.Y., and John A. Glover, Munster, and Robert J. Buehler, Whiting, Ind., assignors to Sinclair Research, Inc., New York, N.Y., a corporation of Delaware
Filed Jan. 17, 1966, Ser. No. 521,165
5 Claims. (Cl. 196—98)

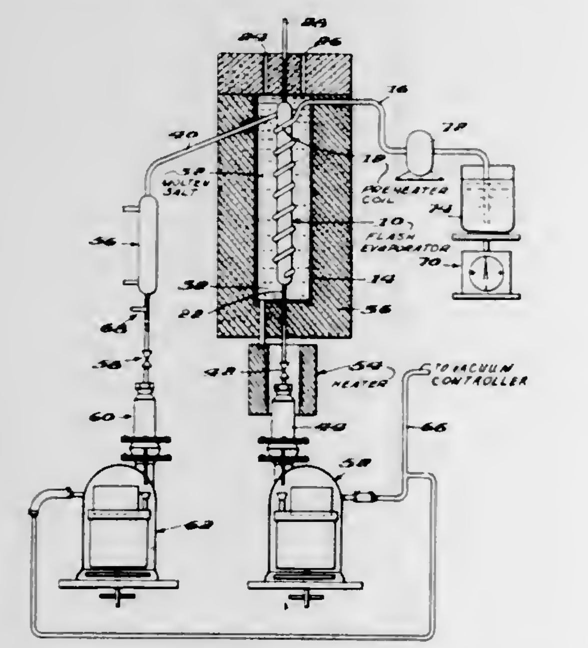

A laboratory scale flash still, employing a preheating coil surrounding a flash chamber with dual removing means, the preheating coil and flash chamber being substantially immersed in a molten salt heating medium, and means for maintaining the dual removing means at equal subatmospheric pressures.

3,399,117
TUBE FOR TUBE HEATER
Kurt W. Fleischer, Ambler, and Robert M. Breckenridge, Maple Glen, Pa., assignors to Selas Corporation of America, a corporation of Pennsylvania
Filed Nov. 16, 1966, Ser. No. 594,707
4 Claims. (Cl. 196—117)

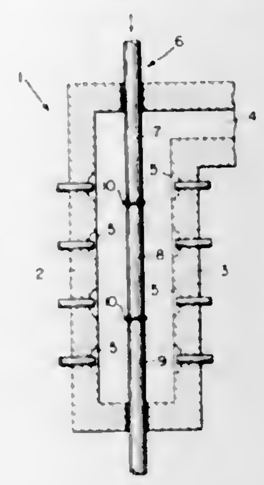

A reforming furnace having tubes made in sections of successively higher alloys as the fluid being treated is subjected to increasingly severe heating.

3,399,118
MULTISTAGE FLASH DISTILLATION APPARATUS
William R. Williamson, Waterford, Conn., assignor to American Machine & Foundry Company, a corporation of New Jersey
Filed Mar. 17, 1965, Ser. No. 440,486
Claims priority, application Great Britain, Mar. 20, 1964, 11,954/64
13 Claims. (Cl. 202—173)

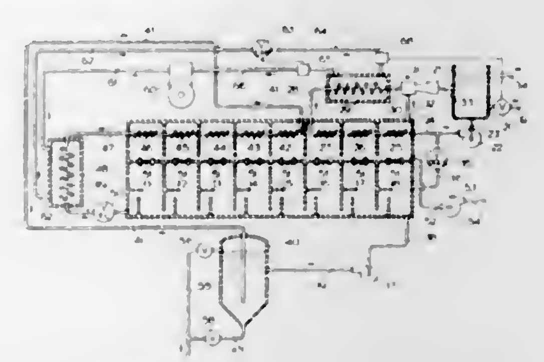

1. In a multistage distillation apparatus comprising, in combination, a succession of connected stages each having a flash evaporator section, said connected stages having a high temperature end and a low temperature end, condensing coils in each of said stages, an evaporator for a secondary heat transfer fluid, pipe means conducting fluid to be distilled through said evaporator and through at least some of said condensing coils, a condenser for a secondary heat transfer fluid through which fluid to be distilled passes from said condensing coils, means returning fluid from said condenser to the high temperature end of said connected stages to successively flash into vapor in said stages, a compressor, and an expansion valve, said compressor pumping a secondary heat transfer fluid from said evaporator to said condenser and said expansion valve being connected between said condenser and said evaporator, an eductor, and pump means removing distillate from the low temperature end of said connected stages, second pump means for removing unevaporated fluid from the low temperature end of said connected stages, and for recirculating said fluid through said eductor, said eductor in addition drawing non-condensibles from the low temperature end of said connected stages.

3,399,119
REACTION AND DISTILLATION PROCESS FOR N-CONTAINING SOLVENTS FROM MIXTURES THEREOF WITH HYDROGEN HALIDES
David W. Hall, Englewood, and Edward Hurley, Jr., Littleton, Colo., assignors to Marathon Oil Company, Findlay, Ohio, a corporation of Ohio
No Drawing. Filed July 8, 1966, Ser. No. 563,695
13 Claims. (Cl. 203—38)

The present invention comprises a process for the separation of basic organic nitrogen-containing solvents having a base constant in the range of from about 10^{-11} to about 10^{-18} and comprising N-lower alkyl-2-pyrrolidone, said basic organic solvents having the property of reacting with hydrogen halides to form salts, from mixtures containing such basic organic solvents in admixture with substantially anhydrous hydrogen halides comprising in combination the steps of adding to said mixtures mono- or polyhydric aliphatic alcohols in a quantity sufficient to provide at least one mole of OH groups for each mole of $H+$ groups contained in said hydrogen halides, thereafter heating the resulting mixture to cause the alcohol to react with the halide to form the corresponding alkyl halides and thereafter heating said mixture to a temperature sufficiently high to distill off alkyl halides thus formed.

3,399,120
PURIFICATION OF OLEFINICALLY UNSATURATED NITRILES BY WATER EXTRACTIVE DISTILLATION
Gordon H. Lovett, Texas City, Tex., assignor to Monsanto Company, St. Louis, Mo., a corporation of Delaware
Filed Dec. 9, 1965, Ser. No. 512,651
7 Claims. (Cl. 203—84)

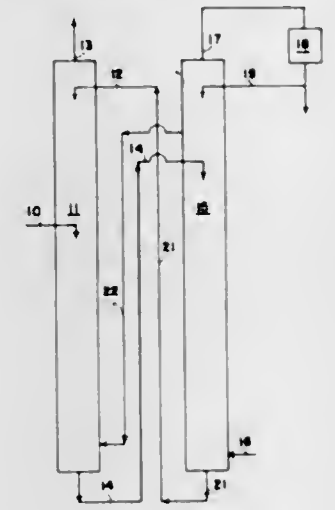

A process and an apparatus for purifying crude olefinically unsaturated nitriles by extractively distilling the crude nitrile in the presence of water by means of which process and apparatus rich solvent water from the extractive distillation zone is introduced into a stripping zone where the water is recovered for reuse in the extractive distillation and from which stripping zone vapors are removed above the midpoint thereof and returned to the lower portion of the extractive distillation zone as a means of supplying heat to said extractive distillation zone.

3,399,121
ANODIC PRINTING BY MEANS OF A HYDROGEN ION SENSITIVE PRECIPITATION REACTION
Gerhart P. Klein, Manchester, Mass., assignor to P. R. Mallory & Co., Inc., Indianapolis, Ind., a corporation of Delaware
Filed Nov. 18, 1964, Ser. No. 412,164
4 Claims. (Cl. 204—2)

A recording media consisting of a paper sheet impregnated with an aqueous solution of potassium chromate and an alcoholic solution of o-tolidine.

3,399,122
ELECTRODEPOSITION OF A MAGNETOSTRICTIVE MAGNETIC ALLOY UPON A CHAIN-STORE ELEMENT
Charles Le Mehaute, Saint-Laurent-du-Var, and Edouard Rocher, Antibes, France, assignors to International Business Machines Corporation, Armonk, N.Y., a corporation of New York
Filed Sept. 8, 1965, Ser. No. 485,781
Claims priority, application France, Sept. 10, 1964, 7,463
7 Claims. (Cl. 204—24)

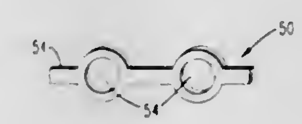

2. A process for electroplating an essentially zero magnetostrictive film on a substrate having a geometry of a chain-like configuration, comprising:
providing an aqueous electrolyte containing nickelous sulfate in a concentration from about 225 to about 275 grams/liter, ferrous sulfate in a concentration from about 0.7 to 6.0 grams/liter, where said ratio of nickel ion concentration to ferrous ion concentration is maintained between 50:1 and 80:1, an amount up to about 700 milligrams/liter of sodium palladichloride and up to about 24 grams/liter of cobalt sulfate, and said electrolyte is at a pH between 2.6 to 3;
immersing said substrate of chain-like configuration in said electrolyte as a cathode;
maintaining the temperature of said electrolyte between 10° to 23° C.; and
applying a potential of up to 1050 millivolts between said cathode and a reference electrode for a brief period to depassivate said cathode surface to provide nucleating sites for nickel and iron ions on the surface thereof, and, thereafter lowering said potential to a value between 910 to 980 millivolts until said magnetic film is formed over said cathode surface.

3,399,123
ELECTROLYTES AND METHOD FOR ELECTROPLATING NICKEL
Frank Passal, Detroit, Mich., assignor to M & T Chemicals Inc., New York, N.Y., a corporation of Delaware
No Drawing. Filed June 22, 1965, Ser. No. 466,086
14 Claims. (Cl. 204—49)

In accordance with certain of its aspects, this invention relates to novel compositions and to a process for electroplating nickel onto a basis metal which comprises passing current from an anode to a basis metal cathode through an aqueous acidic nickel plating solution containing at least one nickel compound providing nickel ions for electroplating nickel, a primary brightener, and as a secondary brightener a compound containing an anion of the structure:

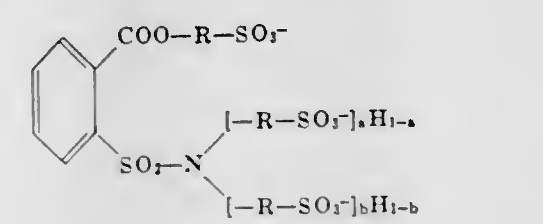

wherein *a* and *b* are each integers 0–1 and R is a hydrocarbon-di-yl moiety which contains at least 2 carbon atoms.

3,399,124
ELECTROLYTIC PREPARATION OF POLY-p-XYLYLENES
Heinrich G. Gilch, Plainfield, N.J., assignor to Union Carbide Corporation, a corporation of New York
No Drawing. Filed Sept. 17, 1964, Ser. No. 397,316
30 Claims. (Cl. 204—72)

1. An electrolytic process for the preparation of poly-p-xylylenes having the general structure

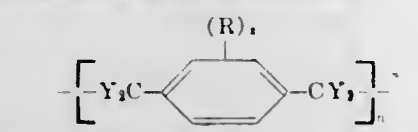

wherein Y is a member selected from the group consisting of hydrogen and halogens; R is an aromatic nuclear substitutent group; z is an integer from 0 to 4; and n is an integer of at least about 50, which comprises:

(1) admixing with an electrolyte an α-haloxylene compound having the general structure

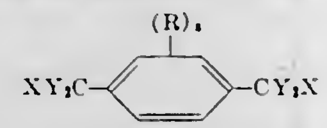

wherein Y is a member selected from the group consisting of hydrogen and halogens; R is an aromatic nuclear substituent group; X is a halogen having a bond strength no greater than that of Y with the proviso that when Y is fluorine, X is a halogen having a lower bond strength than fluorine; and z is an integer from 0 to 4;

(2) placing in the electrolyte composition an anode inert to the free halogens released during electrolysis and a cathode which exhibits an overvoltage sufficient to suppress the formation of hydrogen at the cathode;

(3) supplying an electromotive potential across said anode and cathode which results in a cathode potential sufficient to reduce said α-haloxylene compound; and

(4) recovering a poly-p-xylylene from the cathode.

3,399,125
ELECTROCHEMICAL MACHINING IN A PRESSURIZED CHAMBER SUBSTANTIALLY WITHOUT THE FORMATION OF GAS BUBBLES
Tomoyoshi Mikoshiba and Eiichi Hori, Kokubunji-shi, Shingo Ishizawa, Hachioji-shi, and Yasuo Suzuki, Hino-shi, Japan, assignors to Kabushiki Kaisha Hitachi Seisakusho, Chiyoda-ku, Tokyo-to, Japan, a joint-stock company of Japan
Filed Jan. 25, 1965, Ser. No. 427,750
Claims priority, application Japan, Jan. 28, 1964, 39/3,804; Feb. 3, 1964, 39/5,230; July 3, 1964, 39/37,536
5 Claims. (Cl. 204—143)

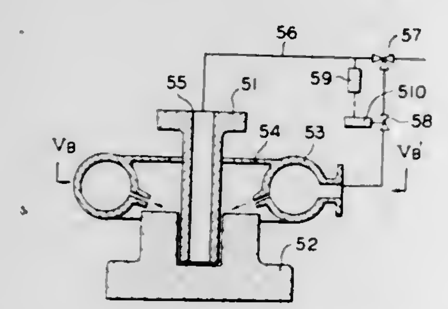

An electrochemical machining apparatus and method where the workpiece is machined in a pressurized chamber and the electrolyte flow is split into at least two streams. The individual pressure of the electrolyte at the workpiece is controlled by balancing the pressures of the individual streams as they are channelled to the pressurized chamber.

3,399,126
ELECTRODEPOSITION PROCESS AND APPARATUS HAVING CONDUIT ELECTRODES
Allen H. Turner, Ann Arbor, Mich., assignor to Ford Motor Company, Dearborn, Mich., a corporation of Delaware
Filed Nov. 2, 1964, Ser. No. 407,986
8 Claims. (Cl. 204—181)

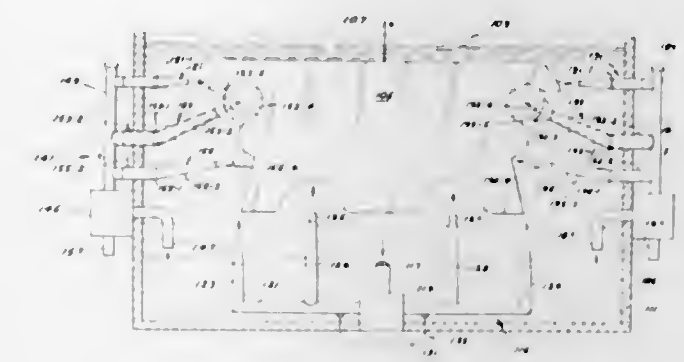

Method and means for coating wherein an electrically conductive object serving as a first electrode is provided with an electrically induced coating within an aqueous coating bath having an organic coating material dispersed therein by providing a direct current flow of electrical energy through said bath between said first electrode and a second electrode in electrical communication with said bath characterized by passing said first electrode along a predetermined path through said bath and discharging a plurality of spaced apart aqueous streams from one or more conduit electrodes against said first electrode beneath the surface of said bath while said first electrode traverses said path.

3,399,127
ELECTROPHORESIS MEDIUM USING AGAROSE AND CARRAGEENAN
Royden N. Rand, Pittsford, N.Y., and George P. Mueller, Camden, Maine, assignors, by direct and mesne assignments, to Bausch & Lomb Incorporated, Rochester, N.Y., a corporation of New York
Filed May 21, 1965, Ser. No. 457,660
9 Claims. (Cl. 204—180)

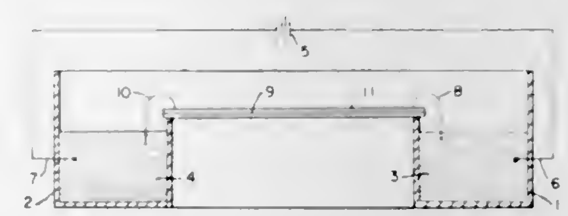

1. A medium for use in electrophoresis comprising, an electrophoretic buffer solution, agarose, and carrageenan.

3,399,128
ELECTRODEPOSITION PROCESS AND APPARATUS HAVING A MOVABLE CONDUIT ELECTRODE
George E. F. Brewer, Novi, and Gilbert L. Burnside, Oak Park, Mich., assignors to Ford Motor Company, Dearborn, Mich., a corporation of Delaware
Filed Nov. 2, 1964, Ser. No. 408,016
8 Claims. (Cl. 204—181)

A method for electrodepositing film-forming, organic, coating material upon electrically-conductive objects which comprises immersing said objects in a coating bath in contact with a first electrode and comprising an aqueous dispersion of film-forming, organic, coating material, passing said objects through said bath and removing said objects from said bath, each of said objects while passing through said bath serving as a second electrode, and providing a direct current of electrical energy through said bath and between said first electrode and said second electrode, said method being further characterized by moving

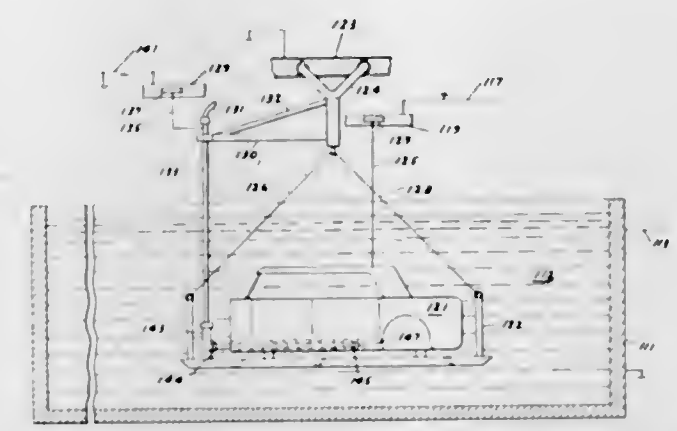

a conduit electrode through said bath with said second electrode and spaced apart therefrom, providing a direct current of electrical energy through said bath and between said conduit electrode and said second electrode, and forcing a stream of liquid coating material through said conduit electrode, into said bath, and against said second electrode; and means for carrying out said method.

3,399,129
SPUTTER DEPOSITION OF NICKEL-IRON-MANGANESE FERROMAGNETIC FILMS
Barry L. Flur and Andrew J. Griest, Burlington, Vt., assignors to International Business Machines Corporation, Armonk, N.Y., a corporation of New York
Filed Nov. 15, 1965, Ser. No. 507,847
2 Claims. (Cl. 204—192)

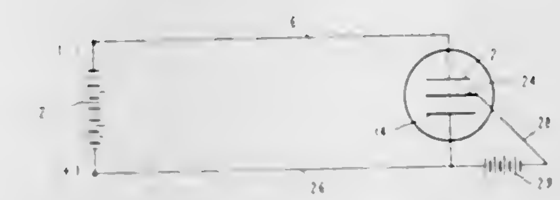

1. A process for forming a magnetic thin film from the nickel-iron-manganese ternary alloy system by cathodically sputtering comprising the steps of:

providing two electrodes in approximately parallel spaced relationship one to the other in an enclosure;

mounting on the face of one electrode a thin ferromagnetic target comprising 70 to 80 percent by weight nickel, 10 to 20 percent by weight iron, and 3 to 20 percent by weight manganese;

placing in proximity to the face of said second electrode, the anode, a substrate where said substrate is spaced from the face of said anode by way of a support;

reducing the pressure within said enclosure to a predetermined level;

injecting a source of gaseous material between said first and said second electrode;

applying a potential between said target and said anode while applying an electrical bias to the sputtered film collecting on the substrate to maintain said sputtered film at a negative potential with respect to the anode but at a positive potential with respect to said target, the application of said potentials between said target and said anode, causing the gaseous material to bombard the thin ferromagnetic target and sputter material from the target, which sputtered material collects on the substrate thereby forming a magnetic thin film characterized by uniform magnetic properties and simultaneously inducing a magnetic field substantially parallel at the surface of said substrate and through sputtered material.

3,399,130
APPARATUS FOR ELECTROLYTICALLY SHARPENING THE EDGES OF A CONTINUOUS STRIP
Barry William Lovekin, Langley, England, assignor to Wilkinson Sword Limited, London, England, a British company
Filed Apr. 26, 1965, Ser. No. 450,718
Claims priority, application Great Britain, May 14, 1964, 20,032/64
2 Claims. (Cl. 204—206)

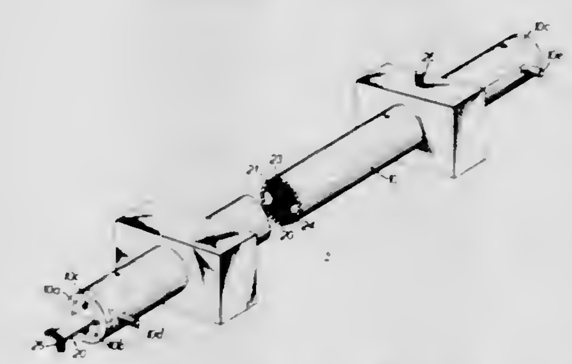

The invention provides a method of forming the cutting edges on razor blades by passing the razor blade material through an electrolyte whilst the material is maintained at an anodic potential. The major portion of the central area of the material is masked so that current flows from each unmasked edge into the electrolyte. For mass production, current densities of the order of 200 amps per square inch at the edge of the material are employed together with high flow rates of electrolyte, such as 30 gallons per minute under a high-pressure, such as 100 lbs. per square inch.

3,399,131
AQUEOUS ELECTROLYSIS CELL FOR SALINE SOLUTIONS, ESPECIALLY OF ALKALI CHLORIDES
Edouard Krebs, 1 Rue Perronet, Neuilly-sur-Seine, France, and Paul Staib, 37 Rue Decamps, Paris, France
Continuation-in-part of application Ser. No. 463,642, June 14, 1965. This application Jan. 24, 1966, Ser. No. 522,484
Claims priority, application France, Aug. 5, 1965, 27,404
5 Claims. (Cl. 204—220)

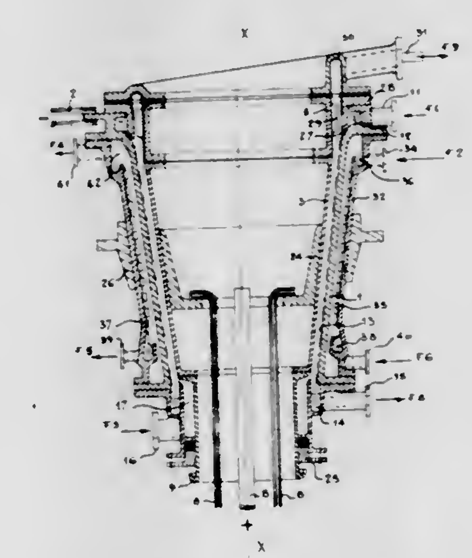

1. In an installation for the electrolysis of saline solutions, especially of equeous solutions of alkali chlorides, of the type comprising on the one hand an electrolysis cell

in which a film of mercury in circulation is utilized as a cathode and on the other hand accessory apparatus necessary for the cycle of operation among which at least a decomposing device is provided for the decomposition of the amalgam formed between said mercury and the metal of the said solution to be electrolysed, the improvement which is constituted by:

a primary cell with a truncated form and a vertical axis, said primary cell comprising an inner anodic metallic surface and an outer cathodic metallic surface, said surfaces being coaxial surfaces of revolution and the said cathode surface having a frustoconical shape;

a decomposing device mounted coaxially with and surrounding the said primary cell and comprising an outer surface of revolution supporting internally a plurality of decomposition grates adapted to regenerate the mercury contained in said amalgam, and means for flowing said amalgam downwardly in a thin film between said grates and the cathode of the main cell.

3,399,132
HYDROCRACKING OF HYDROCARBONS WITH A CATALYST COMPOSITE COMPRISING NICKEL AND TIN ASSOCIATED WITH A POROUS ACIDIC INORGANIC OXIDE CARRIER
Bernard F. Mulaskey, Pinole, Calif., assignor to Chevron Research Company, San Francisco, Calif., a corporation of Delaware
Continuation-in-part of application Ser. No. 568,536, July 28, 1966. This application June 8, 1967, Ser. No. 645,855
17 Claims. (Cl. 208—111)

A novel catalyst composition of nickel, or compounds of nickel, and tin, or compounds of tin, composited with a porous inorganic oxide carrier, and converting hydrocarbons in the presence of hydrogen with the catalyst.

3,399,133
METHOD FOR DEVELOPING A CONTROL SIGNAL AND FLOCCULATING PROCESS EMPLOYING SAME
Walter F. Gerdes, Lake Jackson, and Hogan A. Randle, Angleton, Tex., assignors to The Dow Chemical Company, Midland, Mich., a corporation of Delaware
Filed Oct. 11, 1963, Ser. No. 315,562
20 Claims. (Cl. 210—42)

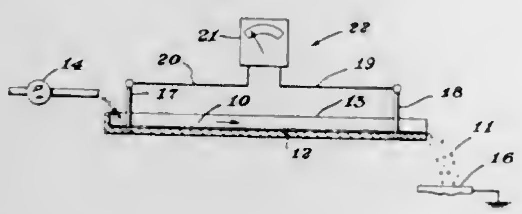

Processes are provided for developing a control signal related to the surface charge condition of solids in aqueous dispersion by flowing the aqueous dispersion over a dielectric surface and detecting through electrodes spaced apart at points along the flow path in direction of flow the rate of charge transport. The signal thus developed is used in flocculation processes to control the amount of charge influencing chemical added to the aqueous dispersion. One mode of operation involving alternately flowing the dispersion and a second aqueous medium over the dielectric surface yields a signal of significantly increased amplitude. Either voltage or current incidents of the charge transport may be measured. Measuring current has the advantage of being less sensitive to conductance of the aqueous dispersion. Preferably the conductance is less than that of an aqueous solution containing 100 parts per million of sodium chloride.

3,399,134
MAGNETIC SEPARATOR
Arthur C. Schouw, Corunna, and James R. Brown, Plymouth, Mich., assignors to Hydromation Engineering Company, Livonia, Mich.
Filed Oct. 27, 1966, Ser. No. 594,967
5 Claims. (Cl. 210—42)

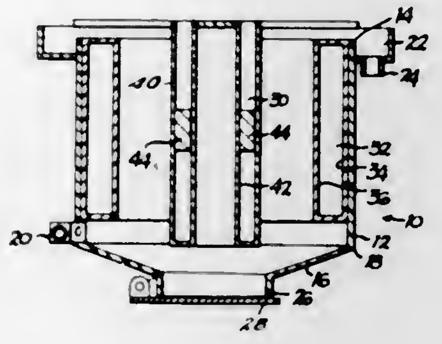

A magnetic separator including a circular tank having a bottom inlet and a top outlet, the bottom inlet being tangential to the side wall of the tank to impart a swirling motion to liquid entering the tank through the inlet, so that the liquid spirals upwardly through the tank. A plurality of electromagnets are supported along the flow path of the liquid by columns which provide collecting surfaces, and the electromagnets, when energized, establish magnetic fields in the flow path of liquid which attracts magnetic particles so that they deposit on the collecting surfaces. The particles are released from the collecting surfaces by reversing the magnetic fields, and the released particles are discharged from the tank through a discharge outlet. The method of the invention includes the steps of flowing a particle-containing liquid in an annular path defined by collecting surfaces, and subjecting the flowing liquid to a magnetic field which attracts the magnetic particles to the collecting surfaces. Particles are released from the collecting surfaces by reversing the magnetic field.

3,399,135
METHOD OF REMOVING SOLIDS FROM LIQUIDS
Walter R. Conley, Jr., Sigurd P. Hansen, Robert D. Schilling, Richard H. Evers, and Archie H. Rice, Corvallis, Oreg., assignors to Neptune Microfloc, Incorporated, Corvallis, Oreg., a corporation of Oregon
Continuation-in-part of application Ser. No. 553,401, May 27, 1966. This application Sept. 29, 1967, Ser. No. 675,742
6 Claims. (Cl. 210—42)

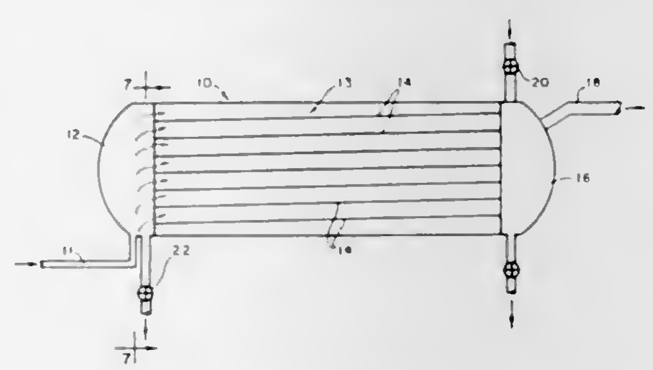

Liquid carrying solids is passed at slow rate through honeycomb of tubes of restricted diameter to permit solids to deposit within tubes. Restricted diameter of tubes causes self orificing to utilize complete storage capacity of tubes. Tubes cleaned by draining inlet plenum, tubes being inclined upwardly from such plenum.

3,399,136
REMOVAL OF BACTERIA FROM AQUEOUS LIQUIDS BY FILTRATION
George Richard Bell, Martinsville, N.J., assignor to Johns-Manville Corporation, New York, N.Y., a corporation of New York
No Drawing. Filed Oct. 20, 1965, Ser. No. 499,033
5 Claims. (Cl. 210—50)

Water contaminated with bacteria and viruses is purified by adding iron or aluminum compound in an amount sufficient to combine with substantially all of the bacteria and viruses, and then treating the water to remove the iron or aluminum ion. Iron or aluminum ion additions are preferably about 1 to 5 p.p.m. of water. A preferred technique for removing the iron or aluminum is to add a filter aid and a compound such as magnesium oxide which will unite with the iron or aluminum ion to form a substance which can be removed by filtration.

3,399,137
GENERATION OF LIGHT BY THE REACTION OF ANHYDRIDES OF OXALIC ACID WITH A PEROXIDE IN THE PRESENCE OF A FLUORESCER
Michael McKay Rauhut, Norwalk, Conn., and Laszlo Joseph Bollyky, New York, N.Y., assignors to American Cyanamid Company, Stamford, Conn., a corporation of Maine
No Drawing. Continuation-in-part of application Ser. No. 425,599, Jan. 14, 1965. This application Sept. 8, 1965, Ser. No. 485,920
16 Claims. (Cl. 252—188.3)

A composition for the production of chemiluminescent light, intermediate reactants which when reacted with other necessary reactants produce chemiluminescent light, and the chemiluminescent process comprising admixing reactants comprising an oxalic acid type; also, novel chemiluminescent reactant compounds.

3,399,138
TRIAZINES
Billy Dale Vineyard, St. Louis, Mo., assignor to Monsanto Company, St. Louis, Mo., a corporation of Delaware
No Drawing. Continuation-in-part of application Ser. No. 502,405, Oct. 22, 1965. This application Oct. 11, 1967, Ser. No. 674,656
7 Claims. (Cl. 252—33.6)

Lubricating oil compositions which exhibit detergent properties by the incorporation into a lubricating oil of certain triazine compounds which can be derived from polyalkenylsuccinic acids and dicyandiamide. The lubricating oil compositions have many uses among which are lubrication of internal combustion engines.

3,399,139
SYNTHETIC LUBRICANT COMPOSITION OF IMPROVED OXIDATION STABILITY
Alan D. Forbes, Knaphill, Woking, and Patrick Gould, Woodham, near Weybridge, England, assignors to The British Petroleum Company Limited, London, England, a corporation of England
No Drawing. Filed Jan. 17, 1966, Ser. No. 520,844
Claims priority, application Great Britain, Jan. 15, 1965, 1,866/65
6 Claims. (Cl. 252—37)

1. A lubricating composition consisting essentially of a blend of:

(a) a liquid aromatic ester base oil consisting of at least one diester having the general formula

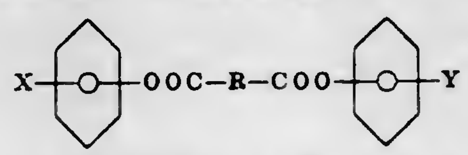

wherein R is a saturated hydrocarbon group having from 1 to 14 carbon atoms, X and Y are the same or different and each of said X and Y being selected from the group consisting of hydrogen, alkyl, aryl, alkyl-substituted aryl, diaryl, alkyl-substituted diaryl, aryloxy, alkyl-substituted aryloxy, diaryloxy, alkyl-substituted diaryloxy, and wherein the sum of the carbon atoms for X and Y does not exceed 14, and

(b) at least one organo-metallic compound selected from the group consisting of

(1) salts of carboxylic acids containing from 8 to 22 carbon atoms,

(2) chelates of beta di-ketones having the formula

$$R_1-\overset{\overset{\textstyle O}{\|}}{C}-CH_2-\overset{\overset{\textstyle O}{\|}}{C}-R_2$$

wherein R_1 and R_2 are selected from the group consisting of alkyl, cycloalkyl, and aromatic groups containing from 1 to 10 carbon atoms, and

(3) metal phthalocyanines, wherein the metal component of said organo-metallic compound is selected from the group consisting of metals of the first transition series according to the Periodic Table of Mendeleeff and cerium, said organo-metallic compound being present in an amount which produces a metal content of up to 500 p.p.m., based on the total weight of the lubricating composition.

3,399,140
LIQUID DEVELOPER FOR ELECTROSTATIC PRINTING
Frederick W. Fischer, Palos Heights, and Robert N. Cooper, Chicago, Ill., assignors to American Photocopy Equipment Company and The Sherwin-Williams Company, jointly, corporations of Illinois and Ohio, respectively
No Drawing. Filed Sept. 7, 1965, Ser. No. 485,549
4 Claims. (Cl. 252—62.1)

1. A process for developing a latent image on an electrostatically charged surface which comprises: contacting the charged surface with a liquid developer containing finely divided developer solids in a liquid component; said liquid component comprising a volatile high-resistivity aliphatic hydrocarbon or halogenated hydrocarbon solvent having a kauri-butanol value between about 20 and 45; and said developer solids consisting essentially of about 50 to 95 weight percent binder solids and about 5 to 50 percent pigment solids; said binder solids consisting essentially of about 50 to 95 percent asphalt and about 5 to 50 percent of binder resin selected from the group consisting of rosin, metal salts of rosin and mixtures of rosin and metal salts of rosin.

3,399,141
HETEROCYCLIC ESTERS OF ALKENYLSUCCINIC ANHYDRIDES
David H. Clemens, Willow Grove, Pa., assignor to Rohm and Haas Company, Philadelphia, Pa., a corporation of Delaware
No Drawing. Continuation-in-part of application Ser. No. 526,022, Feb. 9, 1966. This application Oct. 27, 1967, Ser. No. 678,549
11 Claims. (Cl. 252—47.5)

This invention is directed to novel heterocyclic esters of alkenylsuccinic anhydrides wherein the alcohol moiety of the ester contains a substituted 2-piperidone. This invention is also directed to lubricating oil and fuel compositions containing these heterocyclic esters of alkenylsuccinic anhydride.

3,399,142
MAGNETIC MATERIALS AND METHODS OF MAKING THE SAME
Robert F. Conley, Elizabeth, N.J., assignor to Georgia Kaolin Company, Elizabeth, N.J., a corporation of New Jersey
No Drawing. Filed Oct. 2, 1963, Ser. No. 313,169
5 Claims. (Cl. 252—62.63)

1. A process for producing a magnetic pigment of superior dispersing properties and magnetic characteristics comprising the steps of suspending a nonmagnetic oxide of iron in aqueous slurry, adding to the slurry a solution of a soluble soap, adding to the slurry containing the soap a soluble salt of an alkaline earth metal to form an insoluble soap, precipitating the insoluble soap formed by the addition of the alkaline earth metal salt, filtering, drying and heating to a temperature sufficient to initiate a gas evolving reaction in the mass, permitting the reaction to continue until completion in air and recovering the reacted precipitant as a magnetic pigment.

3,399,143
METHOD OF STRIPPING NICKEL FROM ARTICLES AND THE COMPOSITION USED THEREIN
Leo J. Slominski, Bristol, Conn., assignor to MacDermid Incorporated, Waterbury, Conn., a corporation of Connecticut
No Drawing. Continuation-in-part of application Ser. No. 403,934, Oct. 14, 1964. This application Aug. 2, 1967, Ser. No. 657,781
11 Claims. (Cl. 252—79.2)

Compositions for stripping nickel from plating racks and the like, and process of using such compositions, which compositions consist essentially of nitric or combinations of nitric and sulfuric acid catalyzed by the inclusion of chloride ions, wherein the criticality of the chloride ion concentration in such systems is substantially ameliorated by the further inclusion of iodate ions, preferably in the ratio of about 1:10 by weight relative to the chloride. The iodate inclusion has the added effect of suppressing nitrogenous fumes in the stripping reaction and has a synergistic effect in combination with the chloride on the stripping rate of the acid.

3,399,144
DEFOAMING AGENT
Harley D. Hathaway, Mason, and Bernard J. Heile, Cincinnati, Ohio, assignors to The Procter & Gamble Company, Cincinnati, Ohio, a corporation of Ohio
Filed Jan. 4, 1966, Ser. No. 518,652
11 Claims. (Cl. 252—99)

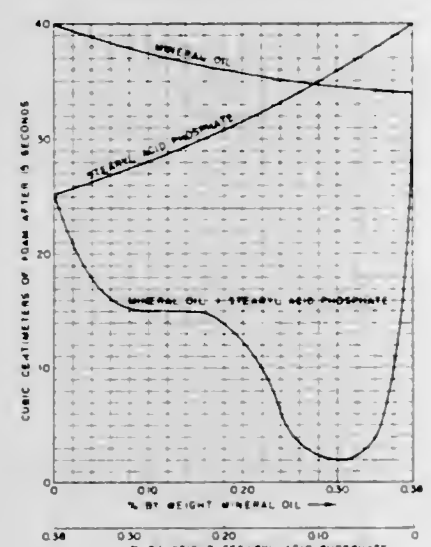

Defoaming agent suitable for use in detergent compositions, the defoaming agent comprising 5% to 95% mineral oil and 5% to 95% of monoalkyl or dialkyl acid phosphates wherein each alkyl chain contains from 16 to 20 carbon atoms.

3,399,145
DISPERSION OF FINELY DIVIDED SOLID IN NON-AQUEOUS LIQUID
Thomas W. Martinek, Crystal Lake, and Donald L. Klass, Barrington, Ill., assignors, by mesne assignments, to Union Oil Company of California, Los Angeles, Calif., a corporation of California
Filed Aug. 5, 1964, Ser. No. 387,691
1 Claim. (Cl. 252—309)

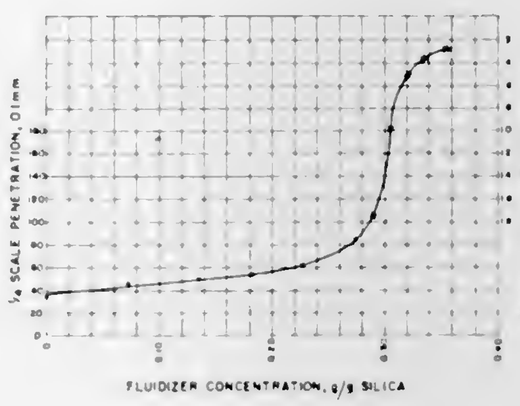

Finely divided boron dispersed in mineral oil and glycerol monooleate is used for electroviscous fluid.

3,399,146
SUBSTITUTED TRISULFONYLMETHANES IN A METHOD OF MODIFYING SURFACE PROPERTIES OF LIQUIDS AND SOLIDS
Clyde Stephen Scanley, Stamford, Conn., assignor to American Cyanamid Company, Stamford, Conn., a corporation of Maine
No Drawing. Application Dec. 21, 1964, Ser. No. 420,097, which is a continuation-in-part of abandoned application Ser. No. 324,184, Nov. 18, 1963. Divided and this application Aug. 31, 1965, Ser. No. 484,114
12 Claims. (Cl. 252—355)

This invention relates to a method of modifying the surface properties of liquids or solids such as metals by contacting said surface with substituted trisulfonylmethanes of the formula:

$$X^{(+y)}\left[\begin{array}{c} SO_2-R' \\ C-SO_2-R^2 \\ SO_2-R^3 \end{array}\right]^{(-)}_y \quad \text{and} \quad H-C\begin{array}{l} SO_2-R' \\ -SO_2-R^2 \\ SO_2-R^3 \end{array}$$

wherein X represents a cation selected from the group consisting of hydrogen, metal, amino and ammonium cations; R′ represents the functional group

$$-C_nH_{2n}-Z-C_mH_{2m+1}$$

with Z equal to a radical selected from the group consisting of methylene, phenylene, naphthylene, cyclohexylene, and oxy, with the provision that each of n and m must be a whole integer from 4 to 21; and R^2 and R^3 each represent a substituent selected from the group consisting of lower alkyl, phenyl, tolyl, cyclohexyl, and R′; and y is a whole integer from 1 to 4 provided that when each of R′, R^2, and R^3 is a lower alkyl that at least one lower alkyl chain includes at least five carbon atoms.

3,399,147
GAS MIXTURE FOR ELECTRIC FLASHTUBES
John L. Turner, Needham, Mass., assignor to EG & G, Inc., Bedford, Mass., a corporation of Massachusetts
No Drawing. Continuation-in-part of application Ser. No. 262,364, Mar. 4, 1963. This application May 18, 1966, Ser. No. 551,172
1 Claim. (Cl. 252—372)

Gas mixture for electric flashtubes consisting of 90% to 97% xenon, 2% to 9% hydrogen and 1% to 5% argon.

3,399,148
PLATINUM REFORMING CATALYST
Malden Ward Michael, Stamford, Conn., and Robert Matthew Debaun, Wayne, N.J., assignors to American Cyanamid Company, Stamford, Conn., a corporation of Maine
No Drawing. Filed Mar. 18, 1966, Ser. No. 535,329
6 Claims. (Cl. 252—463)

Process for preparing an alumina support for catalysts comprising acid leaching below about 29° C., and process for using a catalyst having such an alumina support.

3,399,149
POLYMERIZATION OF OXIRANE MONOEPOXIDES USING AN ORGANOMETALLIC COMPOUND WITH WATER AS COCATALYSTS
Kenneth T. Garty, Somerville, and Thomas B. Gibb, Jr., Murray Hill, N.J., assignors to Union Carbide Corporation, a corporation of New York
No Drawing. Filed July 1, 1959, Ser. No. 824,194
23 Claims. (Cl. 260—2)

1. Method for the production of a polymer of an epoxide compound which comprises contacting a monomeric oxirane monoepoxide, which is free of ester, acid, amino and aldehyde groups, with at least about 0.01 percent by weight, based on the weight of said oxirane monoepoxide, of an organometallic compound having the formula:

$$R_1-Me-R_2$$

wherein R_1 and R_2 are hydrocarbon radicals and Me is a metal of Group II of the Periodic Table, and with from about 0.01 to about 1.3 moles of water, per mole of said organometallic compound, whereby said oxirane monoepoxide polymerizes to form a polymer.

3,399,150
PROCESS FOR POLYMERIZING OLEFIN OXIDES AND CATALYST COMPOSITIONS COMPRISING AN ORGANO-METALLIC COMPOUND WITH A METAL CARBONATE OR SULFATE THEREFOR
Mitsuji Miyoshi and Shozo Tsuchiya, Kawasaki-shi, Tatsuo Kinoshita, Tokyo, and Takeo Koizumi, Kawasaki-shi, Japan, assignors to Nippon Oil Company, Limited, Tokyo, Japan
No Drawing. Filed Oct. 7, 1965, Ser. No. 493,928
Claims priority, application Japan, Oct. 15, 1964, 39/58,325
10 Claims. (Cl. 260—2)

A process for preparing propylene oxide homopolymer or copolymer which comprises polymerizing propylene oxide or copolymerizing propylene oxide with a 1,2-epoxide in the presence of a catalyst composition consisting of an organo metallic compound in which the metal is selected from Groups II and III of the Periodic Table and a carbonate or sulfate of zinc, magnesium, calcium, strontium or barium.

3,399,151
POLYURETHANE FOAM PREPARED FROM AN OXYALKYLATED POLYAMINO-1,3,5-TRIAZINE-ORGANIC POLYISOCYANATE REACTION PRODUCT
Donald W. Kaiser, Hamden, Conn., assignor to Olin Mathieson Chemical Corporation, a corporation of Virginia
No Drawing. Original application Sept. 10, 1964, Ser. No. 395,611, now Patent No. 3,330,830, dated July 11, 1967. Divided and this application Aug. 15, 1966, Ser. No. 581,668
3 Claims. (Cl. 260—2.5)

Oxyalkylation of polyamino-1,3,5-triazines is effected in the presence of a lower dialkyl sulfoxide solvent, the solvent is removed, and the resulting polyol is reacted with an organic polyisocyanate in the presence of a foaming agent and a catalyst to form a polyurethane foam having good flame retarding properties.

3,399,152
BLACK ACRYLIC COATING COMPOSITION
Robert F. Jamrog, Livonia, and Raymond S. Podlewski, Inkster, Mich., assignors to Interchemical Corporation, a corporation of Ohio
No Drawing. Continuation-in-part of application Ser. No. 265,041, Mar. 14, 1963. This application Apr. 14, 1967, Ser. No. 630,817
8 Claims. (Cl. 260—17)

An acrylic coating composition comprising a dispersion of a pigment in a solvent solution containing a film-forming copolymer of t-butylaminoethyl methacrylate and at least one other monomer containing a $CH_2=C<$ group.

3,399,153
SOLVENT-SOLUBLE, HEAT-HARDENING INTERPOLYMERS CONSISTING ESSENTIALLY OF ALKYLOLATED ACRYLAMIDES AND POLYETHYLENICALLY UNSATURATED POLYESTER RESINS
Kazys Sekmakas, Chicago, and Roland F. Stancl, Chicago Heights, Ill., assignors to De Soto Chemical Coatings, Inc., Chicago, Ill., a corporation of Delaware
No Drawing. Filed Apr. 9, 1963, Ser. No. 271,604
15 Claims. (Cl. 260—21)

1. A solvent-soluble, heat-hardening, non-gelled interpolymer of: (A) an acrylamide in an amount of from 2–50% by weight, based on the weight of the interpolymer; and (B) the balance of the interpolymer consisting essentially of polyethylenically unsaturated polyester; said interpolymer being reacted with from 0.2–5 equivalents of aldehyde per amide group in said interpolymer.

3,399,154
RIGID POLYURETHANE FOAMS AND POLYESTERS FOR USE THEREIN
Carl Bernstein, Deerfield, and Kermit Longley, Park Forest, Ill., assignors to Witco Chemical Company, Inc., New York, N.Y., a corporation of Delaware
No Drawing. Original application Oct. 22, 1965, Ser. No. 502,516, now Patent No. 3,298,974, dated Jan. 17, 1967. Divided and this application Jan. 16, 1967, Ser. No. 622,841
7 Claims. (Cl. 260—22)

Polyesters having particular utility for the preparation of rigid polyurethane foams, said polyesters comprising esterification reaction products of (a) a mixture of an aromatic dicarboxylic acid compound, e.g. phthalic anhydride, and a higher fatty acid, e.g. oleic acid, with (b) an ethylene oxide adduct of an aliphatic polyhydric alcohol containing at least 3 hydroxy groups, said adduct containing from 10 to 22 milli-equivalents, per gram, of hydroxyl groups, said polyester having an hydroxyl number between 400 and 600.

3,399,155
BLENDS OF RIGID VINYL CHLORIDE POLYMERS AND NON-POLAR ELASTOMERS
Massimo Baer, Longmeadow, and Ernest H. Hankey, Springfield, Mass., assignors to Monsanto Company, a corporation of Delaware
No Drawing. Continuation-in-part of application Ser. No. 256,244, Feb. 5, 1963, which is a division of application Ser. No. 800,911, Mar. 23, 1959, now Patent No. 3,085,082. This application May 19, 1966, Ser. No. 551,250
5 Claims. (Cl. 260—23)

There are disclosed improved vinyl chloride compositions provided by a blend of a rigid vinyl chloride polymer, a non-polar hydrocarbon elastomer and a surfactant in an amount sufficient to render the non-polar hydrocarbon elastomer compatible in the vinyl chloride polymer.

3,399,156
POLYPROPYLENE HAVING CONTROLLED SLIP
Gordon W. Bell, Jr., Wilmington, Del., assignor to Avisun Corporation, Philadelphia, Pa., a corporation of Delaware
No Drawing. Filed Sept. 30, 1965, Ser. No. 491,890
2 Claims. (Cl. 260—29.1)

1. A composition of matter consisting essentially of substantially crystalline polypropylene, and from about 0.05% to about 0.3% of a dimethyl silicone oil having a viscosity of from about 200 to about 10,000 centistokes, and from about 0.05% to about 0.3% of a silica having an average particle size of about 3.3 microns.

3,399,157
STABILIZATION OF ETHYLENE/VINYL CHLORIDE LATICES
Oliver de S. Deex, Clayton, and Charles E. Miles, Ballwin, Mo., assignors to Monsanto Company, St. Louis, Mo., a corporation of Delaware
No Drawing. Filed Jan. 6, 1965, Ser. No. 423,857
12 Claims. (Cl. 260—29.6)

1. In a process for preparing stable ethylene/vinyl chloride copolymer latices, said copolymer having a polymerized vinyl chloride content from about 60 to about 85% by weight of said copolymer, by adding to an ethylene-vinyl chloride monomer system a nonionic emulsifying agent having a HLB value of from about 10 to about 17 or an anionic emulsifying agent having a HLB value of at least about 10, the improvement comprising adding to said monomer system prior to polymerization from about 15% to about 95% by weight of the theoretical amount necessary to provide a monomolecular layer on the polymer solids of said emulsifying agent, and adding after polymerization a second quantity of emulsifying agent sufficient to bring the total emulsifier content to from about 25% to about 150% of said theoretical amount.

3,399,158
COALESCING AGENTS FOR EMULSION PAINTS
John Jackson Huitson, Banstead, Surrey, England, assignor to The Distillers Company Limited, Edinburgh, Scotland, a British company
No Drawing. Filed Mar. 26, 1965, Ser. No. 443,099
Claims priority, application Great Britain, Apr. 2, 1964, 13,580/64
6 Claims. (Cl. 260—29.6)

1. A copolymer emulsion paint which comprises an aqueous coating emulsion based on a copolymer of a monomer selected from the group consisting of vinyl acetate and alkyl acrylate with at least one other monomer and an effective amount of a diester of at least one aliphatic dicarboxylic acid selected from the group consisting of oxalic, malonic and succinic acids, said diesters having from 6 to 18 carbon atoms in the molecule, as a coalescing agent.

3,399,159
CATIONIC LATICES AND METHOD OF PREPARING SAME
Carlos M. Samour, Wellesley Hills, Mass., assignor to The Kendall Company, Boston, Mass., a corporation of Massachusetts
No Drawing. Continuation-in-part of application Ser. No. 457,526, May 20, 1965. This application Feb. 6, 1967, Ser. No. 614,002
15 Claims. (Cl. 260—29.6)

A process for preparing polymeric dispersions, free of surfactants or conventional dispersing agents, and in which the polymer is cationically charged, which comprises polymerizing at a controlled rate in an acid medium a mixture of monomers comprising a nitrogen-containing monomer and an alkyl acrylic ester. A redox catalyst is used, and the monomers are introduced into the system at a rate which is within the range of proportions desired in the finished polymer, to avoid the formation of coagulum.

3,399,160
ORGANIC COATINGS CONTAINING SACRIFICIAL ANODES
Woodrow E. Kemp, Pittsburgh, Pa., assignor to Koppers Company, Inc., a corporation of Delaware
Continuation-in-part of application Ser. No. 557,770, June 15, 1966. This application Oct. 10, 1967, Ser. No. 676,995
2 Claims. (Cl. 260—31.2)

A corrosion-resistant coating system for ferrous metal surfaces comprising a sacrificial anode pigment and an organic binder having a low permeability by moisture and gases. The sacrificial anode pigment is most preferably zinc dust, but may also be magnesium or a binary alloy of the two metals. The organic binder is a polyhydroxyl polyalkaryl polyether. The coating system is packaged in one container in a solvent used as a vehicle to apply the coating. The absence of coreactive ingredients in the coating system now only allows the system to be unitarily packaged, but provides long shelf life as well.

3,399,161
PROCESS FOR PREPARING A SOLUTION OF ACRYLONITRILE POLYMERS
Yasushi Ichikawa, Yoshikazu Inai, Katsumi Shirode, and Toshio Ohfuka, Fuji-shi, Japan, assignors to Asahi Kasei Kogyo Kabushiki Kaisha, Osaka, Japan, a corporation of Japan
No Drawing. Filed May 27, 1965, Ser. No. 459,439
Claims priority, application Japan, May 29, 1964, 39/30,056; June 30, 1964, 39/36,486
9 Claims. (Cl. 260—32.4)

An acrylonitrile polymer solution is prepared by dissolving an acrylonitrile polymer, an acrylonitrile copolymer or a polymer mixture containing at least 80% by weight of acrylonitrile and 0.01–30% by weight of a stabilizing agent in a nitric acid solvent of 66–75% by weight of nitric acid. The stabilizing agent is carbamic acid, an ester or salt of carbamic acid or a urea derivative.

3,399,162
NON-FLAMMABLE SOLVENT SYSTEMS FOR EPOXY RESIN COATINGS
Morris Salame, Windsor, Conn., assignor to Monsanto Company, St. Louis, Mo., a corporation of Delaware
No Drawing. Continuation-in-part of application Ser. No. 383,257, July 16, 1964. This application Dec. 11, 1964, Ser. No. 417,785
3 Claims. (Cl. 260—33.2)

A solvent system for epoxy resins utilizing a chlorinated hydrocarbon mixture comprising trichloroethylene, a liquid chlorinated hydrocarbon having an atmospheric boiling point of up to 61° C., and another liquid chlorinated hydrocarbon having an atmospheric boiling point above 61° C.

3,399,163
DISPERSION COATING COMPOSITIONS
Richard Henry Cousens, Gerrards Cross, Desmond Wilfrid John Osmond, Windsor, and Edward Spencer George Simpson and Maurice Wainwright Skinner, Maidenhead, England, assignors to Imperial Chemical Industries Limited, London, England, a corporation of Great Britain
No Drawing. Continuation of application Ser. No. 192,983, May 7, 1962. This application Feb. 15, 1966, Ser. No. 527,483
Claims priority, application Great Britain, May 10, 1961, 17,003/61
10 Claims. (Cl. 260—33.6)

1. A coating composition adapted for spraying onto articles in which the vehicle consists essentially of a non-thixotropic, non-flocculated dispersion in an organic liquid of particles of a film-forming polymer which is insoluble in said organic liquid and a stabilizing agent having one constituent which is solvated by said organic liquid and another constituent which is compatible with said film-forming polymer, said organic liquid consisting essentially of a high-boiling organic liquid which suffers substantially no loss by evaporation on spray application under normal operating conditions such that when a mixture of said high-boiling organic liquid and a non-volatile liquid plasticizer is spray applied the liquid deposited will contain substantially the same proportion of high-boiling liquid to non-volatile plasticizer as the liquid mixture which is sprayed, in proportion, relative to the solid content of the composition, of at least 1:1.6 by volume, and low-boiling organic liquid which, when spray applied under normal operating conditions to an article to be coated, is evaporated by the application such that the sprayed article is found on examination immediately after spraying to be dry, in an amount sufficient to render the composition sprayable, said high-boiling organic liquid boiling above 150° C., the major part boiling above 180° C. and said low-boiling liquid boiling in the range 60–120° C.

3,399,164
POLYMER DISPERSIONS
Desmond Wilfrid John Osmond, Windsor, England, assignor to Imperial Chemical Industries Limited, Millbank, London, England, a corporation of Great Britain
No Drawing. Filed June 8, 1966, Ser. No. 555,973
Claims priority, application Great Britain, Aug. 4, 1965, 33,357/65
3 Claims. (Cl. 260—33.6)

Process of making dispersions of polymers in organic liquids by polymerizing monomer in the liquid in the presence of seed particles of another polymer having a specified degree of insolubility in the organic liquid as determined by its swelling factor in the liquid under the conditions of the polymerization. The process is particularly suitable for making fine particle dispersions of substantially uniform particle size.

3,399,165
RESIN BASE COATING COMPOSITIONS AND METHOD OF USING THE SAME
Morris M. Berger, Irving L. Blumenfeld, and Milton Alfred Torbin, Pittsburgh, Pa., assignors to Deco Coatings Corp., Pittsburgh, Pa., a corporation of Pennsylvania
No Drawing. Filed May 2, 1966, Ser. No. 546,530
6 Claims. (Cl. 260—41)

A coating composition, suitable for application to polyethylene without previous surface treatment thereof and capable of curing at room temperature, is prepared by mixing polystyrene (molecular weight about 300–3000, about 54.2 to 78.3 parts), a copolymer of ethylene and vinyl acetate (17 to 39% acetate, about 45.8 to 21.7 parts), a suitable pigment (e.g., about 5 parts), and if desired a suitable extender, such as calcium carbonate, to control the finish obtained. Suitable pigments include Wachtung Red B, benzidene yellow, and phthalocyanine blue. Other extenders are barytes, clay, talc, and silicas. In decorating polyethylene articles, the step of drying the article for fifteen minutes to one hour after each application of ink is thus avoided.

3,399,166
SILICA PIGMENT REINFORCED HYDROCARBON RUBBER COMPOUNDED STOCKS AND VULCANIZATES THEREOF AND PROCESSES FOR PRODUCING THE SAME
Oliver W. Burke, Jr., Fort Lauderdale, Fla. (P.O. Box 1266, Pompano Beach, Fla. 33061)
No Drawing. Filed Aug. 16, 1965, Ser. No. 480,151
8 Claims. (Cl. 260—41.5)

Herein it is shown that 100 pts. sulfur vulcanizable rubber can advantageously be reinforced with 5–80 parts of silica pigment which has been prepared by reacting an aqueous sodium silicate solution with carbon dioxide and treating the resulting silica pigment with sulfuric acid and/or aluminum sulfate to a pH below 5 and drying the same, without undue retardation of the cure, provided the compounding recipe is formulated to contain magnesium oxide 1 to 10 parts, together with 0.5 to 10 parts of zinc oxide and 0.3 to 5 parts alkanolic amine.

3,399,167
POLYURETHANES STABILIZED WITH DIALKYL SEMICARBAZIDES OR DIALKYL CARBAZINIC ACID ESTERS
Friedrich Karl Rosendahl, Heinrich Rinke, and Harald Oertel, Leverkusen, Germany, assignors to Farbenfabriken Bayer Aktiengesellschaft, Leverkusen, Germany, a German corporation
No Drawing. Filed May 14, 1964, Ser. No. 367,589
Claims priority, application Germany, May 17, 1963, F 39,769
7 Claims. (Cl. 260—45.8)

Polyurethane polymers are stabilized against discoloration and oxidation by having incorporated therein from about 0.5 to about 15 percent by weight of a 1,1-dialkyl semicarbazide or a 1,1-dialkyl carbazinic acid ester.

3,399,168
IMPROVING THE PROCESSIBILITY OF MACROMOLECULAR FORMALDEHYDE POLYMERS WITH AMINE-AMIDE STABILIZERS
Johannes J. M. Evers, Sittard, and Harmannus Bos, Geleen, Netherlands, assignors to Stamicarbon N.V., Heerlen, Netherlands
No Drawing. Filed June 28, 1963, Ser. No. 291,243
Claims priority, application Netherlands, July 3, 1962, 280,493
8 Claims. (Cl. 260—45.9)

1. A polymer composition of improved processability comprising a macromolecular formaldehyde polymer and at least one compound selected from the class consisting of:

(a) compounds containing at least one

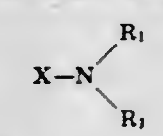

group and at least one

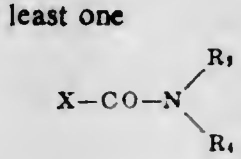

group; and

(b) compounds containing at least one

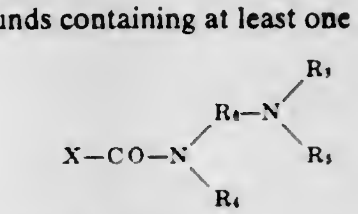

group wherein R_1 and R_2 are aryl; R_3, R_4 and R_5 are selected from the class consisting of hydrogen atoms, alkyl and cycloalkyl; and R_6 is arylene; and X is a hydrocarbon group.

3,399,169
2 - HYDROXY - 4 - ALKOXY - 4′ - ALKYLBENZOPHENONES AND POLYMERS STABILIZED THEREWITH
Robert Louis Horton, Bound Brook, N.J., assignor to American Cyanamid Company, Stamford, Conn., a corporation of Maine
No Drawing. Filed May 5, 1966, Ser. No. 547,736
3 Claims. (Cl. 260—45.95)

A polyolefinic composition having improved stability

to light comprising a polymer of an olefin of 2–4 carbons and 0.1 to 5.0% of a compound of the formula:

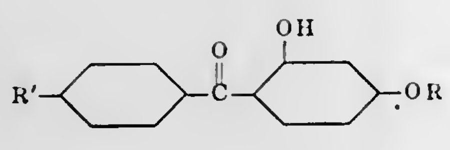

wherein R is an alkyl radical of 12–22 carbons and R′ is an alkyl radical of 4–10 carbons.

3,399,170
PROCESS FOR THE PREPARATION OF LINEAR THERMOPLASTIC POLYESTERS WITH FREEZING TEMPERATURES ABOVE 100° C.
Franz Blaschke, Witten (Ruhr), and Gerhard Schade, Witten-Bommern, Germany, assignors to Chemische Werke Witten G.m.b.H., Witten (Ruhr), Germany
No Drawing. Filed July 29, 1963, Ser. No. 298,452
Claims priority, application Germany, Nov. 12, 1962, C 28,389
7 Claims. (Cl. 260—47)

1. A process for the preparation of linear, thermoplastic polyesters having freezing temperatures above 100° C. which consists of heating a mixture consisting of equimolecular amounts of (A) an aryl ester selected from the group consisting of the phenyl, cresyl, xylenyl and naphthyl esters of terephthalic acid, isophthalic acid and mixtures thereof with (B) a mixture consisting of between approximately 90 and 70 mol percent of a diphenol and between approximately 10 and 30 mol percent of a glycol in the presence of a polycondensation catalyst and in the absence of a solvent for such a length of time and while discharging easily volatile reaction products until a product has been formed having a freezing temperature range of about 109–158° C. and a melting point range of about 128–250° C.

3,399,171
FLAME-RESISTANT EPOXY MOLDING AND COATING COMPOSITIONS
Wilhelm Vogt, Cologne-Sulz, Paul Janssen, Cologne, Friedrich Kniess, Allner, and Hermann Richtzenhain, Cologne, Germany, assignors to Dynamit Nobel Aktiengesellschaft, Troisdorf, Germany, a corporation of Germany
No Drawing. Filed Feb. 23, 1966, Ser. No. 529,243
Claims priority, application Germany, Feb. 26, 1965, D 46,617
20 Claims. (Cl. 260—47)

1. The process of producing a hardened flame-resistant resin which comprises reacting a polyepoxy compound having a plurality of 1,2-epoxide groups with a phosphoric acid halide having the formula:

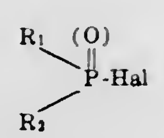

wherein Hal is halogen and each of R_1 and R_2 is a member selected from the group consisting of alkyl, aryl, aralkyl, alkaryl, chlor-alkyl, alkoxy, chloralkoxy, aryloxy, and cycloalkyl, and wherein R_1 and R_2 together represent the group R_3 wherein R_3 is selected from the group consisting of alkylene of from 4 to 5 carbon atoms, α-ω-dioxyalkylene of from 2 to 4 carbon atoms and 1,2-dioxyaryl to form a partial reaction product having at least one-tenth of the epoxy groups present therein reacted containing epoxy groups, and thereafter hardening said partial reaction product.

3,399,172
THERMOPLASTIC CONDENSATION POLYMERS TERMINATED WITH PARTICULAR IMIDE GROUPS
Donald B. G. Jaquiss, Lenox, Mass., assignor to General Electric Company, a corporation of New York
No Drawing. Filed Apr. 19, 1966, Ser. No. 543,518
7 Claims. (Cl. 260—47)

Thermoplastic polymers derived from dihydric phenols and consisting of either aromatic carbonate polymers or aromatic ester polymers having as imide terminal groups either

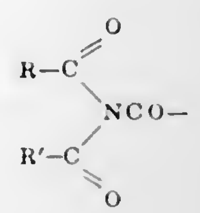

or

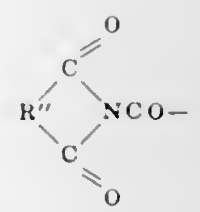

R and R′ may be either aryl, aralkyl or aliphatic radicals of 1–10 carbon atoms. R″ is a divalent organic radical of 2–12 carbon atoms. The process for preparing such polymers consists of reacting bisphenol-A, for example, with phosgene and 0.1–10 weight percent of tetrachlorophthalimide, for example.

3,399,173
LIGHT-STABLE POLYADDITION COMPOUNDS
Hansjörg Heller, Riehen, Jean Rody, Basel, and Ernst Keller, Binningen, Switzerland, assignors to J. R. Geigy S.A., Basel, Switzerland
No Drawing. Continuation of application Ser. No. 535,740, Mar. 4, 1966. This application Feb. 9, 1967, Ser. No. 614,816
Claims priority, application Switzerland, June 16, 1961, 7,101/61
17 Claims. (Cl. 260—47)

Organic addition polymers of ethylenically unsaturated polymerizable organic monomers are provided which consist essentially of divalent repetitive units of polymerizable 2-(2′-hydroxyphenyl)-benzotriazole compounds and units of ethylenically unsaturated organic monomer different from the said benzotriazole units. Such polyaddition compounds have improved stability to light and are useful as industrial products. The organic addition polymers are prepared by copolymerizing with the polymerizable 2-(2′-hydroxyphenyl)-benzotriazole compounds containing at least one copolymerizable ethylenically unsaturated group with conventional ethylenically unsaturated compounds.

3,399,174
SELF-EXTINGUISHING EPOXY RESINS
Bart J. Bremmer, Midland, Mich., assignor to The Dow Chemical Company, Midland, Mich., a corporation of Delaware
No Drawing. Continuation-in-part of application Ser. No. 285,582, June 5, 1963. This application Apr. 28, 1967, Ser. No. 634,484
11 Claims. (Cl. 260—47)

This application is concerned with fire retardant self-extinguishing epoxy resin having terminal 1,2-epoxy groups comprising the ether-ester reaction product of (1) nuclear halogenated meta-hydroxybenzoic acid having from one to three atoms of chlorine or bromine attached

to the aryl nucleus and (2) a compound selected from the group consisting of epichlorohydrin, diglycidyl ether, the diepoxide of a polyglycol, and the diepoxy ether of a polyhydricphenol, the reaction product being characterized by having one mole of the compound esterified with the carboxylic group of said acid and having one mole of said compound etherified through the hydroxyl group.

3,399,175
PROCESS FOR PREPARING POLYMERS OF ETHYLENIC BORON AND ETHYLENIC ALUMINUM COMPOUNDS
Gaetano F. D'Alelio, South Bend, Ind., assignor, by direct and mesne assignments, to Dal Mon Research Co., Cleveland, Ohio, a corporation of Delaware
No Drawing. Continuation-in-part of application Ser. No. 859,090, Dec. 14, 1968. This application May 11, 1965, Ser. No. 455,003
11 Claims. (Cl. 260—80)

1. A process for the preparation of a metal-containing polymer comprising the step of polymerizing an alkenyl metal-containing compound having a formula selected from the class consisting of

$$CH_2{=}CH{-}MR_2$$

and

$$CH_2{=}CH{-}Z{-}MR_2$$

wherein M represents a metal selected from the class consisting of boron and aluminum, R is a hydrocarbon radical selected from the class consisting of aliphatic, aromatic, cycloaliphatic, aliphatic-aromatic, aliphatic-cycloaliphatic, and aromatic-cycloaliphatic monovalent radicals, and divalent aliphatic radicals, said R group representing said divalent aliphatic radicals only when it is part of a cyclic ring structure and the second valency thereof is attached to another group in the compound so as to form a cyclic ring therewith, said other group being selected from the class consisting of the other R group and the Z group of said formula; Z is a structure selected from the class consisting of (1) a divalent radical selected from the class consisting of aliphatic, aliphatic-aromatic, and cycloaliphatic divalent hydrocarbon groups and derivatives thereof in which the sole derivative group is $—MR_2$ and (2) trivalent hydrocarbon radicals selected from the class consisting of aliphatic, aliphatic-aromatic, and cycloaliphatic trivalent hydrocarbon groups and the $—MR_2$ derivatives thereof, said third valency of said trivalent groups being attached to the second valency of a divalent R group thereby forming a cyclic ring therewith, said aliphatic-aromatic radicals of (1) and (2) having at least one aliphatic carbon atom between the aromatic nuclei thereof and the vinyl group of said formula and also between said aromatic nuclei and said $—MR_2$ group; said polymerization being conducted in an inert medium while said polymerizable mass is in intimate contact with at least 0.001 part, per part of polymerizable monomer used, of a catalyst comprising the reaction product of an aluminum trialkyl with a metal halide selected from the class consisting of titanium tetrachloride, titanium trichloride and zirconium trichloride.

3,399,176
CURING NITRILE RUBBERS WITH SULFUR AND METAL HALIDES
Herman V. Boenig, Lexington, Ky., and Richard A. Clark and Kenneth J. Gregory, Muskegon, Mich., assignors to Brunswick Corporation, a corporation of Delaware
Filed Dec. 2, 1965, Ser. No. 511,124
6 Claims. (Cl. 260—83.3)

Curing plasticized or non-plasticized nitrile rubber with metal halide to give improved properties in shorter cure time with regard especially to hardness, tensile strength, and resistance to swell in benzene. The cure can be effected by a synergistic effect of sulfur in combination with the metal halide and the rubber cures to Rockwell values within 15 minutes. The halide can be introduced into the

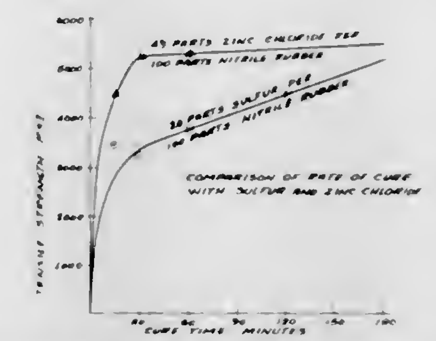

rubber conjointly with water as an aqueous paste or solution. A new cured rubber product is also described.

3,399,177
CRIMPABLE FIBRES OF ACRYLONITRILE/N-METHYLOL ACRYLAMIDE COPOLYMERS
Frank Reeder and James Dennis Griffiths, Coventry, England, assignors to Courtaulds Limited, London, England, a British company
No Drawing. Filed June 9, 1964, Ser. No. 373,876
Claims priority, application Great Britain, June 13, 1963, 23,572/63
4 Claims. (Cl. 260—85.5)

1. A chemically and physically homogeneous, inherently crimpable fiber of a copolymer consisting essentially of a major proportion of acrylonitrile and from 7 to 20 mol percent of an N-substituted derivative of acylamide or methacrylamide, said derivative being chosen from the group consisting of derivatives having N-methylol groups and derivatives capable of forming N-methylol groups on heating to above about 100° C., said copolymer being formed by free-radical copolymerization.

3,399,178
ANTISTATIC AGENTS
Christos Savides, Piscataway Township, Middlesex County, N.J., and John Edward Milks, Stamford, Conn., assignors of one-half to American Cyanamid Company, Stamford, Conn., a corporation of Maine and one-half to Arizona Chemical Company, New York, N.Y., a corporation of Delaware
No Drawing. Filed Sept. 1, 1965, Ser. No. 484,422
8 Claims. (Cl. 260—89.5)

1. A polymeric composition having improved antistatic properties comprising (a) as the polymeric substrate a polyolefin, a vinyl chloride polymer, a styrene polymer or a polyacrylate, and (b) from 0.1 to 5% based on the weight of (a) of a quaternary compound of the formula:

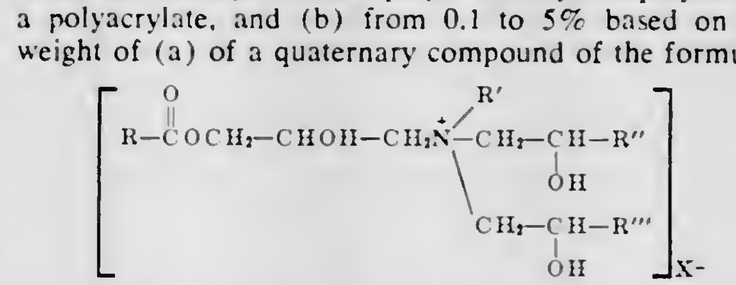

wherein R is an aliphatic or a cycloaliphatic radical of eight to nineteen carbon atoms; R′ is a lower alkyl radical of 1–3 carbons and R″ and R‴ are individually either hydrogen or alkyl of 1–4 carbons; and X is an anion.

3,399,179
DECARBOXYLATION OF ORGANIC CARBOXYLIC ACIDS AND ACID SALTS WITH FLUORINE TO FORM ORGANIC FLUORINE COMPOUNDS
Vytautas Grakauskas, Arcadia, Calif., assignor to Aerojet-General Corporation, Azusa, Calif., a corporation of Ohio
No Drawing. Filed Jan. 3, 1963, Ser. No. 249,116
38 Claims. (Cl. 260—92.1)

1. The method of replacing the carboxy group with the fluoro group in organic carboxylic acids which comprises

reacting fluorine with an organic compound containing at least one terminal group selected from the class consisting of carboxy groups and carboxylic acid salt groups, in the presence of a substantially inert normally liquid moderator.

37. The method of preparing polyvinyl fluoride which comprises reacting polyacrylic acid having a molecular weight of from about 5,000 to about 5 million with about a stoichiometric amount of fluorine in the presence of a substantially inert normally liquid moderator selected from the group consisting of water, the lower alkanols and the lower alkylene glycols.

3,399,180

POLYMERS OF HALOGENATED NITROSOALKANES

George H. Crawford, Jr., White Bear Lake, Minn., assignor to Minnesota Mining & Manufacturing Company, St. Paul, Minn., a corporation of Delaware

No Drawing. Filed May 18, 1959, Ser. No. 813,639

14 Claims. (Cl. 260—92.1)

1. A method for making a high molecular weight polymer of a nitrosoalkane which comprises copolymerizing a fluorine-containing nitrosoalkane having less than 13 carbon atoms per molecule and of at least 99% purity with an ethylenically unsaturated monoolefin at a substantially constant temperature between about −65° C. and about 50° C. to produce a completely perfluorocarbon solvent soluble high molecular weight wholly linear copolymer of at least 50,000 molecular weight.

3,399,181

COMPOUNDING AND CURING NEOPRENE RUBBER

Gary A. Bornemann and William F. McIlhenny, Lake Jackson, Tex., and Jay D. Gensler, Edgewood Arsenal, Md., assignors to The Dow Chemical Company, Midland, Mich., a corporation of Delaware

No Drawing. Filed Oct. 24, 1965, Ser. No. 504,995

5 Claims. (Cl. 260—92.3)

1. In the method of vulcanizing a polychloroprene type synthetic elastomer wherein MgO and ZnO are brought into contact with the unvulcanized elastomer and the resulting reaction mixture cured to form a vulcanizate, the improvement which comprises (a) providing a particulate composite consisting essentially of ZnO nuclei having a surface coating of MgO, the weight ratio of MgO:ZnO in said composite being suitable for curing a polychloroprene type synthetic elastomer, (b) admixing said composite with said unvulcanized elastomer, and (c) heat-curing the resulting mixture to produce a vulcanizate.

3,399,182

POLYMERIZATION CATALYST CONSISTING OF $TiCl_3$, R_3Al, AND TRIETHYLAMINE DIAMINE

Adalbert Farkas, Media, Pa., assignor to Air Products and Chemicals, Inc., Philadelphia, Pa., a corporation of Delaware

No Drawing. Filed July 29, 1963, Ser. No. 298,470

2 Claims. (Cl. 260—93.7)

1. In the method of polymerizing propylene in an inert solvent containing a stereo specific catalyst system featuring more than one mol of trialkyl aluminum per mol of titanium trichloride but less than about six mols of trialkylaluminum per mol of titanium trichloride, the improvement which consists of employing more than one but not more than about six mols of triethylenediamine per mol of titanium trichloride as an accelerator.

3,399,183

OLEFIN POLYMERIZATION PROCESS AND CATALYST THEREFOR

Donald B. Miller, Ponca City, Okla., assignor to Continental Oil Company, Ponca City, Okla., a corporation of Delaware

No Drawing. Filed Oct. 8, 1964, Ser. No. 402,609

21 Claims. (Cl. 260—93.7)

Polymerization catalyst is prepared by reacting a phosphorus-halogen compound with a first portion of an organoaluminum compound, adding a titanium halide thereto, aging the reaction product, and then adding a second portion of the organoaluminum compound thereto.

3,399,184

PROCESS FOR PRODUCING HIGH POLYMERS OF ALPHA - OLEFINS AND CATALYST COMPOSITIONS THEREFOR

Keiichi Azuma, Kazuo Shikata, and Kaiji Yokokawa, Tokuyama-shi, Japan, assignors to Tokuyama Soda Kabushiki Kaisha, Tokuyama - shi, Yamaguchi - ken, Japan, a corporation of Japan

Filed Apr. 9, 1965, Ser. No. 446,839

Claims priority, application Japan, Apr. 13, 1964, 39/20,583; May 21, 1964, 39/28,329

6 Claims. (Cl. 260—93.7)

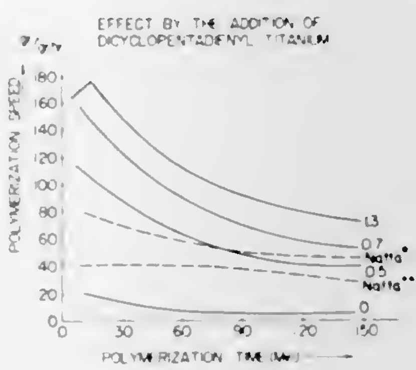

A novel catalyst for producing alpha-olefin high polymers which is obtained by reacting a low valent titanium halide, a polyalkylhydrosiloxane, dicyclo pentadienyl titanium, and if desirable a dialkyl zinc, and a process for producing said alpha-olefin high polymers using the above catalyst.

3,399,185

PREPARATION OF POLYETHYLENE HAVING IMPROVED OPTICAL PROPERTIES

Hans M. Schappert, Bethel Park, Pa., assignor to Koppers Company, Inc., a corporation of Delaware

Filed Mar. 1, 1965, Ser. No. 436,125

6 Claims. (Cl. 260—94.9)

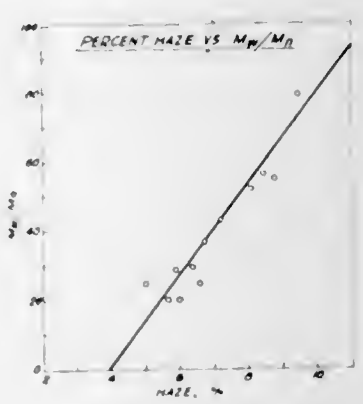

Ethylene is polymerized to polyethylene, having improved optical properties, in a high pressure, free radical type process whereby the telogen concentration throughout a tubular polyethylene reactor is maintained essentially constant.

3,399,186

CATIONIC METAL-CONTAINING AZO DYES FROM 8-HYDROXYQUINOLINE

Kenjiro Hosokawa, Osaka, Yasushi Kojima, Hirakata, and Motoo Mori and Masaaki Suzuki, Osaka, Japan, assignors to Kanegafuchi Spinning Co., Ltd., Tokyo, Japan

No Drawing. Original application Jan. 17, 1963, Ser. No. 252,026. Divided and this application Aug. 16, 1965, Ser. No. 480,100

Claims priority, application Japan, Jan. 24, 1962, 37/2,670; Oct. 23, 1962, 37/47,467

8 Claims. (Cl. 260—148)

Water-soluble metal-containing cationic dyestuffs are made by reacting dyes having either —COOH and —OH groups in ortho position with respect to one another in the molecule or dyes having —CHNOH and —OH groups, similarly located, with from 1 to 4 moles per mole of starting dye, of a metal compound that has tri- or tetravalent titanium, or tetravalent zirconium, or, most importantly, trivalent chromium, and possesses a basicity lower than 33.3 percent, the reaction medium being an organic solvent that is a solvent for both the starting dye and the metallized dye product and is at least partially miscible with water, the pH of the reaction being below 4. The starting dyes disclosed are unsulfonated and are mostly monoazo though some disazo and triaryl-methane dyes are shown. The metallized dyestuffs are suitable for dyeing a large variety of substances using conventional methods since they are stable against thermal decomposition.

3,399,187

COPPER-CONTAINING DISAZO DYESTUFFS

Rudolf Dürig, Basel, and Werner Bossard, Riehen, near Basel, Switzerland, assignors to J. R. Geigy A.G., Basel, Switzerland

No Drawing. Filed Aug. 23, 1965, Ser. No. 481,885

Claims priority, application Switzerland, Sept. 30, 1964, 12,722/64

6 Claims. (Cl. 260—148)

Copper-containing disazo dyestuffs of the formula

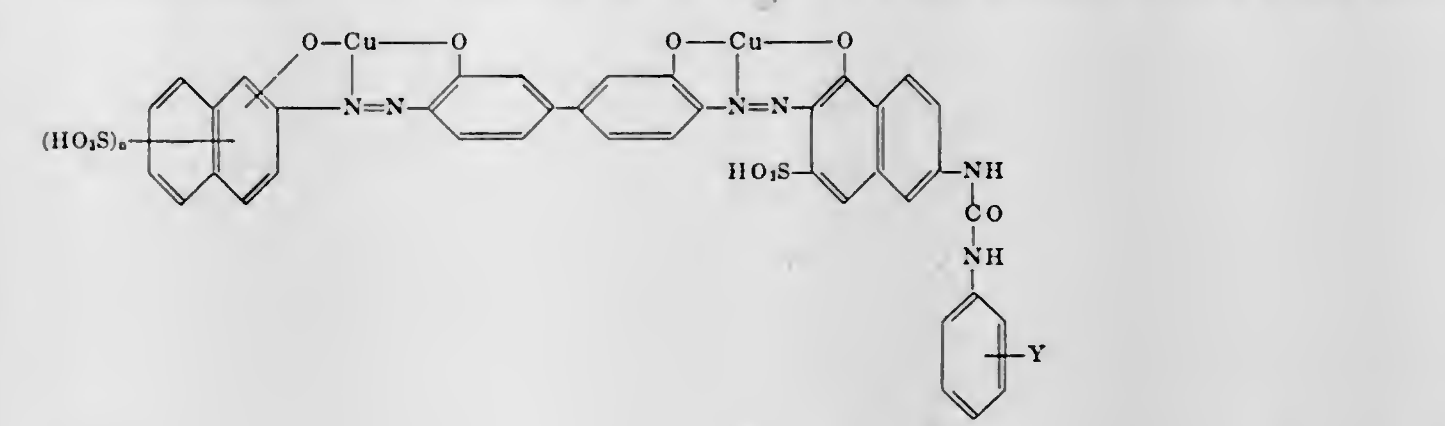

wherein

Y represents hydrogen, lower alkyl, lower alkoxy, lower alkanoylamino, benzoylamino, nitro, sulfo, chlorine or bromine, and

n represents a positive whole number from 1 to 3, and which dyestuff contains from 3 to 4 sulfonic acid groups.

The dyestuffs are useful for the dyeing of fibers containing cellulose.

3,399,188

YELLOW DISAZO DYES

Ray Allen Clarke, Pitman, and Dale Miller Griffin, Jr., Woodstown, N.J., assignors to E. I. du Pont de Nemours and Company, Wilmington, Del., a corporation of Delaware

No Drawing. Filed Nov. 23, 1964, Ser. No. 413,310

7 Claims. (Cl. 260—152)

Yellow disazo dyes of the structure

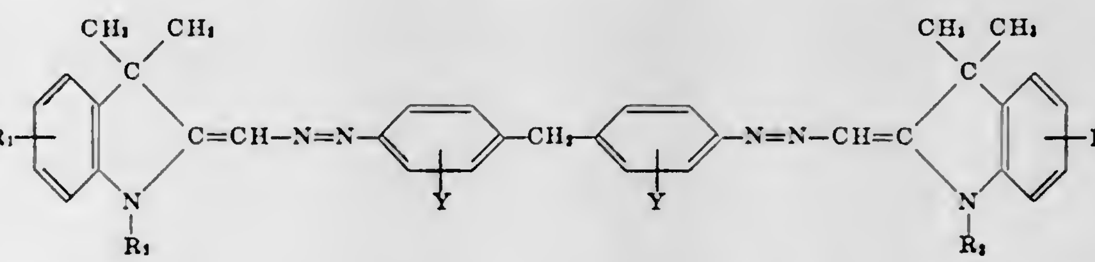

and the acid salts of these dyes are useful in black hectograph and spirit inks. Typical black dyes include a dye or dye salt of the above structure, Crystal Violet and Victoria Blue B, or a dye or dye salt of the above structure, Crystal Violet and Victoria Pure Blue BO.

3,399,189

TAMARIND EXTRACT

Arthur L. Gordon, Des Plaines, Ill., assignor to National Dairy Products Corporation, New York, N.Y., a corporation of Delaware

No Drawing. Filed Feb. 25, 1966, Ser. No. 529,939

12 Claims. (Cl. 260—209)

1. A process for recovering an improved polysaccharide from tamarind seed kernels which comprises, in combination, the steps of grinding tamarind seed kernels to provide tamarind kernel powder, treating the tamarind kernel powder with a polar organic compound selected from the class consisting of alcohols, aldehydes, ketones, polyols and ethers, said polar organic compound being present at a level sufficient to provide a fluid slurry, recovering the treated tamarind kernel powder from the polar organic compound, contacting the treated tamarind kernel powder with a substantial excess of water with respect to the weight of the tamarind kernel powder so as to extract the polysaccharides, separating the water, containing polysaccharides, from the remaining tamarind kernel powder, and recovering the polysaccharides from the water.

3,399,190

PHOSPHOROUS CONTAINING STARCH OXY-ALKYLATED POLYETHERS AND THEIR PREPARATION

Stephen Fuzesi, Hamden, and Milton Lapkin, New Haven, Conn., assignors to Olin Mathieson Chemical Corporation, a corporation of Virginia

No Drawing. Filed May 21, 1965, Ser. No. 457,814

10 Claims. (Cl. 260—233.3)

The process of preparing phosphorus-containing starch-based polyethers by admixing starch with concentrated phosphoric acid at an elevated temperature, whereby the starch is hydrolyzed to glucose, and oxyalkylating the resulting mixture. A polyhydric alcohol may also be admixed with the hydrolized starch prior to oxyalkylation. The resulting oxyalkylated polyethers are useful in the preparation of urethane foams having flame-retardant properties.

3,399,191

BENZINDOLE CYANOTRIMETHINE BASIC DYESTUFFS

Alfred Brack, Leverkusen, Germany, assignor to Farbenfabriken Bayer Aktiengesellschaft, Leverkusen, Germany, a corporation of Germany

No Drawing. Filed June 23, 1964, Ser. No. 377,369

Claims priority, application Germany, Aug. 30, 1963, F 40,638

8 Claims. (Cl. 260—240.6)

Basic dyestuffs of the formula

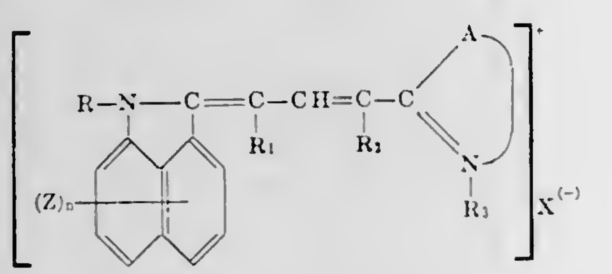

wherein R is lower alkyl, cycloalkyl, aralkyl, or aryl; Z is hydrogen or a nonionic substituent, n equals 1–2; R_1 is hydrogen or cyano; R_2 is hydrogen, phenyl, cyano, carbo lower alkoxy; A is the residual member of a ring which when included with

$$-\underset{\substack{|\\ R_3}}{C}=N-$$

is an unsaturated heterocyclic 5- or 6-membered ring with or without other additional fused rings; and X is an anion used for the salt formation of basic dyestuffs; the dyestuff being free of sulfonic acid and carboxylic acid groups. Several processes are disclosed for the manufacture of these compounds which are useful as dyestuffs in the dyeing or printing of synthetic or natural fibers such as the polymers of acrylonitrile and of asymmetrical dicyanoethylene, cellulose esters, silk, and cotton.

3,399,192

1-OXA-2-OXO 3,8-DIAZA SPIRO (4,5) DECANES

Gilbert Regnier, Sceaux, Roger Canevari, La-Haye-les-Roses, and Jean-Claude Le Douarec, Suresnes, France, assignors to Science Union et Cie, Societe Francaise de Recherche Medicale, Suresnes, Hauts-de-Seine, France

No Drawing. Filed Apr. 14, 1965, Ser. No. 447,952

Claims priority, application Great Britain, Apr. 22, 1964, 16,696/64

22 Claims. (Cl. 260—240)

1-oxa-2-oxo 3,8-diaza spiro (4,5) decanes and acid addition salts thereof. The compounds are useful as bronchodilators, analgesics, and anti-inflammatory agents.

3,399,193

N-TERTIARY AMINO-ALKYLENE 4- OR 5-NITRO-IMIDAZOLES AND THEIR PREPARATION

Pier Nicola Giraldi and Vittorio Mariotti, Milan, Italy, assignors to Carlo Erba S.p.A., Milan, Italy, a corporation of Italy

No Drawing. Filed Aug. 4, 1965, Ser. No. 477,318

7 Claims. (Cl. 260—247.5)

New imidazole-derivatives, and the process for making the same, are disclosed. These derivatives are made by reacting metal salts of 4- or 5-nitro-imidazole with β-halageno-ethyl-(morpholine, pyrrolidine, or dimethyl amine). The imidazole-derivatives exhibit antitrichomonas activity.

3,399,194

REACTIVE DYESTUFFS

Angelo Mangini, Germana Mazzanti, and Antonio Tundo, Bologna, Italy, assignors to Aziende Colori Nazionali Affini ACNA S.p.A., Milan, Italy

No Drawing. Filed Apr. 21, 1964, Ser. No. 361,553

Claims priority, application Italy, Apr. 26, 1963, 8,708/63; Aug. 8, 1963, 16,515/63

2 Claims. (Cl. 260—249)

Dyestuffs containing as the reactive group

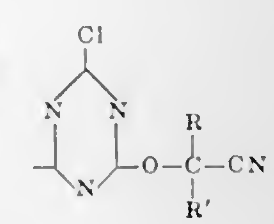

wherein R is an aliphatic group containing 1 to 5 carbon atoms, and R′ is aliphatic of 1–5 carbon atoms and H. Illustratory are dyestuffs of the formula

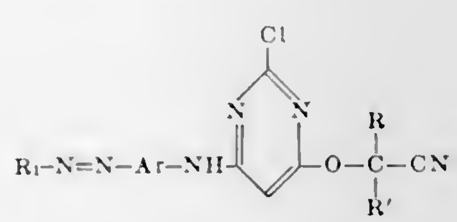

wherein R and R′ have the above meaning, Ar is substituted or unsubstituted benzene, naphthalene or diphenyl and R_1 is a radical of sulphonated pyrazolone derivatives, sulphonated naphthylamines, sulphonated naphthols, sulphonated amino-naphthols and anthraquinones. Process also disclosed.

3,399,195

THEOPHYLLINE DERIVATIVES

Adolf Stachel, Rolf-Eberhard Nitz, and Klaus Resag, Frankfurt am Main-Fechenheim, and Horst Kreiskott, Hochstadt, Kreis Hanau, Germany, assignors to Cassella Farbwerke Mainkur Aktiengesellschaft, Frankfurt am Main-Fechenheim, Germany, a company of Germany

No Drawing. Filed June 28, 1967, Ser. No. 649,472

Claims priority, application Germany, July 2, 1966, C 39,516

3 Claims. (Cl. 260—256)

Various types of vasodilators have previously been suggested but to date no generally effective compound has been found because of low or short effectiveness or undesirable side effects. Applicants have discovered a new class of compounds with particularly effective coronary dilator properties which are, in fact, superior to well-

known substances of this kind. In addition, they possess a central nervous system depressor activity which is desirable from the therapeutic point of view. These new compounds are piperazinyl-theophylline derivatives having the structural formula

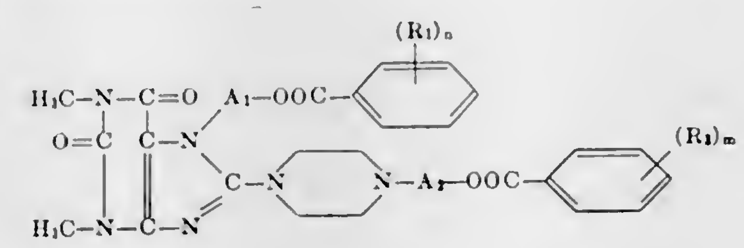

wherein A_1 is a straight or branched alkylene radical containing 2–4 carbon atoms, A_2 is a straight or branched alkylene or lower alkoxyalkylene radical containing 2–6 carbon atoms, R_1 and R_2 are alkoxy groups containing 1 or 2 carbon atoms and m and n are integers selected from 1, 2 or 3.

3,399,196

N-SUBSTITUTED PYRAZOLO-PYRIMIDINES

Jean Druey, Riehen, and Paul Schmidt, Therwil, Switzerland, assignors, by mesne assignments, to Ciba Corporation, New York, N.Y.

No Drawing. Continuation-in-part of application Ser. No. 815,826, May 26, 1959. This application July 3, 1963, Ser. No. 292,783

Claims priority, application Switzerland, Jan. 22, 1959, 68,600; Apr. 3, 1959, 71,541

16 Claims. (Cl. 260—256.4)

16\. A member selected from the group consisting of compounds of the formula

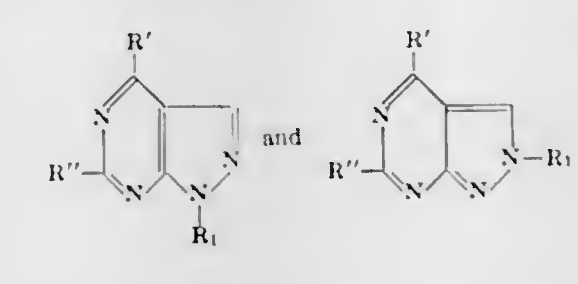

wherein R_1 stands for a member selected from the group consisting of lower branched alkyl and lower alkenyl and cyclo-lower alkyl of at least 3 carbon atoms, R′ stands for a member selected from the group consisting of lower alkyleneimino, lower mono-oxa-alkylene-imino, lower mono-aza-alkyleneimino, N′-lower alkyl-lower mono-aza-alkyleneimino wherein the hetero atoms are separated from the iminonitrogen atom by a chain of 2–3 carbon atoms, and substituted amino wherein the substituents are members selected from the group consisting of lower alkyl, lower alkoxy-lower alkyl, lower alkylamino-lower alkyl, lower dialkylamino-lower alkyl, monocyclic cyclo-lower alkyl and tetrahydrofurfuryl, and R″ is a member selected from the group consisting of hydrogen, lower alkyl and R′.

3,399,197

(1,3-DIAZACYCLOALKENE-2-YL)ALKYL-GUANIDINES

Edward M. Roberts, Cincinnati, Ohio, assignor to Richardson-Merrell Inc., New York, N.Y., a corporation of Delaware

No Drawing. Filed Apr. 5, 1966, Ser. No. 540,215

15 Claims. (Cl. 260—256.4)

The disclosure is of (1,3-diazacycloalkene-2-yl) alkylguanidines useful as anti-hypertensive agents. Alternate routes preparation are taught.

3,399,198

1-PYRIMIDINOYL- AND 1-IMIDAZOLOYL-3-HALOACETYL INDOLES

Tsung-Ying Shen, Westfield, and Lewis H. Sarett, Princeton, N.J., assignors to Merck & Co., Inc., Rahway, N.J., a corporation of New Jersey

No Drawing. Continuation-in-part of application Ser. No. 222,222, Sept. 7, 1962. This application Apr. 29, 1965, Ser. No. 452,015

1 Claim. (Cl. 260—256.5)

1\. A compound of the formula:

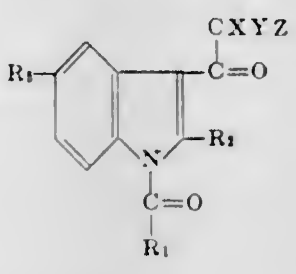

in which

R_1 is selected from the group consisting of imidazole, pyrimidine and substituted imidazole and pyrimidine in which the substituents are selected from the group consisting of halogen, lower alkyl, lower alkoxy, phenoxy, cyanomethyl, trifluoromethyl, benzoyl, lower alkylsulfonyl, nitro, amino, dilower alkylamino, phenyl, lower alkoxy, lower alkyl, benzyl, benzyloxy, lower alkylthio, benzylthio and lower alkanoylamino, lower alkanoyl, halo lower alkanoyl, halo lower alkoxy, halo lower alkylthio, benzylthio, cyano di(lower alkyl)sulfonamido, carb-lower alkoxy, di(lower alkyl)carboxamide, phenyl, lower alkylsulfinyl and lower alkylsulfonyl;

R_2 is selected from the group consisting of hydrogen, lower alkyl, lower alkenyl, phenyl, tolyl and benzyl;

R_5 is selected from the group consisting of hydrogen, lower alkyl, lower alkoxy, CF_3, CHF_2, nitro, cyano, aminomethyl, amino, hydroxy, benzylmercapto, lower alkylthio, diphenylamino, benzylamino, β-phenylethylamino, chloro lower alkylamino, chloro phenylamino, chloro benzylamino, lower alkoxy-lower alkylamino, anisidino, lower alkylanilino and lower alkoxyanilino, and

XYZ are selected from the group consisting of hydrogen and halogen, no more than two being hydrogen at any one time.

3,399,199

NITROALKYL-PIPERAZINES

Nathaniel Grier, Englewood, N.J., assignor, by mesne assignments, to Merck & Co., Inc., Rahway, N.J., a corporation of New Jersey

No Drawing. Filed May 21, 1965, Ser. No. 457,802

16 Claims. (Cl. 260—268)

1\. A compound of the formula

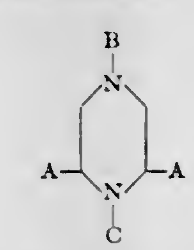

wherein A is hydrogen, loweralkyl or hydroxy loweralkyl; B is

$$[R_1-\overset{\overset{R_2}{|}}{\underset{|}{C}}-\underset{\underset{NO_2}{|}}{CH}-R_3]$$

wherein R_1, R_2, and R_3 are hydrogen, Q, loweralkyl, or substituted loweralkyl wherein the substituent is halo;

where:

Q is phenyl or substituted phenyl, wherein the substituents are loweralkyl, loweralkoxy, loweralkylenedioxy, carboloweralkoxy, phenyl phenoxy, phenyl loweralkyl, halo, p-nitro or tolyl; naphthyl or substituted naphthyl wherein the substituents are loweralkyl, loweralkoxy, halo or nitro;
cyclohexenyl;
heterocyclic radical selected from the group consisting of furyl, pyridyl and thienyl;
quinolinyl or substituted quinolinyl wherein the substituents are hydroxy or chloro;

C is B, phenyl, loweralkyl or hydrogen; and provided that where A is other than hydrogen, C is other than B.

3,399,200
METHOD OF PRODUCING STARCH PHOSPHATE PRODUCTS CONTINUOUSLY
Julian A. Hay, Gary, Ind., assignor to American Maize-Products Company, a corporation of Maine
Filed Mar. 15, 1965, Ser. No. 439,897
7 Claims. (Cl. 260—233.5)

Starch granules, free of excess unabsorbed water and containing an absorbed alkali metal phosphate salt, are passed through a phosphorylation zone which is disposed horizontally lengthwise and has a plurality of parallel spaced heated surfaces coextensive with its length. These surfaces are rotated through the granules as they traverse the zone to effect a rapid and uniform reaction between the starch and the phosphate salt.

3,399,201
AMINOALKYL-ETHANO-ANTHRACENES
Paul Schmidt, Therwil, Max Wilhelm, Allschwil, and Kurt Eichenberger, Therwil, Switzerland, assignors to Ciba Corporation, New York, N.Y., a corporation of Delaware
No Drawing. Continuation-in-part of application Ser. No. 404,904, Oct. 19, 1964, and is a continuation-in-part of application Ser. No. 512,201, Dec. 7, 1965. This application Apr. 12, 1966, Ser. No. 541,979
Claims priority, application Switzerland, Nov. 29, 1960, 13,359/60; Oct. 10, 1961, 11,710/61; Nov. 1, 1963, 13,434/63; Dec. 23, 1964, 16,637/64; Nov. 24, 1965, 16,177/65; Dec. 10, 1965, 17,086/65
25 Claims. (Cl. 260—268)

1. A member selected from the group consisting of (a) compounds of the formula

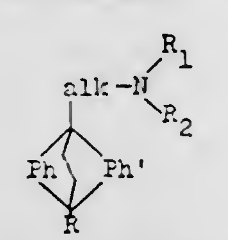

wherein alk represents a lower alkylene radical containing at most 4 carbon atoms, R stands for a member selected from the group consisting of hydrogen, halogen and lower alkyl, and R_1 and R_2 each represents a member selected from the group consisting of hydrogen, lower alkyl, lower hydroxyalkyl, lower monooxaalkyl, lower monoazaalkyl, lower monothiaalkyl, lower alkenyl, cyclo-lower alkyl, cyclo-lower alkyl-lower akyl, Ph''-lower alkyl, and, when taken together with the nitrogen atom a 5–7 membered alkylene imino ring; a saturated 5–7 membered 4-aza alkylene imino ring in which the aza nitrogen is unsubstituted or substituted by a member selected from the group consisting of lower-alkyl, hydroxy lower-alkyl; and morpholino, and wherein Ph and Ph' each represents a member selected from the group consisting of 1,2-phenylene, lower alkyl-1,2-phenylene, lower alkoxy-1,2 - phenylene, halogeno - 1,2-phenylene, trifluoromethyl-1,2-phenylene, nitro-1,2-phenylene and amino-1,2-phenylene, and Ph'' stands for a member selected from the group consisting of phenyl, lower alkoxy-phenyl, lower alkyl-phenyl, halogeno-phenyl, trifluoromethyl-phenyl, and amino-phenyl, and the lower alkyl and alkenyl portion in said substituents contain at most 7 carbon atoms and the cycloalkyl portions in said substituents contain from 4 to 7 ring carbon atoms, (b) their quaternary lower alkyl, lower alkenyl, Ph''-methyl and phenoxy-lower alkyl derivatives wherein the lower alkyl and alkenyl portions contain at most 7 carbon atoms and Ph'' stands for a member selected from the group consisting of phenyl, lower alkoxy-phenyl, lower alkyl-phenyl, halogenophenyl, trifluoromethyl-phenyl, and amino-phenyl, and the lower alkyl and alkenyl portion in said substituents contain at most 7 carbon atoms and the cycloalkyl portions in said substituents contain 4 to 7 ring carbon atoms, and (c) their acid addition salts.

3,399,202
6,7-DISUBSTITUTED QUINOLATES
Arthur A. Patchett, Cranford, and Edward F. Rogers, Middletown, N.J., and Robert L. Clark, West Chester, Pa., assignors to Merck & Co., Inc., Rahway, N.J., a corporation of New Jersey
No Drawing. Filed Dec. 22, 1965, Ser. No. 515,793
6 Claims. (Cl. 260—287)

6-haloalkoxy - 4 - hydroxyquinoline - 3 - carboxylates having alkoxy, loweralkyl or hydrogen at the 7-position, which substances have anticoccidial activity, are prepared by reacting 4-haloalkoxy aniline having alkoxy, loweralkyl or hydrogen at the 3-position with a diloweralkyl-loweralkoxy malonate, and heating the resulting product. Anticoccidial compositions are obtained by mixing said quinolates with an inert carrier.

3,399,203
6-LOWERALKOXY-7-LOWERALKYL QUINOLATES
Arthur A. Patchett, Cranford, Robert L. Clark, Woodbridge, and Edward F. Rogers, Middletown, N.J., assignors to Merck & Co., Inc., Rahway, N.J., a corporation of New Jersey
No Drawing. Filed July 1, 1966, Ser. No. 562,134
5 Claims. (Cl. 260—287)

Novel loweralkyl - 4-hydroxy-quinoline-3-carboxylates having a loweralkoxy radical at the 6-position and a loweralkyl radical at the 7-position, which substances have anticoccidial activity, are prepared by reacting together an appropriate 3,4-disubstituted aniline and a diloweralkyl-loweralkoxy methylene malonate to produce a loweralkyl - α - carboalkoxy-β-(3-loweralkyl-4-loweralkoxy-anilino)acrylate, and heating the latter substance at elevated temperatures. Anticoccidial compositions are prepared by dispersing these quinolates in a suitable carrier.

3,399,204
2-(HETEROCYCLIC AMINOALKYL)-CYCLIC KETONE-2 CARBOXYLIC ACID BENZYL ESTERS
Albert Frank, Kundl, Tyrol, Alfred Kraushaar, Kufstein, Tyrol, and Hans Margreiter, Radfeld, Tyrol, Austria, and Roland Schunk, Rossdorf, near Darmstadt, Germany, assignors to Biochemie Gesellschaft mit beschraenkter Haftung, Tyrol, Austria, a corporation of Austria
No Drawing. Filed Dec. 29, 1964, Ser. No. 422,028
Claims priority, application Austria, Jan. 13, 1964, A 232/64
5 Claims. (Cl. 260—294.3)

Certain basically substituted cycloalkanone-2-carboxylic acid esters are disclosed which have a pronounced pectoral and antitussive activity. Examples of such compounds are 2-(β-piperidinoethyl)-cyclodecanone-2-carboxylic acid benzyl ester hydrochloride and 1-oxo-2-(β-piperidinoethyl) - 1,2,3,4 - tetrahydronaphthalene - 2 - carboxylic acid benzyl ester. The products are prepared by reacting a cyclic ketone-2-carboxylic acid ester with an alkali metal oxide or related compound and a haloalkyl amine.

3,399,205
O - (CYANO - PYRIDYL)O,O' DI - LOWER - ALKYL PHOSPHATE AND PHOSPHORO THIOATE ESTERS AND DERIVATIVES THEREOF
Raymond H. Rigterink, Midland, Mich., assignor to The Dow Chemical Company, Midland, Mich., a corporation of Delaware
No Drawing. Continuation-in-part of application Ser. No. 375,369, June 15, 1964. This application Sept. 21, 1967, Ser. No. 669,395
9 Claims. (Cl. 260—294.8)

Cyanopyridyl phosphorus compounds having the formula.

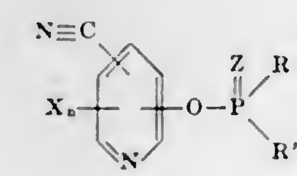

in which Z represents oxygen or sulfur; X represents bromo or chloro; R represents loweralkoxy; R' represents loweralkoxy, amino, or loweralkylamino; and n represents an integer of from 0 to 3, both inclusive, are claimed. The compounds are useful as parasiticides.

The present invention is directed to cyanopyridyl phosphorus compounds having the formula

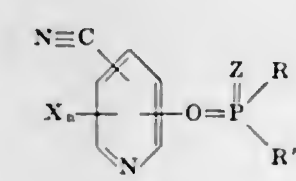

in which Z represents oxygen or sulfur; X represents bromo or chloro; R represents loweralkoxy; R' represents loweralkoxy, amino, or loweralkylamno; and n represents an integer of from 0 to 3, both inclusive. In the present specification and claims, the terms "loweralkoxy" and "loweralkyl" refer to radicals being of from 1 to 4, inclusive, carbon atoms; and the term "loweralkylamino" is inclusive of both mono- and diloweralkylamino radicals.

3,399,206
SUBSTITUTED TETRAHYDROPYRIDINE DERIVATIVES
Hans Herbert Kühnis, Hugo Ryf, and Rolf Denss, Basel, Switzerland, assignors to Geigy Chemical Corporation, Ardsley, N.Y., a corporation of New York
No Drawing. Filed Sept. 29, 1967, Ser. No. 671,563
Claims priority, application Switzerland, Jan. 15, 1965, 606/65
5 Claims. (Cl. 260—297)

The compounds are of the class of 1,2,3,6-tetrahydropyridine derivatives substituted in 4-position a hydroxyalkyl group useful as analgesic and antitussive agents. An illustrative embodiment as α-ethyl-1-methyl-1,2,3,6-tetrahydro-4-pyridine ethanol.

3,399,207
ESTERS OF 6-AMINOPENICILLANIC ACID
Peter Bamberg, Bertil Åke Ekström, and Berndt Olof Harald Sjöberg, Sodertalje, Sweden, assignors to Aktiebolaget Astra, Sodertalje, Sweden, a company of Sweden
No Drawing. Filed Oct. 6, 1966, Ser. No. 584,647
Claims priority, application Great Britain, Nov. 12, 1965, 48,208/65
10 Claims. (Cl. 260—306.7)

1. 6-aminopenicillanic acid esters of the formula:

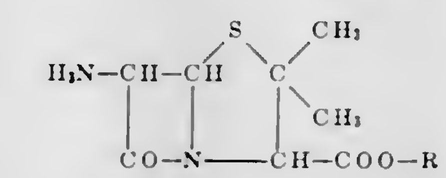

wherein R is a radical selected from the group consisting of unsubstituted and substituted phenacyl radicals, said substituted phenacyl radicals containing at least one member selected from the group consisting of halide, lower alkyl, lower alkoxy, and nitro radicals.

3,399,208
2-(2'-THIAZOLIN-2'-YL)-BENZIMIDAZOLES
George Holan, Brighton, Victoria, and Brian Colwell Ennis, Ripponlea, Victoria, Australia, assignors to Monsanto Chemicals (Australia) Limited, a company of Victoria, Australia
No Drawing. Filed Dec. 16, 1965, Ser. No. 514,388
Claims priority, application Australia, Dec. 18, 1964, 53,085/64
10 Claims. (Cl. 260—306.7)

1. Compound of the formula

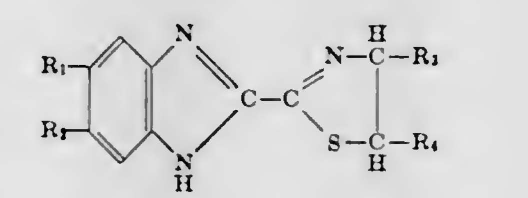

wherein R_1 and R_2 are selected from the group consisting of hydrogen, halogen, alkyl and alkoxy of not more than 6 carbon atoms, and R_3 and R_4 are selected from the group consisting of hydrogen and alkyl of not more than 6 carbon atoms.

3,399,209
2-(2'-OXAZOLIN-2'-YL)-BENZIMIDAZOLES
George Holan, Brighton, Victoria, and Eva Lea Samuel, Bentleigh, Victoria, Australia, assignors to Monsanto Chemicals (Australia) Limited, a company of Victoria, Australia
No Drawing. Filed Dec. 16, 1965, Ser. No. 514,383
Claims priority, application Australia, Dec. 18, 1964, 53,086/64
11 Claims. (Cl. 260—307)

1. Compounds of the formula

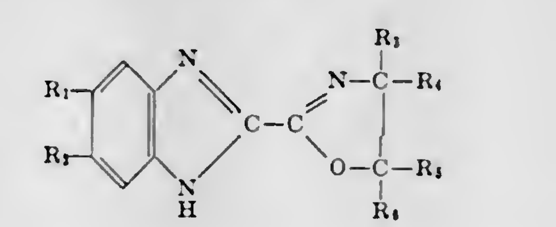

wherein R_1 and R_2 are selected from the group consisting of hydrogen, alkyl and alkoxy of not more than 6 carbon atoms, and R_3, R_4, R_5 and R_6 are selected from the group consisting of hydrogen and alkyl of not more than 6 carbon atoms.

3,399,210
PHOSPHONAMIDOTHIOATE COMPOUND
Paul B. Budde and Henry Tolkmith, Midland, Mich., assignors to The Dow Chemical Company, Midland, Mich., a corporation of Delaware
No Drawing. Original application Apr. 29, 1965, Ser. No. 452,004, now Patent No. 3,264,179, dated Aug. 2, 1966. Divided and this application Jan. 5, 1966, Ser. No. 518,772
7 Claims. (Cl. 260—309)

Novel compounds of the formula

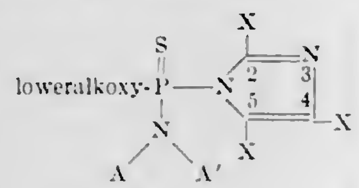

wherein each X independently represents hydrogen, loweralkyl or phenyl, the total number of carbon atoms in all X substituents being 15 or less, A represents lower alkyl or A′ and each A′ independently represents benzyl, furfuryl or tetrahydrofurfuryl. The compounds are used to control fungi such as organisms causing leaf spot, apple scab, powdery mildew, and late blight.

3,399,211
PRODUCTION OF 2-ARYL-4(5)-NITROIMIDAZOLES
Lewis H. Sarett, Princeton, Dale R. Hoff, Cranford, and David W. Henry, Plainfield, N.J., assignors to Merck & Co., Inc., Rahway, N.J., a corporation of New Jersey
No Drawing. Filed Mar. 10, 1964, Ser. No. 350,639
3 Claims. (Cl. 260—309)

The process of nitrating 2-aryl substituted imidazoles by reaction with nitric acid in the presence of a lower alkanoic acid or anhydride to produce the corresponding 2-aryl-4(5)-nitroimidazole. The nitroimidazole is useful as an intermediate in producing 1-substituted-2-aryl-4 or 5-nitroimidazoles having antiprotozoal activity.

3,399,212
BENZIMIDAZOLE UREAS
John R. E. Hoover, Glenside, and Robert John Stedman, Paoli, Pa., assignors to Smith Kline & French Laboratories, Philadelphia, Pa., a corporation of Pennsylvania
No Drawing. Filed Sept. 12, 1966, Ser. No. 578,512
Claims priority, application Australia, May 16, 1966, 5,600/66
15 Claims. (Cl. 260—309.2)

1-(2-benzimidazolyl)-3-alkyl, alkanyl, or cycloalkylureas are prepared by reaction of a 2-aminobenzimidazole with the appropriate isocyanate. 3,3-bisubstituted compounds are prepared by reaction of the appropriate secondary amine with a 2-benzimidazolyl thiolcarbamate ester. The compounds are anthelmintics.

3,399,213
IMIDE COMPOUNDS AND METHODS FOR THE PREPARATION OF IMIDE COMPOUNDS
David Wendell Osborne, Midland, Mich., assignor to The Dow Chemical Company, Midland, Mich., a corporation of Delaware
No Drawing. Filed Jan. 12, 1965, Ser. No. 425,065
36 Claims. (Cl. 260—326)

1. Method which comprises contacting a cyclic dicarboxylic anhydride of the formula

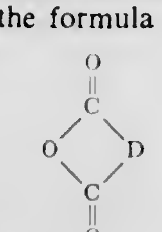

wherein the symbol D represents a member selected from the group consisting of ethylene; substituted ethylene bearing 1 or 2 substituent moieties, each of which is independently higheralkyl, higheralkenyl, phenyl, substituted phenyl, or benzyl; vinylene; substituted vinylene bearing 1 or 2 substituent moieties, each of which is independently higheralkyl, higheralkenyl, phenyl, substituted phenyl, benzyl, or halo; a two-adjacent-carbon-atom portion of an unsubstituted 6-membered carbocyclic ring; a two-adjacent-carbon-atom portion of a substituted 6-membered carbocyclic ring bearing from 1 to 4 substituents, each of which is independently nitro, halo, loweralkyl, loweralkoxy, loweralkylthio, diloweralkylamino, cyano, acetamido, or loweralkoxycarbonyl; a 2,3-two-carbon-atom portion of an unsubstituted 1,4-epoxy-6-membered carbocyclic ring; a 2,3-two-carbon-atom portion of a substituted 1,4-epoxy-6-membered carbocyclic ring bearing from 1 to 4 substituents, each of which is independently nitro, halo, loweralkyl, loweralkoxy, loweralkylthio, diloweralkylamino, cyano, acetamido, or loweralkoxycarbonyl; a 2,3-two-carbon-atom portion of an unsubstituted 1,4-methano-6-membered carbocyclic ring; a 2,3-two-carbon-atom portion of a substituted 1,4-methano-6-membered carbocyclic ring bearing from 1 to 4 substituents, each of which is independently nitro, halo, loweralkyl, loweralkoxy, loweralkylthio, diloweralkylamino, cyano, acetamido, or loweralkoxycarbonyl; and a 2,3-two-carbon-atom portion of naphthalene; with a phosphoramidate compound of the formula

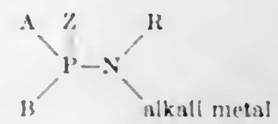

wherein each of A and B independently represents a member selected from the group consisting of alkyl, alkoxy, alkylthio, alkylamino, phenyl, substituted phenyl, phenoxy and substituted phenoxy; R represents a member selected from the group consisting of hydrogen and alkyl; and Z represents a member selected from the group consisting of oxygen and sulfur, further limited in that in the foregoing definitions, each of the terms "alkyl" and "alkoxy," employed either singly or as part of a compound expression, designates a radical being, as to its alkyl portion, of from 1 to 12, both inclusive, carbon atoms; each of the terms "higheralkyl" and "higheralkenyl" designates a radical being of from 1 to 18, both inclusive, carbon atoms; each of the terms "loweralkyl" and "loweralkoxy," employed either singly or as part of a compound expression, designates a radical being, as to its alkyl portion, of from 1 to 4, both inclusive, carbon atoms; the term "halo" designates bromo or chloro, only; the term "alkali metal" designates sodium, potassium, or lithium, only; and each of the terms "substituted phenyl" and "substituted phenoxy" designates a radical which bears on the phenyl ring from 1 to 3 substituent moieties; each of which is independently nitro, halo, loweralkyl, loweralkoxy, loweralkylthio, diloweralkylamino, cyano, acetamido, or loweralkoxycarbonyl.

3,399,214
OXIDES OF CARBOXAMIDO OXATHIINS
Marshall Kulka, Dalel Singh Thiara, and William A. Harrison, Guelph, Ontario, Canada, assignors to Uniroyal, Inc., a corporation of New Jersey
No Drawing. Filed Nov. 5, 1965, Ser. No. 506,596
10 Claims. (Cl. 260—327)

2,3-dihydro-5-carboxamido - 6 - methyl - 1,4, - oxathiin sulfoxides and sulfones of the formula:

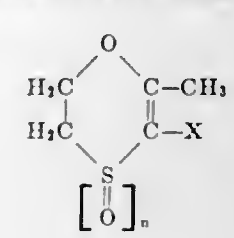

wherein X is a carboxamido group and n equals 1 or 2, are prepared by oxidation (e.g., with hydrogen peroxide in acid medium) of the corresponding oxathiin. The nitrogen atom of the carboxamido group may be variously substituted, for example with phenyl, as in 2,3-dihydro-5-carboxanilido-6-methyl-1,4-oxathiin sulfoxide or sulfone. The chemicals are useful as fungicides and bactericides.

3,399,215
PURIFICATION OF p-DIOXENES BY AZEOTROPIC DISTILLATION WITH WATER
Walter H. Brader, Jr., Houston, Tex., assignor to Jefferson Chemical Company, Inc., Houston, Tex., a corporation of Delaware
No Drawing. Original application Apr. 15, 1965, Ser. No. 448,275. Divided and this application Nov. 13, 1967, Ser. No. 682,534
5 Claims. (Cl. 260—340.6)

A crude p-dioxene is purified by diluting the crude p-dioxene with water, distilling the mixture to obtain and collect a p-dioxene-water azeotrope, separating the azeotrope into a water phase and a p-dioxene phase, drying the p-dioxene phase, adding a drying agent thereto and then fractionally distilling to obtain a pure p-dioxene product.

3,399,216
ETHYLENE KETALS OF HALOVINYLMERCAPTO-CYCLOHEXANONES
Harold M. Foster, Middlesex, Roger P. Napier, Edison, and Chin-Chiun Chu, North Plainfield, N.J., assignors to Mobil Oil Corporation, a corporation of New York
No Drawing. Filed Dec. 20, 1965, Ser. No. 515,199
3 Claims. (Cl. 260—340.9)

Ethylene ketals of 3-(halovinylmercapto)cyclohexanone and alkyl, alkenyl, alkoxy, alkylthio, dialkylamino, and cyano ring-substituted derivatives can be prepared by reacting the corresponding ethylene ketal of 3-mercaptocyclohexanone with a halogen substituted aldehyde, using an acid catalyst. These compounds can be converted to 4-hydroxybenzothiophenes, which are used to make 4-benzothienylcarbamates, an effective class of pesticides.

3,399,217
CATALYST SYSTEM FOR REACTION OF AN ALLYL ALCOHOL AND CARBON TETRACHLORIDE TO PRODUCE 2,4,4,4-TETRACHLOROBUTANOL
Joel A. Zaslowsky, Woodbridge, Conn., assignor to Olin Mathieson Chemical Corporation, a corporation of Virginia
No Drawing. Filed Mar. 4, 1964, Ser. No. 349,481
10 Claims. (Cl. 260—348.6)

An improvement in the process for preparing 2,4,4,4-tetrachlorobutanol by reacting carbon tetrachloride and allyl alcohol in the presence of a catalyst, the improvement which comprises employing as the catalyst a mixture comprised of between about 2 and about 25 percent by weight of powdered iron, between about 1 and about 20 percent by weight of anhydrous ferric chloride, about 5 and about 50 percent by weight of calcium carbonate; and about 5 and about 50 percent by weight of magnesium sulfate, the proportion of the mixture being between about 5 and about 35 percent by weight of the allyl alcohol reactant. 4,4,4-trichlorobutylene oxide is prepared from the chlorinated alcohol product by heating the alcohol in an agitated aqueous lime slurry.

3,399,218
OXIDATION CATALYSTS AND PROCESS FOR THEIR MANUFACTURE
Walter Wettstein, Chancy, near Geneva, Switzerland, assignor to Ciba Limited, Basel, Switzerland, a Swiss company
No Drawing. Continuation of application Ser. No. 492,346, Aug. 11, 1965. This application Mar. 24, 1967, Ser. No. 625,880
Claims priority, application Switzerland, Aug. 17, 1959, 77,043/59
2 Claims. (Cl. 260—385)

1. A process for the manufacture of anthraquinone by oxidation in the gaseous phase of anthracene in which process anthracene is contacted in the presence of air at a temperature between 400 to 460° C. with a catalytic mass obtained by drying, mixing with an inert vehicle, and heating at a temperature between 550 to 800° C. a precipitate prepared with exclusion of alkali metal ions of obtained at a pH-value of 6 to 7 from 1 mole of ammonium vanadate, 0.9 to 1.2 moles of an inorganic water-soluble manganous salt and, calculated per one mole of said manganous salt, 0.05–0.30 mole of an inorganic water-soluble ferric salt.

3,399,219
POLYACID PRODUCTION
John B. Braunwarth, Crystal Lake, Ill., assignor, by mesne assignments, to Union Oil Company of California, Los Angeles, Calif., a corporation of California
No Drawing. Filed Nov. 5, 1964, Ser. No. 409,320
17 Claims. (Cl. 260—410.9)

Cycloalkyl peroxides such as cyclohexanone peroxide is reacted with a beta-ketomonocarboxylic acid such as acetoacetic acid to form a ketodicarboxylic acid.

3,399,220
PROCESS FOR PREPARING DIORGANO-ANTIMONY MERCAPTIDES AND CARBOXYLATES
Nathaniel L. Remes, Livingston, and John J. Ventura, East Brunswick, N.J., assignors to M & T Chemicals Inc., New York, N.Y., a corporation of Delaware
No Drawing. Filed Apr. 24, 1964, Ser. No. 362,466
16 Claims. (Cl. 260—446)

In accordance with certain of its aspects, the process of this invention for preparing a compound of the formula R_2SbZR' wherein R and R′ are selected from the group consisting of alkyl, aryl, and alkenyl, and Z is selected from the group consisting of —S— and —OOC—, comprises mixing together $(R_2Sb)_2O$ and HZR′ at a reaction site in the presence of inert hydrocarbon solvent thereby forming R_2SbZR' and water; and continuously removing said water from said reaction site; said $(R_2Sb)_2O$ being present in the amount of at least one mole per two moles of HZR′.

3,399,221
PROCESS FOR PREPARING ALKYL ALUMINUM HALIDES
Giuseppe C. Bertoni and Giorgio Moretti, Ferrara, Italy, assignors to Montecatini Edison S.p.A., Milan, Italy
No Drawing. Filed Nov. 20, 1962, Ser. No. 239,073
Claims priority, application Italy, Nov. 22, 1961, 20,996/61
14 Claims. (Cl. 260—448)

1. A process for preparing dialkyl aluminum monohalides, which comprises reacting, under anhydrous conditions, a dialkyl aluminum monohydride with from about the stoichiometric amount to about 10% in excess of the stoichiometric amount of a halogen.

3,399,222
REDISTRIBUTION OF HYDROGEN AND HALOGEN ON SILANES
Donald R. Weyenberg, Midland, Mich., assignor to Dow Corning Corporation, Midland, Mich., a corporation of Michigan
No Drawing. Continuation-in-part of application Ser. No. 429,142, Jan. 29, 1965. This application Oct. 28, 1966, Ser. No. 590,228
9 Claims. (Cl. 260—448.2)

Quaternary ammonium halides and quaternary phosphonium halides are used as catalysts for the redistribution of silicon-bonded hydrogen and silicon-bonded chlorine or fluorine atoms in silanes. For example, methyldichlorosilane is heated with tetra-butylammonium chloride at 160° C. for 20 hours and rearranges to CH_3SiCl_3 and CH_3SiClH_2.

3,399,223
THERMAL REDISTRIBUTION OF ALKOXYMETHYLPOLYSILANES AND PRODUCTS THEREOF
William H. Atwell and Donald R. Weyenberg, Midland, Mich., assignors to Dow Corning Corporation, Midland, Mich., a corporation of Michigan
No Drawing. Filed Feb. 24, 1966, Ser. No. 529,648
8 Claims. (Cl. 260—448.8)

1. The process comprising heating under neutral conditions, at a temperature of 165° to 350° C., a polysilane of the formula

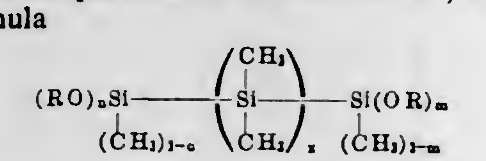

where:
R is a lower alkyl radical,
m has a value of 1 to 3,
n has a value of 0 to 3, and
x has a value of 0 to 1,

whereby a redistribution between Si—Si bonds and SiOR bonds in said polysilane occurs.

3,399,224
DINITRILES
John R. Nazy and Donald H. Wheeler, Minneapolis, Minn., assignors to General Mills, Inc., a corporation of Delaware
No Drawing. Filed June 24, 1966, Ser. No. 560,081
9 Claims. (Cl. 260—464)

Dinitriles of the formula,

$$R'—Z—R''—CN$$

where R′ is a monovalent straight chain saturated or ethylenically unsaturated aliphatic hydrocarbon radical containing 2 to 6 carbon atoms, R″ is a divalent straight chain saturated or ethylenically unsaturated aliphatic hydrocarbon radical containing 7 to 11 carbon atoms, the sum of the carbon atoms in R′ and R″ is 13, and F is a divalent radical of the structure

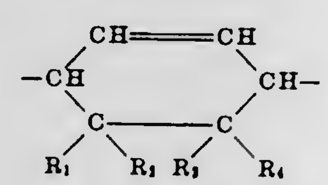

or

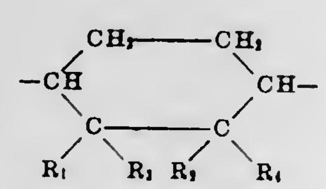

where R_1 and R_2 are H or CH_3 with the proviso that one of such radicals must be H and R_3 and R_4 are H or CN with the proviso that one of such radicals must be H and the other CN, are prepared by the ammination of an adduct of acrylonitrile and a lower alkyl ester of a conjugated fatty acid or by reacting acrylonitrile with a conjugated fatty acid nitrile. The dinitriles are useful in the preparation of diamines and dibasic acids used to prepare polyurea or polyamide polymers.

3,399,225
PROCESS FOR PRODUCING AROMATIC NITRILES
Kimio Tarama, Yoshio Kobayashi, and Kentaro Hattori, Kyoto, Japan, assignors to Nippon Carbide Kogyo Kabushiki Kaisha, Tokyo, Japan, a corporation of Japan
No Drawing. Filed July 15, 1964, Ser. No. 382,956
Claims priority, application Japan, July 30, 1963, 38/37,811
9 Claims. (Cl. 260—465)

A process for producing aromatic nitriles wherein a mixture of a halogen other than fluorine, an alkyl or alkenyl hydrocarbon and ammonia are reacted at a temperature of from 300–550° C. All or part of the halogen may be substituted by a halide which under the reaction conditions liberates the corresponding halogen in the presence of an oxygen-containing gas.

3,399,226
PREPARATION OF PHENYLALANINE COMPOUNDS
Walfred S. Saari, Lansdale, Pa., assignor to Merck & Co., Inc., Rahway, N.J., a corporation of New Jersey
No Drawing. Filed Oct. 22, 1965, Ser. No. 502,284
9 Claims. (Cl. 260—471)

Phenylalanines are prepared by contacting a hydroxylated N,N-dialkylbenzylamine with a lower alkyl ester of an α-nitroalkanoic acid, followed by reduction of the nitro group and hydrolysis of the ester to form the α-nitro-α-alkyl-β-(hydroxylated phenyl)propionic acid antihypertensive products.

3,399,227
RECOVERY OF PURIFIED DIMETHYL TEREPHTHALATE FROM MOTHER LIQUOR STRIPPER BOTTOMS
Meilute O. Tapulionis, Chicago, Ill., assignor to Standard Oil Company, Chicago, Ill., a corporation of Indiana
Filed July 31, 1963, Ser. No. 298,924
3 Claims. (Cl. 260—475)

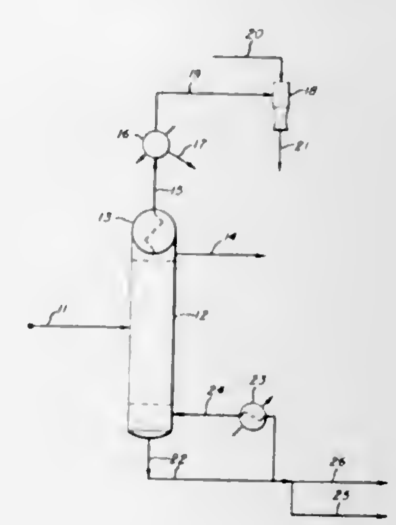

1. In a process for the preparation of dimethyl terephthalate by the esterification of terephthalic acid with methanol using an excess of methanol to obtain an esterification reaction mixture, crystallizing and separating crystalline dimethyl terephthalate from the esterification reaction mixture leaving a methanol mother liquor, and distilling the methanol mother liquor to remove therefrom substantially all of the methanol and all of the water as an overhead fraction leaving as a bottoms fraction mother liquor stripper bottoms; the improvement which comprises distilling at subatmospheric pressure said mother liquor stripper bottoms to obtain as an overhead fraction materials boiling below dimethyl terephthalate and to obtain a purified dimethyl terephthalate as bottoms fraction and recycling a major portion of this bottoms fraction to a crystallization zone where dimethyl terephthalate is crystallized from methanol solution.

3,399,228
3,4-DICHLOROBENZYL N-METHYLCARBAMATE HERBICIDE
Richard Herrett, Raleigh, N.C., and Robert V. Berthold, South Charleston, W. Va., assignors to Union Carbide Corporation, a corporation of New York
No Drawing. Continuation-in-part of application Ser. No. 269,874, Apr. 2, 1963. This application Sept. 15, 1965, Ser. No. 487,570
1 Claim. (Cl. 260—482)

3,4-dichlorobenzyl N-methylcarbamate is usable as a contact herbicide and as a selective pre-emergence herbicide to control both broad leaf and grassy weeds.

3,399,229
PROCESS FOR THE PRODUCTION OF HYDROXYALKYL ESTERS OF THE α,β-UNSATURATED CARBOXYLIC ACIDS
Wilhelm Kunze, Frankfurt am Main-Fechenheim, Hanswilli von Brachel, Offenbach am Main, and Hans Gattner, Frankfurt am Main-Fechenheim, Germany, assignors to Cassella Farbwerke Mainkur Aktiengesellschaft, Frankfurt am Main-Fechenheim, Germany, a company of Germany
No Drawing. Filed Mar. 9, 1966, Ser. No. 532,849
Claims priority, application Germany, Apr. 3, 1965, C 35,504
6 Claims. (Cl. 260—485)

Production of hydroxyalkyl esters of α,β-unsaturated carboxylic acids by catalytic addition of alkylene oxides to said acids in the presence of hexahydrates of chromium trihalides as the catalyst.

3,399,230
PREPARATION OF THIODISUCCINIC ACID VALUES
Robert W. Campbell, Orinda, Calif., assignor to Chevron Research Company, a corporation of Delaware
No Drawing. Filed June 1, 1965, Ser. No. 460,512
4 Claims. (Cl. 260—537)

Thiodisuccinic acid values are prepared by reacting a water solution of the mono-alkali metal salt of fumaric or maleic acid with hydrogen sulfide.

3,399,231
N-(1-ALKEN-1-YL) UREAS AND PROCESS FOR PREPARING
John P. Chupp, Kirkwood, Mo., assignor to Monsanto Company, St. Louis, Mo., a corporation of Delaware
No Drawing. Filed Feb. 1, 1966, Ser. No. 523,884
13 Claims. (Cl. 260—553)

N-(1-alken-1-yl) ureas of the formula

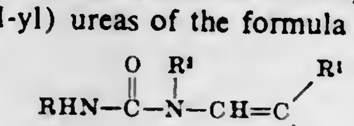

wherein R^1, R^2 and R^3 are alkyl and R is aryl or substituted aryl, and phytotoxic use thereof.

3,399,232
DINITROCARBOXAMIDES
Marvin H. Gold, Sacramento, and Henry J. Marcus, West Covina, Calif., assignors to Aerojet-General Corporation, Azusa, Calif., a corporation of Ohio
No Drawing. Original application Nov. 26, 1963, Ser. No. 326,286, now Patent No. 3,359,334. Divided and this application Nov. 4, 1966, Ser. No. 616,149
2 Claims. (Cl. 260—562)

This patent describes novel compounds having the general formula

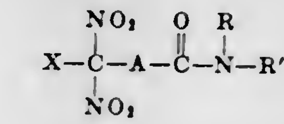

which are prepared in accordance with the following general reaction equation

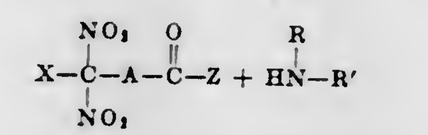

wherein A is an alkylene radical, preferably containing from 1 to about 20 carbon atoms; R and R′ are the same or different and are selected from the group consisting of hydrogen, hydrocarbyl, preferably alkyl or aryl having from 1 to about 12 carbons, or ω-hydroxyalkyl; X is chloro or bromo; and Z is chloro, bromo, or hydroxy, useful as high explosives.

3,399,233
PROCESS FOR THE PREPARATION OF 2-ARYL-1,1,3,3-TETRAALKYL GUANIDINES
Perry A. Argabright and Vernon J. Sinkey, Littleton, Colo., assignors to Marathon Oil Company, Findlay, Ohio, a corporation of Ohio
No Drawing. Filed Dec. 17, 1965, Ser. No. 514,670
11 Claims. (Cl. 260—565)

Processes for the production of 2-aryl-1,1,3,3-tetraalkyl guanidine wherein the alkyl groups are selected from the group consisting of methyl, ethyl, primary propyl, hydrocarbon radicals in the noninterfering, nonhydrocarbon substituted derivatives thereof, comprising in combination the steps of treating aryl isocyanate wherein the aryl radical is an aryl hydrocarbon radical, with from 1 to about 50 moles per mole of aryl isocyanate of tetraalkylurea wherein the alkyl groups are as described above at a temperature of from about 100° C. to about 300° C.

3,399,234
PROCESS FOR PREPARING N-FLUORO (POLYFLUOROALKYL) KETIMINES
Joseph La Mar Zollinger, Woodbury Township, Washington County, Minn., assignor to Minnesota Mining and Manufacturing Company, St. Paul, Minn., a corporation of Delaware
No Drawing. Filed Mar. 22, 1966, Ser. No. 536,276
2 Claims. (Cl. 260—566)

Process for the production of fluorimino group containing compounds, which consists in direct fluorination of a compound of the formula

$$R_f{}^1R_f{}^2C{=}NH$$

wherein $R_f{}^1$ and $R_f{}^2$ are the same or different polyfluoroalkyl radicals having from 1 to 12 carbon atoms, to form an intermediate monofluorimino group of the formula

$$R_f{}^1R_f{}^2CFNFH$$

followed by reacting the compounds with an alkali metal fluoride, to remove hydrogen fluoride therefrom and produce a compound having the formula

$$R_f{}^1R_f{}^2C{=}NF$$

3,399,235
POLYNITRO TRIFLUOROMETHYL AMINES
Milton B. Frankel, Menlo Park, Calif., assignor to Aerojet-General Corporation, Azusa, Calif., a corporation of Ohio
No Drawing. Original application June 8, 1964, Ser. No. 374,234, now Patent No. 3,228,929, dated Jan. 11, 1966. Divided and this application Sept. 8, 1965, Ser. No. 529,622
5 Claims. (Cl. 260—583)

Compounds of the formula

$$CF_3-A_1-\overset{NO_2}{\overset{|}{N}}-A'_1-\underset{\underset{NO_2}{|}}{\overset{NO_2}{\overset{|}{C}}}-R_1$$

wherein A_1 and A'_1 are lower alkylene radicals, and R_1 is selected from the group consisting of nitro and lower alkyl. These compounds are prepared by reacting novel compounds of the formula

$$CF_3-A_1-\overset{H}{\overset{|}{N}}-A'_1-\underset{\underset{NO_2}{|}}{\overset{NO_2}{\overset{|}{C}}}-R_1$$

with a strong nitrating agent, wherein in the above formulae, A_1 and A'_1 and R_1 are defined as above. The fluorine-containing starting material is prepared by reacting amine compounds of the formula

$$C_3-A_1-NH_2$$

with an alkanol of the formula

$$R_1-\underset{\underset{NO_2}{|}}{\overset{NO_2}{\overset{|}{C}}}-A'_1-OH$$

These compounds are inherently useful as explosives.

3,399,236
AMMONOLYSIS OF ALKYL HALIDES
King L. Mills, Jr., Bartlesville, Okla., assignor to Phillips Petroleum Company, a corporation of Delaware
No Drawing. Filed Aug. 9, 1965, Ser. No. 478,475
5 Claims. (Cl. 260—585)

In the formation of alkyl amines by the ammonolysis of alkyl halides in the presence of an alcohol, the ammonolysis process is initially carried out in the presence of at least one alkyl amine in an amount effective to prevent the formation of ammonium halide.

3,399,237
ULTRAVIOLET LIGHT STABILIZERS FOR PLASTIC MATERIALS
Hans Dressler, Pitcairn, and Kenneth G. Reabe, Delmont, Pa., assignors to Koppers Company, Inc., a corporation of Delaware
No Drawing. Filed June 17, 1964, Ser. No. 375,950
3 Claims. (Cl. 260—591)

Novel compositions of matter having the formula:

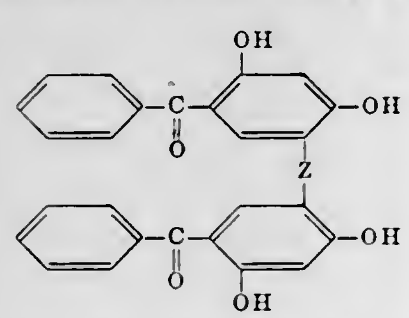

wherein Z is a member selected from the group consisting of sulfur, and

$$-\underset{\underset{R}{|}}{CH}-$$

and R is a member selected from the group consisting of hydrogen and alkyl having from 1–11 carbon atoms. The compositions are useful as UV light stabilizers in polymers.

3,399,238
PREPARATION OF ARYL THIOLS
Harold Greenfield, Watertown, Conn., assignor to Uniroyal, Inc., a corporation of New Jersey
No Drawing. Filed Sept. 20, 1965, Ser. No. 488,784
6 Claims. (Cl. 260—609)

Aryl thiols, and particularly benzenethiol and p-toluenethiol, are prepared by the hydrogenation of a corresponding salt of an aryl sulfinic acid in the presence of a platinum sulfide catalyst.

3,399,239
POLYSULFHYDRYL BENZENES
Walter Reifschneider, Midland, Mich., assignor to The Dow Chemical Company, Midland, Mich., a corporation of Delaware
No Drawing. Filed Feb. 25, 1966, Ser. No. 529,958
4 Claims. (Cl. 260—609)

1. Insecticidal polysulfhydryl benzene having from 4 to 6, both inclusive, sulfhydryl groups as sole substituents on the benzene nucleus.

3,399,240
NITROFLUORO ETHERS AND METHODS OF PREPARATION
Milton B. Frankel, Menlo Park, Calif., assignor to Aerojet-General Corporation, Azusa, Calif., a corporation of Ohio
No Drawing. Filed Nov. 26, 1963, Ser. No. 326,284
9 Claims. (Cl. 260—614)

1. Compounds of the formula

$$R_1-\underset{\underset{X_1}{|}}{\overset{NO_2}{\overset{|}{C}}}-CH_2-O-A_1-CF_2-CF_2H$$

wherein A_1 is lower alkylene, R_1 is lower alkyl, and X_1 is selected from the group consisting of nitro and hydrogen.

4. The process of preparing compounds of the formula

$$R_1-\underset{\underset{H}{|}}{\overset{NO_2}{\overset{|}{C}}}-CH_2-O-A_1-CF_2-CF_2H$$

which comprises reacting in an inert solvent a nitroolefin compound of the formula

$$R_1-\overset{NO_2}{\overset{|}{C}}=CH_2$$

with a fluoroalcohol of the formula

$$HCF_2-CF_2-A-OH$$

wherein in the above formulae, R_1 is lower alkyl and A_1 is lower alkylene.

3,399,241
PROCESS FOR PREPARING 2,4,4,4-TETRACHLOROBUTANOL FROM ALLYL ALCOHOL AND CCl_4 IN THE PRESENCE OF POWDERED IRON CATALYST
Eric Smith, New Haven, Conn., assignor to Olin Mathieson Chemical Corporation, a corporation of Virginia
No Drawing. Filed Feb. 26, 1964, Ser. No. 347,389
8 Claims. (Cl. 260—633)

Carbon tetrachloride and allyl alcohol are reacted in the presence of an improved catalyst system comprised of either powdered iron or a mixture of powdered iron and anhydrous ferric chloride to increase the yield of 2,4,4,4-tetrachlorobutanol. The resulting alcohol product may be reacted with an aqueous lime slurry to produce 4,4,4-trichlorobutylene oxide.

3,399,242
CHEMICAL PROCESS AND PRODUCTS PRODUCED THEREBY
Norman L. Wendler, Summit, and David Taub, Metuchen, N.J., assignors to Merck & Co., Inc., Rahway, N.J., a corporation of New Jersey
No Drawing. Original application July 12, 1962, Ser. No. 209,311, now Patent No. 3,270,067, dated Aug. 30, 1966. Divided and this application Apr. 28, 1966, Ser. No. 560,023
5 Claims. (Cl. 260—668)

The method of the present application includes the steps of condensing a 5-halo-5H-dibenzo[a,d]cycloheptene with an allyl magnesium halide to form the corresponding 5-allyl-5H-dibenzo[a,d]cycloheptene which is hydroborated, oxidized and hydrolyzed to form the corresponding 5-(γ-hydroxypropyl)-5H-dibenzo[a,d]cycloheptene, which is converted to a dibenzocycloheptene substituted at the 5-carbon atom with an aminopropyl radical in accordance with the procedure described in United States application Ser. No. 188,873, filed Apr. 19, 1962, now United States Patent 3,272,864.

3,399,243
CATALYTIC SYNTHESIS OF VINYLAROMATICS WITH COS
Donald E. Boswell, Yardley, Pa., assignor to Mobil Oil Corporation, a corporation of New York
No Drawing. Filed Dec. 20, 1966, Ser. No. 603,128
6 Claims. (Cl. 260—669)

Catalytic process for dehydrogenating alkylaromatic compounds (e.g., ethylbenzene) by reaction with carbonyl sulfide, at 300–700° C., in the presence of alumina or a Group II-A metal oxide to form the corresponding vinylaromatic compound (e.g., styrene), precursors for making polystyrene.

3,399,244
PROCESS FOR THE ISOMERIZATION OF α-PINENE
Michel Gut, Geneva, Dietmar Lamparsky, Dubendorf, and Peter Schudel, Grut, Gossau, Switzerland, assignors to Givaudan Corporation, Delawanna, N.J., a corporation of New Jersey
No Drawing. Filed June 29, 1966, Ser. No. 561,322
Claims priority, application Switzerland, July 27, 1965, 10,629/65
6 Claims. (Cl. 260—675.5)

The contra-thermodynamic isomerization of α-pinene to β-pinene is disclosed. The process involves reacting α-pinene at temperatures within the range from about 20° C. to 100° C., with an alkali metal organic compound in which the alkali metal is directly connected to a carbon atom, and treating the reaction product with protonating agents at temperatures within the range from about −60° C. and ambient room temperature, to yield an isomerizate containing at least 30% of β-pinene.

3,399,245
PROCESS AND APPARATUS FOR PARTIAL COMBUSTION OF HYDROCARBONS
Spencer L. Knapp, Texas City, Tex., assignor to Monsanto Company, St. Louis, Mo., a corporation of Delaware
Filed Jan. 28, 1966, Ser. No. 526,680
9 Claims. (Cl. 260—679)

A process and apparatus for the partial combustion of hydrocarbons to such products as acetylene wherein a mixture of hydrocarbon and oxygen is passed through a gas distributor having means located in the gas distributor tubes for imparting a swirling motion to the

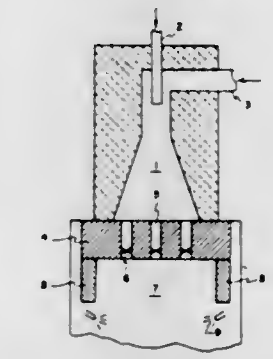

gases passing therethrough. Deposition of carbon on the face of the gas distributor is thus reduced.

3,399,246
OXYDEHYDROGENATION OF OLEFINS
Lee Traynor, Cleveland Heights, and Jamal S. Eden, Akron, Ohio, assignors to The B. F. Goodrich Company, New York, N.Y., a corporation of New York
No Drawing. Filed Aug. 30, 1967, Ser. No. 664,250
6 Claims. (Cl. 260—680)

Olefins such as methylbutenes and butenes are dehydrogenated with oxygen in the presence of a catalyst containing a mixture of cobalt pyrophosphate and silver pyrophosphate to form isoprene or butadiene-1,3.

3,399,247
PREPARATION OF CELLULAR POLYURETHANE
Erwin Windemuth, Leverkusen, and Günther Braun, Cologne-Flittard, Germany, assignors to Farbenfabriken Bayer Aktiengesellschaft, Leverkusen, Germany, a corporation of Germany
No Drawing. Continuation of application Ser. No. 454,198, May 7, 1965, which is a continuation of application Ser. No. 236,400, Nov. 8, 1962, which in turn is a continuation-in-part of application Ser. No. 784,084, Dec. 12, 1958. This application July 18, 1966, Ser. No. 566,085
Claims priority, application Germany, Dec. 31, 1957, F 24,726
13 Claims. (Cl. 260—824)

Polyethers containing terminal —NCO groups based on organic polyisocyanates, a polyalkylene ether polyol and an organo silicon compound, the organo silicon compound may be a silanol, a siloxane or the like which has free active hydrogen containing groups.

3,399,248
REACTION OF AMINO-ESTER MODIFIED VINYL POLYMER AND EPOXIDE RESINS TO FORM AN ADHESIVE COMPOSITION
Leon E. Wolinski, Buffalo, N.Y., assignor to E. I. du Pont de Nemours and Company, Wilmington, Del., a corporation of Delaware
No Drawing. Filed Dec. 1, 1964, Ser. No. 415,200
9 Claims. (Cl. 260—837)

Adhesive compositions may be prepared from amino ester modified vinyl polymers and epoxide resins by prereacting part of the amino ester modified vinyl polymer with all of the epoxide compound and blending the resulting polymer with the remainder of the vinyl polymer. This pre-reaction is effected by mixing these components for at least 6 hrs. at a temperature of at least 50° C.

In an example, 101 pts. of the diglycidyl ether of resorcinol and 8.4 pts. of an amino ester vinyl polymer (9% butyl acrylate, 45.7% butyl methacrylate, 35.3% methylmethacrylate and 10% methacrylic acid post-reacted with propylenimine were heated under reflux for 2.4 hrs. This product was then mixed with 665.6 pts. of the same amino ester modified vinyl polymer, pigments and solvents.

3,399,249

SULFOPROPYLATED OLEFIN BLOCK COPOLYMERS HAVING TERMINAL SEGMENTS CONTAINING AMINO GROUPS

Donald E. Hostetler, Monroeville, Pa., assignor, by mesne assignments, to Rexall Drug and Chemical Company, Los Angeles, Calif., a corporation of Delaware
No Drawing. Filed Jan. 12, 1966, Ser. No. 520,043
11 Claims. (Cl. 260—878)

1. A process for improving the dyeability of olefin block copolymer compositions containing in the polymer chains the grouping

P—A

wherein P is an alpha-olefin polymer and A represents a terminal block segment containing an amino group selected from the group consisting of polymerized 2-vinylpyridine, 4-vinylpyridine, 2-methyl-5-vinylpyridine, dimethylaminoethylvinyl ether, tetrahydrofurfurylamine, dimethylaminoethylacrylate, and dimethylaminoethylmethacrylate, said process comprising reacting said copolymer with 3-hydroxy-1-propane sulfonic acid sultone.

3,399,250

FILM COMPRISING POLYETHYLENE AND AN ETHYLENE-VINYL ACETATE COPOLYMER

Charles C. Kirk, Laurel, Razmic S. Gregorian, Silver Spring, and Frank X. Werber, Rockville, Md., assignors to W. R. Grace & Co., New York, N.Y., a corporation of Connecticut
No Drawing. Filed Mar. 12, 1963, Ser. No. 264,701
3 Claims. (Cl. 260—897)

This invention is directed to a composition for forming a printable, crosslinkable, oriented, heat-shrinkable film and the product resulting from incorporating into polyethylene an ethylene-vinyl acetate copolymer in a concentration of 10–50 percent along with 0.1 to 15 percent of a crosslinking agent.

3,399,251

ALKYLBENZYL ADDUCTS OF POLYETHYLENEIMINE BLENDED WITH CRYSTALLINE POLYOLEFINS

Robert Miller, Columbia, S.C., and Milton Farber, Verona, and Frederick C. Loveless, Oakland, N.J., assignors to Uniroyal, Inc., a corporation of New Jersey
No Drawing. Continuation-in-part of application Ser. No. 375,328, June 15, 1964. This application Feb. 1, 1966, Ser. No. 523,910
7 Claims. (Cl. 260—897)

The present invention relates to an alkylbenzyl polyethyleneimine and to a shaped article having a composition comprising an alpha monoolefin polymer blended with an alkylbenzyl adduct of polyethyleneimine which is rendered dyeable with acid type dyes by treating said article with an acidic reagent capable of diffusing into said composition and reacting with said alkylbenzyl adduct of polyethyleneimine.

3,399,252

METHOD AND APPARATUS FOR MANUFACTURE OF HIGH STRENGTH AND HIGH MODULUS CARBON FILAMENTS

Ralph L. Hough, Springfield, and Robert T. Schwartz, Dayton, Ohio, assignors to the United States of America as represented by the Secretary of the Air Force
Filed Apr. 15, 1966, Ser. No. 543,776
14 Claims. (Cl. 264—27)

1. A method for the continuous manufacture of flexible, yet high strength, high modulus carbon filaments comprising continuously moving a pre-formed pyrolyzed polymeric strand through a glow-discharge tube within which is positioned at least one electrically energized secondary electrode, electrically energizing said strand to act as a primary electrode whereby the atmosphere within said tube between said secondary electrode and said strand will transmit an electric current and heat said strand to its

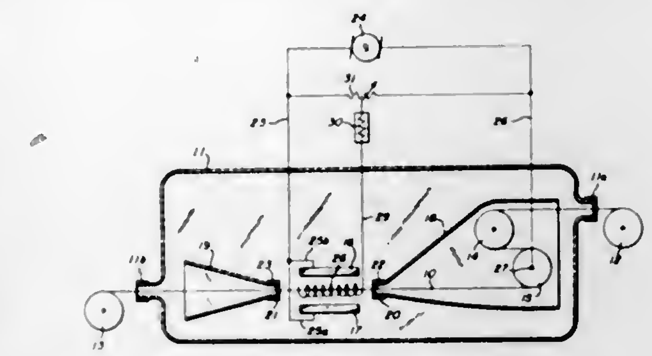

processing temperature and applying a tensile stress to at least the portion of said strand in proximity to said secondary electrode while the strand is so heated.

3,399,253

METHOD OF MAKING REFRACTORY SHAPES

Richard C. Eschenbach and Edgar F. Stresino, Indianapolis, Ind., assignors to Union Carbide Corporation, a corporation of New York
Filed Mar. 28, 1966, Ser. No. 537,889
1 Claim. (Cl. 264—30)

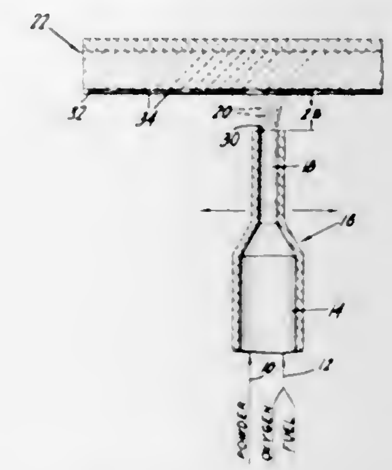

Method of making refractory shapes by a spray process which comprises heating a metal oxide powder in an internal combustion zone to plasticize the particles thereof, discharging the heated particles from said zone as a spray, moving the spray transversely of a selected base at a speed such that a substantially gas-free layer of such particles having a maximum thickness of about ½ inch is formed by the first pass on base, and similarly operating such spray to form fused overlapping layers of refractory particles, each layer having a thickness of about 1/16 inch, until a substantially solid refractory shape of desired thickness results.

3,399,254

PROCESS FOR SINTERING DIAMOND PARTICLES

Bruce W. Dunnington, West Chester, Pa., assignor to E. I. du Pont de Nemours and Company, Wilmington, Del., a corporation of Delaware
Continuation-in-part of application Ser. No. 368,539, May 19, 1964. This application Nov. 24, 1965, Ser. No. 516,201
8 Claims. (Cl. 264—84)

Polycrystalline sintered diamond consisting essentially of initially distinct diamond particles bonded directly to each other, and which has a particle density equal to at least about 80% of the crystal density of diamond and produces an X-ray diffraction pattern wherein the diffraction lines for diamond exhibit certain broadening. The sintered diamond is prepared by subjecting diamond powder to a shock wave at a pressure of at least about 300 kilobars.

3,399,255

METHOD FOR PRODUCING PROJECTABLE TARGETS

Vernon C. Moehlman, St. Louis, and Robert J. Klein, Florissant, Mo., assignors to Olin Mathieson Chemical Corporation, a corporation of Virginia
Continuation-in-part of application Ser. No. 338,031, Jan. 16, 1964. This application Aug. 1, 1966, Ser. No. 569,283
23 Claims. (Cl. 264—117)

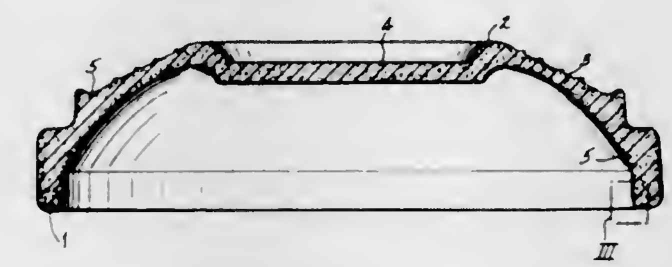

A method of making a projectable target of reduced pitch content by forming a molding powder of a plurality of granules, each granule comprising a filler material encapsulated with pitch, and compacting a predetermined amount of the molding powder under pressure to the size and shape of the target.

3,399,256

HOT PRESSING ZIRCONIA METHOD

Lawrence B. Robinson, Flushing, N.Y., and Fred W. Vahldiek, Dayton, and Charles T. Lynch, Fairborn, Ohio, assignors to the United States of America as represented by the Secretary of the Air Force
Continuation-in-part of application Ser. No. 409,031, Nov. 4, 1964. Division of application Ser. No. 311,923, Sept. 26, 1963, now Patent No. 3,218,673, dated Nov. 23, 1965. This application Jan. 20, 1967, Ser. No. 610,729
3 Claims. (Cl. 264—120)

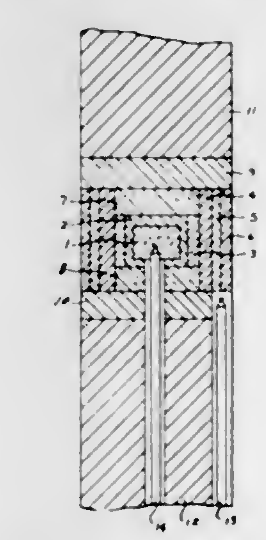

Process of forming ceramic bodies by prepressing powder for specimen, placing specimen in Pt tube, placing tube in cell, pressing cell between piston and closure, and subjecting specimen to up to 265,000 p.s.i. at 1800° C., quenching, cooling and removing specimen.

3,399,257

PRODUCTION OF TIRES

Yukio Ueno, Osaka, Japan, assignor to Kyowa Rubber Industry Co., Ltd., Osaka, Japan
Continuation of application Ser. No. 466,374, June 23, 1965. This application July 11, 1967, Ser. No. 652,629
Claims priority, application Japan, June 26, 1964, 39/36,571
1 Claim. (Cl. 264—134)

A method of producing a pattern in tires of different colors from the color of the body of the tire. A rubber layer of a given color is provided at the site of the pattern which is then coated with a differently colored rubbery material in a thin, two-millimeter layer. During molding and vulcanization a groove is provided in the mold of sufficient depth to permit flowing of the rubber material

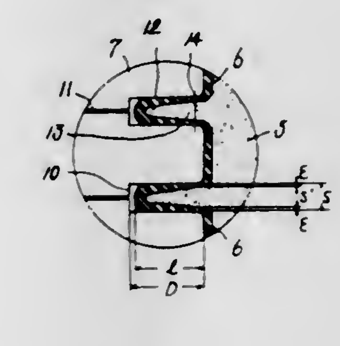

without a depression in the backing layer. The rubber flows smoothly into the vented groove or grooves to draw the overlying layer to a thin feather edge at the base of the projection. Upon cutting the projection at the base a substantially invisible line results in the pattern.

3,399,258

METHOD OF AUTOMATICALLY PRODUCING MOLDED TRAVELERS WITH WEAR RESISTANT INSERTS

Louis H. Morin, Bronx, N.Y., assignor to Coats & Clark Inc., New York, N.Y., a corporation of Delaware
Filed Sept. 29, 1965, Ser. No. 491,312
16 Claims. (Cl. 264—161)

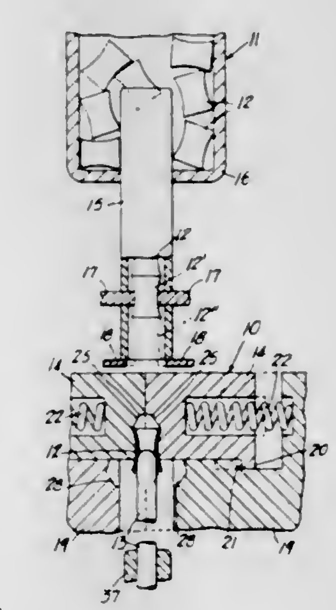

A method and apparatus for injection molding a traveler with a wear resistant insert by employing two pairs of dies, a transfer rod and a carrier rod. One pair of dies initially supports an insert delivered by the transfer rod, in the cavity portion of said dies. The transfer rod is removed and the second pair of dies is then closed around a part of the insert supported in the first pair of dies to complete the mold cavity. Plastic material is then injected into the completed cavity of both pairs of dies. During the molding the carrier rod is positioned between the first pair of dies and is used to move the molded product to a trimming and stripping station.

3,399,259
METHOD FOR PRODUCING BICOMPONENT POLYPROPYLENE FILAMENTS
John Raymond Brayford, Harrogate, England, assignor to Imperial Chemical Industries Limited, London, England, a corporation of Great Britain
No Drawing. Filed Apr. 7, 1966, Ser. No. 540,852
Claims priority, application Great Britain, Apr. 20, 1965, 16,543/65
8 Claims. (Cl. 264—168)

Self-crimping bicomponent polypropylene filaments are made by conjugate melt spinning two different polypropylene polymers in side-by-side or sheath-core relationship and subsequently relaxing the filaments. The polymers have the same intrinsic viscosity but different molecular-weight distributions. Enhanced crimp is effected by drawing the filaments.

3,399,260
PRODUCTION OF ACRYLONITRILE POLYMER FIBERS
Kazumi Nakagawa, Saidaiji, Nobuhiro Tsutsui, Okayama, and Junji Tsuge, Saidaiji, Japan, assignors to Japan Exlan Company Limited, Osaka, Japan
No Drawing. Filed May 27, 1964, Ser. No. 370,722
Claims priority, application Japan, June 5, 1963, 38/29,445
3 Claims. (Cl. 264—182)

A method of producing acrylonitrilic polymer fibers is provided, which comprises coagulating a spinning solution so as to form coagulated gel fibers, treating such fibers in a hot medium, stretching the fibers, and water-washing and drying them.

3,399,261
PROCESS FOR SPINNING AN AQUEOUS NITRIC ACID SOLUTION OF POLY(HEXAMETHYLENE) TEREPHTHALAMIDE
Chozo Nakayama, Teiichi Kaku, and Yasunori Kanai, Fuji-shi, Japan, assignors to Asahi Kasei Kogyo Kabushiki Kaisha, Osaka, Japan, a corporation of Japan
No Drawing. Filed July 21, 1966, Ser. No. 566,734
Claims priority, application Japan, Oct. 23, 1965, 40/64,700
2 Claims. (Cl. 264—184)

The present invention relates to a process for spinning an aqueous nitric acid solution of poly(hexamethylene) terephthalamide containing less than 0.05% of nitrous acid into an aqueous coagulation bath containing nitric acid.

3,399,262
EXTRUDED THERMOPLASTIC FLEXIBLE PIPE AND HOSE
John J. Quackenbush, Monroe, and Herbert O. Corbett, Bridgeport, Conn., assignors to National Distillers and Chemical Corporation, a corporation of Virginia
Filed Sept. 26, 1966, Ser. No. 581,835
5 Claims. (Cl. 264—209)

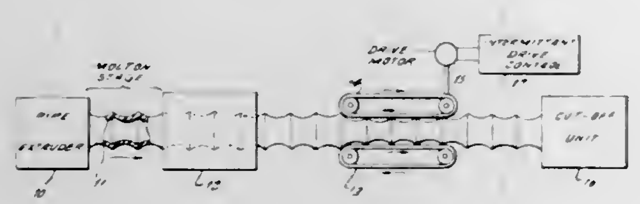

Apparatus for the continuous extrusion of corrugated pipe or hose from thermoplastic materials. By intermittently varying the speed at which the fluid plastic pipe or tube is drawn away from the extruder outlet, the diameter of the tube will neck down or decrease at each instance in the haul-off rate and the tube diameter will increase or return to approximately extruder outlet diameter at each decrease of the haul-off rate, thereby producing a corrugated tube through a continuous extrusion process, the number, spacing and extent of each corrugation (portion of reduced diameter) having direct relationship to each increase in the haul-off rate and the duration thereof.

3,399,263
STABLE ADJUVANT EMULSION COMPOSITIONS COMPRISING THE HYDRATED REACTION PRODUCTS OF A METALLIC CATION AND A FATTY ACID
Edward Strazdins, Stamford, and Richard Lansing Webb, Darien, Conn., assignors to American Cyanamid Company, Stamford, Conn., a corporation of Maine
No Drawing. Filed Apr. 12, 1965, Ser. No. 447,558
7 Claims. (Cl. 424—88)

The novel composition herein disclosed relates to an adjuvant composition comprising a disperse aqueous phase containing an antigenic substance and a continuous oil phase, said composition having admixed therein at least 0.5% by volume of the hydrated reaction products of a physiologically acceptable metallic cation and a physiologically acceptable fatty acid having 12 to 24 carbon atoms. Furthermore, a bimultiple emulsion adjuvant composition is disclosed, as well as a method of employing both compositions to potentiate the antigen-antibody effect in a host.

3,399,264
ANTISEPTIC COMPOSITION OF 9-AMINOACRIDINE HYDROCHLORIDE AND BENZALKONIUM HYDROCHLORIDE
Le Roy J. Hyman, Del-Jay Farm, Chagrin River Road, Gates Mills, Ohio 44040
No Drawing. Continuation-in-part of application Ser. No. 481,903, Aug. 23, 1965. This application Sept. 12, 1966, Ser. No. 578,499
1 Claim. (Cl. 424—257)

This invention is concerned with an antiseptically synergistic combination of 9-aminoacridine hydrochloride and benzalkonium chloride.

3,399,265
KILLING INSECTS BY APPLYING N-METHYL META - ALKYLAMIDOPHENYL CARBAMATES THERETO
Karoly Szabo, Syracuse, N.Y., assignor to Stauffer Chemical Company, New York, N.Y., a corporation of Delaware
No Drawing. Filed Dec. 27, 1965, Ser. No. 517,886
5 Claims. (Cl. 424—300)

1. The method of killing insects comprising applying thereto an effective amount of a compound having the formula

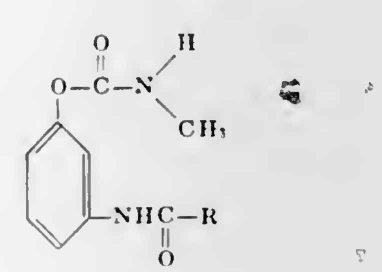

wherein R is lower alkyl.

ELECTRICAL

3,399,266
GRAPHITE HEATING ELEMENT ASSEMBLY AND FURNACES CONTAINING SAME
Edward C. Thomas, Lancaster, Calif., assignor to Great Lakes Carbon Corporation, New York, N.Y., a corporation of Delaware
Filed Apr. 28, 1966, Ser. No. 545,971
16 Claims. (Cl. 13—20)

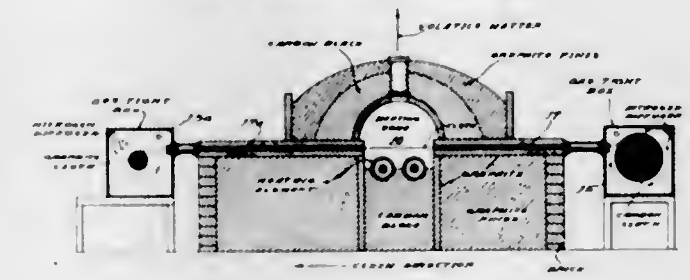

An electrical resistance heating element assembly comprised of two coaxially positioned headers and two cylindrical tubular heating elements is described. The headers and elements are preferably made from graphite. The assembly is particularly useful in the field of high temperature calcination or heat processing. The invention covers the assembly and also heating chambers employing one or more of the assemblies.

3,399,267
INDUCTION FURNACE
Albert L. Renkey and Peter T. Troell, Pittsburgh, Pa., assignors to Dresser Industries, Inc., Dallas, Tex., a corporation of Delaware
Filed Aug. 15, 1966, Ser. No. 572,563
6 Claims. (Cl. 13—30)

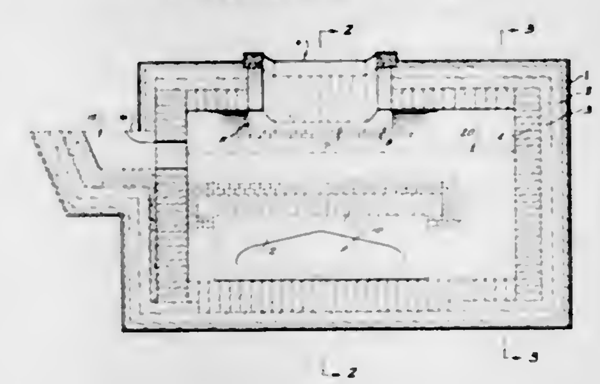

This invention pertains to refractory linings for large barrel-type channel induction furnaces, particularly composite refractory linings; the brickwork of which will remain in place when the throat lining wears away or is periodically replaced.

3,399,268
CHEMICAL METALLIZATION AND PRODUCTS PRODUCED THEREBY
Frederick W. Schneble, Jr., Oyster Bay, John F. McCormack, Roslyn Heights, Rudolph J. Zeblisky, Hauppague, John D. Williamson, Miller Place, and Joseph Polichette, South Farmingdale, N.Y., assignors, by mesne assignments, to Photocircuits Corporation, Glen Cove, N.Y., a corporation of New York
Continuation of application Ser. No. 404,302, Oct. 16, 1964, which is a division of application Ser. No. 218,656, Aug. 22, 1962, now Patent No. 3,259,559. This application June 7, 1966, Ser. No. 555,918
The portion of the term of the patent subsequent to June 25, 1980, has been disclaimed
18 Claims. (Cl. 174—68.5)

The invention is directed to novel articles of manufacture comprising an agent catalytic to the reception of electroless metal which catalytic agent is dispersed throughout an insulating material, said insulating material forming a coating for a suitable substrate and/or com-

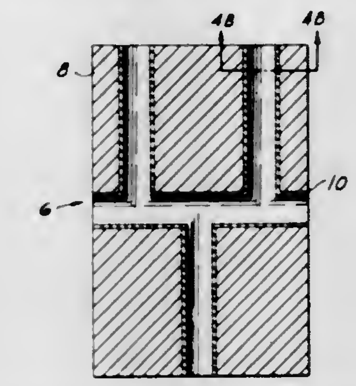

prising the substrate itself and having tenaciously adhered to said coating or substrate a conducting metal layer and/or a bright, ductile, electrolessly deposited metal.

3,399,269
HIGH TENSION WOOD STRUCTURE FREE OF RADIO INTERFERING RADIATION AND BURNING FROM LEAKAGE CURRENT
J Hebden Willox, 917 Newcastle Ave., Westchester, Ill. 60153
Filed Aug. 31, 1967, Ser. No. 664,682
6 Claims. (Cl. 174—45)

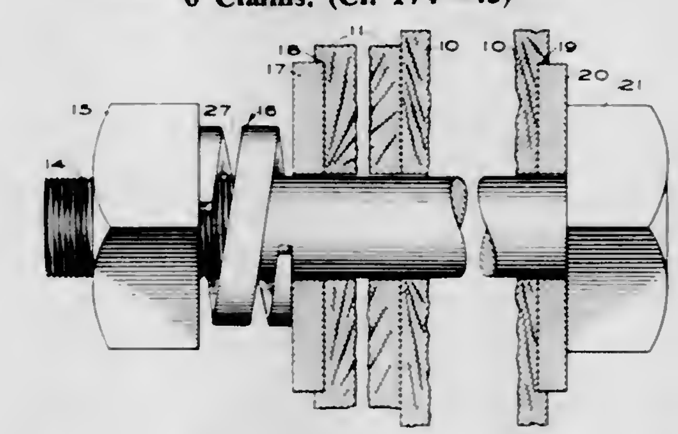

The adverse effects of (a) the burning of coniferous wood members of a high tension structure and (b) the generation of radio interfering sparking between closely spaced loose hardware is precluded by the interposition of a compressed helical spring coil between the nut and head of the assembly bolts passing through and joining the wood members, the spring coil having more than one full turn of quadrilateral cross section and flattened arcuate end surfaces coated with a malleable metal softer than the metal forming the coil.

3,399,270
TERMINAL FOR CABLE COMPRISING A PLURALITY OF SHEATHED CONDUCTORS
Henry R. Stoddard, Needham, Mass., assignor to Simplex Wire and Cable Company, Cambridge, Mass., a corporation of Massachusetts
Filed Mar. 14, 1966, Ser. No. 534,132
6 Claims. (Cl. 174—90)

A terminal is disclosed for a cable which includes a plurality of sheathed conductors having as a conductive metal an alkali metal, an alkaline earth metal or an alloy thereof. The terminal includes a cylindrical electrically conductive body member having a series of axially aligned sockets. Each socket is adapted to receive one of the individual sheathed conductors. Means are provided which establish mechanical connection between each socket and

the sheath of an internally located individual conductor, and each socket is then sealed to prevent passage of moisture or air between the socket and the conductor sheath.

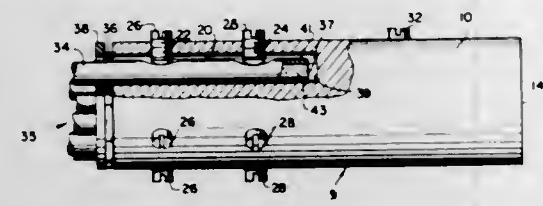

The terminal may be used as a dead end, as a means for connecting to a more conventional conductor or a pair of such terminals can be connected in back to back relationship and coupled together to act as a splice.

3,399,271
AUDIENCE MEASURING SYSTEM EMPLOYING CONSTANT CURRENT LOADS
Raymond Alec Butcher, Frimley, Surrey, and Roy Ernest White, Worcester Park, Surrey, England, assignors to R. & R. Research Limited
Filed Feb. 18, 1964, Ser. No. 345,789
Claims priority, application Great Britain, Feb. 19, 1963, 6,652/63
23 Claims. (Cl. 178—6)

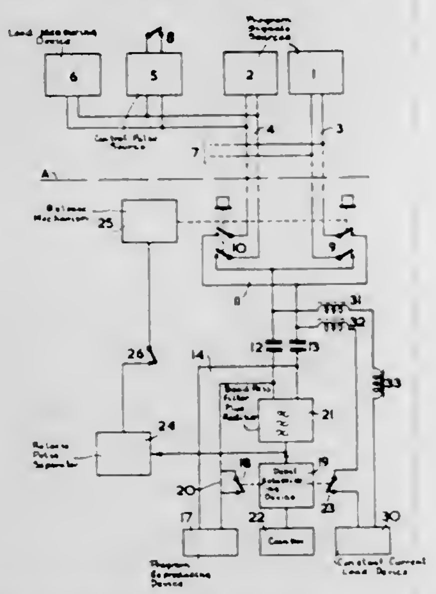

An audience measurement system comprises means for applying to a wire network connecting a transmitter to receiver stations firstly a testing voltage for determining network leakage and secondly a testing voltage having a wave form such that it causes a constant-current device to be shunted across the network at each receiver which is in operation, thus permitting audience measurements to be corrected for network leakage.

3,399,272
TELEVISION SIGNAL RECORDING AND REPRODUCING APPARATUS HAVING CARRIER FREQUENCY HIGHER THAN FIRST APERTURE NULL FREQUENCY
Gerhard Krause, Darmstadt, Germany, assignor to Fernseh G.m.b.H., Darmstadt, Germany
Filed July 7, 1965, Ser. No. 470,080
Claims priority, application Germany, July 11, 1964, F 43,411
13 Claims. (Cl. 178—6.6)

1. Television signal recording apparatus comprising, in combination: a source of video signals within a predetermined lower frequency range accompanied by a carrier wave modulated by an audio signal and occupying a predetermined higher frequency range; an elongate magnetic record member, a magnetic transducer head having an exciter winding and including an operating gap of predetermined width engaging said record member to record signals thereupon; transport means operable to traverse said record member past said gap with a predetermined velocity such that the first zero frequency of the frequency characteristic determined by the width of said gap and

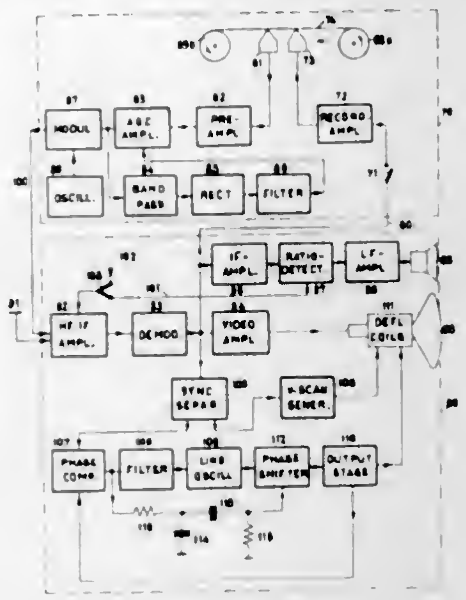

the velocity of said record member falls between said lower and upper frequency ranges, and means operable to apply said signals from said source to said exciter winding.

3,399,273
CIPHERING SYSTEM
Jean-Pierre Vasseur, Paris, France, assignor to CSF—Compagnie Generale de Telegraphie Sans Fil, a corporation of France
Filed Apr. 23, 1964, Ser. No. 361,985
Claims priority, application France, Apr. 23, 1963, 932,348
5 Claims. (Cl. 178—22)

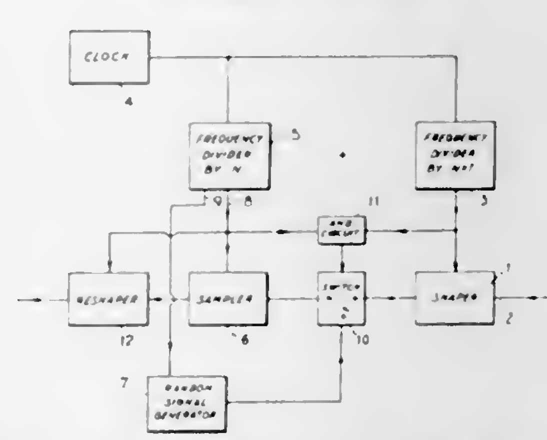

A system for transmitting and receiving secret pulse modulated signals, comprising means at the transmitter for inserting, between N intelligence pulses, digit signals having random levels, such digit signals being eliminated at the receiver.

3,399,274
PAGE PRINTER
Berthel F. Madsen, Arlington Heights, Ill., assignor to Teletype Corporation, Skokie, Ill., a corporation of Delaware
Filed Oct. 15, 1964, Ser. No. 404,013
12 Claims. (Cl. 178—33)

1. A device for printing any one of a plurality of characters in any one of a plurality of printing positions including:

a set of type elements each bearing a different character;
means for moving the set of type elements sequentially past at least a selected one of a plurality of printing positions;
means for detecting movement of the start of the set of type elements past the selected printing position;
a plurality of character storage elements each individual to one of the type elements in the set, each settable to a selected condition and each normally in a non-selected condition;
means for setting the character storage element corresponding to one of the type elements to its selected condition;
means for scanning the character storage elements and for producing an output upon scanning a character storage element in the selected condition;

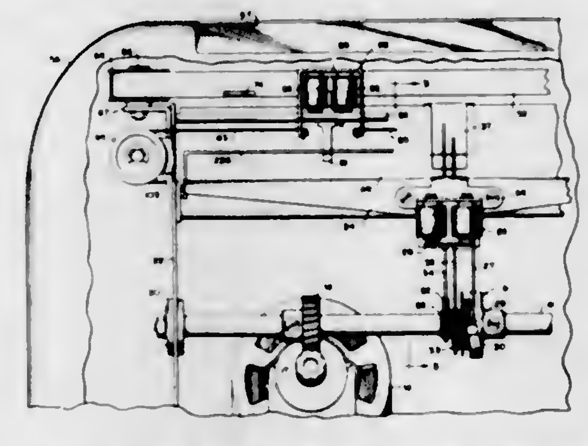

means responsive to the output of the detecting means for causing the scanning means to scan the character storage elements in synchronism with the movement of the set of type elements past the printing position, and
means responsive to the output of the scanning means for causing the character on the type element corresponding to the selected character storage element to be printed.

3,399,275
CONFERENCE CIRCUIT WITH SUPPRESSED SIDETONES
Frank Niertit, West Webster, and Ferenc Pankotay and Jack Shirman, Rochester, N.Y., assignors, by mesne assignments, to Stromberg-Carlson Corporation, Rochester, N.Y., a corporation of Delaware
Filed July 13, 1964, Ser. No. 382,188
9 Claims. (Cl. 179—1)

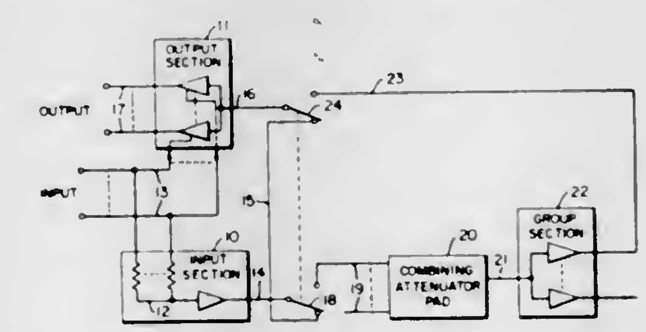

In a conference call circuit interconnecting multiple stations, each station having its individual input to the circuit and its individual output from the circuit, sidetone feedback is suppressed by inverting the composite of several of the inputs, combining that inverted composite with the composites of other similar groups of inputs, and combining the resulting larger composite at each individual station's output with the input from that station thereby cancelling from each station's output that portion of the output signal contributed by its input.

3,399,276
RC COUPLED TRANSISTOR AMPLIFIER
Robert A. Wolff, Lombard, Ill., assignor to Admiral Corporation, Chicago, Ill., a corporation of Delaware
Filed Apr. 28, 1965, Ser. No. 451,545
6 Claims. (Cl. 179—1)

A low cost, line operated, transformerless phono amplifier capable of substantial audio power output in which the load resistor for the output transistor also serves as a voltage dropping resistor between the power supply and the transistor. The speaker is capacitively coupled to

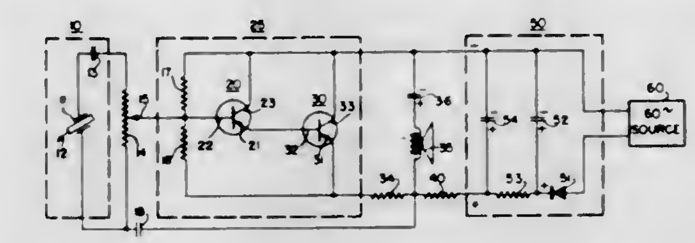

the output of the transistor thus eliminating the need for an output transformer.

3,399,277
SIGNAL TRANSLATING CIRCUIT
William Eugene Davis and George Peter Lee, Indianapolis, Ind., assignors to Radio Corporation of America, a corporation of Delaware
Filed May 14, 1965, Ser. No. 455,683
6 Claims. (Cl. 179—1)

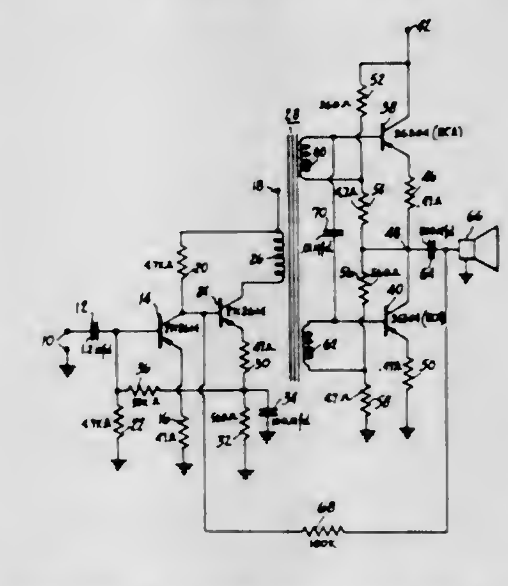

In a push-pull amplifier where feedback is employed to control the gain and frequency response, a capacitor connected between the bases of the output transistors provides a low impedance path whereby the high frequencies that produce excessive phase-shift are cancelled, thereby rendering the system more stable.

3,399,278
TIME DIVISION AND FREQUENCY DIVISION MULTIPLEXING SYSTEM
Per Olof Dahlman, Bethesda, Md., assignor to International Business Machines Corporation, New York, N.Y., a corporation of New York
Filed Oct. 15, 1962, Ser. No. 230,518
2 Claims. (Cl. 179—15)

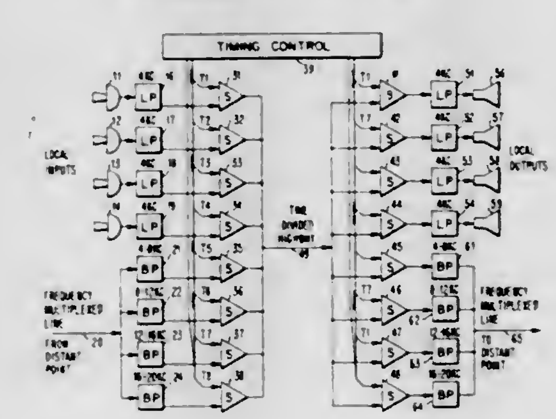

1. A multichannel communication system comprising in combination:

a time division multiplexed system including a plurality of input sampling gates operated sequentially

on a time divided basis, each one at a certain sampling rate, a plurality of output sampling gates each one opened in synchronism with at least one of said input gates, and circuit means for connecting the output of each of said input gates to all of said output gates;

a frequency multiplexed line capable of transmitting a plurality of signals occupying different frequency bands, each of said bands lying between a different pair of consecutive integral multiples of one-half of said sampling rate;

means for separating the signals in said line and applying each signal to a different one of a group of said input gates, said means including a plurality of filters each one having a band-pass coextensive with the frequency band of a different one of said signals;

a plurality of low frequency signal sources each of the signals from said sources having a maximum frequency less than one-half of said sampling rate;

circuit means for accepting said low frequency signals and applying each one of said low frequency signals to a different one of another group of said input gates; and

means for distributing each of the output signals from said output gates into separate frequency bands for transmission over a frequency multiplexed line, said last-mentioned means including a plurality of filters each having a bandwidth lying between a different pair of consecutive integral multiples of one-half of said sampling rate.

3,399,279
NUMBER TRANSLATOR
Eric Bierman, Ottawa, Ontario, Real Gagnier, Hull, Quebec, and Robert Kenedi, Ottawa, Ontario, Canada, assignors to Northern Electric Company Limited, Montreal, Quebec, Canada
Filed Mar. 17, 1965, Ser. No. 440,526
9 Claims. (Cl. 179—18)

1. A number translator to convert a directory number represented by a plurality of input leads, where each digit of a said number is represented by one electrically marked input lead out of a group of input leads, into a line location and a ringing code, comprising:

(a) translating means arranged to be responsive to each marked input lead to translate said number into a first single electrically marked lead appearing at a first terminal representing said number;
(b) gating means crossconnected to said terminal and arranged to operate in response to said marked lead to prepare the operate path of the group of line locations containing the required line location;
(c) the translating means being arranged to translate said number into a second single electrically marked lead appearing at a second terminal representing said number;
(d) first selecting means cross-connected to said second terminal and arranged to select the required line location from the group of line locations;
(e) and second selecting means, responsive to the translating means, to select the ringing code.

3,399,280
CIRCUIT IDENTIFYING MEANS FOR OBTAINING AN OUTLET SIGNAL IN DEPENDENCE ON A NUMBER OF INLET SIGNALS
Nils Herbert Edström, Vallingby, Sweden, assignor to Telefonaktiebolaget L. M. Ericsson, Stockholm, Sweden, a corporation of Sweden
Filed Oct. 27, 1965, Ser. No. 505,369
Claims priority, application Sweden, Nov. 19, 1964, 13,965/64
4 Claims. (Cl. 179—18)

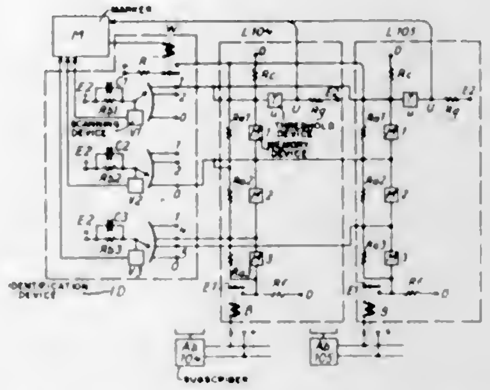

1. Circuit arrangement for obtaining a signal at an outlet in dependence on the reception of inlet signals in a predetermined sequential order at each one of a number of inlets, comprising a number of connection elements corresponding to said number of inlets, each said connection element comprising a bi-directional semi-conductor current controlling device including a solid state semi-conductor material and electrodes for coupling the same in a circuit, said solid state semi-conductor material in one state having at least portions thereof between the electrodes in one structural state which is of high resistance and substantially an insulator for blocking the flow of current therethrough in either or both directions, when an applied voltage is below an upper threshold voltage, and in another state having at least portions thereof between the electrodes in another structural state which is of low resistance and substantially a conductor for conducting the flow of current therethrough in either or both directions when the applied voltage is raised above said upper threshold voltage level and then remains above a lower threshold voltage level, said at least portions of said solid state semi-conductor material being controlled and substantially instantaneously changed from said one blocking structural state to said other conducting structural state by the imposition of a transient voltage of any polarity above said upper threshold voltage level and reverted to said blocking structural state when the current therethrough reduces substantially to zero, said connection elements, each one provided with a parallel resistance, being connected in series as links in a chain with a resistance as extreme link at one end of said chain, said chain being connected between the terminals of a first voltage source the voltage of which is lower than said upper threshold voltage, all intermediate junction points of said links constituting the inlets of said circuit arrangement, said inlets being arranged for receiving a second voltage that, added to the voltage of said first voltage source, exceeds the threshold voltage so that the connection elements may be transformed into low resistance state by the imposition of said second voltage at the inlets in turn and order counted from the other end of the chain, until the whole chain of connection elements has become low resistant, and a further connection element, equal to said connection elements, the one terminal of which constitutes the outlet of said circuit arrangement, said further connection element being connected between the last inlet and the source of said second voltage that, added to the voltage of said first voltage source appearing at said last inlet at the low resistance state of all connection elements of the chain, exceeds the threshold voltage of said further connection element to bring the same to conducting state thereby changing the voltage condition of said outlet.

3,399,281
ELECTRIFICATION SYSTEM INCLUDING A COMPOSITE CONDUCTOR
James A. Corl, San Carlos, Calif., assignor, by mesne assignments, to The Rucker Manufacturing Company, Oakland, Calif., a corporation of California
Filed Feb. 4, 1966, Ser. No. 525,182
8 Claims. (Cl. 191—23)

A composite electrical conductor for sliding contact by a current collector includes an aluminum bar of relatively large cross-sectional area and a thin stainless steel cap of W-shaped cross-sectional configuration forming a contact surface. The steel cap is mechanically and electrically connected to the aluminum bar by gas metal-arc spot welds extending through pre-punched apertures in the legs of the cap and fused to the sides of the aluminum bar. The cap is formed in a plurality of shorter lengths connected in slightly spaced end-to-end relationship on a longer bar. An expansion joint between adjacent bars includes a stainless steel tongue extending from the cap of one bar into a mating groove in the cap of the adjacent bar. The expansion joint is arranged to provide a continuous self-centering contact surface for a collector moving across it.

3,399,282
MULTIPLE PUSHBUTTON SWITCH
Jinsaku Nagashima and Masao Nakamatsu, Tokyo, Japan, assignors to Matsuku Kabushiki Kaisha, Tokyo, Japan, a corporation of Japan
Filed Nov. 15, 1966, Ser. No. 594,503
Claims priority, application Japan, Nov. 15, 1965, 40/92,682; Apr. 5, 1966, 41/30,930; Aug. 17, 1966, 41/78,222
2 Claims. (Cl. 200—5)

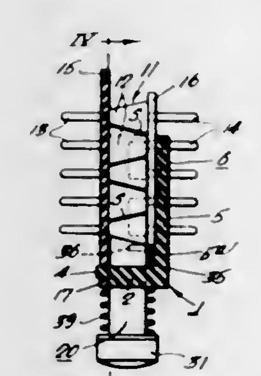

A multiple pushbutton switch comprising a frame of one-piece construction providing a series of slots, stationary contact assemblies mounted in the slots, and slide members having contacts adapted to engage the stationary contact assemblies. The contact assemblies include contact plates juxtapositioned to provide oblique slits therebetween, and the slide contacts comprise W-shaped members with their bottom corner parts adapted to bridge the slits.

3,399,283
MANUALLY CONTROLLED ELECTRIC TIME SWITCH
David E. Thomas, Enfield, Middlesex, England, assignor to Sangamo Electric Company, Springfield, Ill., a corporation of Delaware
Filed Oct. 27, 1965, Ser. No. 513,614
Claims priority, application Great Britain, Oct. 29, 1964, 44,204/64
10 Claims. (Cl. 200—39)

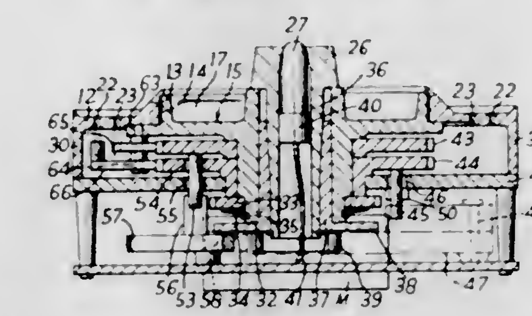

A device for effecting operation of a switch means to first and second switching positions in time relation, including a pair of rotatable toothed discs adapted to be selectively alternatively coupled to rotating pawls in a manner to cause movement of the discs to effect the first and second switching positions.

3,399,284
INDICATING DEVICE
Ayers Morison, Grosse Pointe, Mich., assignor to Miles Laboratories, Inc., Elkhart, Ind., a corporation of Indiana
Original application Dec. 18, 1961, Ser. No. 160,127. Divided and this application Mar. 23, 1966, Ser. No. 590,105
10 Claims. (Cl. 200—61.05)

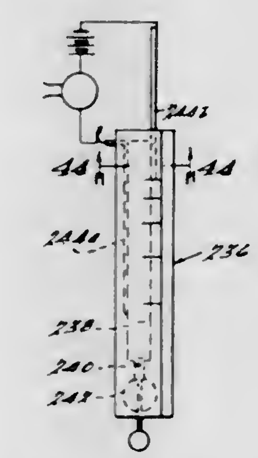

1. An indicator device for completing an electrical circuit on the completion of a measuring function comprising a porous capillary material characterized by connected voids of sufficiently small size to induce the progressive absorption of a fluid, an impervious covering material enclosing at least the major portion of the exterior surfaces of said capillary material and disposed in intimate contact therewith defining an absorptive cavity of a preselected volume, said device constructed to provide directional guidance through said absorptive cavity of an electrically conductive fluid contacting an exposed surface of said capillary material, a first electrical conductor in contact with a portion of said capillary material, a second electrical conductor in contact with a portion of said capillary material and spaced from said first conductor, said electrically conductive fluid adapted to complete an electrical circuit between said first and said second electrical conductors in response to the penetration of said fluid into said capillary material and into contact with said conductors.

3,399,285
TOGGLE SWITCH MECHANISM
Edward G. Haderer, Plainville, Mass., assignor to Texas Instruments Incorporated, Dallas, Tex., a corporation of Delaware
Filed Dec. 30, 1966, Ser. No. 606,336
13 Claims. (Cl. 200—67)

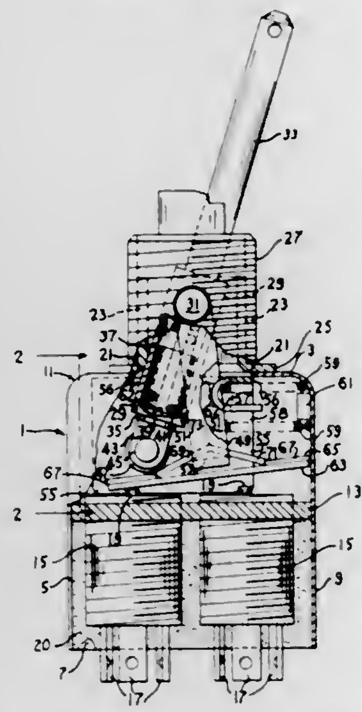

A toggle-type switch mechanism for actuating and deactuating switches wherein movements of a pivoted toggle arm force a roller over inclined surfaces pivotally mounted and underslung on the arm pivot, the roller shifting the positions of the surfaces for switch operation. In some embodiments, the roller is spring biased to enable it to be retracted and extended as it moves over the surfaces. In another embodiment the surfaces are resiliently mounted so that the surfaces deflect under pressure of the roller. In two embodiments the surfaces actuate a switch in either of two positions of movement. In another embodiment the mechanism can be positioned in a neutral position or in either of two moved positions.

3,399,286
HIGH VOLTAGE ELECTRIC SWITCH
Charles E. Kerr, Jr., Hillsboro, Oreg., assignor to Powerdyne, Inc., Lake Oswego, Oreg., a corporation of Oregon
Filed Mar. 7, 1966, Ser. No. 532,154
13 Claims. (Cl. 200—144)

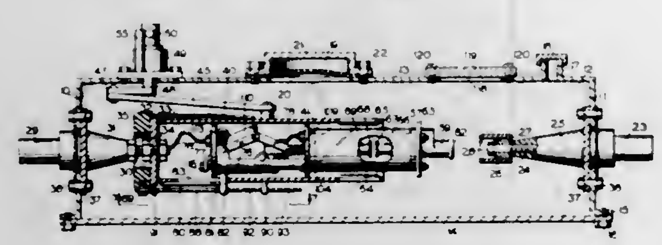

1. An electric switch comprising
(a) a housing,
(b) a pair of terminal members supported by the housing in spaced apart relation,
(c) a primary contact member engaging one of the terminal members,
(d) a secondary contact member engaging the other terminal member and movable relative to the primary contact member,
(e) a movable vacuum interrupter member having a fixed contact and a movable contact,
(f) contactor means connected to the fixed contact of the interrupter member and arranged for releasable engagement selectively with the primary contact member and secondary contact member, and
(g) conductor means interconnecting the movable contact of the interrupter member and the terminal member engaging the secondary contact member.

3,399,287
ROCKABLE PLATE TYPE ACTUATOR FOR A PLURALITY OF CONTACTS
George M. Euler, Normal, Ill., assignor to General Electric Company, a corporation of New York
Filed June 3, 1964, Ser. No. 372,311
9 Claims. (Cl. 200—159)

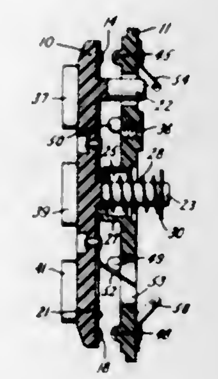

A hand control device for controlling a plurality of circuits includes an operator and a base secured together with each supporting a plurality of contacts in confronting cooperating relation. The operator is mounted for universal rocking movement in any direction relative to the base and the base carries a plurality of projections arranged to prevent engagement of more than an intended number of contacts in response to rocking movement of the operator. A housing encloses the operator and base and includes a flexible seal having a flexible wall overlying the operator to which force is applied to effect rocking movement of the operator.

3,399,288
CIRCUIT BREAKING APPARATUS AND METHOD FOR PULSE OPERATED ELECTRONIC SWITCH
Hans Schierholt, Iserlohn, Germany, assignor to Ingersoll Milling Machine Company, Rockford, Ill., a corporation of Illinois
Filed June 1, 1965, Ser. No. 460,359
Claims priority, application Germany, May 30, 1964, A 46,177
6 Claims. (Cl. 219—69)

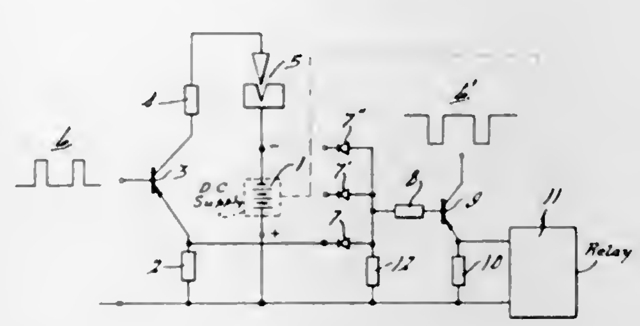

In combination with a spark-erosion machining power supply having one or more power transistors which are switched on and off to provide machining discharges, a protective circuit for terminating the current flow through the transistors in response to the leakage current through any one of them exceeding a preselected value. The protective circuit includes a control transistor which is effective when conductive to operate a relay for terminating the current flow through the power transistors. The control transistor is rendered conductive only between discharges when the leakage current through at least one of the power transistors exceeds the preselected value.

3,399,289
ELECTRODE HOLDER FOR RESISTANCE WELDER
David Sciaky, Chicago, Ill., assignor to Welding Research, Inc., Chicago, Ill., a corporation of Illinois
Filed Oct. 29, 1964, Ser. No. 407,465
10 Claims. (Cl. 219—86)

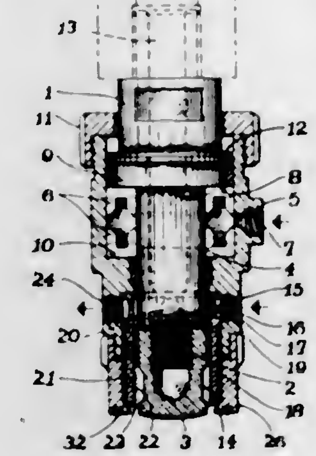

A method and apparatus for resistance welding of planar sheets by the direct-weld type which utilizes a pair of slideable electrodes disposed on each side of the sheets. Electrode holders incorporate either hydraulic or spring means for applying an adjustable force to the sheets over the entire surface of an annular area around the tip of each electrode so as to restrain the sheets from separating around the weld. Electrical insulation means are arranged in relation to the electrode so as to prevent welding current from flowing through the adjustable force means to the sheets. A cooling fluid is circulated about the outer surface of the electrode tips between the adjustable force means and the electrode tip. The adjustable force means includes a sealing means in contact with the sheets for preventing escape of the cooling fluid. A means is provided for adjusting the distance that the electrode tip is recessed within the adjustable force means.

3,399,290
IRIDIUM HEADING PROCESS
Milton K. Pardell, Mount Morris, Mich., assignor to General Motors Corporation, Detroit, Mich., a corporation of Delaware
Filed July 23, 1965, Ser. No. 474,315
7 Claims. (Cl. 219—150)

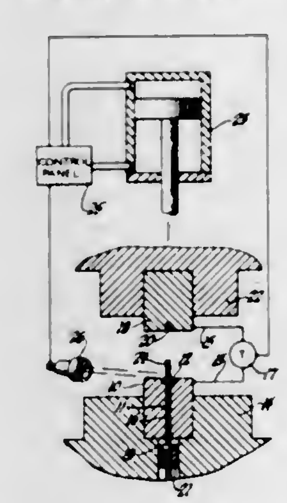

A method for forging iridium metal in an electrical die presset. The iridium metal is heated to a temperature just below the recrystallization temperature of the iridium metal, for example, 1700 to 1900° F., and subjected to pressure which causes the deformation of the iridium into the desired shape.

3,399,291
IMPULSE SEALING OF THERMOPLASTIC MATERIALS
Anthony P. Limbach, Somerset, N.J., assignor to Mobil Oil Corporation, a corporation of New York
Filed Apr. 26, 1966, Ser. No. 545,285
5 Claims. (Cl. 219—243)

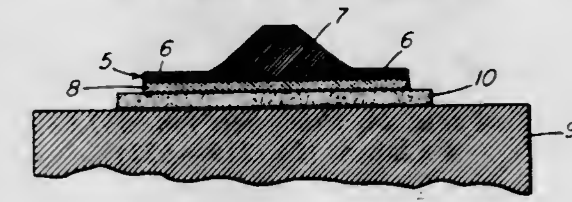

1. An impulse heating assembly comprising a band of metal, having high electrical resistance and coated on the back with a ceramic material, mounted on a block, provided with cooling means, with a resilient adhesive having high heat resistance; said band of metal being relatively thin near the outer edges and having a thicker raised central section.

3,399,292
HEATED PRESSURE ROLLER
Austin G. Boldridge, Jr., Ridgewood, N.J., assignor to Metal Skin Process Corp., Fairfield, N.J., a corporation of New Jersey
Filed Dec. 2, 1965, Ser. No. 511,192
4 Claims. (Cl. 219—469)

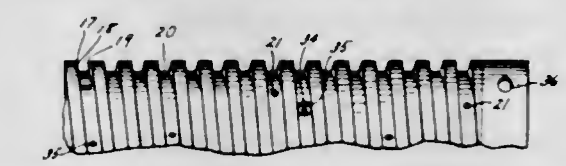

A heated pressure roller having an outer surface, there being a continuous spiral groove extending inwardly from said outer surface a depth sufficient to completely accommodate a heating element, and a thin synthetic resinous sleeve covering said outer surface and in direct proximity with the heating element.

3,399,293
ALTERNATING CURRENT ELECTRIC POWER CONTROL
Knud J. Knudsen, Daytona Beach., Fla., assignor to Lewis Engineering Company, Naugatuck, Conn., a corporation of Connecticut
Filed Apr. 2, 1965, Ser. No. 445,059
7 Claims. (Cl. 219—501)

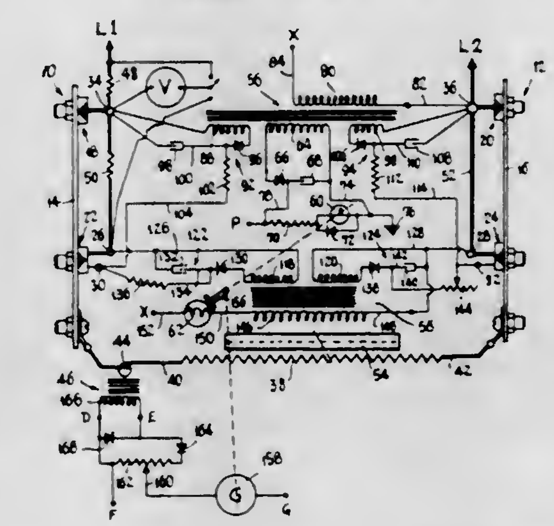

An automatic electric power control wherein an electric heater has a power circuit connected to it, with a power rectifier in the circuit and an SCR shunted across the power rectifier to conduct in an opposite direction. There is a control element which is responsive to heat from the heater, connected to the gate of the SCR for

the purpose of providing an automatically varying controlled bias voltage on the gate, thereby to effect a substantially constant average power in the heater.

3,399,294
HEATED INSULATED GLASS WINDOW STRUCTURE
Richard R. Thieben, 5402 N. 64th Ave., Phoenix, Ariz. 85033
Filed Jan. 24, 1966, Ser. No. 537,581
4 Claims. (Cl. 219—522)

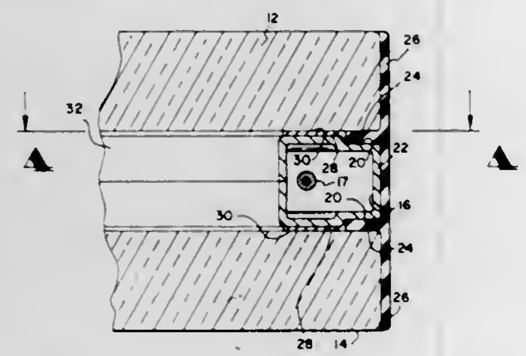

A heated insulated glass window structure having spaced apart panes hermetically sealed near their edges and held in spaced apart relation to each other by means of a hollow space element. An electric heating element internally of the hollow spacer element adapted to heat the panes and a space therebetween.

3,399,295
THERMOSTATICALLY CONTROLLED ELECTRIC IMMERSION HEATER UNITS
Gabriel A. Chaustowich, Detroit, Mich., assignor to Kem Krest Products Co., Detroit, Mich., a corporation of Michigan
Filed Oct. 20, 1965, Ser. No. 498,406
3 Claims. (Cl. 219—523)

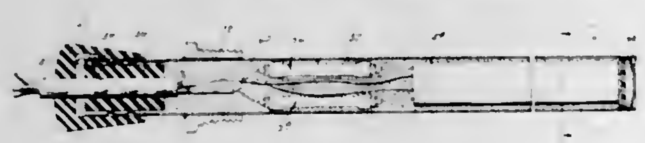

An electric heater unit for immersion heating a liquid has a pair of thermostats, each accommodating half of the power required by the unit, thereby preventing overloading of the thermostats and improving contact life. The thermostats and the heating coils of the unit are packed with in a suitable insulating material, e.g., granular magnesium oxide, and such establishes a feedback heat flow path, which is independent of the liquid in which the unit is immersed, making it possible for the thermostats to respond to temperature changes in the unit regardless of the extent to which the unit is immersed in the liquid.

3,399,296
CODE CHECKING MECHANISM
John E. Hickerson, Lexington, Ky., assignor to International Business Machines Corporation, New York, N.Y., a corporation of New York
Filed Sept. 29, 1964, Ser. No. 400,127
10 Claims. (Cl. 235—61.11)

An error detector for an encoding device which comprises a number of thin slides which are provided at different points along their length with code openings through which stop pins are inserted to retard the motion of certain slides and allow a limited motion for the remaining slides; the moving slides causing encoding mechanisms to be operated. The error detection means comprises sense pins associated with each of the stop pins, passing through check openings provided in the slides, associated with each of the code openings only when the slides have assumed the correct configuration and sense

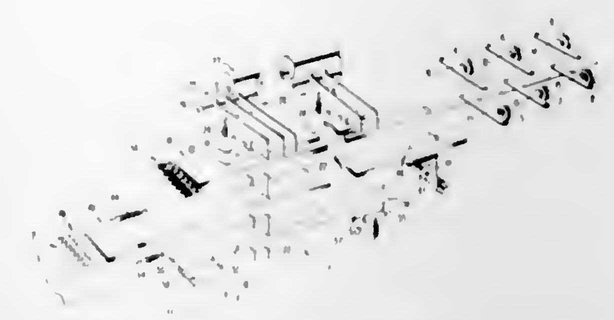

means indicating whether the sense pins had freely passed through all of the slides.

3,399,297
PRINTING APPARATUS
Robert L. Miller, Olmsted Falls, Ohio, assignor, by mesne assignments, to Brunswick Corporation, Chicago, Ill., a corporation of Delaware
Filed Jan. 17, 1964, Ser. No. 338,411
11 Claims. (Cl. 235—92)

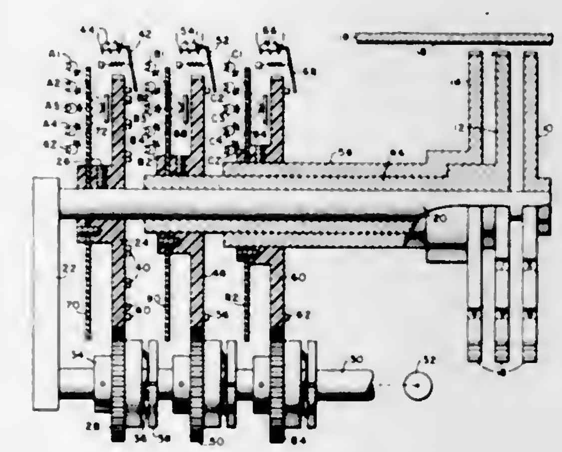

1. In apparatus of the type in which a rotatable member may be rotated to a predetermined angular position and stopped, the combination of a disc member coaxial with said rotatable member and rotatable therewith as a unit, a plurality of stationary light sources spaced along the radius of said disc member on one side thereof and arranged to direct light beams against one side of the disc member, a photocell positioned on the other side of the disc member opposite said light sources and adapted to conduct an electrical current whenever light from one or more of said sources falls thereon, said disc member being divided into separated and discrete arcuate sectors, all but one of said sectors having one or more ring sectors therein which are opaque and radially aligned with one or more of said light sources, means for energizing one or more of said light sources while simultaneously rotating the rotatable member and disc member until that sector having opaque ring sectors aligned with all energized light sources reaches the location of the light sources and photocell to block all light from the photocell, and means responsive solely to decreased current flow through the photocell with no light thereon for stopping the disc member and rotatable member.

3,399,298
DATA PROCESSOR PROFITABILITY MONITORING APPARATUS
Heather M. Taylor, Philadelphia, Pa. (633 Central St., Framingham Center, Mass. 01701)
Filed June 28, 1965, Ser. No. 467,264
23 Claims. (Cl. 235—92)

1. An apparatus for analyzing the operation of a data processor, for use with a data processor having a plurality

of different operational components each of which is adapted to provide a sensible characteristic manifestation indicative of its operating status and each of which operational components is adapted to be brought into operation at appropriate times in accordance with a predetermined program, said analyzing apparatus comprising counter means, switch means for selectively coupling said counter means to different ones of said data processor operational components in a desired sequence for count-

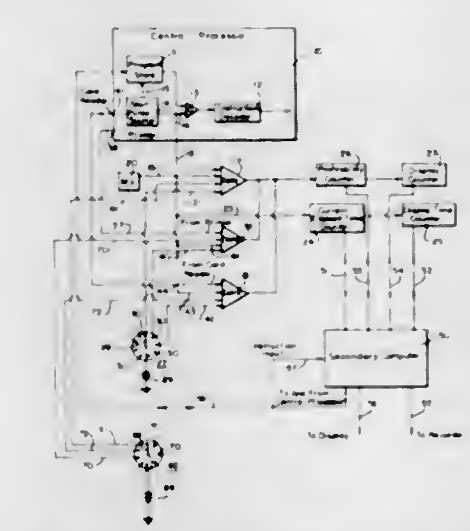

ing the sensible operating status manifestations of selected ones of said operational components in sequence, timing means responsive to operation of said switch means for determining the time interval during which said counter means monitors the operating status of each of said operational components, and output means jointly responsive to said counter means and to said timing means for determining the percentage efficiency of operation of said selected ones of said operational components during a selected monitoring time interval.

3,399,299
APPARATUS FOR PHASE STABILITY DETERMINATION
Grady B. Nichols, Lanham, Md., assignor to the United States of America as represented by the Administrator of the National Aeronautics and Space Administration
Filed Nov. 2, 1964, Ser. No. 408,442
4 Claims. (Cl. 235—154)

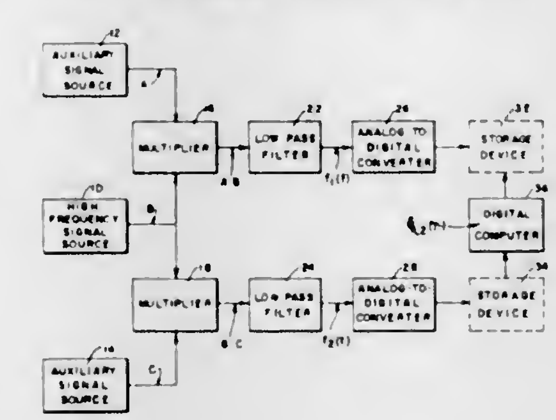

Apparatus for processing a high-frequency signal to be applied to correlation means to determine the phase stability thereof. Two auxiliary oscillators each provides a signal having the same characteristics as the high-frequency signal under consideration, and these are independently multiplied with the high-frequency signal to produce two product signals. High frequency components are removed from the product signal to provide two low frequency signals each having a component introduced by the phase instability of the original high frequency signal. These two low frequency signals, in turn, are digitized are are available to be applied to correlation apparatus whereby the phase and frequency instability of the high-frequency signal may be determined.

3,399,300
COMPUTING DEVICE INCLUDING AN ELECTRICAL DELAY LINE WITH A PLURALITY OF TAPS EACH CONNECTED TO A POTENTIOMETRIC NETWORK WHICH IS CONTROLLED BY A STRIP ELEMENT
Daniel Silverman, Tulsa, Okla., assignor to Pan American Petroleum Corporation, Tulsa, Okla., a corporation of Delaware
Filed Apr. 10, 1964, Ser. No. 358,870
12 Claims. (Cl. 235—193)

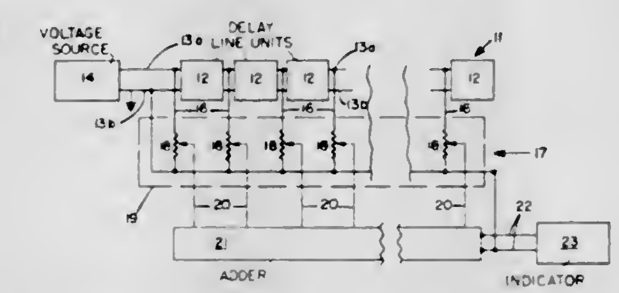

This invention concerns an improved computer apparatus which can be rapidly and economically adjusted to reflect changes in a function to be put to the computer. It includes an electrical delay line provided with a plurality of take-out taps spaced along its length. A multiplicity of potentiometric networks are connected to each of the taps. By adjusting these potentiometric networks, the computing function can be modified. An electrical summing network is connected to the potentiometric networks. A strip element having a characteristic representative of one of the functions of the computer is provided in which it varies along its length. The strip element cooperates with the potentiometric networks to set the desired ratio values to the potentiometric networks.

3,399,301
THERMOLUMINESCENT DOSIMETER FOR DETECTING RADIATION HAVING A PLURALITY OF COMPONENTS
Raymond Schayes and Isidore Kozlowitz, Brussels, Belgium, assignors to Societe Anonyme, Manufacture Belge Lampes et de Materiel Electronique, Brussels, Belgium
Filed Jan. 26, 1966, Ser. No. 523,107
Claims priority, application Belgium, Jan. 29, 1965, 8,416
3 Claims. (Cl. 250—71)

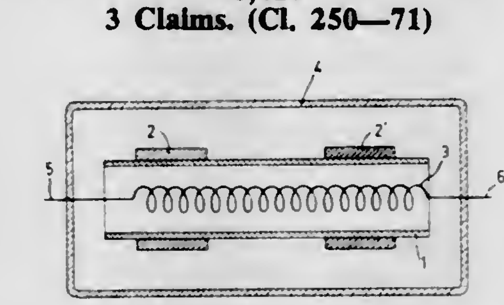

A thermoluminescent dosimeter employing two or more active elements mounted within a common envelope, each of the active elements being responsive to a particular form of radiation so that radiation having two or more components can be detected. A common heating element serves to heat the active elements simultaneously so that all radiation components can be detected simultaneously.

3,399,302
GAMMA RADIATION SENSOR AND DETECTION SYSTEM
Terry E. Carrell, Los Angeles, Calif., assignor to North American Rockwell Corporation, a corporation of Delaware
Filed June 19, 1964, Ser. No. 377,179
11 Claims. (Cl. 250—71.5)

6. A radiation detection system including an unshielded

radiation sensor responsive to gamma rays having first and second scintillation means optically decoupled from each other, said second means being protected from radiation other than gamma type radiation by said first means, means for electronically discriminating between gamma radiation impinging upon said first and second means which is within a preselected energy range and gamma radiation outside said range, said discriminating means having first photomultiplier means including a pair of photomultiplier tubes for generating a signal in response to the detection of a radiation event in said first scintillation means, and second photomultiplier means for generating a signal in response to the detection of a gamma radiation event in said second scintillation means, digital gate means responsive to both said first and second photomultiplier means for generating an output signal only when said pair of photomultiplier tubes of said first photomultiplier means simultaneously respond to a scintillation and said second photomultiplier means fails to generate a signal, linear gate means responsive to the signals on said pair of photomultiplier tubes and the simultaneous presence of an output signal from said digital gate to pass said signal from said pair of photomultiplier tubes, and means responsive to said linear gate signal for detecting and counting the number of signals during a preselected time period which represent gamma rays within a preselected energy range.

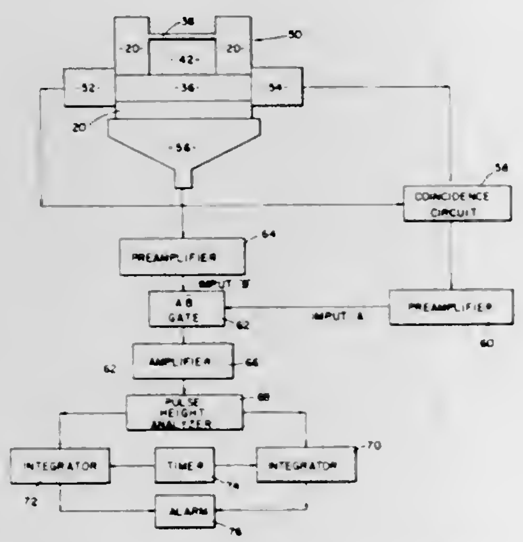

3,399,303
RADIOACTIVE METAL CORROSION EVALUATER AND METHODS THEREFOR
Sigmund Berk, Philadelphia, Pa., assignor to the United States of America as represented by the Secretary of the Army
Filed Mar. 4, 1965, Ser. No. 437,326
2 Claims. (Cl. 250—83.3)

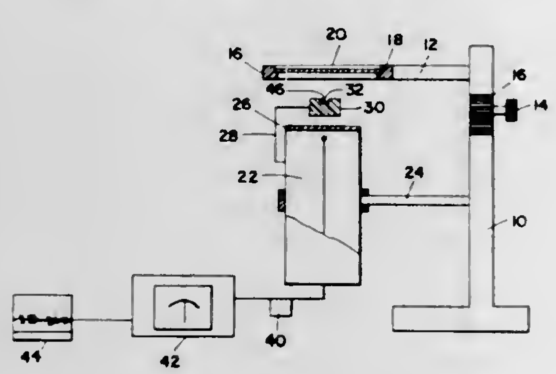

Processes for quantitatively determining corrosion of metal specimens by placing them close to a suitable radioactive source and comparing the backscattered radiation emitted from the specimen with a previously calibrated standard.

3,399,304
APPARATUS FOR ELIMINATING INTERELECTRODE LEAKAGE IN A PHOTOMULTIPLIER TYPE EXPOSURE CONTROL SYSTEM BY PROVIDING A COMPENSATING VOLTAGE
Rudolf Paulus, Munich, Germany, assignor to Agfa-Gevaert Aktiengesellschaft, Leverkusen, Germany
Filed Oct. 23, 1965, Ser. No. 502,931
Claims priority, application Germany, Nov. 27, 1964, A 47,714
11 Claims. (Cl. 250—207)

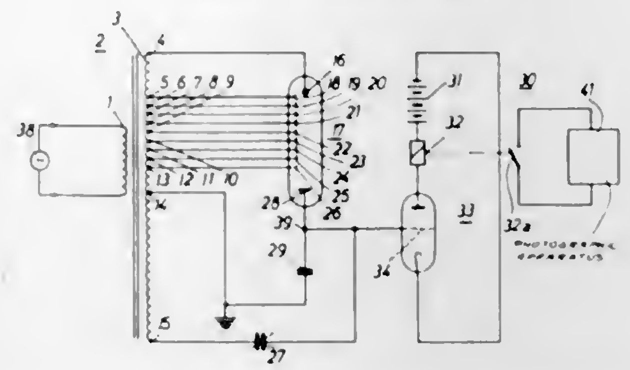

An exposure regulating circuit for photographic apparatus. A secondary electron multiplier having a photocathode, an anode and a plurality of dynodes is positioned so as to be exposed to the light impinging upon the photographic apparatus. This same light impinges also upon the photocathode and is amplified so as to provide a photocurrent at the anode corresponding to the intensity of the light. An alternating voltage is applied to the secondary electron multiplier through a transformer. The primary winding of the transformer is energized through an A.C. current. A plurality of taps on the secondary winding of the transformer leads to the photocathode and the dynodes of the secondary electron multiplier. An impedance is connected to the anode and has a voltage drop across it in accordance with the photocurrent resulting at the anode from the light impinging upon the cathode. When the voltage drop across the impedance attains a predetermined value, a signal is transmitted which actuates the exposure circuit of the photographic apparatus. The noise effects resulting from the A.C. voltage and stray capacitance of the electron multiplier are compensated by applying a compensating voltage to the impedance and thereby provides substantially accurate exposure control.

3,399,305
PHOTOSENSITIVE SYSTEMS FOR HANDLING INFORMATION
Henry C. Sibley, Spencerport, N.Y., assignor to General Signal Corporation, Rochester, N.Y., a corporation of New York
Filed Mar. 18, 1963, Ser. No. 265,920
22 Claims. (Cl. 250—209)

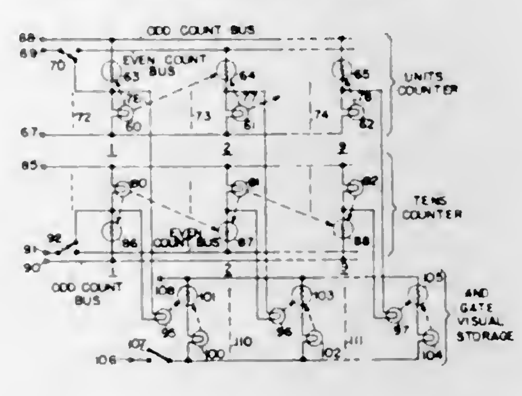

12. An information handling system comprising a plurality of stages, each of said plurality of stages including a light emitting element and a light receiving element connected electrically in series, said light receiving element normally having a substantially high resistance but reducible to a low resistance in response to received light energy, coupling means positioned relative to said plurality of stages for optically coupling emitted light energy from each said light emitting element to irradiate only the light receiving elements of the corresponding stage and the succeeding stage, means for electrically connecting one element of each stage of said plurality to one terminal of an energy source while electrically connecting the other elements included with first alternate stages of said plurality to the other terminal of the energy source, light radiation input means selectively effective to irradiate at least one of said light receiving elements corresponding to a selected stage of the first alternate stages causing that light receiving element to assume a low resistance condition for energizing the light emitting element of that stage, and input means operative to electrically connect momentarily the other elements included with second alternate stages of said plurality to the other terminal of the energy source, whereby all light emitting elements corresponding to the stages of said second alternate stages of said plurality having their respective light receiving elements irradiated by the light emitting element of the preceding stage included with said first alternate stages therein energized are energized and irradiate a successive light receiving element corresponding to a stage of said first alternate stages thereby causing energization of the light receiving element of that stage.

3,399,306
PHOTOCELL ARRANGEMENT CIRCUITRY TO CHECK LONGITUDINAL REGISTER BY PRINTING, WITH ERROR PREVISION AND ADVANCED CORRECTIONS
Antonio Guastavino, Milan, Italy (% Ing. Pietro Guazzo, Via XX Settembre 74, Turin, Italy)
Filed Mar. 9, 1964, Ser. No. 350,941
Claims priority, application Italy, Mar. 13, 1963, 689,336/63
8 Claims. (Cl. 250—219)

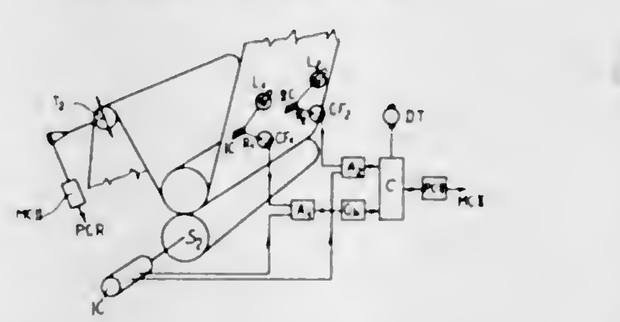

Checking of longitudinal register in rotogravure printing machines is effected by electronically calculating the average error in two space-adjoining groups of paper formats (the errors resulting from misaligned preprinted register marks), computing a differential value between the two averages proportional to the speed in variation of the mis-register, and correcting the error as a function of the magnitude of misregister and of speed of its variation.

3,399,307
MOTION SENSING EXPOSURE SYSTEM FOR OPTICAL INSTRUMENTS
Herman Levin, Glenview, Ill., assignor to Bell & Howell Company, Chicago, Ill., a corporation of Illinois
Filed May 20, 1965, Ser. No. 457,440
25 Claims. (Cl. 250—224)

17. In an automatic light exposure system, the combination comprising:

(a) motion sensing means including photoresponsive means, first optical means having alternately disposed areas of different light transmitting characteristics which is located to receive light from a scene and to transmit said light to impinge upon said photoresponsive means such that relative transverse movement between said first optical means and an object in the scene causes a cyclic variation in the light upon said photoresponsive means, A.C. amplifier means connected to said photoresponsive means for producing an A.C. signal whose frequency varies with the frequency of said light cyclic variation, pulse forming means responsive to said A.C. signal for generating a train of substantially equal width-equal amplitude electrical pulses whose frequency varies

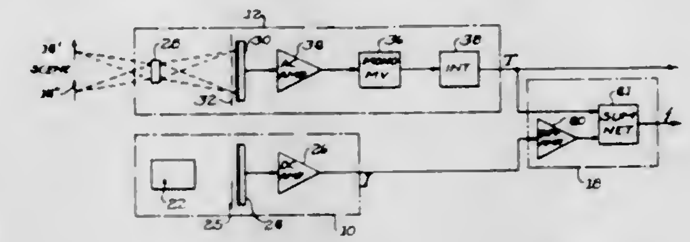

with the frequency of said A.C. signal, and time integrating means responsive to said electrical pulses for generating a first D.C. signal which varies in amplitude with their frequency;

(b) illumination sensing means responsive to light from the scene for generating a second D.C. signal which varies in amplitude with the intensity of the scene illumination;

(c) and computing means combinating said first and second D.C. signals for generating a third D.C. signal which is variable in amplitude.

3,399,308
SCANNER ASSEMBLY WITH AUTOMATICALLY RECIPROCATING PHOTOELECTRIC TRANSDUCER HAVING ADJUSTABLE SLIT
John Taylor, Santa Clara, Calif., assignor to Beckman Instruments, Inc., a corporation of California
Filed Sept. 1, 1965, Ser. No. 484,330
7 Claims. (Cl. 250—235)

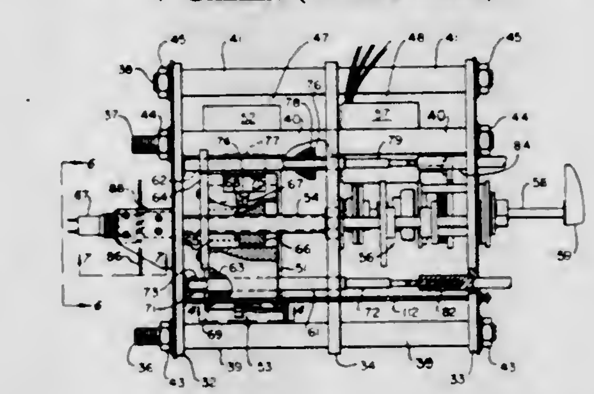

1. A scanner assembly comprising a carriage, a photoelectric transducer carried by said carriage, an adjustable slit assembly for controlling the energy impinging on said transducer, guide means for guiding said carriage for movement back and forth, moving means for reversibly moving said carriage along said guide means, an adjustable stop for limiting movement of said carriage in one direction, yieldable means interposed between said moving means and said carriage to permit movement of the moving means after the carriage engages said adjustable stop, and means for adjusting said slit while the carriage is in motion.

3,399,309
PARAMETRIC CIRCUITS
William John Bartik, Jenkintown, Woo Foung Chow, Horsham, John Boss Schwarz, Abington, and John Vincent Murphy, Norristown, Pa., assignors to Sperry Rand Corporation, New York, N.Y., a corporation of Delaware
Filed Nov. 12, 1963, Ser. No. 322,818
9 Claims. (Cl. 307—88)

A logic system of parametrons is disclosed. The para-

metron circuit consists of a plated magnetic wire about which a resistor wire is wound to form a resonant circuit. The resonating capacity and tank damping resistors

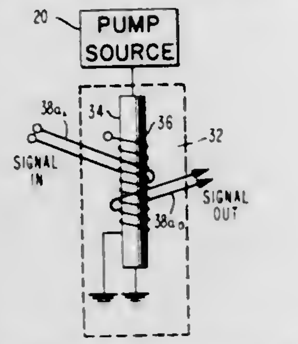

are replaced by self-capacitance and self-resistance of the resistance wire.

3,399,310
ELECTRONIC SYNCHRONIZING PULSE TRANSMITTER
Werner Vogler and Heinz Lütge, Erlangen, and Ulrich Michael, Munich, Germany, assignors to Siemens Aktiengesellschaft, Munich, Germany, a corporation of Germany
Filed Oct. 22, 1965, Ser. No. 502,168
Claims priority, application Germany, Mar. 31, 1965, S 96,294
15 Claims. (Cl. 307—108)

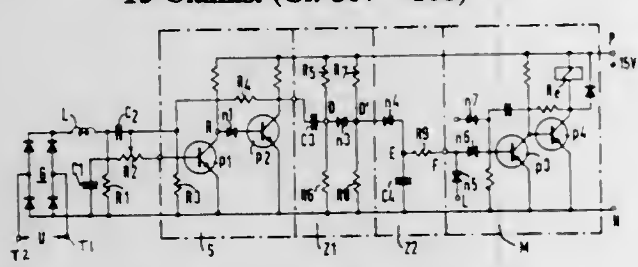

1. An electronic synchronizing pulse transmitter for controlling the parallel switching of an alternator onto an alternating-current line, comprising error voltage supply means for supplying a beat-frequency voltage corresponding to the difference between line voltage and alternator voltage, a capacitor circuit having a capacitor and having means connected to said capacitor for reversely charging it within a given total reverse charging period corresponding to a beat-frequency of not more than about 0.5 c.p.s., comparator means connected to said error voltage supply means and said capacitor circuit means for comparing the time spacing of the beat-frequency nodes of said error voltage with said charging period, and pulse release means connected to said comparator means for releasing a switching command in response to said node spacing being longer than said total reverse charging period of said capacitor.

3,399,311
FREQUENCY DIVIDER EMPLOYING INDUCTIVE SWITCHING
John J. Andrea, Marion, Iowa, assignor to Collins Radio Company, Cedar Rapids, Iowa, a corporation of Iowa
Filed Aug. 4, 1966, Ser. No. 572,645
11 Claims. (Cl. 307—225)

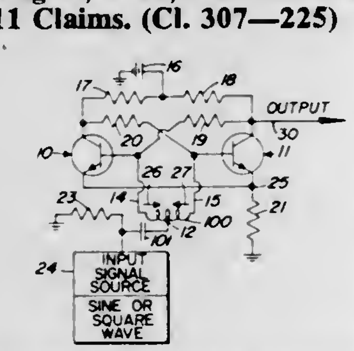

A frequency divider employing a multivibrator type circuit having a pair of transistors with the base electrodes connected together by a tapped inductor. An A-C input signal is applied to the tap to control the switching rate of the multivibrator. The tapped inductor functions as a very stable, electrical flywheel to enable accurate frequency division over quite large frequency and temperature ranges. Output signals can be taken from the collector or emitter of either transistor.

3,399,312
MULTIPLIER/DIVIDER CIRCUIT
Stephen B. Gray, Newton, Mass., assignor to Sylvania Electric Products Inc., a corporation of Delaware
Filed May 5, 1965, Ser. No. 453,402
3 Claims. (Cl. 307—229)

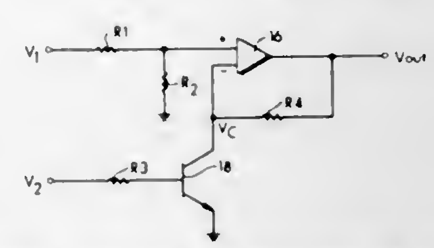

A multiplier/divider circuit employing transistors operating in the saturation region wherein the collector-emitter voltage is a linear function of collector current and base current. A single transistor stage is employed in a feedback arrangement with a differential operational amplifier to provide multiplication.

3,399,313
PHOTOPARAMETRIC AMPLIFIER DIODE
David E. Sawyer, Northboro, Mass., assignor to Sperry Rand Corporation, Great Neck, N.Y., a corporation of Delaware
Filed Apr. 7, 1965, Ser. No. 446,215
7 Claims. (Cl. 307—311)

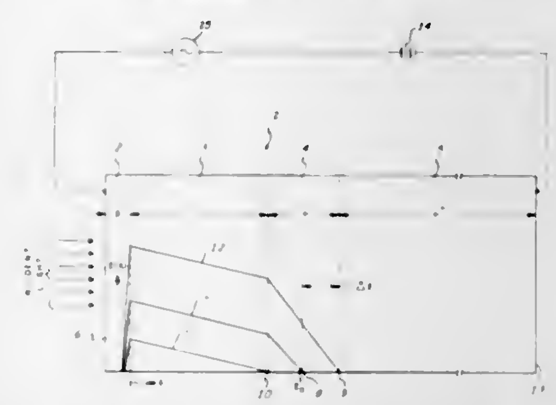

Photoparametric amplifier means including a source of bias signal, a source of pump signal and a multi-layered semiconductor wafer wherein the successive layers are of p, i, n and n+ conductivity types, the "i" layer being slightly "n" in conductivity type. The surface of the "p" conductivity layer is illuminated by modulated light. The bias and pump signals produce within the wafer a junction field whose terminal edge moves solely within the "n" conductivity layer.

3,399,314
ULTRASONIC SIGNAL APPARATUS
Edward H. Phillips, Los Altos, Calif., assignor to Hewlett-Packard Company, Palo Alto, Calif., a corporation of California
Filed Nov. 12, 1965, Ser. No. 507,500
4 Claims. (Cl. 310—8.2)

A plurality of piezoelectric crystals are acoustically coupled in a body. Apparatus is provided for altering the stress conditions of the crystals in a manner to reinforce an acoustical signal as it travels through the body. This apparatus may comprise a timing circuit for sequentially delaying application of an electrical signal to selected ones

of the crystals by time intervals corresponding to the transit times required for an acoustical signal generated by one of the crystals and travelling through the body to reach the selected crystals. The timing circuit may be connected directly to a source of electrical energizing pulses, or it may be connected by means of a switch first to a source of electrical energizing potential for setting the crystals to an initial stressed condition and then to a source

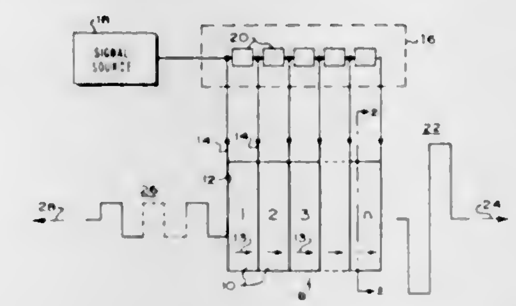

of electrical reference potential for resetting the crystals to an unstressed condition. Alternatively, this apparatus may comprise a source of electrical energizing signal connected to selected ones of the crystals and operated in a continuous wave mode. A phase inverter may also be connected between this source and selected ones of the crystals to effectively double the amplitude of the acoustical signal produced by the crystals.

3,399,315
ONCE-THROUGH LIQUID METAL PISTON MHD GENERATOR
James R. Powell, Jr., Rocky Point, N.Y., assignor to the United States of America as represented by the U.S. Atomic Energy Commission
Filed Sept. 22, 1965, Ser. No. 489,439
3 Claims. (Cl. 310—11)

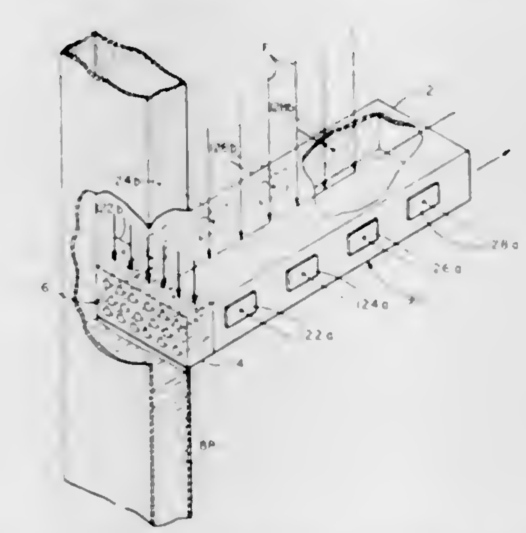

A liquid metal magnetohydrodynamics generator in which mercury is vaporized and the pressure thereof is utilized to pump slugs of mercury down a tube subject to a magnetic field and containing electrodes to tap the EMF developed. Entrance to the tube is exposed to a fluctuating level of liquid mercury to produce the slugs in the tube.

3,399,316
VIBRATING-REED TYPE ELECTRIC INSTRUMENT WITH BUILT-UP FIELD AND COIL SUPPORT
Raoul A. Forest, Jr., New Haven, Conn., assignor to J-B-T Instruments, Inc., New Haven, Conn., a corporation of Connecticut
Filed Jan. 25, 1966, Ser. No. 522,883
4 Claims. (Cl. 310—25)

1. A vibrating-reed type electric instrument comprising, in combination:

(a) a set of vibratable reeds disposed in a row,
(b) an exciting coil surrounding said reeds, and
(c) a combined field and coil supporting structure, said structure including a magnetic circuit having an air gap in which the reeds are disposed, and further comprising:
 (1) a substantially flat magnetic base plate of sheet metal,
 (2) a pair of parallel magnetic posts disposed with one end each in abutting relation to spaced-apart areas of the base plate,
 (3) an annular permanent magnet which is magnetized with north and south poles at opposite ends of its axis, said magnet being included in one of said posts to effect a flux through the posts and base plate,
 (4) said posts having bores and being secured to-

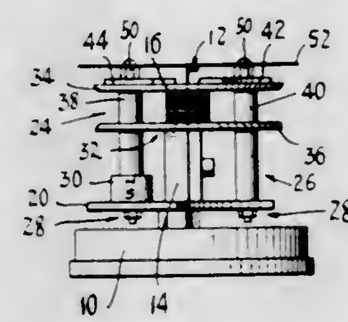

gether and to said base plate by draft elements passing through the posts and plate,
 (5) a bobbin on which the coil is wound, having end plates through which said posts and draft elements pass, portions of said posts being disposed in the space extending between said end plates, and
 (6) a pair of substantially flat sheet metal pole pieces secured broadside to the free ends of the magnetic posts and arranged to overlie one end plate of the bobbin,
 (7) said one end plate being secured to said pole pieces and both end plates having clearance holes through which the magnetic posts extend,
 (8) said bobbin and coil being supported by said pole pieces.

3,399,317
MOTION DAMPER
Louis K. Davis, Phoenixville, Pa., assignor to General Electric Company, a corporation of New York
Filed Apr. 24, 1964, Ser. No. 362,216
5 Claims. (Cl. 310—93)

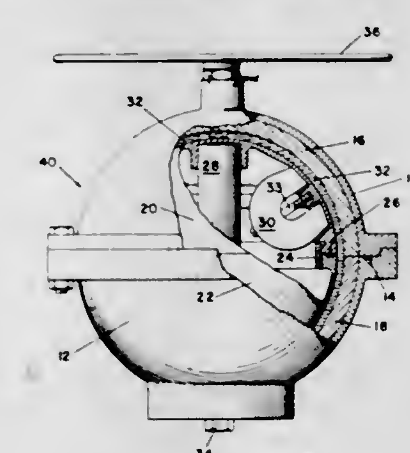

Inside a spherical enclosure of diamagnetic material there is provided a spherical member free to rotate, and containing an array of permanent magnets whose fields repel the diamagnetic material, tending to keep the member centered in the housing, and combine to produce a net magnetic field external to the enclosure to interact with an external ambient magnetic field. Damping means

are provided to damp relative motion of the member with respect to the enclosure.

3,399,318
PERMANENT MAGNETIC ROTOR FOR ELECTRIC MACHINES, ESPECIALLY SYNCHRONOUS MINIATURE MOTORS
Franz Mayer and Alfred Meisner, Nurnberg, Germany, assignors to Diehl, Nurnberg, Germany
Filed Oct. 4, 1965, Ser. No. 492,791
Claims priority, application Germany, Oct. 15, 1964, D 45,639
6 Claims. (Cl. 310—156)

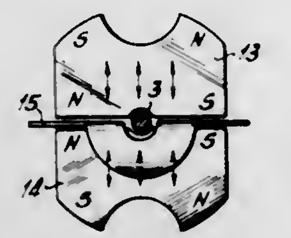

A permanent magnetic diametrically magnetized rotor for electric miniature motors, which includes a shaft and two substantially identical approximately semi-cylindrically contoured sections arranged on said shaft so as to form an image to each other while facing each other along a plane parallel to the longitudinal direction of said shaft, said rotor sections being of powdered magnetic material compressed in a direction perpendicular to the axis of rotation of said rotor with the lines of magnetic flux extending approximately in a direction perpendicular to the said plane, poles of uniform polarity of said two rotor sections being arranged symmetrically with regard to said plane whereby the magnetic lines of flux impacting upon each other in said plane are deviated radially outwardly to leave the said rotor in concentrated condition.

3,399,319
COLOR KINESCOPE MOUNTING ASSEMBLY FOR SHIFTING SHADOW MASK DURING THERMAL EXPANSION
James W. Schwartz, Western Springs, and Laszlo Javorik, Chicago, Ill., assignors to National Video Corporation, Chicago, Ill., a corporation of Illinois
Filed Oct. 18, 1966, Ser. No. 587,530
10 Claims. (Cl. 313—85)

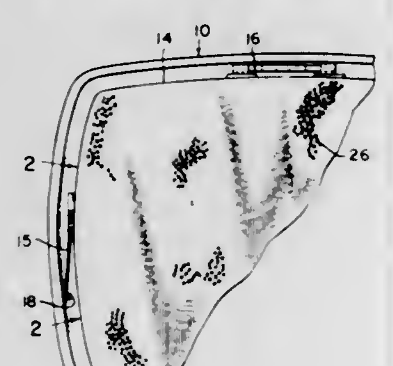

A shadow mask is mounted within a color television tube adjacent the viewing screen for correcting misregistration due to thermal expansion of the mask relative to the screen as the mask is heated by impinging electron beams. Each mounting assembly includes a connector adapted to be fitted on supporting posts embedded in the flanges of the faceplate panel and rigid, curved member fastened to the clip and to the frame of the shadow mask at two separate locations defining a plane generally parallel to the plane of the mask. The rigid member has a coefficient of thermal expansion different from that of the shadow mask, and when the shadow mask is heated, the uneven expansion causes the curved member to straighten out thereby shifting the shadow mask axially of the tube and closer to the viewing screen for correcting misregistration.

3,399,320
POLYCHROME STRIPED SCREENS FOR COLOR TELEVISION RECEIVER COMPRISING FILAMENTS OF HOMOGENEOUS GLASS
Pierre Ivan Peyches, Paris, France, assignor to Compagnie de Saint-Gobain, Neuilly-sur-Seine, France
Original application Dec. 23, 1960, Ser. No. 78,077, now Patent No. 3,256,124, dated June 14, 1966. Divided and this application Dec. 7, 1965, Ser. No. 512,155
Claims priority, application France, Apr. 30, 1959, 793,638; Apr. 22, 1960, 824,986
6 Claims. (Cl. 313—92)

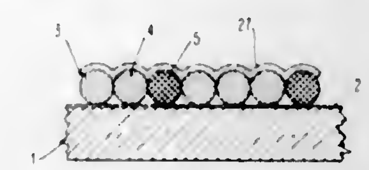

1. A television screen having a transparent glass support, a layer of transparent enamel coating a face thereof, a multiplicity of filaments of colored glass attached to the enamel in repeating sets of at least three primary colors, each filament consisting of homogeneous glass of circular cross-section which is tangentially in contact with the filaments beside it, conjointly defining an engrailed surface, and a continuous layer of white luminescent material covering the engrailed surface.

3,399,321
INCANDESCENT LAMP WITH FILAMENT CONSISTING OF A HEXABORIDE OF A RARE EARTH METAL
Erhard Kauer, Aachen, Germany, assignor to North American Philips Company, Inc., New York, N.Y., a corporation of Delaware
Filed July 15, 1965, Ser. No. 472,203
Claims priority, application Gemany, July 16, 1964, N 25,261
8 Claims. (Cl. 313—218)

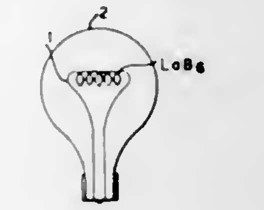

An incandescent lamp employing a filament emitting principally visible radiation at the operating temperature and consisting of a material having a concentration of charge carriers between 2×10^{21} and 2×10^{22}, the charge carriers having a mobility at the operating temperature of at least 2 cm.^{2}/volt-sec.

3,399,322
CARBON ROD ASSEMBLIES FOR ARC GOUGING OF STEEL
Michio Ambe, Kaizu-gun, Gifu-ken, Japan, assignor to Ibigawa Electric Industry Co., Ltd., Ogaki-shi, Gifu-ken, Japan, a corporation of Japan
Filed Oct. 21, 1965, Ser. No. 499,884
Claims priority, application Japan, Aug. 30, 1965, 40/70,759
5 Claims. (Cl. 313—357)

A carbon rod assembly is provided in which the individual rods include a substantially cylindrical socket at one end and an axial projection at the other end. An uninterrupted copper coating is present on the exterior of each rod including the inner wall of the socket and outer surface of the projection. The projection is provided with an axial slot to impart resiliency thereto. The length of

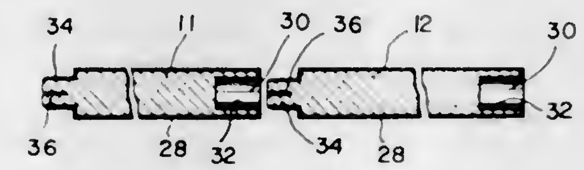

the projection is smaller than the socket is deep; and its outer diameter slightly larger than the inner diameter of the socket. The individual rods are thusly adapted to be joined by inserting the projection of one rod into the socket of another rod and secured firmly by the resiliency of the projection.

3,399,323
COLOR CONTROL SYSTEM FOR A TELEVISION PICTURE TUBE
John R. Doll, 625 Windsor Terrace SE., Grand Rapids, Mich. 49503
Filed Jan. 6, 1966, Ser. No. 519,062
3 Claims. (Cl. 315—18)

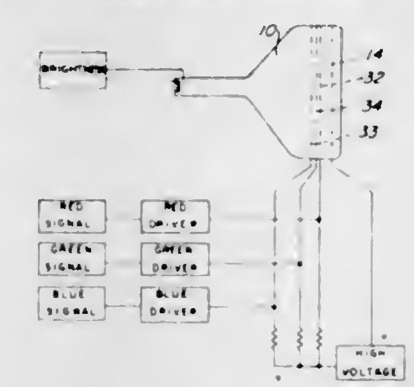

1. In combination with a color television picture tube having components which include electron beam-emission means and a screen, a color control system comprising:

at least three overlaid sets of parallel grid wires disposed in planes transverse to the path of said beam, and between said emission means and said screen, said sets extending in planes angularly displaced with respect to each other to produce a plurality of triangular openings between said grid wires normally traversed intermittently by said beam;

color-response material mounted on said screen according to a pattern in which groups of at least three primary color areas are arranged in sectors about an origin, each of said sectors containing a particular color response material, and said groups being arranged with respect to each other so that one of said areas is common to two adjacent groups, with the exception of marginal areas at the edge of said screen, said origins being disposed on a line extending from said emission means through the central area of said triangular openings; and

circuit means connected to each of said sets of grid wires to bias the same in response to received signals.

3,399,324
TELEVISION CAMERA CIRCUITS
Barry S. Brown, Batavia, N.Y., assignor to Sylvania Electric Products Inc., a corporation of Delaware
Filed Feb. 9, 1965, Ser. No. 431,405
3 Claims. (Cl. 315—20)

A beam scanning tube protection circuit employs sensors to directly monitor the current and voltages associated with the deflection coils of the tube. The circuit converts the current and voltage thus monitored into a blanking

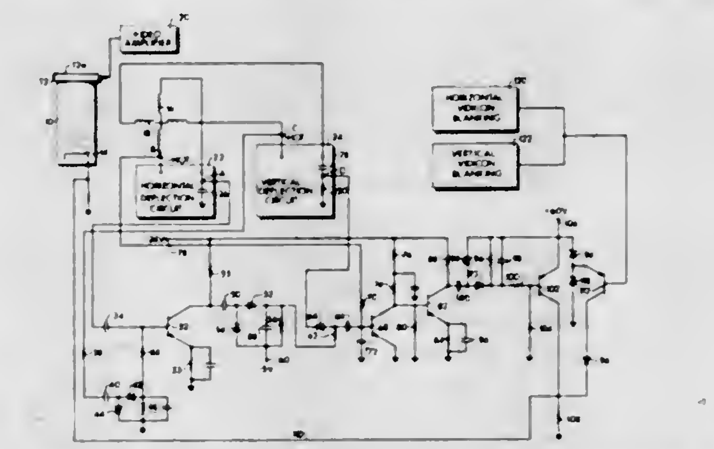

signal in the event of an open or a short circuit in the deflection coils.

3,399,325
ARRANGEMENT FOR REDUCING LOCALLY GENERATED RADIO FREQUENCY INTERFERENCE
Dănilă Teodor, bd. Muncii 90; Plesoianu Titus, Str. Drum. Taberei; and Zamfir Gheorghe, Str. St. Velicu 3, all of Bucharest, Rumania
Filed Apr. 12, 1965, Ser. No. 447,331
Claims priority, application Rumania, Apr. 21, 1964, 47,840
2 Claims. (Cl. 315—27)

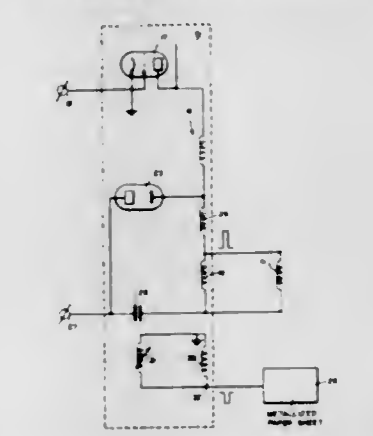

An improved arrangement for reducing radiation from an unshielded coil fed by radio frequency pulses from a suitable source is described. An unshielded antenna element adapted to radiate at the frequencies of the spurious radiation is mounted adjacent the coil. The element is excited in phase opposition to the coil from a separate portion of the source. The geometry and the position of the element are chosen so that the amplitude of the radiation from the element is substantially equal to the spurious radiation from the coil.

3,399,326
TRAVELLING WAVE TUBE HAVING A GRAPHITE COATING IN THE CENTRAL REGION AND THE FREE ENDS AT LEAST 10 WAVELENGTHS LONG AND A QC OF AT LEAST 0.4
Johannes Antonius Bernardus Dechering, Jacob Ober, and Anne Meijer, Emmasingel, Eindhoven, Netherlands, assignors to North American Philips Company, Inc., New York, N.Y., a corporation of Delaware
Filed Sept. 10, 1964, Ser. No. 395,383
2 Claims. (Cl. 315—3.5)

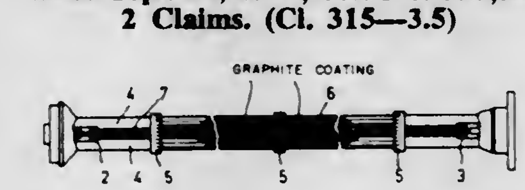

A travelling wave tube capable of amplifying an elec-

trical signal substantially without amplitude distortion and A.M. to P.M. conversion having attenuating material distributed about the center portion of the slow-wave helix while portions at both ends are free of attenuating material. The attenuation per unit length at the center portion is constant while the length of the output portion free of attenuating material is at least ten wavelengths the value of the QC for the tube being at least 0.4.

3,399,327
PLURAL GASEOUS ELECTRIC DISCHARGE DEVICE STARTING CIRCUIT USING AN UNIGNITED DISCHARGE DEVICE AS BALLAST
Shungo Furui, Yokohama, Japan, assignor of twenty-five percent to Yasuka Akamatsu, Sacramento, Calif.
Filed Feb. 24, 1967, Ser. No. 618,421
Claims priority, application Japan, Mar. 3, 1966, 41/12,598
1 Claim. (Cl. 315—189)

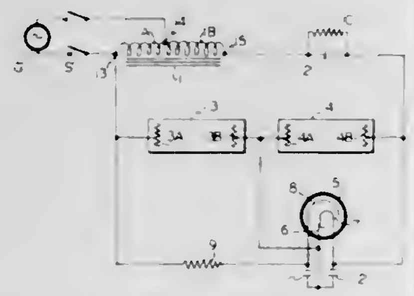

This invention relates to a circuit for starting two or more gaseous discharge lamps which are connected in series to a voltage source, comprising impedance means connected in parallel to one of said lamps, and a glow switch having normally closed contacts connected in series with said impedance means and in parallel with another of said lamps, said glow switch initially short circuiting said other lamp thereby to enable starting of said one lamp and subsequently upon firing of said glow switch removing said short circuit to cause said other lamp to start.

3,399,328
ELECTROCHEMILUMINESCENCE OF 2,3,6,7-TETRAPHENYLISOBENZOFURAN AND RELATED MATERIALS
Arnold Zweig, Westport, Conn., assignor to American Cyanamid Company, Stamford, Conn., a corporation of Maine
Filed Nov. 22, 1965, Ser. No. 509,148
9 Claims. (Cl. 315—246)

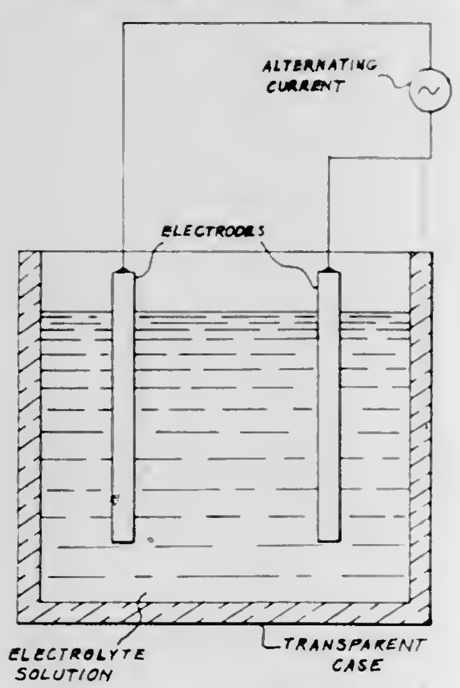

A method and means for obtaining light by passing an alternating current between electrodes in an electrolyte having a tetra-aromatic substituted isobenzofuran fluorescent compound in an inert solvent.

3,399,329
SANITARY AND PROTECTIVE COVERING FOR SHOES
Harold Zimmon, Belmont, Calif., assignor to Zimmon & Company, Inc., Belmont, Calif., a corporation of California
Continuation-in-part of application Ser. No. 404,310, Oct. 16, 1964. This application Oct. 24, 1966, Ser. No. 588,911
6 Claims. (Cl. 317—2)

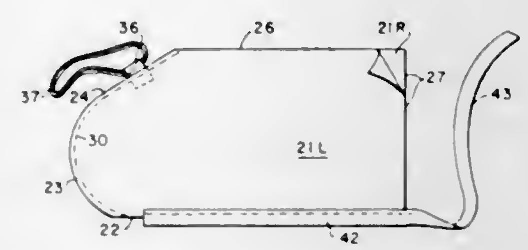

A sanitary and protective covering for street shoes for use in surgeries, and the like, is formed of paper-like material in two halves, each shaped in the outline of a shoe in side elevation, and joined together along the bottom and front but open at the top and back. A rubber band is attached to the covering about at the instep. In use, the shoe is inserted in the covering. The rear edges of the halves are folded around the back to conform the covering to a wide range of shoe sizes. The rubber band is stretched down around the front of the toe, under the sole and behind the back of the shoe to hold the covering in place.

3,399,330
SOLID STATE DEVICE FOR OPENING AND CLOSING AN ELECTRICAL CIRCUIT
Norma J. Vance, 1460 Sandberg Terrace, Chicago, Ill. 60610
Filed May 16, 1966, Ser. No. 550,187
5 Claims. (Cl. 317—232)

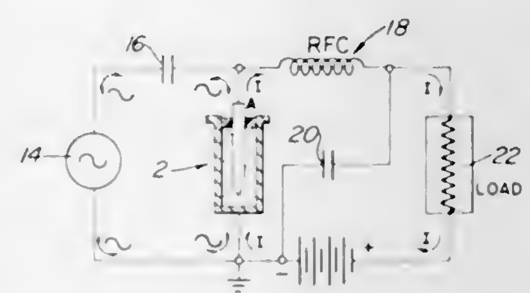

A solid state electrical device has a ferrite material disposed between electrodes. The material exhibits a high resistance in one state and a low resistance in another state, the states being reversibly changeable by application of current of one or the other polarity respectively.

3,399,331
ELECTRICAL DEVICE AND CONTACTS
Walter E. Mutter, Poughkeepsie, and Edward D. Purcell, Wappingers Falls, N.Y., assignors to International Business Machines Corporation, New York, N.Y., a corporation of New York
Filed Dec. 24, 1964, Ser. No. 421,035
15 Claims. (Cl. 317—234)

A semiconductor device capable of withstanding elevated processing temperatures, the active regions therein having ohmic contacts thereto comprising a composition having relative amounts by weight of carbon and a metal from the platinum group of metals. A preferred compo-

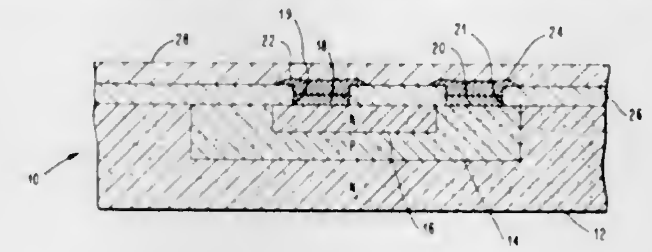

sition is 91–93% Pt and 7–9% C. Additional contact materials are disclosed.

3,399,332
HEAT-DISSIPATING SUPPORT FOR SEMICONDUCTOR DEVICE
Unto U. Savolainen, Attleboro, Mass., assignor to Texas Instruments Incorporated, Dallas, Tex., a corporation of Delaware
Filed Dec. 29, 1965, Ser. No. 517,350
10 Claims. (Cl. 317—234)

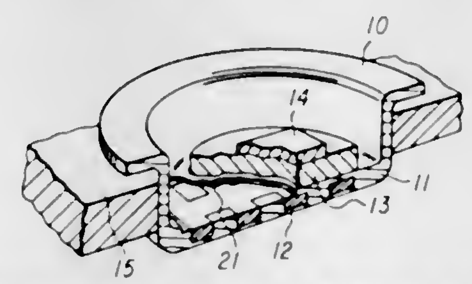

A heat-dissipating support for a device of selected coefficient of thermal expansion such as a semiconductor device is shown to comprise a layer of metal of relatively high thermal conductivity and coefficient of thermal expansion having a metal grid embedded in the layer, the metal of the grid having a coefficient of thermal expansion substantially lower than that of the metal layer for restraining thermal expansion of the layer to substantially match the thermal expansion of the semiconductor device.

3,399,333
SPEED CONTROL CIRCUIT FOR SINGLE PHASE ALTERNATING CURRENT INDUCTION MOTORS
James A. Canter, Dayton, Ohio, assignor to General Motors Corporation, Detroit, Mich., a corporation of Delaware
Filed Jan. 3, 1966, Ser. No. 519,400
1 Claim. (Cl. 318—227)

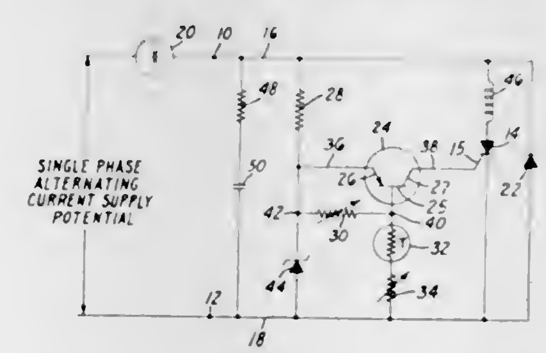

A speed control circuit which is sensitive to conditions of ambient temperature to vary the speed of a single phase alternating current induction motor. The parallel combination of a silicon controlled rectifier and an oppositely poled conventional diode is connected in series with the motor to be controlled and a source of alternating current potential. A resistance divider network including at least one temperature sensitive resistance device is connected across the alternating current source to provide a control signal for the silicon controlled rectifier at a time as determined by existing conditions of the influencing temperature.

3,399,334
SERVO CONTROLLED MOTOR DRIVE WITH A MECHANICAL FILTER BETWEEN THE MOTOR AND THE DRIVEN MEMBER
Donald B. MacLeod, Redwood City, Calif., assignor to Ampex Corporation, Redwood City, Calif., a corporation of California
Original application Apr. 20, 1964, Ser. No. 360,921, now Patent No. 3,342,951. Divided and this application Mar. 27, 1967, Ser. No. 649,376
9 Claims. (Cl. 318—329)

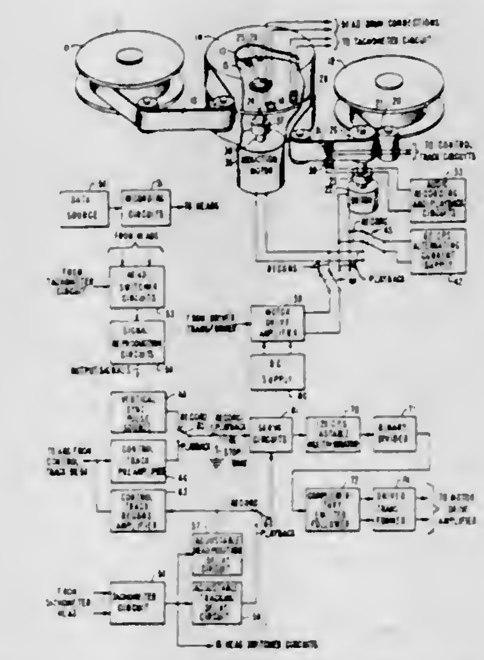

A low cost motor is energized by a servo controlled high efficiency square wave drive system and a mechanical low pass filter element of rubber, or the like, between the motor and the driven member for stable operation of the driven member.

3,399,335
LOAD CURRENT AND POWER DISSIPATION LIMITER FOR A DIRECT COUPLED AMPLIFIER FED MOTOR SYSTEM
Frank Prapis, Paterson, and Charles P. Cacioppo, Paramus, N.J., assignors to The Bendix Corporation, a corporation of Delaware
Filed Nov. 26, 1965, Ser. No. 509,965
6 Claims. (Cl. 318—434)

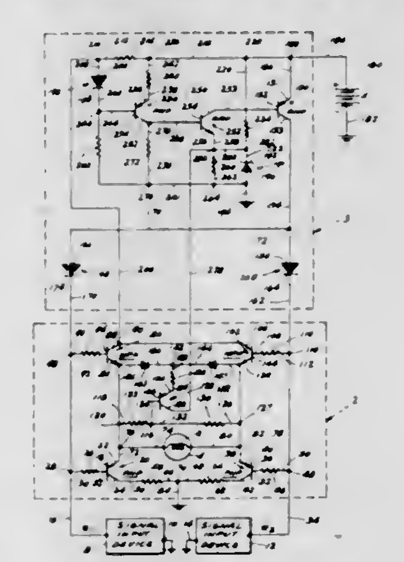

1. In a load current limiter of a type including an electric motor having an energizing winding, an amplifier for supplying load current to the winding and a differential input supply for driving the amplifier, the improvement comprising:

first means for limiting the load current supplied by

the amplifier to the motor winding to a predetermined value;

second means for providing a minimum predetermined load current value;

third means for sensing the load voltage across the motor winding and responsive thereto for providing an output current proportional to the load voltage;

fourth means responsive to the output current for changing the predetermined value of load current supplied by the second means; and

fifth means for providing a maximum predetermined load current value.

3,399,336
INVERTER CIRCUITS WITH CAPACITOR BRIDGE COMMUTATOR CIRCUITS
Floris Koppelmann, Berlin-Siemensstadt, Germany, assignor to Licentia Patent-Verwaltungs-G.m.b.H., Theodor-Stern-Kai, Frankfurt am Main, Germany
Filed Apr. 20, 1965, Ser. No. 449,419
Claims priority, application Germany, Apr. 21, 1964, L 47,652
5 Claims. (Cl. 321—5)

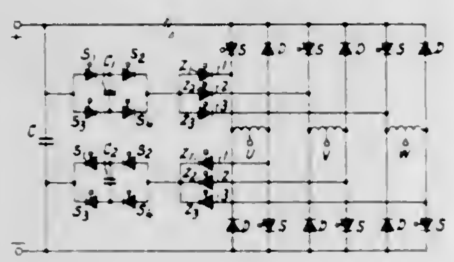

A polyphase inverter connected to a D.C. power source having at least two commutating circuits each comprising four thyristors connected in bridge with a capacitor connected across the diagonal of the bridge. The two commutating circuits are periodically switched to each of the different phases, or they are connected directly across the power controlling elements of each phase, one commutating circuit per element. In another embodiment, the commutating circuits themselves constitute the power controlling elements in each phase of the inverter, one commutating circuit per element.

3,399,337
ELECTRICAL CONTROL CIRCUIT FOR CONVERTING ALTERNATING CURRENT TO ADJUSTABLE MAGNITUDE DIRECT CURRENT
David W. Stone, Franklin, Wis., assignor to Harnischfeger Corporation, Milwaukee, Wis., a corporation of Wisconsin
Filed Nov. 10, 1966, Ser. No. 593,561
57 Claims. (Cl. 321—5)
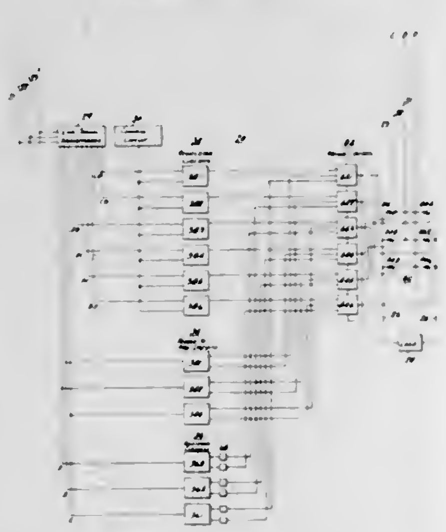
An electrical control circuit for converting poylphase alternating current to adjustable magnitude direct current by controlling a rectifier bridge including a plurality of firing circuits for rendering the controlled rectifiers in the bridge conductive. A plurality of permit to fire circuits are connected to the firing circuits to permit each of the firing circuits to fire the controlled rectifiers after a first point in time in the rectifier conductive interval. Regulator circuits operate the firing circuits to provide firing signals in accordance with a regulating signal. Residual circuits force the firing circuits to fire the controlled rectifiers if the regulator circuits have not previously done so.

3,399,338
LOW VOLTAGE PROTECTION FOR A REGULATED POWER SUPPLY
Albert Burgert, Arcueil, and Guy Arzul, Pleublan, France, assignors to Compagnie Generale d'Electricite, Paris, France
Filed Oct. 22, 1965, Ser. No. 501,705
Claims priority, application France, Feb. 8, 1965, 4,743
10 Claims. (Cl. 323—9)

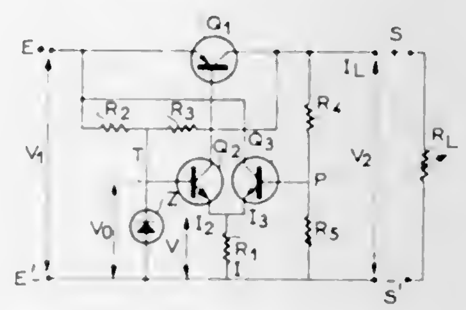

A voltage regulating current limiting circuit including a regulating transistor controlled by a differential amplifier responsive to a reference voltage and the load voltage, and including a passive impedance connecting the output of the regulating transistor with the input of the differential amplifier for regulating the reference voltage for low values of the load voltage to reduce the current through the regulator transistor.

3,399,339
REGULATED SMALL CURRENT SOURCE
John R. Yeager, Cleveland Heights, Ohio, assignor to Keithley Instruments, Inc., Cleveland, Ohio, a corporation of Ohio
Filed Nov. 2, 1964, Ser. No. 407,962
5 Claims. (Cl. 323—22)

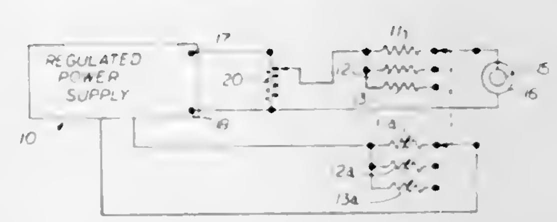

The present small current source includes a regulated power supply having a nominal output voltage, and a plurality of high resistance non-precision output resistors, each having a nominal resistance, arranged to be selectively connected individually in series with the power supply output. The power supply has a differential amplifier and a voltage divider connected across the power supply output and having an intermediate tap whose potential controls the amplifier gain, and thus the output voltage of the power supply. A plurality of compensating resistors, one for each output resistor, are arranged to be selectively connected individually in the voltage divider at one side of the intermediate tap. Each compensating resistor is adjusted to adjust the power supply output voltage so as to compensate for a deviation of the corresponding output resistor from its nominal value, so that the current through the selected output resistor will correspond to its nominal resistance and the nominal voltage of the power supply which is applied to it.

3,399,340
TRANSFORMER FOR HIGH FREQUENCY CURRENTS
Allen F. Podell, Berkeley, Calif., assignor to Anzac Electronics, Inc., Norwalk, Conn., a corporation of Connecticut
Filed June 29, 1964, Ser. No. 378,847
31 Claims. (Cl. 333—33)

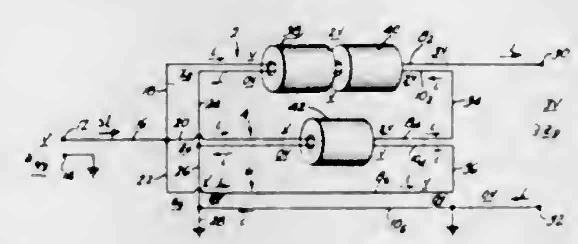

1. A transformer having a transformer ratio of n, where n is an integer greater than one, comprising a pair of input terminals, a pair of output terminals, n networks each comprising first and second electromagnetically linked conductors, the first conductors of each network being connected at one end to one input terminal, the second conductors of each network being connected at said one end to the other input terminal, the first conductor of said first network being connected at its other end to one output terminal, the second conductor of each network and the first conductor of the next network being connected at their other ends to one another, and the second conductor of said last network being connected at each of its ends to a reference potential, said other input terminal and the other output terminal being connected to said reference potential, at least all of said networks other than said last network being electromagnetically associated with a core of high magnetic permeability each of said networks comprising essentially single turn networks.

3,399,341
VACUUM PRESSURE MEASUREMENT APPARATUS UTILIZING HOLLOW CATHODE DISCHARGE
Conrad M. Banas, Manchester, and Thomas L. Churchill, Glastonbury, Conn., and Donald E. Powers, Springfield, Mass., assignors to United Aircraft Corporation, East Hartford, Conn., a corporation of Delaware
Filed May 24, 1965, Ser. No. 458,028
8 Claims. (Cl. 324—33)

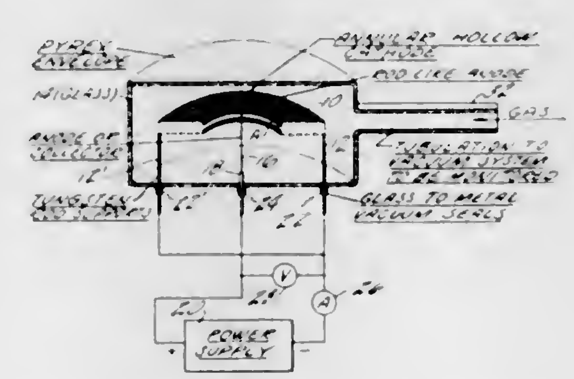

A vacuum gauge to measure low pressures in the 0.5 to 500 micron range in which a hollow cathode discharge device is enclosed in a substantially sealed envelope which is attached to the wall of a vacuum chamber. The hollow cathode device is actuated, and the vacuum pressure is determined as a function of discharge current and discharge voltage.

3,399,342
AUTOMATIC HIGH VOLTAGE INSULATION CABLE TEST SET FOR TESTING MULTIPLE CONDUCTOR METAL SHEATHED ELECTRICAL CABLES
Harry Fligel, St. Laurent, Quebec, Canada, assignor to Northern Electric Company Limited, Montreal, Quebec, Canada
Filed Jan. 19, 1966, Ser. No. 521,568
Claims priority, application Canada, June 29, 1965, 934,597
6 Claims. (Cl. 324—54)

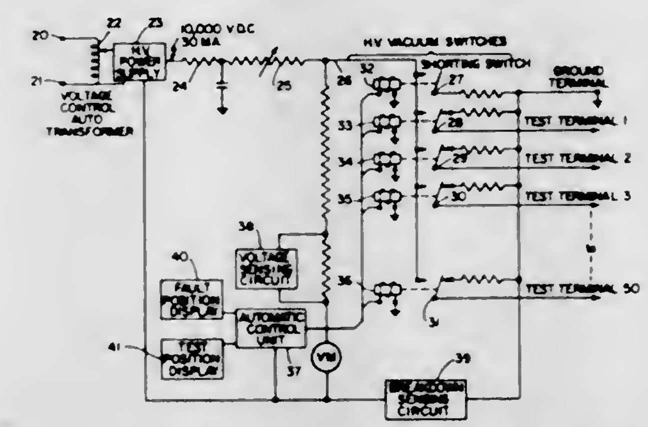

An automatic test set for carrying out high voltage insulation testing on multiple conductor metal sheathed electrical cables is disclosed provided with a variable source of high voltage having a current control network connected with the variable voltage control to limit the maximum current from the high voltage supply to its design maximum. Fault sensing and indicating circuits are included as well as circuits to prevent conductor charging currents from being recorded as "Faults." The tester will automatically test and record "Faults" on all conductors connected to its test terminals without stopping when a fault is located.

3,399,343
AUTOMATIC FILTER SELECTION CIRCUIT FOR A TRANSMISSION MEASURING TEST SET
Gerald D. Haynie, Berkeley Heights, N.J., assignor to Bell Telephone Laboratories, Incorporated, New York, N.Y., a corporation of New York
Filed Dec. 27, 1965, Ser. No. 516,378
6 Claims. (Cl. 324—57)

6. A transmission measuring test set comprising a swept frequency signal source, means for coupling the swept frequency signal to the input of a transmission network under test, means for detecting the swept frequency signal at the output of said transmission network, a bank of successive octave range filters whose total frequency range is at least as great as the swept frequency range, switch means respectively associated with each filter for the purpose of inserting the same into the transmission path between the network under test and the detecting means, means for sampling the instantaneous value of the swept frequency signal, a binary counter, means coupling the swept frequency signal sample to said binary counter for establishing a count therein which corresponds to the instantaneous value of the sampled swept frequency and means for activating said switch means to insert a selected one of the bank of octave range filters into the transmission path in accordance with the highest counter stage activated during a count, the successive activation of higher counter stages serving to insert successively higher octave range filters into the transmission path.

3,399,344
CAPACITOR TEST CELL, INCORPORATED IN A CONVEYOR BED FOR CONVEYING LARGE BULKY HEAVY INDIVIDUAL PIECES FOR THE CAPACITIVE MEASUREMENT OF MOISTURE IN SAID PIECES WHILE SUPPORTED ON SAID BED
Warren E. Benson, Jr., Needham, Mass., assignor, by mesne assignments, to Kingsbury Technology Inc., Norwood, Mass., a corporation of Delaware
Filed Feb. 19, 1965, Ser. No. 434,066
8 Claims. (Cl. 324—61)

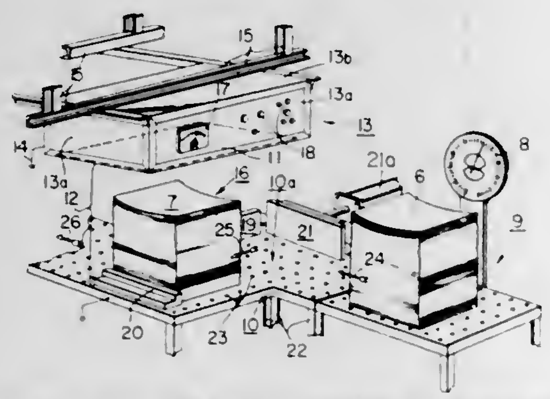

A capacitor test cell for accurately measuring the moisture content of bulky, heavy, individual pieces, such as stacks or bales of wood pulp, to avoid the necessity of measuring small samples of the material in the piece, in which test cell a lower horizontal electrode constitutes part of a horizontal conveyor and weight supporting bed for transporting and supporting the pieces, which bed is grounded, so that a part of the grounded conveyor and supporting surface also functions as the lower grounded electrode of the cell, with the upper horizontal electrode, to which the alternating voltage is applied, being supported above that portion of the conveyor bed constituting the lower electrode so that the sides of the measurement space between the electrodes are unobstructed and so that the conveyor bed extends laterally in two directions beyond the measurement region between the two electrodes, whereby the pieces can be easily, accurately and uniformly moved on the conveyor bed into and out of measuring position within the measurement region between the electrodes by sliding them along the conveyor bed. The portions of the two electrodes which lie opposite to each other are of a size greater than the maximum horizontal dimension of the pieces and the conveyor bed is provided with an index member and guide of insulating material for the pieces to insure that each piece will be uniformly moved on the conveyor into proper position for measurement between the two electrodes. In essence the test cell is built into a conveyor bed for the pieces. Preferably, the upper electrode is surrounded by a conductive, grounded shield except for the lower surface thereof facing the conveyor bed.

3,399,345
PRECISION RADIO FREQUENCY ENERGY PHASE MEASURING SYSTEM
Seymour B. Cohn, Tarzana, Calif., assignor to Emerson Electric Company, St. Louis, Mo.
Continuation-in-part of application Ser. No. 273,609, Apr. 17, 1963. This application June 3, 1966, Ser. No. 555,024
3 Claims. (Cl. 324—84)

Disclosed is a system for accomplishing a measurement of deviations from phase linearity of microwave components wherein there is developed a reference signal and a test signal from a source of radio frequency energy which is split and applied simultaneously to two branches of the system, one of the branches passing through the components under test. The reference and test signals are brought together in a phase discriminator circuit wherein the energy from each of the two signals is split and recombined and thereafter applied to a pair of detectors in such a manner as to generate output signals which are propor-

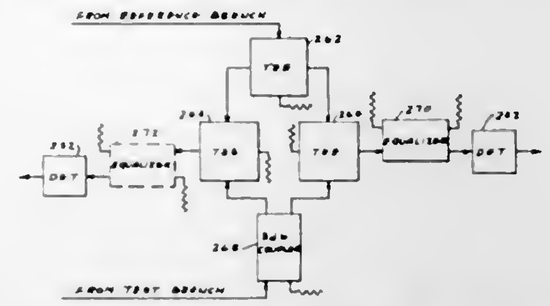

tional to sine θ and cosine θ which are then applied to means for displaying the ratio of the two signals.

3,399,346
PHASE-SENSITIVE DETECTOR APPARATUS USING SETS OF CONSTANT POWER VARIABLE AVERAGE AMPLITUDE PULSES
Neal P. Milligan, Dublin, Ohio
(4230 Darbyshire Court, Columbus, Ohio 43221)
Continuation of application Ser. No. 417,076, Dec. 9, 1964. This application Apr. 20, 1967, Ser. No. 632,454
10 Claims. (Cl. 324—87)

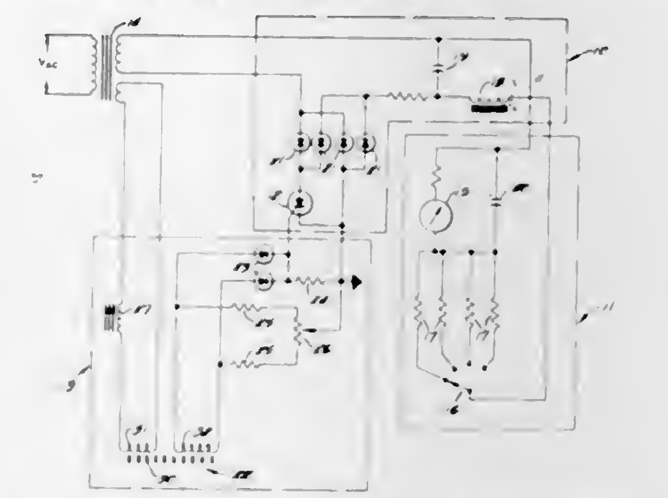

1. A phase-sensitive detector apparatus comprising
(A) an electric circuit connected to receive power from an alternating-current electrical power source of symmetrical, sinusoidal waveform and specific frequency, said electric circuit including
 (1) an output connection and
 (2) normally nonconductive switch means connected therein for controlling current flow in said electric circuit to said output connection, said switch means being switchable to a conductive state during each half-cycle of the power source voltage in response to a control signal applied to said switch means and returning to a nonconductive state at the termination of each half-cycle;
(B) control means for forming and applying said control signal to said switch means, said control means connected to said power source and including
 (1) input signal means responsive to an input condition and forming an input signal having either a positive or a negative characteristic, and
 (2) control-signal-forming means normally forming said control signal at a same predetermined time during each half-cycle of said power source voltage resulting in said switch means being conductive for equal time intervals during each half-cycle to produce a symmetrical-waveform current flow in said electric circuit, said control-signal-forming means responsive to said input signal and being biased thereby to effect phase-displacement of the time of application of said control signal during each half-cycle with the phase-displacement in adjacent half-cycles being of opposite sign as determined by the characteristics of said input signal and to switch said switch means to a conductive state at relatively phase-displaced times resulting in unequal conduction time-intervals during such adjacent half-cycles and a non-symmetrical-waveform current flow in the electric circuit which current flow includes a direct current component related to the input signal, and
(C) current detector means connected with said electric circuit at said output connection and being responsive only to the direct current component whereby said current detector means senses a phase-displacement produced by said input signal means.

3,399,347
PHOTOELECTRIC SYSTEM FOR GENERATING A SIGNAL PROPORTIONAL TO THE MOVEMENT OF A METER
Alexander E. Martens, Greece, N.Y., assignor to Bausch & Lomb Incorporated, Rochester, N.Y., a corporation of New York
Filed Jan. 9, 1964, Ser. No. 336,764
4 Claims. (Cl. 324—96)

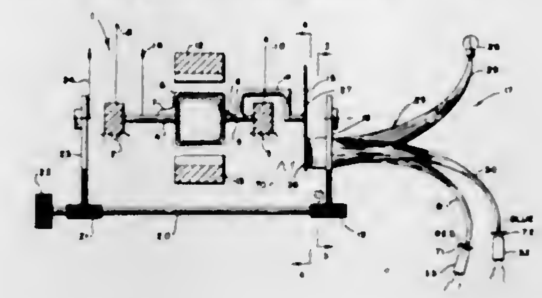

A disk including two portions therein, such as wedges, having different optical properties than the remainder of the disk, is coupled to rotate with a meter movement. Radiation from a source is transmitted to the disk. Radiation from the disk is directed towards a pair of photodetectors that generate a signal proportional to the position of the meter.

3,399,348
R.M.S. METERING SYSTEM
Julius Praglin, Beachwood, Ronald F. Shuster, Mentor, and Thomas J. Noveske, Seven Hills, Ohio, assignors to Keithley Instruments, Inc., Cleveland, Ohio, a corporation of Ohio
Filed Apr. 8, 1964, Ser. No. 358,348
3 Claims. (Cl. 324—96)

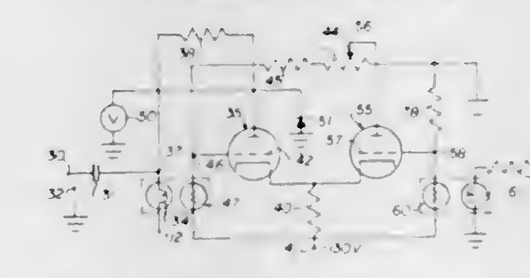

The present R.M.S. metering system comprises a first filament connected to a D.C. power supply and adapted to be connected to the A.C. signal source which is to be measured. The light radiated by this filament energizes a first photoresistor connected to a first amplifier which maintains constant the total current through the first filament. A meter is coupled to this amplifier to indicate the R.M.S. value of the A.C. input signal to the first filament. The first amplifier is connected in a differential amplier circuit which has a similar combination of a second amplifier, photoresistor, and a filament energized by the same D.C. source. The second amplifier compensates for variations in the D.C. power supply or the ambient temperature so that these do not affect the operation of the first amplifier.

3,399,349
AUTOMATIC RANGING ELECTRONIC VOLTMETER
Ralph E. Davis, Rte. 1, Cohutta, Ga. 30710
Filed July 8, 1965, Ser. No. 470,533
12 Claims. (Cl. 324—115)

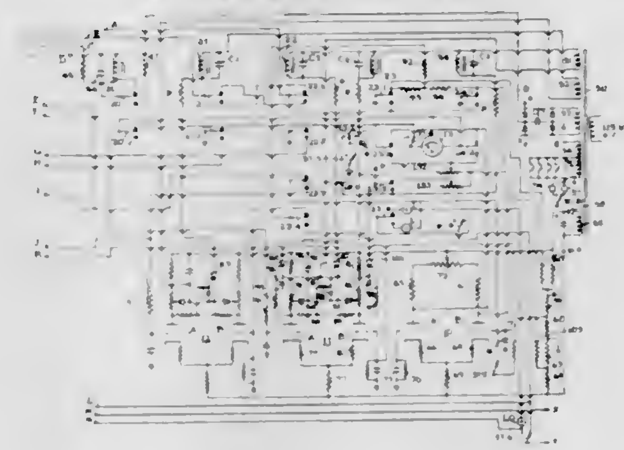

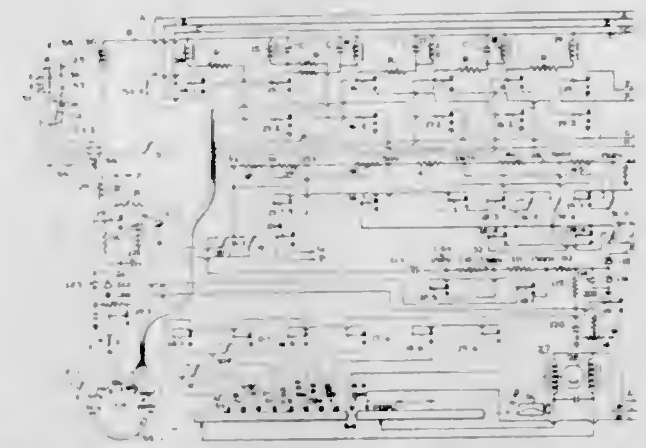

The present invention relates generally to electrical sensing circuits, and more particularly to electrical circuits for sensing electrical values and providing an output driving signal indicative of the magnitude and polarity of the sensed value for driving associated output devices.

Application of a potential across a voltage attenuator initiates an automatic switching sequence, the end result of which is the selection of a tap on the attenuator which yields a potential compatible with the basic sensitivity of a meter movement connected to the taps through the switching circuits. A plurality of active bridge circuits are provided which, in addition to driving the meter movement, are connected to effect automatic phasing of the meter movement with the polarity of a DC potential across the attenuator. The automatic switching sequence takes place in both directions, that is, downward as well as upward, so that the potential across the attenuator is monitored with respect to both amplitude changes and/or polarity reversal.

Automatic ranging includes measurement of both DC and AC potential by means of a manual switch which inserts into the circuit an AC attenuator, a peak-to-peak rectifier, a filter capacitor and a voltage dropping resistor between the input terminals of the DC circuitry and the DC attenuator thereof such that the DC input terminals thereby serve as AC input terminals for the meter.

3,399,350
SELF-TIMING DECODER FOR PULSE CODE WHEREIN CODE STRUCTURE IS SUBJECT TO RESTRAINTS
William E. De Lisle, Buffalo, N.Y., assignor to Sylvania Electric Products Inc., a corporation of Delaware
Filed May 18, 1964, Ser. No. 367,946
5 Claims. (Cl. 325—38)

A pulse code communication system including a transmitter for generating any one of a plurality of binary code words having specific structural restraints and a de-

coder adapted to be controlled in timing in response to the structure of received code words, to produce a unique output for each code upon reception of a single copy of the code, and to provide low power consumption during standby. The decoder comprises a magnetic core shift register, two differentiator-squaring amplifier time control circuits, a monostable responsive to each input pulse to control the driving and ONE loading of the shift reg-

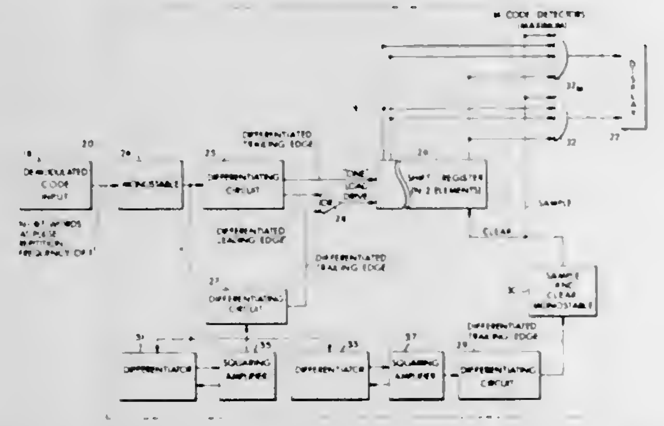

ister and to charge capacitors in the time control circuits, another monostable for controlling reset and readout of the shift register in response to an output signal from one of the time control circuits, the other time control circuit being used to effectively load ZEROS into the register, and a plurality of AND gate code detectors connected to the output terminals of the shift register. The monostables and time control circuits employ complementary transistors which are all in the "cut-off" state during standby.

3,399,351
SEQUENCE DETECTION CIRCUIT
Alfons Reszka, Northbrook, Ill., assignor to Teletype Corporation, Skokie, Ill., a corporation of Delaware
Filed Apr. 7, 1966, Ser. No. 540,921
9 Claims. (Cl. 328—119)

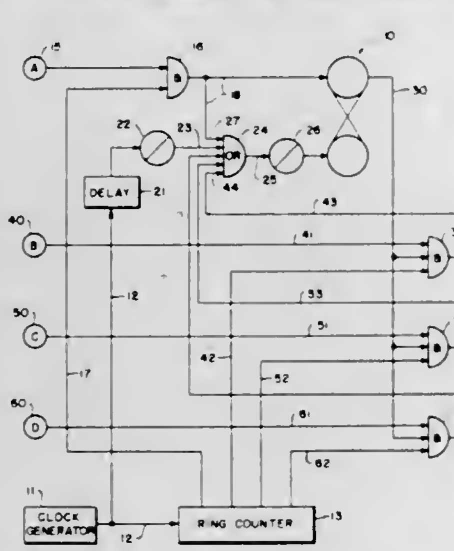

A circuit for detecting a plurality of signals occurring in a predetermined sequence using a single bistable memory element set to one of its two states upon receipt of the first signal in the sequence. During each time interval in which succeeding signals of the sequence should occur, a reset pulse is supplied for resetting the memory element to its other state; but the reset pulses are inhibited by receipt of the expected signals in the proper sequence.

3,399,352
PHASE DETECTOR OUTPUT SMOOTHING NETWORK
Edward K. Dalton, Riverside, Calif., assignor to Astrodata, Inc., Anaheim, Calif., a corporation of California
Filed Mar. 19, 1965, Ser. No. 441,183
9 Claims. (Cl. 329—122)

The disclosed invention concerns a smoothing network in a phase locked loop FM discriminator, for smoothing the discriminator output voltage, the network including

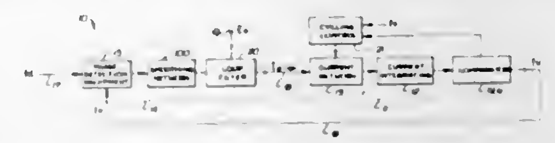

integrators operating in a predetermined sequence to integrate control current from a phase detection source.

3,399,353
FM COUNTER-TYPE DETECTOR ESPECIALLY SUITED FOR INTEGRATED CIRCUIT FABRICATION
Jack Avins, Princeton, N.J., assignor to Radio Corporation of America, a corporation of Delaware
Continuation-in-part of application Ser. No. 370,232, May 26, 1964. This application June 2, 1967, Ser. No. 643,194
26 Claims. (Cl. 329—126)

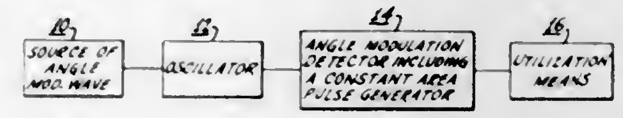

A high performance frequency modulation detector system especially suited for fabrication using integrated circuit techniques includes an oscillator circuit having a free running frequency harmonically related to the center frequency of the input frequency modulated waves and a counter-type detector coupled thereto which generates constant area pulses at a repetition rate related to the frequency of the oscillator waves.

3,399,354
TRANSFORMERLESS PUSH-PULL TRANSISTOR AMPLIFIER WITH FEEDBACK
Wolfgang E. Sodtke, Berlin, Germany, assignor to Loewe Opta G.m.b.H., Berlin, Germany
Filed May 14, 1965, Ser. No. 456,007
Claims priority, application Germany, July 11, 1964, L 48,253
5 Claims. (Cl. 330—13)

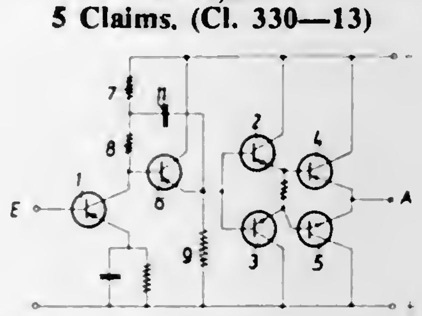

In a push-pull transistor amplifier arrangement without transformer coupling consisting of a plurality of transistor stages connected in cascade, a feedback circuit is used in the transistor amplifier stage subsequent to the first transistor stage operating as driver transistor thus enabling the latter transistor to operate with a high interior resistance which is necessary to assure a nearly linear modulation. As feedback stage there may be used a separate transistor or one transistor of the phase-inverter stage subsequent to said driver transistor stage.

3,399,355
TRANSISTOR AMPLIFIER WITH CLASS AB BIASING CIRCUIT
Cyrus F. Ault, Lincroft, N.J., assignor to Bell Telephone Laboratories, Incorporated, New York, N.Y., a corporation of New York
Filed Dec. 2, 1965, Ser. No. 511,183
4 Claims. (Cl. 330—15)

A separate biasing circuit for each transistor of a push-pull amplifier includes an emitter-degenerative feedback

resistor. A voltage divider comprising a resistor in series with the parallel combination of a normally forward biased diode and a capacitor is supplied from the DC source. The input signal is inserted between the voltage divider junction and the transistor base to provide positive bias at zero signal for linear class AB operation. A second

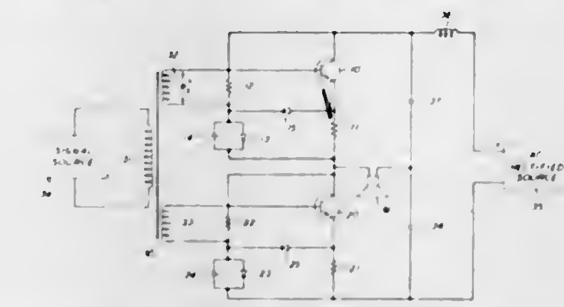

diode connected between the emitter and the voltage divider junction provides, together with the first diode, a high signal bypass of the emitter resistor for improved efficiency.

3,399,356
INTERSTAGE ATTENUATOR COUPLING NETWORK FOR TUNED EMITTER AMPLIFIERS
Eric Davies, Danbury, England, assignor to The Marconi Company Limited, London, England, a British company
Filed Jan. 17, 1966, Ser. No. 520,932
Claims priority, application Great Britain, Feb. 8, 1965, 5,463/65
4 Claims. (Cl. 330—21)

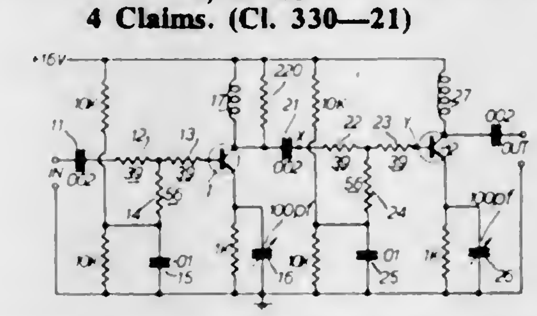

1. A transistor amplifier comprising at least two cascaded tuned emitter stages with an attenuator in the coupling circuit between the collector of the transistor of the first of said stages and the base of the transistor of the second of said stages, said attenuator being such that, at the frequency of resonance, the amplitude at the base end of the attenuator is substantially equal to or less than the amplitude at the collector end.

3,399,357
WIDEBAND TRANSISTOR AMPLIFIER WITH OUTPUT STAGE IN THE FEEDBACK LOOP
Ira Marvin Wellerstein, Philadelphia, Pa., assignor to Sperry Rand Corporation, New York, N.Y., a corporation of Delaware
Filed Aug. 26, 1965, Ser. No. 482,784
2 Claims. (Cl. 330—22)

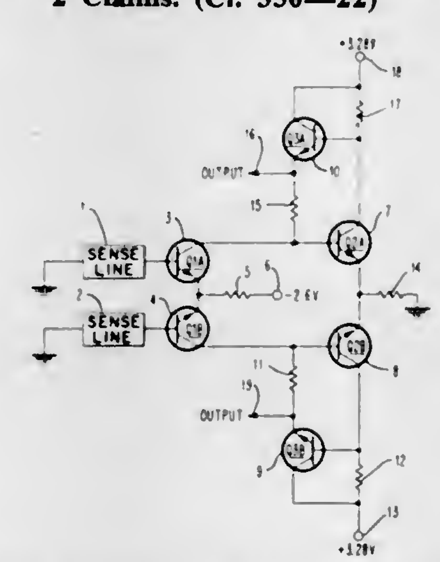

This invention relates to a wideband differential amplifier whose output stage is in the feedback loop. The circuit comprises three pairs of transistors which provide voltage and power amplification of the differential input signal, $V_A - V_B$ and rejection of the common mode input signal,

$$\frac{V_A + V_B}{2}$$

The first and second amplifier stages Q1 and Q2 provide voltage gain and common mode rejection. The third or output stage Q3 gives power gain and provides a low impedance output since it is connected as an emitter follower. The low output impedance is desirable in a wideband amplifier to avoid deterioration of the output signal bandwidth due to load or wiring capacitance.

3,399,358
AMPLIFIER DISTORTION CONTROL BY SWITCHING
James D. Rinehart, Bethesda, Md., assignor to Bell Telephone Laboratories, Incorporated, New York, N.Y., a corporation of New York
Filed Jan. 21, 1965, Ser. No. 427,057
4 Claims. (Cl. 330—149)

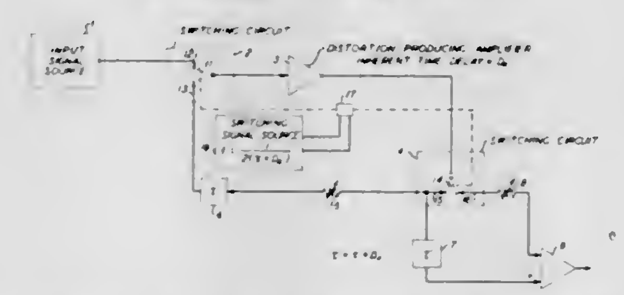

The nonlinear distortion reducing system disclosed employs time division switching to reapply a distorted signal to the input of a distorting amplifier and then to combine a portion of the once-distorted signal and the redistorted signal in a sense to eliminate first order distortion.

Various techniques are also disclosed for reducing the sampling distortion that may otherwise accompany this technique.

3,399,359
SOLID-STATE LASER
Lawrence H. Ott, Altadena, and Robert S. Congleton, Canoga Park, Calif., assignors to Hughes Aircraft Company, Culver City, Calif., a corporation of Delaware
Filed Mar. 1, 1965, Ser. No. 436,221
18 Claims. (Cl. 331—94.5)

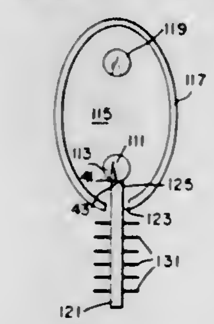

1. A solid-state laser, comprising: a cylindrical active laser rod having a longitudinal axis; a pair of reflecting elements disposed about said laser rod to reflect laser energy therethrough essentially parallel to said axis, at least one of said reflecting elements being partially transmissive of said laser energy: pump energy means including a pump lamp for producing light frequency pump energy; pump cavity means including a pump cavity structure having a pumping cavity enclosing said lamp and said laser rod for directing a portion of said pump energy at said laser rod; thermally conductive means coupled to a longitudinal portion of the surface of said laser rod for providing a bidirectional thermally conduc-

tive path for said laser rod; and a thin layer of a stable bright metal disposed between and wetting said laser rod and said conductive means, said metal having a high coefficient of thermal conductivity, a low vapor pressure and remains in a liquid state at the operating temperatures of said laser rod.

3,399,360
LOW FREQUENCY DRIFT FIELD OSCILLATOR
Francis Rachal and James R. Cricchi, Baltimore, Md., assignors, by mesne assignments, to the United States of America as represented by the Secretary of the Air Force
Filed Sept. 26, 1967, Ser. No. 670,819
3 Claims. (Cl. 331—108)

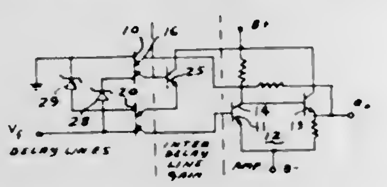

An inverting transistor amplifier has an emitter follower connected in the collector output circuit thereof. A feedback loop is provided between the output of the emitter follower and the input of the inverting amplifier. A plurality of cascaded delay lines are connected in the feedback loop. Interstage gain is provided between the delay lines which have their voltage control circuits connected in parallel across the control voltage source.

3,399,361
VARIABLE DELAY LINE
Henry S. Belson, North Hills, Pa., assignor to Sperry Rand Corporation, New York, N.Y., a corporation of Delaware
Filed July 24, 1963, Ser. No. 297,320
2 Claims. (Cl. 333—31)

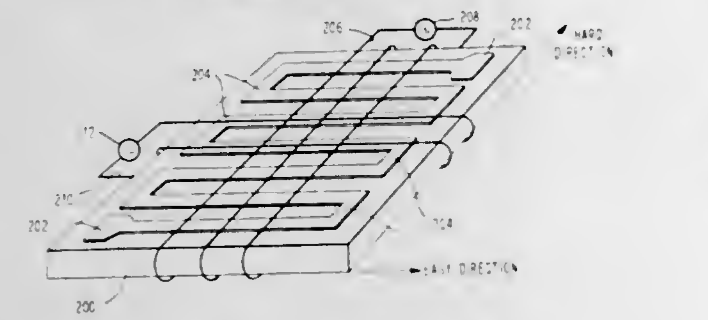

1. A variable delay line comprising,
(a) a first conductor having a length and width dimension;
(b) a second conductor having a length and width dimension and oriented with respect to said first conductor to provide a transmission effect, said conductors being oriented in a zig-zag configuration so that sections thereof are arranged in parallel fashion with other sections wherein a majority of said parallel sections are of longer length than the remaining sections;
(c) a spacer positioned between said conductors, said spacer further including a thin magnetic film having the approximate proportions of 80% Fe and 20% Ni, said film further being characterized by the property of uniaxial anisotropy whereby an EASY axis is induced in said film, said EASY axis being oriented along said length dimension of said longer parallel sections;
(d) input means adapted to supply current to said conductors such that a magnetic field links said film in the HARD axis;
(e) output means adapted to provide outputs subsequent to the application of inputs at said input means;
(f) first external means juxtaposed to said longer parallel sections for generating a magnetic field in the direction of said EASY axis of said longer parallel section;
(g) second external means juxtaposed to said longer parallel sections for generating a magnetic field in the direction of said HARD axis of said longer parallel section, said first and second external means being applied singly or together to form a variable delay line by varying the permeability of said film from approximately 1 to approximately 10,000.

3,399,362
TUNER HAVING UHF-VHF CHANGEOVER SWITCH
John Y. Ma, McHenry County, and Robert C. Baenziger and Christopher C. Hsiao, Carpentersville, Ill., assignors to Electro-Netic Steel, Inc., Schiller Park, Ill., a corporation of Illinois
Filed Apr. 1, 1965, Ser. No. 444,717
20 Claims. (Cl. 334—51)

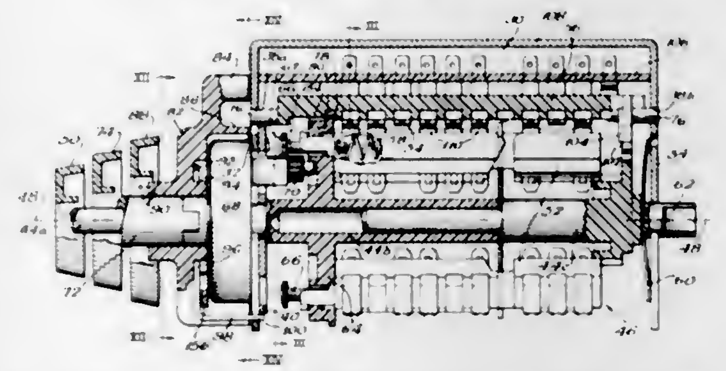

Three section tuner adapted for UHF-VHF changeover, having plural aligned contact carried by a stationary UHF section, pluralities of selectable aligned contacts carried by a rotatable VHF turret section, and plural aligned contacts carried by an intermediate switch bar section, the bar being switchable selectively to electrically connect to the UHF or VHF section.

3,399,363
PROBE AND MARKER HEAD
Mordechai Wiesler, Lexington, Mass., assignor, by mesne assignments, to Teledyne, Inc., Hawthorne, Calif., a corporation of Delaware
Filed May 2, 1966, Ser. No. 546,919
7 Claims. (Cl. 335—270)

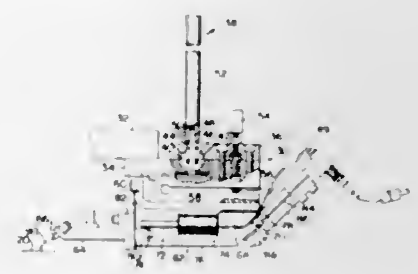

1. An automatic head for probing, marking and the like comprising
(a) a support,
(b) a coil fixed to said support,
(c) a pair of flat springs mounted to said support one at either end of said coil,
(d) one of said springs being disposed perpendicular to the axis of said coil and the other being disposed at an acute angle relative thereto,
(e) an armature supported at spaced points by said springs in spaced relation to said coil,
(f) a tip means mounted to said armature and extending beyond said perpendicular spring whereby said tip means will traverse an arc upon said armature being displaced by energization of said coil.

3,399,364
ELECTRICAL COIL WITH A TAP CHANGING MEANS
Alfred W. Barber, Bayside, N.Y., assignor to Forbro Design Corp., New York, N.Y., a corporation of New York
Filed Mar. 30, 1967, Ser. No. 627,212
7 Claims. (Cl. 336—107)

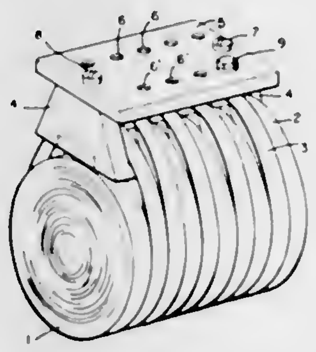

A multi-layered electrical coil has a comb of insulating material that supports and positions the top layer of the coil. A bridge member is supported on the top of the comb above the coil. There are a plurality of holes in the bridge member through which tap screws can be placed.

3,399,365
WOUND MAGNETIC CORE HAVING STAGGERED STRIPS
Subovici Vadim, Blvd. Republicii 58, Bucharest, Rumania
Filed Oct. 20, 1965, Ser. No. 498,816
Claims priority, application Rumania, Nov. 24, 1964, 48,821
3 Claims. (Cl. 336—213)

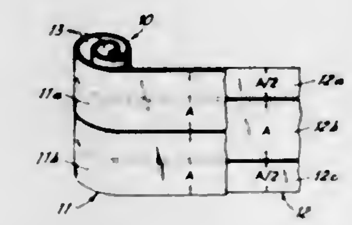

A coiled magnetic core is spirally wound from magnetic sheet material arranged in two juxtaposed coextensive layers each composed of a plurality of parallel strips with adjoining longitudinal edges, the widths of the individual strips differing in the two layers so that the gaps formed by their adjoining edges are staggered in axial direction. There is also disclosed a method of coiling a magnetic core by cutting a strip of grain-oriented magnetic sheet material into successive sections of equal length and successively bending them about a mandrel, with their longitudinal dimension parallel to the mandrel axis; the sheets may be soldered or welded to one another and may be annealed after coiling.

3,399,366
THERMORESPONSIVE SNAP ACTION SWITCH
John W. Huffman, Mansfield, Ohio, assignor, by mesne assignments, to Emerson Electric Co., St. Louis, Mo., a corporation of Missouri
Filed May 9, 1966, Ser. No. 548,476
8 Claims. (Cl. 337—365)

A thermoresponsive snap action switch mechanism having a frame with parallel metal support member maintained in spaced relation by an insulating mounting plate. The switch mechanism further embodies a movable switch member having a contact cooperating with a second contact, and a bimetal element having a planar portion and an arcuate portion, the latter portion being articulately connected with the movable switch member to ob-

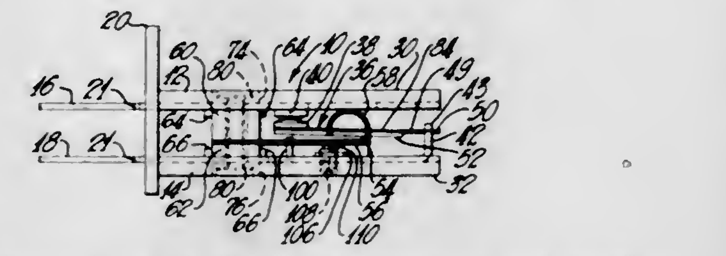

tain snap action of the switch member under the influence of temperature variations on the bimetal element.

3,399,367
MINIATURIZED POTENTIOMETER WITH RESISTOR ELEMENT, WIPER AND SUPPORT THEREFOR CONCENTRICALLY MOUNTED AND ELECTRICALLY CONNECTED
Edward H. Tumbusch, Sepulveda, Calif., assignor to Techno-Components, Inc., Van Nuys, Calif., a corporation of California
Filed July 5, 1966, Ser. No. 562,812
10 Claims. (Cl. 338—175)

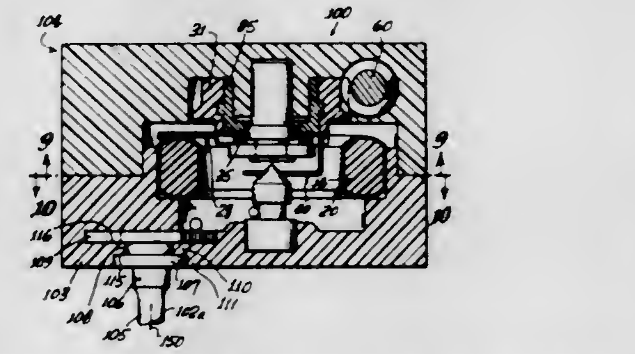

This invention relates to a potentiometer and more particularly to a miniaturized potentiometer. The potentiometer disclosed is of a type having resistance wound about a donut shaped member of a selected cross-section with the wiper member mounted on an axis substantially concentric therewith. The parts in the potentiometer are arranged to provide a particularly compact and miniaturized potentiometer with high reliability, rugged construction for resisting vibration, moisture proof and readily adjustable positioning of the output leads.

3,399,368
HIGH RESOLUTION POTENTIOMETER
William I. Elliott, 5172 Dumont Place, Woodland Hills, Calif. 91364, and Jack L. Randall, 27 Malibu Colony, Malibu, Calif. 90265
Filed Jan. 24, 1966, Ser. No. 522,736
5 Claims. (Cl. 338—177)

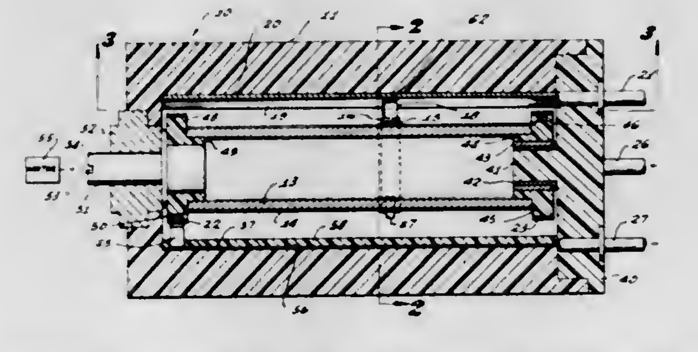

Variable resistance apparatus including a mandrel having a dense helical resistance winding of closely spaced turns of wire, typically 2500 turns per inch, with a grooved plastic tracking nut in meshed engagement with the helical winding and having a conductive contact element in contact with the winding to provide high resolution resistance adjustment.

3,399,369
POTENTIOMETER HAVING HOUSING FORMED OF ELECTRICALLY NON-CONDUCTIVE MATERIAL INCLUDING INTEGRAL HINGE SECTION AND METHOD OF MAKING THE SAME
George Soulakis, Pasadena, Calif., assignor to Spectrol Electronics Corporation, City of Industry, Calif., a corporation of Delaware
Filed Aug. 17, 1966, Ser. No. 572,995
6 Claims. (Cl. 338—180)

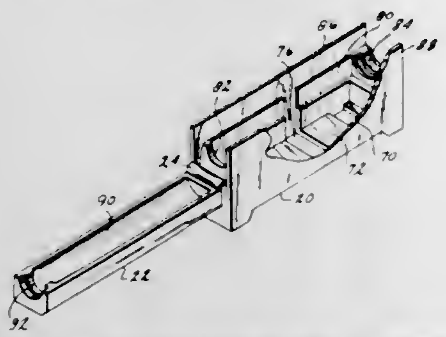

Disclosed is a potentiometer having a resistance element, electrical contact, and lead screw for moving the contact along the resistance element all disposed within the cavity formed by an integral housing including a base member having side and end walls with a top hinged to one of the walls, the hinged top being held in place by heat forming opposed walls of the base.

3,399,370
SHAFT SEAL
John C. Mack, Westtown, Pa., assignor to The Boeing Company, Seattle, Wash., a corporation of Delaware
Filed Dec. 30, 1966, Ser. No. 606,307
10 Claims. (Cl. 339—8)

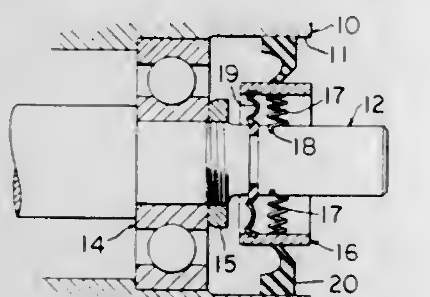

A fluid seal for a rotating shaft wherein the natural frequency of the seal is below the vibratory frequency generated by shaft eccentricities and the seal is mounted about the shaft in a manner such that it is not subject to the dynamic eccentricities of the rotating shaft.

3,399,371
CONNECTOR FOR THIN FILM CIRCUITS
Frederick T. Inacker, Philadelphia, Pa., assignor to Elco Corporation, Willow Grove, Pa., a corporation of Delaware
Filed Apr. 15, 1966, Ser. No. 542,823
6 Claims. (Cl. 339—17)

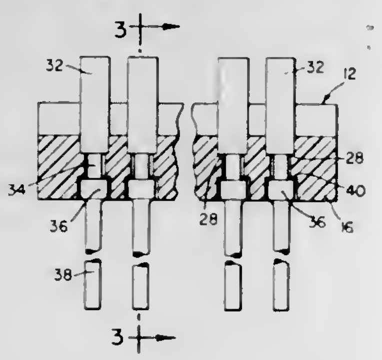

This invention relates to a connector for thin film circuits, and more particularly, a device which supplies terminating means for thin film substrates, while at the same time supplying mechanical support for the substrate in the area of termination.

3,399,372
HIGH DENSITY CONNECTOR PACKAGE
Edward C. Uberbacher, Poughkeepsie, N.Y., assignor to International Business Machines Corporation, Armonk, N.Y., a corporation of New York
Filed Apr. 15, 1966, Ser. No. 566,697
5 Claims. (Cl. 339—17)

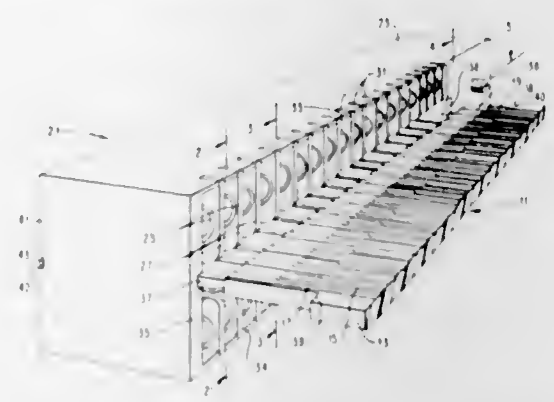

A plurality of sheet metal ground contacts are formed in a general U-shape with these contacts having top and bottom contact buttons facing into the opening of the U-shape for top and bottom ground tabs of the printed circuit board wherein these contacts are slotted to provide spring action when mounted by projections in a box-like housing.

3,399,373
ELECTRICAL CONNECTOR
William M. Maki and Ronald B. Sherbino, Niles, Mich., assignors, by mesne assignments, to Electro-Voice, Incorporated, Buchanan, Mich., a corporation of Delaware
Filed May 17, 1965, Ser. No. 456,428
16 Claims. (Cl. 339—62)

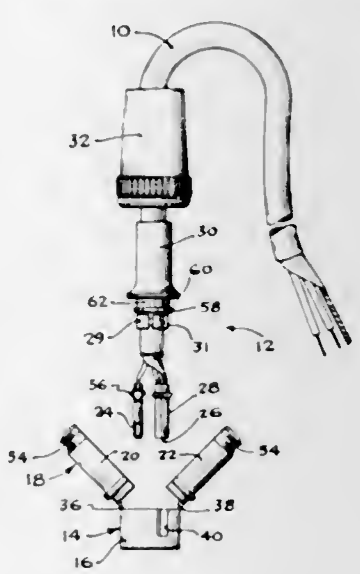

This disclosure relates to an electrical cable connector for use on a microphone cable. The connector has an insulating member with a flat portion provided with a plurality of openings for receiving contact elements. The insulating member also has two parts hinged on opposite sides of the flat portion which are adapted to pivot into abutment with each other. A cable extends between and is clamped by the two movable parts, and the wires of the cable are electrically connected to the contact elements. The contact elements are slidable in the openings and are retained in position by means of beads protruding therefrom which are clamped between the flat portion and the two hinged portions of the electrically insulating member.

3,399,374
DISENGAGEABLE ELECTRICAL CONNECTIONS
William Vito Pauza and John Philip Kunkle, Harrisburg, Pa., assignors to AMP Incorporated, Harrisburg, Pa.
Filed July 14, 1966, Ser. No. 565,155
5 Claims. (Cl. 339—91)

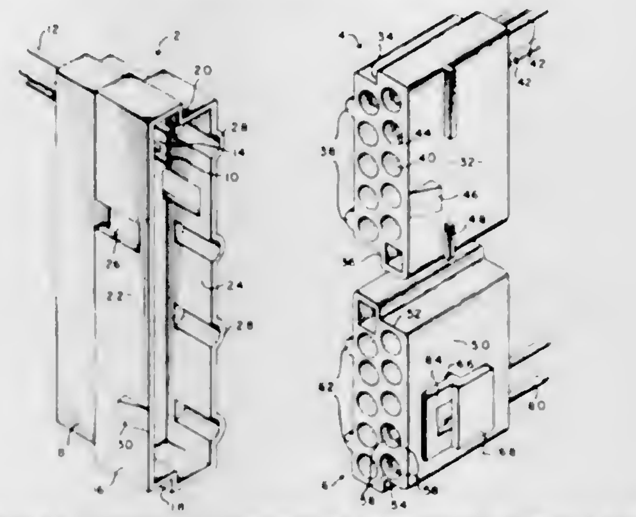

Electrical connector comprises receptacle having hood portion and two plugs which are insertable into the hood in side-by-side relationship. Polarizing means effective between the receptacle and the plugs assure insertion of the plugs in predetermined positions. Disengageable locking means are provided on a first one of the plugs and the hood for securing the first plug semipermanently to the receptacle. Disengageable latching means are provided on the second plug and the hood for latching the second plug to the receptacle in a manner such that it can be easily removed. In use, power is transmitted through the connector by means of contacts in the second plug and the receptacle so that during servicing, second plug will logically be disengaged by the technician thereby to de-energize the equipment on which the connector is mounted.

3,399,375
ELECTRICAL CONNECTOR
Vernon E. Peek, Birmingham, Ala., assignor to Anderson Electric Corporation, Leeds, Ala., a corporation of Alabama
Filed July 11, 1967, Ser. No. 652,527
10 Claims. (Cl. 339—104)

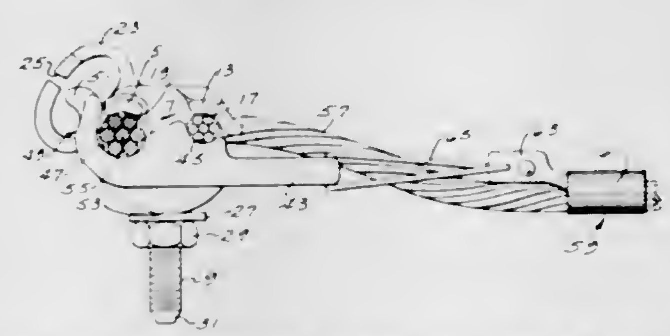

An electrical connector is described for use in an electrical distribution system as a dead-ending aid for neutral service drops. The connector includes a pair of jaws pivotally interconnected for swinging movement about an axis transverse to the jaws, and a pair of spaced main and tap conductor grooves extending parallel to the axis in each of the jaws. One of the jaws has an opening and the other an integral bolt adapted to pass through the opening on swinging movement of that jaw for inserting and clamping the conductors in the grooves between the jaws. The pivotal interconnection includes a slot for assembly of the jaws.

3,399,376
PHOTOGRAPHIC APPARATUS
Venerio J. Rigolini, Brooklyn, N.Y., assignor to Whitehouse Products, Inc., Brooklyn, N.Y., a corporation of New York
Filed Aug. 19, 1966, Ser. No. 573,542
6 Claims. (Cl. 339—147)

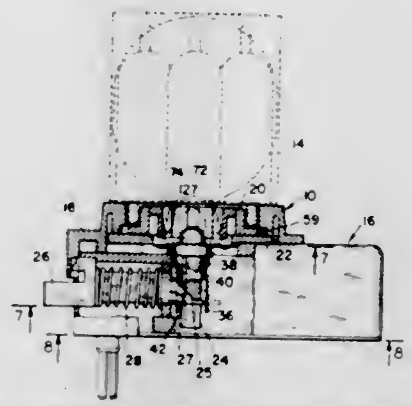

A flashcube mounting base including an all plastic flashcube socket for use on a photographic camera having a flash device. The base to which the flashcube is mounted connects the latter to the flash circuitry of the camera and permits manual rotation of the flashcube.

3,399,377
ELECTRICAL CONNECTOR WITH CONTACT RECEIVING CHANNELS
Herbert B. Warzecka, New Brighton, Minn., assignor to G. T. Schjeldahl Company, Northfield, Minn., a corporation of Minnesota
Filed Dec. 5, 1966, Ser. No. 599,228
10 Claims. (Cl. 339—176)

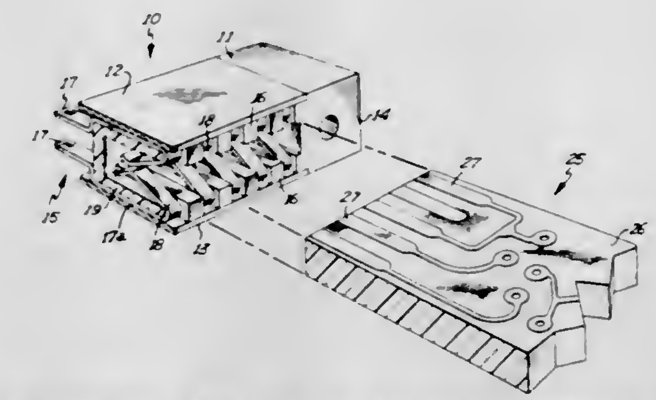

This invention relates to an electrical connector for printed circuit cards. It consists of a receptacle having an elongated slot therein bordered by a series of channels having inner and outer walls and containing beryllium copper contacts. The contacts lay flush against the outer walls of the channels and fold over so as to locate free ends within the slot.

3,399,378
SYSTEM FOR SIGNALLING BETWEEN EARTHMOVING VEHICLES
John W. Carter, Peoria, Ernest W. Landen, East Peoria, and Robert G. Miller, Princeville, Ill., and Charles E. Anderson, deceased, late of Marquette Heights, Ill., by Robert C. Strodel, administrator, Peoria, Ill., assignors to Caterpillar Tractor Co., Peoria, Ill., a corporation of California
Filed Mar. 31, 1965, Ser. No. 444,462
4 Claims. (Cl. 340—34)

A manually operable light transmitting device, including a flash tube which is operative to emit an abrupt flash of light characterized by an initial high level of intense illumination, is positioned on a pusher vehicle, and a receiving device, including a solar cell, the internal resistance of which varies inversely with the level of illumination received by it, disposed to receive any and all radia-

tions including the above-described flash of lights, when emitted, and is positioned on the pushed vehicle. The receiving device also includes a differentiating circuit, the magnitude of the output from which varies directly with the rate of change of light received by the solar cell, and further includes an amplifier which is so biased that it

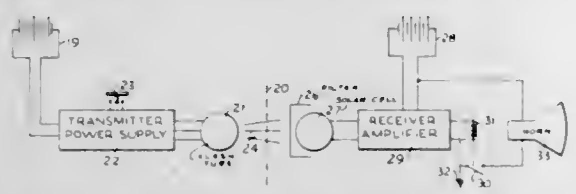

will produce a load signal only when it receives from the differentiating circuit a signal having a magnitude which is the result of the solar cell's having received the above-described flash of light. Receipt by the horn of the load signal actuates the horn and alerts the operator of the pushed vehicle.

3,399,379
HIGHWAY INTERSECTION SYSTEM
Joseph D. H. Donnay, 7200 Charles St., Lutherville, Md. 21093
Filed Sept. 17, 1964, Ser. No. 397,175
2 Claims. (Cl. 340—40)

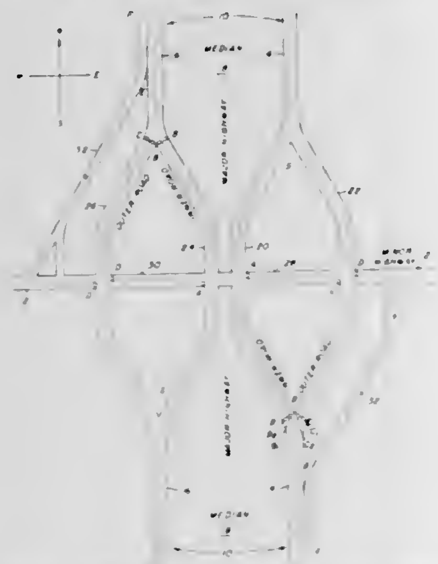

1. A highway intersection system comprising a major road consisting of a pair of lane means divided by a median strip, with one of said lane means being for traffic in one direction and the other of said lane means being for traffic in the opposite direction, each of said lane means having a divided section to form an inner road and an outer road, a minor road extending transversely across the divided section of each said lane means of said major road, first means for directing traffic to pass alternately and simultaneously along with the inner road of each said divided section and the outer road of each said divided section to thereby simultaneously free of traffic first each said inner road and then each said outer road, and second means for directing traffic on said minor road to cross said inner and outer roads of each said divided section when alternately freed of traffic by said first means and to halt at the intersection with said inner and outer roads when in use by traffic according to the direction by said first means.

3,399,380
INTERCONNECTION NETWORK
Lester M. Spandorfer, Cheltenham, Pa., assignor to Sperry Rand Corporation, New York, N.Y., a corporation of Delaware
Filed Dec. 31, 1963, Ser. No. 334,889
5 Claims. (Cl. 340—147)

The present system involves first and second sets of interconnecting networks which enable a connection to be made from any terminal of said first set through said second set to any other terminal of said first set. In order to provide a completely non-blocking system, the number

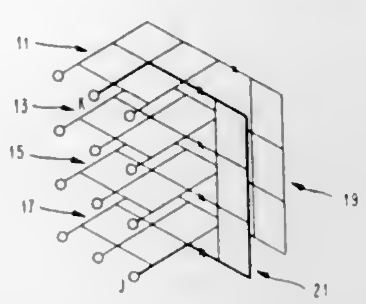

of individual networks in the second set is equal to one less than four times the number of connectable terminals of an individual network of said first set.

3,399,381
REED DRIVEN SOLID STATE READ-OUT UNIT RESPONSIVE TO PLURAL FREQUENCIES
Wilbur Jackson, P.O. Box 286, Chatsworth, Ga. 30705
Filed Jan. 7, 1966, Ser. No. 519,284
4 Claims. (Cl. 340—171)

A receiver responsive to plural frequencies is disclosed. Plural resonant reed relays responsive to the proper combination of frequencies complete an alarm circuit through SCR switching elements.

3,399,382
DATA TRANSFER SYSTEM
John E. Thron, Cambridge, and Thomas O. Holtey, Newton Lower Falls, Mass., assignors to Honeywell Inc., a corporation of Delaware
Filed May 7, 1965, Ser. No. 454,074
16 Claims. (Cl. 340—172.5)

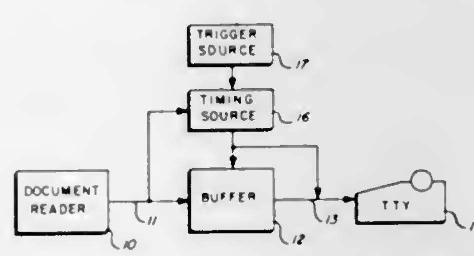

Data which is asynchronously received by a buffer from an input station is transferred through the buffer to an output station under the control of a predetermined count of a single timing source. Both the stations operate at the same nominal rate and synchronization therebetween is effected by advancing or retarding such count in accordance with timing information derived from the asynchronously arriving data. In the absence of such timing information derived from the data at said input modification thereby making it appear as if both stations were operating at the same nominal rate.

3,399,383
SORTING SYSTEM FOR MULTIPLE BIT BINARY RECORDS
Philip N. Armstrong, 17331 Keegan Way, Santa Ana, Calif. 92705
Filed July 26, 1965, Ser. No. 474,723
3 Claims. (Cl. 340—172.5)

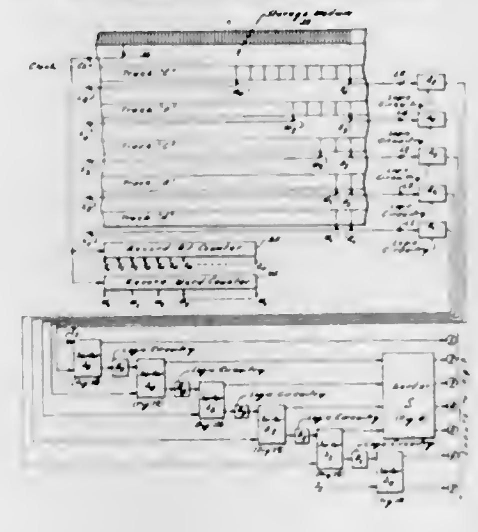

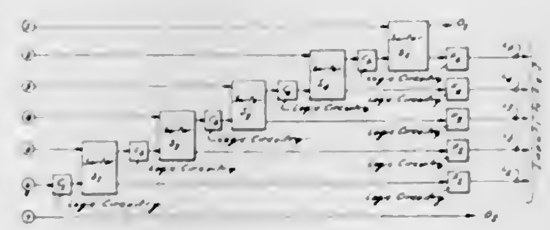

A sorting system for multi-bit binary records is described in the following specification, and which is capable of responding to a control field in each record in order to sort the records in an ascending or descending progression. The system has the feature in that the input operation, whereby records are fed into the sorting system, may be interrupted at any time and subsequently resumed, in which case the additional record words fed into the system are sorted with the record words previously entered into the system. In addition, the system is capable of providing sorted outputs simultaneously with input operations. That is, a first group of records may be produced by the system in a sorted condition, while a second group of records to be sorted are being fed into the system.

3,399,384
VARIABLE PRIORITY ACCESS SYSTEM
Peter N. Crockett, Matthew A. Krygowski, and Thomas S. Stafford, Wappingers Falls, N.Y., assignors to International Business Machines Corporation, Armonk, N.Y., a corporation of New York
Filed Sept. 10, 1965, Ser. No. 486,326
17 Claims. (Cl. 340—172.5)

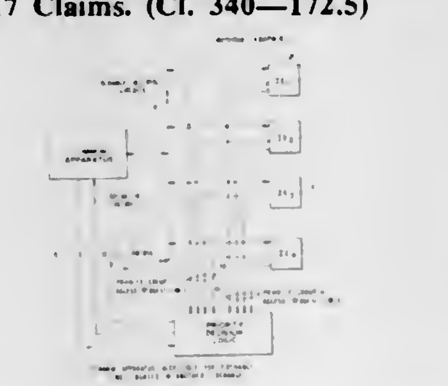

Input-output functions of a data processing system are expedited. The input-output channels of the system are permitted to vary priority of requests for connection to computer main storage, and to add or remove buffer registers in respective queues of tandem buffer registers between peripheral devices and main storage. Priority and queue length are varied as a function of load conditions within the respective queue.

3,399,385
ACTIVITY REPORTING SYSTEM
James Edward Gorman, West Amwell Township, Hunterdon County, Geoffrey Dawson Green, West Windsor Township, Mercer County, and Ronald Tevonian, Montgomery Township, Somerset County, N.J., assignors to Western Electric Company, Incorporated, New York, N.Y., a corporation of New York
Filed Dec. 7, 1965, Ser. No. 512,137
20 Claims. (Cl. 340—172.5)

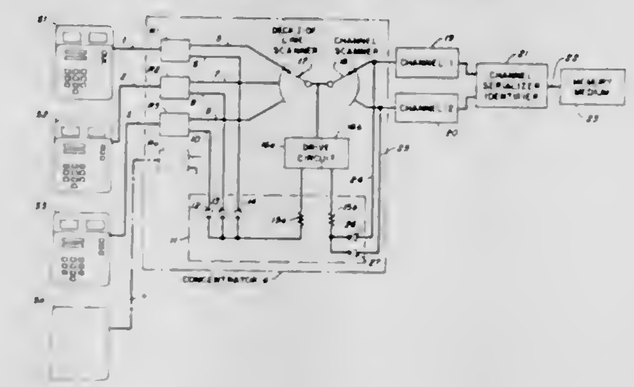

A data collection system includes a number of remote, data entry stations which are connected, respectively, to a number of registration elements on a one-to-one basis. The registration elements are bistable devices normally in a first state. A request for service by one station places its registration element in a second state. All stations are terminated in a scanning device, which, in response to the presence of the second state at any of the registration elements, searches for the requesting station. Upon finding the reqeusting station, the scanning device ascertains an available one of a number of transmission paths. The scanning device then interconnects the found station through the ascertained path to a recorder and generates a signal uniquely identifying the found station. Further facilities impress the station-identifying signal on the recorder while data from the requesting and now interconnected station passes through its element and along the path to the recorder.

Additional features may include:

(1) A number of scanning devices in which selected stations are terminated. If a first of the scanning devices is already busy, i.e., already interconnecting a first station and a first path, that first scanning device passes both the service request and data from a second station on to a second scanning device. The second scanning device then performs as described above.

(2) Facilities in the registration elements which, when the elements are in the second state, render the elements transparent to scanning devices other than the one which has found that particular element.

(3) Expedients which, while a first scanning device is ascertaining an available path, prevent other scanning devices from doing likewise, until the first device establishes a station-path interconnection.

3,399,386
APPARATUS FOR DELAYING A CONTINUOUS ELECTRICAL SIGNAL
Ray A. Walker, Pasco, Wash., assignor to the United States of America as represented by the United States Atomic Energy Commission
Filed Mar. 8, 1966, Ser. No. 534,973
6 Claims. (Cl. 340—172.5)

An apparatus for delaying an input analog signal includes a variable oscillator for generating timing pulses, an analog to digital converter receiving the input analog signal, a magnetic core memory, a counter receiving the timing pulses for cyclically selecting successive storage

locations in the core memory, circuitry for writing the analog to digital output in selected core memory storage locations after the previously stored information therein has been read, and a digital to analog converter receiving

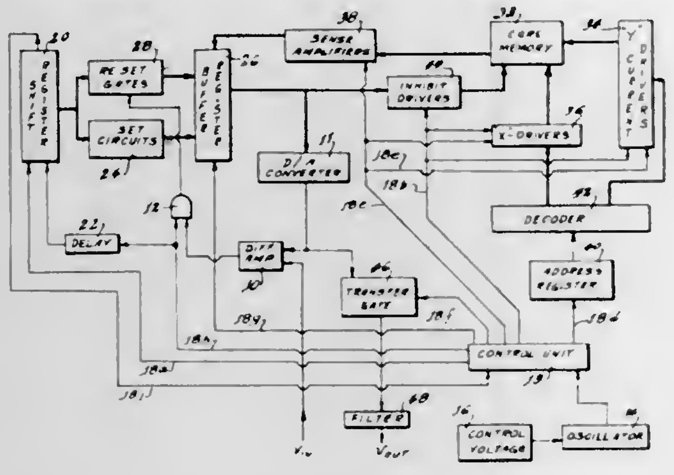

the information read from selected core memory storage locations and converting the information to analog form representative of the original input analog signal but delayed therefrom by the time required to cycle through all storage locations of the core memory.

3,399,387
TIME DIVISION ELECTRONIC MODULAR MATRIX SWITCHING SYSTEM
Allan A. Kunze, Rome, N.Y., assignor to the United States of America as represented by the Secretary of the Air Force
Filed June 3, 1966, Ser. No. 555,937
4 Claims. (Cl. 340—172.5)

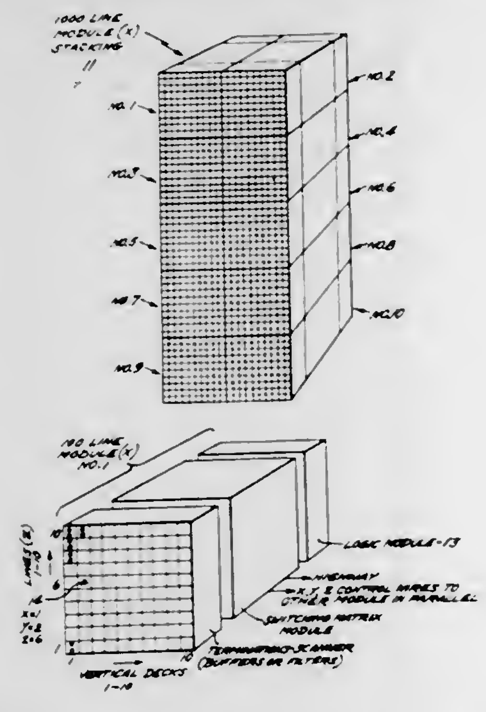

1. A time division non-blocking switching system having logic, control and cross-point switching memory integrated with a switching matrix in an expandable modular configuration comprising:

(a) a plurality of x switching matrix modules, each module having
  (1) an x outgoing highway;
  (2) a plurality of yz input lines and yz output lines, the yz output lines each having a unique time slot;
  (3) and energizable cross-points for connecting the xy input and output lines to the highway;
(b) means for scanning the input lines and gating the output highways sequentially at fixed time slots corresponding to the output address;
(c) a function detector connected to the input lines for recognizing signal functions;
(d) a control register fed by the function detector for establishing time slots;
(e) a recirculating switching address register for each module containing the yz output line address entered at the input time slot for energizing the cross points;
(f) and a binary-to-decimal converter interposed between the switching address register and the cross points.

3,399,388
SUPERCONDUCTIVE INFORMATION STORAGE DEVICES
Norman Dennis Richards, Tilgate, Crawley, England, assignor to North American Philips Co., Inc., New York, N.Y.
Filed Feb. 18, 1964, Ser. No. 345,699
Claims priority, application Great Britain, Feb. 18, 1963, 6,469/63
20 Claims. (Cl. 340—173.1)

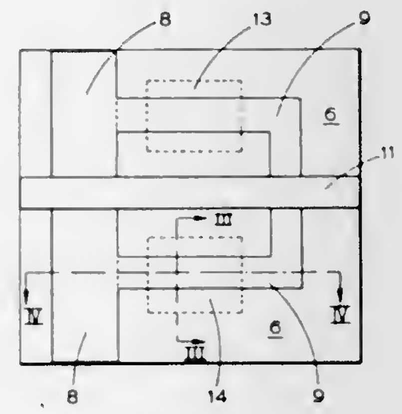

1. A superconductive device comprising a first superconductive path interconnecting a first point and a second point, a second superconductive path electrically connected in parallel with said first path between said first and second points and forming therewith a closed superconductive loop, input means for supplying current to said first path, a conductor electrically insulated from said first and second paths and arranged in crossover relationship with said first and second paths, means including said conductor for applying a magnetic field to said loop to selectively switch a portion thereof between the normally conductive and superconductive states thereby to produce a persistent circulating current in said loop, a superconductive ground plane having a substantial surface area facing and disposed closely adjacent said loop, said ground plane having an aperture therein which spans a portion of said second superconductive path, the inductance of said loop being partly determined by the dimensions of said aperture, and means for sensing said circulating current comprising means for causing a portion of said superconductive loop to become normally conductive thereby to produce a transient decay of said circulating current having a time constant determined by the inductance of said loop.

3,399,389
MAGNETIC MEMORY MATRICES
William D. Bohannon, Jr., Graham, N.C., assignor to Western Electric Company, Incorporated, New York, N.Y., a corporation of New York
Filed Oct. 14, 1963, Ser. No. 316,165
18 Claims. (Cl. 340—174)

A magnetic memory matrix in the form of a woven fabric includes a plurality of paralled magnetizable conductive strands alternating with return wires and interspaced by first non-conductive fibers. A plurality of parallel word coils interspaced by second non-conductive fibers form loops around the magnetizable strands. The

first and second nonconductive fibers are interwoven with the magnetizable strands and word coils such that the

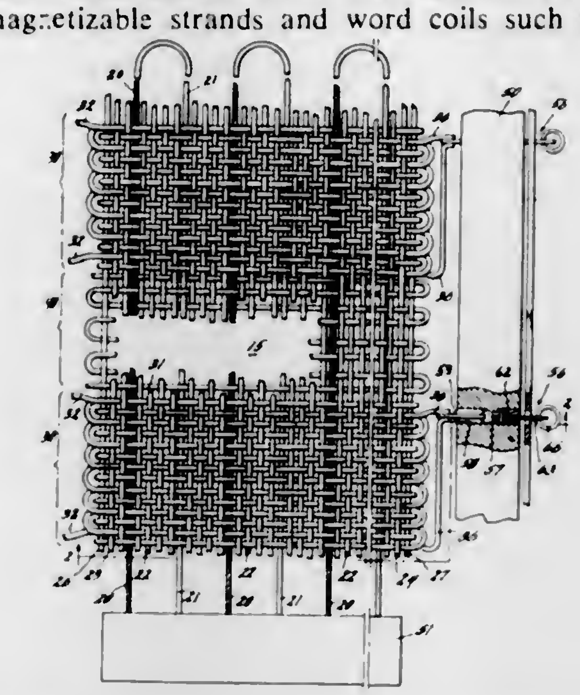

strands and word coils are maintained in predetermined relative positions.

3,399,390
INTEGRATED SEMICONDUCTOR DIODE MATRIX
Rabah A. Shahbender, Princeton, N.J., assignor to Radio Corporation of America, a corporation of Delaware
Filed May 28, 1964, Ser. No. 371,017
11 Claims. (Cl. 340—174)

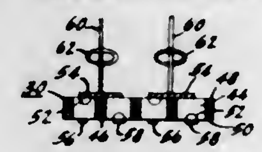

1. An array of semiconductor diodes disposed in a matrix, said array being fixed in a sheet-like form with opposed major surfaces, each of said diodes having an electrode exposed on each of said surfaces, some of said diodes having their cathode electrodes exposed on one of said surfaces and others of said diodes having their anode electrodes exposed on said one surface, means on one of said major surfaces connecting predetermined groups of similarly poled electrodes together, and means on the other one of said major surfaces connecting pairs of dissimilarly poled electrodes together.

3,399,391
HOLDING CIRCUIT FOR SERVO MECHANISM
Jerrold P. Barrosse, North Hills, Pa., assignor to Sperry Rand Corporation, New York, N.Y., a corporation of Delaware
Filed June 10, 1964, Ser. No. 374,054
6 Claims. (Cl. 340—174.1)

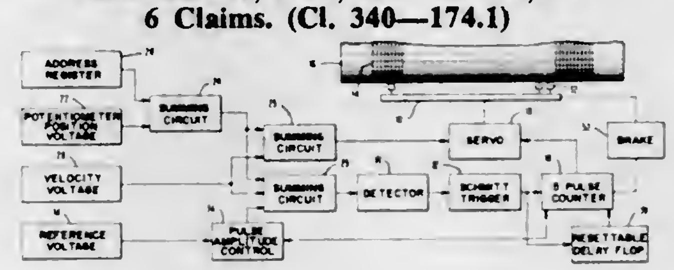

A control circuit for stabilizing the operation of a servo mechanism for positioning a magnetic head over a recording drum is provided. The control circuit includes a source of recurrent reference pulses and a counter mechanism. On positioning the head an error voltage is applied to the control circuit so as to delete the application of reference pulses to the counter. After a predetermined delay period the counter resets and renders the servo mechanism operative. When the head mechanism nears its new position the error voltage diminishes in magnitude and the recurrent pulses are again applied to the counter. After a predetermined pulse count the counter operates to render the servo mechanism inoperative whereby small transient error voltages are rendered ineffective to cause a fortuitous operation of the servo mechanism.

3,399,392
MAGNETIC TRANSDUCER POSITIONING APPARATUS
Hisashi Funazuka, Kawasaki, Japan, assignor to Fujitsu Limited, Kawasaki, Japan, a corporation of Japan
Filed Sept. 24, 1964, Ser. No. 398,934
5 Claims. (Cl. 340—174.1)

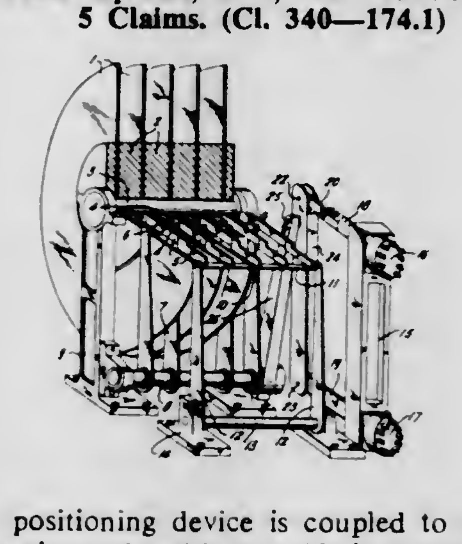

A first positioning device is coupled to one end of a first connecting rod and is movable in n possible positions each entailing a unit increment of movement l. A second positioning device is coupled to one end of a second connecting rod and is movable in m possible positions each entailing a unit increment of movement bl/am. The first connecting rod has another end pivotally affixed by a first pivot pin to one end of a link and the second connecting rod has another end pivotally affixed by a second pivot pin to the other end of the link. The distance between the second and third pivot pins is b and the distance between the first and third pivot pins is a. A lever is pivotally affixed at one end by a third pivot pin to an intermediate point of the link and is coupled at its other end to one end of a head arm which supports magnetic transducer heads, so that the heads are movable to nm positions each entailing an increment of movement of $bl/a+b$.

3,399,393
TWO-PROBE THREE-GAP FLUX SENSITIVE MAGNETIC HEAD
David Chang, Poughkeepsie, N.Y., assignor to International Business Machines Corporation, New York, N.Y., a corporation of New York
Filed Dec. 7, 1964, Ser. No. 416,453
10 Claims. (Cl. 340—174.1)

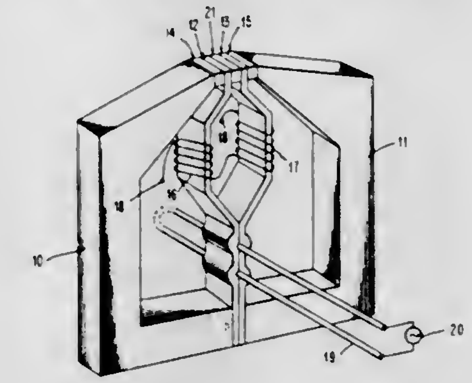

A magnetic reading head is constructed to provide an output signal which is a derivative signal of the space between magnetic flux paths as opposed to the speed of pas-

sage of flux transversals past the reading head. The construction includes two outer magnetic core pieces and two inner magnetic probes which provide, at the magnetic tape surface, three non-magnetic gaps, with each of the two probes having a gap between them, and each probe forming a gap with an associated outer pole piece. An excitation current is passed through the magnetic probes, each of which has oppositely wound sense windings, to thereby provide the magnetic reading head with the ability to read not only magnetic tape in motion, but also magnetic tape which is stationary or moving at a variable speed.

3,399,394
CYCLICAL RANDOM ACCESS MAGNETIC DATA STORAGE SYSTEM
Perrin F. Smith, Saratoga, Calif., assignor to International Business Machines Corporation, Armonk, N.Y., a corporation of New York
Filed Aug. 25, 1965, Ser. No. 482,365
32 Claims. (Cl. 340—174.1)

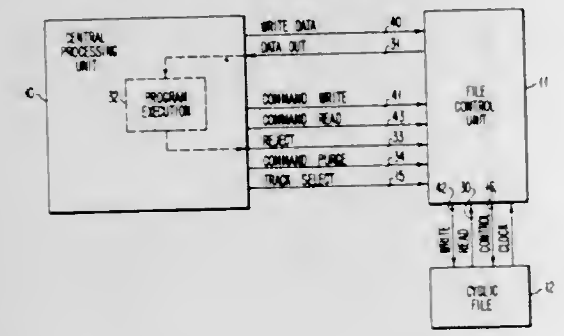

Method and apparatus for storing data in a large cyclical random access memory. The memory is divided into a number of regions and each region is further divided into many small blocks. Each block includes a block start character, a status character, a chain number, and a data area. The data records to be stored are of variable length and may occupy a number of blocks in a region, terminating with an end of record character. Purging of a record is accomplished by changing the status character of each block having the record from "full" to "empty."

To write a new record, each block after the region start character is counted until the first empty block is encountered. The resultant count number is then made the chain number of the record and is written in the chain number portion of the block. If the new record cannot be fully accommodated in the vacant block, the remainder is written in the succeeding next available blocks until the end of record character is recorded. The chain number is recorded in each of the blocks in which the remainder of the record is recorded, thereby chaining the complete record.

Since the recording of the record is always begun at the first available empty block and continued in the immediately subsequently available blocks, the memory is always packed to the front, conserving recording space.

3,399,395
CHAIN SWITCH
Hans Heymann, Wilhelmshaven, Germany, assignor to Olympia Werke AG, Wilhelmshaven, Germany
Filed Aug. 13, 1964, Ser. No. 389,358
Claims priority, application Germany, Aug. 17, 1963, O 9,623
16 Claims. (Cl. 340—147)

An electronic chain switch having a plurality of stages, each including a setting input which, upon the application of a signal thereto, enables the respective stage to be switched from quiescent to actuated state, and an actuating input which, upon the application of a signal thereto, switches the respective stage from quiescent to actuated state. The setting inputs are normally connected to a signal source, while the actuating inputs are connected to respective keys of a keyboard. Each stage has an inhibiting element whose output is connected to the setting input of the next succeeding stage such that when any one stage has a signal applied to its actuating input, at least some of the adjacent stages are rendered in-

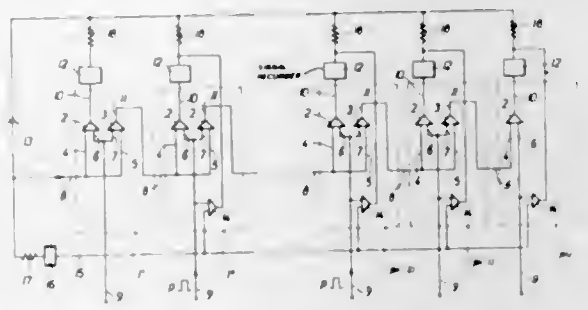

capable of being switched from quiescent to actuated state.

Consequently, only one of the stages can at any one time be switched from its quiescent to its actuated state, thereby to prevent the carrying out of a plurality of switching operations caused by the erroneous simultaneous actuations of a plurality of keys. Means are also provided for indicating when signals are being applied to more than one of the actuating inputs at any one time.

3,399,396
SUPERCONDUCTIVE DATA STORAGE AND TRANSMISSION APPARATUS
Kendal T. Rogers, Mountain View, Calif., assignor to Varian Associates, Palo Alto, Calif., a corporation of California
Filed Nov. 16, 1964, Ser. No. 411,394
8 Claims. (Cl. 340—173.1)

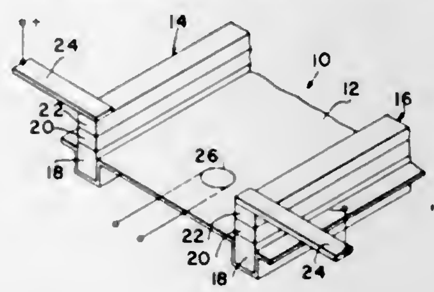

A data signal processing device, the basic element of which comprises a superconducting body bounded by laminate guides or "guard rails." A combination of this basic element with suitable signal induction means enables the storage and transmission of information in the form of magnetic flux "patches." By magnetically coupling a plurality of these signal processing elements into a predetermined configuration, data may be stored, transferred or regenerated.

3,399,397
APPARATUS FOR SENDING AND RECEIVING A SIGNAL ON AN A-C LINE
Elliot Josephson, 1206 Windimer Drive, Los Altos, Calif. 94022
Filed Jan. 7, 1966, Ser. No. 519,306
9 Claims. (Cl. 340—216)

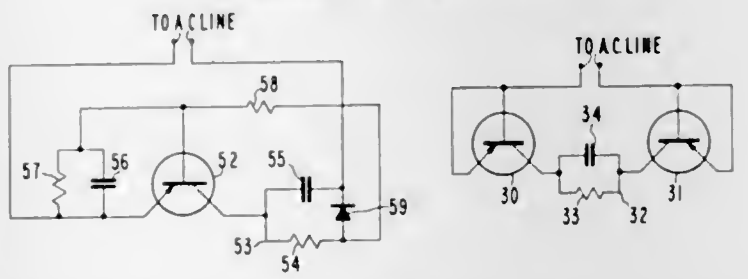

Apparatus for sending and receiving a sawtooth waveform signal through an A-C power line having a sawtooth wave generator connected into the A-C line to modulate the line on at least one-half of its cycle, a detector also connected to the A-C line for detecting the presence of the waveform on the line, and a transducer operative in response to the detector of the waveform.

3,399,398
COMBUSTIBLE GAS MONITORING SYSTEM
Earl Matthew Becker, Pittsburgh, Alexander Crawford McInnes, Export, and Herbert Heller, Pittsburgh, Pa., assignors to Mine Safety Appliances Company, Pittsburgh, Pa., a corporation of Pennsylvania
Filed July 27, 1965, Ser. No. 475,120
16 Claims. (Cl. 340—237)

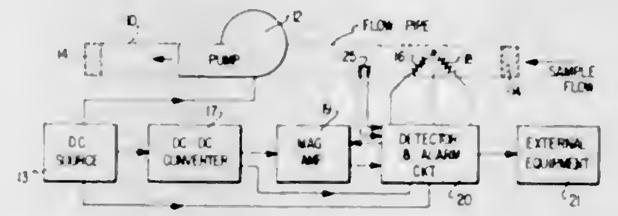

1. A monitoring and alarm system for combustible gases comprising in combination: means for providing a DC voltage; magnetic amplifier means coupled to said means for providing a DC voltage and being powered thereby; a combustible gas detector circuit coupled to said magnetic amplifier means and said means for providing a DC voltage and having an electrical bridge circuit which is responsive to the presence of a combustible gas for generating a signal which is translated to said magnetic amplifier means which in turn generates a pulsating output signal as long as said bridge circuit senses said combustible gas of a first predetermined level of concentration but generates a steady state output signal for a second level of concentration; an alarm circuit being responsive to said pulsating and steady state output signal coupled to said magnetic amplifier means, and including means for shutting down an apparatus under control when said combustible gas of said second predetermined level persists for a preset period of time and delays the possible subsequent turning on of said apparatus under control for still another preset period of time after said output signal ceases signifying a safe condition for operation.

3,399,399
HIGH WATER ALARM FOR DRAINAGE SUMP
Jerome G. Apfelbaum, Northbrook, Ill., assignor to Faultsensors Inc.
Filed July 7, 1965, Ser. No. 470,104
2 Claims. (Cl. 340—244)

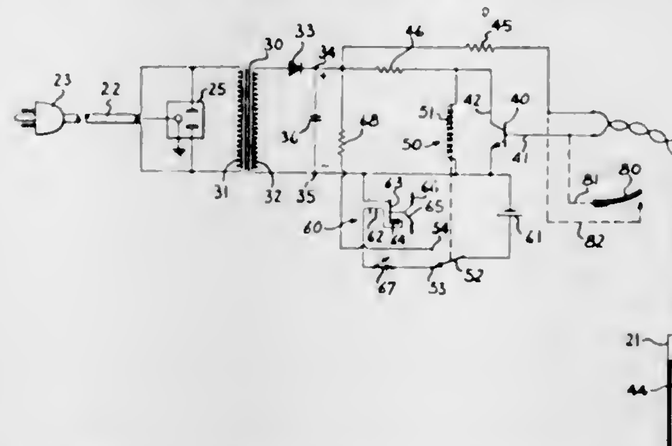

A high water alarm for a sump pump including a relay, normally energized by the regular A.-C. supply line, which is dropped out to complete a circuit including a buzzer alarm and a battery by reason of a rise in water level or by reason of failure of the supply line voltage. Means are provided for maintaining the battery constantly in condition to operate the buzzer alarm and for transmitting the vibrations from the buzzer alarm through the connected piping.

3,399,400
BASKETBALL GAME FOUL INDICATOR
Eugene R. Lucka, Columbus, Ohio, assignor to Summit-General Industries, Inc., Columbus, Ohio, a corporation of Ohio
Filed Jan. 4, 1965, Ser. No. 422,936
7 Claims. (Cl. 340—323)

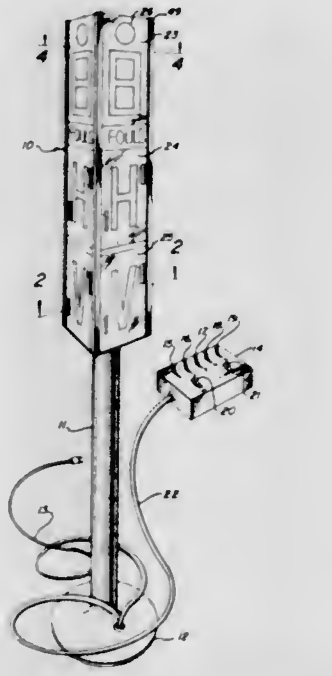

A scoreboard is disclosed consisting of a vertically extending columnar structure of square cross section supported on a round post. The square section of the scoreboard is hollow and has translucent panels on each side which have opaque portions so that when illuminated the panels provide indications. There are selectively energized illuminating light bulbs in the hollow portion of the square section for providing the desired indications, as for example, the number of fouls on a particular player, whether one or the other team or both teams are in the one and one penalty area, or any other indication in which spectators may be interested. A control box is connected electrically to the bulbs of the scoreboard so that desired indications may be controlled.

3,399,401
DIGITAL COMPUTER AND GRAPHIC INPUT SYSTEM
Thomas O. Ellis, Palos Verdes Estates, and Malcolm R. Davis, Woodland Hills, Calif., assignors, by mesne assignments, to the United States of America as represented by the Secretary of the Army
Filed June 29, 1964, Ser. No. 378,786
11 Claims. (Cl. 340—324)

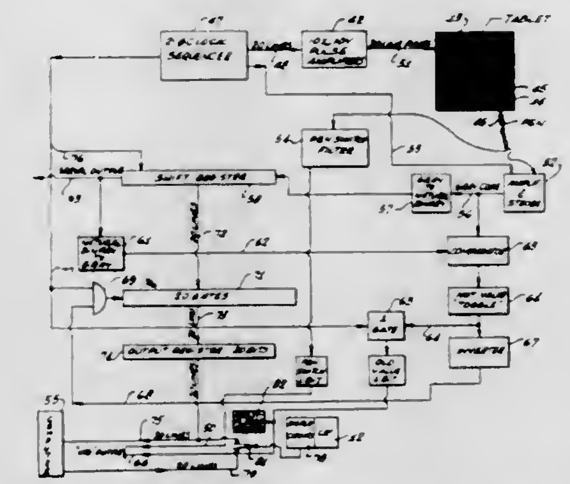

The present invention relates generally to graphic communication with a digital computer and more particularly

to a digital computer and graphic input system employing a graphic input device of the tablet-stylus type in which the position of a writing stylus with respect to a tablet "writing" surface is given by digital signals representative of the coordinates of the position of the stylus on the tablet surface. In one embodiment, the present invention includes a device for generating electronic digital signals representing hand generated graphic data, such as writing and drawing.

3,399,402
LUMINESCENT DISPLAY SYSTEM
George T. Brown, Jr., Dayton, Ohio, assignor to The National Cash Register Company, Dayton, Ohio, a corporation of Maryland
Filed Oct. 23, 1965, Ser. No. 503,989
4 Claims. (Cl. 340—324)

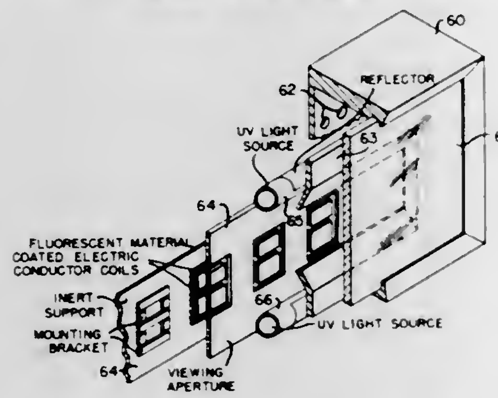

A display device, the surface of which comprises a fluorescent material which becomes light emissive when and where bathed in ultraviolet light at a normal temperature and which may be selectively quenched when heated to a predetermined temperature above the normal temperature.

3,399,403
DECODER FOR PULSE CODE MODULATION SYSTEMS OF COMMUNICATION
Alec Harley Reeves, Kenneth William Cattermole, and Ryszard Kitajewski, London, England, assignors to International Standard Electric Corporation, New York, N.Y., a corporation of Delaware
Filed Aug. 18, 1964, Ser. No. 390,293
Claims priority, application Great Britain, Sept. 25, 1963, 37,714/63
14 Claims. (Cl. 340—347)

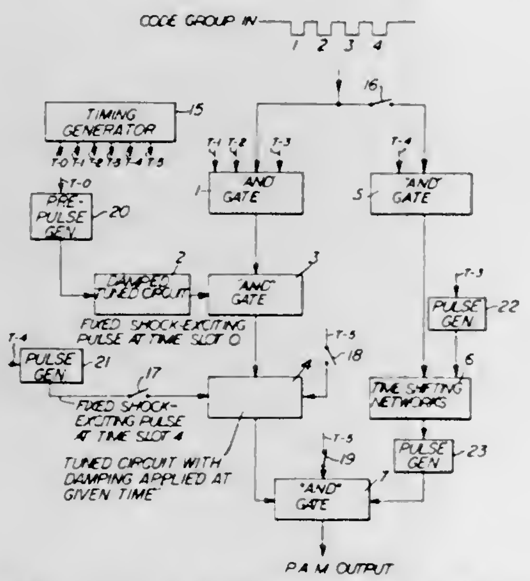

A first tuned circuit is activated prior to the arrival of a code combination to generate a wave of fixed initial amplitude and decaying at a predetermined constant amplitude ratio. This wave is sampled by digit pulses of the code combination. The resultant samples are summed and stored in a second tuned circuit to provide the decoder output. Where the code combination includes a first portion indicating one of a plurality of groups of code levels containing the coded level and a second portion indicating the coded level position in the indicated group, a given amplitude is added to the samples in the second tuned circuit, derived from the second portion, which is then damped to provide the predetermined amplitude ratio between adjacent time slots. The first portion selects the damped stored amplitude in the appropriate time slot to provide the decoder output.

3,399,404
TARGET DETECTOR FOR ACQUISITION RADAR
John A. Githens, Morris Township, Morris County, N.J., and John G. Tryon, Fairbanks, Alaska, assignors, by mesne assignments, to the United States of America as represented by the Secretary of the Army
Filed Feb. 23 1966, Ser. No. 531,011
8 Claims. (Cl. 343—5)

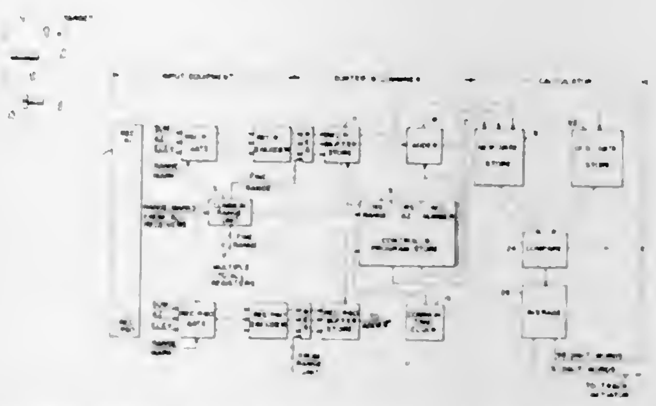

A target detector for an acquisition radar system wherein target data arriving at a high peak rate is received and stored. The stored data is released at a reduced sequential rate to a common processing unit. The target detector includes a receiving means which receives the target data, a buffer which stores the data temporarily, a control for the buffer which determines the sequential release of data, and a calculator for comparing the data and determining the presence or absence of a target.

3,399,405
VEHICLE IDENTIFIER SYSTEM
James W. Daniel, Jr., Cherry Hill, N.J., assignor to Radio Corporation of America, a corporation of Delaware
Filed Mar. 29, 1966, Ser. No. 538,426
11 Claims. (Cl. 343—6.5)

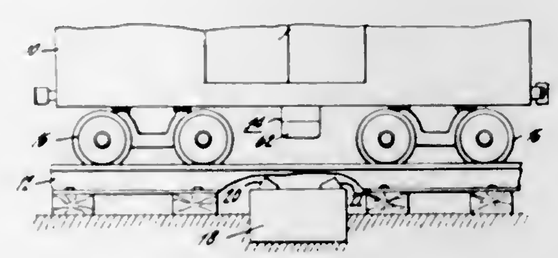

1. A vehicle identification system comprising
a transponder carried by the vehicle to be identified,
said transponder including one or more metallic resonant elements each of said metallic elements being tuned to a different one of a predetermined series of resonant frequencies,
means to transmit a pulse to said transponder to cause each of said metallic resonant elements to ring at its own resonant frequency and to radiate waves at its own resonant frequency, and
means to receive said waves and identify the vehicle carrying said transponder by detecting the presence of said waves at the resonant frequencies of said elements and the absence of other waves at frequencies in said predetermined series of resonant frequencies.

DESIGNS

AUGUST 27, 1968

212,070
EDIBLE SNACK PRODUCT
Bohdan O. Hreschak, Hawthorne, N.J., assignor to National Biscuit Company, a corporation of New Jersey
Filed Aug. 15, 1967, Ser. No. 8,280
Term of patent 14 years
(Cl. D1—2)

212,071
ROTARY STAND FOR SEWING ACCESSORIES
William D. Taylor, Wooster, Ohio, assignor to Rubbermaid Incorporated, Wooster, Ohio, a corporation of Ohio
Filed Nov. 6, 1967, Ser. No. 9,297
Term of patent 14 years
(Cl. D3—19)

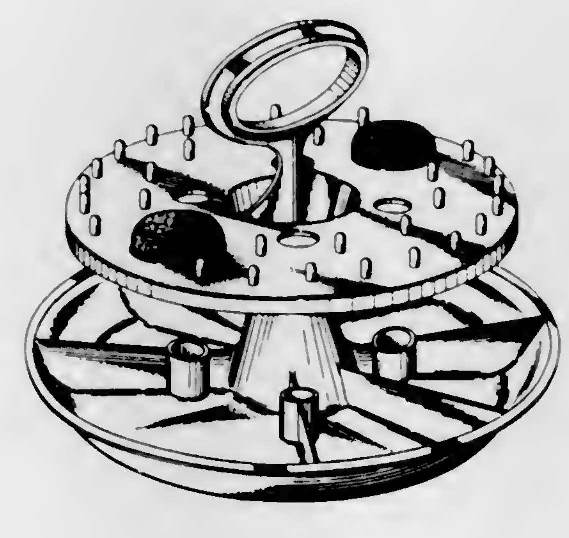

212,072
SQUEEZE BOTTLE OR THE LIKE
Colin C. MacLennan, Fairport, N.Y., assignor to The R. T. French Company, Rochester, N.Y., a corporation of Delaware
Filed Apr. 14, 1967, Ser. No. 6,698
Term of patent 14 years
(Cl. D9—2)

212,073
CONTAINER FOR OIL PRODUCTS OR THE LIKE
Carroll J. Macalusa, Baton Rouge, La., assignor to The Dow Chemical Company, Midland, Mich., a corporation of Delaware
Filed Jan. 3, 1967, Ser. No. 5,297
Term of patent 14 years
(Cl. D9—170)

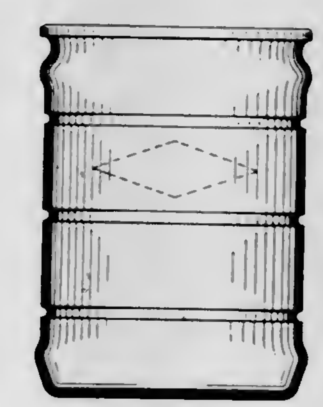

212,074
CARRYING CASE FOR BOTTLES OR THE LIKE
William W. Woodruff, Signal Mountain, and Vance E. Rhinehart, Apison, Tenn., assignors to Cumberland Corporation, Chattanooga, Tenn., a corporation of Tennessee
Filed Aug. 17, 1967, Ser. No. 8,302
Term of patent 14 years
(Cl. D9—177)

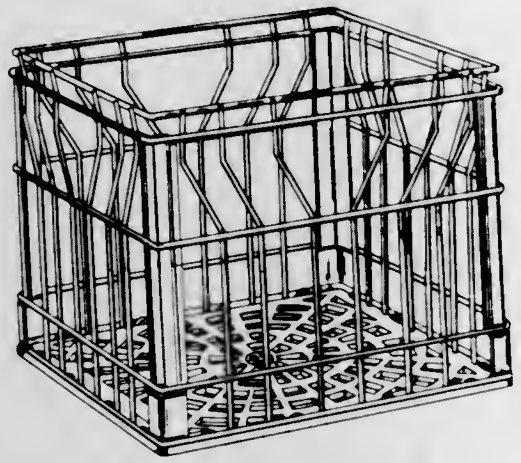

212,075
CARRIER FOR JARS OR THE LIKE
Harry Perlman, 65 Fern Drive, Roslyn, N.Y. 11576
Filed Sept. 13, 1967, Ser. No. 8,581
Term of patent 14 years
(Cl. D9—178)

212,076
DISPLAY CARD FOR PACKAGED MERCHANDISE
Harold Katz, Jericho, N.Y., assignor to Empire Brushes, Inc., Port Chester, N.Y., a corporation of New York
Filed Apr. 14, 1967, Ser. No. 6,705
Term of patent 14 years
(Cl. D9—191)

212,077
RECEPTACLE FOR STORING AND MIXING DENTAL PREPARATIONS
Erwin Baumann, Nendeln 108, Liechtenstein, and Gerhard Beham, Im Lett 798, Vaduz, Liechtenstein
Filed Dec. 19, 1966, Ser. No. 5,083
Term of patent 14 years
(Cl. D9—216)

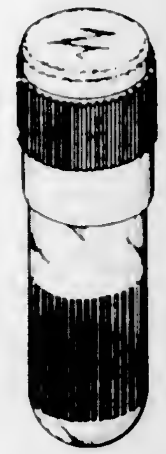

212,078
POURING CAP FOR A JAR
Frank D. O'Neill, 94 Willcocks St. W., Toronto, Ontario, Canada
Filed Dec. 15, 1967, Ser. No. 9,790
Term of patent 14 years
(Cl. D9—275)

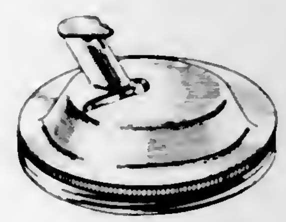

212,079
BACKPLATE OR THE LIKE
Lionel C. Algoren, Evanston, Ill., assignor to National Lock Co., Rockford, Ill., a corporation of Delaware
Filed Dec. 14, 1967, Ser. No. 9,777
Term of patent 14 years
(Cl. D10—8)

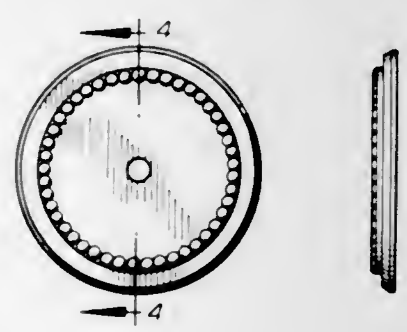

212,080
BUILDING TRIM AND GUTTER STRUCTURE
George E. Vondergoltz, Houston, Tex., assignor to Stran-Steel Corporation, Houston, Tex., a corporation of Michigan
Filed Nov. 15, 1967, Ser. No. 9,416
Term of patent 14 years
(Cl. D13—1)

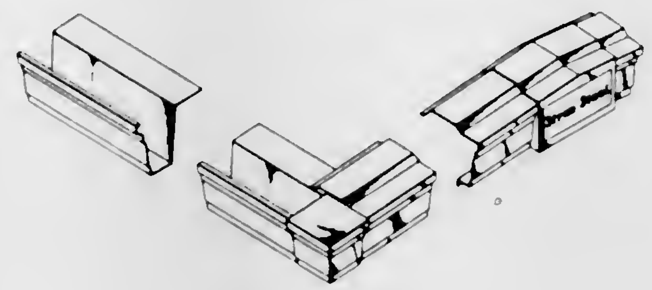

212,081
TELEPHONE BOOTH
Henry Dreyfuss, South Pasadena, Calif., and James L. Fischer, Carmel, and Norris R. Hall, Indianapolis, Ind., assignors to Bell Telephone Laboratories, Incorporated, Murray Hill, N.J., a corporation of New York
Filed Dec. 4, 1967, Ser. No. 9,624
Term of patent 14 years
(Cl. D13—1)

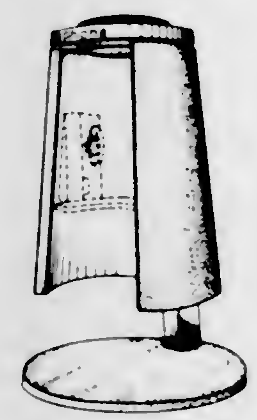

212,082
RACK FOR A HAND TRUCK
Morris F. Ruffley, Jr., Silverton, Ohio, assignor to The Coca-Cola Bottling Works Company, Cincinnati, Ohio, a corporation of Ohio
Filed May 11, 1967, Ser. No. 7,073
Term of patent 7 years
(Cl. D14—3)

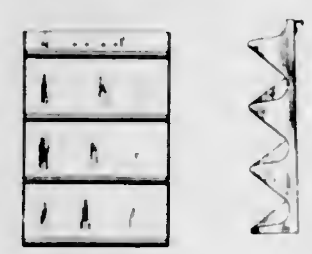

212,083
INTERIOR MIRROR FOR A MOTOR VEHICLE
David Warwick Neale, Stourport, England, assignor to Raydyot Limited, Old Hill, Stafford County, England, a British company
Filed May 9, 1967, Ser. No. 7,036
Claims priority, application Great Britain Jan. 24, 1967
Term of patent 7 years
(Cl. D14—6)

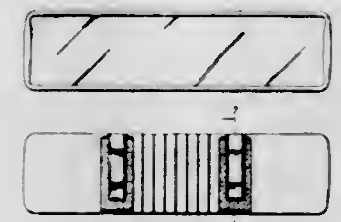

212,084
CHAIR
Patrick K. Shimizu, Seattle, Wash. (730 Komaba-cho, Meguro-ku, c/o Yamanoi Apt., Tokyo, Japan)
Filed Aug. 12, 1966, Ser. No. 3,444
Term of patent 14 years
(Cl. D15—1)

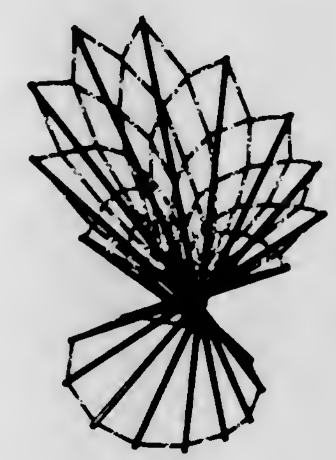

212,085
HEADREST
William S. Fulkerson, and Rose Marie E. Fulkerson, both of 2917 Hunt Drive, Rancho Cordova, Calif. 95670
Filed Dec. 20, 1966, Ser. No. 5,126
Term of patent 7 years
(Cl. D15—8)

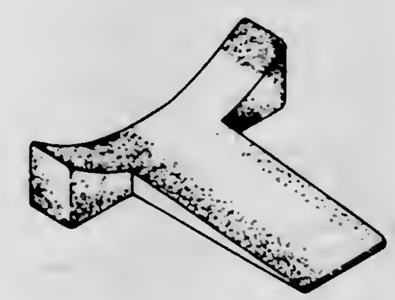

212,086
COMBINED STEP-STOOL AND BOOKRACK
Judith L. Gilman, Iroquois Ave.,
Palisades, N.Y. 10964
Filed Apr. 24, 1967, Ser. No. 6,870
Term of patent 14 years
(Cl. D15—8)

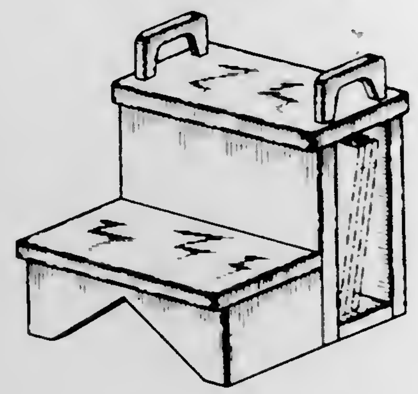

212,087
COMPARTMENTED ULTRASONIC PIPET WASHER-RINSER UNIT
Sherman S. Fishman, P.O. Box 321,
San Francisco, Calif. 94101
Filed May 12, 1967, Ser. No. 7,092
Term of patent 3½ years
(Cl. D16—2)

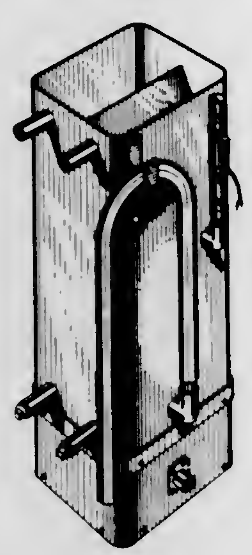

212,088
PORTABLE LABORATORY UTILITY CART
John P. Salsgiver, West Acton, Mass., assignor to United Technical Corporation, Auburndale, Mass., a corporation of Massachusetts
Filed Aug. 15, 1967, Ser. No. 8,272
Term of patent 14 years
(Cl. D16—2)

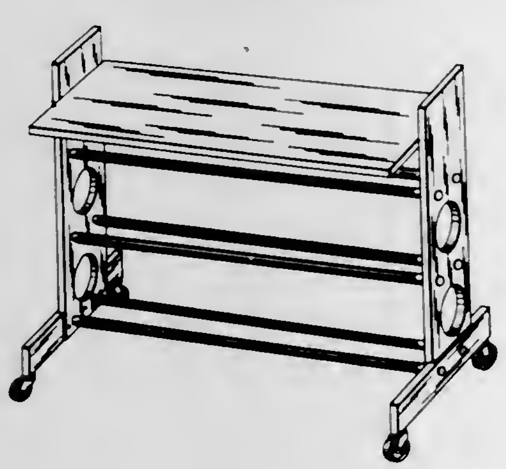

212,089
PORTABLE LIQUID STORAGE TANK
Charles D. Peifer, Shelbyville, Ill., assignor to P&H Sales Co., Shelbyville, Ill., a partnership
Filed Sept. 7, 1966, Ser. No. 3,758
Term of patent 14 years
(Cl. D23—2)

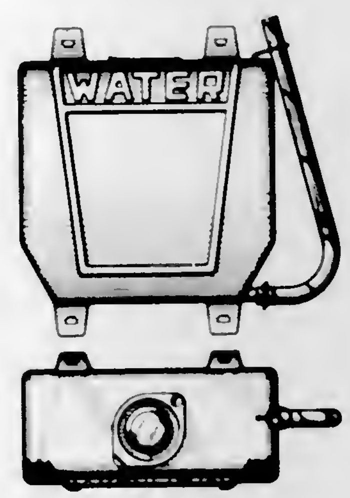

212,090
FILTER
James R. Edmiston, Sherman Oaks, Calif., assignor to Swimrite Manufacturing Co., Inc., Van Nuys, Calif., a corporation of California
Filed Nov. 20, 1967, Ser No. 9,474
Term of patent 14 years
(Cl. D23—3)

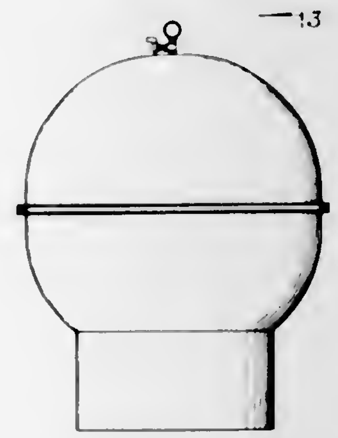

212,091
SPRINKLER HEAD ATTACHMENT
Bobby G. Cloud, 7900 Chastain Ave.,
Reseda, Calif. 91335
Filed Dec. 6, 1967, Ser. No. 9,673
Term of patent 14 years
(Cl. D23—7)

212,092
BASE FOR SPACE HEATER FOR ORCHARDS AND THE LIKE
Thomas Whitney Flood, Tacoma, Henry Anthony Stamschror, Pierce, and Arthur Eugene Tanasse, Sunnyside, Wash., assignors to Spot Heaters, Inc., Sunnyside, Wash., a corporation of Washington
Filed May 10, 1967, Ser. No. 7,051
Term of patent 14 years
(Cl. D23—80)

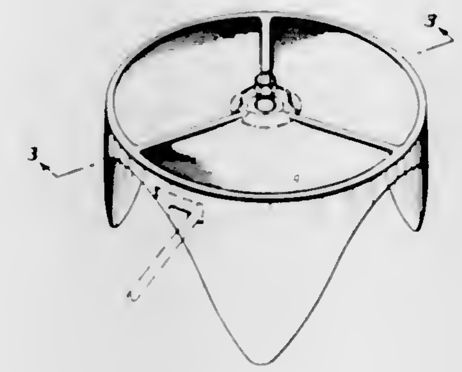

212,093
ENCLOSURE COVER FOR ELECTRIC SWITCH
Woodrow A. De Smidt, Whitefish Village, Wis., assignor to Allen-Bradley Company, Milwaukee, Wis., a corporation of Wisconsin
Filed July 13, 1967, Ser. No. 7,791
Term of patent 14 years
(Cl. D26—13)

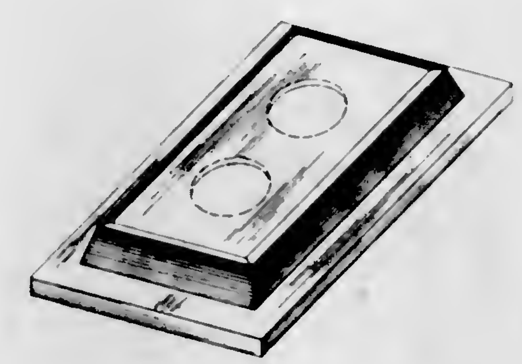

212,094
COMBINED FACE PLATE AND LOCKED COVER FOR ELECTRICAL DEVICES
Jack H. Gaines, Seal Beach, Calif., assignor, by mesne assignments to Sierra Electric Inc., Gardena, Calif., a corporation of Wisconsin
Filed Sept. 5, 1967, Ser. No. 8,496
Term of patent 14 years
(Cl. D26—13)

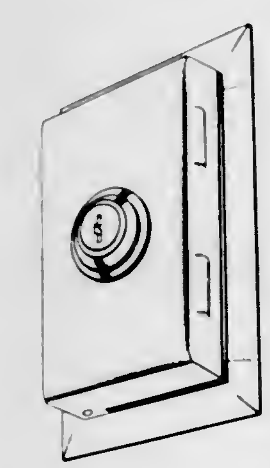

212,095
COMBINED TELEPHONE HANDSET AND DESK STAND
Henry Dreyfuss, South Pasadena, Calif., assignor to Bell Telephone Laboratories, Incorporated, Murray Hill, Berkeley Heights, N.J., a corporation of New York
Filed July 3, 1967, Ser. No. 7,682
Term of patent 14 years
(Cl. D26—14)

212,096
MODULAR POWER SUPPLY
James P. Ettinger and Christian S. Otteson, Ridgefield, Conn., assignors to Electric Regulator Corporation, Norwalk, Conn., a corporation of New York
Filed Apr. 25, 1967, Ser. No. 6,838
Term of patent 14 years
(Cl. D26—15)

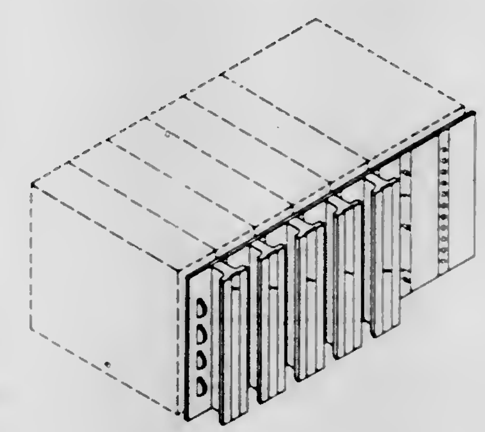

212,097
DOG COLLAR CLASP
Charles Mintz, 14—15 162nd St., Whitestone, N.Y. 11357, and Robert Katz, 801 Madison Ave., Lakewood, N.J. 08701
Filed Dec. 15, 1967, Ser. No. 9,797
Term of patent 14 years
(Cl. D30—25)

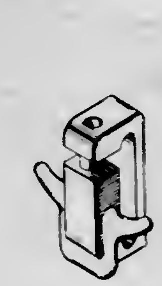

212,098
UTILITY TRAY
Paul F. McBain, Milwaukee, Wis.
(34 Somerset Place, Murray Hill, N.J. 07971)
Filed June 6, 1967, Ser. No. 7,377
Term of patent 14 years
(Cl. D33—3)

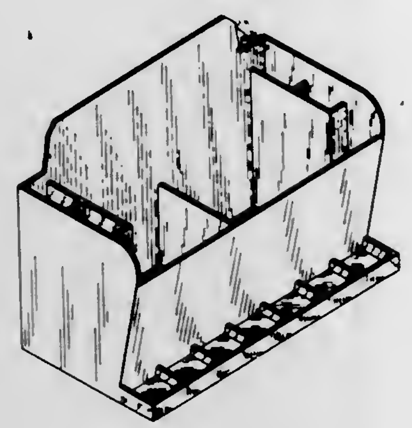

212,099
WALL-MOUNTED FOLDABLE SHELF
Kenneth F. Brothers, Melrose Park, Ill., assignor to The Nik-O-Lok Company, Indianapolis, Ind., a corporation of Indiana
Filed June 19, 1967, Ser. No. 7,518
Term of patent 14 years
(Cl. D33—3)

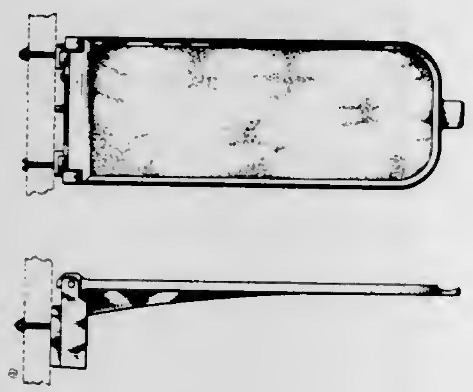

212,100
COMBINED DRAFTING TABLE AND STORAGE CABINET
Edgar Schmued, 5051 Palos Verdes Drive, N., Rolling Hills Estates, Calif. 90274
Filed May 31, 1967, Ser. No. 7,313
Term of patent 14 years
(Cl. D33—14)

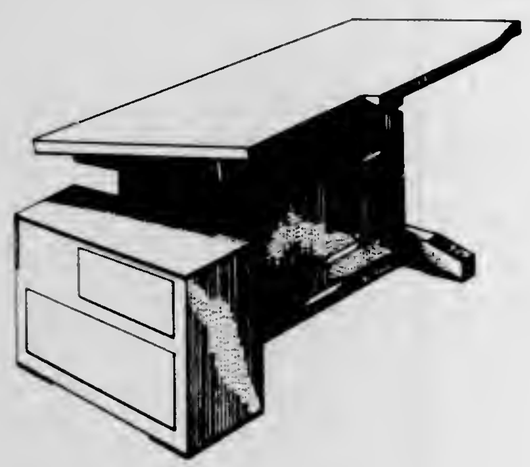

212,101
ROLL PAPER DISPENSER
Robert E. Watson, 31750 Coronet Drive, Farmington, Mich. 48024
Substituted for abandoned design application Ser. No. 4,111, Sept. 30, 1966. This application Sept. 25, 1967, Ser. No. 8,725
Term of patent 14 years
(Cl. D33—31)

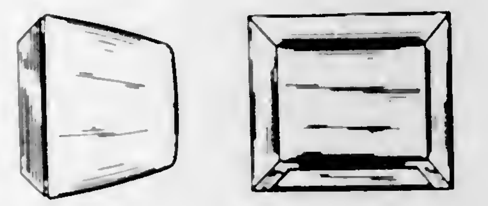

212,102
GAMEBOARD
Elizabeth W. Hawkins, R.F.D. 2, Englishtown, N.J. 07726
Filed June 29, 1967, Ser. No. 7,649
Term of patent 14 years
(Cl. D34—5)

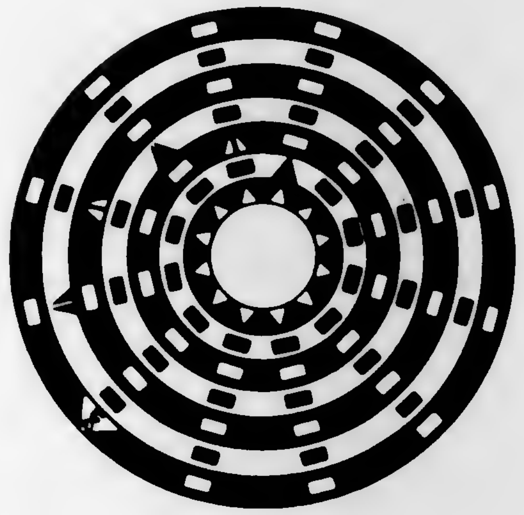

212,103
GOLF CLUB GRIP
Dean W. Myers, Newport Beach, Calif., assignor to W. J. Voit Rubber Corporation, a corporation of California
Filed July 13, 1967, Ser. No. 7,789
Term of patent 14 years
(Cl. D34—5)

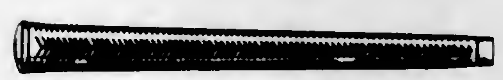

212,104
EXERCISING DEVICE
Alexander G. McDonald, West Covina, Calif., assignor to Buddy Systems, Inc., Covina, Calif., a corporation of California
Filed Oct. 31, 1967, Ser. No. 9,227
Term of patent 14 years
(Cl. D34—5)

212,105
TOY WAGON
Laverne O. Persinger and Merle L. Persinger, Burbank, Calif., assignors to Big Boy Manufacturing Co., Inc., Burbank, Calif., a corporation of California
Filed June 26, 1967, Ser. No. 7,594
Term of patent 14 years
(Cl. D34—15)

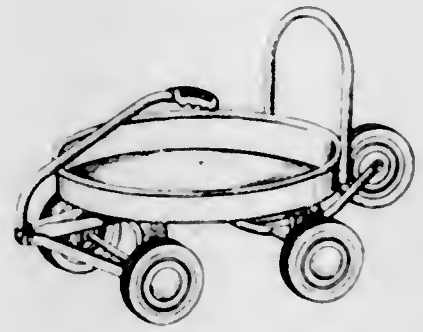

212,106
DECORATIVE CHRISTMAS TREE BASE
Charles A. Wharmby, Jr., 1137 Dixie Drive, San Dimas, Calif. 91773
Filed Feb. 5, 1968, Ser. No. 10,431
Term of patent 14 years
(Cl. D35—3)

212,107
FLOWER TRAY
Franklynn M. Stephenson, 80 Lacy St., Avon, N.Y. 14414
Filed Feb. 6, 1968, Ser. No. 10,459
Term of patent 14 years
(Cl. D35—3)

212,108
TUMBLER OR SIMILAR ARTICLE
Frank J. Benes, Lancaster, Ohio, assignor to Anchor Hocking Glass Corporation, Lancaster, Ohio, a corporation of Delaware
Filed Sept. 26, 1967, Ser. No. 8,735
Term of patent 14 years
(Cl. D36—8)

212,109
ROTATABLE CANISTER UNIT
William D. Taylor, Wooster, Ohio, assignor to Rubbermaid Incorporated, Wooster, Ohio, a corporation of Ohio
Filed Oct. 20, 1967, Ser. No. 9,079
Term of patent 14 years
(Cl. D44—6)

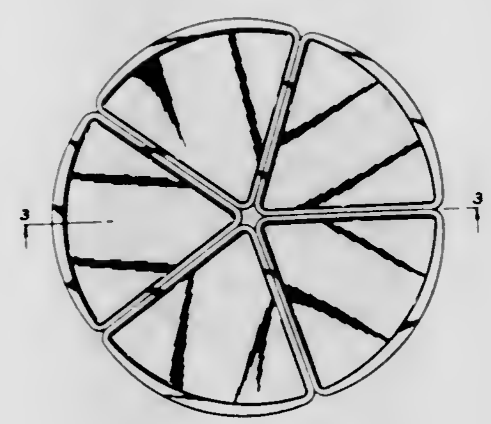

212,110
CUP OR THE LIKE
Charles B. Ketcham, Big Flats, N.Y., assignor to Corning Glass Works, Corning, N.Y., a corporation of New York
Filed Sept. 18, 1967, Ser No. 8,618
Term of patent 14 years
(Cl. D44—9)

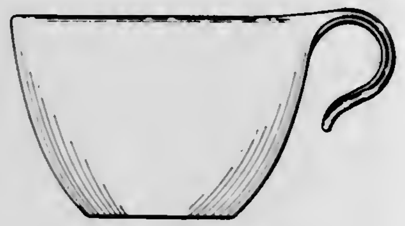

212,111
CUP HOLDER
Melvin Zaretsky, 1408-A O St., Sacramento, Calif. 95814
Filed May 5, 1967, Ser. No. 6,958
Term of patent 14 years
(Cl. D44—10)

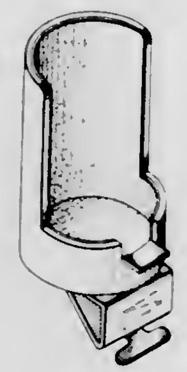

212,112
PLATE OR SIMILAR ARTICLE
Mark R. Weitzman, Elmira, N.Y., assignor to Corning Glass Works, Corning, N.Y., a corporation of New York
Filed Nov. 15, 1967, Ser. No. 9,418
Term of patent 14 years
(Cl. D44—15)

212,113
PLATE OR SIMILAR ARTICLE
Cynthia S. Gerow, Corning, N.Y., assignor to Corning Glass Works, Corning, N.Y., a corporation of New York
Filed Nov. 29, 1967, Ser. No. 9,583
Term of patent 14 years
(Cl. D44—15)

212,114
PLATE OR SIMILAR ARTICLE
Cynthia S. Gerow, and George L. Horton, Jr., Corning, N.Y., assignor to Corning Glass Works, Corning, N.Y., a corporation of New York
Filed Nov. 30, 1967, Ser. No. 9,599
Term of patent 14 years
(Cl. D44—15)

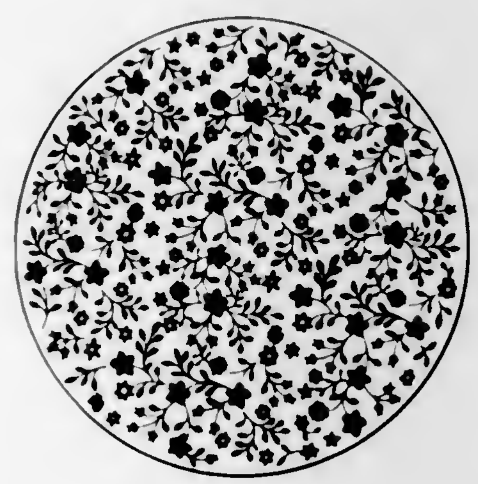

212,115
HANDLE FOR KITCHEN TOOLS OR SIMILAR ARTICLES
Dorothy J. Connor, Northlake, Ill., assignor to American Home Products Corporation, New York, N.Y., a corporation of Delaware
Filed Oct. 12, 1967, Ser. No. 8,977
Term of patent 14 years
(Cl. D44—29)

212,116
RACK FOR UTENSIL LIDS OR THE LIKE
William D. Taylor, Wooster, Ohio, assignor to Rubbermaid Incorporated, Wooster, Ohio, a corporation of Ohio
Filed Oct. 26, 1967, Ser. No. 9,172
Term of patent 14 years
(Cl. D44—29)

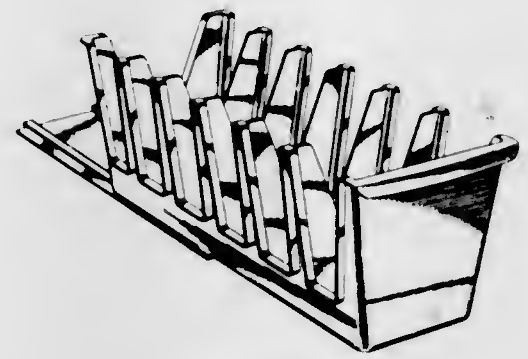

212,117
FINGER RING
Bernard I. Mechanic, Skokie, Ill. 60076
Filed Jan. 25, 1967, Ser. No. 5,554
Term of patent 14 years
(Cl. D45—10)

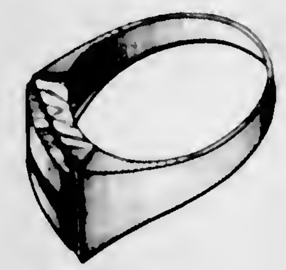

212,118
BROOCH OR SIMILAR ARTICLE
Ronald E. Tomchin, 31-33 Debevoise St., Brooklyn, N.Y. 11206
Filed Nov. 15, 1967, Ser. No. 9,419
Term of patent 14 years
(Cl. D45—19)

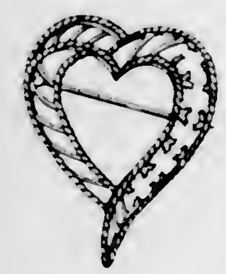

212,119
HEAD MOUNTED FLASHLIGHT
Angelo Castellano, 2320 Spruce St., Tampa, Fla. 33607
Filed July 17, 1967, Ser. No. 7,843
Term of patent 14 years
(Cl. D48—24)

212,120
PORTABLE LANTERN
Ralph T. Jacobsen, Stoughton, Wis., assignor to ESB Incorporated, Philadelphia, Pa., a corporation of Delaware
Filed Sept. 22, 1967, Ser. No. 8,693
Term of patent 14 years
(Cl. D48—24)

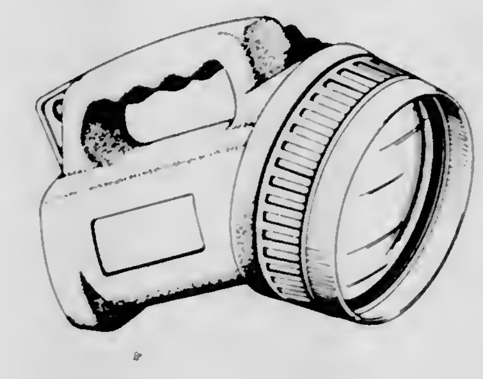

212,121
ROTATABLE WATER MANIFOLD FOR DISH WASHING MACHINES
John B. Tuthill, Kansas City, and William A. Claunch, Independence, Mo., assignors to American Dish Service of Kansas City, Missouri, Inc., Kansas City, Mo., a a corporation of Missouri
Filed Oct. 6, 1967, Ser. No. 8,897
Term of patent 14 years
(Cl. D49—1)

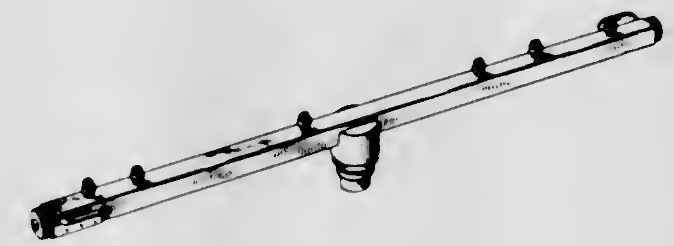

212,122
RECEPTACLE FOR LITTER OR THE LIKE
Harvey Lewis, London, England, assignor to Universal Hygienic Equipment Limited, London, England, a British company
Filed Dec. 18, 1967, Ser. No. 9,817
Claims priority, application Great Britain June 21, 1967
Term of patent 14 years
(Cl. D49—30)

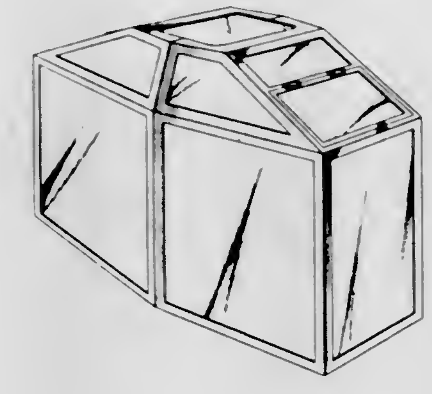

212,123
LAMINATED HASP STAPLE
Daniel J. Foote, Wauwatosa, Wis., assignor to Master-Lock Company, Milwaukee, Wis., a corporation of Wisconsin
Filed Jan. 12, 1968, Ser. No. 10,145
Term of patent 14 years
(Cl. D50—5)

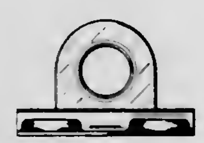

212,124
CLINICAL THERMOMETER
Raymond J. Feldman, New York, N.Y., assignor to SOSS Manufacturing Company, Detroit, Mich., a corporation of Nevada
Filed Nov. 22, 1967, Ser. No. 9,497
Term of patent 3½ years
(Cl. D52—7)

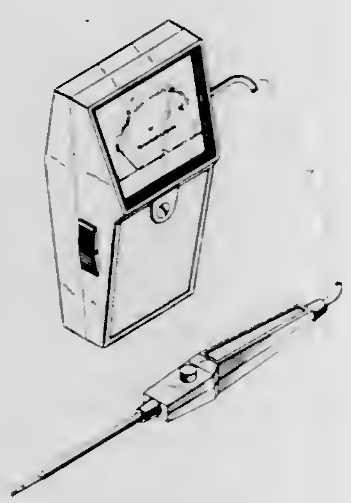

212,125
BRACKET FOR ATTACHING LEGS TO STACKING TABLES
Howard Barry, 335 Parkville Ave., Brooklyn, N.Y. 11230
Filed Oct. 9, 1967, Ser. No. 8,933
Term of patent 14 years
(Cl. D54—1)

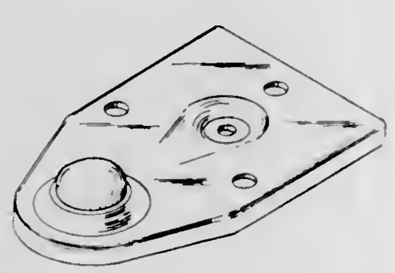

212,126
SPOON OR SIMILAR ARTICLE
Robert S. Conland, Vernon, N.Y., assignor to Oneida Ltd., Oneida, N.Y., a corporation of New York
Filed Apr. 4, 1967, Ser. No. 6,515
Term of patent 14 years
(Cl. D54—12)

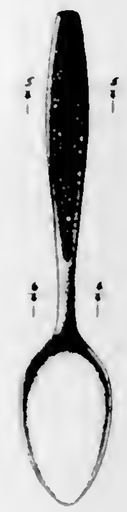

212,127
WASTE DISPOSER HOUSING
Thomas R. Smith, Newton, Iowa, assignor to The Maytag Company, Newton, Iowa, a corporation of Delaware
Filed Aug. 15, 1967, Ser. No. 8,282
Term of patent 14 years
(Cl. D55—1)

212,128
ORGAN CONSOLE
Winsor D. White, Jr., Blowing Rock, Calif., assignor to D. H. Baldwin Company, Cincinnati, Ohio, a corporation of Ohio
Filed June 30, 1966, Ser. No. 2,872
Term of patent 14 years
(Cl. D56—2)

212,129
COMBINED PHONOGRAPH AND FILM STRIP VIEWER OR SIMILAR ARTICLE
Richard Culbertson, New Hartford, and Stuart Mundt, Clinton, N.Y., assignors to General Electric Company, a corporation of New York
Filed Mar. 31, 1967, Ser. No. 6,473
Term of patent 7 years
(Cl. D56—4)

212,130
PHOTOCOPIER OR SIMILAR ARTICLE
Richard E. Rixford, Marlboro, Mass., and Peter Quay Yang, New York, N.Y., assignors to Dennison Manufacturing Company, Framingham, Mass., a corporation of Nevada
Filed June 29, 1967, Ser. No. 7,651
Term of patent 14 years
(Cl. D61—1)

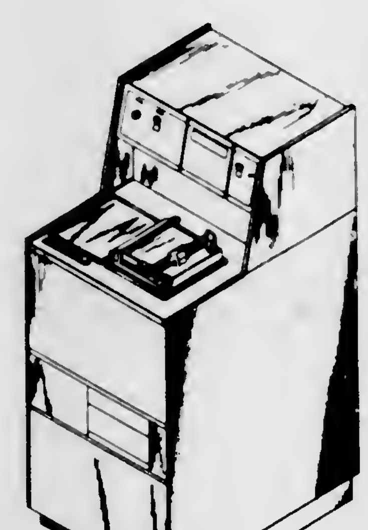

212,131
PAINT ROLLER OR THE LIKE
Toshihiko Sakow, Fort Lee, N.J., assignor to Baker Brush Co., Inc., New York, N.Y., a corporation of New York
Filed Jan 22, 1968, Ser. No. 10,238
Term of patent 14 years
(Cl. D64—18)

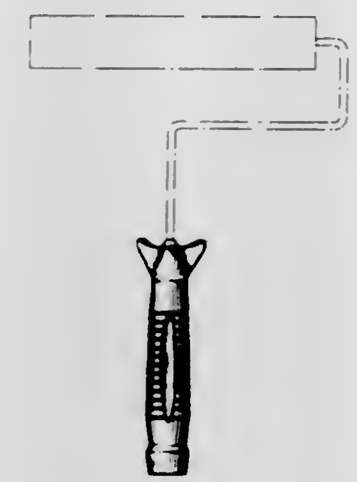

212,132
DIAPHRAGM PUMP
Ernest E. Lewis, Flowery Branch, Ga., assignor to Gainesville Machine Company, Inc., Gainesville, Ga., a corporation of Georgia
Filed June 26, 1967, Ser. No. 7,598
Term of patent 14 years
(Cl. D65—1)

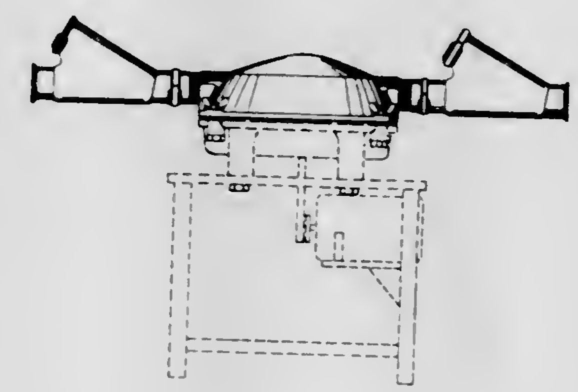

212,133
DAY GATE FOR A VAULT
George Payne, Bedford Hills, N.Y., and Joseph M. Finlay, Fairfield, Ohio, assignors to Mosler Safe Company, Hamilton, Ohio, a corporation of New York
Filed June 14, 1967, Ser. No. 7,472
Term of patent 14 years
(Cl. D69—1)

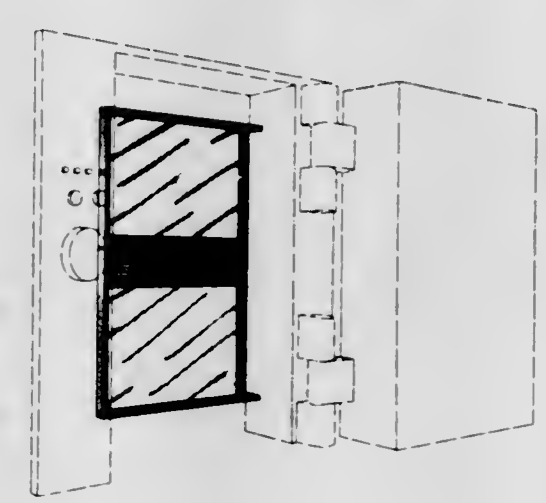

212,134
TRAFFIC CONE
Robert E. Dawson, Huntingdon Valley, Pa., assignor to R. S. Dietz Company, Syracuse, N.Y., a corporation of New York
Filed Mar. 2, 1967, Ser. No. 6,031
Term of patent 14 years
(Cl. D72—1)

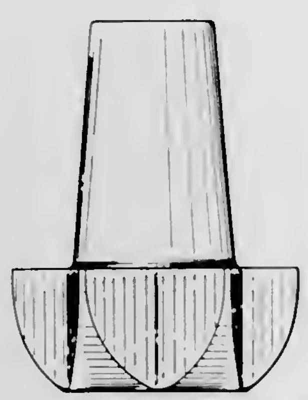

212,135
GARMENT HANGER
Robert Phillips, Roslyn, and Bernard B. Levine, New York, N.Y., assignors to Bernard Plastics Molding Corporation, New York, N.Y., a corporation of New York
Filed Sept. 5, 1967, Ser. No. 8,495
Term of patent 14 years
(Cl. D80—8)

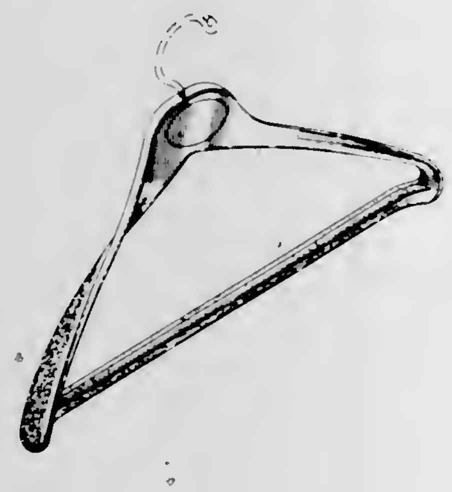

212,136
CARPET DISPLAY STAND AND THE LIKE
Leon H. Best, Galva, Ill., assignor to John H. Best & Sons, Inc., Galva, Ill., a corporation of Illinois
Filed July 31, 1967, Ser. No. 8,065
Term of patent 14 years
(Cl. D80—9)

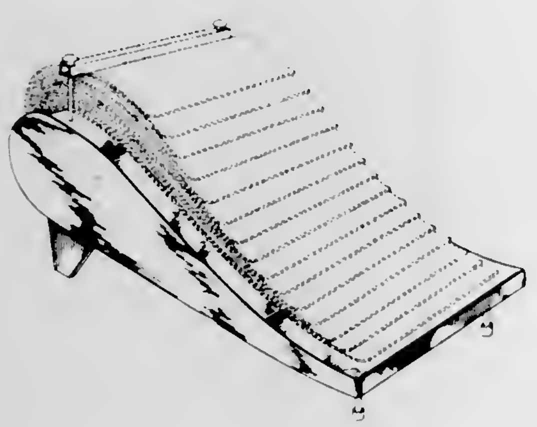

212,137
COOKING DEVICE
William H. Wiggins, % Embryon Company, 2200 Yonge St., Toronto 12, Ontario, Canada
Filed Nov. 17, 1967, Ser. No. 9,454
Term of patent 14 years
(Cl. D81—10)

212,138
BATH SPONGE HOLDER
John Chudek, Jr., 114 Grand Ave., Bellingham, Wash. 98225
Filed Mar. 13, 1968, Ser. No. 10,961
Term of patent 14 years
(Cl. D86—14)

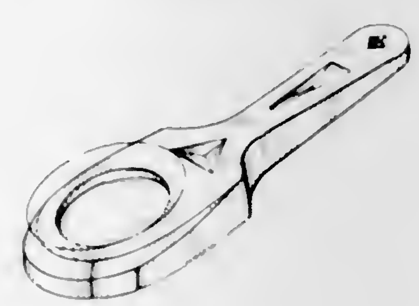

212,139
CASE FOR SKI EQUIPMENT
Michael P. Alexander, Westland, Lorenzo V. Alexander, Detroit, John Birka, Dearborn, and Darryl D. Flesher, Dearborn Heights, Mich., assignors to Cavall Specialties, Inc., Warren, Mich., a corporation of Michigan
Filed June 7, 1967, Ser. No. 7,407
Term of patent 14 years
(Cl. D87—2)

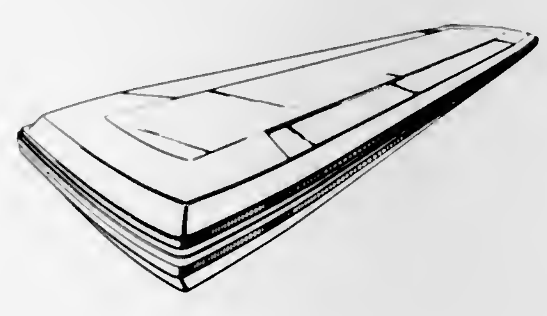

212,140
LUGGAGE CARRIER
Roger E. Hoffman, P.O. Box 473, Castle Rock, Colo. 80104
Filed Mar. 24, 1967, Ser. No. 6,378
Term of patent 7 years
(Cl. D90—3)

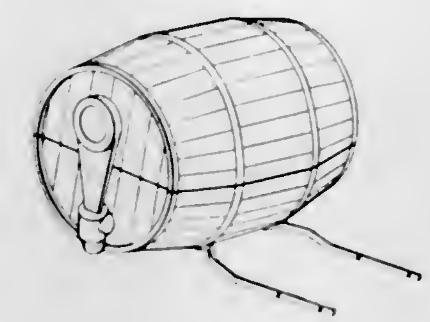

212,141
BATH MAT
Paul C. Mallonn, Wooster, Ohio, assignor to Rubbermaid Incorporated, Wooster, Ohio, a corporation of Ohio
Filed Oct. 30, 1967, Ser. No. 9,203
Term of patent 14 years
(Cl. D92—21)

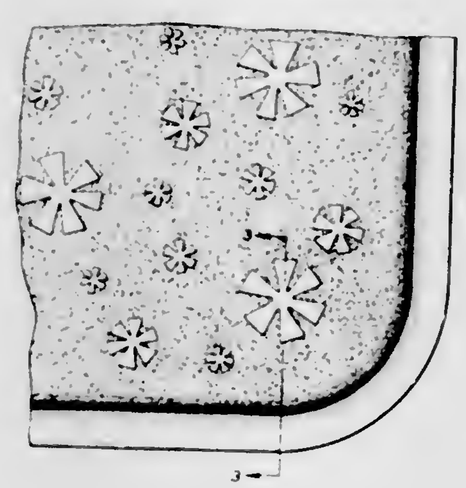

212,142
TABLECLOTH
Richard A. Fees, Ardsley, Pa., assignor to Quaker Lace Company, Philadelphia, Pa.
Filed Feb. 20, 1968, Ser. No. 10,643
Term of patent 14 years
(Cl. D92—26)

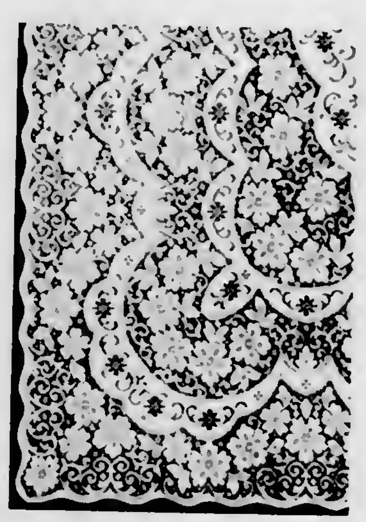

212,143
TABLECLOTH
Richard A. Fees, Ardsley, Pa., assignor to Quaker Lace Company, Philadelphia, Pa.
Filed Feb. 20, 1968, Ser. No. 10,644
Term of patent 3½ years
(Cl. D92—26)

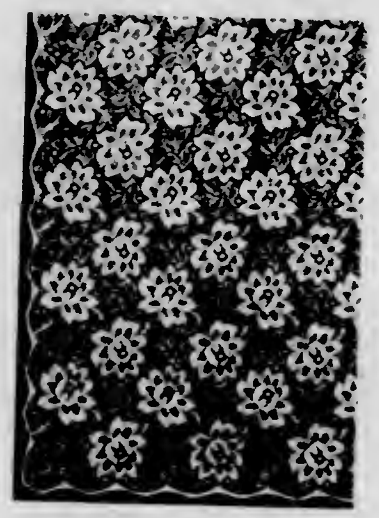

212,144
RADIOGRAPHIC/FLUOROSCOPIC UNIT
Victor E. De Lucia, Los Angeles, Calif., assignor to Torr Laboratories, Inc., Los Angeles, Calif., a corporation of California
Filed Oct. 26, 1967, Ser. No. 9,177
Term of patent 14 years
(Cl. D83—1)

212,145
ELECTRIC MASSAGER
Alfred W. Madl, Glendale, Wis., assignor to John Oster Manufacturing Co., Milwaukee, Wis., a corporation of Wisconsin
Filed Jan. 22, 1968, Ser. No. 10,258
Term of patent 14 years
(Cl. D83—1)

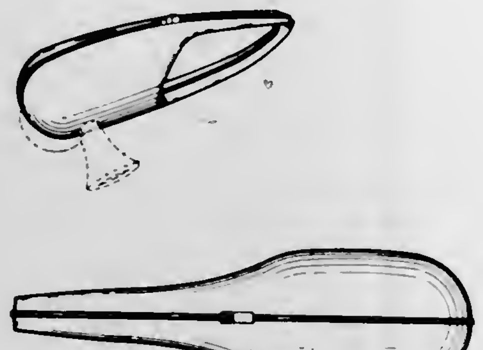

212,146
TABLECLOTH
Richard A. Fees, Ardsley, Pa., assignor to Quaker Lace Company, Philadelphia, Pa.
Filed Feb. 20, 1968, Ser. No. 10,645
Term of patent 14 years
(Cl. D92—26)

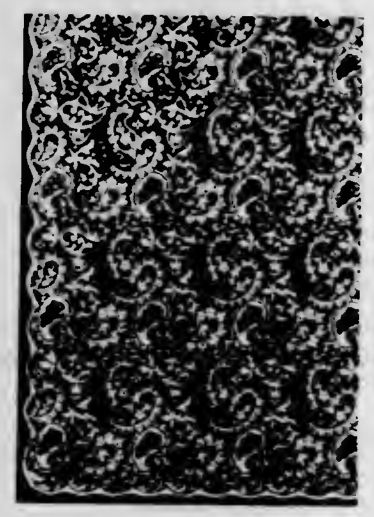

212,147
ELECTRIC SCISSORS
Henry Leong and Paul A. Witte, Kendall Park, N.J., assignors to Scovill Manufacturing Company, Waterbury, Conn., a corporation of Connecticut
Filed Dec. 11, 1967, Ser. No. 9,740
Term of patent 14 years
(Cl. D95—5)

212,148
LOOSE-LEAF NOTEBOOK COVER
Pola F. Dean, 6938 Dellrose, Dallas, Tex. 75214
Filed Apr. 3, 1967, Ser. No. 6,487
Term of patent 14 years
(Cl. D97—1)

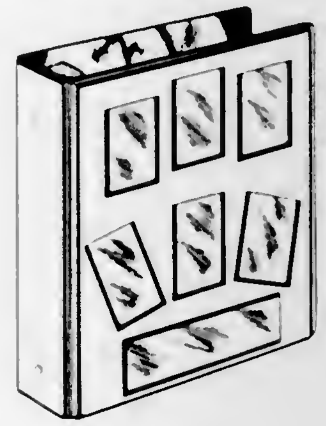

LIST OF REISSUE PATENTEES

TO WHOM

PATENTS WERE ISSUED ON THE 27TH DAY OF AUGUST, 1968

NOTE.—Arranged in accordance with the first significant character or word of the name (in accordance with city and telephone directory practice).

LIST OF DESIGN PATENTEES

General Electric Co.: *See*—
Culbertson, Richard, and Mundt. 212,129.
Gerow, Cynthia S., to Corning Glass Works. Plate or similar article. 212,113, 8-27-68, Cl. D44—15.
Gerow, Cynthia S., and G. L. Horton, Jr., to Corning Glass Works. Plate or similar article. 212,114, 8-27-68, Cl. D44—15.
Gilman, Judith L. Combined step-stool and book rack. 212,086, 8-27-68, Cl. D15—8.
Hall, Norris R.: *See*—
Dreyfuss, Henry, Fischer, and Hall. 212,081.
Hawkins, Elizabeth W. Gameboard. 212,102, 8-27-68, Cl. D34—5.
Hoffman, Roger E. Luggage carrier. 212,140, 8-27-68, Cl. D90—3.
Horton, George L., Jr.: *See*—
Gerow, Cynthia S., and Horton. 212,114.
Hreschak, Bohdan O., to National Biscuit Co. Edible snack product. 212,070, 8-27-68, Cl. D1—2.
Jacobsen, Ralph T., to ESB Inc. Portable lantern. 212,120, 8-27-68, Cl. D48—24.
Katz, Harold, to Empire Brushes, Inc. Display card for packaged merchandise. 212,076, 8-27-68, Cl. D9—191.
Katz, Robert: *See*—
Mintz, Charles, and Katz. 212,097.
Ketcham, Charles B., to Corning Glass Works. Cup or the like. 212,110, 8-27-68, Cl. D44—9.
Leong, Henry, and P. A. Witte, to Scovill Mfg. Co. Electric scissors. 212,147, 8-27-68, Cl. D95—5.
Levine, Bernard B.: *See*—
Phillips, Robert, and Levine. 212,135.
Lewis, Ernest E., to Gainesville Machine Co., Inc. Diaphragm pump. 212,132, 8-27-68, Cl. D65—1.
Lewis, Harvey, to Universal Hygienic Equipment Ltd. Receptacle for litter or the like. 212,122, 8-27-68, Cl. D49—30.
Macalusa, Carroll J., to The Dow Chemical Co. Container for oil products or the like. 212,073, 8-27-68, Cl. D9—170.
MacLennan, Colin C., to The R. T. French Co. Squeeze bottle or the like. 212,072, 8-27-68, Cl. D9—2.
Madl, Alfred W., to John Oster Mfg. Co. Electric massager. 212,145, 8-27-68, Cl. D83—1.
Mallonn, Paul C., to Rubbermaid Inc. Bath mat. 212,141, 8-27-68, Cl. D92—21.
Master Lock Co.: *See*—
Foote, Daniel J. 212,123.
Maytag Co., The: *See*—
Smith, Thomas R. 212,127.
McBain, Paul F. Utility tray. 212,098, 8-27-68, Cl. D33—3.
McDonald, Alexander G., to Buddy Systems, Inc. Exercising device. 212,104, 8-27-68, Cl. D34—5.
Mechanic, Bernard I. Finger ring. 212,117, 8-27-68, Cl. D45—10.
Mintz, Charles, and R. Katz. Dog collar clasp. 212,097, 8-27-68, Cl. D30—25.
Mosler Safe Co.: *See*—
Payne, George, and Finlay. 212,133.
Mundt, Stuart: *See*—
Culbertson, Richard, and Mundt. 212,129.
Myers, Dean W., to W. J. Voit Rubber Corp. Golf club grip. 212,103, 8-27-68, Cl. D34—5.
National Biscuit Co.: *See*—
Hreschak, Bohdan O. 212,070.
National Lock Co.: *See*—
Algoren, Lionel C. 212,079.
Neale, David W., to Raydyot Ltd. Interior mirror for a motor vehicle. 212,083, 8-27-68, Cl. D14—6.
Nik-O-Lok Co., The: *See*—
Brothers, Kenneth F. 212,099.
Oneida Ltd.: *See*—
Conland, Robert S. 212,126.
O'Neill, Frank D. Pouring cap for a jar. 212,078, 8-27-68, Cl. D9—275.
Oster, John, Mfg. Co.: *See*—
Madl, Alfred W. 212,145.
Otteson, Christian S.: *See*—
Ettinger, James P., and Otteson. 212,096.
P & H Sales Co.: *See*—
Peifer, Charles D. 212,089.
Payne, George, and J. M. Finlay, to Mosler Safe Co. Day gate for a vault. 212,133, 8-27-68, Cl. D69—1.
Peifer, Charles D., to P & H Sales Co. Portable liquid storage tank. 212,089, 8-27-68, Cl. D23—2.
Perlman, Harry. Carrier for jars or the like. 212,075, 8-27-68, Cl. D9—178.
Persinger, Laverne O. and M. L., to Big Boy Mfg. Co., Inc. Toy wagon. 212,105, 8-27-68, Cl. D34—15.
Persinger, Merle L.: *See*—
Persinger, Laverne O. and M. L. 212,105.
Phillips, Robert, and B. B. Levine, to Bernard Plastics Molding Corp. Garment hanger. 212,135, 8-27-68, Cl. D80—8.
Quaker Lace Co.: *See*—
Fees, Richard A. 212,142.
Fees, Richard A. 212,143.
Fees, Richard A. 212,146.
Raydyot Ltd.: *See*—
Neale, David W. 212,083.
Rhinehart, Vance E.: *See*—
Woodruff, William W., and Rhinehart. 212,074.
Rixford, Richard E., and P. Q. Yang, to Dennison Mfg. Co. Photocopier or similar article. 212,130, 8-27-68, Cl. D61—1.
Rubbermaid Inc.: *See*—
Mallonn, Paul C. 212,141.
Taylor, William D. 212,071.
Taylor, William D. 212,109.
Taylor, William D. 212,116.
Ruffley, Morris F., Jr., to The Coca-Cola Bottling Works Co. Rack for a hand truck. 212,082, 8-27-68, Cl. D14—3.
SOSS Mfg. Co.: *See*—
Feldman, Raymond J. 212,124.
Sakow, Toshihiko, to Baker Brush Co., Inc. Paint roller or the like. 212,131, 8-27-68, Cl. D64—18.
Salsgiver, John P., to United Technical Corp. Portable laboratory utility cart. 212,088, 8-27-68, Cl. D16—2.
Schmued, Edgar. Combined drafting table and storage cabinet. 212,100, 8-27-68, Cl. D33—14.
Scovill Mfg. Co.: *See*—
Leong, Henry, and Witte. 212,147.
Shimizu, Patrick K. Chair. 212,084, 8-27-68, Cl. D15—1.
Sierra Electric Inc.: *See*—
Gaines, Jack H. 212,094.
Smith, Thomas R., to The Maytag Co. Waste disposer housing. 212,127, 8-27-68, Cl. D55—1.
Spot Heaters, Inc.: *See*—
Flood, Thomas W., Stamschror, and Tanasse. 212,092.
Stamschror, Henry A.: *See*—
Flood, Thomas W., Stamschror, and Tanasse. 212,092.
Stephenson, Franklynn M. Flower tray. 12,107, 8-27-68, Cl. D35—3.
Stran-Steel Corp.: *See*—
Vondergoltz, George E. 212,080.
Swimrite Mfg. Co., Inc.: *See*—
Edmiston, James R. 212,090.
Tanasse, Arthur E.: *See*—
Flood, Thomas W., Stamschror, and Tanasse. 212,092.
Taylor, William D., to Rubbermaid Inc. Rotary stand for sewing accessories. 212,071, 8-27-68, Cl. D3—19.
Taylor, William D., to Rubbermaid Inc. Rotatable canister unit. 212,109, 8-27-68, Cl. D44—6.
Taylor, William D., to Rubbermaid Inc. Rack for utensil lids or the like. 212,116, 8-27-68, Cl. D44—29.
Tomchin, Ronald E. Broach or similar article. 212,118, 8-27-68, Cl. D45—19.
Torr Laboratories, Inc.: *See*—
De Lucia, Victor E. 212,144.
Tuthill, John B., and W. A. Claunch, to American Dish Service of Kansas City, Missouri, Inc. Rotatable water manifold for dish washing machines. 212,121, 8-27-68, Cl. 49—1.
United Technical Corp.: *See*—
Salsgiver, John P. 212,088.
Universal Hygienic Equipment Ltd.: *See*—
Lewis, Harvey. 212,122.
Voit, W. J., Rubber Corp.: *See*—
Myers, Dean W. 212,103.
Vondergoltz, George E., to Stran-Steel Corp. Building trim and gutter structure. 212,080, 8-27-68, Cl. D13—1.
Watson, Robert E. Roll paper dispenser. 212,101, 8-27-68, Cl. D33—31.
Weitzman, Mark R., to Corning Glass Works. Plate or similar article. 212,112, 8-27-68, Cl. D44—15.
Wharmby, Charles A., Jr. Decorative Christmas tree base. 212,106, 8-27-68, Cl. D35—3.
White, Winsor D., Jr., to D. H. Baldwin Co. Organ console. 212,128, 8-27-68, Cl. D56—2.
Wiggins, William H. Cooking device. 212,137, 8-27-68, Cl. D81—10.
Witte, Paul A.: *See*—
Leong, Henry, and Witte. 212,147.
Woodruff, William W., and V. E. Rhinehart, to Cumberland Corp. Carrying case for bottles or the like. 212,074, 8-27-68, Cl. D9—177.
Yang, Peter Q.: *See*—
Rixford, Richard E., and Yang. 212,130.
Zaretsky, Melvin. Cup holder. 212,111, 8-27-68, Cl. D44—10.

LIST OF PATENTEES

TO WHOM

PATENTS WERE ISSUED ON THE 27TH DAY OF AUGUST, 1968

NOTE.—Arranged in accordance with the first significant character or word of the name (in accordance with city and telephone directory practice).

AMP, Inc.: *See*—
Pauza, William V., and Kunkle. 3,399,374.
Aas, Herbert G., and R. K. Erf, to United Aircraft Corp. Ultrasonic scanning cell. 3,399,013, 8-27-68, Cl. 350—161.
Abdo, Milton K., to Mobil Oil Corp. Liquid flow in a permeable earth formation. 3,398,792, 8-27-68, Cl. 166—9.
Abel, Jack. Brassiere having adjustable cup construction. 3,398,748, 8-27-68, Cl. 128—465.
Abela, Michael F. Spinning projectile. 3,398,682, 8-27-68, Cl. 102—38.
Abell, John H.: *See*—
Montgomery, Rayner A., Kilmer, and Abell. 3,398,571.
Abramson, Daniel J. Surgical needle holder. 3,398,746, 8-27-68, Cl. 128—340.
Achenbach Sohne G.m.b.H.: *See*—
Barten, Ernst H. 3,398,564.
Acosta, Salvador J., to W. A. Call Mfg. Inc. Roof ventilator with U-shaped flue cap. 3,398,671, 8-27-68, Cl. 98—60.
Acum, Jesse: *See*—
Brocklebank, Norman, Richardson, and Acum. 3,398,967.
Adachi, Naoyoshi, and Y. Murono, to Asahi Kasei Kogyo Kabushiki Kaisha. Method of producing crimped fibrous material. 3,398,441, 8-27-68, Cl. 28—72.
Adam, Vaclav, to Vyzkumny a zkusebni letechky ustav. Apparatus for forming, hardening and applying layers of malleable material upon planar and profiled surfaces. 3,398,562, 8-27-68, Cl. 72—215.
Adams, Edward R., to Commercial Filters Corp. Impregnated self-supporting honeycombed filter cartridge. 3,398,837, 8-27-68, Cl. 210—496.
Adams, Edward R., and J. L. Shepherd, to Commercial Filters Corp. Filter cartridge winding apparatus. 3,398,904, 8-27-68, Cl. 242—18.
Adams, Edward R., J. L. Shepherd, and J. V. Placitelli, to Commercial Filters Corp. Apparatus for making filter tubes. 3,398,905, 8-27-68, Cl. 242—35.5.
Adams, Edward R., and J. L. Shepherd, to Commercial Filters Corp. Process of making impregnated filter tubes. 3,399,092, 8-27-68, Cl. 156—74.
Admiral Corp.: *See*—
Wolff, Robert A. 3,399,276.
Aerojet-General Corp.: *See*—
Frankel, Milton B. 3,399,235.
Frankel, Milton B. 3,399,240.
Gold, Marvin H., and Marcus. 3,399,232.
Grakauskas, Vytautas. 3,399,179.
Lamb, Bernard L., and Gross. 3,398,738.
Marks, Murray, and Ferrara. 3,398,833.
Nuttall, Fleet E., and Cantor. 3,398,834.
Sciglıano, Joseph J. 3,399,087.
Whitaker, William D. 3,399,001.
Zernow, Louis, and Edberg. 3,398,561.
Affiliated Hospital Products, Inc.: *See*—
Douglass, John. 3,398,411.
Agfa-Gevaert Aktiengesellschaft: *See*—
Kiper, Gerd. 3,398,667.
Paulus, Rudolf. 3,399,304.
Ainsworth, Richard, and W. J. Stein, to Avco Corp. Method of operating a transmission for track-laying vehicles. 3,398,605, 8-27-68, Cl. 74—720.5.
Air Products and Chemicals, Inc.: *See*—
Farkas, Adalbert. 3,399,182.
Kleinberg, Sidney, and Tompkins. 3,399,036.
Airborne Mfg. Co.: *See*—
Kaatz, Herbert W., and Tobacman. 3,398,884.
Ajero, Fortunato S., to Koehring Co. Motor vehicle with laterally adjustable cab. 3,398,984, 8-27-68, Cl. 296—1.
Akamatsu, Yasuka: *See*—
Furui, Shungo. 3,399,327.
Aktiebolaget Astra: *See*—
Bamberg, Peter, Ekstrom, and Sjoberg. 3,399,207.
Aktiebolaget Bahco: *See*—
Gustavsson, Karl A. G. 3,398,511.
Aktiebolaget Gylling & Co.: *See*—
Johansson, Carl-Gustav S. 3,398,731.
Aktiebolaget Motala Verkstad: *See*—
Carlsson, Bengt, and Hedin. 3,398,844.
Aktiebolaget Stille-Werner: *See*—
Tjerneld, Stig, and Hook. 3,398,745.
Aktiebolaget Svenska Flaktfabriken: *See*—
Wallin, Sven. 3,398,880.
Albemarle Paper Co.: *See*—
Gottwald, Bruce C., and Haigh. 3,399,074.
Al-Craft Mfg. Co.: *See*—
Campbell, Andrew J., and Haydu. 3,398,590.
Alen, Benjamin F., and L. C. Fridd, to Bausch & Lomb, Inc. Holding device for cylindrical objects. 3,398,828, 8-27-68, Cl. 206—72.
Alesi, John A.: *See*—
Aleisi, John, Jr., and J. A. Alesi. 3,398,434.
Alesi, John, Jr., and J. A. Alesi, to Formex Mfg. Inc. Vacuum forming apparatus. 3,398,434, 8-27-68, Cl. 18—19.
Alexander, Edwin W. Bed traction unit. 3,398,742, 8-27-68, Cl. 128—75.
Alio, Peter. Container and dispenser with trap means. 3,398,857, 8-27-68, Cl. 221—190.
Allington, Robert W., to Instrumentation Specialties Co. Apparatus providing a constant-rate two-component flow stream. 3,398,689, 8-27-68, Cl. 103—11.
Ambe, Michio, to Ibigawa Electric Industry Co., Ltd. Carbon rod assemblies for arc gouging of steel. 3,399,322, 8-27-68, Cl. 313—357.
American Bosch Arma Corp.: *See*—
Claffey, Frank J. 3,398,895.
American Cyanamid Co.: *See*—
Cabasso, Victor J. 3,399,113.
Harris, Seth O., and Ball. 3,399,079.
Horton, Robert L. 3,399,169.
Michael, Malden W., and Debaun. 3,399,148.
Rauhut, Michael M., and Bollyky. 3,399,137.
Savides, Christos, and Milks. 3,399,178.
Scanley, Clyde S. 3,399,146.
Skoggard, Bruno B., and Post. 3,399,094.
Strazdins, Edward, and Webb. 3,399,263.
Zweig, Arnold. 3,399,328.
American Machine & Foundry Co.: *See*—
Behr, Walter W. 3,398,702.
Chambers, Jerome B., and Dinney. 3,398,750.
Hollenton, Frank. 3,398,823.
Horton, John L. 3,398,543.
Williamson, William R. 3,399,118.
American Maize-Products Co.: *See*—
Hay, Julian A. 3,399,200.
American Optical Corp.: *See*—
Hicks, John W., Jr. 3,398,669.
American Photocopy Equipment Co.: *See*—
Fischer, Frederick W., and Cooper. 3,399,140.
American Radiator & Standard Sanitary Corp.: *See*—
Kosarin, Basil A. 3,398,940.
Ampex Corp.: *See*—
MacLeod, Donald B. 3,399,334.
Amsted Industries Inc.: *See*—
Baker, Arthur F. 3,398,700.
Anderson Bros. Mfg. Co.: *See*—
Jacobson, William P. 3,398,877.
Ward, Frank A. 3,398,876.
Anderson, Charles E.: *See*—
Carter, John W., Landen, Miller, and Anderson. 3,399,378.
Anderson Electric Corp.: *See*—
Peek, Vernon E. 3,399,375.
Anderson, Robert V. Combination heating and cooling unit. 3,398,785, 8-27-68, Cl. 165—29.
Andrea, John J., to Collins Radio Co. Frequency divider employing inductive switching. 3,399,311, 8-27-68, Cl. 307—225.
Anggulst, Torsten F., to Crescent Niagara Corp. Spring opened nipper. 3,398,451, 8-27-68, Cl. 30—186.
Aninger, John H. Method and equipment for packing. 3,398,501, 8-27-68, Cl. 53—35.
Ansingh, Carl H., to P. L. Robertson Mfg. Co., Ltd. Self-tapping screw. 3,398,625, 8-27-68, Cl. 85—46.
Anstalt fur Patentdienst: *See*—
Fleissner, Gerold. 3,398,464.
Anzac Electronics, Inc.: *See*—
Podelim, Allen F. 3,399,340.
Apfelbaum, Jerome G., to Faultsensors, Inc. High water alarm for drainage sump. 3,399,399, 8-27-68, Cl. 340—244.
Apotheloz, Robert, to Oerlikon-Buhrle Holding Ltd. Holding device for a rocket in a launcher tube. 3,398,639, 8-27-68, Cl. 89—1.806.
Apotheloz, Robert, H. Schenk, and A. Gelbert, to Oerlikon-Buhrle Holding Ltd. Rocket launcher device. 3,398,640, 8-27-68, Cl. 89—1.813.
Aremaa, Toivo E. Method for precipitation or washing of materials containing cellulose. 3,398,412, 8-27-68, Cl. 8—156.
Argabright, Perry A., and V. J. Sinkey, to Marathon Oil Co. Process for the preparation of 2-aryl-1,1,3,3-tetraalkyl guanidines. 3,399,233, 8-27-68, Cl. 260—565.
Ariewitz, Daniel, to Chicago Blower Corp. Fan. 3,398,883, 8-27-68, Cl. 230—134.
Arizona Chemical Co.: *See*—
Savides, Christos, and Milks. 3,339,178.
Arko, Robert E., to Teletype Corp. Positive detenting ratchet. 3,398,591, 8-27-68, Cl. 74—142.
Armour and Co.: *See*—
Schwall, Donald V., Rogers, and Corbin. 3,399,063.
Armstrong, Philip N. Sorting system for multiple bit binary records. 3,399,383, 8-27-68, Cl. 340—172.5.
Aro Corp., The: *See*—
Clark, Melvin D. 3,398,802.

Arzul, Guy: See—
Burgert, Albert, and Arzul. 3,399,338.
Asahi Kasei Kogyo Kabushiki Kaisha: See—
Adachi, Naoyoshi, and Murono. 3,398,441.
Ichikawa, Yasushi, Inai, Shirode, and Ohfuka. 3,399,161.
Nakayama, Chozo, Kaku, and Kanai. 3,399,261.
Ohsawa, Takeyoshi, Shibukawa, and Takahashi. 3,399,114.
Ash, Roy C., to International Harvester Co. Topping mechanisms for cane harvesters. 3,398,515, 8–27–68, Cl. 56—63.
Ashbrook, Allan W.: See—
Ritcey, Gordon M., and Ashbrook. 3,399,055.
Asmus, Rodger W.: See—
Swanson, William C., Moyer, and Asmus. 3,398,531.
Associated Consultants, Inc.: See—
Bascle, Joseph A., Jr. 3,398,938.
Astrodata, Inc.: See—
Dalton, Edward K. 3,399,352.
Athletic Devices, Inc.: See—
Nedwick, Zygmund. 3,398,954.
Atkinson, James L., to North American Rockwell Corp. Electrostatic support system. 3,399,002, 8–27–68, Cl. 308—10.
Atlantic Richfield Co.: See—
Wakefield, Charles E., Jr. 3,398,790.
Atwell, William H., and D. R. Weyenberg, to Dow Corning Corp. Thermal redistribution of alkoxymethylpolysilanes and products thereof. 3,399,223, 8–27–68, Cl. 260—448.8.
Aubertin, Charles, J. Lefebvre, G. Galaud, and J. Prospert, to Commissariat a l'Energie Atomique. Process for separating strontium from fission product solution by fixing on antimonic acid. 3,399,030, 8–27–68, Cl. 23—102.
Ault, Cyrus F., to Bell Telephone Laboratories, Inc. Transistor amplifier with class AB biasing circuit. 3,399,355, 8–27–68, Cl. 330—15.
Aurora Corp.: See—
Fleer, Thomas P. 3,398,890.
Autoclave Engineers, Inc.: See—
Gasche, Fred. 3,398,978.
Automobiles M. Berliet, & Hydomecanique et Frottement: See—
Caubet, Jacques J. 3,398,443.
Avco Corp.: See—
Ainsworth, Richard, and Stein. 3,398,605.
Avins, Jack, to Radio Corp. of America. FM counter-type detector especially suited for integrated circuit fabrication. 3,399,353, 8–27–68, Cl. 329—126.
Avisun Corp.: See—
Bell, Gordon W., Jr. 3,399,156.
Aziende Colori Nazionali Affini ACNA S.p.A.: See—
Mangini, Angelo, Mazzanti, and Tundo. 3,399,194.
Azuma, Keiichi, K. Shikata, and K. Yokokawa, to Tokuyama Soda Kabushiki Kaisha. Process for producing high polymers of alphaolefins and catalyst compositions therefor. 3,399,184, 8–27–68, Cl. 260—93.7.
Babcock, Henry N. Building construction and method. 3,398,491, 8–27–68, Cl. 52—90.
Bacon, R. S., Veneer Co.: See—
Huff, Alvin. 3,398,770.
Baenziger, Robert C.: See—
Ma, John Y., Baenziger, and Hsiao. 3,399,362.
Baer, Massimo, and E. H. Hankey, to Monsanto Co. Blends of rigid vinyl chloride polymers and nonpolar elastomers. 3,399,155, 8–27–68, Cl. 260—23.
Bailey, Frank W., to Operation Oil Heat Associates, Inc. Annular burner apparatus providing blue-flame combustion of domestic fuel oil. 3,399,022, 8–27–68, Cl. 431—116.
Baker, Arthur F., to Amsted Industries Inc. Railway truck with flexibly jointed and rigidly mounted transoms. 3,398,700, 8–27–68, Cl. 105—182.
Baker Oil Tools, Inc.: See—
Fisher, Hiram H., Jr., Myers, and Chenoweth. 3,398,796.
Leutwyler, Kurt, and Henslee. 3,398,803.
Balas Collet Co.: See—
Cox, John R. 3,398,965.
Baldus, Wolfgang, to Gesellschaft fur Linde Eismaschinen Aktiengesellschaft. Purification of gases. 3,398,506, 8–27–68, Cl. 55—23.
Ball, Charles A.: See—
Harris, Seth O., and Ball. 3,399,079.
Ball, George L., III: See—
Salyer, Ival O., and Ball. 3,399,103.
Ball, George L., III, and I. O. Salyer, to Monsanto Research Corp. Vibration damping composition and laminated construction. 3,399,104, 8–27–68, Cl. 161—68.
Ballenger, William G., and R. G. Schaefer, to Central Specialties Co. Snap-on hanger. 3,398,839, 8–27–68, Cl. 211—13.
Balogh, Lorant, V. Denk, E. Klinkhardt, and E. Sanger, to Firma Aviatest G.m.b.H. Method of producing hypersonic fluid flow. 3,398,507, 8–27–68, Cl. 55—55.
Balon Corp.: See—
Scaramucci, Domer. 3,398,925.
Scaramucci, Domer. 3,398,926.
Balsley, Dean A.: See—
Farrell, Ronald J., Lannert, and Balsley. 3,399,008.
Baltus, George T., and R. Warmuz, to Bell Aerospace Corp. Lead signal generation apparatus for use in control systems. 3,398,646, 8–27–68, Cl. 91—217.
Baltus, George T., and R. Warmuz, to Bell Aerospace Corp. Servo control system utilizing load pressure feedback apparatus. 3,398,647, 8–27–68, Cl. 91—384.
Bamberg, Peter, B. A. Ekstrom, and B. O. H. Sjoberg, to Aktiebolaget Astra. Esters of 6-aminopenicillanic acid. 3,399,207, 8–27–68, Cl. 260—306.7.
Banas, Conrad M., T. L. Churchill, and D. E. Powers, to United Aircraft Corp. Vacuum pressure measurement apparatus utilizing hollow cathode discharge. 3,399,341, 8–27–68, Cl. 324—33.
Bang, Carlo A. M., to Seiichi Inouye. Developing and application methods of ceramic coating. 3,399,078, 8–27–68, Cl. 117—129.
Banner Metals, Inc.: See—
Wilson, James D. 3,398,840.
Barber, Alfred W., to Forbro Design Corp. Electrical coil with a top changing means. 3,399,364, 8–27–68, Cl. 336—107.
Barber, Roy H., to Hardwick Stove Co. Removable oven door and hinge assembly. 3,398,735, 8–27–68, Cl. 126—191.
Barg, Dora A. Brassiere. 3,398,749, 8–27–68, Cl. 128—513.
Baringer, Berlyn E.: See—
Huber, John A., and Baringer. 3,398,589.
Barker, Ray C. Portable stove structure. 3,398,732, 8–27–68, Cl. 126—9.
Barkrauss Enterprises Ltd.: See—
Krauss, Paul. 3,398,498.
Barnhill, George T., III: See—
Flook, William M., Jr., and Barnhill. 3,398,825.
Barrosse, Jerrold P., to Sperry Rand Corp. Holding circuit for servo mechanism. 3,399,391, 8–27–68, Cl. 340—174.1.
Barry, Robert M., and A. J. Reilling, to Multi-Clean Products, Inc. Rotary brush for carpet scrubbing machine. 3,398,422, 8–27–68, Cl. 15—180.
Barsom, John M.: See—
Curtze, Edward W., Wehner, and Barsom. 3,398,868.
Barten, Ernst H., to Achenbach Sohne G.m.b.H. Arrangement for counter-balancing the working rollers of a roller stand. 3,398,564, 8–27–68, Cl. 72—243.
Bartik, William J., W. F. Chow, J. B. Schwarz, and J. V. Murphy, to Sperry Rand Corp. Parametric circuits. 3,399,309, 8–27–68, Cl. 307—88.
Barton, Thomas C.: See—
Reece, James J., and Barton. 3,399,006.
Bascle, Joseph A., Jr., to Associated Consultants, Inc. Carburetor and inlet manifolds for internal combustion engines. 3,398,938, 8–27–68, Cl. 261—46.
Batten, Ronald W., to Hi-Shear Corp. Drivers for setting fasteners. 3,398,612, 8–27–68, Cl. 81—54.
Battig, Paul, to Cutter Laboratories, Inc. Metering devices for liquids. 3,398,860, 8–27–68, Cl. 222—46.
Baueh, Earl J.: See—
Lents, Charles M. 3,398,550.
Bausch & Lomb, Inc.: See—
Alen, Benjamin F., and Fridd. 3,398,828.
Butterfield, John V., and Rosenberger. 3,399,014.
Dakin, Ralph K. 3,398,630.
Esmay, Edward N., Jackson, and Stevens. 3,398,637.
Jacobs, Robert D. 3,399,015.
Judd, Duane E. 3,399,017.
Livesey, Donald V., and Snow. 3,398,935.
Martens, Alexander E. 3,399,347.
McGivern, Robert F., and Shone. 3,398,631.
Rand, Royden N., and Mueller. 3,399,127.
Young, Ralph B. 3,399,016.
Beaumont, Ralph H., D. R. Christie, J. Okrepkie, and D. B. Wicker, to Huyck Corp. Supplemental belt in combination with an endless belt in papermaking and method of installing the supplemental belt. 3,399,111, 8–27–68, Cl. 162—199.
Becker, Earl M., A. C. McInnes, and H. Heller, to Mine Safety Appliances Co. Combustible gas monitoring system. 3,399,398, 8–27–68, Cl. 340—237.
Beckman Instruments, Inc.: See—
Taylor, John. 3,399,308.
Beevers, Vincent A.: See—
Ragan, Billie J., and Beevers. 3,398,846.
Behr, Walter W., to American Machine & Foundry Co. Extruding apparatus. 3,398,702, 8–27–68, Cl. 107—15.
Bell Aerospace Corp.: See—
Baltus, George T., and Warmuz. 3,398,646.
Baltus, George T., and Warmuz. 3,398,647.
Bell & Howell Co.: See—
John, Robert S., Jr., and Maxon. 3,398,665.
Levin, Herman. 3,399,307.
Bell, Charles C., and K. W. Niederer, to Leesona Corp. Textile machine. 3,398,521, 8–27–68, Cl. 57—53.
Bell, Charles C., to Leesona Corp. Yarn finding device. 3,398,906, 8–27–68, Cl. 242—35.6.
Bell, George R., to Johns-Manville Corp. Removal of bacteria from aqueous liquids by filtration. 3,399,136, 8–27–68, Cl. 210—50.
Bell, Gordon W., Jr., to Avisun Corp. Polypropylene having controlled slip. 3,399,156, 8–27–68, Cl. 260—29.1.
Bell Telephone Laboratories, Inc.: See—
Ault, Cyrus F. 3,399,355.
Haynie, Gerald D. 3,399,343.
Rinehart, James D. 3,399,358.
Belson, Henry S., to Sperry Rand Corp. Variable delay line. 3,399,361, 8–27–68, Cl. 333—31.
Belzner, Paul: See—
Wetzel, Ludwig, and Belzner. 3,398,644.
Bendix Corp., The: See—
Gress, Albert V., Jr. 3,398,598.
Prapis, Frank, and Cacioppo. 3,399,335.
Benenati, Salvatore. Fingerprint control system. 3,398,558, 8–27–68, Cl. 70—277.
Bennett, James F., to International Harvester Co. Locking pin. 3,398,800, 8–27–68, Cl. 172—753.
Benson, Warren E., Jr., to Kingsbury Technology Inc. Capacitor test cell, incorporated in a conveyor bed for conveying large bulky heavy individual pieces, for the capacitive measurement of moisture in said pieces while supported on said bed. 3,399,344, 8–27–68, Cl. 324—61.
Berger, Irving M. Vehicle drive. 3,398,807, 8–27–68, Cl. 180—64.
Berger, Morris M., I. L. Blumenfeld, and M. A. Torbin, to Deco Coatings Corp. Resin base coating compositions and method of using the same. 3,399,165, 8–27–68, Cl. 260—41.

Bergstrom, Karl E. L. Hose clamp. 3,398,440, 8–27–68, Cl. 24—274.
Berk, Sigmund, to United States of America, Army. Radioactive metal corrosion evaluater and methods therefor. 3,399,303, 8–27–68, Cl. 250—83.3.
Bernetti, Raffaele, C. H. Staff, and S. A. Watson, to Corn Products Co. Process for preparing pregelatinized starches. 3,399,081, 8–27–68, Cl. 127—71.
Bernstein, Carl, and K. Longley, to Witco Chemical Co., Inc. Rigid polyurethane foams and polyesters for use therein. 3,399,154, 8–27–68, Cl. 260—22.
Berquin, Yves: See—
Quanquin, Bernard, and Berquin. 3,398,458.
Berthold, Robert V.: See—
Herrett, Richard A., and Berthold. 3,399,048.
Herrett, Richard, and Berthold. 3,399,228.
Bertoglio, Guido. Filling and closing apparatus for bags of thermoplastic material. 3,398,503, 8–27–68, Cl. 53—187.
Bertoni, Giuseppe C., and G. Moretti, to Montecatini Edison S.p.A. Process for preparing alkyl aluminum halides. 3,399,221, 8–27–68, Cl. 260—448.
Best, Willie H., C. L. Thompson, Jr., and E. C. Woodward, Jr., to Lear Siegler, Inc. Clothes dryer control. 3,398,459, 8–27–68, Cl. 34—43.
Bettis, Alfred, to Clarke, Chapman & Co., Ltd. Operation of dog-clutches for cable lifters. 3,398,820, 8–27–68, Cl. 192—35.
Bevevino, James W., to Struthers Wells Corp. Expansion and contraction means for a heat exchanger. 3,398,787, 8–27–68, Cl. 165—81.
Bevis, Burton L., to Caterpillar Tractor Co. Ejection mechanism for molding apparatus. 3,398,781, 8–27–68, Cl. 164—228.
Biedermann, Walter: See—
Siegrist, Gerald, and Biedermann. 3,399,027.
Bierman, Eric, R. Gagnier, and R. Kenedi, to Northern Electric Co. Ltd. Number translator. 3,399,279, 8–27–68, Cl. 179—18.
Binns, Jack N.: See—
Clutter, Carl E. 3,398,595.
Biochemie Gesellschaft mit beschrankter Haftung: See—
Frank, Albert, Kraushaar, Margreiter, and Schunk. 3,399,204.
Biskup, John, and N. R. Migdol, to Congoleum-Nairn Inc. Cellular foam composition and process for its preparation. 3,399,107, 8–27–68, Cl. 161—160.
Black Sivalls & Bryson, Inc.: See—
Smalling, Charles E. 3,398,723.
Blaschke, Franz, and G. Schade, to Chemische Werke Witten G.m.b.H. Process for the preparation of linear thermoplastic polyesters with freezing temperatures above 100° C. 3,399,170, 8–27–68, Cl. 260—47.
Block Engineering, Inc.: See—
Young, Niels O. 3,398,949.
Blood, Raymond: See—
Start, Ernest, and Blood. 3,398,554.
Bloomer, William J., to Owens-Illinois, Inc. Closure cap inspecting apparatus. 3,398,574, 8–27–68, Cl. 73—52.
Blumenfeld, Irving L.: See—
Berger, Morris M., Blumenfeld, and Torbin. 3,399,165.
Board of Trustees: See—
Hansen, Clarence M., and Ott. 3,398,542.
Bobo, Donald E., to Union Carbide Corp. Barium powder getter production method. 3,399,052, 8–27–68, Cl. 75—.5.
Bobst, J., and Son S.A.: See—
Grivet, Francis. 3,398,679.
Boeing Co., The: See—
Lancashire, Thomas, and Cunliffe. 3,398,934.
Mack, John C. 3,399,370.
Mosinskis, Victor S., and Grina. 3,398,797.
Boenig, Herman V., R. A. Clark, and K. J. Gregory, to Brunswick Corp. Curing nitrile with sulfur and metal halides. 3,399,176, 8–27–68, Cl. 260—83.3.
Bogner, Hans, and F. Dobler. Device for removing lint from clothes. 3,398,418, 8–27–68, Cl. 15—105.
Bohannan, Billy J., to Borg-Warner Corp. Control system for air conditioners and the like. 3,398,889, 8–27–68, Cl. 236—1.
Bohannon, William D., Jr., to Western Electric Co., Inc. Magnetic memory matrices. 3,399,389, 8–27–68, Cl. 340—174.
Bohmel, Berthold, and J. Hornschu, to Carl Zeiss-Stiftung d.b.a. Carl Zeist Heidenheim. Focusing device. 3,399,010, Cl. 8–27–68, Cl. 350—47.
Boldridge, Austin G., Jr., to Metall Skin Process Corp. Heater pressure roller. 3,399,292, 8–27–68, Cl. 219—469.
Bollyky, Laszlo J.: See—
Rauhut, Michael M., and Bollyky. 3,399,137.
Bomar, Horace L.: See—
Chabot, Leo L., and Haagsma. 3,398,520.
Bonatsos, James, to Radio Broadcasting Co. Combined television and photographic machine. 3,398,664, 8–27–68, Cl. 95—14.
Borg-Warner Corp.: See—
Bohannan, Billy J. 3,398,889.
McMillen, Kenneth G. 3,398,649.
Prevallet, David N., and Stephens. 3,398,530.
Bornemann, Gary A., W. F. McIlhenny, and J. D. Gensler, to The Dow Chemical Co. Compounding and curing neoprene rubber. 3,399,181, 8–27–68, Cl. 260—92.3.
Borst, Gaylord M.: See—
Quiram, Ronald G., and Borst. 3,398,878.
Bos, Harmannus: See—
Evers, Johannes J. M., and Bos. 3,399,168.
Bosch, Robert, G.m.b.H.: See—
Hahner, Reinhard. 3,398,611.
Bossard, Werner: See—
Dürig, Rudolf, and Bossard. 3,399,187.
Boswell, Donald E., to Mobil Oil Corp. Catalytic synthesis of vinylaromatics with COS. 3,399,243, 8–27–68, Cl. 260—669.
Bosy, George: See—
Partyka, Anthony S., and Bosy. 3,399,064.
Boucher, Raymond M. G., to Macrosonics Corp. Metallurgical processing apparatus. 3,398,944, 8–27–68, Cl. 266—34.
Bowers, Clarence: See—
Hall, Russell S., Patten, and Bowers. 3,398,538.
Boynton, Kenneth G.: See—
Wegener, Howard W., and Boynton. 3,398,873.
Brack, Alfred, to Farbenfabriken Bayer Aktiengesellschaft. Benzindole cyanotrimethine basic dyestuffs. 3,299,191, 8–27–68, Cl. 260—240.6.
Brader, Walter H., Jr., to Jefferson Chemical Co., Inc. Purification of p-dioxenes by azeotropic distillation with water. 3,399,215, 8–27–68, Cl. 260—340.6.
Bradley, Carl R. Combination barbecue smoker leaf burner. 3,398,733, 8–27–68, Cl. 126—25.
Branson, Charles D., to Robertshaw Controls Co. Burner construction and the like. 3,399,024, 8–27–68, Cl. 431—286.
Brant, John W. A., and C. T. Hage; said Hage, assor. to said Brant. Apparatus for determining instantaneous acceleration of recurring bioregulatory events. 3,398,736, 8–27–68, Cl. 128—2.05.
Brany, Jaroslav, to Vyzkumny ustav strojirenske technologie a ekonomiky. Arrangement for the control of the movement of balls. 3,398,592, 8–27–68, Cl. 74—198.
Brass, Robert L., and A. Feiner. Operator-controlled rotatable spaceship model game. 3,398,950, 8–27–68, Cl. 273—1.
Brath, Peter W., R. A. Sarbach, and R. D. Smith, to Westinghouse Air Brake Co. Electrically controlled brake system for railway cars. 3,398,815, 8–27–68, Cl. 188—195.
Braun, Gunther: See—
Windemuth, Erwin, and Braun. 3,399,247.
Braun, Oscar, to Pebra G.m.b.H., Paul Braun. Composite molding. 3,398,921, 8–27–68, Cl. 248—345.1.
Braunwarth, John B., to Union Oil Co. of California. Polyacid production. 3,399,219, 8–27–68, Cl. 260—410.9.
Brayford, John R., to Imperial Chemical Industries, Ltd. Method for producing bicomponent polypropylene filaments. 3,399,259, 8–27–68, Cl. 264—168.
Breckenridge, Robert M.: See—
Fleischer, Kurt W., and Breckenridge. 3,399,117.
Breidt, Peter, Jr., and L. E. Lefevre, to The Dow Chemical Co. Unfoldable thermoplastic sheet. 3,399,105, 8–27–68, Cl. 161—102.
Bremmer, Bart J., to The Dow Chemical Co. Self-extinguishing epoxy resins. 3,399,174, 8–27–68, Cl. 260—47.
Brennan, Bernard E. Method of burning combustible scum. 3,398,705, 8–27–68, Cl. 110—8.
Brennan, William J., to The Budd Co. Method and apparatus for the manufacture of vulcanized fiber sheet materials. 3,399,093, 8–27–68, Cl. 156—76.
Breske, Harry A., and T. W. Hufsiger, to Uniroyal Inc. Trimming apparatus. 3,398,641, 8–27–68, Cl. 90—13.
Bressan, Ezio. Cushioned shoe innersole construction. 3,398,469, 8–27–68, Cl. 36—11.5.
Brewer, George E. F., and G. L. Burnside, to Ford Motor Co. Electrodeposition process and apparatus having a movable conduit electrode. 3,399,128, 8–27–68, Cl. 204—181.
Brichard, Edgard, to Glaverbel, S.A. Melting furnace for manufacturing flat glass. 3,399,047, 8–27–68, Cl. 65—346.
Bricout, Constant, to Les Applications Techniques Industrielles. Internal combustion engines of the type including a heat insulated combustion chamber. 3,398,726, 8–27–68, Cl. 123—32.
Bridgeford, Douglas J., to Tee-Pak, Inc. Spray dried polymeric alcohol xanthates. 3,399,069, 8–27–68, Cl. 106—164.
British Petroleum Co., The: See—
Forbes, Alan D., and Gould. 3,399,139.
Brocklebank, Norman, B. Richardson, and J. Acum, to Priestman Bros. Ltd. Levelling devices. 3,398,967, 8–27–68, Cl. 280—6.
Broich, Franz, and H. Grasemann, to Chemische Werke Huls Aktiengesellschaft. Process for the recovery of boric acid from the oxidation mixtures of liquid-phase oxidation of hydrocarbons. 3,399,035, 8–27–68, Cl. 23—149.
Bros Inc.: See—
Takata, Harry H., Tuggle, and Williamson. 3,398,662.
Broverman, Irwin: See—
Eichelman, George H., Jr., and Broverman. 3,399,084.
Brown, Barry S., to Sylvania Electric Products Inc. Television camera circuits. 3,399,324, 8–27–68, Cl. 315—20.
Brown, Boveri & Cie, Aktiengesellschaft: See—
Jenny, Ernst. 3,398,525.
Brown, Douglas: See—
Richardson, William H., and Brown. 3,399,057.
Brown, Ernest C., to Wolverine Corp. Slot apparatus for high velocity gas treatment of moving webs. 3,398,466, 8–27–68, Cl. 34—160.
Brown, Ernest C., to Wolverine Corp. Parallel tube gaseous jet apparatus with multisize tube bores. 3,398,467, 8–27–68, Cl. 34—233.
Brown, George N., to E. I. du Pont de Nemours and Co. Apparatus for separating adulterants during pneumatic conveying. 3,398,829, 8–27–68, Cl. 209—3.
Brown, George T., Jr., to National Cash Register Co. Luminescent display system. 3,399,402, 8–27–68, Cl. 340—324.
Brown, James R.: See—
Schouw, Arthur C., and Brown. 3,399,134.
Brown, William D., to Omsteel Industries, Inc. Trencher boom and auger mount. 3,398,471, 8–27–68, Cl. 37—86.
Bruder, Werner A.: See—
Schmitz, Christian, and Bruder. 3,398,529.
Brunson, Bruce W., to Werner Machinery Co. Heat exchange tunnel. 3,398,788, 8–27–68, Cl. 165—120.

Brunswick Corp.: *See*—
Boenig, Herman V., Clark, and Gregory. 3,399,176.
Conklin, Robert M., and Torresen. 3,398,952.
Sanzare, Charles P. 3,398,958.
Sanzare, Charles P. 3,398,959.
Budd Co., The: *See*—
Brennan, William J. 3,399,093.
Budde, Paul B., and H. Tolkmith, to The Dow Chemical Co. Phosphonamidothioate compound. 3,399,210, 8-27-68, Cl. 260—309.
Buehler, Robert J.: *See*—
Du Bois, Jule J., Glover, and Buehler. 3,399,116.
Bunson, Michael B., and T. W. Wilson, to United States Steel Corp. Control mechanism. 3,398,560, 8-27-68, Cl. 72—12.
Burg, Kenneth E., to Texas Instruments Inc. Seismic underwater detector system. 3,398,715, 8-27-68, Cl. 114—235.
Burgert, Albert, and G. Arzul, to Compagnie Generale d'Electricite. Low voltage protection for a regulated power supply. 3,399,338, 8-27-68, Cl. 323—9.
Burk, Melvin. Massaging machine. 3,398,741, 8-27-68, Cl. 128—57.
Burke, Oliver W., Jr. Silica pigment reinforced hydrocarbon rubber compounded stocks and vulcanizates thereof and processes for producing the same. 3,399,166, 8-27-68, Cl. 260—41.5.
Burnett, Frank, to Lear Siegler, Inc. Bearing units. 3,398,-998, 8-27-68, Cl. 308—3.
Burnside, Gilbert L.: *See*—
Brewer, George E. F., and Burnside. 3,399,128.
Burt, George H.: *See*—
Potter, Thomas C., and Burt. 3,398,675.
Butcher, Raymond A., and R. E. White, to R. & R. Research Ltd. Audience measuring system employing constant current loads. 3,399,271, 8-27-68, Cl. 178—6.
Butterfield, John V., and H. E. Rosenberger, to Bausch & Lomb, Inc. Zoom type lens system for microprojectors having constant brightness of image. 3,399,014, 8-27-68, Cl. 350—184.
CSF-Compagnie Generale de Telegraphie Sans Fil: *See*—
Girault, Pierre. 3,398,918.
Vasseur, Jean-Pierre. 3,399,273.
Cabasso, Victor J., to American Cyanamid Co. Propagation of ich virus in swine-lung tissue culture. 3,399,113, 8-27-68, Cl. 195—1.3.
Cabot Corp.: *See*—
Hardy, John F., and Jordan. 3,399,051.
Rubel, Peter A. 3,399,029.
Cacioppo, Charles P.: *See*—
Prapis, Frank, and Cacioppo. 3,399,335.
Cadiou, Jean G., to Societe Anonyme Andre Citroen. Roof assemblies. 3,398,486, 8-27-68, Cl. 49—209.
Calrattl, Anthony E., to W. Schafroth. Nailing machine. 3,398,-648, 8-27-68, Cl. 91—417.
Caldwell, John R., and R. Gilkey, to Eastman Kodak Co. Polyester films having a poly (alkylene oxide) glycol ether layer fused thereto and process for making same. 3,399,073, 8-27-68, Cl. 117—62.1.
Call, W. A., Mfg. Inc.: *See*—
Acosta, Salvador J. 3,398,671.
Campbell, Andrew J., and B. A. Haydu, to Al-Craft Mfg. Co. Side mount operator for awning type windows or the like. 3,398,590, 8-27-68, Cl. 74—89.14.
Campbell, Robert W., to Chevron Research Co. Preparation of thiodisuccinic acid values. 3,399,230, 8-27-68, Cl. 260—537.
Campbell, William B., and M. C. Hemsworth, to General Electric Co. Engine supporting structure. 3,398,535, 8-27-68, Cl. 60—226.
Canevari, Roger: *See*—
Regnier, Gilbert, Canevari, and Le Douarec. 3,399,192.
Canter, James A., to General Motors Corp. Speed control circuit for single phase alternating current induction motors. 3,399,333, 8-27-68, Cl. 318—227.
Cantor, Paul A.: *See*—
Nuttall, Fleet E., and Cantor. 3,398,834.
Capraro, Paul, and D. Panaccione; said Panaccione, assor. to said Capraro. Hygienic washstand. 3,398,408, 8-27-68, Cl. 4—7.
Card, Lewis, & Co., Inc.: *See*—
Card, Roy T. 3,398,708.
Card, Roy T., to Lewis Card & Co., Inc. Needle plate for tufting machine. 3,398,708, 8-27-68, Cl. 112—79.
Carel, Alfred B.: *See*—
Perkins, Gerald, Jr., and Carel. 3,398,512.
Carlos, James A. Combined scraper and brush cleaning tool. 3,398,419, 8-27-68, Cl. 15—111.
Carlsson, Bengt, and B. Hedin, to Aktiebolaget Motala Verkstad. Feeding and discharging arrangement for multilayer presses. 3,398,844, 8-27-68, Cl. 214—16.6.
Carniol, Bohdan, and R. Styblo, to Tesla, narodin podnik. Circuit arrangement for temperature measurement. 3,398,579, 8-27-68, Cl. 73—342.
Caropreso, Frank E., K. J. Radimer, and B. J. Hogya, to FMC Corp. Process of etching metal with ammonium persulfate with recovery and recycling. 3,399,090, 8-27-68, Cl. 156—19.
Carrell, Terry E., to North American Rockwell Corp. Gamma radiation sensor and detection system. 3,399,302, 8-27-68, Cl. 250—71.5.
Carrier Corp.: *See*—
Yannascoli, Donald. 3,398,551.
Carroll, Cornelius F., Jr. One-piece arrowhead with cutting blades. 3,398,960, 8-27-68, Cl. 273—106.5.
Carter, John W., E. W. Landen, R. G. Miller, and C. E. Anderson, deceased (by R. C. Strodel, administrator), to Caterpillar Tractor Co. System for signalling between earthmoving vehicles. 3,399,378, 8-27-68, Cl. 340—34.
Case, J. I., Co.: *See*—
Venable, Phillip G. 3,398,674.
Cassella Farbwerke Mainkur Aktiengesellschaft: *See*—
Kunze, Wilhelm, Von Brachel, and Gattner. 3,399,229.
Stachel, Adolf, Nitz, Resag, and Kreiskott. 3,399,195.
Caterpillar Tractor Co.: *See*—
Bevis, Burton L. 3,398,781.
Carter, John W., Landen, Miller, and Anderson. 3,399,-378.
Cattermole, Kenneth W.: *See*—
Reeves, Alec H., Cattermole, and Kitajewski. 3,399,403.
Caubet, Jacques J., to Automobiles M. Berliet, & Hydromecanique et Frottement. Method of manufacturing an assembly of friction elements. 3,398,443, 8-27-68, Cl. 29—149.5.
Central Specialties Co.: *See*—
Ballenger, William G., and Schaefer. 3,398,839.
Ceskoslovenska akademie ved: *See*—
Figar, Stepan. 3,398,740.
Chabot, Leo L., and H. Haagsma, to J. D. Marshall, and H. L. Bomar, as trustees of the Carolina Patent Development Trust. Bobbin donning mechanism. 3,398,520, 8-27-68, Cl. 57—53.
Chalfant, Edward J., and H. H. Frank, to Emerson Electric Co. Self-tightening chuck. 3,398,966, 8-27-68, Cl. 279—116.
Challenger, Kenneth D., and J. H. McBrien, to Helmerich & Payne, Inc. Tank seal with finger. 3,398,851, 8-27-68, Cl. 220—26.
Chambers, Jerome B., and D. D. Dinney, to American Machine & Foundry Co. Article treating and conveying system. 3,398,750, 8-27-68, Cl. 131—25.
Chana, Howard E., to General Motors Corp. Transmission. 3,398,607, 8-27-68, Cl. 74—864.
Chang, David, to International Business Machines Corp. Two-probe three-gap flux sensitive magnetic head. 3,399,-393, 8-27-68, Cl. 340—174.1.
Chaustowich, Gabriel A., to Kem Krest Products Co. Thermostatically controlled electric immersion heater units. 3,399,295, 8-27-68, Cl. 219—523.
Chemische Werke Huls Aktiengesellschaft: *See*—
Broich, Franz, and Grasemann. 3,399,035.
Chemische Werke Witten G.m.b.H.: *See*—
Blaschke, Franz, and Schade. 3,399,170.
Chenoweth, David V.: *See*—
Fisher, Hiram H., Jr., Myers, and Chenoweth. 3,398,796.
Chevron Research Co.: *See*—
Campbell, Robert W. 3,399,230.
Mulaskey, Bernard F. 3,399,132.
Chicago Blower Corp.: *See*—
Arlewitz, Daniel. 3,398,883.
Chimiotex S.A.: *See*—
Colombu, Eugene, Rufer, and Zumstein. 3,398,688.
Chow, Woo F.: *See*—
Bartik, William J., Chow, Schwarz, and Murphy. 3,339,-309.
Christensen Diamond Products Co.: *See*—
Christensen, Frank L. 3,398,989.
Christensen, Frank L., to Christensen Diamond Products Co. Diamond milling or planer cutters. 3,398,989, 8-27-68, Cl. 299—39.
Christian, Charles M., and R. B. Kruse, to Thiokol Chemical Corp. Room temperature cured solid propellant. 3,399,088, 8-27-68, Cl. 149—19.
Christie, Donald R.: *See*—
Beaumont, Ralph H., Christie, Okrepkie, and Wicker. 3,399,111.
Chrysler Corp.: *See*—
Leising, Maurice B., and Lenosky. 3,398,524.
Chu, Chin-Chiun: *See*—
Foster, Harold M., Napier, and Chu. 3,399,216.
Chung, Jackson, to The Reliance Electric and Engineering Co. Speed reducer. 3,398,597, 8-27-68, Cl. 74—421.
Chupp, John P., to Monsanto Co. N-(1-alken-1-yl) ureas and process for preparing. 3,399,231, 8-27-68, Cl. 260—553.
Churchill, Thomas L.: *See*—
Banas, Conrad M., Churchill, and Powers. 3,399,341.
Ciba Corp.: *See*—
Druey, Jean, and Schmidt. 3,399,196.
Schmidt, Paul, Wilhelm, and Eichenberger. 3,399,201.
Wettstein, Walter. 3,399,218.
Claffey, Frank J., to American Bosch Arma Corp. Cooled fuel injection nozzle. 3,398,895, 8-27-68, Cl. 239—132.3.
Clancy, David, to Colgate-Palmolive Co. Narrow fold moist towelette package. 3,398,826, 8-27-68, Cl. 206—46.
Clancy, John J., to Arthur D. Little, Inc. Electrophotographic product and method for achieving electrophotographic copying. 3,399,060, 8-27-68, Cl. 96—1.4.
Clark, Melvin D., to The Aro Corp. Fluid operated drill. 3,398,802, 8-27-68, Cl. 173—169.
Clark, Richard A.: *See*—
Boenig, Herman V., Clark, and Gregory. 3,399,176.
Clark, Robert L.: *See*—
Patchett, Arthur A., Rogers, and Clark. 3,399,202.
Patchett, Arthur A., Clark, and Rogers. 3,399,203.
Clark, William T., III. Locally audible sound system. 3,398,-810, 8-27-68, Cl. 181—.5.
Clarke, Chapman, & Co., Ltd.: *See*—
Bettis, Alfred. 3,398,820.
Clarke, Ray A., and D. M. Griffin, Jr., to E. I. du Pont de Nemours and Co. Yellow disazo dyes. 3,399,188, 8-27-68, Cl. 260—152.
Clawson, Melvin J.: *See*—
Hooper, Edwin A. 3,398,744.
Cleary, James S., to Toogood & Jones Ltd. Method of and apparatus for cutting jigsaw puzzles. 3,398,614, 8-27-68, Cl. 83—32.
Cleary, Robert E. Flow measuring device. 3,398,576, 8-27-68, Cl. 73—205.

Clemens, David H., to Rohm and Haas Co. Heterocyclic esters of alkenylsuccinic anhydrides. 3,399,141, 8-27-68, Cl. 252—47.5.
Cleveland Trust Co.: *See*—
Miller, Robert L. 3,399,297.
Cloud, Charles E., and J. R. George, to Cloud Machine Corp. Web guiding and plowing system for a packaging machine and the like. 3,398,656, 8-27-68, Cl. 93—13.
Cloud Machine Corp.: *See*—
Cloud, Charles E., and George. 3,398,656.
Cluett, Peabody & Co., Inc.: *See*—
Pfeffer, Edward C., Jr., Hughes, and Wagar. 3,398,473.
Clutter, Carl E., to J. N. Binns. Saddle feed mechanism and method of operation. 3,398,595, 8-27-68, Cl. 74—409.
Coats & Clark Inc.: *See*—
Eckhardt, George R. 3,398,710.
Morin, Louis H. 3,398,775.
Morin, Louis H. 3,399,258.
Coats Co., Inc., The: *See*—
Strang, Elmer J. 3,398,777.
Cohn, Seymour B., to Emerson Electric Co. Precision radio frequency energy phase measuring system. 3,399,345, 8-27-68, Cl. 324—84.
Colgate-Palmolive Co.: *See*—
Clancy, David. 3,398,826.
Collins Radio Co.: *See*—
Andren, John J. 3,399,311.
Colombu, Eugene, A. Rufer, and A. Zumstein, to Chimiotex S.A. Apparatus for making knop yarn. 3,398,688, 8-27-68, Cl. 103—11.
Combustion Engineering, Inc.: *See*—
Hucks, Joseph S., Jr. 3,398,534.
Romanos, Nicholas D. 3,398,720.
Commercial Filters Corp.: *See*—
Adams, Edward R. 3,398,837.
Adams, Edward R., and Shepherd. 3,398,904.
Adams, Edward R., Shepherd, and Placitelli. 3,398,905.
Adams, Edward R., and Shepherd. 3,399,092.
Commissariat a l'Energie Atomique: *See*—
Aubertin, Charles, Lefebvre, Galand, and Prospert. 3,399,030.
Compagnie de Saint-Gobain: *See*—
Peyches, Pierre I. 3,399,320.
Compagnie des Freins Signaux Westinghouse: *See*—
Martin, Gerard. 3,398,995.
Compagnie Francaise Thomson Houston-Hotchkiss Brandt: *See*—
Picquender, Jean E. 3,398,537.
Compagnie Generale d'Electricite: *See*—
Burgert, Albert, and Arzul. 3,399,338.
Compton, Arthur M., to Pullman Inc. Automatic vehicle control system. 3,398,991, 8-27-68, Cl. 303—7.
Conch International Methane Ltd.: *See*—
Nelson, Warren L., and Norton. 3,398,546.
Conger, Robert P.: *See*—
Palmer, Leon B., and Conger. 3,399,106.
Congleton, Robert S.: *See*—
Ott, Lawrence H., and Congleton. 3,399,359.
Congoleum-Nairn Inc.: *See*—
Biskup, John, and Migdol. 3,399,107.
Palmer, Leon B., and Conger. 3,399,106.
Conklin, Robert M., and R. Torresen, to Brunswick Corp. Bowling ball retarder with self-adjusting damping means. 3,398,952, 8-27-68, Cl. 273—47.
Conley, Robert F., to Georgia Kaolin Co. Magnetic materials and methods of making the same. 3,399,142, 8-27-68, Cl. 252—62.6.
Conley, Walter R., Jr., S. P. Hansen, R. D. Schilling, R. H. Evers, and A. H. Rice, to Neptune Microfloc, Inc. Method of removing solids from liquids. 3,399,135, 8-27-68, Cl. 210—42.
Conlon-Moore Corp.: *See*—
Stender, Orville J. 3,398,783.
Consolidated Electrodynamics Corp.: *See*—
Cunningham, Patrick J. 3,398,914.
Continental Oil Co.: *See*—
Crownover, Carl F. 3,398,544.
Miller, Donald B. 3,399,183.
Perkins, Gerald, Jr., and Carel. 3,398,512.
Cook, Leonard R.: *See*—
Sheppard, Hylton F. G., and Cook. 3,398,737.
Cooper, Robert N.: *See*—
Fischer, Frederick W., and Cooper. 3,399,140.
Cooper, Wilbur H. Measurement gauges for cartridge cases. 3,398,456, 8-27-68, Cl. 33—174.
Corbett, Herbert O., to National Distillers and Chemicals Corp. Laminating extrusion die. 3,398,431, 8-27-68, Cl. 18—13.
Corbett, Herbert O.: *See*—
Quackenbush, John J., and Corbett. 3,398,432.
Quackenbush, John J., and Corbett. 3,399,262.
Corbin, Dennis: *See*—
Schwall, Donald V., Rogers, and Corbin. 3,399,063.
Corl, James A., to The Rucker Mfg. Co. Electrification system including a composite conductor. 3,399,281, 8-27-68, Cl. 191—23.
Corn Products Co.: *See*—
Bernetti, Raffaele, Staff, and Watson. 3,399,081.
Cornay, Clement J., and G. W. Dalgre, to The Dow Chemical Co. Method of building construction and repair using chlorinated polyolefin flashing. 3,399,091, 8-27-68, Cl. 156—71.
Cornett, Walter V. Breaker for metal items. 3,398,903, 8-27-68, Cl. 241—185.
Corning Glass Works: *See*—
Elmer, Thomas H., and Nordberg. 3,399,043.
Corpet Louvet & Cie: *See*—
Gautron, Raymond J. 3,398,620.
Courtaulds Ltd.: *See*—
Reeder, Frank, and Griffiths. 3,399,177.
Cousens, Richard H., D. W. J. Osmond, E. S. G. Simpson, and M. W. Skinner, to Imperial Chemical Industries Ltd. Dispersion coating compositions. 3,399,163, 8-27-68, Cl. 260—33.6.
Cowan, Richard T., Jr. and Sr. Pressure gauge field testing method and apparatus. 3,398,570, 8-27-68, Cl. 73—4.
Cowan, Richard T., Sr.: *See*—
Cowan, Richard T., Jr. and Sr. 3,398,570.
Cox, John R., to Balas Collet Co. Quick change tool holder. 3,398,965, 8-27-68, Cl. 279—30.
Cox, Robert B., J. H. Davids, and W. E. Johnson, to Desalination Plants (Developers of Zarchin Process) Ltd. Vacuum freeze solution separation system. 3,398,548, 8-27-68, Cl. 62—124.
Crane Co.: *See*—
Trefil, James. 3,398,964.
Crawford, George H., Jr., to Minnesota Mining & Mfg. Co. Polymers of halogenated nitrosoalkanes. 3,399,180, 8-27-68, Cl. 260—92.1.
Creager, Keith E.: *See*—
Goodrich, Charles B., Manilla, Creager, and Rudge. 3,398,-448.
Crescent Niagara Corp.: *See*—
Anggulst, Torsten F. 3,398,451.
Cricchi, James: *See*—
Rachal, Francis, and Cricchi. 3,399,360.
Crockett, Peter N., M. A. Krygowski, and T. S. Stafford, to International Business Machines Corp. Variable priority access system. 3,399,384, 8-27-68, Cl. 340—172.5.
Croset, Louis P. Torsional vibration dampers. 3,398,602, 8-27-68, Cl. 74—574.
Crowley, Walter A., and K. G. Wood. Air-cushioned and ground-engaging vehicle. 3,398,809, 8-27-68, Cl. 180—119.
Crownover, Carl F., to Continental Oil Co. Solidification of acidic components in natural gas. 3,398,544, 8-27-68, Cl. 62—12.
Croxson, Gordon, and A. R. Griffiths, to Illinois Tool Works Inc. Hinges. 3,398,425, 8-27-68, Cl. 16—150.
Cunliffe, Dennis: *See*—
Lancashire, Thomas, and Cunliffe. 3,398,934.
Cunningham, Patrick J., to Consolidated Electrodynamics Corp. Tension-responsive control for strip material reeling. 3,398,914, 8-27-68, Cl. 242—75.43.
Curtiss-Wright Corp.: *See*—
Delano, James K. 3,398,936.
Curtze, Edward W., G. O. Wehner, and J. M. Barsom, to PPG Industries, Inc. Apparatus for severing glass sheets. 3,398,-868, 8-27-68, Cl. 225—103.
Cutter Laboratories, Inc.: *See*—
Battig, Paul. 3,398,860.
D'Agaro, Raymond. Automatic adjustable sprinkler. 3,398,-894, 8-27-68, Cl. 239—97.
Dahle, Gerald W. Lead sharpener. 3,398,773, 8-27-68, Cl. 144—28.1.
Dahlman, Per O., to International Business Machines Corp. Time division and frequency division multiplexing system. 3,399,278, 8-27-68, Cl. 179—15.
Dai Nihon Bungu, Co. Ltd.: *See*—
Matsumoto, Hiroyuki. 3,399,021.
Dalgre, Gerard W.: *See*—
Cornay, Clement J., and Dalgre. 3,399,091.
Daimler-Benz Aktiengesellschaft: *See*—
Hensel, Werner R. E. 3,398,818.
Lamm, Heinz, Kortner, and Hohenlohe. 3,398,724.
Mischke, Arthur O. 3,398,496.
Schmitz, Christian, and Bruder. 3,398,529.
Dakin, Ralph K., to Bausch & Lomb Inc. Non-contact type of measuring microscope. 3,398,630, 8-27-68, Cl. 88—14.
Dal Mon Research Co.: *See*—
D'Alelio, Gaetano F. 3,399,175.
D'Alelio, Gaetano F., to Dal Mon Research Co. Process for preparing polymers of ethylenic boron and ethylenic aluminum compounds. 3,399,175, 8-27-68, Cl. 260—80.
Dalton, Edward K., to Astrodata, Inc. Phase detector output smoothing network. 3,399,352, 8-27-68, Cl. 329—122.
Daniel, James W., Jr., to Radio Corp. of America. Vehicle identifier system. 3,399,405, 8-27-68, Cl. 343—6.5.
Danken, Inc.: *See*—
Schumann, Kurt E. 3,398,693.
Das, Dilip K., and G. Freedman, to Raytheon Co. Dispersion hardening of metal. 3,399,086, 8-27-68, Cl. 148—32.
Davids, John H.: *See*—
Cox, Robert B., Davids, and Johnson. 3,398,548.
Davies, Eric, to The Marconi Co. Ltd. Interstage attenuator coupling network for tuned emitter amplifiers. 3,399,356, 8-27-68, Cl. 330—21.
Davis, Louis K., to General Electric Co. Motion damper. 3,399,317, 8-27-68, Cl. 310—93.
Davis, Malcolm R.: *See*—
Ellis, Thomas O., and Davis. 3,399,401.
Davis, Ralph E. Automatic ranging electronic voltmeter. 3,399,349, 8-27-68, Cl. 324—115.
Davis, William E., and G. P. Lee, to Radio Corp. of America. Signal translating circuit. 3,399,277, 8-27-68, Cl. 179—1.
Davco Corp.: *See*—
Mitchell, Ryan D. 3,398,838.
Dayco Corp.: *See*—
Freedlander, Abraham L., Garrett, and Matthews. 3,398,517.
Deaton, Claire N. Well pumping system and related control. 3,398,690, 8-27-68, Cl. 103—25.
Debaun, Robert M.: *See*—
Michael, Malden W., and Debaun. 3,399,148.
De Boer, Henri G. J., to N.V. Lichtdrukpapierfabriek DE Atlas. Method and apparatus for copying originals on diazotype material. 3,398,635, 8-27-68, Cl. 88—24.

Dechering, Johannes A. B., J. Ober, and A. Meijer, to North American Philips Co., Inc. Travelling wave tube having a graphite coating in the central region and the free ends at least 10 wavelengths long as a QC of at least 0.4. 3,399,326, 8–27–68, Cl. 315—3.5.
Deco Coatings Corp.: *See*—
Berger, Morris M., Blumenfeld, and Torbin. 3,399,165.
Deex, Oliver de S., and C. E. Miles, to Monsanto Co. Stabilization of ethylene/vinyl chloride latics. 3,399,157, 8–27–68, Cl. 260—29.6.
Deibel, William T., to Eaton Yale & Towne, Inc. Automotive vehicle brakes. 3,398,814, 8–27–68, Cl. 188—78.
De Koninck, Alphonse. Machine for overcast sewing. 3,398,709, 8–27–68, Cl. 112—162.
Delano, James K., to Curtiss-Wright Corp. Fuel injection pintle. 3,398,936, 8–27–68, Cl. 239—533.
De Lisle, William E., to Sylvania Electric Products, Inc. Self-timing decoder for pulse code wherein code structure is subject to restraints. 3,399,350, 8–27–68, Cl. 325—38.
DeLucia, Clement A. Stabilimeter. 3,398,581, 8–27–68, Cl. 73—379.
De Lucia, John J., and R. A. Pizzarello, to Interchemical Corp. Monoazo pigments and textiles decorated therewith. 3,399,077, 8–27–68, Cl. 117—121.
Denk, Victor: *See*—
Balogh, Lorant, Denk, Klinkhardt, and Sanger. 3,398,507.
Denss, Rolf: *See*—
Kuhnis, Hans H., Ryf, and Denss. 3,399,206.
Desalination Plants (Developers of Zarchin Process) Ltd.: *See*—
Cox, Robert B., Davids, and Johnson. 3,398,548.
De Soto Chemical Coatings, Inc.: *See*—
Sekmakas, Kazys, and Stancl. 3,399,153.
Dhondt, Prosper, to Fabrique National d'Armes de Guerre, Societe Anonyme. Damping device for the friction box of a knitting machine. 3,398,555, 8–27–68, Cl. 66—130.
Dickson, Frederick S., III., to E. I. du Pont de Nemours and Co. Spinneret enclosure. 3,398,429, 8–27–68, Cl. 18—8.
Didelot, Colette: *See*—
Maurice, Jacques, Pflugfelder, Pelrot, and Didelot. 3,399,038.
Diehl: *See*—
Mayer, Franz, and Meisner. 3,399,318.
Dinney, Davis D.: *See*—
Chambers, Jerome B., and Dinney. 3,398,750.
Disko, Joe. Bowler's finger pad with finger spacing members. 3,398,951, 8–27–68, Cl. 273—54.
Display Corp. of America.: *See*—
MacLachlan, William E. 3,398,636.
Distillers Co. Ltd.: *See*—
Huitson, John J. 3,399,158.
Dittrich, Claus. Yarn coil carrier. 3,398,915, 8–27–68, Cl. 242—118.7.
Dobler, Frich: *See*—
Bogner, Hans, and Dobler. 3,398,418.
Document Disintegration, Inc.: *See*—
O'Connor, James E., and Page. 3,398,901.
Dodd, John A., to United Kingdom Atomic Energy Authority. Sheathed fuel elements for nuclear reactors. 3,399,112, 8–27–68, Cl. 176—79.
Doi, Toshio, to Hitachi, Ltd. Electrical resistance alloys. 3,399,056, 8–27–68, Cl. 75—159.
Dokoupil, Jiří, V. Opluštil, J. Zdráhal, and J. Zubík, Strojosvit Narodni Podnik. Leather softening machine. 3,398,557, 8–27–68, Cl. 69—33.
Dolgorukov, Gregory S. Method of making a draftsman's straihgtedge. 3,398,447, 8–27–68, Cl. 29—407.
Dolgorukov, Gregory S. Method of making a T-square. 3,398,449, 8–27–68 Cl. 29—529.
Doll, John R. Color control system for a television picture tube. 3,399,323, 8–27–68, Cl. 315—18.
Dominion Engineering Works, Ltd.: *See*—
Koeller, Paul, and Eggins. 3,398,932.
Sproule, Robert S. 3,398 696.
Donnay, Joseph D. H. Highway intersection system. 3,399,379, 8–27–68, Cl. 340—40.
Donovan, Donald W., to Monsanto Co. Packaging structure. 3,398,848, 8–27–68, Cl. 215—9.
Dorn, Friedrich W.: *See*—
Mutter, Zeno, and Dorn. 3,399,054.
Doughty, Harold A.: *See*—
Snow, Gerald A., and Doughty. 3,398,875.
Douglass, John, to Affiliated Hospital Products, Inc. Bedsprings. 3,398,411, 8–27–68, Cl. 5—67.
Dow Chemical Co., The: *See*—
Bornemann, Gary A., McIlhenny, and Gensler. 3,399,181.
Breidt, Peter, Jr., and Lefevre. 3,399,105.
Bremmer, Bart J. 3,399,174.
Budde, Paul B., and Tolkmith. 3,399,210.
Cornay, Clement J., and Dalgre. 3,399,091.
Gerdes, Walter F., and Randle. 3,399,133.
Osborne, David W. 3,399,213.
Reifschneider, Walter. 3,399,239.
Rigterink, Raymond H. 3,399,205.
Vitkuske, John F. 3,399,080.
Zimmerman, Robert L., and Lee. 3,399,109.
Dow Corning Corp.: *See*—
Atwell, William H., and Weyenberg. 3,399,223.
Weyenberg, Donald R. 3,399,222.
Dozer, Bill E., to United States of America, Atomic Energy Commission. Self-calibrating liquid-level-measuring device. 3,398,578, 8–27–68, Cl. 73—304.
Dressler, Hans, and K. G. Reabe, to Koppers Co., Inc. Ultraviolet light stabilizers for plastic materials. 3,399,237, 8–27–68, Cl. 260—591.
Dresser Industries, Inc.: *See*—
Renkey, Albert L., and Troell. 3,399,267.
Scott, Robert K. 3,399,067.
Druey, Jean, and P. Schmidt, to Ciba Corp. N-substituted pyrazolo-pyrimidines. 3,399,196, 8–27–68, Cl. 260—256.4.
Du Bois, Jule J., J. A. Glover, and R. J. Buehler, to Sinclair Research, Inc. Laboratory-scale flash still for petroleum oil fractions. 3,399,116, 8–27–68, Cl. 196—98.
Dumke, Richard M.: *See*—
Taylor, Ronald J., and Dumke. 3,398,527.
Dunnington, Bruce W., to E. I. du Pont de Nemours and Co. Process for sintering diamond particles. 3,399,254, 8–27–68, Cl. 264—84.
Dupeux, Cyprien J. Journal connection for a washing machine. 3,398,556, 8–27–68, Cl. 68—18.
Du Pont de Nemours, E. I., and Co.: *See*—
Brown, George N. 3,398,829.
Clarke, Ray A., and Griffin. 3,399,188.
Dickson, Frederick S., III. 3,398,429.
Dunnington, Bruce W. 3,399,254.
Olson, Earl H. 3,399,108.
Wolinski, Leon E. 3,399,248.
Du Pont, Nicholas R.: *See*—
Waterbury, Nelson J. 3,398,406.
Durapipe & Fittings Ltd.: *See*—
Lloyde, Peter F. V. 3,398,573.
Dürig, Rudolf, and W. Bossard, to J. R. Geigy A.G. Copper-containing disazo dyestuffs. 3,399,187, 8–27–68, Cl. 260—148.
Dynamit Nobel Aktiengesellschaft: *See*—
Vogt, Wilhelm, Janssen, Kniess, and Richtzenhain. 3,399,171.
E-C Corp.: *See*—
Sliepcevich, Cedomir M., and Hashemi. 3,398,547.
EG & G, Inc.: *See*—
Turner, John L. 3,399,147.
Eakin, John V., to Eaton Yale & Towne, Inc. Frictional wear element and spring-applied brake or clutch embodying same. 3,398,822, 8–27–68, Cl. 192—66.
Eastman Kodak Co.: *See*—
Caldwell, John R., and Gilkey. 3,399,073.
Eastwood, Carey K. Collapsible pallet box. 3,398,849, 8–27–68, Cl. 217—15.
Eaton Yale & Towne, Inc.: *See*—
Deibel, William T. 3,398,814.
Eakin, John V. 3,398,822.
Eckfeldt, Edgar L., to Leeds & Northrup Co. Methods and systems for determining the solute concentration of dilute aqueous solutions. 3,399,037, 8–27–68, Cl. 23—230.
Eckhardt, George R., to Coats & Clark Inc. Lock stitch sewing machine thread case. 3,398,710, 8–27–68, Cl. 112—231.
Eckstein, Karl-Albert: *See*—
Rohde, Andreas, Eckstein, and Schumann. 3,399,004.
Edberg, Joseph: *See*—
Zernow, Louis, and Edberg. 3,398,561.
Eden, Jamal S.: *See*—
Traynor, Lee, and Eden. 3,399,246.
Edstrom, Nils H., to Telefonaktiebolaget L M Ericsson. Circuit identifying means for obtaining an outlet signal in dependence on a number of inlet signals. 3,399,280, 8–27–68, Cl. 179—18.
Edwards, Thomas L., and R. S. Kleismit; said Kleismit assor. to said Edwards. Walker attachment for wheel chair. 3,398,974, 8–27–68, Cl. 280—289.
Egbert, Earl L., P. D. Stevenson, and W. D. Sundberg, to General Motors Corp. Hydrodynamic torque transmitting unit with variable pitch blading. 3,398,532, 8–27–68, Cl. 60—54.
Eggins, Douglas W.: *See*—
Koeller, Paul, and Eggins. 3,398,932.
Egleston, Harry B., to Ex-Cell-O Corp. Apparatus for folding and tucking a container closure. 3,398,659, 8–27–68, Cl. 93—44.1.
Eichelman, George H., Jr., and I. Broverman, to Olin Mathieson Chemical Corp. Method of making aluminum bronze articles. 3,399,084, 8–27–68, Cl. 148—11.5.
Eichenberger, Kurt: *See*—
Schmidt, Paul, Wilhelm, and Eichenberger. 3,399,201.
Eickmann, Karl. Rotary radial piston machine with fluid flow supply in substantial axial direction. 3,398,698, 8–27–68, Cl. 103—161.
Ekco Products, Inc.: *See*—
Griese, Elmer W., Jr. 3,398,855.
Ekengard, Hans O. Stabilizing device for rolling vehicles. 3,398,972, 8–27–68, Cl. 280—150.5.
Ekstrom, Bertil A.: *See*—
Bamberg, Peter, Ekstrom, and Sjoberg. 3,399,207.
Elco Corp.: *See*—
Inacker, Frederick T. 3,399,371.
Elders, Alvin J., to Whirlpool Corp. Anti-wrinkle cycle for dryers with intermittent signaling means. 3,398,460, 8–27–68, Cl. 34—45.
Eldorado Mining and Refining, Ltd.: *See*—
Ritcey, Gordon M., and Ashbrook. 3,399,055.
Electric Reduction Co., The: *See*—
Smith, James W., and Gowen. 3,398,784.
Electro-Netic Steel, Inc.: *See*—
Ma, John Y., Baenziger, and Hsiao. 3,399,362.
Electro-Voice, Inc.: *See*—
Maki, William M., and Sherbino. 3,399,373.
Elektro-Thermit G.m.b.H.: *See*—
Gallotti, Carlo. 3,398,613.
Elgner, Rudolf, to A. Fritsch, KG. Device for forming crescent rolls and similar baked goods. 3,398,701, 8–27–68, Cl. 107—9.
Elineau, Hubert, to R. Senard et Fils. Continuous motion shearing machine, particularly for products in strips. 3,398,616, 8–27–68, Cl. 83—305.
Elliot Laboratories, Inc.: *See*—
Ilg, John C. 3,399,040.
Elliott, William I., and J. L. Randall. High resolution potentiometer. 3,399,368, 8–27–68, Cl. 338—177.

Ellis, Thomas O., and M. R. Davis, to United States of America, Army. Digital computer and graphic input system. 3,399,401, 8–27–68, Cl. 340—324.
Elliston, Thomas L., to Otis Engineering Corp. Retrievable well packers. 3,398,795, 8–27–68, Cl. 166—120.
Elmer, Thomas H., and M. E. Nordberg, to Corning Glass Works. Electric lamp and method of production. 3,399,043, 8–27–68, Cl. 65—30.
Emerson Electric Co.: *See*—
Chalfant Edward J., and Frank. 3,398,966.
Cohn, Seymour B. 3,399,345.
Huffman, John W. 3,399,366.
Emilson, Frederick H.: *See*—
Fraser, Grover D., and Emilson. 3,398,887.
Engelhard Industries, Inc.: *See*—
Rubin, Leonard R. 3,398,504.
Engelhard Minerals & Chemicals Corp.: *See*—
Horton, Norman H. 3,399,068.
Ennis, Brian C.: *See*—
Holan, George, and Ennis. 3,399,208.
Erba, Carlo, S.p.A.: *See*—
Giraldi, Pier N., and Mariotti. 3,399,193.
Erf, Robert K.: *See*—
Aas, Herbert G., and Erf. 3,399,013.
Erickson, Vedick A., D. Henry, and D. E. Lienemann, to International Harvester Co. Planter with rotary agitator. 3,398,865, 8–27–68, Cl. 222—317.
Erwin, Clyde L. Device for cleaning guns. 3,398,417, 8–27–68, Cl. 15—104.19.
Eschenbach, Richard C., and E. F. Stresino, to Union Carbide Corp. Method of making refractory shapes. 3,399,253, 8–27–68, Cl. 264—30.
Escher Wyss Aktiengesellschaft: *See*—
Wucherer, Josef. 3,398,996.
Wucherer, Josef. 3,398,997.
Esmay, Edward N., E. V. Jackson, and D. E. Stevens, to Bausch & Lomb Inc. Automatic focus control for light projector. 3,398,637, 8–27–68, Cl. 88—24.
Esseltepac Aktiebolag: *See*—
Jonson, Erik R. 3,398,658.
Ethyl Corp.: *See*—
Koenecke Merlin M., and Waltman. 3,398,888.
Euler, George M., to General Electric Co. Rockable plate type actuator for a plurality of contacts. 3,399,287, 8–27–68, Cl 200—159.
European Engineering Trust Reg.: *See*—
Ulrich, Helmut. 3,398,861.
Evans, David J. I., W. Kunda, H. A. Hancock, and V. N. Mackiw, to Sherritt Gordon Mines, Ltd. Production of nickel powder. 3,399,050, 8–27–68, Cl. 75—.5.
Evans, Evan W., and M. D. Smith, to Imperial Metal Industries (Kynoch), Ltd. Titanium alloys. 3,399,059, 8–27–68, Cl. 75—175.5
Evans, Wilbur F., and T. F. Wood, to Givaudan Corp. Method of controlling weeds. 3,399,049, 8–27–68, Cl. 71—123.
Evers, Johannes J. M., and H. Box, to Stamicarbon N.V. Improving the processibility of macromolecular formaldehyde polymers with amine-amide stabilizers. 3,399,168, 8–27–68, Cl 260—45.9.
Evers, Richard H.: *See*—
Conley, Walter R., Jr., Hansen, Schilling, Evers, and Rice. 3,399,135.
Ex-Cell-O Corporation: *See*—
Egleston, Harry B. 3,398,659.
Halvorsen, Robert M. 3,398,999.
FMC Corp.: *See*—
Caropreso, Frank E., Radimer, and Hogya. 3,399,090.
Fabrique National d'Armes de Guerre, Societe Anonyme: *See*—
Dhondt, Prosper. 3,398,555.
Van Vyve, Frederic E. A. 3,398,916.
Farbenfabriken Bayer Aktiengesellschaft: *See*—
Brack, Alfred. 3,399,191.
Rosendahl, Friedrich K., Rinke, and Oertel. 3,399,167.
Windemuth, Erwin, and Braun. 3,399,247.
Farber, Milton: *See*—
Miller, Robert, Farber, and Loveless. 3,399,251.
Farbwerke Hoechst Aktiengesellschaft vormals Meister Lucius & Bruning: *See*—
Happe, Wilhelm, and Hoffmann. 3,399,026.
Farkas, Adalbert, to Air Products and Chemicals, Inc. Polymerization catalyst consisting of $TiCl_4$, R_3Al, and triethylene diamine. 3,399,182, 8–27–68, Cl. 260—93.7.
Farrell, Ronald J., F. Lannert, and D. A. Balsley, to SKF Industries, Inc. Roller cage assembly. 3,399,008, 8–27–68, Cl. 308—217.
Faulkner, Willard J., to Karl W. Jensen. Speed changer for a phonograph record player. 3,398,962, 8–27–68, Cl. 274—9.
Faultsensors, Inc.: *See*—
Apfelbaum, Jerome G. 3,399,399.
Faure-Herman, Jean. Rotor and its various applications in particular to fluid meters. 3,398,930, 8–27–68, Cl. 253—39.
Fernseh G.m.b.H.: *See*—
Krause, Gerhard. 3,399,272.
Ferrara, Joseph A.: *See*—
Marks, Murray, and Ferrara. 3,398,833.
Ferro Corp.: *See*—
Fry, Ralph. 3,398,889.
Ferro Mfg. Corp.: *See*—
Littmann, Joseph C. 3,398,992.
Figar, Stepan, to Ceskoslovenska akademie ved. Sensing device for plethysmographic apparatus. 3,398,740, 8–27–68, Cl. 128—2.
Filler & Fiebig, G.m.b.H.: *See*—
Koellchen, Harald K. A. 3,399,019.
Fimbinger, Bohuslav: *See*—
Vlcek, Josef, Fimbinger, and Pavelka. 3,398,433.
Firma Aviatest G.m.b.H.: *See*—
Balogh, Lorant, Denk, Klinkhardt, and Sanger. 3,398,507.
Firma Dr. Ing. h.c.F. Porsche K.G.: *See*—
Szodfridt, Imre, and Hausinger. 3,398,603.
Firma Rheinmetall G.m.b.H.: *See*—
Gable, Walter. 3,398,683.
Fischer, Frederick W., and R. N. Cooper, to American Photocopy Equipment Co. Liquid developer for electrostatic printing. 3,399,140, 8–27–68, Cl. 252—62.1.
Fisher, Harry W.: *See*—
Kovata, Zoltan, Gestler, and Fisher. 3,398,577.
Fisher-Haynes Corp.: *See*—
Haynes, Joe R. 3,398,920.
Fisher, Hiram H., Jr., W. D. Myers, and D. V. Chenoweth, to Baker Oil Tools, Inc. Multiple injection well packer apparatus. 3,398,796, 8–27–68, Cl. 166—120.
Fleer, Thomas P., to Aurora Corp. Fail-safe regulator for gas-oven burners. 3,398,890, 8–27–68, Cl. 236—15.
Fleischer, Kurt W., and R. M. Breckenridge, to Selas Corp. of America. Tube for tube heater. 3,399,117, 8–27–68, Cl. 196—117.
Fleissner, Gerold, to Anstalt fur Patentdienst. Sieve drum installation. 3,398,464, 8–27–68, Cl. 34—122.
Fligel, Harry, to Northern Electric Co. Ltd. Automatic high voltage insulation cable test set for testing multiple conductor metal sheathed electrical cables. 3,399,342, 8–27–68, Cl. 324—54.
Flook, William M., Jr., and G. T. Barnhill III. Container for cleaning, packing, storing, and preserving paint applicators. 3,398,825, 8–27–68, Cl. 206—15.1.
Flur, Barry L., and A. J. Griest, to International Business Machines Corp. Sputter deposition of nickel-iron-manganese ferromagnetic films. 3,399,129, 8–27–68, Cl. 204—192.
Foeg, Mogens H., to F. L. Smidth & Co. Grate cooler control method and apparatus. 3,398,942, 8–27–68, Cl. 263—32.
Folmer, Frank F., to Savair Products Co. Safety latch for a fluid powered work cylinder. 3,398,651, 8–27–68, Cl. 92—27.
Forbes, Alan D., and P. Gould, to The British Petroleum Co. Synthetic lubricant composition of improved oxidation stability. 3,399,139, 8–27–68, Cl. 252—37.
Forbro Design Corp.: *See*—
Barber, Alfred W. 3,399,364.
Ford Motor Co.: *See*—
Brewer, George E. F., and Burnside. 3,399,128.
Turner, Allen H. 3,399,126.
Fore, Beaser G. Lawn and garden-surface water deflectors. 3,398,539, 8–27–68, Cl. 61—2.
Forest, Raoul A., Jr., to J-B-T Instruments, Inc. Vibrating-reed type electric instrument with built-up field and coil support. 3,399,316, 8–27–68, Cl. 310—25.
Formex Mfg. Inc.: *See*—
Alesi, John, Jr. and J. A. 3,398,434.
Forrest, Richard E.: *See*—
La Flame, Frank E., and Forrest. 3,398,866.
Forster, Emil, to Firm Emil Forster A.G. Device having a thread tensioner for weaving shuttles for threading weft threads. 3,398,766, 8–27–68, Cl. 139—217.
Forster, Emil, A.G., Firm: *See*—
Forster, Emil. 3,398,766.
Foster Grant Co., Inc.: *See*—
Leblanc, Conrad L. 3,399,018.
Foster, Harold M., R. P. Napier, and C.-C. Chu, to Mobil Oil Corp. Ethylene ketals of halovinylmercaptocyclohexanones. 3,399,216, 8–27–68, Cl. 260—340.9.
Foster, John D. Piston. 3,398,653, 8–27–68, Cl. 92—178.
Foster Wheeler Corp.: *See*—
Jorgensen, Svend M. 3,398,853.
Wolowodiuk, Walter, and Zoschak. 3,398,789.
Fox, J. Boyd, and C. P. Lamb, to Merla Tool Corp. Gas lift valves. 3,398,760, 8–27–68, Cl. 137—155.
Fox, James E., Jr., to Pan American Petroleum Corp. Apparatus for running large diameter casing. 3,398,794, 8–27–68, Cl. 166—67.
Frane Co., The: *See*—
McNabney, John C. 3,398,786.
Frank, Albert, A. Kraushaar, H. Margreiter, and R. Schunk, to Biochemie Gesellschaft mit beschraenkter Haftung. 2-(heterocyclic aminoalkyl)-cyclic ketone-2-carboxylic acid benzyl esters. 3,399,204, 8–27–68, Cl. 260—294.3.
Frank, Reinrich H.: *See*—
Chalfant, Edward J., and Frank. 3,398,966.
Frankel, Milton B., to Aerojet-General Corp. Polynitro trifluoromethyl amines. 3,399,235, 8–27–68, Cl. 260—583.
Frankel, Milton B., to Aerojet-General Corp. Nitrofluoro ethers and methods of preparation. 3,399,240, 8–27–68, Cl. 260—614.
Franzen, Gustav: *See*—
Nimtz, Klaus, and Franzen. 3,398,518.
Fraser, Grover D., and F. H. Emilson, to Ingersoll-Rand Co. Encapsulated compressor. 3,398,887, 8–27–68, Cl. 230—232.
Fredd, John V., to Otis Engineering Corp. Valves. 3,398,762, 8–27–68, Cl. 137—495.
Fredd, John V., to Otis Engineering Corp. Valves. 3,398,928, 8–27–68, Cl. 251—251.
Frederick, Claud, Jr., to The Steelcraft Mfg. Co. Shock-absorbing control apparatus for fire doors. 3,398,482, 8–27–68, Cl. 49—8.
Freedlander, Abraham L., W. C. Garrett, and R. E. Matthews, to Dayco Corp. Lawnmower blade. 3,398,517, 8–27–68, Cl. 56—295.
Freedman, George: *See*—
Das, Dilip K., and Freedman. 3,399,086.
Fridd, Lee C.: *See*—
Alen, Benjamin F., and Fridd. 3,398,828.
Fried, Alan J.: *See*—
Fried, Louis and A. J. 3,298,438.
Fried, Louis and A. J. 3,398,439.
Fried, Louis and A. J. Napkin. 3,398,438, 8–27–68, Cl. 24—7.
Fried, Louis and A. J. Napkin. 3,398,439, 8–27–68, Cl. 24—7.

Fritsch, A., K.G.: *See*—
Eigner, Rudolf. 3,398,701.
Frohlich, Sigurd. Vertical camera. 3,398,638, 8-27-68, Cl. 88—24.
Fruehauf Corp.: *See*—
Mathers, Robert V. 3,398,946.
Fry, Ralph, to Ferro Corp. Nozzle applicator for dry process enamels. 3,398,899, 8-27-68, Cl. 239—597.
Fuerst, Edwin E., and R. B. Mason, to Monsanto Co. Blow molding apparatus. 3,398,428, 8-27-68, Cl. 18—5.
Fujitsu Limited: *See*—
Funazuka, Hisashi. 3,399,392.
Fukakusa, Yoshiya: *See*—
Omoto, Tokushichi, Uchida, Ogata, Fukakusa, Saito, Imoto, Yokoyama, and Katagiri. 3,399,098.
Funazuka, Hisashi, to Fujitsu Limited. Magnetic transducer positioning apparatus. 3,399,392, 8-27-68, Cl. 340—174.1.
Furui, Shungo, 25% to Y. Akamatsu. Plural gaseous electric discharge device starting circuit using an unignited discharge device as ballast. 3,399,327, 8-27-68, Cl. 315—189.
Fuzesi, Stephen, and M. Lapkin, to Olin Mathieson Chemical Corp. Phosphorous containing starch oxyalkylated polyethers and their preparation. 3,399,190, 8-27-68, Cl. 260—233.3.
GAF Corp.: *See*—
Nichols, Gordon W., and Radin. 3,398,619.
Gagnier, Real: *See*—
Bierman, Eric, Gagnier, and Kenedi. 3,399,279.
Gahle, Walter, to Firma Rheinmetall G.m.b.H. Blank cartridge. 3,398,683, 8-27-68, Cl. 102—39.
Galaud, Gerard: *See*—
Aubertin, Charles, Lefebvre, Galaud, and Prospert. 3,399,030.
Gallacher Ltd.: *See*—
Tughan, Victor D. 3,398,754.
Gallotti, Carlo, to Elektro-Thermit G.m.b.H. Apparatus for removing excess welding material from rail welds. 3,398,613, 8-27-68, Cl. 83—3.
Gar Precision Products, Inc.: *See*—
Palmer, Albert O. 3,398,442.
Garnjost, Kenneth D., to Moog Inc. Apparatus for regulating fluid flow with respect to a hydraulic load. 3,398,650, 8-27-68, Cl. 91—421.
Garrett Corp., The: *See*—
Roush, Milton S. 3,399,058.
Garrett, Wayne C.: *See*—
Freedlander, Abraham L., Garrett, and Matthews. 3,398,517.
Garty, Kenneth T., and T. B. Gibb, Jr., to Union Carbide Corp. Polymerization of oxirane monoepoxides using an organometallic compound with water as cocatalysts. 3,399,149, 8-27-68, Cl. 260—2.
Garvey, Joseph L. Guide means. 3,398,566, 8-27-68, Cl. 72—250.
Garvey, Louis P., to General Motors Corp. Window regulator. 3,398,488, 8-27-68, Cl. 49—350.
Gasche, Fred, to Autoclave Engineers, Inc. Resilient coupling. 3,398,978, 8-27-68, Cl. 285—187.
Gattner, Hans: *See*—
Kunze, Wilhelm, Von Brachel, and Gattner. 3,399,229.
Gautron, Raymond J., to Corpet Louvet & Cie. Installation for cutting-out material in sheets. 3,398,620, 8-27-68, Cl. 83—430.
Geigy Chemical Corp.: *See*—
Kuhnis, Hans H., Ryf, and Denss. 3,399,206.
Geigy, J. R., A. G.: *See*—
Dürig, Rudolf, and Bossard. 3,399,187.
Siegrist, Gerald, and Biedermann. 3,399,027.
Geigy, J. R., S. A.: *See*—
Heller, Hansjorg, Rody, and Keller. 3,399,173.
Gelbert, Alex: *See*—
Apotheloz, Robert, Schenk, and Gelbert. 3,398,640.
Genas, Michalias, and R. M. Kern, to Societe Aquitaine-Organico. Process for the preparation of nitrosyl sulphuric acid. 3,399,034, 8-27-68, Cl. 23—139.
General Dynamics Corp.: *See*—
Hall, Arnold M. 3,398,713.
General Electric Co.: *See*—
Campbell, William B., and Hemsworth. 3,398,535.
Davis, Louis K. 3,399,317.
Euler, George M. 3,399,287.
Jacquiss, Donald B. G. 3,399,172.
Kauffman, Melvin R. 3,398,756.
Latter, Bruce B., and Slayman. 3,398,553.
General Foods Corp.: *See*—
Lutz, George J. 3,399,061.
General Mills, Inc.: *See*—
Nazy, John R., and Wheeler. 3,399,224.
General Motors Corp.: *See*—
Canter, James A. 3,399,333.
Chana, Howard E. 3,398,607.
Egbert, Earl L., Stevens, and Sundberg. 3,398,532.
Garvey, Louis P. 3,398,488.
Hall, Russell S., Patten, and Bowers. 3,398,538.
Hause, Gilbert K. 3,398,604.
Keller, Robert C. 3,398,594.
La Flame, Frank E., and Forrest. 3,398,866.
Miller, Donald G. 3,398,931.
Pardell, Milton K. 3,399,290.
Pietrzak, Joe P. 3,398,552.
Stoltman, Donald D. 3,398,937.
Suggs, Alfred M. 3,398,692.
Utter, Robert C. 3,398,606.
General Signal Corp.: *See*—
Sibley, Henry C. 3,399,305.
General Steel Industries, Inc.: *See*—
Reece, James J., and Barton. 3,399,006.

General Time Corp.: *See*—
Kolodziej, Walter F. 3,398,863.
Kolodziej, Walter F. 3,398,864.
General Tire & Rubber Co., The: *See*—
Reinbold, Emmett B. 3,398,776.
Gensler, Jay D.: *See*—
Bornemann, Gary A., McIlhenny, and Gensler. 3,399,181.
George, James R.: *See*—
Cloud, Charles E., and George. 3,398,656.
Georgia Kaolin Co.: *See*—
Conley, Robert F. 3,399,142.
Gerdes, Walter F., and H. A. Randle, to Dow Chemical Co. Method for developing a control signal and flocculating process employing same. 3,399,133, 8-27-68, Cl. 210—42.
Gesellschaft fur Linde Eismaschinen Aktiengesellschaft: *See*—
Baldus, Wolfgang. 3,398,506.
Gestler, David J.: *See*—
Kovats, Zoltan, Gestler, and Fisher. 3,398,577.
Gheorghe, Zamfir: *See*—
Teodor, Danila, Titus, and Gheorghe. 3,399,325.
Gibb, Thomas B., Jr.: *See*—
Garty, Kenneth T., and Gibb. 3,399,149.
Gilch, Heinrich G., to Union Carbide Corp. Electrolytic preparation of poly-p-xylylenes. 3,399,124, 8-27-68, Cl. 204—72.
Gilkey, Russell: *See*—
Caldwell, John R., and Gilkey. 3,399,073.
Ginsberg, Michael J., and R. H. Krock, to P. R. Mallory & Co., Inc. Method of wetting silicon nitride. 3,399,076, 8-27-68, Cl. 117—121.
Giraldi, Pier N., and V. Mariotti, to Carlo Erba S.p.A. N-tertiary amino-alkylene-4- or 5-nitro imidazoles and their preparation. 3,399,193, 8-27-68, Cl. 260—247.5.
Girault, Pierre, to CSF Compagnie Generale de Telegraphie Sans Fil. Optical system for guiding a projectile. 3,398,918, 8-27-68, Cl. 244—313.
Githens, John A., and J. G. Tryon, to United States of America, Army. Target detector for acquisition radar. 3,399,404, 8-27-68, Cl. 343—5.
Givaudan Corp.: *See*—
Evans, Wilbur F., and Wood. 3,399,049.
Glaverbel, S.A.: *See*—
Brichard, Edgard. 3,399,047.
Glover, John A.: *See*—
Du Bois, Jule J., Glover, and Buehler. 3,399,116.
Gold, Marvin H., and H. J. Marcus, to Aerojet-General Corp. Diuitrocarboxamides. 3,399,232, 8-27-68, Cl. 260—562.
Golden, Robert L., and H. J. Shopsky, to Robertshaw Controls Co. Control system and parts therefor or the like. 3,398,585, 8-27-68, Cl. 74—3.54.
Goodrich, B. F., Co., The: *See*—
Traynor, Lee, and Eden. 3,399,246.
Goodrich, Charles B., C. E. Manilla, K. E. Creager, and H. J. Rudge, to The International Nickel Co., Inc. Process for coating steel with a nickel. 3,398,448, 8-27-68, Cl. 29—420.5.
Gordon, Arthur L., to National Dairy Products Corp. Tamarind extract. 3,399,189, 8-27-68, Cl. 260—209.
Gorman, James E., G. D. Green, and R. Tevonian, to Western Electric Co., Inc. Activity reporting system. 3,399,385, 8-27-68, Cl. 340—172.5.
Gorsica, Henry J.: *See*—
Wistreich, Hugo E., Gorsica, and Peryam. 3,399,065.
Goto, Shinkichi, and B. Ushioda, to Yawata Iron & Steel Co., Ltd., and Tanaka Engineering Works, Ltd. Apparatus for scarfing rolled metal materials. 3,398,943, 8-27-68, Cl. 266—23.
Gottwald, Bruce C., and J. M. Haigh, to Albemarle Paper Co. Cast coating process using raw starch as adhesive. 3,399,074, 8-27-68, Cl. 117—64.
Gould, Patrick: *See*—
Forbes, Alan D., and Gould. 3,399,139.
Gowen, Robert A.: *See*—
Smith, James W., and Gowen. 3,398,784.
Grabe, Volkmar, to Vereinigte Flugtechnische Werke Gesellschaft mit beschrankter Haftung fruher Weser Flugzeugbau Focke-Wulf Heinkel-Flugzeugbau. Discharging device for loads on a pallet in an airplane. 3,398,917, 8-27-68, Cl. 244—137.
Grabill, Paul J., to Heisey-Hayes Co. Method and apparatus for cutting annular workpieces. 3,398,615, 8-27-68, Cl. 83—49.
Grace, W. R., & Co.: *See*—
Kirk, Charles C., Gregorian, and Werber. 3,399,250.
Laskin, Maurie. 3,398,827.
Grakauskas, Vytautas, to Aerojet-General Corp. Decarboxylation of organic carboxylic acids and acid salts with fluorine to form organic fluorine compounds. 3,399,179, 8-27-68, Cl. 260—92.1.
Grasemann, Horst: *See*—
Broich, Franz, and Grasemann. 3,399,035.
Graser, Earl J., to Olinkraft, Inc. End panel lock for wrap-around carrier. 3,398,856, 8-27-68, Cl. 220—115.
Gray, Stephen B., to Sylvania Electric Products Inc. Multiplier/divider circuit. 3,399,312, 8-27-68, Cl. 307—229.
Great Lakes Carbon Corp.: *See*—
Thomas, Edward C. 3,399,266.
Green, Geoffrey D.: *See*—
Gorman, James E., Green, and Tevonian. 3,399,385.
Greenberg, Paul B., and A. H. Turner, to United Aircraft Corp. Compressor bleed device. 3,398,881, 8-27-68, Cl. 230—122.
Greenfield, Harold, to Uniroyal, Inc. Preparation of aryl thiols. 3,399,238, 8-27-68, Cl. 260—609.
Gregorian, Razmic S.: *See*—
Kirk, Charles C., Gregorian, and Werber. 3,399,250.

Gregory, Kenneth J.: *See*—
Boenig, Herman V., Clark, and Gregory. 3,399,176.
Gress, Albert V., Jr., to The Bendix Corp. Motion translation device. 3,398,598, 8-27-68, Cl. 74—424.8.
Gretber, Hans, to Nassovia Werkzeugmaschinenfabrik G.m.b.H. Duplicating machine tool. 3,398,642, 8-27-68, Cl. 90—13.1.
Grier, Nathaniel, to Merck & Co., Inc. Nitroalkyl-piperazines. 3,399,199, 8-27-68, Cl. 260—268.
Griese, Elmer W., Jr., to Ekco Products, Inc. Packaging unit. 3,398,855, 8-27-68, Cl. 220—93.
Griest, Andrew J.: *See*—
Flur, Barry L., and Griest. 3,399,129.
Griffin, Dale M., Jr.: *See*—
Clarke, Ray A., and Griffin. 3,399,188.
Griffin, Robert E., and W. Zimmerman, to North American Rockwell Corp. Gyro monitor mechanization. 3,398,586, 8-27-68, Cl. 74—5.34.
Griffith, George L., to Trojan Powder Co. Gelatinized dinitrotoluene-nitrostarch explosives. 3,399,089, 8-27-68, Cl. 149—39.
Griffiths, Alan R.: *See*—
Croxson, Gordon, and Griffiths. 3,398,425.
Griffiths, James D.: *See*—
Reeder, Frank, and Griffiths. 3,399,177.
Grina, Kenneth I.: *See*—
Mosinskis, Victor S., and Grina. 3,398,797.
Grisham, Harold L. Wave generating device. 3,398,948, 8-27-68, Cl. 272—1.
Grivet, Francis, to J. Bobst and Son S.A. Platen press. 3,398,679, 8-27-68, Cl. 100—53.
Gross, Urban E., Jr.: *See*—
Lamb, Bernard L., and Gross. 3,398,738.
Grove, Marvin H., and L. R. Van Arsdale, to M & J Valve Co. Valve leakage detector. 3,398,761, 8-27-68, Cl. 137—312.
Guastavino, Antonio. Photocell arrangement circuitry to check longitudinal register by printing, with error provision and advanced corrections. 3,399,306, 8-27-68, Cl. 250—219.
Guba, Peter, and C. Sweeney. High shear dispersion unit. 3,398,900, 8-27-68, Cl. 241—67.
Guenin, Andre L., to La Nationale S. A. Liquid gas filling valve. 3,398,769, 8-27-68, Cl. 141—293.
Guin, Joel B. Liquid shock motor and pumping device. 3,398,686, 8-27-68, Cl. 103—1.
Gustavsson, Karl A. G., to Aktiebolaget Bahco. Sealing means for band filters. 3,398,511, 8-27-68, Cl. 55—290.
Gut, Michel, D. Lamparsky, and P. Schudel, to Givaudan Corp. Process for the isomerization of α-pinene. 3,399,244. 8-27-68, Cl. 260—675.5.
Gutermann, Traugott, and D. Kimm. Flame scarfing torch head. 3,398,898, 8-27-68, Cl. 239—549.
Guthrie, Ivan: *See*—
Veach, Wesley A., Jr., and Guthrie. 3,398,778.
Haagsma, Herman: *See*—
Chabot, Leo L., and Haagsma. 3,398,520.
Hablitzel, Hermann: *See*—
Ringel, Rudolf, Schwenk, and Hablitzel. 3 398,483.
Haderer, Edward G., to Texas Instruments Inc. Toggle switch mechanism. 3,399,285, 8-27-68, Cl. 200—67.
Hage, Charles T.: *See*—
Brant, John W. A., and Hage. 3,398,736.
Hahn, Raymond M. Tree harvester. 3,398,774, 8-27-68, Cl. 144—309.
Hahner, Reinhard, to Robert Bosch, G.m.b.H. Electric hand tool with overload coupling. 3,398,611, 8-27-68, Cl. 81—52.4.
Haigh, John M.: *See*—
Gottwald, Bruce C., and Haigh. 3,399,074.
Hall, Arnold M., to General Dynamics Corp. Tractive air cushion vehicle. 3,398,713, 8-27-68, Cl. 114—67.
Hall, David W., and E. Hurley, Jr., to Marathon Oil Co. Reaction and distillation process for N-containing solvents from mixtures thereof with hydrogen halides. 3,399,119, 8-27-68, Cl. 203—38.
Hall, Russell S., J. R. Patten, and C. Bowers, to General Motors Corp. Combustion apparatus. 3,398,538, 8-27-68, Cl. 60—267.
Halstead, Paul R., to Package Containers, Inc. Dispensing apparatus for wire reinforced paper tape. 3,398,502, 8-27-68, Cl. 53—135.
Halvorsen, Robert M., to Ex-Cell-O Corp. Linear motion ball bearing assembly. 3,398,999, 8-27-68, Cl. 308—6.
Hamada Printing Press Mfg. Co., Ltd.: *See*—
Hirose, Minoru. 3,398,681.
Hanawada, Keiichi: *See*—
Oshima, Ryoichiro, and Hanawada. 3,398,765.
Hancock, Herbert A.: *See*—
Evans, David J. I., Kunda, Hancock, and Mackiw. 3,399,050.
Hankey, Ernest H.: *See*—
Baer, Massimo, and Hankey. 3 399,155.
Hansen, Clarence M., and L. E. Ott; said Hansen, assor., to Board of Trustees, a constitutional corp. operating Michigan State University of Agriculture and Applied Science, and said Ott, assor. to Standard Oil Co. Subterranean plow. 3,398,542, 8-27-68, Cl. 61—72.2.
Hansen Sigurd P.: *See*—
Conley, Walter R., Jr., Hansen, Schilling, Evers, and Rice. 3,399,135.
Hanson, William O.: *See*—
Moore, Gary R., and Hanson. 3,398 499.
Happe, Wilhelm, and H. Hoffmann, to Farbwerke Hoechst Aktiengesellschaft vormals Meister Lucius & Bruning. Process for the production of fast orange dyeings on structures of aromatic polyesters, especially of polyethylene-terephthalates. 3,399,026, 8-27-68, Cl. 8—25.
Hardman, James A. Two piston sleeve port engine. 3,398,728, 8-27-68, Cl. 123—56.

Harwick Stove Co.: *See*—
Barber, Roy H. 3,398,735.
Hardy, Derek J., and L. A. H. Riddle, to Westland Aircraft Ltd. Flexible skirts for air cushion vehicles. 3,398,712, 8-27-68, Cl. 114—67.
Hardy, John F., and M. E. Jordan, to Cabot Corp. Process for producing metal powders and the like. 3,399,051, 8-27-68, Cl. 75—.5.
Harnischfeger Corp.: *See*—
Stone, David W. 3,399,337.
Haroldson, Victor G. Adjustable pedestal for elevated flooring. 3,398,933, 8-27-68, Cl. 254—98.
Harris, Seth O., and C. A. Ball, to American Cyanamid Co. Antistatic fiber blend. 3,399,079, 8-27-68, Cl. 117—138.8.
Harrison, William A.: *See*—
Kulka, Marshall, Thiara, and Harrison. 3,399,214.
Hart, Walter C., to Phillips Petroleum Co. Method for removing water and hydrocarbons from gaseous HCl. 3,398,508, 8-27-68, Cl. 55—71.
Harter, Franklin C., to Whirlpool Corp. Dryer with antiwrinkle cycle. 3,398,462, 8-27-68, Cl. 34—45.
Hashemi, Hadi T.: *See*—
Sliepcevich, Cedomir M., and Hashemi. 3,398,547.
Hastik, Walter: *See*—
Schutz, Erich, Hastik, and Nievelstein. 3,399,053.
Hathaway, Harley D., and B. J. Helle, to The Procter & Gamble Co. Defoaming agent. 3,399,144, 8-27-68, Cl. 252—99.
Hattori, Kentaro: *See*—
Tarama, Kimio, Kobayashi, and Hattori. 3,399,225.
Hause, Gilbert K., to General Motors Corp. Power transmission. 3,398,604, 8-27-68, Cl. 74—688.
Hausinger, Otto: *See*—
Szodfridt, Imre, and Hausinger. 3,398,603.
Haussmann, Gerhard, to Zinser-Textilmaschinen Gesellschaft mit beschrankter Haftung. Transporting apparatus for the tube changer of a textile machine. 3,398,519, 8-27-68, Cl. 57—52.
Hay, Julian A., to American Maize-Products Co. Method of producing starch phosphate products continuously. 3,399,200, 8-27-68, Cl. 260—233.5.
Haydu, Bartley A.: *See*—
Campbell, Andrew J., and Haydu. 3,398,590.
Haynes, Joe R., to Fisher-Haynes Corp. Hinge clamp. 3,398,920, 8-27-68, Cl. 248—226.
Haynl-Werke Koerber and Co. K.G.: *See*—
Stelzer, Carl. 3,398,753.
Haynie, Gerald D., to Bell Telephone Laboratories, Inc. Automatic filter selection circuit for a transmission measuring test set. 3,399,343, 8-27-68, Cl. 324—57.
Heckenhauer, William G., to Huber Corp. Front wheel axle suspension. 3,398,808, 8-27-68, Cl. 180—79.2.
Hedin, Borje: *See*—
Carlsson, Bengt, and Hedin. 3,398,844.
Helle, Bernard J.: *See*—
Hathaway, Harley D., and Helle. 3,399,144.
Heininger, Wilfred, to Paillard, S.A., and C. Zeiss-Heidenheim. Arrangement forming selectively a closing cap and a sunshade for an objective. 3,399,011, 8-27-68, Cl. 350—60.
Heise Bourdon Tube Co., Inc.: *See*—
Heise, Otto W., and Lindmark. 3,398,583.
Heise, Otto W., and A. C. Lindmark, to Heise Bourdon Tube Co., Inc. Gauge device with explosion-proof case. 3,398,583, 8-27-68, Cl. 73—416.
Heise, Otto W. Bourdon tube with a smooth internal structure. 3,398,584, 8-27-68, Cl. 73—418.
Heisler, Raymond A. Ear contacting and lifting mechanism. 3,398,711, 8-27-68, Cl. 113—1.
Heller, B., & Co.: *See*—
Wistreich, Hugo E., Gorsica, and Peryam. 3,399,065.
Heller, Hansjorg, J. Rody, and E. Keller, to J. R. Geigy S.A. Light-stable polyaddition compounds. 3,399,173, 8-27-68, Cl. 260—47.
Heller, Herbert: *See*—
Becker, Earl M., McInnes, and Heller. 3,399,398.
Hellmich, Edward J., and K. L. Whitnah. Grids. 3,398,497, 8-27-68, Cl. 52—665.
Helmerich & Payne, Inc.: *See*—
Challenger, Kenneth D., and McBrien. 3,398,851.
Hemsworth, Martin C.: *See*—
Campbell, William B., and Hemsworth. 3,398,535.
Henderson, Courtland M., and H. B. Jankowsky, to Monsanto Research Corp. Graphite containing composition and thermoelectric generator. 3,399,082, 8-27-68, Cl. 136—203.
Hendricks, Alvin L. Self-propelled crawler-type mobile platform. 3,398,806, 8-27-68, Cl. 180—2.
Henry, Daniel: *See*—
Erickson, Vedick A., Henry, and Lienemann. 3,398,865.
Henry, David W.: *See*—
Sarett, Lewis H., Hoff, and Henry. 3,399,211.
Hensel, Werner R. E., to Daimler-Benz Aktiengesellschaft. Continuous brake for vehicles, especially motor vehicles. 3,398,818, 8-27-68, Cl. 192—3.34.
Henslee, Waldo W., Jr.: *See*—
Leutwyler, Kurt, and Henslee. 3,398,803.
Herbert, Glayds F. Petticoat. 3,398,407, 8-27-68, Cl. 2—211.
Herion, Erich. Switch valve, especially magnet valve with subdivided housing parts which are detachable from each other. 3,398,764, 8-27-68, Cl. 137—614.
Herman, Ralph, and R. W. Raynor, to Radio Corp. of America. Tape cushioning apparatus for tape transports. 3,398,910, 8-27-68, Cl. 242—55.12.
Herrett, Richard A., and R. V. Berthold, to Union Carbide Corp. Substituted benzyl N-methylcarbamates as herbicides. 3,399,048, 8-27-68, Cl. 71—106.
Herrett, Richard, and R. V. Berthold, to Union Carbide Corp. 3,4-dichlorobenzyl N-methylcarbamate herbicide. 3,399,228, 8-27-68, Cl. 260—482.

Heumann, Frederick G., to Owens-Corning Fiberglas Corp. Apparatus for driving filamentary material collectors. 3,398,-907, 8-27-68, Cl. 242—46.4.
Hewlett-Packard Co.: *See—*
Phillips, Edward H. 3,399,314.
Heymann, Hans, to Olympia Werke AG. Chain switch. 3,399,-395, 8-27-68, Cl. 340—147.
Hickerson, John E., to International Business Machines Corp. Code checking mechanism. 3,399,296, 8-27-68, Cl. 235—61.11.
Hicks, John W., Jr., to American Optical Corp. Image copying apparatus and method. 3,398,669, 8-27-68, Cl. 95—73.
Higdon, Mark A. Golf club with weighted cover. 3,398,961, 8-27-68, Cl. 273—194.
Hill, Thomas G., to Lockheed Aircraft Corp. Swivel joint. 3,398,980, 8-27-68, Cl. 285—98.
Hill, Walter P., to Walter P. Hill, Inc. Precision nut for numerical control machines. 3,398,599, 8-27-68, Cl. 74—441.
Hill, Walter P., Inc.: *See—*
Hill, Walter P. 3,398,599.
Hirose, Minoru, to Hamada Printing Press Mfg. Co., Ltd. Mechanism for driving the plate and impression cylinders of a printing press. 3,398,681, 8-27-68, Cl. 101—216.
Hi-Shear Corp.: *See—*
Batten, Ronald W. 3,398,612.
Wing, George S. 3,398,628.
Hishinuma, Yukio: *See—*
Tamura, Zensuke, and Hishinuma. 3,398,509.
Hitachi, Ltd.: *See—*
Doi, Toshio. 3,399,056.
Oshima, Ryoichiro, and Hanawada. 3,398,765.
Tamura, Zensuke, and Hishinuma. 3,398,509.
Hoeberigs, Jean M. M. Automatic distributor of fried foods. 3,398,672, 8-27-68, Cl. 99—407.
Hoff, Dale R.: *See—*
Sarett, Lewis H., Hoff, and Henry. 3,399,211.
Hoffmann, Hermann: *See—*
Happe, Wilhelm, and Hoffmann. 3,399,026.
Hogya, Bernard J.: *See—*
Caropreso, Frank E., Radimer, and Hogya. 3,399,090.
Holan, George, and B. C. Ennis, to Monsanto Chemicals (Australia) Ltd. 2′-(thiazolin-2′-yl)-benzimidazoles. 3,399,-208, 8-27-68, Cl. 260—306.7.
Holan, George, and E. L. Samuel, to Monsanto Chemicals (Australia) Ltd. 2-(2′-oxazolin-2′-yl)-benzimidazoles. 3,399,-209, 8-27-68, Cl. 260—307.
Holbert, Don R., to Sinclair Research, Inc. Method of drilling a curved bore. 3,398,804, 8-27-68, Cl. 175—61.
Hollenton, Frank, to American Machine & Foundry Co. Article transfer device. 3,398,823, 8-27-68, Cl. 198—22.
Hollis Engineering, Inc.: *See—*
Wegener, Howard W., and Boynton. 3,398,873.
Holloway, Ralph T., to The Valspar Corp. Tinting apparatus and method. 3,398,858, 8-27-68, Cl. 222—30.
Holtey, Thomas O.: *See—*
Thron, John E., and Holtey. 3,399,382.
Homier, Robert L., to Lear Siegler Inc. Seat positioning mechanism. 3,398,986, 8-27-68, Cl. 297—355.
Honeywell, Inc.: *See—*
Thron, John E., and Holtey. 3,399,382.
Hood, Charles R.: *See—*
Mathes, Howard E., and Hood. 3,398,661.
Hook, Olle: *See—*
Tjerneld, Stig, and Hook. 3,398,745.
Hooper, Edwin A., ⅓ to W. A. Wallberg, and ⅓ to M. J. Clawson. Colostomy appliance. 3,398,744, 8-27-68, Cl. 128—283.
Hoover, John R. E., and R. J. Stedman, to Smith, Kline & French Laboratories. Benzimidazole ureas. 3,399,212, 8-27-68, Cl. 260—309.2.
Hori, Eiichi: *See—*
Mikoshiba, Tomoyoshi, Hori, Ishizawa, and Suzuki. 3,399,-125.
Horiuchi, Kotaro, to Nippon Gakki Seizo Kabushiki Kaisha. Ski sled. 3,398,970, 8-27-68, Cl. 280—16.
Horne, Alexander D., to The Horne Engineering Co., Ltd. Thermostatic by-pass control valve. 3,398,891, 8-27-68, Cl. 236—18.
Horne Engineering Co., Ltd., The: *See—*
Horne, Alexander D. 3,398,891.
Hornquist, Holger W. Drain guard. 3,398,830, 8-27-68, Cl. 210—153.
Hornschu, Joachim: *See—*
Bohmel, Berthold, and Hornschu. 3,399,010.
Horton, John L., to American Machine & Foundry Co. Hydrocarbon gas liquefaction by admixed gas-liquid expansion and heat exchange. 3,398,543, 8-27-68, Cl. 62—11.
Horton, Norman H., to Engelhard Minerals & Chemicals Corp. Attapulgite product and method of preparing same. 3,399,068, 8-27-68, Cl. 106—72.
Horton, Robert L., to American Cyanamid Co. 2-hydroxy-4-alkoxy-4′-alkylbenzophenones and polymers stabilized therewith. 3,399,169, 8-27-68, Cl. 260—45.95.
Hoshikuma, Shigeichi: *See—*
Tsunoda, Ichiro. 3,398,480.
Hosokawa, Kenjiro, Y. Kojima, M. Mori, and M. Suzuki, to Kanegafuchi Spinning Co., Ltd. Cationic metal-containing azo dyes from 8-hydroxyquinoline. 3,399,186, 8-27-68, Cl. 260—148.
Hosteler, Donald E., to Rexall Drug and Chemical Co. Sulfopropylated olefin block copolymers having terminal segments containing amino groups. 3,399,249, 8-27-68, Cl. 260—878.
Hough, Ralph L., and R. T. Schwartz, to United States of America, Air Force. Method and apparatus for manufacture of high strength and high modulus carbon filaments. 3,399,252, 8-27-68, Cl. 264—27.
Hoving, Tore E. Firearm with a breech bolt having a swingable action end with an extractor attached thereto. 3,398,476, 8-27-68, Cl. 42—25.
Hsiao, Christopher C.: *See—*
Ma, John Y., Baenziger, and Hsiao. 3,399,362.
Huber Corp.: *See—*
Heckenhauer, William G. 3,398,808.
Huber, John A., and B. E. Baringer, to U.S. Industries, Inc. Rack and pinion feeding apparatus. 3,398,589, 8-27-68, Cl. 74—77.
Hucks, Joseph S., Jr., to Combustion Engineering, Inc. Industrial system and process utilizing turbo-compressor unit. 3,398,534, 8-27-68, Cl. 60—95.
Hudson, John E., and F. J. Swineford, to Water Supplies, Inc. Carwashing equipment. 3,398,755, 8-27-68, Cl. 134—58.
Huff, Alvin, to R. S. Bacon Veneer Co. Chain saw apparatus. 3,398,770, 8-27-68, Cl. 143—32.
Huffman, John W., to Emerson Electric Co. Thermoresponsive snap action switch. 3,399,366, 8-27-68, Cl. 337—365.
Hufziger, Thomas W.: *See—*
Breske, Harry A., and Hufziger. 3,398,641.
Hugentobler, Max. Filter unit, in particular for coffee. 3,398,836, 8-27-68, Cl. 210—455.
Hugh, Frederick M.: *See—*
Ruhl, Charles A. L., Mayer, and Hugh. 3,398,819.
Hughes Aircraft Co.: *See—*
Ott, Lawrence H., and Congleton. 3,399,359.
Hughes, Francis H.: *See—*
Pfeffer, Edward C., Jr., Hughes, and Wagar. 3,398,473.
Hultson, John J., to The Distillers Co. Ltd. Coalescing agents for emulsion paints. 3,399,158, 8-27-68, Cl. 260—29.6.
Hurd, Billy G., to Mobil Oil Corp. Oil recovery process with surface-active agents formed in situ by injection of gases. 3,398,791, 8-27-68, Cl. 166—9.
Hurley, Edward, Jr.: *See—*
Hall, David W., and Hurley. 3,399,119.
Hurst, Charles L., to Manufacturers Machine Co. Method and apparatus for aligning wheels and axles. 3,398,453, 8-27-68, Cl. 33—46.
Huyck Corp.: *See—*
Beaumont, Ralph H., Christie, Okrepkie, and Wicker. 3,399,111.
Hydromation Engineering Co.: *See—*
Schouw, Arthur C., and Brown. 3,399,134.
Hyland, James W., Jr., to Owens-Illinois, Inc. Method and apparatus for producing containers of tubular foam laminates. 3,399,095, 8-27-68, Cl. 156—79.
Hyman, Le Roy J. Antiseptic composition of 9-aminoacridine hydrochloride and benzalkonium hydrochloride. 3,399,264, 8-27-68, Cl. 424—257.
Ibigawa Electric Industry Co., Ltd.: *See—*
Ambe, Michio. 3,399,322.
Ichikawa, Yasushi, Y. Inai, K. Shirode, and T. Ohfuka, to Asahi Kasei Kogyo Kabushiki Kaisha. Process for preparing a solution of acrylonitrile polymers. 3,399,161, 8-27-68, Cl. 260—32.4.
Ikeya, Masaharu: *See—*
Sato, Ryuichi, Ikeya, Takeishi, and Miyauchi. 3,398,691.
Ilg, John C., to Elliot Laboratories, Inc. Apparatus for treating blood. 3,399,040, 8-27-68, Cl. 23—258.5.
Illinois Tool Works Inc.: *See—*
Croxson, Gordon, and Griffiths. 3,398,425.
Illy, Hugo, to Toms River Chemical Corp. Dyeing polyester fibers with 3-hydroxyquinophthalones. 3,399,028, 8-27-68, Cl. 8—55.
Imoto, Shozo: *See—*
Omoto, Tokushichi, Uchida, Ogata, Fukakusa, Saito, Imoto, Yokoyama, and Katagiri. 3,399,098.
Imperial Chemical Industries, Ltd.: *See—*
Brayford, John R. 3,399,259.
Cousens, Richard H., Osmond, Simpson, and Skinner. 3,399,163.
Osmond, Desmond W. J. 3,399,164.
Imperial Metal Industries (Kynoch), Ltd.: *See—*
Evans, Evan W., and Smith. 3,399,059.
Inacker, Frederick T., to Elco Corp. Connector for thin film circuits. 3,399,371, 8-27-68, Cl. 339—17.
Inai, Yoshikazu: *See—*
Ichikawa, Yasushi, Inai, Shirode, and Ohfuka. 3,399,161.
Industriewerk Schaeffler OHG: *See—*
Rohde, Andreas, Eckstein, and Schumann. 3,399,004.
Ingersoll-Rand Co.: *See—*
Fraser, Grover D., and Emilson. 3,398,887.
Ingersoll Milling Machine Co.: *See—*
Schierholt, Hans. 3,399,288.
Inman, Richard B., to Scientific Atlanta, Inc. Method and apparatus for packaging. 3,398,500, 8-27-68, Cl. 53—22.
Instrumentation Specialties Co.: *See—*
Allington, Robert W. 3,398,689.
Interchemical Corp.: *See—*
De Lucia, John J., and Pizzarello. 3,399,077.
Jamrog, Robert F., and Podlewski. 3,399,152.
Interlake Steel Corp.: *See—*
Potter, Thomas C., and Burt. 3,398,675.
International Business Machines Corp.: *See—*
Chang, David. 3,399,393.
Crockett, Peter N., Krygowski, and Stafford. 3,399,384.
Dahlman, Per O. 3,399,278.
Flur, Barry L., and Griest. 3,399,129.
Hickerson, John E. 3,399,296.
Le Mehaute, Charles, and Rocher. 3,399,122.
Mullan, Philip J., and Platter. 3,398,870.
Mutter, Walter E., and Purcell. 3,399,331.
Nyman, George E., and Schultz. 3,398,580.
Orlando, Anthony W. 3,398,913.
Smith, Perrin F. 3,399,394.
Uberbacher, Edward C. 2,399,372.

International Harvester Co.: *See—*
Ash, Roy C. 3,398,515.
Bennett, James F. 3,398,800.
Maddalozzo, Raymond J. 3,398,729.
Erickson, Vedick A., Henry, and Lienemann. 3,398,865.
Maddalozzo, Raymond J. 3,398,730.
Martin, Frank M. 3,398,587.
Olsson, Nils O. 3,398,893.
Pool, Stuart D., and Sverelka. 3,398,470.
Quick, Donald J. 3,398,516.
Rhoades, Edgar W. 3,398,985.
Swanson, William C., Moyer, and Asmus. 3,398,531.
Ruhl, Charles A. L., Mayer, and Hugh. 3,398,819.
International Nickel Co., Inc., The: *See—*
Goodrich, Charles B., Manilla, Creager, and Rudge. 3,398,-448.
International Standard Electric Corp.: *See—*
Reeves, Alec H., Cattermole, and Kitajewski. 3,399,403.
Inventions Finance Corp.: *See—*
Nouel, Robert. 3,398,435.
Nouel, Robert. 3,398,436.
Inouye, Seiichi: *See—*
Bang, Carlo A. M. 3,399,078.
Ishizawa, Shingo: *See—*
Mikoshiba, Tomoyoshi, Hori, Ishizawa, and Suzuki. 3,399,-125.
J-B-T Instruments, Inc.: *See—*
Forest, Raoul A., Jr. 3,399,316.
Jackson, Earl V.: *See—*
Esmay, Edward N., Jackson, and Stevens. 3,398,637.
Jackson, Wilbur. Reed driven solid state read-out unit responsive to plural frequencies. 3,399,381, 8-27-68, Cl. 340—171.
Jacobs, Robert D., to Bausch & Lomb, Inc. Mounting mechanism for zoom magnifier. 3,399,015, 8-27-68, Cl. 350—187.
Jacobson, William P., to Anderson Bros. Mfg. Co. Reclosable package. 3,398,877, 8-27-68, Cl. 229—45.
Jahnke, Paul T. Gain power transmitting device. 3,398,596, 8-27-68, Cl. 74—413.
James, Brian D., and T. K. Tom, to The Perkin-Elmer Corp. Asymmetric ion pump and method. 3,398,879, 8-27-68, Cl. 230—69.
Jamrog, Robert F., and R. S. Podlewski, to Interchemical Corp. Black acrylic coating composition. 3,399,152, 8-27-68, Cl. 260—17.
Janke, Donald E., to Whirlpool Corp. Dryer with antiwrinkle cycle. 3,398,461, 8-27-68, Cl. 34—45.
Jankowsky, Heinz B.: *See—*
Henderson, Courtland M., and Jankowsky. 3,399,082.
Janssen, Paul: *See—*
Vogt, Wilhelm, Janssen, Kniess, and Richtzenhain. 3,399,-171.
Jansson, Elis, to Uddeholms Aktiebolag. Device relating to journalling of idler sheaves, rollers or the like, particularly idler sheave guides in rolling mills. 3,399,003, 8-27-68, Cl. 308—18.
Japan Exlan Co., Ltd.: *See—*
Nakagawa, Kazumi, Tsutsui, and Tsuge. 3,399,260.
Jaquiss, Donald B. G., to General Electric Co. Thermoplastic condensation polymers terminated with particular imide groups. 3,399,172, 8-27-68, Cl. 260—47.
Javorik, Laszlo: *See—*
Schwartz, James W., and Javorik. 3,399,319.
Jefferson Chemical Co., Inc.: *See—*
Brader, Walter H., Jr. 3,399,215.
Jenny, Ernst, to Brown, Boveri & Cie Aktiengesellschaft. Combined multi-stage power plant having a rotary compressor serving as the low pressure stage and a rotary pressure-wave machine serving as the high pressure stage. 3,398,525, 8-27-68, Cl. 60—39.17.
Jensen, Karl W.: *See—*
Faulkner, Willard J. 3,398,962.
Johansson, Carl-Gustav S., to Aktiebolaget Gylling & Co. Device for automatic control of the fuel supply to diesel engines. 3,398,731, 8-27-68, Cl. 123—198.
John, Frederick W., to The Nalge Co., Inc. Apparatus for simultaneously blow molding and compression molding plastic containers. 3,398,427, 8-27-68, Cl. 18—5.
John, Robert S., Jr., and E. K. Maxon, to Bell & Howell Co. Lenticular screen autofocus system. 3,398,665, 8-27-68, Cl. 95—45.
Johns-Manville Corp.: *See—*
Bell, George R. 3,399,136.
Johnson & Johnson: *See—*
Ziolko, Francis. 3,399,066.
Johnson, Keith O., and D. L. Robinson, to United States of America, Atomic Energy Commission. Transducer for measurement of transient velocities. 3,398,572, 8-27-68, Cl. 73—12.
Johnson, Wallace E.: *See—*
Cox, Robert B., Davids, and Johnson. 3,398,548.
Jones, Adrian L. Filter structure. 3,398,831, 8-27-68, Cl. 210—198.
Jones, John P., and G. D. McGoogan, to Wean Industries, Inc. Roll apparatus. 3,398,563, 8-27-68, Cl. 72—221.
Jones, William T.: *See—*
Rohrer, Edwin H. 3,398,489.
Jonson, Erik R., to Esseltepac Aktiebolag. Method of sealing cartons, and cartons thus sealed. 3,398,658, 8-27-68, Cl. 93—36.01.
Jordan, Merrill E.: *See—*
Hardy, John F., and Jordan. 3,399,051.
Jorgensen, Svend M., to Foster Wheeler, Corp. Shear stud vessel closures and shell joints. 3,398,853, 8-27-68, Cl. 220—55.
Josephson, Elliot. Apparatus for sending and receiving a signal on an A-C line. 3,399,397, 8-27-68, Cl. 340—216.
Jotzoff, Angelo, to Paillard S. A. Kinematographic apparatus. 3,398,909, 8-27-68, Cl. 242—65.11.
Judd, Duane E., to Bausch & Lomb, Inc. Flat field metallurgical microscope objective. 3,399,017, 8-27-68, Cl. 350—224.
Kaatz, Herbert W., and L. Tobacman, to Airborne Mfg. Co. Armored vane. 3,398,884, 8-27-68, Cl. 230—152.
Kabushiki Kaisha Hitachi Seisakusho: *See—*
Mikoshiba, Tomoyoshi, Hori, Ishizawa, and Suzuki. 3,399,-125.
Kaiser, Donald W., to Olin Mathieson Chemical Corp. Polyurethane foam prepared from an oxyalkylated polyamino-1,3,5-triazine-organic polyisocyanate reaction product. 3,399,151, 8-27-68, Cl. 260—2.5.
Kaku, Teiichi: *See—*
Nakayama, Chozo, Kaku, and Kanai. 3,399,261.
Kamborian, Jacob S.: *See—*
Vornberger, Karl F. and W. 3,398,414.
Kanai, Yasunori: *See—*
Nakayama, Chozo, Kaku, and Kanai. 3,399,261.
Kanegafuchi Spinning Co., Ltd.: *See—*
Hosokawa, Kenjiro, Kojima, Mori, and Suzuki. 3,399,186.
Karlsson, Bengt S., to Sandvikens Jernbecks Aktiebolag. Device for applying traction-augmenting studs in tires for vehicles and the like. 3,398,446, 8-27-68, Cl. 29—212.
Katagiri, Keizo: *See—*
Omoto, Tokushichi, Uchida, Ogata, Fukakusa, Saito, and K., Imoto, Yokoyama, and Katagiri. 3,399,098.
Katsumura, Toru, S. Morita, T. Ozeki, K. Tamaoki, and S. Mori. Car door actuator. 3,398,484, 8-27-68, Cl. 49—138.
Katz, Jacob M. Security plug closures for receptacles. 3,398,-852, 8-27-68, Cl. 220—39.
Kauer, Erhard, to North American Philips Co. Inc. Incandescent lamp with filament consisting of a hexaboride of a rare earth metal. 3,399,321, 8-27-68, Cl. 313—218.
Kauffman, Melvin R., to General Electric Co. Dishwasher having improved vent means. 3,398,756, 8-27-68, Cl. 134—58.
Keithley Instruments, Inc.: *See—*
Praglin, Julius, R. F. Shuster, and Noveske. 3,399,348.
Keithley Instruments, Inc.: *See—*
Yeager, John R. 3,399,339.
Keller, Ernst: *See—*
Heller, Hansjorg, Rody, and Keller. 3,399,173.
Keller, Robert C., to General Motors Corp. Spline antirattle device for countershaft transmission. 3,398,594, 8-27-68, Cl. 74—333.
Kelsey-Hayes Co.: *See—*
Grabill, Paul J. 3,398,615.
Kem Krest Products Co.: *See—*
Chaustowich, Gabriel A. 3,399,295.
Kemp, Woodrow E., to Koppers Co., Inc. Organic coatings containing sacrificial anodes. 3,399,160, 8-27-68, Cl. 260—31.2.
Kendall Co., The: *See—*
Samour, Carlos M. 3,399,159.
Kenedi, Robert: *See—*
Bierman, Eric, Gagnier, and Kenedi. 3,399,279.
Kennard, Henry J. Collapsible container units for goods transport. 3,398,850, 8-27-68, Cl. 220—6.
Kenner Products Co.: *See—*
Rave, Karl B. 3,398,479.
Kent, William C., to Western Electric Co. Apparatus for wrapping tape around a support. 3,399,099, 8-27-68, Cl. 156—479.
Kern, Rene M.: *See—*
Genas, Michallas, and Kern. 3,399,034.
Kerr, Charles E., Jr., to Powerdyne, Inc. High voltage electric switch. 3,399,286, 8-27-68, Cl. 200—144.
Key Equipment Co., Inc.: *See—*
Miller, Francis A. 3,398,423.
Khomeriki, Grigory P. Electromagnetic ball mill. 3,398,902, 8-27-68, Cl. 241—170.
Kilmer, Earl E.: *See—*
Montgomery, Rayner A., Kilmer, and Abell. 3,398,571.
Kimm, Dieter: *See—*
Gutermann, Traugott, and Kimm. 3,398,898.
King, Frederick H. Combined target and projector with aural indicator. 3,398,957, 8-27-68, Cl. 273—101.
Kingsbury Technology Inc.: *See—*
Benson, Warren E., Jr. 3,399,344.
Kinoshita, Tatsuo: *See—*
Miyoshi, Mituji, Tsuchiya, Kinoshita, and Koizumi. 3,399,150.
Kiper, Gerd, to Agfa-Gevaert Aktiengesellschaft. Shutter for photographic cameras. 3,398,667, 8-27-68, Cl. 95—53.
Kirajewski, Ryszard: *See—*
Reeves, Alex H., Cattermole, and Kitajewski. 3,399,403.
Kirk, Charles C., R. S. Gregorian, and F. X. Werber, to W. R. Grace & Co. Film comprising polyethylene and an ethylene-vinyl acetate copolymer. 3,399,250, 8-27-68, Cl. 260—897.
Klass, Donald L.: *See—*
Martinek, Thomas W., and Klass. 3,399,145.
Klein, Gerhart P., to P. R. Mallory & Co., Inc. Anodic printing by means of a hydrogen ion sensitive precipitation reaction. 3,399,121, 8-27-68, Cl. 204—2.
Klein, Louis. Protective canopy for sliding table saw. 3,398,-772, 8-27-68, Cl. 143—159.
Klein, Robert J.: *See—*
Moehlman, Vernon C., and Klein. 3,399,255.
Kleinberg, Sidney, and J. F. Tompkins, Jr., to Air Products and Chemicals, Inc. Sulfur tetrafluoride. 3,399,036, 8-27-68, Cl. 23—205.
Kleismet, Raymond S.: *See—*
Edwards, Thomas L., and Kleismit. 3,398,974.
Kliever, Waldo H.: *See—*
Little, Charles H., Kliever, and Wiemels. 3,398,452.
Klinkhardt, Erhard: *See—*
Balogh, Lorant, Denk, Klinkhardt, and Sanger. 3,398,-507.

Knapp, Spencer L., to Monsanto Co. Process and apparatus for partial combustion of hydrocarbons. 3,399,245, 8-27-68, Cl. 260—679.
Knapsack Aktiengesellschaft: *See—*
Mutter, Zeno, and Dorn. 3,399,054.
Schmelser, Kurt, Lehmann, Ziegler, and Kowalski. 3,398,-941.
Knechtel, Herbert E., and H. H. Podgurski, to United States Steel Corp. Method of nitriding. 3,399,085, 8-27-68, Cl. 148—16.6.
Kniess, Friedrich: *See—*
Vogt, Wilhelm, Janssen, Kniess, and Richtzenhain. 3,399,-171.
Knudsen, Knud J., to Lewis Engineering Co. Alternating current electric power control. 3,399,293, 8-27-68, Cl. 219—501.
Kobayashi, Yoshio: *See—*
Tarama, Kimio, Kobayashi, and Hattori. 3,399,225.
Kock, Karl A. R.: *See—*
Wallin, Carl O. H., and Kock. 3,398,714.
Koehring Co.: *See—*
Ajero, Fortunato S. 3,398,984.
Koelichen, Harold K. A., to Filler & Fiebig, G.m.b.H. Cartridge safety means for refillable pen. 3,399,019, 8-27-68, Cl. 401—134.
Koeller, Paul, and D. W. Eggins, to Dominion Engineering Works, Ltd. Oscillation damping device. 3,398,932, 8-27-68, Cl. 253—117.
Koenecke, Merlin M., and R. E. Waltman, to Ethyl Corp. Centrifuge with improved discharge assembly. 3,398,888, 8-27-68, Cl. 233—47.
Koizumi, Takeo: *See—*
Miyoshi, Mituji, Tsuchiya, Kinoshita, and Koizumi. 3,399,150.
Kojima, Yasushi: *See—*
Hosokawa, Kenjiro, Kojima, Mori, and Suzuki. 3,399,186.
Kolkman, Dirk, and A. Reynders, to North American Philips Co., Inc. Apparatus for manufacturing fluorescent lamps. 3,399,044, 8-27-68, Cl. 65—155.
Kolodziej, Walter F., to General Time Corp. Actuating device for aerosol dispenser having timing control. 3,398,863, 8-27-68, Cl. 222—70.
Kolodziej, Walter F., to General Time Corp. Adapter apparatus for automatic aerosol dispenser. 3,398,864, 8-27-68, Cl. 222—180.
Koplock, Thomas G. Clarifier. 3,398,673, 8-27-68, Cl. 99—408.
Koppelmann, Floris, to Licentia Patent-Verwaltungs-G.m.b.H. Inverter circuits with capacitor bridge commutator circuits. 3,399,336, 8-27-68, Cl. 321—5.
Koppers Co., Inc.: *See—*
Dressler, Hans, and Reabe. 3,399,237.
Kemp, Woodrow E. 3,399,160.
Nicholson, Harold L. 3,399,025.
Schappert, Hans M. 3,399,185.
Kortner, Lothar: *See—*
Lamm, Heinz, Kortner, and Hohenlohe. 3,398,724.
Kosarin, Basil A., to American Radiator & Standard Sanitary Corp. Air heating apparatus. 3,398,940, 8-27-68, Cl. 263—19.
Kotone, Eimatsu. Pneumatic impact hammer for rock crushing and pile driving. 3,398,801, 8-27-68, Cl. 173—16.
Kovats, Zoltan, D. J. Gestler, and H. W. Fisher, to Rockwell Mfg. Co. Magnetic coupling drive assembly for fluid flow meters. 3,398,577, 8-27-68, Cl. 73—231.
Kowalski, Werner: *See—*
Schmelser, Kurt, Lehmann, Ziegler, and Kowalski. 3,398,-941.
Kozlowitz, Isidore: *See—*
Schayes, Raymond, and Kozlowitz. 3,399,301.
Krause, Gerhard, to Fernseh G.m.b.H. Television signal recording and reproducing apparatus having carrier frequency higher than first aperture null frequency. 3,399,272, 8-27-68, Cl. 178—6.6.
Kraushaar, Alfred: *See—*
Frank, Albert, Kraushaar, Margreiter, and Schunk. 3,399,204.
Krauss, Paul, to Barkrauss Enterprises Ltd. Composite steel truss and precast concrete slab and beam units. 3,398,498, 8-27-68, Cl. 52—691.
Krebs, Edouard, and P. Stalb. Aqueous electrolysis cell for saline solutions, especially of alkali chlorides. 3,399,131, 8-27-68, Cl. 204—220.
Kreiskott, Horst: *See—*
Stachel, Adolf, Nitz, Resag, and Kreiskott. 3,399,195.
Krock, Richard H.: *See—*
Ginsberg, Michael J., and Krock. 3,399,076.
Krupotich, Edward A., to Mail Systems Corporation Corp. Mail feeding apparatus. 3,398,947, 8-27-68, Cl. 271—71.
Kruse, Robert B.: *See—*
Christian, Charles M., and Kruse. 3,399,088.
Krygowski, Matthew A.: *See—*
Crockett, Peter N., Krygowski, and Stafford. 3,399,384.
Kuhnis, Hans H., H. Ryf, R. Denss, to Geigy Chemical Corp. Substituted tetrahydropyridine derivatives. 3,399,206, 8-27-68, Cl. 260—297.
Kulka, Marshall, D. S. Thiara, and W. A. Harrison, to Uniroyal, Inc. Oxides of carboxamido oxathiins. 3,399,214, 8-27-68, Cl. 260—327.
Kunda, Wasyl: *See—*
Evans, David J. I., Kunda, Hancock, and Mackiw. 3,399,-050.
Kunkle, John Philip: *See—*
Pauza, William V., and Kunkle. 3,399,374.
Kunze, Allan A., to United States of America, Air Force. Time division electronic modular matrix switching system. 3,399,387, 8-27-68, Cl. 340—172.5.
Kunze, Wilhelm, H. Von Brachel, and H. Gattner, to Cassella Farbwerke Mainkur Aktiengesellschaft. Process for the production of the α,β-unsaturated carboxylic acids. 3,399,229, 8-27-68, Cl. 260—485.
Kuss, R. I., & Co., Inc.: *See—*
Kuss, Ralph L. 3,398,779.
Kuss, Ralph L., to R. I. Kuss & Co., Inc. Flexible door for building closures. 3,398,779, 8-27-68, Cl. 160—243.
Kvavle, Robert C., to United Shoe Machinery Corp. Caseless cartridges. 3,398,684, 8-27-68, Cl. 102—49.3.
Kyowa Rubber Industry Co., Ltd.: *See—*
Ueno, Yukio. 3,399,257.
La Fave, Richard L., and N. M. Zupan, to Ransburg Electro Coating Corp. Electrostatic coating apparatus. 3,398,892, 8-27-68, Cl. 239—15.
La Flame, Frank E., and R. E. Forrest, to General Motors Corp. Dishwasher pump assembly with sound damped impeller. 3,398,866, 8-27-68, Cl. 222—333.
Lake, John V., to National Research Development Corp. Method and apparatus for controlling carbon dioxide concentrations in greenhouses. 3,398,481, 8-27-68, Cl. 47—58.
La Mar Zollinger, Joseph, to Minnesota Mining and Mfg. Co. Process for preparing N-fluoro (polyfluoroalkyl) ketimines. 3,399,234, 8-27-68, Cl. 260—566.
Lamb, Bernard L., and U. E. Gross, to Aerojet-General Corp. Refrigerated surgical probe. 3,398,738, 8-27-68, Cl. 128—303.1.
Lamb, Charles P.: *See—*
Fox, J. Boyd, and Lamb. 3,398,760.
Lambert, Chandley W. Vacuum clothes dryer. 3,398,463, 8-27-68, Cl. 34—92.
Lamm, Heinz, L. Kortner, and H. Z. Hohenlohe, to Daimler Benz Aktiengesellschaft. Rotary piston internal combustion engine. 3,398,724, 8-27-68, Cl. 123—8.
Lamparsky, Dietmar: *See—*
Gut, Michel, Lamparsky, and Schudel. 3,399,244.
La Nationale S. A.: *See—*
Guenin, Andre L. 3,398,769.
Lancashire, Thomas, and D. Cunliffe, to The Boeing Co. Cargo winch system. 3,398,934, 8-27-68, Cl. 258—1.4.
Landen, Ernest W.: *See—*
Carter, John W., Landen, Miller, and Anderson. 3,399,-378.
Langley Alloys, Ltd.: *See—*
Richardson, William H., and Brown. 3,399,057.
Lannert, Fred: *See—*
Farrell, Ronald J., Lannert, and Balsley. 3,399,008.
Lanore, Raymond, to Usines Decoufle, Societe Anonyme. Cutting device for cigarette making machines. 3,398,617, 8-27-68, Cl. 83—331.
Lapkin, Milton: *See—*
Fuzesi, Stephen, and Lapkin. 3,399,190.
Larson, Elton H. Wall joint. 3,398,494, 8-27-68, Cl. 52—371.
Laskin, Maurie, to W. R. Grace & Co. Trays, and multi-tray packages. 3,398,827, 8-27-68, Cl. 206—65.
Lathrop, Francis M., II, to M & J Valve Co. Hydraulic valve operating device. 3,398,924, 8-27-68, Cl. 251—31.
Latter, Bruce B., and C. J. Slayman, to General Electric Co. Ice maker including improved sweep means. 3,398,553, 8-27-68, Cl. 62—353.
Lauterjung, Gustav. Automatic ladling device. 3,398,782, 8-27-68, Cl. 164—336.
Lear Siegler, Inc.: *See—*
Best, Willie H., Thompson, and Woodward. 3,398,459.
Burnett, Frank. 3,398,998.
Homler, Robert I. 3,398,986.
Leblanc, Conrad L., to Foster Grant Co., Inc. Rolled eyeglass lens rim construction. 3,399,018, 8-27-68, Cl. 351—154.
Le Douarec, Jean-Claude: *See—*
Regnier, Gilbert, Canevari, and Le Douarec. 3,399,192.
Lee, George P.: *See—*
Davis, William E., and Lee. 3,399,277.
Lee, Lieng-Huang: *See—*
Zimmerman, Robert L., and Lee. 3,399,109.
Leeds & Northrup Co.: *See—*
Eckfeldt, Edgar L. 3,399,037.
Leesona Corp.: *See—*
Bell, Charles C., and Niederer. 3,398,521.
Bell, Charles C. 3,398,906.
Niederer, Kurt W. 3,398,522.
Lefebvre, Jean: *See—*
Aubertin, Charles, Lefebvre, Galaud, and Prospert. 3,399,-030.
Lefevre, Lloyd E.: *See—*
Breidt, Peter, Jr., and Lefevre. 3,399,105.
Lehmann, Kurt: *See—*
Schmelser, Kurt, Lehmann, Ziegler, and Kowalski. 3,398,-941.
Leljon, Tage N. W. Side or front dumping excavating bucket with frusto-conical chutes. 3,398,472, 8-27-68, Cl. 37—118.
Leising, Maurice B., and J. J. Lenosky, to Chrysler Corp. Rotary engine with afterburner. 3,398,524, 8-27-68, Cl. 60—29.
Le Mehaute, Charles and E. Rocher, to International Business Machines Corp. Electrodeposition of a magnetostrictive magnetic alloy upon a chain-store element. 3,399,122, 8-27-68, Cl. 204—24.
Lenosky, John J.: *See—*
Leising, Maurice B., and Lenosky. 3,398,524.
Lents, Charles M., ½ to Earl J. Bauer. Liquid supply control system for a beverage dispenser. 3,398,550, 8-27-68, Cl. 62—179.
Lerch, David W., to Marine Construction & Design Co. Submersible pump device for net brailing. 3,398,694, 8-27-68, Cl. 103—87.
Les Applications Techniques Industrialles: *See—*
Bricout, Constant. 3,398,726.

Leutwyler, Kurt, and W. W. Henslee, Jr., to Baker Oil Tools, Inc. Single trip apparatus and method for sequentially setting well packers and effecting operation of perforators in well bores. 3,398,803, 8-27-68, Cl. 175—4.52.
Levin, Herman, to Bell & Howell Co. Motion sensing exposure system for optical instruments. 3,399,307, 8-27-68, Cl. 250—224.
Lewis Engineering Co.: *See—*
Knudsen, Knud J. 3,399,293.
Licentia Patent-Verwaltungs-G.m.b.H.: *See—*
Koppelman, Floris. 3,399,336.
Lichtdrukpapierfabriek DE Atlas N.V.: *See—*
De Boer, Henri G. J. 3,398,635.
Lienemann, Darlo E.: *See—*
Erickson, Vedick A., Henry, and Lienemann. 3,398,865.
Lifetime Foam Products, Inc.: *See—*
Vissage, John W. 3,399,097.
Limbach, Anthony P., to Mobil Oil Corp. Impulse sealing of thermoplastic materials. 3,399,291, 8-27-68, Cl. 219—243.
Linde Aktiengesellschaft: *See—*
Schreiber, Bernard, and Redemann. 3,398,929.
Lindmark, Andrew C.: *See—*
Helse, Otto W., and Lindmark. 3,398,583.
Little, Arthur D., Inc.: *See—*
Clancy, John J. 3,399,060.
Little, Charles H., W. H. Kliever, and E. L. Wiemels, to Universal Drafting Machine Corp. Drafting-digitizing apparatus. 3,398,452, 8-27-68, Cl. 33—18.
Littmann, Joseph C., to Ferro Mfg. Corp. Brake control system for hydraulic brakes. 3,398,992, 8-27-68, Cl. 303—20.
Litton Systems, Inc.: *See—*
Stuetzer, Otmar M. 3,398,685.
Livesey, Donald V., and K. A. Snow, to Bausch & Lomb Inc. Mixing means. 3,398,935, 8-27-68, Cl. 259—18.
Lizenzia A.G.: *See—*
Pennington, Neal A. 3,398,510.
Llewellyn, Peter M., to Varian Associates. Dual stage membrane gas separators with variable conductance means for varying their throughput. 3,398,505, 8-27-68, Cl. 55—16.
Lloyde, Peter F. V., to Durapipe & Fittings Ltd. Apparatus for testing tubular or hollow articles, particularly thermoplastic pipes, designed to withstand internal pressure. 3,398,573, 8-27-68, Cl. 73—49.5.
Lockheed Aircraft Corp.: *See—*
Hill Thomas G. 3,398,980.
Loewe Opta G.m.b.H.: *See—*
Sodtke, Wolfgang E. 3,399,354.
Loewy Engineering Co. Ltd., The: *See—*
Tracy, John A. 3,398,559.
Longenecker, Levi S. Furnace suspended skimmer wall. 3,399,-046, 8-27-68, Cl. 65—340.
Longley, Kermit: *See—*
Bernstein, Carl, and Longley. 3,399,154.
Lovekin, Barry W., to Wilkinson Sword Ltd. Apparatus for electrolytically sharpening the edges of a continuous strip. 3,399,130, 8-27-68, Cl. 204—206.
Loveless, Frederick C.: *See—*
Miller, Robert, Farber, and Loveless. 3,399,251.
Lovett, Gordon H., to Monsanto Co. Purification of olefinically unsaturated nitriles by water extractive distillation. 3,399,-120, 8-27-68, Cl. 203—84.
Lucka, Eugene R., to Summit-General Industries, Inc. Basketball game foul indicator. 3,399,400, 8-27-68, Cl. 340—323.
Lukes, Frank J. Retaliatory game. 3,398,956, 8-27-68, Cl. 273—101.
Lummus Cotton Gin Co.: *See—*
Pease, William C., III. 3,398,457.
Lutge, Heinz: *See—*
Vogler, Werner, Lutge, and Michael. 3,399,310.
Lutz, George J., to General Foods Corp. Process for improving the color of freeze-dried coffee. 3,399,061, 8-27-68, Cl. 99—71.
Lux, Joseph P.: *See—*
Miller, Lewis L., and Lux. 3,398,465.
Lynch, Charles T.: *See—*
Robinson, Lawrence B., Vahldiek, and Lynch. 3,399,256.
Lynn, Harry P., and H. J. Tischler, to Young Spring & Wire Corp. Folding automobile seat. 3,398,987, 8-27-68, Cl. 297—379.
M & J Valve Co.: *See—*
Grove, Marvin H., and Van Arsdale. 3,398,761.
Lathrop, Francis M., II. 3,398,924.
M & T Chemicals Inc.: *See—*
Passal, Frank. 3,399,123.
Remes, Nathaniel L., and Ventura. 3,399,220.
Ma, John Y., R. C. Baenziger, and C. C. Hsiao, to Electro-Netic Steel, Inc. Tuner having UHF-VHF changeover switch. 3,399,362, 8-27-68, Cl. 334—51.
MacDermid Inc.: *See—*
Slominski, Leo J. 3,399,143.
MacDonnell, Robert W., to Unity Railway Supply Co., Inc. Journal box lid seal. 3,399,005, 8-27-68, Cl. 308—44.
Mack, John C., to The Boeing Co. Shaft seal. 3,399,370, 8-27-68, Cl. 339—8.
Mackiw, Vladimir N.: *See—*
Evans, David J. I., Kunda, Hancock, and Mackiw. 3,399,050.
MacLachlan, William E., to Display Corp. of America. Projector table for overhead projector. 3,398,636, 8-27-68, Cl. 88—24.
MacLeod, Donald B., to Ampex Corp. Servo controlled motor drive with a mechanical filter between the motor and the driven member. 3,399,331, 8-27-68, Cl. 318—329.
Macrosonics Corp.: *See—*
Boucher, Raymond M. G. 3,398,944.
Maddalozzo, Raymond J., to International Harvester Co. Diesel distributor valve and governor therefor. 3,398,729, 8-27-68, Cl. 123—139.
Maddalozzo, Raymond J., to International Harvester Co. Fuel injection system and distributor valve therefor. 3,398,-730, 8-27-68, Cl. 123—139.
Maddux, William R.: *See—*
McGahee Welbourne D. 3,398,426.
Madsen, Berthel F., to Teletype Corp. Page printer. 3,399,274, 8-27-68, Cl. 178—33.
Magid, Eugene A. Valley printing effects and method of producing same. 3,399,101, 8-27-68, Cl. 161—5.
Mail Systems Corp.: *See—*
Krupotich, Edward A. 3,398,947.
Maki, William M., and R. B. Sherbino, to Electro-Voice, Inc. Electrical connector. 3,399,373, 8-27-68, Cl. 339—62.
Mallory, P. R., & Co., Inc.: *See—*
Ginsberg, Michael J. and Krock. 3,399,076.
Klein, Gerhard P. 3,399,121.
Mamiya, Hiroshi: *See—*
Mamiya, Seiichi, S. and H. 3,398,666.
Mamiya, Seiichi, S. Mamiya, and H. Mamiya. Camera focus adjusting mechanism. 3,398,666, 8-27-68, Cl. 95—45.
Mamiya, Susumu: *See—*
Mamiya, Seiichi. 3,398,666.
Mangini, Angelo, G. Mazzanti, and A. Tundo, to Aziende Colori Nazionali Affini ACNA S.p.A. Reactive dyestuffs. 3,399,194, 8-27-68, Cl. 260—249.
Manilla, Charles E.: *See—*
Goodrich Charles B., Manilla, Creager, and Rudge. 3,398,448.
Manning, George H. Mop holder device. 3,398,420, 8-27-68, Cl. 15—150.
Manufacturers Machine Co.: *See—*
Hurst, Charles L. 3,398,453.
Marathon Oil Co.: *See—*
Argabright, Perry A., and Sinkey. 3,399,233.
Milton, Harry W., Jr. 3,398,793.
Hall, David W., and Hurley. 3,399,119.
Marbill Co.: *See—*
Mattos, Anthony A. 3,398,415.
Marconi Co. Ltd., The: *See—*
Davies, Eric. 3,399,356.
Marcus, Henry J.: *See—*
Gold, Marvin H., and Marcus. 3,399,232.
Margolis, Allan M.: *See—*
Margolis, Anita M. and Allan M. 3,399,020.
Margolis, Anita M. and Allan M. Eye cosmetic applicator. 3,399,020, 8-27-68, Cl. 401—135.
Margreiter, Hans: *See—*
Frank, Albert, Kraushaar, Margreiter, and Schunk. 3,399,204.
Marine Construction & Design Co.: *See—*
Lerch, David W. 3,398,694.
Marino, Nicholas A., to Sears, Roebuck and Co. Panty with openable crotch. 3,398,739, 8-27-68, Cl. 128—529.
Mariotti, Vittorio: *See—*
Giraldi, Pier N., and Mariotti. 3,399,193.
Marks, Murray, and J. A. Ferrara, to Aerojet-General Corp. Support plates for reverse osmosis desalination apparatus. 3,398,833, 8-27-68, Cl. 210—321.
Marshall, John D.: *See—*
Chabot, Leo L., and Haagsma. 3,398,520.
Martens, Alexander E., to Bausch & Lomb, Inc. Photoelectric system for generating a signal proportional to the movement of a meter. 3,399,347, 8-27-68, Cl. 324—96.
Martin, Frank M., to International Harvester Co. Combined hitch and power train coupling assembly for tractors. 3,398,587, 8-27-68, Cl. 74—15.63.
Martin, Gerard, to Compagnie des Freins Signaux Westinghouse. Anti-skid control system for railway vehicles. 3,398,-995, 8-27-68, Cl. 303—21.
Martin, John J., to Strick Corp. Container tie down device. 3,398,922, 8-27-68, Cl. 248—361.
Martinek, Thomas W., and D. L. Klass, to Union Oil Co. of California. Dispersion of finely divided solid in nonaqueous liquid. 3,399,145, 8-27-68, Cl. 252—309.
Maschinenfabrik Sack G.m.b.H.: *See—*
Sack, Ernst T. 3,398,621.
Mason, Robert B.: *See—*
Fuerst, Edwin E., and Mason. 3,398,428.
Massey, Cecil, to United Kingdom Atomic Energy Authority. Concrete pressure vessels. 3,398,493, 8-27-68, Cl. 52—230.
Massey-Ferguson, Inc.: *See—*
Richey, Clarence B., and Rasmussen. 3,398,799.
Mathers, Robert V., to Fruehauf Corp. Contoured bracket positioned between a spring and axle. 3,398,946, 8-27-68, Cl. 267—52.
Mathes, Howard E., and C. R. Hood, to The Procter & Gamble Co. Frame blank forming machine. 3,398,661, 8-27-68, Cl. 93—52.
Matich Corp.: : *See—*
Matich, John N. 3,398,663.
Matich, John N., to Matich Corp. Pavement finishing apparatus. 3,398,663, 8-27-68, Cl. 94—45.
Matsuku Kabushiki Kaisha: *See—*
Nagashima, Jinsaku, and Nakamatsu. 3,399,282.
Matsumoto, Hiroyuki, to Dai Nibon Bungu Co. Ltd. Hard fiber core pen and its cartridge. 3,399,021, 8-27-68, Cl. 401—199.
Matsumoto, Mikio, to The Tsubakimoto Chain Mfg. Co., Ltd. Apparatus for changing a direction of floated articles on a floating conveyor. 3,398,990, 8-27-68, Cl. 302—29.
Matsushita, Hideo, I. Minobe, and Y. Sakata, to The Toyo Rubber Industry Co., Ltd. Vapor permeable synthetic leather products. 3,399,102, 8-27-68, Cl. 161—64.
Mattel, Inc.: *See—*
Unfried, Happy H. 3,398,758.
Matthews, James J. Insulation end removing tool. 3,398,610, 8-27-68, Cl. 81—9.5.

Matthews, Robert E.: See—
Freedlander, Abraham L., Garrett, and Matthews. 3,398,-517.
Mattos, Anthony A., to Marbill Co. Composite last. 3,398,415, 8-27-68, Cl. 112—133.
Matyas, John. Swinging door construction. 3,398,487, 8-27-68, Cl. 49—239.
Maurice, Jacques, B. Pflugfelder, B. Peyrot, and C. Didelot, to Societe Nationale des Petroles d'Aquitaine. Apparatus for determining sulfur content of gaseous hydrocarbons. 3,399,038, 8-27-68, Cl. 23—254.
Maxon, Eric K.: See—
John, Robert S., Jr., and Maxon. 3,398,665.
May, Jim. Portable dimensional cutting saw apparatus. 3,398,771, 8-27-68, Cl. 143—38.
Mayer, Edward: See—
Ruhl, Charles A. L., Mayer, and Hugh. 3,398,819.
Mayer, Franz, and A. Meisner, to Diehl. Permanent magnetic rotor for electric machines especially synchronous miniature motors. 3,399,318, 8-27-68, Cl. 310—156.
Mazzanti, Germana: See—
Mangini, Angelo, Mazzanti, and Tundo. 3,399,194.
McBrien, James H.: See—
Challenger, Kenneth D., and McBrien. 3,398,851.
McCabe, Leo J., to Mobil Oil Corp. Stabilization of hydrocarbon lubricating oils, greases and fuels. 3,399,041, 8-27-68, Cl. 44—73.
McCarthy, William W., to Sonic Engineering Corp. Method of carrying out chemical reactions and product thereof. 3,399,031, 8-27-68, Cl. 23—107.
McClenny, Robert W. Apparatus for working, treating and planting soil. 3,398,707, 8-27-68, Cl. 111—85.
McCormack, John F.: See—
Schneble, Frederick W., Jr., McCormack, Zeblisky, Williamson, and Polichette. 3,399,268.
McFarland, Robert H., to United States of America, Atomic Energy Commission. Method for measurement of vacuum pressure. 3,398,582, 8-27-68, Cl. 73—398.
McGahee, Welbourne D., ¼ to W. R. Maddux and ¼ to J. Rathmann. Safety hinges. 3,398,426, 8-27-68, Cl. 16—169.
McGivern, Robert F., and R. T. Shone, to Bausch & Lomb Inc. Projected scale micrometer for microscope. 3,398,631, 8-27-68, Cl. 88—14.
McGoogan, George D.: See—
Jones, John P., and McGoogan. 3,398,563.
McIlhenny, William F.: See—
Bornemann, Gary A., McIlhenny, and Gensler. 3,399,181.
McInnes, Alexander C.: See—
Becker, Earl M., McInnes, and Heller. 3,399,398.
McKay Machine Co., The: See—
Miller, John S. 3,398,652.
McLachlan, Dan, Jr., to The Board of Trustees Ohio State University. Microscope. 3,398,634, 8-27-68, Cl. 88—24.
McMahon, James F., Jr.: See—
Smykal, Robert C., Jr., and McMahon. 3,398,722.
McMaster, Harold A., and N. C. Nitschke, to Permaglass, Inc. Method and apparatus for conveying and heat treating glass sheets over a gas support bed. 3,399,042, 8-27-68, Cl. 65—25.
McMillen, Kenneth G., to Borg-Warner Corp. Hydraulic control system. 3,398,649, 8-27-68, Cl. 91—420.
McNabney, John C., to The Frane Co. Heat exchanger support assembly. 3,398,786, 8-27-68, Cl. 165—55.
McNeil Corp.: See—
Mueller, Carl H. 3,398,859.
Meier, Emil S. Reciprocating hand tool attachment for hand-drills. 3,398,588, 8-27-68, Cl. 74—50.
Meijer, Anne: See—
Dechering, Johannes A. B., Ober, and Meijer. 3,399,326.
Meisner, Alfred: See—
Mayer, Franz, and Meisner. 3,399,318.
Mejyr, Carl-Anker, to Primus-Sievert A B. Two-ring portable stove operated on liquified gas. 3,398,734, 8-27-68, Cl. 126—38.
Meng, Ng C., to Stelux Mfg. Co., Ltd. Metal chains and bracelets, e.g. for wrist watches. 3,398,523, 8-27-68, Cl. 59—80.
Menzl, Ludwig H. Vehicular towing bar. 3,398,976, 8-27-68, Cl. 280—495.
Merck & Co., Inc.: See—
Grier, Nathaniel. 3,399,199.
Patchett, Arthur A., Rogers, and Clark. 3,399,202.
Patchett, Arthur A., Clark, and Rogers. 3,399,203.
Saari, Walfred S. 3,399,226.
Sarett, Lewis H., Hoff, and Henry. 3,399,211.
Shen, Tsung-Ying, and Sarett. 3,399,198.
Wendler, Norman L., and Taub. 3,399,242.
Merla Tool Corp.: See—
Fox, J. Boyd, and Lamb. 3,398,760.
Messrs. Volkswagenwerk Aktiengesellschaft: See—
Ringel, Rudolf, Schwenk, and Hablitzel. 3,398,483.
Metall Skin Process Corp.: See—
Boldridge, Austin G., Jr. 3,399,292.
Metallgesellschaft Aktiengesellschaft: See—
Schutz, Erich, Hastik, and Nievelstein. 3,399,053.
Meyer, Frank E.: See—
Saucier, Lionel H., and Meyer. 3,398,657.
Meyerhoff, George H.: See—
Westendorf, John V., and Meyerhoff. 3,398,445.
Mezzano, John J., to Union Camp Corp. Container pallet and method of attaching. 3,398,703, 8-27-68, Cl. 108—51.
Michael, Malden W., and R. M. Debaun, to American Cyanamid Co. Platinum reforming catalyst. 3,399,148, 8-27-68, Cl. 252—463.
Michael, Ulrich: See—
Vogler, Werner, Lutge, and Michael. 3,399,310.
Migdol, Norman R.: See—
Biskup, John, and Migdol. 3,399,107.
Mikoshiba, Tomoyoshi, E. Hori, S. Ishizawa, and Y. Suzuki, to Kabushiki Kaisha Hitachi Seisakusho. Electrochemical machining in a pressurized chamber substantially without the formation of gas bubbles. 3,399,125, 8-27-68, Cl. 204—143.
Miles, Charles E.: See—
Deex, Oliver de S., and Miles. 3,399,157.
Miles Laboratories, Inc.: See—
Morison, Ayers. 3,399,284.
Milks, John E.: See—
Savides, Christos, and Milks. 3,399,178.
Miller, Donald B., to Continental Oil Co. Olefin polymerization process and catalyst therefor. 3,399,183, 8-27-68, Cl. 260—93.7.
Miller, Donald G., to General Motors Corp. Glass seal for a turbine. 3,398,931, 8-27-68, Cl. 253—39.
Miller, Francis A., to Key Equipment Co., Inc. Corn cleaner. 3,398,423, 8-27-68, Cl. 15—306.
Miller, John S., to The McKay Machine Co. Fluid cylinder assembly. 3,398,652, 8-27-68, Cl. 92—165.
Miller, Lewis L., and J. P. Lux, to Whirlpool Corp. Clothes dryer with fabric deflecting bulkhead. 3,398,465, 8-27-68, Cl. 34—133.
Miller, Robert, M. Farber, and F. C. Loveless, to Uniroyal, Inc. Alkylbenzyl adducts of polyethyleneimine blended with crystalline polyolefins. 3,399,251, 8-27-68, Cl. 260—897.
Miller, Robert G.: See—
Carter, John W., Landen, Miller, and Anderson. 3,399,378.
Miller, Robert L., to Cleveland Trust Co. Printing apparatus. 3,399,297, 8-27-68, Cl. 235—92.
Miller, Robert L., to NRM Corp. Extruder. 3,398,430, 8-27-68, Cl. 18—12.
Milligan, Neal P. Phase-sensitive detector apparatus using sets of constant power variable average amplitude pulses. 3,399,346, 8-27-68, Cl. 324—87.
Mills, King L., Jr., to Phillips Petroleum Co. Ammonolysis of alkyl halides. 3,399,236, 8-27-68, Cl. 260—585.
Milster, Arthur N., to Wagner Electric Corp. Inertia responsive antiskid control valve. 3,398,757, 8-27-68, Cl. 137—38.
Milton, Harry W., Jr., to Marathon Oil Co. Process for rapid reignition of in situ combustion. 3,398,793, 8-27-68, Cl. 166—39.
Mine Safety Appliances Co.: See—
Becker, Earl M., McInnes, and Heller. 3,399,398.
Minnesota Mining and Mfg. Co.: See—
Crawford, George H., Jr. 3,399,180.
La Mar Zollinger, Joseph. 3,399,234.
Minobe, Ichiro: See—
Matsushita, Hideo, Minobe, and Sakata. 3,399,102.
Mischke, Arthur O., to Daimler-Benz Aktiengesellschaft. Clamping connection. 3,398,496, 8-27-68, Cl. 52—463.
Missimer, George L., and I. Rasovich, to Missimers Inc. Device for dispensing spray from a moving vehicle. 3,398,-893, 8-27-68, Cl. 239—77.
Missimers Inc.: See—
Missimer, George L., and Rasovich. 3,398,893.
Mitchell, Ryan D., to Davco Corp. Removable mechanical sludge collector for package type aerobic sewage. 3,398,838, 8-27-68, Cl. 210—531.
Miyauchi, Izumi: See—
Sato, Ryuichi, Ikeye, Takeishi, and Miyauchi. 3,398,691.
Miyoshi, Mituji, S. Tsuchiya, T. Kinoshita, and T. Koizumi, to Nippon Oil Co., Ltd. Process for polymerizing olefin oxides and catalyst compositions comprising an organometallic compound with a metal carbonate or sulfate therefor. 3,399,150, 8-27-68, Cl. 260—2.
Mobil Oil Corp.: See—
Abdo, Milton K. 3,398,792.
Boswell, Donald E. 3,399,243.
Foster, Harold M., Napier, and Chu. 3,399,216.
Hurd, Billy G. 3,398,791.
Limbach, Anthony P. 3,399,291.
McCabe, Leo J. 3,399,041.
Moehlman, Vernon C., and R. J. Klein, to Olin Mathieson Chemical Corp. Method for producing projectable targets. 3,399,255, 8-27-68, Cl. 264—117.
Mohr, Rudolf. Apparatus for stacking material and automatically feeding the material to a worktable of a paper cutting machine. 3,398,841, 8-27-68, Cl. 214—8.5.
Monahan, Thomas G. Hand operated stapler. 3,398,872, 8-27-68, Cl. 227—110.
Monsanto Chemicals (Australia) Ltd.: See—
Holan, George, and Ennis. 3,399,208.
Holan, George, and Samuel. 3,399,209.
Monsanto Co.: See—
Baer, Massimo, and Hankey. 3,399,155.
Chupp, John P. 3,399,231.
Deex, Oliver de S., and Miles. 3,399,157.
Donovan, Donald W. 3,398,848.
Fuerst, Edwin E., and Mason. 3,398,428.
Knapp, Spencer L. 3,399,245.
Lovett, Gordon H. 3 399,120.
Salame, Morris. 3,399,162.
Usko, Alexander J. 3,398,678.
Vineyard, Billy D. 3,399,138.
Monsanto Research Corp.: See—
Ball, George L., III, and Salyer. 3,399,104.
Henderson, Courtland M., and Jankowsky. 3,399,082.
Salyer, Ival O., and Ball. 3,399,103.
Swihart, Donald E. 3,399,083.
Montecatini Edison S.p.A.: See—
Bertoni, Giuseppe C., and Moretti. 3,399,221.
Montgomery, Rayner A., E. E. Kilmer, and J. H. Abell, to United States of America, Navy. Explosive opening of metal diaphragms. 3,398,571, 8-27-68, Cl. 73—12.

Moog Inc.: See—
Garnjost, Kenneth D. 3,398,650.
Moore, Gary R., and W. O. Hanson; said Hanson assor. to said Moore. Interlocking extruded sections. 3,398,499, 8-27-68, Cl. 52—731.
Moretti, Giorgio: See—
Bertoni, Giuseppe C., and Moretti. 3,399,221.
Mori, Motoo: See—
Hosokawa, Kenjiro, Kojima, Mori, and Suzuki. 3,399,-186.
Mori, Sosaku: See—
Katsumura, Toru, Morita, Ozeki, Tamaoki, and Mori. 3,398,484.
Morin, Louis H., to Coats & Clark, Inc. Skew washer locknut. 3,398,775, 8-27-68, Cl. 151—15.
Morin, Louis H., to Coats & Clark, Inc. Method of automatically producing molded travelers with wear resistant inserts. 3,399,258, 8-27-68, Cl. 264—161.
Morison, Ayers, to Miles Laboratories, Inc. Indicating device. 3,399,284, 8-27-68, Cl. 200—61.05.
Morita, Shosuke: See—
Katsumura, Toru, Morita, Ozeki, Tamaoki, and Mori. 3,398,484.
Morton, William A., to Sunbeam Corp. Shuttle hearth furnaces. 3,398,939, 8-27-68, Cl. 263—6.
Mosinskis, Victor S., and K. I. Grina, to The Boeing Co. Articulated rotor system. 3,398,797, 8-27-68, Cl. 170—160.56.
Moskowitz, Donald, to Roto-Print Machinery Corp. Duplex rotary screen printing machine. 3,398,680, 8-27-68, Cl. 101—115.
Moyer, Donald W.: See—
Swanson, William C., Moyer, and Asmus. 3,398,531.
Mueller, Carl H., to McNeil Corp. Measuring pump. 3,398,859, 8-27-68, Cl. 222—41.
Mueller, George P.: See—
Rand, Royden N., and Mueller. 3,399,127.
Mueller, Hans. Filter device. 3,398,832, 8-27-68, Cl. 210—284.
Mulaskey, Bernard F., to Chevron Research Co. Hydrocracking of hydrocarbons with a catalyst composite comprising nickel and tin associated with a porous acidic inorganic oxide carrier. 3,399,132, 8-27-68, Cl. 208—111.
Mullan, Philip J., and S. Platter, to International Business Machines Corp. Controlled air film bearing. 3,398,870, 8-27-68, Cl. 226—97.
Muller, Robert E., to United States Gypsum Co. Acoustical tile with vibratile membrane extending into fissures. 3,398,-811, 8-27-68, Cl. 181—33.
Multi-Clean Products, Inc.: See—
Barry, Robert M., and Reiling. 3,398,422.
Murono, Yoshiaki: See—
Adachi, Naoyoshi, and Murono. 3,398,441.
Murphy, John V.: See—
Bartik, William J., Chow, Schwarz, and Murphy. 3,399,-309.
Mutter, Walter E., and E. D. Purcell, to International Business Machines Corp. Electrical device and contacts. 3,399,-331, 8-27-68, Cl. 317—234.
Mutter, Zeno, and F. W. Dorn, to Knapsack Aktiengesellschaft. Process for the manufacture of ferromanganese affiné of low silicon content. 3,399,054, 8-27-68, Cl. 75—80.
Mutzhas, Maximilian F. Ski having tensioning means to change the flexibility of the ski. 3,398,968, 8-27-68, Cl. 280—11.13.
Myers, Clayton S.: See—
Schaufelberger, Roy H., and Myers. 3,399,071.
Myers, William D.: See—
Fisher, Hiram H., Jr., Myers, and Chenoweth. 3,398,796.
NRM Corp.: See—
Miller, Robert L. 3,398,430.
Nagano, Masashi: See—
Shimano, Keizo, and Nagano. 3,398,973.
Nagashima, Jinsaku, and M. Nakamatsu, to Matsuku Kabushiki Kaisha. Multiple pushbutton switch. 3,399,282, 8-27-68, Cl. 200—5.
Nakagawa, Kazumi, N. Tsutsui, and J. Tsuge, to Japan Exlan Co., Ltd. Production of acrylonitrile polymer fibers. 3,399,-260, 8-27-68, Cl. 264—182.
Nakamatsu, Masao: See—
Nagashima, Jinsaku, and Nakamatsu. 3,399,282.
Nakayama, Chozo, T. Kaku, and Y. Kanai, to Asahi Kasei Kogyo Kabushiki Kaisha. Process for spinning an aqueous nitric acid solution of poly(hexamethylene)terephthalamide. 3,399,261, 8-27-68, Cl. 264—184.
Nalge Co., Inc., The: See—
John, Frederick W. 3,398,427.
Nansel, Harold K., to National Crane Corp. Extendable boom. 3,398,492, 8-27-68, Cl. 52—115.
Nansel, Harold K., to National Crane Corp. Multiple extension apparatus. 3,398,645, 8-27-68, Cl. 91—173.
Napier, Roger P.: See—
Foster, Harold M., Napier, and Chu. 3,399,216.
Nassovia Werkzeugmaschinenfabrik G.m.b.H.: See—
Grether, Hans. 3,398,642.
National Cash Register Co.: See—
Brown, George T., Jr. 3,399,402.
National Crane Corp.: See—
Nansel, Harold K. 3,398,492.
Nansel, Harold K. 3,398,645.
National Dairy Products Corp.: See—
Gordon, Arthur L. 3,399,189.
Partyka, Anthony S., and Bosy. 3,399,064.
National Distillers and Chemicals Corp.: See—
Corbett, Herbert O. 3,398,431.
Quackenbush, John J., and Corbett. 3,398,432.
Quackenbush, John J., and Corbett. 3,399,262.
National Research Development Corp.: See—
Lake, John V. 3,398,481.
National Video Corp.: See—
Schwartz, James W., and Javorik. 3,399,319.
Nazy, John R., and D. H. Wheeler, to General Mills, Inc. Dinitriles. 3,399,224, 8-27-68, Cl. 260—464.
Nedwick, Zygmund, to Athletic Devices, Inc. Football pass practice fence. 3,398,954, 8-27-68, Cl. 273—55.
Neilson, Torelv. Submersible twin hulled tug. 3,398,716, 8-27-68, Cl. 114—235.
Nelson, Warren L., and C. E. Norton, to Conch International Mathane Ltd. Tail gas separation in plural stages employing liquid natural gas refrigerant. 3,398,546, 8-27-68, Cl. 62—28.
Nemy, Alfred S., to TRW Inc. Hard tooth gears and method of making. 3,398,444, 8-27-68, Cl. 29—159.2.
Neptune Microfloc, Inc.: See—
Conley, Walter R., Jr., Hansen, Schilling, Evers, and Rice. 3,399,135.
Neuberger, Fred. Frame structure for a container. 3,398,854, 8-27-68, Cl. 220—80.
Newbery, Tomas: See—
Stoessel, Henry K., and Newbery. 3,398,624.
Nichols, Gordon W., and E. J. Radin, to GAF Corp. Photocopy machine having a variable speed copy paper cutter. 3,398,619, 8-27-68, Cl. 83—363.
Nichols, Grady B., to United States of America, National Aeronautics and Space Administration. Apparatus for phase stability determination. 3,399,299, 8-27-68, Cl. 235—154.
Nicholson, Harold L., to Koppers Co., Inc. Process for dyeing thermoplastic styrene polymer granules. 3,399,025, 8-27-68, Cl. 8—4.
Niederer, Kurt W.: See—
Bell, Charles C. and Niederer. 3,398,521.
Niederer, Kurt W., to Leesona Corp. Textile machine. 3,398,-522, 8-27-68, Cl. 57—53.
Nieman, Thomas F., to Patio Door Closer, Inc. Sliding door closer. 3,398,424, 8-27-68, Cl. 16—80.
Nienhaus, Clemens, and J. Vollmer, to Jean Wallerscheid, K.G., Firma. Double friction clutch for motor vehicles. 3,398,821, 8-27-68, Cl. 192—48.7.
Niertit, Frank, F. Pankotay, and J. Shirman, to Stromberg-Carlson Corp. Conference circuit with suppressed sidetones. 3,399,275, 8-27-68, Cl. 179—1.
Nievelstein, Ingrid H.: See—
Schutz, Erich, Hastik, and Nievelstein. 3,399,053.
Nievelstein, Marta M.: See—
Schutz, Erich, Hastik, and Nievelstein. 3,399,053.
Nievelstein, Matthias J. W. E.: See—
Schutz, Erich, Hastik, and Nievelstein. 3,399,053.
Nimtz, Klaus, and G. Franzen, to Palitex Project Co. G.m.b.H. Two-for-one twisting machine. 3,398,518, 8-27-68, Cl. 57—34.
Nippon Carbide Kogyo Kabushiki Kaisha: See—
Tarama, Kimio, Kobayashi, and Hattori. 3,399,225.
Nippon Gakki Seizo Kabushiki Kaisha: See—
Horiuchi, Kotaro. 3,398,970.
Nippon Kakoh Seishi K. K.: See—
Omoto, Tokushichi, Uchida, Ogata, and Fukakusa, Saito, T. and K., Imato, Yokoyama, and Katagiri. 3,399,098.
Nippon Kikai Keiso Kaisha, Ltd.: See—
Sato, Ryuichi, Ikeya, Takeishi, and Miyauchi. 3,398,691.
Nippon Oil Co., Ltd.: See—
Miyoshi, Mituji, Tsuchiya, Kinoshita, and Koizumi. 3,399,150.
Nitschke, Norman C.: See—
McMaster, Harold A., and Nitschke. 3,399,042.
Nitz, Rolf-Eberhard: See—
Stachel, Adolf, Nitz, Resag, and Kreiskott. 3,399,195.
Noe, Joseph J. Church kneeler device. 3,398,988, 8-27-68, Cl. 297—426.
Nolan, Frank N. Power mower with grass catcher. 3,398,514, 8-27-68, Cl. 56—25.4.
Nordberg, Martin E.: See—
Elmer, Thomas H., and Nordberg. 3,399,043.
North American Philips Co., Inc.: See—
Dechering, Johannes A. B., Ober, and Meijer. 3,399,326.
Kauer, Erhard. 3,399,321.
Kolkman, Dirk, and Reynders. 3,399,044.
Remmers, Gerrit. 3,399,000.
Remmers, Gerrit, and Tepe. 3,399,007.
Reynders, Anton. 3,399,045.
Richards, Norman D. 3,399,388.
Van Hoof, Albertus J. F. M. 3,398,768.
Wersche, Gunter. 3,398,963.
North American Rockwell Corp.: See—
Atkinson, James L. 3,399,002.
Carrell, Terry E. 3,399,302.
Griffin, Robert E., and Zimmerman. 3,398,586.
Pollock, David B., and Swift. 3,398,569.
Pulliam, George R. 3,399,072.
Northern Electric Co. Ltd.: See—
Bierman, Eric, Gagnier, and Kenedi. 3,399,279.
Filgel, Harry. 3,399,342.
Norton, Christopher E.: See—
Nelson, Warren L., and Norton. 3,398,546.
Nouel, Robert, to Inventions Finance Corp. Method and apparatus for molding plastics. 3,398,435, 8-27-68, Cl. 18—30.
Nouel, Robert, to Inventions Finance Corp. Automatic regulator valve for injection moulding. 3,398,436, 8-27-68, Cl. 18—30.
Noveske, Thomas J.: See—
Praglin, Julius, Shuster, and Noveske. 3,399,348.
Null, Victor G. Rotary engine. 3,398,725, 8-27-68, Cl. 123—16.
Nuttall, Fleet E., and P. A. Cantor, to Aerojet-General Corp. Reverse osmosis water purification apparatus and cell therefor. 3 398,834, 8-27-68, Cl. 210—321.
Nyman, George E., and L. K. Schultz, to International Business Machines Corp. Thermocouple temperature measurement. 3,398,580, 8-27-68, Cl. 73—359.

Ober, Jacob: *See*—
Dechering, Johannes A. B., Ober, and Meijer. 3,399,326.
O'Connor, James E., and R. G. Page, to Document Disintegration, Inc. Destructor milling mechanism. 3,398,901, 8–27–68, Cl. 241—154.
Oerlikon-Buhrle Holding Ltd.: *See*—
Apotheloz, Robert. 3,398,639.
Apotheloz, Robert, Schenk, and Gelbert. 3,398,640.
Oertel, Harald: *See*—
Rosendahl, Friedrich K., Rinke, and Oertel. 3,399,167.
Offer, Robert J., to Walker Mfg. Co. Filter. 3,398,835, 8–27–68, Cl. 210—443.
Ogata, Takeshi: *See*—
Omoto, Tokushichi, Uchida, Ogata, Fukakusa, Saito, T. and K., Imoto, Yokoyama,a nd Katagiri. 3,399,098.
Ohfuka, Toshio: *See*—
Ichikawa, Yasushi, Inai, Shirode, and Ohfuka. 3,399,161.
Ohio State University, The Board of Trustees: *See*—
McLachlan, Dan, Jr. 3,398,634.
Ohsawa, Takeyoshi, M. Shibukawa, and H. Takahashi, to Asahi Kasei Kogyo Kabushikikaisha. Process for producing L-glutamic acid by using bacteria. 3,399,114, 8–27–68, Cl. 195—47.
Okrepkie, John: *See*—
Beaumont, Ralph H., Christie, Okrepkie, and Wicker. 3,399,111.
Olah, Emery E., to Turbine Products, Inc. Gas turbine and fuel delivery means therefor. 3,398,526, 8–27–68, Cl. 60—39.28.
Olin Mathieson Chemical Corp.: *See*—
Eichelman, George H., Jr., and Broverman. 3,399,084.
Fuzesi, Stephen, and Lapkin. 3,399,190.
Kaiser, Donald W. 3,399,151.
Moehlman, Vernon C., and Klein. 3,399,255.
Smith, Eric. 3,399,241.
Zaslowski, Joel A. 3,399,217.
Olinkraft, Inc.: *See*—
Graser, Earl J. 3,398,856.
Olson, Earl H., to E. I. du Pont de Nemours and Co. Crimpable, composite nylon filament and fabric knitted therefrom. 3,399,108, 8–27–68, Cl. 161—173.
Olson, Ole N. Firearm cartridge lubricator. 3,398,629, 8–27–68, Cl. 86—19.
Olsson, Billy E., to Vaco Products Co. Terminal crimping machine stroke adjustment. 3,398,567, 8–27–68, Cl. 72—400.
Olsson, Billy E., to Vaco Products Co. Terminal crimping machine pitch adjustment. 3,398,568, 8–27–68, Cl. 72—421.
Olsson, Nils O., to International Harvester Co. Implement mounting mechanism. 3,398,983, 8–27–68, Cl. 287—189.36.
Olympia Werke AG: *See*—
Heymann, Hans. 3,399,395.
Omoto, Tokushichi, M. Uchida, T. Ogata, Y. Fukakusa, T. and K. Saito, S. Imoto, K. Yokoyama, and K. Katagiri, to Nippon Kakoh Seishi K. K. Method for production of foamed polyethylene. 3,399,098, 8–27–68, Cl. 156—200.
Omsteel Industries, Inc.: *See*—
Brown, William D. 3,398,471.
Operation Oil Heat Associates, Inc.: *See*—
Bailey, Frank W. 3,399,022.
Oplustil, Vaclav: *See*—
Dokoupil, Jiri, Oplustil, Zdrahal, and Zubik. 3,398,557.
Orlando, Anthony W., to International Business Machines Corp. Vacuum controlled jet transport apparatus for magnetic tape. 3,398,913, 8–27–68, Cl. 242—71.8.
Ortmans, Emile M. Change speed gear having a trapezoidal belt. 3,398,593, 8–27–68, Cl. 74—230.17.
Osborne, David W., to The Dow Chemical Co. Imide compounds and methods for the preparation of imide compounds. 3,399,213, 8–27–68, Cl. 260—326.
Oshima, Ryoichiro, and K. Hanawada, to Hitachi, Ltd. Bent pipe way having improved flow characteristics. 3,398,765, 8–27–68, Cl. 138—39.
Osmond, Desmond W. J.: *See*—
Cousens, Richard H., Osmond, Simpson, and Skinner. 3,399,163.
Osmond, Desmond W. J., to Imperial Chemical Industries Ltd. Polymer dispersions. 3,399,164, 8–27–68, Cl. 260—33.6.
Otis Engineering Corp.: *See*—
Elliston, Thomas L. 3,398,795.
Fredd, John V. 3,398,762.
Fredd, John V. 3,398,928.
Ott, Lawrence H., and R. S. Congleton, to Hughes Aircraft Co. Solid-state laser. 3,399,359, 8–27–68, Cl. 331—94.5.
Ott, Louis E.: *See*—
Hansen, Clarence M., and Ott. 3,398,542.
Otto, Dr. C., & Comp. G.m.b.H.: *See*—
Spindeler, Heinz. 3,398,416.
Outboard Marine Corp.: *See*—
Quiram, Ronald G., and Borst. 3,398,878.
Owens-Corning Fiberglas Corp.: *See*—
Heumann, Frederick G. 3,398,907.
Walpole, Austin O. 3,398,945.
Owens-Illinois, Inc.: *See*—
Bloomer, William J. 3,398,574.
Hyland, James W., Jr. 3,399,095.
Saucier, Lionel H., and Meyer. 3,398,657.
Ozeki, Tokutaro: *See*—
Katsumura, Toru, Morita, Ozeki, Tamaoki, and Mori. 3,398,484.
PPG Industries, Inc.: *See*—
Curtze, Edward W., Wehner, and Barsom. 3,398,868.
Package Containers, Inc.: *See*—
Halstead, Paul R. 3,398,502.
Page, Richard G.: *See*—
O'Connor, James E., and Page. 3,398,901.
Paillard S.A.: *See*—
Jotzoff, Angelo. 3,398,909.
Heininger, Wilfred. 3,399,011.
Palitex Project Co. G.m.b.H.: *See*—
Nimtz, Klaus, and Franzen. 3,398,518.
Palmer, Albert O., to Gar Precision Products, Inc. Metal abrasive sheet and a method of making same. 3,398,442, 8–27–68, Cl. 29—78.
Palmer, Donald M. Tag holding device. 3,398,475, 8–27–68, Cl. 40—11.
Palmer, Leon B., and R. P. Conger, to Congoleum-Nairn Inc. Embossed resinous compositions and process for preparing same. 3,399,106, 8–27–68, Cl. 161—119.
Paluzzi, Guirino W. Fishhook live bait harness. 3,398,477, 8–27–68, Cl. 43—44.4.
Pan American Petroleum Corp.: *See*—
Fox, James E., Jr. 3,398,794.
Silverman, Daniel. 3,399,300.
Vincent, Renic P. 3,398,845.
Panaccione, Domenico: *See*—
Capraro, Paul, and Panaccione. 3,398,408.
Pankotay, Ferenc: *See*—
Niertit, Frank, Pankotay, and Shirman. 3,399,275.
Pardell, Milton K., to General Motors Corp. Iridium beading process. 3,399,290, 8–27–68, Cl. 219—150.
Parker, Bruce H., Jr. Line justifying device. 3,398,670, 8–27–68, Cl. 95—85.
Parker-Kalon Corp.: *See*—
Skierski, Edwin J. 3,398,413.
Partyka, Anthony S., and G. Bosy, to National Dairy Products Corp. Method of manufacture of ketchup. 3,399,064, 8–27–68, Cl. 99—144.
Passal, Frank, to M & T Chemicals Inc. Electrolytes and method for electroplating nickel. 3,399,123, 8–27–68, Cl. 204—49.
Patchett, Arthur A., E. F. Rogers, and R. L. Clark, to Merck and Co., Inc. 6,7-disubstituted quinolates. 3,399,202, 8–27–68, Cl. 260—287.
Patchett, Arthur A., R. L. Clark, and E. F. Rogers, to Merck & Co., Inc. 6-loweralkoxy-7-loweralkyl quinolates. 3,399,203, 8–27–68, Cl. 260—287.
Patio Door Closer, Inc.: *See*—
Nieman, Thomas F. 3,398,424.
Patten, John R.: *See*—
Hall, Russell S., Patten, and Bowers. 3,398,538.
Paulsen, Hans C., to United Shoe Machinery Corp. Thermoplastic dispensing mechanisms. 3,398,717, 8–27–68, Cl 118—7.
Paulus, Rudolf, to Agfa-Gevaert Aktiengesellschaft. Apparatus for eliminating interelectrode leakage in a photomultiplier type exposure control system by providing a compensating voltage. 3,399,304, 8–27–68, Cl. 250—207.
Pauza, William V., and J. P. Kunkle, to AMP, Inc. Disengageable electrical connections. 3,399,374, 8–27–68, Cl. 339—91.
Pavelka, Jiri: *See*—
Vlcek, Josef, Flimbinger, and Pavelka. 3,398,433.
Pearsall, Ralph E., to United Shoe Machinery Corp.. Snares. 3,398,478, 8–27–68, Cl. 43—58.
Pease, William C., III, to Lummus Cotton Gin Co. Process and apparatus for moisture conditioning batches of seed cotton and the like. 3,398,457, 8–27–68, Cl. 34—10.
Pebra G.m.b.H., Paul Braun: *See*—
Braun, Oscar. 3,398,921.
Peek, Vernon E., to Anderson Electric Corp. Electrical connector. 3,399,375, 8–27–68, Cl. 339—104.
Pennington, Neal A., to Lizenzia A.G. Humidity changer. 3,398,510, 8–27–68, Cl. 55—163.
Perkin-Elmer Corp., The: *See*—
James, Brian D., and Tom. 3,398,879.
Perkins, Gerald, Jr., and A. B. Carel, to Continental Oil Co. Chromatography apparatus. 3,398,512, 8–27–68, Cl. 55—386.
Permaglass, Inc.: *See*—
McMaster, Harold A., and Nitschke. 3,399,042.
Perry, Thomas E. Attachment for boot to adapt boot for use with ski binding. 3,398,969, 8–27–68, Cl. 280—11.35.
Peryam, David B.: *See*—
Wistreich, Hugo E., Gorsica, and Peryam. 3,399,065.
Peters, Charles J., to Sylvania Electric Products, Inc. Optical transmission line for guiding an optical beam. 3,399,012, 8–27–68, Cl. 350—96.
Peterson, Gerald H. Kinetic energy absorber. 3,398,812, 8–27–68, Cl. 188—1.
Petty, Henry W. Expansible reinforcing element for masonry wall joints. 3,398,495, 8–27–68, Cl. 52—442.
Peyches, Pierre I., to Compagnie de Saint-Gobain. Polychrome striped screens for color television receiver comprising filaments of homogeneous glass. 3,399,320, 8–27–68, Cl. 313—92.
Peyrot, Bernard: *See*—
Maurice, Jacques, Pflugfelder, Peyrot, and Didelot. 3,399,038.
Pfeffer, Edward C., Jr., F. H. Hughes, and A. E. Wagar, to Cluett, Peabody & Co., Inc. Feed apparatus. 3,398,473, 8–27–68, Cl. 38—10.
Pflugfelder, Bernard: *See*—
Maurice, Jacques, Pflugfelder, Peyrot, and Didelot. 3,399,038.
Phelps Dodge Copper Products Corp.: *See*—
Yearley, Douglas C. 3,398,780.
Philco-Ford Corp.: *See*—
Stolins, Arthur B., Jr. 3,398,536.
Phillips, Edward H., to Hewlett-Packard Co. Ultrasonic signal apparatus. 3,399,314, 8–27–68, Cl. 310—8.2.
Phillips Petroleum Co.: *See*—
Hart, Walter C. 3,398,508.
Mills, King L., Jr. 3,399,236.
Photocircuits Corp.: *See*—
Schneble, Frederick W., Jr., McCormack, Zeblisky, Williamson, and Polichette. 3,399,268.
Piacitelli, James V.: *See*—
Adams, Edward R., Shepherd, and Piacitelli. 3,398,905.

Picquendar, Jean E., to Compagnie Francaise Thomson Houston-Hotchkiss Brandt. Solid-fuel controllable-thrust propulsion device. 3,398,537, 8–27–68, Cl. 60—254.
Pietrzak, Joe P., to General Motors Corp. Bin with cam surfaces engageable by partition walls in inverted container. 3,398,552, 8–27–68, Cl. 62—320.
Pilloton, Roger L., to United States of America, Atomic Energy Commission. Fluidized-bed coating apparatus. 3,398,718, 8–27–68, Cl. 118—48.
Piplitz, Egon, G. Strohmeier, and K. Sedlatschek, to Schwarzkopf Development Co. Shaped bodies with high temperature strength and corrosion resistance against molten metals particularly molten iron and steels. 3,398,923, 8–27–68, Cl. 249—134.
Pizzarello, Roy A.: *See*—
De Lucia, John J., and Pizzarello. 3,399,077.
Platter, Sandford: *See*—
Mullan, Philip J., and Platter. 3,398,870.
Podelim, Allen F., to Anzac Electronics, Inc. Transformer for high frequency currents. 3,399,340, 8–27–68, Cl. 333—33.
Podgurski, Harry H.: *See*—
Knechtel, Herbert E., and Podgurski. 3,399,085.
Podlewski, Raymond S.: *See*—
Jamrog, Robert F., and Podlewski. 3,399,152.
Polichette, Joseph: *See*—
Schneble, Frederick W., Jr., McCormack, Zeblisky, Williamson, and Polichette. 3,399,268.
Pollock, David B., and I. H. Swift, to North American Rockwell Corp. Simulator. 3,398,569, 8–27–68, Cl. 73—1.
Pontani, Andrew A. Individual and combination wheel brake mechanism. 3,398,813, 8–27–68, Cl. 188—16.
Pool, Stuart D., and E Svereika, to International Harvester Co. Snow removal device. 3,398,470, 8–27–68, Cl. 37—43.
Pope, Courtney C., to Sim-pli-ci-ty Products Corp. Fixture for back-to-back mounting of water closets. 3,398,409, 8–27–68, Cl. 4—252.
Pope, Courtney C., to Sim-pli-ci-ty Products Corp. Flow through barrel to prevent crossover in back-to-back blowout installations. 3,398,979, 8–27–68, Cl. 285—64.
Post, William C.: *See*—
Skoggard, Bruno B., and Post. 3,399,094.
Potasse & Engrais Chimiques: *See*—
Quanquin, Bernard, and Berquin. 3,398,458.
Potter, Thomas C., and G. H. Burt, to Interlake Steel Corp. Packaging machine. 3,398,675, 8–27–68, Cl. 100—7.
Poupin, Raymond, to Service d'Exploitation Industrielle des Tabacs et des Allumetts. Moving web splicing apparatus. 3,398,911, 8–27–68, Cl. 242—58.4.
Powell, James R., Jr., to United States of America, Atomic Energy Commission. Once-through liquid metal piston MHD generator. 3,399,315, 8–27–68, Cl. 310—11.
Powerdyne, Inc.: *See*—
Kerr, Charles E., Jr. 3,399,286.
Powers, Donald E.: *See*—
Banas, Conrad M., Churchill, and Powers. 3,399,341.
Praglin, Julius, R. F. Shuster, and T. J. Noveske, to Keithley Instruments, Inc. R.M.S. metering system. 3,399,348, 8–27–68, Cl. 324—96.
Prapis, Frank, and C. P. Cacioppo, to The Bendix Corp. Load current and power dissipation limiter for a direct coupled amplifier fed motor system. 3,399,335, 8–27–68, Cl. 318—434.
Prevallet, David N., and W. T. Stephens, to Borg-Warner Corp. Hydrostatic transmission. 3,398,530, 8–27–68, Cl. 60—53.
Priestman Bros. Ltd.: *See*—
Brocklebank, Norman, Richardson, and Acum. 3,398,967.
Primus-Sievert A B: *See*—
Mejyr Carl-Anker. 3,398,734.
Pritz, Peter G. Electric motor driven pump. 3,398,695, 8–27–68, Cl. 103—87.
Procter & Gamble Co., The: *See*—
Hathaway, Harley D., and Helle. 3,399,144.
Mathes, Howard E., and Hood. 3,398,661.
Watrous, Howard N. 3,398,660.
Proell, Wayne A., to Standard Oil Co. Process for analyzing the chemical composition of solid material using a high temperature illuminating flare. 3,398,632, 8–27–68, Cl. 88—14.
Prontor-Werk Alfred Gauthier, G.m.b.H.: *See*—
Starp, Franz W. R. 3,398,668.
Prospert, Jacques: *See*—
Aubertin, Charles, Lefebvre, Galaud, and Prospert. 3,399,030.
Pulliam, George R., to North American Rockwell, Corp. Magnetic materials. 3,399,072, 8–27–68, Cl 117—62.
Pullman Inc.: *See*—
Compton, Arthur M. 3,398,991.
Purcell, Edward D.: *See*—
Mutter, Walter E., and Purcell. 3,399,331.
Quackenbush John J., and H. O. Corbett, to National Distillers and Chemicals Corp. Apparatus for the extrusion of rectangular tubes of thermoplastic material. 3,398,432, 8–27–68, Cl. 18—14.
Quackenbush, John J., and H. O. Corbett, to National Distillers and Chemical Corp. Extruded thermoplastic flexible pipe and hose. 3,399,262, 8–27–68, Cl. 264—209.
Quanquin, Bernard, and Berquin, to Potasse & Engrais Chimiques. Method and means for the introduction of fluids into a rotating container. 3,398,458, 8–27–68, Cl. 34—33.
Quick, Donald Jonathan, to International Harvester Co. Base cutter height indicators for cane harvesters. 3,398,516, 8–27–68, Cl. 56—208.
Quiram, Ronald G., and G. M. Borst, to Outboard Marine, Corp. Skin diving apparatus. 3,398,878, 8–27–68, Cl. 230—56.
R. & R. Research Ltd.: *See*—
Butcher, Raymond A., and White. 3,399,271.

Rabone, George R., to United States of America, Air Force. Supersonic convergent-divergent jet exhaust nozzles. 3,398,896, 8–27–68, Cl. 239—265.41.
Rachal, Francis, and J. Cricchi, to United States of America, Air Force. Low frequency drift field oscillator. 3,399,360, 8–27–68, Cl. 331—108.
Rader, Robert R., to Wirtz Mfg. Co., Inc. Molten metal pump. 3,398,697, 8–27–68, Cl. 103—158.
Radimer, Kenneth J.: *See*—
Caropreso, Frank E., Radimer, and Hogya. 3,399,090.
Radin, Edward J.: *See*—
Nicholas, Gordon W., and Radin. 3,398,619.
Radio Broadcasting Co.: *See*—
Bonatsos, James. 3,398,664.
Radio Corp. of America: *See*—
Avins, Jack. 3,399,353.
Daniel, James W., Jr. 3,399,405.
Davis, William E. and Lee. 3,399,277.
Herman, Ralph, and Raynor. 3,398,910.
Shahbender, Rabah A. 3,399,390.
Ragan, Billie J., and V. A. Beevers. Bumper mounted spare tire carrier. 3,398,846, 8–27–68, Cl. 214—454.
Raimo, Victor H. Airway. 3,398,747, 8–27–68, Cl. 128—351.
Raivio, Rolf T. Apparatus for effecting desired registration between a pattern and a printing surface. 3,398,633, 8–27–68, Cl. 88—14.
Rakestraw, Robert G. Target with ball shiftably tethered thereto. 3,398,955, 8–27–68, Cl. 273—98.
Rand, Royden N., and G. P. Mueller, to Bausch & Lomb Inc. Electrophoresis medium using agarose and carrageenan. 3,399,127, 8–27–68, Cl. 204—180.
Randall, Jack L.: *See*—
Elliott, William I., and Randall. 3,399,368.
Randle, Hogan A.: *See*—
Gerdes, Walter F., and Randle. 3,399,133.
Ranger, Hubert O., to St. Regis Paper Co. Method and apparatus for forming reinforced edges on packaging blanks. 3,399,096, 8–27–68, Cl. 156—202.
Ransburg Electro-Coating. Corp.: *See*—
La Fave, Richard L., and Zupan. 3,398,892.
Spiller, Lester L. 3,399,075.
Rashbaum, Abraham. Toothbrush having pivotal bristle carrying members. 3,398,421, 8–27–68, Cl. 15—167.
Rasmussen, Ronald E.: *See*—
Richey, Clarence B., and Rasmussen. 3,398,799.
Rasovich, Ivan: *See*—
Missimer, George L., and Rasovich. 3,398,893.
Rathmann, Jim: *See*—
McGahee, Welbourne D. 3,398,426.
Rauhut, Michael McK., and L. J. Bollyky. 3,399,137, 8–27–68, Cl. 252—188.3.
Rave, Karl B., to Kenner Products Co. Bubble forming and projecting toy. 3,398,479, 8–27–68, Cl. 46—8.
Raynor, Raymond W.: *See*—
Herman, Ralph, and Raynor. 3,398,910.
Raytheon Co.: *See*—
Das, Dilip K., and Freedman. 3,399,086.
Reabe, Kenneth G.: *See*—
Dressler, Hans, and Reabe. 3,399,237.
Redemann, Hubert: *See*—
Schreiber, Bernard, and Redemann. 3,398,929.
Redifer, William H. Floor sanding machine with controllable motion. 3,398,490, 8–27–68, Cl. 51—177.
Redmer Air Devices, Inc.: *See*—
Redmer, Edwin A. 3,398,608.
Redmer, Edwin A., to Redmer Air Devices, Inc. Automatic machine tool. 3 398,608, 8–27–68, Cl. 77—5.
Reece, James J., and T. C. Barton, to General Steel Industries, Inc. Variable height central bearing. 3,399,006, 8–27–68, Cl. 308—137.
Reeder, Frank, and J. D. Griffiths, to Courtaulds Ltd. Crimpable fibres of acrylonitrile/N-methylol acrylamide copolymers. 3,399,177, 8–27–68, Cl. 260—85.5.
Reeves, Alec H., K. W. Cattermole, R. Kitajewski, to International Standard Electric Corp. Decoder for pulse code modulation systems of communication. 3,399,403, 8–27–68, Cl. 340—347.
Regnier, Gilbert, R. Canevari, and J.-C. Le Douarec, to Science Union et Cie, Societe Francaise de Recherche Medicale. 1-Oxa-2-oxo-3,5-diaza spiro (4,5) decanes. 3,399,192, 8–27–68, Cl. 260—240.
Reifschneider, Walter, to The Dow Chemical Co. Polysulfhydryl benzenes. 3,399,239, 8–27–68, Cl. 260—609.
Reiling, Anton J.: *See*—
Barry, Robert M., and Reiling. 3,398,422.
Reinbold, Emmett, B., to The General Tire & Rubber Co. White sidewall for butyl passenger tires. 3,398,776, 8–27–68, Cl. 152—353.
Reliance Electric and Engineering Co., The: *See*—
Chung, Jackson. 3,398,597.
Remes, Nathaniel L., and J. J. Ventura, to M&T Chemicals, Inc. Process for preparing diorgano-antimony mercaptides and carboxylates. 3,399,220, 8–27–68, Cl. 260—446.
Remmers, Gerrit, to North American Philips Co., Inc. Hydrodynamic bearings. 3,399,000, 8–27–68, Cl. 308—9.
Remmers, Gerrit, and H. Tepe, to North American Philips Co., Inc. Spiral groove bearing. 3,399,007, 8–27–68, Cl. 308—163.
Remy, Hermann, to Rowenta Metallwarenfabrik G.m.b.H. Gas lighter with electric spark ignition. 3,399,023, 8–27–68, Cl. 431—255.
Renkey, Albert L., and P. T. Troell, to Dresser Industries, Inc. Induction furnace. 3,399,267, 8–27–68, Cl. 13—30.
Resag, Klaus: *See*—
Stachel, Adolf, Nitz, Resag, and Kreiskott. 3,399,195.
Reszka, Alfons, to Teletype Corp. Sequence detection circuit. 3,399,351, 8–27–68, Cl. 328—119.
Rexall Drug and Chemical Co.: *See*—
Hosteler, Donald E. 3,399,249.

Reynders, Anton : *See*—
Kolkman, Dirk, and Reynders. 3,399,044.
Reynders, Anton, to North American Philips Co., Inc. Apparatus for feeding articles to an endless or closed path conveyor. 3,399,045, 8-27-68, Cl. 65—155.
Rheingold Breweries, Inc. : *See*—
Schickle, Ernst R. 3,398,842.
Rhoades, Edgar W., to International Harvester Co. Motor vehicle body structure. 3,398,985, 8-27-68, Cl. 296—57.
Rice, Archie H. : *See*—
Conley, Walter R., Jr., Hansen, Schilling, Evers, and Rice. 3,399,135.
Richards, B. C., & Co. Pty. Ltd. : *See*—
Richards, Cecil G. F. 3,398,763.
Richards, Cecil G. F., to B. C. Richards & Co. Pty. Ltd. Ball valve. 3,398,763, 8-27-68, Cl. 137—553.
Richards, Norman D., to North American Philips Co., Inc. Superconductive information storage devices. 3,399,388, 8-27-68, Cl. 340—173.1.
Richardson, Bert : *See*—
Brocklebank, Norman, Richardson, and Acum. 3,398,967.
Richardson-Merrell Inc. : *See*—
Roberts, Edward M. 3,399,197.
Richardson, William H., and D. Brown, to Langley Alloys, Ltd. Copper nickel alloys. 3,399,057, 8-27-68, Cl. 75—159.
Richey, Clarence B., and R. E. Rasmussen, to Massey-Ferguson, Inc. Subsoiler having adjustable wear shin. 3,398,799, 8-27-68, Cl. 172—719.
Richtzenhain, Hermann : *See*—
Vogt, Wilhelm; Janssen, Kniess, and Richtzenhain. 3,399,171.
Riddle, Lavis A. H. : *See*—
Hardy, Derek J., and Riddle. 3,398,712.
Rigolini, Venerio J., to Whitehouse Products, Inc. Photographic apparatus. 3,399,376, 8-27-68, Cl. 339—147.
Rigterink, Raymond H., to The Dow Chemical Co. O-(cyanopyridyl)O,O'-di-lower-alkyl phosphate and phosphoro thioate esters and derivatives thereof. 3,399,205, 8-27-68, Cl. 260—294.8.
Rinehart, James D., to Bell Telephone Laboratories, Inc. Amplifier distortion control by switching. 3,399,358, 8-27-68, Cl. 330—149.
Ringel, Rudolf, K. Schwenk, and H. Hablitzel, to Messrs. Volkswagenwerk Aktiengesellschaft. Outwardly opening window for motor vehicles. 3,398,483, 8-27-68, Cl. 49—34.
Rinke, Heinrich : *See*—
Rosendahl, Friedrich K., Rinke, and Oertel. 3,399,167.
Ritcey, Gordon M., and A. W. Ashbrook, to Eldorado Mining and Refining, Ltd. Separation of cobalt by liquid extraction from acid solutions. 3,399,055, 8-27-68, Cl. 75—119.
Roach, Jerome C., to The Trane Co. Refrigerant compressor. 3,398,886, 8-27-68, Cl. 230—206.
Roberts, Edward M., to Richardson-Merrell Inc. (1,3-diazacycloalkene-2-YL)alkylguanidines. 3,399,197, 8-27-68, Cl. 260—256.4.
Roberts, Gerald P. : *See*—
Willard, Miles J., Jr., and Roberts. 3,399,062.
Roberts, La Moyne, 45% to C. R. Taylor. Adjustable hitch for tractors. 3,398,975, 8-27-68, Cl. 280—468.
Robertson, P. L., Mfg. Co. Ltd. : *See*—
Ansingh, Carl H. 3,398,625.
Robertshaw Controls Co. : *See*—
Branson, Charles D. 3,399,024.
Golden, Robert L., and Shopsky. 3,398,585.
Robinson, Dan L. : *See*—
Johnson, Keith O., and Robinson. 3,398,572.
Robinson, Lawrence B., F. W. Vahldiek, and C. T. Lynch, to United States of America, Air Force. Hot pressing zirconia method. 3,399,256, 8-27-68, Cl. 264—120.
Rocher, Edouard : *See*—
Le Mehaute, Charles, and Rocher. 3,399,122.
Rockwell Mfg. Co. : *See*—
Kovats, Zoltan, Gestler, and Fisher. 3,398,577.
Rody, Jean : *See*—
Heller, Hansjorg, Rody, and Keller. 3,399,173.
Rogers, Alan B. : *See*—
Schwall, Donald V., Rogers, and Corbin. 3,399,063.
Rogers Bros. Co. : *See*—
Willard, Miles J., Jr., and Roberts. 3,399,062.
Rogers, Edward F. : *See*—
Patchett, Arthur A., Rogers, and Clark. 3,399,202.
Rogers, Edward F. : *See*—
Patchett, Arthur A., Clark, and Rogers. 3,399,203.
Rogers, Kendal T., to Varian Associates. Superconductive data storage and transmission apparatus. 3,399,396, 8-27-68, Cl. 340—173.1.
Rohde, Andreas, K.-A. Eckstein, and G. Schumann, to Industriewerk Schaeffler OHG. Antifriction bearing with cylindrical rollers. 3,399,004, 8-27-68, Cl. 308—35.
Rohm and Haas Co. : *See*—
Clemens, David H. 3,399,141.
Rohrer, Edwin H., 50% to W. T. Jones. Roll grinding machine. 3,398,489, 8-27-68, Cl. 51—32.
Rosenberger, Harold E. : *See*—
Butterfield, John V., and Rosenberger. 3,399,014.
Rolls-Royce Ltd. : *See*—
Stark, Frank H. 3,398,699.
Romanos, Nicholas D., to Combustion Engineering, Inc. Once-through steam generator having a central manifold and tube bundles of spiral tube construction. 3,398,720, 8-27-68, Cl. 122—32.
Rose, Howard L. Variable fluid impedance and systems employing same. 3,398,759, 8-27-68, Cl. 137—81.5.
Rosendahl, Friedrich K., H. Rinke, and H. Oertel, to Farbenfabriken Bayer Aktiengesellschaft. Polyurethanes stabilized with dialkyl semicarbazides or dialkyl carbazinic acid esters. 3,399,167, 8-27-68, Cl. 260—45.8.
Rothenberger, Hansjorg. Apparatus for the application of a self-adhering band to a surface. 3,399,100, 8-27-68, Cl. 156—523.
Roto-Print Machinery Corp. : *See*—
Moskowitz, Donald. 3,398,680.
Roush, Milton S., to The Garrett Corp. Sulfidation and oxidation resistant cobalt-base alloy. 3,399,058, 8-27-68, Cl. 75—170.
Rowenta Metallwarenfabrik G.m.b.H. : *See*—
Remy, Hermann. 3,399,023.
Royal Industries, Inc. : *See*—
Waldrop, Tom C. 3,398,654.
Waldrop, Tom C. 3,398,655.
Rubel, Peter A., to Cabot Corp. Process for halogenating molten metals. 3,399,029, 8-27-68, Cl. 23—93.
Rubin, Leonard R., to Engelhard Industries, Inc. Method of transporting hydrogen and apparatus therefor. 3,398,504, 8-27-68, Cl. 55—16.
Rucker Mfg. Co., The : *See*—
Corl, James A. 3,399,281.
Rudge, Harper J. : *See*—
Goodrich, Charles B., Manilla, Creager, and Rudge. 3,398,448.
Ruetenik, Howard J. Soil sterilizer apparatus. 3,398,706, 8-27-68, Cl. 111—7.
Rufer, Alfred : *See*—
Colombu, Eugene, Rufer, and Zumstein. 3,398,688.
Ruhl, Charles A. L., E. Mayer, and F. M. Hugh, to International Harvester Co. Main clutch released by engagement of steering clutch and brake. 3,398,819, 8-27-68, Cl. 192—4.
Ruter, Hans. Automatic filling valve for poultry watering troughs and the like. 3,398,927, 8-27-68, Cl. 251—228.
Ryf, Hugo : *See*—
Kuhnis, Hans H., Ryf, and Denss. 3,399,206.
SKF Industries, Inc. : *See*—
Farrell, Ronald J., Lannert, and Balsley. 3,399,008.
Saari, Walfred S., to Merck & Co., Inc. Preparation of phenylalamine compounds. 3,399,226, 8-27-68, Cl. 260—471.
Sack, Ernst T., to Maschinenfabrik Sack G.m.b.H. Sheet metal shearing machine. 3,398,621, 8-27-68, Cl. 83—454.
St. Regis Paper Co. : *See*—
Ranger, Hubert O. 3,399,096.
Saito, Koshiro : *See*—
Omoto, Tokushichi, Uchida, Ogat, Fukakusa, K. and T. Saito, Imoto, Yokoyama, and Katagiri. 3,399,098.
Saito, Teruo : *See*—
Omoto, Tokushichi, Uchida, Ogat, Fukakusa, K. and T. Saito, Imoto, Yokoyama, and Katagiri. 3,399,098.
Sakata, Yoshiaki : *See*—
Matsushita, Hideo, Minobe, and Sakata. 3,399,102.
Salame, Morris, to Monsanto Co. Non-flammable solvent systems for epoxy resin coatings. 3,399,162, 8-27-68, Cl. 260—33.2.
Salyer, Ival O., and G. L. Ball III, to Monsanto Research Corp. Vibration damping composition and laminated construction. 3,399,103, 8-27-68, Cl. 161—68.
Salyer, Ival O. : *See*—
Ball, George L., III, and Salyer. 3,399,104.
Samour, Carlos M., to The Kendall Co. Cationic latices and method of preparing same. 3,399,159, 8-27-68, Cl. 260—29.6.
Samuel, Eva L. : *See*—
Holan, George, and Samuel. 3,399,209.
Sanchez, Pascual J. M. O. Systems of retraction of folding elements in pieces of furniture, especially in tables. 3,398,704, 8-27-68, Cl. 108—79.
Sandvikens Jernberks Aktiebolag : *See*—
Karlsson, Bengt S. 3,398,446.
Sangamo Electric Co. : *See*—
Thomas, David E. 3,399,283.
Sanger, Eugen : *See*—
Balogh, Lorant, Denk, Klinkhardt, and Sanger. 3,398,507.
Sanzare, Charles P., to Brunswick Corp. Archery target with point of impact detecting and indicating means. 3,398,958, 8-27-68, Cl. 273—102.2.
Sanzare, Charles P., to Brunswick Corp. Archery range with arrow return conveyor. 3,398,959, 8-27-68, Cl. 273—102.2.
Sarbach, Ronald A. : *See*—
Brath, Peter W., Sarbach, and Smith. 3,398,815.
Sarbach, Ronald A., and R. D. Smith, to Westinghouse Air Brake Co. Load modulated combined dynamic and fluid pressure brake control system for railway cars. 3,398,993, 8-27-68, Cl. 303—20.
Sarett, Lewis H. : *See*—
Shen, Tsung-Ying, and Sarett. 3,399,198.
Sarett, Lewis H., D. R. Hoff, and D. W. Henry, to Merck & Co., Inc. Production of 2-aryl-4(5)-nitroimidazoles. 3,399,211, 8-27-68, Cl. 260—309.
Sato, Ryuichi, M. Ikeya, I. Takeishi, and I. Miyauchi, to Nippon Kikai Keiso Kaisha, Ltd. Controlled volume pumps. 3,398,691, 8-27-68, Cl. 103—38.
Saucier, Lionel H., and F. E. Meyer, to Owens-Illinois, Inc. Box end folding and stapling machine. 3,398,657, 8-27-68, Cl. 93—36.
Sauer, Clarke L. Solder holder and dispenser. 3,398,874, 8-27-68, Cl. 228—57.
Savair Products Co. : *See*—
Folmer, Frank F. 3,398,651.
Savides, Christos, and J. E. Milks, ½ to American Cyanamid Co. and ½ to Arizona Chemical Co. Antistatic agents. 3,399,178, 8-27-68, Cl. 260—89.5.
Savolainen, Unto U., to Texas Instruments, Inc. Heat-dissipating support for semiconductor device. 3,399,332, 8-27-68, Cl. 317—234.
Sawyer, David E., to Sperry Rand Corp. Photoparametric amplifier diode. 3,399,313, 8-27-68, Cl. 307—311.

Saxl, Erwin J. Heavy duty tension meter. 3,398,575, 8-27-68, Cl. 73—144.
Scanley, Clyde S., to American Cyanamid Co. Substituted trisulfonylmethanes in a method of modifying surface properties of liquids and solids. 3,399,146, 8-27-68, Cl. 252—355.
Scaramucci, Domer, to Balon Corp. Composite seat ball valve. 3,398,925, 8-27-68, Cl. 251—148.
Scaramucci, Domer, to Balon Corp. Valves and seals therefor. 3,398,926, 8-27-68, Cl. 251—172.
Schade, Gerbard : *See*—
Blaschke, Franz, and Schade. 3,399,170.
Schaefer, Robert G. : *See*—
Ballenger, William G., and Schaefer. 3,398,839.
Schafroth, Werner : *See*—
Cairatti, Anthony E. 3,398,648.
Schappert, Hans M., to Koppers Co., Inc. Preparation of polyethylene having improved optical properties. 3,399,185, 8-27-68, Cl. 260—94.9.
Scharf, Walter G. Technique for fabricating flecked metallized yarn. 3,399,070, 8-27-68, Cl. 117—4.
Schaufelberger, Roy H., and C. S. Myers, to Union Carbide Corp. Laminates of a polyolefin, a maleic acid anhydride modified olefin polymer wax and printing ink. 3,399,071, 8-27-68, Cl. 117—12.
Schayes, Raymond, and I. Kozlowitz, to Societe Anonyme, Manufacture Belge Lampes et de Materiel Electronique. Thermoluminescent dosimeter for detecting radiation having a plurality of components. 3,399,301, 8-27-68, Cl. 250—71.
Schenk, Hanspeter : *See*—
Apotheloz, Robert, Schenk, and Gelbert. 3,398,640.
Schickle, Ernst R., to Rheingold Breweries, Inc. Apparatus for transferring beer kegs from storage to a conveyor. 3,398,842, 8-27-68, Cl. 214—16.
Schierholt, Hans, to Ingersoll Milling Machine Co. Circuit breaking apparatus and method for pulse operated electronic switch. 3,399,288, 8-27-68, Cl. 219—69.
Schilling, Robert D. : *See*—
Conley, Walter R., Jr., Hansen, Schilling, Evers, and Rice. 3,399,135.
Schjeldahl, G. T., Co. : *See*—
Warzecka, Herbert B. 3,399,377.
Schmelser, Kurt, K. Lehmann, H. Ziegler, and W. Kowalski, to Knapsack Aktiengesellschaft. Apparatus for monitoring the temperature prevailing in a grate of the type used for drying and calcining shapes. 3,398,941, 8-27-68, Cl. 263—28.
Schmid & Wetzel : *See*—
Wetzel, Ludwig, and Belzner. 3,398,644.
Schmidt, Paul : *See*—
Druey, Jean, and Schmidt. 3,399,196.
Schmidt, Paul, M. Wilhelm, and K. Eichenberger, to Ciba Corp. Aminoalkyl-ethano-anthracenes. 3,399,201, 8-27-68, Cl. 260—268.
Schmitz, Christian, and W. A. Bruder, to Daimler-Benz, Aktiengesellschaft. Arrangement of nozzle bodies of hooklike fuel injection nozzles at the combustion chamber of gas-turbine drive units. 3,398,529, 8-27-68, Cl. 60—39.72.
Schneble, Frederick W., Jr., J. F. McCormick, R. J. Zeblisky, J. D. Williamson, and J. Polichette, to Photocircuits Corp. Chemical metallization and products produced thereby. 3,399,268, 8-27-68, Cl. 174—68.5.
Schott, Donald E., to Thomas C. Wilson Co., Inc. Power tool. 3,398,609, 8-27-68, Cl. 77—7.
Schouw, Arthur C., and J. R. Brown, to Hydromation Engineering Co. Magnetic separator. 3,399,134, 8-27-68, Cl. 210—42.
Schreiber, Bernard, and H. Redemann, to Linde Aktiengesellschaft. Shaft-journaling assembly for rotary machines. 3,398,929, 8-27-68, Cl. 253—39.
Schriber Co., The : *See*—
Schriber, Louis. 3,398,618.
Schriber, Louis, to The Schriber Co. Punch alignment mechanism for business forms machine. 3,398,618, 8-27-68, Cl. 83—343.
Schroeder, Clifford G. Steering wheel. 3,398,601, 8-27-68, Cl. 74—552.
Schudel, Peter : *See*—
Gut, Michel, Lamparsky, and Schudel. 3,399,244.
Schudt, Hans. Rotary piston engine, pump or other machine. 3,398,643, 8-27-68, Cl. 91—60.
Schultz, Lewis K. : *See*—
Nyman, George E., and Schultz. 3,398,580.
Schumann, Gunther : *See*—
Rohde, Andreas, Eckstein, and Schumann. 3,399,004.
Schumann, Kurt E., to Danken, Inc. Concrete pumping apparatus. 3 398,693, 8-27-68, Cl. 103—49.
Schunk, Roland : *See*—
Frank Albert, Kraushaar, Margreiter, and Schunk. 3 399,204.
Schutz, Erich, W. Hastik, M. J. W. E. Nievelstein (deceased), by M. M., and I. H. Nievelstein, heirs, to Metallgesellschaft Aktiengesellschaft. Method and apparatus for controlling sintering processes in conveyor type sintering machines. 3,399,053, 8-27-68, Cl. 75—5.
Schwall, Donald V., A. B. Rogers, and D. Corbin, to Armour and Co. Injection into poultry meat of phosphates in non-aqueous suspension. 3,399,063, 8-27-68, Cl. 99—107.
Schwartz, James W., and L. Javorik, to National Video Corp. Color kinescope mounting assembly for shifting shadow mask during thermal expansion. 3,399,319, 8-27-68, Cl. 313—85.
Schwartz, Robert T. : *See*—
Hough, Ralph L., and Schwartz. 3,399,252.
Schwarz, John Ross, *See*—
Bartik, William J., Chow, Schwarz, and Murphy. 3,399,309.
Schwarzkopf Development Co. : *See*—
Pipitz, Egon, Strohmeier, and Sedlatschek. 3,398,923.
Schwenk, Kurt : *See*—
Ringel, Rudolf, Schwenk, and Hablitzel. 3,398,483.
Sciaky, David, to Welding Research, Inc. Electrode holder for resistance welder. 3,399,289, 8-27-68, Cl. 219—86.
Science Union et Cie, Societe Francaise de Recherche Medicale : *See*—
Regnier, Gilbert, Canevari, and Le Douarec. 3,399,192.
Scientific Atlanta, Inc. : *See*—
Inman, Richard B. 3,398,500.
Scigliano, Joseph J., to Aerojet-General Corp. Castable propellant compositions containing isoolefin-diolefin copolymers. 3,399,087, 8-27-68, Cl. 149—19.
Scott, Robert K., to Dresser Industries, Inc. Precision casting. 3,399,067, 8-27-68, Cl. 106—38.3.
Sears, Roebuck and Co. : *See*—
Marino, Nicholas A. 3,398,739.
Sedlatschek, Karl : *See*—
Pipitz, Egon, Strohmeier, and Sedlatschek. 3,398,923.
Seidel, Lloyd E. Device for transporting invalids. 3,398,971, 8-27-68, Cl. 280—47.11.
Sekmakas, Kazys, and R. F. Stancl, to De Soto Chemical Coatings, Inc. Solvent-soluble, heat-hardening interpolymers consisting essentially of alkylolated acrylamides and polyethylenically unsaturated polyester resins. 3,399,153, 8-27-68, Cl. 260—21.
Selas Corporation of America : *See*—
Fleischer, Kurt W., and Breckenridge. 3,399,117.
Sellers, Walter M., Jr. Qualitative bacteria culture medium identification. 3,399,115, 8-27-68, Cl. 195—103.5.
Senard, R., et Fils : *See*—
Elineau, Hubert. 3,398,616.
Senn, Eduard. System for changing the fuel supply. 3,398,816, 8-27-68, Cl. 192—.09.
Service d' Exploitation Industrielle des Tabacs et des Allie-metts : *See*—
Poupin, Raymond. 3,398,911.
Setala, Kai M. E. Apparatus for copying body contour. 3,398,455, 8-27-68, Cl. 33—174.
Shahbender, Rabah A., to Radio Corporation of America. Integrated semiconductor diode matrix. 3,399,390, 8-27-68, Cl. 340—174.
Shalit, Shimon. Closed system irrigating apparatus for viscus organs. 3,398,743, 8-27-68, Cl. 128—231.
Shelton, Dothan L. Vibrating earth working apparatus. 3,398,798, 8-27-68, Cl. 172—1.
Shen, Tsung-Ying, and L. H. Sarett, to Merck & Co., Inc. 1-pyrimidinoyl- and 1-imidazoloyl-3-haloacetyl indoles. 3,399,198, 8-27-68, Cl. 260—256.5.
Shepherd, Jim L. : *See*—
Adams, Edward R., and Shepherd. 3,398,904.
Shepherd, Jim L. : *See*—
Adams, Edward R., Shepherd, and Placitelli. 3,398,905.
Shepherd, Jim L. : *See*—
Adams, Edward R., and Shepherd. 3,399,092.
Sheppard, Hylton F. G., and L. R. Cook. Intrauterine contraceptives. 3,398,737, 8-27-68, Cl. 128—130.
Sherbino, Ronald B. : *See*—
Maki, William M., and Sherbino. 3,399,373.
Sherritt Gordon Mines, Ltd. : *See*—
Evans, David J. I., Kunda, Hancock, and Mackiw. 3,399,050.
Shibukawa, Mitsuru : *See*—
Ohsawa, Takeyoshi, Shibukawa, and Takahashi. 3,399,114.
Shikata, Kazuo : *See*—
Azuma, Keiichi, Shikata, and Yokokawa. 3,399 184.
Shimano, Keizo, and M. Nagano, to Shimano Kogyo Kubushiki Kaisha. Driving chain tensioning device in a bicycle equipped with coaster brake and exposed speed change mechanism. 3,398,973 8-27-68, Cl. 280—236.
Shimano Kogyo Kabushiki Kaisha : *See*—
Shimano, Keizo, and Nagano. 3,398,973.
Shinga, Junshiro. Control system for motor vehicle accelerator pedal. 3,398,817, 8-27-68, Cl. 192—3.
Shirman, Jack : *See*—
Niertit, Frank, Pankotay, and Shirman. 3,399,275.
Shirode, Katsumi : *See*—
Ichikawa, Yasushi, Inai, Shirode and Ohfuka. 3,399,161.
Shone, Robert T. : *See*—
McGivern, Robert F., and Shone. 3,398,631.
Shopsky, Harvey J. : *See*—
Golden, Robert L., and Shopsky. 3,398,585.
Shuster, Ronald F. : *See*—
Praglin, Julius, Shuster, and Noveske. 3,399,348.
Sibley, Henry C., to General Signal Corp. Photosensitive systems for handling information. 3,399,305, 8-27-68, Cl. 250—209.
Siegler, Inc. : *See*—
Homler, Robert I. 3,398,986.
Siegrist, Gerald, and W. Biedermann, to J. R. Geigy A.G. Dyeing nickel chelate modified polyolefin with azomethine dyes. 3,399,027, 8-27-68, Cl. 8—31.
Siemens Aktiengesellschaft : *See*—
Vogler, Werner, Lutge, and Michael. 3,399,310.
Silberman, Samuel J. Apparatus for feeding particulate material and forming rod therefrom. 3,398,751, 8-27-68, Cl. 131—59.
Silberman, Samuel J. Apparatus for feeding particulate material and forming rod therefrom. 3,398,752, 8-27-68, Cl. 131—59.
Silverman, Daniel, to Pan American Petroleum Corp. Computing device including an electrical delay line with a plurality of taps each connected to a potentiometric network which is controlled by a strip element. 3,399,300, 8-27-68, Cl. 235—193.
Simplex Wire and Cable Co. : *See*—
Stoddard, Henry R. 3,399,270.

Sim-pli-ci-ty Products Corp.: See—
Pope, Courtney C. 3,398,409.
Pope, Courtney C. 3,398,979.
Simpson, Edward S. G.: See—
Cousens, Richard H., Osmond, Simpson, and Skinner. 3,399,163.
Sinclair Research, Inc.: See—
Du Bois, Jule J., Glover, and Buehler. 3,399,116.
Holbert, Don R. 3,398,804.
Sinkey, Vernon J.: See—
Argabright, Perry A., and Sinkey. 3,399,233.
Sjoberg, Berndt O. H.: See—
Bamberg, Peter, Ekstrom, and Sjoberg. 3,399,207.
Sklerski, Edwin J., to Parker-Kalon Corp. Machines for pinch-pointing metal screws. 3,398,413, 8-27-68, Cl. 10—9.
Skinner, Maurice W.: See—
Cousens, Richard H., Osmond, Simpson, and Skinner. 3,399,163.
Skoggard, Bruno B., and W. C. Post, to American Cyanamid Co. Method for forming tubular reinforced plastic members. 3,399,094, 8-27-68, Cl. 156—79.
Slade, Herbert J. Rod case. 3,399,009, 8-27-68, Cl. 312—244.
Slayman, Charles J.: See—
Latter, Bruce B., and Slayman. 3,398,553.
Sliepcevich, Cedomir M., and H. T. Hashemi, 37½% to University Engineers, Inc., and 62½% to E-C Corp. Process for recovering relatively pure water from saline solutions. 3,398,547, 8-27-68, Cl. 62—58.
Slominski, Leo J., to Mac Dermid Inc. Method of stripping nickel from articles and the composition used therein. 3,399,143, 8-27-68, Cl. 252—79.2.
Smalling, Charles E., to Black Sivalls & Bryson, Inc. Method and system for vaporizing and superheating cryogenic fluids. 3,398,723, 8-27-68, Cl. 122—356.
Smidth, F. L., & Co.: See—
Foeg, Mogens H. 3,398,942.
Smith, Clark W. Airplane hangar. 3,398,843, 8-27-68, Cl. 214—16.1.
Smith, Eric, to Olin Mathieson Chemical Corp. Process for preparing 2,4,4,4-tetrachlorobutanol from allyl alcohol and CCl_4 in the presence of powdered iron catalyst. 3,399,241, 8-27-68, Cl. 260—633.
Smith, James W., and R. A. Gowen, to The Electric Reduction Co. Method of heat exchange with high viscosity liquids. 3,398,784, 8-27-68, Cl. 165—1.
Smith Kline & French Laboratories: See—
Hoover, John R. E., and Stedman. 3,399,212.
Smith, Michael D.: See—
Evans, Evan W., and Smith. 3,399,059.
Smith, Perrin F., to International Business Machines Corp. Cyclical random access magnetic data storage system. 3,399,394, 8-27-68, Cl. 340—174.1.
Smith, Robert D.: See—
Brath, Peter W., Sarbach, and Smith. 3,398,815.
Sarbach, Ronald A., and Smith. 3,398,993.
Smith, Robert D., to Westinghouse Air Brake Co. Anti-skid wheel control system for railway cars. 3,398,994, 8-27-68, Cl. 303—21.
Smith, Walter E. Musical instruments. 3,398,622, 8-27-68, Cl. 84—267.
Smith, Walter E. Musical instruments. 3,398,623, 8-27-68, Cl. 84—267.
Smykal, Robert C., Jr., and J. F. McMahon, Jr.; said McMahon, assor. to said Smykal. Heat exchanger apparatus. 3,398,722, 8-27-68, Cl. 122—250.
Snow, Gerald A., and H. A. Doughty, to United Industrial Syndicate, Inc. Egg cartons. 3,398,875, 8-27-68, Cl. 229—2.5.
Snow, Kenneth A.: See—
Livesey, Donald V., and Snow. 3,398,935.
Societe Anonyme Andre Citroen: See—
Cadiou, Jean G. 3,398,486.
Societe Anonyme, Manufacture Belge Lampes et de Materiel Electronique: See—
Schayes, Raymond, and Kozlowitz. 3,399,301.
Societe Aquitaine-Organico: See—
Genas, Michailas, and Kern. 3,399,034.
Societe Civile de Recherches et d'Etudes Industrielles: See—
Vincens, Rene. 3 398,981.
Societe Nationale des Petroles d'Aquitaine: See—
Maurice, Jacques, Pflugfelder, Peyrot, and Didelot. 3,399,038.
Sodtke, Wolfgang E., to Loewe Opta G.m.b.H. Transformerless push-pull transistor amplifier with feedback. 3,399,354, 8-27-68, Cl. 330—13.
Sommer, Hans, H. Bestian, and D. Bergmann, to Farbwerke Hoechst Aktiengesellschaft vormals Meister Lucius & Bruning. Recovery of fibrous material from waste waters of the paper, cardboard and cellulose industry by addition of condensation of urea and an alkylene. 3,399,110, 8-27-68, Cl. 162—190.
Sonic Engineering Corp.: See—
McCarthy, William W. 3,399,031.
Soulakis, George, to Spectrol Electronics Corp. Potentiometer having housing formed of electrically non-conductive material including integral hinge section and method of making the same. 3,399,369, 8-27-68, Cl. 338—180.
Spandorfer, Lester M., to Sperry Rand Corp. Interconnection network. 3,399,380, 8-27-68, Cl. 340—147.
Sparling, Clarence D. Toilet seat safety rails. 3,398,410, 8-27-68, Cl. 4—254.
Spectrol Electronics Corp.: See—
Soulakis, George. 3,399,369.
Sperry Rand Corp.: See—
Barrosse, Jerrold P. 3,399,391.
Bartik, William J., Chow, Schwarz, and Murphy. 3,399,309.
Belson, Henry S. 3 399,361.
Sawyer, David E. 3,399,313.
Spandorfer, Lester M. 3,399,380.
Wellerstein, Ira M. 3,399,357.
Spiller, Lester L., to Ransburg Electro-Coating Corp. Coating compositions in nonpolar vehicles having additive for adjusting electrical properties and method of using. 3,399,075, 8-27-68, Cl. 117—93.4.
Spindeler, Heinz, to Dr. C. Otto & Comp. G.m.b.H. Apparatus for mechanically cleaning door frames of horizontal coke ovens. 3,398,416, 8-27-68, Cl. 15—93.
Sproule, Robert S., to Dominion Engineering Works, Ltd. Rotary hydraulic machines. 3,398,696, 8-27-68, Cl. 103—103.
Spyra, Rudolf A. Orienting mechanism. 3,398,824, 8-27-68, Cl. 198—33.
Stachel, Adolf, R.-E. Nitz, K. Resag, and H. Kreiskott, to Cassella Farbwerke Mainkur Aktiengesellschaft. Theophylline derivatives. 3,399,195, 8-27-68, Cl. 260—256.
Staff, Charles H.: See—
Bernetti, Raffaele, Staff, and Watson. 3,399,081.
Stafford, Thomas S.: See—
Crockett, Peter N., Krygowski, and Stafford. 3,399,384.
Stahr, Peter A.: See—
White, Daniel L., and Stahr. 3,398,600.
Staib, Paul: See—
Krebs, Edouard, and Staib. 3,399,131.
Stamicarbon N.V.: See—
Evers, Johannes J. M., and Bos. 3,399,168.
Stancl, Roland F.: See—
Sekmakas, Kazys, and Stancl. 3,399,153.
Standard Oil Co.: See—
Hansen, Clarence M., and Ott. 3,398,542.
Proell, Wayne A. 3,398,632.
Tapulionis, Meliute O. 3,399,227.
Stark, Frank H., to Rolls-Royce Ltd. Reciprocating fluid displacement device. 3,398,699, 8-27-68, Cl. 103—173.
Starp, Frank W. R., to Alfred Gauthier Prontor-Werk G.m.b.H. Automatic photographic shutter. 3,398,668, 8-27-68, Cl. 95—53.
Start, Ernest, and R. Blood, to William Cotton Ltd. Straight bar knitting machines. 3,398,554, 8-27-68, Cl. 66—89.
Stauffer Chemical Co.: See—
Szabo, Karoly. 3,399,265.
Stedman, Robert J.: See—
Hoover, John R. E., and Stedman. 3,399,212.
Steelcraft Mfg. Co., The: See—
Frederick, Claud, Jr. 3,398,482.
Stein, Wolfgang J.: See—
Ainsworth, Richard, and Stein. 3,398,605.
Steinberg, Solomon. Automatic system for web length measurement. 3,398,454, 8-27-68, Cl. 33—132.
Steinfeld, Manfred: See—
Taylor, William P., and Steinfeld. 3,398,867.
Stelux Mfg. Co., Ltd.: See—
Meng, Ng C. 3,398,523.
Stelzer, Carl, to Hayni-Werke Koerber and Co. K.G. Method and apparatus for assembling mouthpieces with tobacco rods. 3,398,753, 8-27-68, Cl. 131—88.
Stender, Orville J., to Conlon-Moore Corp. Metal foundry layout using permanent molds. 3,398,783, 8-27-68, Cl. 164—348.
Stephens, William T.: See—
Prevallet, David N., and Stephens. 3,398,530.
Stevens, Donn E.: See—
Esmay, Edward N., Jackson, and Stevens. 3,398,637.
Stevenson, Paul D.: See—
Egbert, Earl L., Stevenson, and Sundberg. 3,398,532.
Stewart, David B.: See—
Stewart, William R. and D. B. 3,398,437.
Stewart, William R. and D. B., to Wm. R. Stewart & Sons (Hackelmakers) Ltd. Faller bar for fibre preparation machine. 3,398,437, 8-27-68, Cl. 19—129.
Stewart, Wm. R., & Sons (Hackelmakers) Ltd.: See—
Stewart, William R. and D. B. 3,398,437.
Stoddard, Henry R., to Simplex Wire and Cable Co. Terminal for cable comprising a plurality of sheathed conductors. 3,399,270, 8-27-68, Cl. 174—90.
Stoessel, Henry K., and T. Newbery. Drinking straw and tone generator. 3,398,624, 8-27-68, Cl. 84—330.
Stokes, William H., to United States Steel Corp. Overhead door supporting hinge mechanism. 3,398,485, 8-27-68, Cl. 49—202.
Stolins, Arthur B., Jr., to Philco-Ford Corp. Fluid flow nozzle having temperature compensating means. 3,398,536, 8-27-68, Cl. 60—253.
Stoltman, Donald D., to General Motors Corp. Carburetor. 3,398,937, 8-27-68, Cl. 261—23.
Stone, David W., to Harnischfeger Corp. Electrical control circuit for converting alternating current to adjustable magnitude direct current. 3,399,337, 8-27-68, Cl. 321—5.
Storey, Robert M. Rivet cover pad. 3,398,626, 8-27-68, Cl. 85—50.
Strang, Elmer J., to The Coats Co., Inc. Stop limit means for power operated tire changer. 3,398,777, 8-27-68, Cl. 157—1.28.
Strazdins, Edward, and R. L. Webb, to American Cyanamid Co. Stable adjuvant emulsion compositions comprising the hydrated reaction products of a metallic cation and a fatty acid. 3,399,263, 8-27-68, Cl. 424—88.
Stresino, Edgar F.: See—
Eschenbach, Richard C., and Stresino. 3,399,253.
Strick Corp.: See—
Martin, John J. 3,398,922.
Strodel, Robert C.: See—
Carter, John W., Landen, Miller, and Anderson. 3,399,378.
Strohmeier, Gerolf: See—
Pipitz, Egon, Strohmeier, and Sedlatschek. 3,398,923.
Strojosvit Narodni Podnik: See—
Dokoupil, Jiri, Oplustil, Zdrahal, and Zubik. 3,398,557.

Stromberg-Carlson Corp.: See—
Niertit, Frank, Pankotay, and Shirman. 3,399,275.
Struthers Wells Corp.: See—
Bevevino, James W. 3,398,787.
Stuetzer, Otmar M., to Litton Systems, Inc. Ion drag pumps. 3,398,685, 8-27-68, Cl. 103—1.
Styblo, Rudolf: See—
Carniol, Bohdan, and Styblo. 3,398,579.
Subovici, Vadim. Process for making wound magnetic core. 3,398,450, 8-27-68, Cl. 29—605.
Suggs, Alfred M., to General Motors Corp. Fuel heating apparatus. 3,398,692, 8-27-68, Cl. 103—42.
Summit-General Industries, Inc.: See—
Lucka, Eugene R. 3,399,400.
Sunbeam Corp.: See—
Morton, William A. 3,398,939.
Sundberg, Wayne D.: See—
Egbert, Earl L., Stevenson, and Sundberg. 3,398,532.
Sundquist, Charles T. Foot operated gas pumps. 3,398,885, 8-27-68, Cl. 230—191.
Suzuki, Masaaki: See—
Hosokawa, Kenjiro, Kojima, Mori, and Suzuki. 3,399,186.
Suzuki, Yasuo: See—
Miioshiba, Tomoyoshi, Hori, Ishizawa, and Suzuki. 3,399,125.
Sverelka, Edward: See—
Pool, Stuart D., and Sverelka. 3,398,470.
Swanson, William C., D. W. Moyer, and R. W. Asmus, to International Harvester Co. Mechanical feathering control and automatic overspeed control for a hydrostatic transmission. 3,398,531, 8-27-68, Cl. 60—53.
Swihart, Donald E., to Monsanto Research Corp. Thermoelectric body including pyrolized reaction product of pyromellitonitrile and alkanol and with comminuted metal. 3,399,083, 8-27-68, Cl. 136—236.
Sweeney, Charles: See—
Guba, Peter, and Sweeney. 3,398,900.
Swift, Irvin H.: See—
Pollock, David B., and Swift. 3,398,569.
Swineford, Forest J.: See—
Hudson, John E., and Swineford. 3,398,755.
Sylvania Electric Products Inc.: See—
Brown, Barry S. 3,399,324.
De Lisle, William E. 3,399,350.
Gray, Stephen B. 3,399,312.
Peters, Charles J. 3,399,012.
Szabo, Karoly, to Stauffer Chemical Co. Killing insects by applying N-methyl metaalkylamidophenyl carbonates. 3,399,265, 8-27-68, Cl. 424—300.
Szodfridt, Imre, and O. Hausinger, to Firma Dr. Ing. h.c.F. Porsche K.G. Torque converter, clutch, transmission and motor control. 3,398,603, 8-27-68, Cl. 74—645.
TRW Inc.: See—
Nemy, Alfred S. 3,398,444.
Taft, Earl M., to Varian Associates. Flame ionization detector. 3,399,039, 8-27-68, Cl. 23—254.
Takahashi, Hideomi: See—
Ohsawa, Takeyoshi, Shibukawa, and Takahashi. 3,399,114.
Takata, Harry H., W. D. Tuggle, and A. O. Williamson, to Bros Inc. Vehicle for spreading pulverant material on a ground surface. 3,398,662, 8-27-68, Cl. 94—39.
Tamaoki, Kazuo: See—
Katsumura, Toru, Morita, Ozeki, Tamaoki, and Mori. 3,398,484.
Takeishi, Isamu: See—
Sato, Ryuichi, Ikeya, Takeishi, and Miyauchi. 3,398,691.
Tamura, Zensuke, and Y. Hishinuma, to Hitachi, Ltd. Method of and apparatus for desulfurizing industrial waste gases. 3,398,509, 8-27-68, Cl. 55—73.
Tanaka Engineering Works, Ltd.: See—
Goto, Shinkichi, and Ushioda. 3,398,943.
Tapulionis, Meliute O., to Standard Oil Co. Recovery of purified dimethyl terephthalate from mother liquor stripper bottoms. 3,399,227, 8-27-68, Cl. 260—475.
Tarama, Kimio, Y. Kobayashi, and K. Hattori, to Nippon Carbide Kogyo Kabushiki Kaisha. Process for producing aromatic nitriles. 3,399,225, 8-27-68, Cl. 260—465.
Taub, David: See—
Wendler, Norman L., and Taub. 3,399,242.
Taylor, Charles R.: See—
Roberts, La Moyne 3,398,975.
Taylor, Heather M. Data processor profitability monitoring apparatus. 3,399,298, 8-27-68, Cl. 235—92.
Taylor, John, to Beckman Instruments, Inc. Scanner assembly with automatically reciprocating photoelectric transducer having adjustable slit. 3,399,308, 8-27-68, Cl. 250—235.
Taylor, Ronald J., and R. M. Dumke, to United States of America, Air Force. Corrugated wall radiation cooled combustion chamber. 3,398,527, 8-27-68, Cl. 60—39.66.
Taylor, William P., and M. Steinfeld, said Taylor assor. to said Steinfeld. Necktie holding device for use with clothes hanger. 3,398,867, 8-27-68, Cl. 223—87.
Techno-Components, Inc.: See—
Tumbusch, Edward H. 3,399,367.
Tee-Pak, Inc.: See—
Bridgeford, Douglas J. 3,399,069.
Teledyne, Inc.: See—
Thomas, Maurice B. 3,398,541.
Wiesler, Mordechai. 3,399,363.
Teleflex, Inc.: See—
White, Daniel L., and Stahr. 3,398,600.
Teletype Corp.: See—
Arko, Robert E. 3,398,591.
Reszka, Alfons. 3,399 351.
Madsen, Berthel F. 3,399,274.
Telefonaktiebolaget L. M. Ericsson: See—
Edstrom, Nils H. 3,399,280.
Tendler, Anton. Anchor bolts. 3,398,627, 8-27-68, Cl. 85—71.
Teodor, Danila, P. Titus, and Z. Gheorghe. Arrange for reducing locally generated radio frequency interference. 3,399,325, 8-27-68, Cl. 315—27.
Tepe, Henri: See—
Remmers, Gerrit, and Tepe. 3,399,007.
Tesla, narodin podnik: See—
Carniol, Bohdan, and Styblo. 3,398,579.
Tevonian, Ronald: See—
Gorman, James E. Green, and Tevonian. 3,399,385.
Texas Instruments Inc.: See—
Burg, Kenneth E. 3,398,715.
Haderer, Edward G. 3,399,285.
Savolainen, Unto U. 3,399,332.
Theobald, Calvin C.: See—
Theobald, Harry A. and C. C. 3,398,676.
Theobald, Harry A. and C. C. 3,398,677.
Theobald, Harry A. and C. C. Apparatus and method for rendering animal materials. 3,398,676, 8-27-68, Cl. 100—37.
Theobald, Harry A. and C. C. Apparatus and methods for rendering animal materials and products produced thereby. 3,398,677, 8-27-68, Cl. 100—37.
Thiara, Dalel S.: See—
Kulka, Marshall, Thiara, and Harrison. 3,399,214.
Thieben, Richard R. Heated insulated glass window structure. 3,399,294, 8-27-68, Cl. 219—522.
Thiokol Chemical Corp.: See—
Christian, Charles M. and Kruse. 3,399,088.
Thomas, David E., to Sangamo Electric Co. Manually controlled electric time switch. 3,399,283, 8-27-68, Cl. 200—39.
Thomas, Edward C., to Great Lakes Carbon Corp. Graphite heating element assembly and furnaces containing same. 3,399,266, 8-27-68, Cl. 13—20.
Thomas, Maurice B., to Teledyne, Inc. Free flooding ballast system for offshore drilling rigs. 3,398,541, 8-27-68, Cl. 61—46.5.
Thompson, Charley L., Jr.: See—
Best, Willie H., Thompson, and Woodward. 3,398,459.
Thompson, David L. Scrubber apparatus. 3,398,513, 8-27-68, 55—449.
Thompson, George D. Holder for rolled material. 3,398,908, 8-27-68 Cl. 242—55.2.
Thompson, Mel W. Blocking machine comprising pivotally mounted, spring biased blocking arm. 3,398,953, 8-27-68, Cl. 273—55.
Thron, John E., and T. O. Holtey, to Honeywell, Inc. Data transfer system. 3,399,382, 8-27-68, Cl. 340—172.5.
Tischler, Henry J.: See—
Lynn, Harry P., and Tischler. 3,398,987.
Titus, Piesolanu: See—
Teodor, Danila, Titus, and Gheorghe. 3,399 325.
Tjerneld, Stig, and O. Hook, to Aktiebolaget Stille-Werner. Device for the tapping of urine and similar purposes. 3,398,745, 8-27-68, Cl. 128—295.
Tobacman, Leo: See—
Kantz, Herbert W., and Tobacman. 3 398,884.
Toben, Robert L. Multilevel boat harbor. 3,398,540, 8-27-68, Cl. 61—46.
Tokar, Gerald. Nursing bottle holding device. 3,398,919, 8-27-68, Cl. 248—103.
Tokuyama Soda Kabushiki Kaisha: See—
Azuma, Keiichi, Shikata, and Yokokawa. 3,399,184.
Tolkmith, Henry: See—
Budde, Paul B., and Tolkmith. 3,399,210.
Tom, Theodore K.: See—
James, Brian D., and Tom. 3,398,879.
Tompkins, James F., Jr. 3,399,036.
Toms River Chemical Corp.: See—
Illy, Hugo. 3,399,028.
Toogood & Jones Ltd.: See—
Cleary, James S. 3,398,614.
Torbin, Milton A.: See—
Berger, Morris M., Blumenfeld, and Torbin. 3,399,165.
Torresen, Robert: See—
Conklin, Robert M., and Torresen. 3,398,952.
Town, Joseph W., to United States of America, Interior. Crystallization of tungsten disulfide from molten slags. 3,399,033 8-27-68, Cl. 23—134.
Towns, Edward J. Container and safety closure therefor. 3,398,847, 8-27-68, Cl. 215—9.
Toyo Rubber Industry Co., Ltd., The: See—
Matsushita, Hideo, Minobe, and Sakata. 3,399 102.
Tracy, John A., to The Loewy Engineering Co. Ltd. Control of prestressed rolling mills. 3,398,559, 8-27-68, Cl. 72—8.
Trageser, Ludwig. Clamping device for jacquard cards. 3,398,767, 8-27-68, Cl. 139—317.
Trane Co., The: See—
Roach, Jerome C. 3,398,886.
Traynor, Lee, and J. S. Eden, to The B. F. Goodrich Co. Oxydehydrogenation of olefins. 3,399,246, 8-27-68, Cl. 260—680.
Trefil, James, to Crane Co. Stuffing box. 3,398,964, 8-27-68, Cl. 277—21.
Triplem Co., Inc., The: See—
Willis, John A. 3,398,862.
Troell, Peter T.: See—
Renkey, Albert L., and Troell. 3,399,267.
Trofan Powder Co.: See—
Griffith, George L. 3,399,089.
Tryon, John G.: See—
Githens, John A., and Tryon. 3,399,404.
Tsubakimoto Chain Mfg. Co., Ltd., The: See—
Matsumoto, Mikio. 3,398,990.

Yokoyama, Kishizu: See—
Omoto, Tokushichi, Uchida, Ogata, Fukakusa, Saito, Imoto, Yokoyama, and Katagiri. 3,399,098.
Yoneda, Rikizo. Pipe coupling. 3,398,977, 8-27-68, Cl. 285—45.
Yoshikawa, Yutaka. Pump device. 3,398,687, 8-27-68, Cl. 103—5.
Young, Donald C., to Union Oil Co. of California. Method of preparing ammonium phosphate solids. 3,399,032, 8-27-68, Cl. 23—107.
Young, Niels O., to Block Engineering, Inc. Method of forming a rigid loop from a limp loop. 3,398,949, 8-27-68, Cl. 272—8.
Young, Ralph B., to Bausch & Lomb, Inc. Metallurgical microscope objective. 3,399,016, 8-27-68, Cl. 350—214.
Young Spring & Wire Corp.: See—
Lynn, Harry P., and Tischler. 3,398,987.
Zangl, Karl. Continuous flow heater for liquids. 3,398,721, 8-27-68, Cl. 122—33.
Zdráhal, Jiří: See—
Dokoupil, Jiří, Oplůstil, Zdráhal, and Zubik. 3,398,557.
Zaslowsky, Joel A., to Olin Mathieson Chemical Corp. Catalyst system for reaction of an allyl alcohol and carbon tetrachloride to produce 2,4,4,4-tetrachlorobutanol. 3,399,217, 8-27-68, Cl. 260—348.6.
Zavody presneho strojirenstvi Gottwaldov, narodni podnik: See—
Vlcek, Josef, Fimbinger, and Pavelka. 3,398,433.
Zeblisky, Rudolph J.: See—
Schneble, Frederick W., Jr., McCormack, Zeblisky, Williamson, and Polichette. 3,399,268.
Zeiss-Heidenheim, Carl: See—
Heingiger, Wilfred. 3,399,011.
Zeiss-Stiftung, Carl: See—
Bohmel, Berthold, and Hornschu. 3,399,010.
Zeldin, July R. Device for centering continuously moving fabric. 3,398,869, 8-27-68, Cl. 226—23.
Zenkner, Kurt. Crossflow blower. 3,398,882, 8-27-68, Cl. 230—125.
Zernow, Louis, and J. Edberg, to Aerojet-General Corp. Apparatus for forming material. 3,398,561, 8-27-68, Cl. 72—56.
Ziegler, Hans-Werner: See—
Schmelser, Kurt, Lehmann, Ziegler, and Kowalski. 3,398,941.
Zimmerman, Robert L., and L.-H. Lee, to The Dow Chemical Co. Epoxy modified vinyl copolymers of α,β-unsaturated dicarboxylic acid partial esters. 3,399,109, 8-27-68, Cl. 161—184.
Zimmerman, William: See—
Griffin, Robert E., and Zimmerman. 3,398,586.
Zimmon & Co., Inc.: See—
Zimmon, Harold. 3,399,329.
Zimmon, Harold, to Zimmon & Co., Inc. Sanitary and protective covering for shoes. 3,399,329, 8-27-68, Cl. 317—2.
Zinser-Textilmaschinen Gesellschaft mit beschrankter Haftung: See—
Haussmann, Gerhard. 3,398,519.
Ziolko, Francis, to Johnson & Johnson. Method for manufacturing casing from a continuous tube. 3,399,066, 8-27-68, Cl. 99—176.
Zobel, Walter, to United States of America, Atomic Energy Commission. Apparatus for regulating at low temperatures. 3,398,549, 8-27-68, Cl. 62—129.
Zoschak, Robert J.: See—
Wolowodiuk, Walter, and Zoschak. 3,398,789.
Zubik, Jiří: See—
Dokoupil, Jiří, Oplůstil, Zdráhal, and Zubik. 3,398,557.
Zumstein, Andre: See—
Colombus, Eugene, Rufer, and Zumstein. 3,398,688.
Zupan, Norbert M.: See—
La Fave, Richard L., and Zupan. 3,398,892.
Zweig, Arnold, to American Cyanamid Co. Electrochemiluminescence of 2,3,6,7-tetraphenylisobenzofuran and related materials. 3,399,328, 8-27-68, Cl. 315—246.

CLASSIFICATION OF PATENTS

ISSUED AUGUST 27, 1968

NOTE.—First number, class; second number, subclass; third number, patent number

2– 2.5	3,398,406	43– 44.4	3,398,477	71–123	3,399,049	88– 24	3,398,637	117– 4	3,399,070	156–583	3,399,097
211	3,398,407	58	3,398,478	72– 8	3,398,559		3,398,638	12	3,399,071	157– 1.28	3,398,777
4– 7	3,398,408	44– 73	3,399,041	12	3,398,560	89– 1.806	3,398,639	62	3,399,072	160– 45	3,398,778
252	3,398,409	46– 8	3,398,479	56	3,398,561	.813	3,398,640	.1	3,399,073	243	3,398,779
254	3,398,410	244	3,398,480	215	3,398,562	90– 13	3,398,641	64	3,399,074	161– 5	3,399,101
5– 67	3,398,411	47– 58	3,398,481	221	3,398,563	.1	3,398,642	93.4	3,399,075	14	Re.26,444
8– 4	3,399,025	49– 8	3,398,482	243	3,398,564	91– 60	3,398,643	121	3,399,076	64	3,399,102
25	3,399,026	34	3,398,483	250	3,398,566	138	3,398,644		3,399,077	68	3,399,103
31	3,399,027	138	3,398,484	400	3,398,567	173	3,398,645	129	3,399,078		3,399,104
55	3,399,028	202	3,398,485	421	3,398,568	217	3,398,646	138.8	3,399,079	102	3,399,105
156	3,398,412	209	3,398,486	453	3,398,565	384	3,398,647	155	3,399,080	119	3,399,106
10– 9	3,398,413	239	3,398,487	73– 1	3,398,569	417	3,398,648	118– 7	3,398,717	160	3,399,107
12–126	3,398,414	350	3,398,488	4	3,398,570	420	3,398,649	48	3,398,718	173	3,399,108
133	3,398,415	51– 32	3,398,489	12	3,398,571	421	3,398,650	119– 26	3,398,719	184	3,399,109
13– 20	3,399,266	177	3,398,490		3,398,572	92– 27	3,398,651	122– 32	3,398,720	162–190	3,399,110
30	3,399,267	52– 90	3,398,491	49.5	3,398,573	165	3,398,652	33	3,398,721	199	3,399,111
15– 93	3,398,416	115	3,398,492	52	3,398,574	178	3,398,653	250	3,398,722	164– 49	3,398,780
104.19	3,398,417	230	3,398,493	144	3,398,575	241	3,398,654	356	3,398,723	228	3,398,781
105	3,398,418	371	3,398,494	205	3,398,576		3,398,655	123– 8	3,398,724	336	3,398,782
111	3,398,419	442	3,398,495	231	3,398,577	93– 13	3,398,656	16	3,398,725	348	3,398,783
150	3,398,420	463	3,398,496	304	3,398,578	36	3,398,657	32	3,398,726	165– 1	3,398,784
167	3,398,421	665	3,398,497	342	3,398,579	.01	3,398,658	44	3,398,727	29	3,398,785
180	3,398,422	691	3,398,498	359	3,398,580	44.1	3,398,659	56	3,398,728	55	3,398,786
306	3,398,423	731	3,398,499	379	3,398,581	49	3,398,660	139	3,398,729	81	3,398,787
16– 80	3,398,424	53– 22	3,398,500	398	3,398,582	52	3,398,661		3,398,730	120	3,398,788
150	3,398,425	35	3,398,501	416	3,398,583	94– 39	3,398,662	198	3,398,731	134	3,398,789
169	3,398,426	135	3,398,502	418	3,398,584	45	3,398,663	126– 9	3,398,732	166– .5	3,398,790
18– 5	3,398,427	187	3,398,503	74– 3.54	3,398,585	95– 14	3,398,664	25	3,398,733	9	3,398,791
	3,398,428	55– 16	3,398,504	5.34	3,398,586	45	3,398,665	38	3,398,734		3,398,792
8	3,398,429		3,398,505	15.63	3,398,587		3,398,666	191	3,398,735	39	3,398,793
12	3,398,430	23	3,398,506	50	3,398,588	53	3,398,667	127– 71	3,399,081	67	3,398,794
13	3,398,431	55	3,398,507	77	3,398,589		3,398,668	128– 2	3,398,740	120	3,398,795
14	3,398,432	71	3,398,508	89.14	3,398,590	73	3,398,669	.05	3,398,736		3,398,796
17	3,398,433	73	3,398,509	142	3,398,591	85	3,398,670	57	3,398,741	170–160.56	3,398,797
19	3,398,434	163	3,398,510	198	3,398,592	96– 1.4	3,399,060	75	3,398,742	172– 1	3,398,798
30	3,398,435	290	3,398,511	230.17	3,398,593	98– 60	3,398,671	130	3,398,737	719	3,398,799
	3,398,436	386	3,398,512	333	3,398,594	99– 71	3,399,061	231	3,398,743	753	3,398,800
19– 57	Re.26,446	449	3,398,513	409	3,398,595	100	3,399,062	283	3,398,744	173– 16	3,398,801
129	3,398,437	56– 25.4	3,398,514	413	3,398,596	107	3,399,063	295	3,398,745	16	3,398,802
23– 93	3,399,029	63	3,398,515	421	3,398,597	144	3,399,064	303.1	3,398,738	174– 45	3,399,269
102	3,399,030	208	3,398,516	424.8	3,398,598	159	3,399,065	340	3,398,746	68.5	3,399,268
107	3,399,031	295	3,398,517	441	3,398,599	176	3,399,066	351	3,398,747	90	3,399,270
	3,399,032	57– 34	3,398,518	501	3,398,600	407	3,398,672	465	3,398,748	175– 4.52	3,398,803
134	3,399,033	52	3,398,519	552	3,398,601	408	3,398,673	513	3,398,749	61	3,398,804
139	3,399,034	53	3,398,520	574	3,398,602	100– 1	3,398,674	529	3,398,739	176– 79	3,399,112
149	3,399,035		3,398,521	645	3,398,603	7	3,398,675	131– 25	3,398,750	177– 80	3,398,805
205	3,399,036		3,398,522	688	3,398,604	37	3,398,676	59	3,398,751	178– 6	3,399,271
230	3,399,037	59– 80	3,398,523	720.5	3,398,605		3,398,677		3,398,752	.6	3,399,272
254	3,399,038	60– 29	3,398,524	759	3,398,606	53	3,398,679	88	3,398,753	22	3,399,273
	3,399,039	39.17	3,398,525	864	3,398,607	101– 38	3,398,678	143	3,398,754	33	3,399,274
258.5	3,399,040	.28	3,398,526	75– .5	3,399,050	115	3,398,680	134– 58	3,398,755	179– 1	3,399,275
24– 7	3,398,438	.66	3,398,527		3,399,051	216	3,398,681		3,398,756		3,399,276
	3,398,439	.71	3,398,528		3,399,052	102– 38	3,398,682	136–203	3,399,082		3,399,277
274	3,398,440	.72	3,398,529	5	3,399,053	39	3,398,683	236	3,399,083	15	3,399,278
28– 72	3,398,441	5	3,398,532	80	3,399,054	49.3	3,398,684	137– 38	3,398,757	18	3,399,279
29– 78	3,398,442	53	3,398,530	119	3,399,055	103– 1	3,398,685	81.5	3,398,758		3,399,280
149.5	3,398,443		3,398,531	159	3,399,056		3,398,686		3,398,759	180– 2	3,398,806
159.2	3,398,444	57	3,398,533		3,399,057	5	3,398,687	155	3,398,760	64	3,398,807
203	3,398,445	95	3,398,534	170	3,399,058	11	3,398,688	312	3,398,761	79.2	3,398,808
212	3,398,446	226	3,398,535	175.5	3,399,059		3,398,689	495	3,398,762	119	3,398,809
407	3,398,447	253	3,398,536	77– 5	3,398,608	25	3,398,690	553	3,398,763	181– .5	3,398,810
420.5	3,398,448	254	3,398,537	7	3,398,609	38	3,398,691	614	3,398,764	33	3,398,811
529	3,398,449	267	3,398,538	42	Re.26,447	42	3,398,692	138– 39	3,398,765	188– 1	3,398,812
605	3,398,450	61– 2	3,398,539	81– 9.5	3,398,610	49	3,398,693	139–217	3,398,766	16	3,398,813
30–186	3,398,451	46	3,398,540	52.4	3,398,611	87	3,398,694	317	3,398,767	78	3,398,814
33– 18	3,398,452	.5	3,398,541	54	3,398,612		3,398,695	140–147	3,398,768	195	3,398,815
46	3,398,453	72.2	3,398,542	83– 3	3,398,613	103	3,398,696	141–293	3,398,769	190– 41	Re.26,443
132	3,398,454	62– 11	3,398,543	32	3,398,614	158	3,398,697	143– 32	3,398,770	191– 23	3,399,281
174	3,398,455	12	3,398,544	49	3,398,615	161	3,398,698	38	3,398,771	192– .09	3,398,816
	3,398,456	17	3,398,545	305	3,398,616	173	3,398,699	159	3,398,772	3	3,398,817
34– 10	3,398,457	28	3,398,546	331	3,398,617	105–182	3,398,700	144– 28.1	3,398,773	.34	3,398,818
33	3,398,458	58	3,398,547	343	3,398,618	106– 38.3	3,399,067	309	3,398,774	4	3,398,819
43	3,398,459	124	3,398,548	363	3,398,619	72	3,399,068	148– 11.5	3,399,084	35	3,398,820
45	3,398,460	129	3,398,549	430	3,398,620	164	3,399,069	16.6	3,399,085	48.7	3,398,821
	3,398,461	179	3,398,550	454	3,398,621	107– 9	3,398,701	32	3,399,086	66	3,398,822
	3,398,462	196	3,398,551	84–267	3,398,622	15	3,398,702	149– 19	3,399,087	195– 1.3	3,399,113
92	3,398,463	320	3,398,552		3,398,623	108– 51	3,398,703		3,399,088	47	3,399,114
122	3,398,464	353	3,398,553	330	3,398,624	79	3,398,704	39	3,399,089	103.5	3,399,115
133	3,398,465	65– 25	3,399,042	85– 46	3,398,625	110– 8	3,398,705	151– 15	3,398,775	196– 98	3,399,116
160	3,398,466	30	3,399,043	50	3,398,626	111– 7	3,398,706	152–353	3,398,776	117	3,399,117
233	3,398,467	155	3,399,044	71	3,398,627	85	3,398,707	156– 19	3,399,090	198– 22	3,398,823
36– 2.5	3,398,468		3,399,045	73	3,398,628	112– 79	3,398,708	71	3,399,091	33	3,398,824
11.5	3,398,469	340	3,399,046	86– 19	3,398,629	162	3,398,709	74	3,399,092	200– 5	3,399,282
37– 43	3,398,470	346	3,399,047	88– 14	3,398,630	231	3,398,710	76	3,399,093	39	3,399,283
86	3,398,471	66– 89	3,398,554		3,398,631	113– 1	3,398,711	79	3,399,094	61.05	3,399,284
118	3,398,472	130	3,398,555		3,398,632	114– 67	3,398,712		3,399,095	67	3,399,285
38– 10	3,398,473	68– 18	3,398,556		3,398,633		3,398,713	200	3,399,098	144	3,399,286
101	3,398,474	69– 33	3,398,557	24	3,398,634	218	3,398,714	202	3,399,096	159	3,399,287
40– 11	3,398,475	70–277	3,398,558		3,398,635	235	3,398,715	479	3,399,099	202–173	3,399,118
42– 25	3,398,476	71–106	3,399,048		3,398,636		3,398,716	523	3,399,100	203– 38	3,399,119

203– 84	3,399,120
204– 2	3,399,121
24	3,399,122
49	3,399,123
72	3,399,124
143	3,399,125
180	3,399,127
181	3,399,126
	3,399,128
192	3,399,129
206	3,399,130
220	3,399,131
206– 15.1	3,398,825
46	3,398,826
65	3,398,827
72	3,398,828
208–111	3,399,132
209– 3	3,398,829
210– 42	3,399,133
	3,399,134
	3,399,135
50	3,399,136
153	3,398,830
198	3,398,831
284	3,398,832
321	3,398,833
	3,398,834
443	3,398,835
455	3,398,836
496	3,398,837
531	3,398,838
211– 13	3,398,839
126	3,398,840
214– 8.5	3,398,841
16	3,398,842
.1	3,398,843
.6	3,398,844
152	3,398,845
454	3,398,846
215– 9	3,398,847
	3,398,848
217– 15	3,398,849
219– 69	3,399,288
86	3,399,289
150	3,399,290
243	3,399,291
469	3,399,292
501	3,399,293
522	3,399,294
523	3,399,295
220– 6	3,398,850
26	3,398,851
39	3,398,852
55	3,398,853
80	3,398,854
93	3,398,855
115	3,398,856
221–190	3,398,857
222– 30	3,398,858
41	3,398,859
46	3,398,860
52	3,398,861
57	3,398,862
70	3,398,863
180	3,398,864
317	3,398,865
333	3,398,866
223– 87	3,398,867
225–103	3,398,868
226– 23	3,398,869
97	3,398,870
173	3,398,871
227–110	3,398,872
228– 37	3,398,873
57	3,398,874
229– 2.5	3,398,875
45	3,398,876
	3,398,877

230– 56	3,398,878
69	3,398,879
117	3,398,880
122	3,398,881
125	3,398,882
134	3,398,883
152	3,398,884
191	3,398,885
206	3,398,886
232	3,398,887
233– 47	3,398,888
235– 61.11	3,399,296
92	3,399,297
	3,399,298
154	3,399,299
193	3,399,300
236– 1	3,398,889
15	3,398,890
18	3,398,891
239– 15	3,398,892
77	3,398,893
97	3,398,894
132.3	3,398,895
265.41	3,398,896
338	3,398,897
533	3,398,936
549	3,398,898
597	3,398,899
241– 67	3,398,900
154	3,398,901
170	3,398,902
185	3,398,903
242– 18	3,398,904
35.5	3,398,905
.6	3,398,906
46.4	3,398,907
55.11	3,398,909
.12	3,398,910
.2	3,398,908
58.4	3,398,911
71.2	3,398,912
.8	3,398,913
75.43	3,398,914
118.7	3,398,915
244– 3.11	3,398,916
.13	3,398,918
137	3,398,917
248–103	3,398,919
226	3,398,920
345.1	3,398,921
361	3,398,922
249–134	3,398,923
250– 71	3,399,301
.5	3,399,302
83.3	3,399,303
207	3,399,304
209	3,399,305
219	3,399,306
224	3,399,307
235	3,399,308
251– 31	3,398,924
148	3,398,925
172	3,398,926
228	3,398,927
251	3,398,928
252– 33.6	3,399,138
37	3,399,139
47.5	3,399,141
62.1	3,399,140
.63	3,399,142
79.2	3,399,143
99	3,399,144
188.3	3,399,137
309	3,399,145
355	3,399,146
372	3,399,147
463	3,399,148
253– 39	3,398,929

253– 39	3,398,930
	3,398,931
117	3,398,932
254– 98	3,398,933
258– 1.4	3,398,934
259– 18	3,398,935
260– 2	3,399,149
	3,399,150
.5	3,399,151
17	3,399,152
21	3,399,153
22	3,399,154
23	3,399,155
29.1	3,399,156
.6	3,399,157
	3,399,158
	3,399,159
31.2	3,399,160
32.4	3,399,161
33.2	3,399,162
.6	3,399,163
	3,399,164
41	3,399,165
.5	3,399,166
45.8	3,399,167
.9	3,399,168
.95	3,399,169
47	3,399,170
	3,399,171
	3,399,172
	3,399,173
	3,399,174
80	3,399,175
83.3	3,399,176
85.5	3,399,177
89.5	3,399,178
92.1	3,399,179
	3,399,180
.3	3,399,181
93.7	3,399,182
	3,399,183
	3,399,184
94.9	3,399,185
148	3,399,186
	3,399,187
152	3,399,188
209	3,399,189
233.3	3,399,190
.5	3,399,200
240	3,399,192
.6	3,399,191
247.5	3,399,193
249	3,399,194
256	3,399,195
.4	3,399,196
	3,399,197
.5	3,399,198
268	3,399,199
	3,399,201
287	3,399,202
	3,399,203
294.3	3,399,204
.8	3,399,205
297	3,399,206
306.7	3,399,207
	3,399,208
307	3,399,209
309	3,399,210
	3,399,211
.2	3,399,212
326	3,399,213
327	3,399,214
340.6	3,399,215
.9	3,399,216
348.6	3,399,217
385	3,399,218
410.9	3,399,219
446	3,399,220

260–448	3,399,221
.2	3,399,222
.8	3,399,223
464	3,399,224
465	3,399,225
471	3,399,226
475	3,399,227
482	3,399,228
485	3,399,229
537	3,399,230
553	3,399,231
562	3,399,232
565	3,399,233
566	3,399,234
583	3,399,235
585	3,399,236
591	3,399,237
609	3,399,238
	3,399,239
614	3,399,240
633	3,399,241
668	3,399,242
669	3,399,243
675.5	3,399,244
679	3,399,245
680	3,399,246
824	3,399,247
837	3,399,248
878	3,399,249
897	3,399,250
	3,399,251
261– 23	3,398,937
46	3,398,938
263– 6	3,398,939
19	3,398,940
28	3,398,941
32	3,398,942
264– 27	3,399,252
30	3,399,253
84	3,399,254
117	3,399,255
120	3,399,256
134	3,399,257
161	3,399,258
168	3,399,259
182	3,399,260
184	3,399,261
209	3,399,262
266– 23	3,398,943
34	3,398,944
42	3,398,945
267– 52	3,398,946
271– 71	3,398,947
272– 1	3,398,948
8	3,398,949
273– 1	3,398,950
47	3,398,952
54	3,398,951
55	3,398,953
	3,398,954
98	3,398,955
101	3,398,956
	3,398,957
102.2	3,398,958
	3,398,959
106.5	3,398,960
194	3,398,961
274– 9	3,398,962
23	3,398,963
277– 21	3,398,964
279– 30	3,398,965
116	3,398,966
280– 6	3,398,967
11.13	3,398,968
.35	3,398,969
16	3,398,970
47.11	3,398,971

280–150.5	3,398,972
236	3,398,973
289	3,398,974
468	3,398,975
495	3,398,976
285– 45	3,398,977
64	3,398,979
98	3,398,980
187	3,398,978
287–189.35	3,398,981
	3,398,982
.36	3,398,983
296– 1	3,398,984
57	3,398,985
297–355	3,398,986
379	3,398,987
426	3,398,988
299– 39	3,398,989
302– 29	3,398,990
303– 7	3,398,991
20	3,398,992
	3,398,993
21	3,398,994
	3,398,995
307– 88	3,399,309
108	3,399,310
225	3,399,311
229	3,399,312
311	3,399,313
308– 2	3,398,996
	3,398,997
3	3,398,998
6	3,398,999
9	3,399,000
	3,399,001
10	3,399,002
18	3,399,003
35	3,399,004
44	3,399,005
137	3,399,006
172	3,399,007
217	3,399,008
310– 8.2	3,399,314
11	3,399,315
25	3,399,316
93	3,399,317
156	3,399,318
312–244	3,399,009
313– 85	3,399,319
92	3,399,320
218	3,399,321
357	3,399,322
315– 3.5	3,399,326
18	3,399,323
20	3,399,324
27	3,399,325
189	3,399,327
246	3,399,328
317– 2	3,399,329
232	3,399,330
234	3,399,331
	3,399,332
318–227	3,399,333
329	3,399,334
434	3,399,335
321– 5	3,399,336
	3,399,337
323– 9	3,399,338
22	3,399,339
324– 33	3,399,341
54	3,399,342
57	3,399,343
61	3,399,344
84	3,399,345
87	3,399,346
96	3,399,347
	3,399,348

324–115	3,399,349
325– 38	3,399,350
328–119	3,399,351
329–122	3,399,352
126	3,399,353
330– 13	3,399,354
15	3,399,355
21	3,399,356
22	3,399,357
149	3,399,358
331– 94.5	3,399,359
108	3,399,360
333– 31	3,399,361
33	3,399,340
334– 51	3,399,362
335–183	Re.26,445
270	3,399,363
336–107	3,399,364
213	3,399,365
337–365	3,399,366
338–175	3,399,367
177	3,399,368
180	3,399,369
339– 8	3,399,370
17	3,399,371
	3,399,372
62	3,399,373
91	3,399,374
104	3,399,375
147	3,399,376
176	3,399,377
340– 34	3,399,378
40	3,399,379
147	3,399,380
	3,399,395
171	3,399,381
172.5	3,399,382
	3,399,383
	3,399,384
	3,399,385
	3,399,386
	3,399,387
173.1	3,399,388
	3,399,396
174	3,399,389
	3,399,390
.1	3,399,391
	3,399,392
	3,399,393
	3,399,394
216	3,399,397
237	3,399,398
244	3,399,399
323	3,399,400
324	3,399,401
	3,399,402
347	3,399,403
343– 5	3,399,404
6.5	3,399,405
350– 47	3,399,010
60	3,399,011
96	3,399,012
161	3,399,013
184	3,399,014
187	3,399,015
214	3,399,016
224	3,399,017
351–154	3,399,018
401–134	3,399,019
135	3,399,020
199	3,399,021
424– 88	3,399,263
257	3,399,264
300	3,399,265
431–116	3,399,022
255	3,399,023
286	3,399,024

Classification of Designs

D 1– 2	212,070
D 3– 19	212,071
D 9– 2	212,072
170	212,073
177	212,074
178	212,075
191	212,076
216	212,077
275	212,078
D10– 8	212,079
D13– 1	212,080
	212,081
D14– 3	212,082
6	212,083
D15– 1	212,084
8	212,085
	212,086
D16– 2	212,087
	212,088
D23– 2	212,089
3	212,090
7	212,091
80	212,092
D26– 13	212,093
	212,094
14	212,095
15	212,096
D30– 25	212,097
D33– 3	212,098
	212,099
14	212,100
31	212,101
D34– 5	212,102
	212,103
	212,104
15	212,105
D35– 3	212,106
	212,107
D36– 8	212,108
D44– 6	212,109
D44– 9	212,110
10	212,111
15	212,112
	212,113
	212,114
29	212,115
	212,116
D45– 10	212,117
19	212,118
D48– 24	212,119
	212,120
D49– 1	212,121
30	212,122
D50– 5	212,123
D52– 7	212,124
D54– 1	212,125
12	212,126
D55– 1	212,127
D56– 2	212,128
4	212,129
D61– 1	212,130
D64– 18	212,131
D65– 1	212,132
D69– 1	212,133
D72– 1	212,134
D80– 8	212,135
D80– 9	212,136
D81– 10	212,137
D83– 1	212,144
	212,145
D86– 14	212,138
D87– 2	212,139
D90– 3	212,140
D92– 21	212,141
26	212,142
	212,143
	212,146
D95– 5	212,147
D97– 1	212,148

GEOGRAPHICAL INDEX OF RESIDENCE OF INVENTORS

(U.S. States, Territories and Armed Forces, the Commonwealth of Puerto Rico, and the Canal Zone)

(NOTE.–CODES ARE CHANGED AS OF JANUARY 1, 1967)

Alabama	1	Kentucky	21	Oregon	41
Alaska	2	Louisiana	22	Pennsylvania	42
American Samoa	3	Maine	23	Puerto Rico	43
Arizona	4	Maryland	24	Rhode Island	44
Arkansas	5	Massachusetts	25	South Carolina	45
California	6	Michigan	26	South Dakota	46
Canal Zone	7	Minnesota	27	Tennessee	47
Colorado	8	Mississippi	28	Texas	48
Connecticut	9	Missouri	29	Utah	49
Delaware	10	Montana	30	Vermont	50
District of Columbia	11	Nebraska	31	Virginia	51
Florida	12	Nevada	32	Virgin Islands	52
Georgia	13	New Hampshire	33	Washington	53
Guam	14	New Jersey	34	West Virginia	54
Hawaii	15	New Mexico	35	Wisconsin	55
Idaho	16	New York	36	Wyoming	56
Illinois	17	North Carolina	37	U.S. Air Force	57
Indiana	18	North Dakota	38	U.S. Army	58
Iowa	19	Ohio	39	U.S. Navy	59
Kansas	20	Oklahoma	40		

(First number in listing denotes location according to above key. Refer to patent number in body of the Official Gazette to obtain details as to inventor name, location, etc.)

Patents

1	3,398,417
	3,398,951
	3,399,088
	3,399,375
2	3,399,334
4	3,398,510
	3,398,706
	3,399,058
	3,399,294
5	3,398,700
	3,398,889
6	3,398,434
	3,398,494
	3,398,501
	3,398,505
	3,398,513
	3,398,527
	3,398,536
	3,398,561
	3,398,565
	3,398,569
	3,398,582
	3,398,586
	3,398,588
	3,398,612
	3,398,628
	3,398,638
	3,398,663
	3,398,670
	3,398,671
	3,398,719
	3,398,738
	3,398,758
	3,398,761
	3,398,790
	3,398,799
	3,398,800
	3,398,804
	3,398,812
	3,398,813
	3,398,833
	3,398,834
	3,398,840
	'3,398,846
	3,398,867
	3,398,872
	3,398,879
	3,398,893
	3,398,901
	3,398,903
6	3,398,908
	3,398,912
	3,398,914
	3,398,947
	3,398,948
	3,398,998
	3,399,001
	3,399,002
	3,399,020
	3,399,032
	3,399,039
	3,399,044
	3,399,072
	3,399,087
	3,399,132
	3,399,179
	3,399,230
	3,399,232
	3,399,235
	3,399,240
	3,399,241
	3,399,266
	3,399,281
	3,399,302
	3,399,308
	3,399,314
	3,399,329
	3,399,340
	3,399,345
	3,399,352
	3,399,359
	3,399,367
	3,399,368
	3,399,369
	3,399,383
	3,399,394
	3,399,396
	3,399,397
	3,399,401
8	3,398,424
	3,398,793
	3,399,119
	3,399,233
9	3,398,431
	3,398,432
	3,398,442
	3,398,491
	3,398,534
	3,398,583
	3,398,584
9	3,398,605
	3,398,678
	3,398,713
	3,398,826
	3,398,848
	3,398,881
	3,398,895
	3,398,942
	3,399,013
	3,399,031
	3,399,061
	3,399,084
	3,399,118
	3,399,137
	3,399,143
	3,399,146
	3,399,148
	3,399,151
	3,399,162
	3,399,190
	3,399,217
	3,399,238
	3,399,262
	3,399,263
	3,399,316
	3,399,328
	3,399,341
10	3,398,825
	3,398,829
	3,399,108
	3,399,156
12	3,398,406
	3,398,409
	3,398,426
	3,398,514
	3,398,608
	3,398,894
	3,398,979
	3,399,068
	3,399,166
	3,399,293
13	3,398,457
	3,398,500
	3,398,570
	3,398,920
	3,398,955
	3,398,980
	3,399,097
	3,399,349
	3,399,381
15	3,398,407
16	3,398,572
	3,398,622
	3,398,623
	3,399,062
17	3,398,470
	3,398,526
	3,398,531
	3,398,540
	3,398,587
	3,398,591
	3,398,648
	3,398,656
	3,398,665
	3,398,674
	3,398,675
	3,398,703
	3,398,729
	3,398,730
	3,398,739
	3,398,781
	3,398,783
	3,398,811
	3,398,819
	3,398,824
	3,398,839
	3,398,858
	3,398,863
	3,398,864
	3,398,865
	3,398,876
	3,398,877
	3,398,878
	3,398,883
	3,398,956
	3,398,962
	3,398,964
	3,399,005
	3,399,006
	3,399,009
	3,399,063
	3,399,064
	3,399,065
	3,399,069
	3,399,140
	3,399,145
	3,399,153
	3,399,154
	3,399,189
	3,399,219
17	3,399,227
	3,399,269
	3,399,274
	3,399,276
	3,399,287
	3,399,289
	3,399,307
	3,399,319
	3,399,330
	3,399,351
	3,399,362
	3,399,378
	3,399,399
18	Re.26,446
	Re.26,447
	3,398,530
	3,398,538
	3,398,597
	3,398,606
	3,398,632
	3,398,641
	3,398,649
	3,398,692
	3,398,705
	3,398,837
	3,398,843
	3,398,892
	3,398,904
	3,398,905
	3,398,931
	3,398,985
	3,399,008
	3,399,052
	3,399,075
	3,399,092
	3,399,175
	3,399,200
	3,399,253
	3,399,277
19	3,398,471
	3,398,733
	3,398,770
	3,398,777
	3,398,961
	3,399,311
20	3,398,732
21	3,398,553
	3,398,756
	3,399,176
	3,399,296
22	3,398,543
	3,398,657
	3,398,810
	3,398,856
	3,398,888
	3,398,938
	3,399,091
23	3,398,838
	3,398,875
24	3,398,445
	3,398,571
	3,398,673
	3,398,746
	3,398,759
	3,399,250
	3,399,278
	3,399,299
	3,399,358
	3,399,360
	3,399,379
25	3,398,414
	3,398,428
	3,398,466
	3,398,467
	3,398,478
	3,398,525
	3,398,575
	3,398,669
	3,398,717
	3,398,949
	3,399,012
	3,399,018
	3,399,029
	3,399,051
	3,399,060
	3,399,076
	3,399,086
	3,399,104
	3,399,121
	3,399,147
	3,399,155
	3,399,159
	3,399,172
	3,399,270
	3,399,285
	3,399,312
	3,399,313
	3,399,332
	3,399,344
	3,399,363

25 : 3,399,382
26 : 3,398,408
3,398,410
3,398,419
3,398,447
3,398,449
3,398,460
3,398,461
3,398,462
3,398,465
3,398,487
3,398,488
3,398,499
3,398,524
3,398,532
3,398,533
3,398,542
3,398,589
3,398,590
3,398,594
3,398,599
3,398,600
3,398,604
3,398,607
3,398,615
3,398,651
3,398,659
3,398,697
3,398,788
3,398,940
3,398,946
3,398,952
3,398,957
3,398,986
3,398,987
3,398,992
3,398,999
3,399,079
3,399,080
3,399,105
3,399,109
3,399,123
3,399,126
3,399,128
3,399,134
3,399,152
3,399,174
3,399,205
3,399,210
3,399,213
3,399,222
3,399,223
3,399,239
3,399,284
3,399,290
3,399,295
3,399,323
3,399,373
27 : 3,398,422
3,398,629
3,398,662
3,398,685
3,398,774
3,399,180
3,399,224
3,399,234
3,399,377
29 : 3,398,411
3,398,627
3,398,725
3,398,757
3,398,859
3,398,890
3,399,138
29 : 3,399,157
3,399,231
3,399,255
31 : 3,398,420
3,398,492
3,398,645
3,398,689
3,398,874
33 : 3,398,873
3,399,040
34 : Re.26,443
3,398,413
3,398,438
3,398,439
3,398,495
3,398,609
3,398,636
3,398,676
3,398,677
3,398,710
3,398,711
3,398,747
3,398,780
3,398,823
3,398,847
3,398,853
3,398,900
3,398,910
3,398,933
3,398,936
3,398,944
3,398,950
3,399,022
3,399,028
3,399,041
3,399,066
3,399,070
3,399,071
3,399,077
3,399,090
3,399,106
3,399,107
3,399,124
3,399,136
3,399,142
3,399,149
3,399,169
3,399,178
3,399,188
3,399,198
3,399,199
3,399,202
3,399,203
3,399,211
3,399,216
3,399,220
3,399,242
3,399,291
3,399,292
3,399,335
3,399,343
3,399,355
3,399,385
3,399,390
3,399,404
3,399,405
36 : Re.26,444
3,398,421
3,398,427
3,398,451
3,398,454
3,398,468
3,398,473
3,398,474
36 : 3,398,551
3,398,558
3,398,580
3,398,596
3,398,610
3,398,619
3,398,624
3,398,630
3,398,631
3,398,637
3,398,646
3,398,647
3,398,650
3,398,680
3,398,686
3,398,702
3,398,716
3,398,743
3,398,748
3,398,750
3,398,751
3,398,752
3,398,775
3,398,789
3,398,828
3,398,842
3,398,852
3,398,854
3,398,857
3,398,870
3,398,887
3,398,913
3,398,935
3,398,937
3,398,954
3,398,988
3,399,014
3,399,015
3,399,016
3,399,017
3,399,043
3,399,094
3,399,096
3,399,113
3,399,116
3,399,127
3,399,248
3,399,256
3,399,258
3,399,265
3,399,268
3,399,275
3,399,305
3,399,315
3,399,324
3,399,331
3,399,347
3,399,350
3,399,364
3,399,372
3,399,376
3,399,384
3,399,387
3,399,393
37 : 3,399,048
3,399,111
3,399,228
3,399,389
39 : 3,398,430
3,398,444
3,398,452
3,398,453
3,398,469
39 : 3,398,479
3,398,482
3,398,485
3,398,489
3,398,490
3,398,517
3,398,535
3,398,552
3,398,563
3,398,566
3,398,574
3,398,595
3,398,598
3,398,601
3,398,618
3,398,634
3,398,652
3,398,653
3,398,660
3,398,661
3,398,682
3,398,722
3,398,741
3,398,742
3,398,755
3,398,776
3,398,779
3,398,802
3,398,808
3,398,814
3,398,822
3,398,866
3,398,884
3,398,896
3,398,907
3,398,945
3,398,960
3,398,965
3,398,966
3,398,969
3,398,971
3,398,974
3,398,991
3,399,042
3,399,082
3,399,083
3,399,095
3,399,099
3,399,103
3,399,144
3,399,197
3,399,246
3,399,252
3,399,264
3,399,297
3,399,333
3,399,339
3,399,346
3,399,348
3,399,366
3,399,400
3,399,402
40 : 3,398,508
3,398,512
3,398,544
3,398,547
3,398,723
3,398,805
3,398,845
3,398,925
3,398,926
3,399,183
3,399,236
40 : 3,399,300
41 : 3,398,423
3,398,475
3,398,502
3,398,684
3,398,736
3,398,771
3,399,033
3,399,135
3,399,286
42 : Re.26,445
3,398,560
3,398,567
3,398,568
3,398,577
3,398,585
3,398,664
3,398,695
3,398,787
3,398,797
3,398,815
3,398,868
3,398,899
3,398,919
3,398,922
3,398,934
3,398,939
3,398,958
3,398,959
3,398,978
3,398,982
3,398,993
3,398,994
3,399,024
3,399,025
3,399,036
3,399,037
3,399,046
3,399,049
3,399,067
3,399,085
3,399,089
3,399,093
3,399,101
3,399,117
3,399,141
3,399,160
3,399,165
3,399,182
3,399,185
3,399,212
3,399,226
3,399,237
3,399,243
3,399,249
3,399,254
3,399,267
3,399,298
3,399,303
3,399,309
3,399,317
3,399,357
3,399,361
3,399,370
3,399,371
3,399,374
3,399,380
3,399,391
3,399,398
43 : 3,398,497
44 : 3,398,415
3,398,520
3,398,521
44 : 3,398,522
3,398,581
3,398,807
3,398,906
45 : 3,398,459
3,399,251
47 : 3,398,549
3,398,708
3,398,718
3,398,720
3,398,735
3,399,073
48 : 3,398,456
3,398,463
3,398,541
3,398,550
3,398,576
3,398,626
3,398,654
3,398,655
3,398,715
3,398,760
3,398,762
3,398,778
3,398,785
3,398,791
3,398,792
3,398,794
3,398,795
3,398,796
3,398,798
3,398,803
3,398,851
3,398,862
3,398,924
3,398,928
3,399,115
3,399,120
3,399,133
3,399,181
3,399,215
3,399,245
49 : 3,398,744
3,398,831
3,398,975
3,398,989
50 : 3,398,728
3,399,129
51 : 3,398,429
3,398,477
3,398,539
3,398,707
3,399,074
53 : 3,398,578
3,398,806
3,398,809
3,398,849
3,398,885
3,398,953
3,399,386
54 : 3,398,448
3,399,353
55 : 3,398,548
3,398,693
3,398,749
3,398,786
3,398,827
3,398,835
3,398,886
3,398,976
3,398,984
3,399,337
56 : 3,398,690

Design Patents

6 : 212,081
212,085
212,087
212,090
212,091
212,094
212,095
212,100
212,103
212,104
212,105
212,106
212,111
6 : 212,128
212,144
8 : 212,140
9 : 212,096
12 : 212,119
13 : 212,132
17 : 212,079
212,089
212,099
212,115
212,117
212,136
19 : 212,127
22 : 212,073
25 : 212,088
212,130
26 : 212,101
212,139
29 : 212,121
34 : 212,070
212,102
212,131
212,147
36 : 212,072
212,075
36 : 212,076
212,086
212,097
212,107
212,110
212,112
212,113
212,114
212,118
212,124
212,125
212,126
36 : 212,129
212,133
212,135
39 : 212,071
212,082
212,108
212,109
212,116
212,141
42 : 212,134
212,142
212,143
42 : 212,146
47 : 212,074
48 : 212,080
212,148
53 : 212,084
212,092
212,138
55 : 212,093
212,098
212,120
212,123
212,145

U.S. DEPARTMENT OF COMMERCE

OFFICIAL GAZETTE of the UNITED STATES PATENT OFFICE

August 27, 1968 Volume 853 Number 4

TRADEMARKS

NOTICES

Trademark Suits

Notices under 15 U.S.C. 1116; Trademark Act of July 5, 1946

Reg. No. 193,730 (FOOD SERVICE), Electrical Information Publications, Inc., Monthly publications; **Reg. No. 569,484** (FOOD SERVICE NEWS), same, Periodical publications, **filed** Jan. 23, 1968, D.C., N.D. Ill. (Chicago), Doc. 68c136, *Electrical Information Publications, Inc. v. Conover-Mast Publications, Inc.*

Reg. No. 361,460 (LADY IN WAITING), Fitwell Dress Co., Inc., Ladies' maternity dresses; **Reg. No. 782,476**, same, (Group A) women's dresses, shirts, slacks, shorts, blouses, suits, bathing suits, jumpers, jackets, coats, jerkins and maternity uniforms; and (Group B) women's bras, girdles, garter-belts, panties, half-slips, full slips, sleep wear, lounge wear and support stockings, **filed** Oct. 10, 1966, D.C.N.J. (Newark), Doc. 1010–66, *Fitwell Dress Co., Inc. v. L. F. Lashner, trading as The Waiting Lady Maternity Shoppe.* Order of dismissal, May 24, 1968.

Reg. No. 378,913 (BATMAN), National Comics Publication, Inc., Cartoons published in a series; **Reg. No. 382,770** (BAT MAN AND DESIGN), same, Magazine; **Reg. No. 804,709**, same, National Periodical Publications, Inc., Comic magazines, **filed** Aug. 17, 1966, D.C., S.D.N.Y., Doc. 66–C–2600, *National Periodical Publications, Inc. v. Bland Charnas Co., Inc.* Defendant permanently restrained and enjoined, June 3, 1968.

Reg. No. 382,770. (See Reg. No. 378,913.)

Reg. No. 400,505 (MADEMOISELLE), The Condé Nast Publications, Inc., Magazine, **filed** May 24, 1968, D.C. Conn. (New Haven), Doc. 12570, *The Condé Nast Publications, Inc. v. Irene E. Anderson, doing business as Mademoiselle Modeling School & Agency.*

Reg. No. 517,753 (ALUMISEAL), C. T. Hogan & Company, Inc., Fabricated insulating barriers and materials for such barriers, including sheet aluminum insulation and vapor barriers, comprising self-sustaining, non-porous, heat-reflective sheets of aluminum used for insulating barriers for refrigerated structures, insulating barriers for structures exposed to high temperatures, and insulating barriers for equipment and pipes operated at refrigerating or high temperatures, **filed** June 3, 1968, D.C.N.J. (Newark), Doc. C–547–68, *Alumiseal Corporation v. Mayflower Vapor Seal Corp.*

Reg. No. 569,484. (See Reg. No. 193,730.)

Reg. No. 582,078 (DOLL FLY), Thompson's Fishing Tackle Co., Artificial lures, **filed** June 3, 1968, D.C., W.D. Mo. (Springfield), Doc. 2418, *Thompson Fishing Tackle Co., Inc. v. Blakemore Bug Co.*

Reg. No. 587,784 (NEGASTAT), Phillips Products, Static dust preventive which is used for coating surfaces and the like to eliminate static electricity accumulations and to repel dust therefrom, **filed** Oct. 26, 1967, D.C., N.D. Ill. (Chicago), Doc. 67c1861, *I. B. Phillips v. Playtime Products, Inc.* Order entered dismissing complaint by agreement with prejudice, Jan. 3, 1967.

CONDITION OF TRADEMARK APPLICATIONS AS OF JUNE 30, 1968

Total number of applications awaiting action [excluding renewals and Sec. 12(c)]	15, 157
Date of oldest new application	Feb. 9, 1967
Date of oldest amended application (filing date)	Oct. 23, 1965

C. M. WENDT, Director, Trademark Examining Operation TRADEMARK EXAMINING DIVISIONS, EXAMINERS AND TRADEMARK CLASSES UNDER EXAMINATION	Oldest Application	
	New	Amended
(I) L. J. BETTENDORF, Classes 2, 3, 4, 5, 7, 9, 10, 11, 27, 28, 30, 32, 33, 37, 38, 39, 40, 41, 42, 43, 50; Certification Marks, Classes A and B	6–27–67	11–8–65
(II) F. H. WETHERBEE, Classes 1, 6, 15, 18, 45, 46, 47, 48, 49, 51, 52; Collective Membership Mark, Class 200	9–28–67	12–1–65
(III) P. S. BALL, Classes 19, 21, 23, 26, 31, 34, 35, 36	10–2–67	10–23–65
(IV) M. E. ABRAMSON, Classes 8, 12, 13, 14, 16, 17, 20, 22, 24, 25, 29, 44; Service Marks, Classes 100, 101, 102, 103, 104, 105, 106, and 107	2–9–67	3–25–66
Renewals (All Classes)	6–4–68	
Sec. 12(c) Publications (All Classes)	5–31–68	

Applications filed during the month of June 1968—2,280

Registrations Issued .... 395—No. 855,345 to No. 855,739
Renewals Issued 100

The TRADEMARK SECTION of the OFFICIAL GAZETTE, issued weekly, is mailed under the direction of the Superintendent of Documents, Government Printing Office, Washington, D.C. 20402 to whom all subscriptions should be made payable and all communications addressed; subscription price $12.00 per annum, foreign mailing $4.00 additional; single copies, 25 cents each.

PRINTED COPIES OF TRADEMARK REGISTRATIONS are furnished by the Patent Office for 20 cents each. Address orders to the Commissioner of Patents, Washington, D.C. 20231.

Reg. No. 612,697 (AGILON), Deering Milliken Research Corporation, Stretch and/or bulked yarns made from elasticized thermoplastic filaments and their combinations with other textile yarns, **filed** June 6, 1968, D.C., S.D.N.Y., Doc. 68-C-2310, *Deering Milliken Research Corp.* v. *Patrick Industries, Inc. et ano.*

Reg. No. 685,666 (CHEMSEARCH), National Disinfectant Company, Cleaning compositions for building floors and walls; **Reg. No. 725,504** (NATIONAL CHEMSEARCH AND DESIGN), National Chemsearch Corporation, Liquid dust mop treatment that fireproofs mops; disinfectants, wetting agents, coolants, anticorroding agents, fumigants, and industrial and institutional deodorants; **Reg. No. 725,717**, same, Industrial and institutional detergents, solvent degreaser, glass cleaner, soap, antiseptic lotion cleaner, sewer and drain pipe cleaners, sewerage system cleaners, and paint remover, **filed** May 29, 1968, D.C., N.D. Ohio (Toledo), Doc. C-68-165, *National Chemsearch Corp.* v. *Uni-Search Corp.*

Reg. No. 725,504. (See Reg. No. 685,666.)

Reg. No. 725,717. (See Reg. No. 685,666.)

Reg. No. 782,476. (See Reg. No. 361,460.)

Reg. No. 804,709. (See Reg. No. 378,913.)

Reg. No. 815,607 (PUNCH), Colgate-Palmolive Company, Laundry detergent, **filed** June 6, 1968, D.C., N.D. Ill. (Chicago), Doc. 68c1042, *Colgate-Palmolive Company* v. *Sanford Chemical Co., Inc.*

MARKS PUBLISHED FOR OPPOSITION

SECTION 1

The following marks are published in compliance with section 12(a) of the Trademark Act of 1946. Application for the registration of these marks in more than one class has been filed as provided in section 30 of said act as amended by Public Law 772, 87th Congress, approved Oct. 9, 1962, 76 Stat. 769. Opposition under section 13 may be filed within thirty days of this publication. See Rules 2.101 to 2.105.

A separate fee of twenty-five dollars for each class opposed must accompany the opposition.

[NOTE: For publication of marks presented in applications for registration in one class, see section 2.]

SN 249,539. John W. Jenkins, d.b.a. Planaflex Company, New York, N.Y. Filed July 5, 1966.

PLANAFLEX

Class 38—Prints and Publications

For Manuals for Use by Management Personnel To Facilitate Planning and Decision Making (Int. Cl. 16).

Class 101—Advertising and Business

For Management Consulting Services (Int. Cl. 35).

First use Sept. 3, 1965.

SN 251,369. Baxter Associates, Inc., Glendale, Calif., assignee of Kenneth William Baxter, Glendale, Calif. Filed Aug. 1, 1966.

STOR-WEL

Class 2—Receptacles

For Containers for Storing, Filing, Displaying, Carrying, Shipping, and Mailing Rolled Materials Such as Maps, Drawings, Plans, Paper Products, and the Like (Int. Cl. 20).

Class 32—Furniture and Upholstery

For Movable and Stationary Storage, Display and Filing Racks and Modular Rack Units (Int. Cl. 20).

First use on or before Dec. 8, 1965.

SN 258,629. Weather-Seal, Inc., Barberton, Ohio. Filed Nov. 14, 1966.

PRESTIGE

Class 12—Construction Materials

For Wood and Metal Building Materials and Products—Namely, Doors, Screens, Windows, and Awnings (Int. Cls. 6 and 19).

Class 32—Furniture and Upholstery

For Bathroom and Kitchen Cabinets (Int. Cl. 20).

First use Aug. 15, 1964.

SN 261,237. Sunbrand Corporation, Chamblee, Ga. Filed Dec. 21, 1966.

SUNCO

Owner of Reg. No. 749,371.

Class 21—Electrical Apparatus, Machines, and Supplies

For Electric Sewing Machine Motors and Buttonhole Solenoid Starters (Int. Cl. 7).

First use at least as early as January 1962.

Class 23—Cutlery, Machinery, and Tools, and Parts Thereof

For Textile Machinery and Parts and Attachments Therefor—Namely, Cutting Machine Blades, Cloth Cutting Tables, Collar Trimmers, Collar Point Turners, Cutting Table Hole Eliminators, Turning Machines, Thread Storage Clamps, Blindstitch Sewing Machines, Sewing Machine Hoods, Thread Cutting Devices, Braid and Elastic Cutting Devices, Sewing Machine Folders and Attachments, Edge Cutter Attachments, Air Vacuum Units for Garment Presses, Plastic Bag Sealers, Seambusting Pressing Machines, Dual Automatic Marking Machines and Stackers (Int. Cl. 7).

First use at least as early as Jan. 2, 1962.

Class 24—Laundry Appliances and Machines

For Pads and Cloths for Garment Presses (Int. Cl. 24).

First use at least as early as April 1964.

Class 32—Furniture and Upholstery

For Cutting Room Tables and Adjustable Work Racks (Int. Cl. 20).

First use at least as early as September 1963.

Class 35—Belting, Hose, Machinery Packing, and Nonmetallic Tires

For Sewing Machine V-Belts and Press Iron Steam Hoses (Int. Cls. 7 and 17).

First use at least as early as May 1964.

Class 37—Paper and Stationery

For Textile Marking Transfer Papers and Separating Tissue Paper (Int. Cl. 16).

First use at least as early as November 1964.

SN 264,446. Ross-Matthai Corporation, Baltimore, Md. Filed Feb. 10, 1967.

ROMATCH

Owner of Reg. No. 706,405.

Class 42—Knitted, Netted, and Textile Fabrics, and Substitutes Therefor

For Table Placemats, Napkins, and Tablecloths of Textile Fabrics (Int. Cl. 24).

Class 50—Merchandise Not Otherwise Classified

For Table Placemats, Napkins, and Tablecloths of Plastic Material (Int. Cl. 27).

First use Jan. 9, 1967.

SN 268,108. Sprague Electric Company, North Adams, Mass. Filed Mar. 31, 1967.

SPRAGUE

Owner of Reg. Nos. 513,623 and 544,928.

Class 21—Electrical Apparatus, Machines, and Supplies

For Capacitors, Resistors, Inductors, Magnetic Amplifiers, Delay Lines, Pulse Transformers, Magnetic Cores, Magnetic Shift Registers, Radio Interference Filters, and Other Types of Electrical Wave Filters; Semiconductor Devices—Namely,

Transistors, Diodes and Integrated Circuits; Packaged Electrical and Electronic Circuits—Namely, Circuit Modules, Thin-Film and Thick-Film Passive and Hybrid Circuits, Piezo-Electric Transducers and Hydrophone Assemblies, Ceramic Substrates for Use in Hybrid Circuits, Primary Cells, Decade Boxes, and Electrical Phase Shifters, Phase Modulators, Peaking Networks, Pulse Generators for Controlling the Flow or Phase Relationship of Electric Power, and Enclosures Shielded Against Electromagnetic Influences (Int. Cl. 9).

Class 26—Measuring and Scientific Appliances

For Pulse Forming Networks, Radio Interference Locators, Capacitance Bridges, Capacitor Analyzers, and Equipment for Assembling and Testing of Semiconductor Devices (Int. Cl. 9).
First use July 1926.

SN 276,598. Mervyn Watts Ozier, Champaign, Ill. Filed July 24, 1967.

SNUG-EZE

Class 22—Games, Toys, and Sporting Goods

For Sleeping Bags for Outdoor, Campers' or Similar Recreational Use or Emergency Use (Int. Cl. 20).

Class 37—Paper and Stationery

For Sheets of Paper With Plastic Backing for Manufacture Into Other Products (Int. Cl. 16).

Class 42—Knitted, Netted, and Textile Fabrics, and Substitutes Therefor

For Blankets (Int. Cl. 24).

First use May 10, 1967.

SN 279,887. American Photocopy Equipment Company, Evanston, Ill. Filed Sept. 8, 1967.

MARATHON

Class 6—Chemicals and Chemical Compositions

For Activator Fluid for Photocopy Paper (Int. Cl. 1).

Class 26—Measuring and Scientific Appliances

For Sensitized Photocopy Paper (Int. Cl. 1).

First use Nov. 12, 1965.

SN 281,743. Harris and Thrust Manufacturing Company, Lubbock, Tex. Filed Oct. 4, 1967.

BIG 12

Class 19—Vehicles

For Agricultural Vehicles—Namely, Wagons, Grain Carts and Vehicles for Holding Grain or Other Agricultural Crops While the Crops Are Being Dried (Int. Cl. 12).

Class 23—Cutlery, Machinery, and Tools, and Parts Thereof

For Farm Implements—Namely, Harrows, Cultivators and Soil Conditioners (Int. Cl. 7).

First use June 17, 1960.

SN 281,745. International Textbook Company, Scranton, Pa. Filed Oct. 4, 1967.

SERVING THE NEED TO KNOW

Class 101—Advertising and Business

For Printing, Electrotyping, and Publishing Services (Int. Cl. 35).

Class 106—Material Treatment

For Bookbinding Services (Int. Cl. 40).

Class 107—Education and Entertainment

For Conducting Correspondence Courses and Inplant Training Programs for Others (Int. Cl. 41).

First use Sept. 18, 1967.

SN 282,159. American Cyanamid Company, Wayne, N.J. Filed Oct. 10, 1967.

DAVIS + GECK

Class 44—Dental, Medical, and Surgical Appliances

For Surgical Sponges and Nail Cleaner Implement (Int. Cls. 5 and 8).
First use June 14, 1967.

Class 51—Cosmetics and Toilet Preparations

For Shaving Foam (Int. Cl. 3).
First use Oct. 2, 1967.

SN 283,485. Sternco Industries, Inc., Harrison, N.J. Filed Oct. 27, 1967.

Sternco

Class 6—Chemicals and Chemical Compositions

For Preparations for Freshening Aquarium Water; and Sulphathiazole Sodium for Adding to Pet Bath Water (Int. Cl. 1).

Class 26—Measuring and Scientific Appliances

For Thermometers for Aquarium Use (Int. Cl. 9).

Class 46—Foods and Ingredients of Foods

For Food for Pets—Namely, Turtle and Fish Food (Int. Cl. 31).

First use Oct. 3, 1967.

SN 283,596. The Standard Products Company, Cleveland, Ohio. Filed Oct. 30, 1967.

SP

Class 12—Construction Materials

For Weather Strips, Seal Strips, Trim Strips, Glass Setting Tapes, All Primarily for Use in Connection With Doors and Windows (Int. Cl. 17).

Class 19—Vehicles

For Accelerator Pedals, Step or Scuff Plates, Gunwale Guards, Dock Bumpers, Window Channels, Seal Strips, Trim Strips and Mooring Snubbers, All Primarily for Use in Connection With Vehicles and Boats (Int. Cls. 12 and 17).

Class 35—Belting, Hose, Machinery Packing, and Nonmetallic Tires

For Gaskets (Int. Cl. 17).

First use at least as early as June 1961.

SN 285,966. Yardley of London, Inc., Totowa, N.J. Filed Nov. 29, 1967.

KHADINE

Class 51—Cosmetics and Toilet Preparations

For Perfumed Body Lotion, Perfumed Pomander and Perfumed Powder (Int. Cl. 3).

Class 52—Detergents and Soaps

For Perfumed Soap (Int. Cl. 3).

First use Nov. 15, 1967.

SN 292,151. Sternco Industries, Inc., Harrison, N.J. Filed Feb. 29, 1968.

Sternco

Class 6—Chemicals and Chemical Compositions

For Chemicals for Killing Fleas and Mites and for Deodorizing Animals Pets (Int. Cl. 5).
First use Dec. 11, 1967.

Class 18—Medicines and Pharmaceutical Preparations

For Medical Preparations for Animal Pets—Namely, Vitamin and Oil Preparations for Hardening Turtle Shells, Medications To Control Clamped Fins, Shock, Bacterial and Fungal Infections, and Other Disorders (Int. Cl. 5).
First use Dec. 7, 1967.

Class 21—Electrical Apparatus, Machines, and Supplies

For Aquarium Reflector Bulbs (Int. Cl. 11).
First use Jan. 17, 1968.

Class 31—Filters and Refrigerators

For Filter Material for Home Aquariums (Int. Cl. 1).
First use Feb. 5, 1968.

Class 46—Foods and Ingredients of Foods

Food for Hamsters, Dogs, Cats, Turtles, and Fish (Int Cl. 31).
First use Dec. 11, 1967.

Class 50—Merchandise Not Otherwise Classified

For Colored Particles for Use in Aquariums; and Fish Breeder Tanks (Int. Cl. 20).
First use Nov. 17, 1967.

SN 293,426. Alberto-Culver Company, Melrose Park, Ill. Filed Mar. 18, 1968.

GET SET

Owner of Reg. No. 731,649.

Class 51—Cosmetics and Toilet Preparations

For Hair Care Preparations—Namely, Hair Waving and Setting Lotions and Gels, Hair Sprays (Int. Cl. 3).
First use May 24, 1961.

Class 52—Detergents and Soaps

For Hair Shampoo (Int. Cl. 3).
First use at least January 1967.

SN 294,550. King Kullen Grocery Co., Inc., Westbury, N.Y. Filed Apr. 1, 1968.

Owner of Reg. Nos. 682,619, 826,486, and others.

Class 6—Chemicals and Chemical Compositions

For Borax and Water Softeners for Laundry Use (Int. Cl. 3).
First use May 6, 1965, on water softeners for laundry use.

Class 9—Explosives, Firearms, Equipments, and Projectiles

For Matches (Int. Cl. 34).
First use February 1958.

Class 18—Medicines and Pharmaceutical Preparations

For Aspirin, Mouthwashes, Saccharin, Hydrogen Peroxide, Petroleum Jelly, and Vitamins (Int. Cls. 1 and 5).
First use Apr. 16, 1962, on vitamins.

Class 29—Brooms, Brushes, and Dusters

For Tooth Brushes (Int. Cl. 21).
First use July 19, 1965.

Class 37—Paper and Stationery

For Toilet and Facial Tissues and Wax Paper (Int. Cl. 16).
First use Oct. 17, 1957, on facial tissues.

Class 46—Foods and Ingredients of Foods

For Canned Fruits and Fruit Cocktail, Canned Vegetables, Canned Baked Beans, Sauerkraut, Canned Potatoes and Sweet Potatoes, Canned Mushrooms, Tomato Juice, Canned Tomato Pastes and Purees, Canned and Bottled Fruit Juices, Prune Juice, Fruit Preserves Such as Cranberry Sauce, Canned Tuna, Frozen Vegetables, Frozen Concentrated Orange Juice, Frozen French Fried Potatoes, Frozen Waffles, Eggs in the Shell, Cheeses, Oleomargarine, Tartar Sauce, Mayonnaise, Salad Dressings, Salad, Baking and Frying Oil, Vegetable Derived Shortening, Evaporated Milk, Flavored, Vitamin-Amplified Milk Syrup, Coffee, Tea Bags, Peanut Butter, Raisins; and Crackers, Cookies and Snacks—Namely, Saltines, Crisp Crackers, Chocolate Chip Cookies, Chocolate Bon-Bons, and Popped Popcorn (Int. Cls. 29, 30, and 32).
First use December 1952 on cheese.

Class 48—Malt Beverages and Liquors

For Beer (Int. Cl. 32).
First use May 19, 1964.

Class 51—Cosmetics and Toilet Preparations

For Toothpaste and Hair Conditioner Creme Rinse (Int. Cl. 3).
First use October 1961 on tooth paste.

Class 52—Detergents and Soaps

For Hair Shampoo, Laundry and Dishwashing Detergents, and Household Cleaners With Ammonia (Int. Cl. 3).
First use Feb. 28, 1965, on hair shampoo.

SN 295,482. York, Feather & Down Corp., Brooklyn, N.Y. Filed Apr. 12, 1968.

TANOTIZED

Owner of Reg. No. 837,360.

Class 22—Games, Toys, and Sporting Goods

For Sleeping Bags Filled With Feathers and/or Down for Outdoor Campers or Similar Recreational Use (Int. Cl. 20).

Class 32—Furniture and Upholstery

For Pillows and Cushions Filled With Feathers /or Down (Int. Cl. 20).

Class 39—Clothing

For Men's, Women's, and Children's Cold Weather Coats and Ski Parkas Filled With Down (Int. Cl. 25).

First use May 1, 1967.

SN 295,557. Regal Ware, Inc., Kewaskum, Wis. Filed Apr. 12, 1968.

Society

Owner of Reg. No. 747,189.

Class 13—Hardware and Plumbing and Steam-Fitting Supplies

For Cooking Utensils—Namely, Saucepans, Chicken Fryers, and Dutch Ovens (Int. Cls. 11 and 21).
First use Sept. 5, 1964.

Class 21—Electrical Apparatus, Machines, and Supplies

For Electric Frying Pans (Int. Cl. 11).
First use Jan. 26, 1968.

SN 298,890. International Textbook Company, Scranton, Pa. Filed May 23, 1968.

INTEXT

Class 101—Advertising and Business

For Printing, Electrotyping, and Publishing Services (Int. Cl. 35).

Class 106—Material Treatment

For Bookbinding Services (Int. Cl. 40).

Class 107—Education and Entertainment

For Conducting Correspondence Courses and Inplant Training Programs (Int. Cl. 41).
First use Mar. 26, 1968.

SECTION 2

The following marks are published in compliance with section 12(a) of the Trademark Act of 1946. Opposition under section 13 may be filed within thirty days of publication. See Rules 2.101 to 2.105.

A fee of twenty-five dollars must accompany the opposition.

[NOTE: For publication of marks presented in a combined application for registration in more than one class, see section 1.]

Class 1 — Raw or Partly Prepared Materials

SN 262,439. Philmont Manufacturing Company, Englewood, N.J. Filed Jan. 12, 1967.

LECTROQUILT

For Dielectric Quilted Plastic Sheets for General Use in the Industrial Arts as a Covering Material (Int. Cl. 17).
First use Dec. 20, 1966.

SN 277,967. Adhesive Products Corporation, Bronx, N.Y. Filed S.R. Aug. 10, 1967; Am. P.R. June 28, 1968.

FOAMART

For Materials Which Consist of Two Different Liquids Sold as a Unit and Which, When Mixed Together, Are Used for Mixing-in-Place Foamed Plastics (Int. Cl. 1).
First use June 15, 1966.

SN 279,430. The Polymer Corporation, Reading, Pa. Filed Aug. 31, 1967.

NYLATRON

Owner of Reg. No. 538,608.
For Molding Compounds and Filled or Unfilled Plastic and Polymeric Materials in the Form of Powder, Granulation, Diced, Pellet, Rod, Bar, Plate, Strip, Sheet, Tube, and Other Shapes (Int. Cls. 1 and 17).
First use May 10, 1949.

SN 286,189. Standard Oil Company of California, San Francisco, Calif. Filed Dec. 4, 1967.

For Synthetic Fibers (Int. Cl. 22).
First use June 30, 1966.

SN 296,542. Kanegafuchi Boseki Kabushiki Kaisha, d.b.a. Kanegafuchi Spinning Co., Ltd., Miyakojima-ku, Osaka, Japan. Filed Apr. 25, 1968.

KANEBO

For Synthetic Leather (Int. Cl. 18).
First use at least as early as February 1967; in commerce Mar. 11, 1968.

SN 297,126. Ametek, Inc., New York, N.Y. Filed May 2, 1968.

AMETEK

The drawing is lined for the color red. Owner of Reg. Nos. 744,348, 794,058, and others.
For Thermoplastic Molding Composition Principally of Asphalt and Resin (Int. Cl. 1).
First use May 1, 1968.

Class 2 — Receptacles

SN 233,728. Nibot Corporation, Chicago, Ill. Filed Dec. 1, 1965.

FAMILY-SERV

For Containers for Distributing and Dispensing Fluids, Such as Milk and the Like (Int. Cl. 20).
First use October 1964.

SN 266,330. Hedwin Corporation, New York, N.Y. Filed Mar. 9, 1967.

MATRAY

For Rigid Trays for Use as Table Placemats or Lap Trays (Int. Cl. 21).
First use Jan. 18, 1967.

SN 276,480. Silver Industries, Inc., Norwich, Conn. Filed July 20, 1967.

PRESSPACK

For Molded Telescoping Plastic Containers for Dispensing Flowable Materials of Cream-Like Consistency, Such as Pharmaceutical and Medicinal Preparations (Int. Cl. 20).
First use July 6, 1967.

SN 277,562. Roy C. Martin, d.b.a. Saturn Sales Company, Boston, Mass. Filed Aug. 4, 1967.

CADDYCAB

For Tool Boxes and Tackle Cabinets (Int. Cl. 20).
First use July 31, 1967.

SN 278,618. Tee-Pak, Inc., Chicago, Ill. Filed Aug. 18, 1967.

SATEEN

For Synthetic Sausage Casings (Int. Cl. 18).
First use June 1, 1966.

SN 278,747. Tee-Pak, Inc., Chicago, Ill. Filed Aug. 21, 1967.

CORIA

For Edible Synthetic Sausage Casings (Int. Cl. 18).
First use June 27, 1967.

SN 278,905. Oppenheimer Casing Company, Chicago, Ill. Filed Aug. 23, 1967.

SUPERNAL

For Edible Synthetic Sausage Casings (Int. Cl. 18).
First use June 30, 1967.

SN 281,586. Kolmor Chemicals, Chicago, Ill. Filed Oct. 2, 1967.

KOLLMEX

For Edible Sausage Casings (Int. Cl. 18).
First use Sept. 14, 1967.

SN 286,149. International Paper Company, New York, N.Y. Filed Dec. 4, 1967.

CHICK CRADLE

For Corrugated Paperboard Containers (Int. Cl. 16).
First use Nov. 15, 1967.

SN 288,352. Rodl Mfg., Inc., Santa Cruz, Calif. Filed Jan. 8, 1968.

SPRAY-'N-GO-GO

For Aerosol Dispensers (Int. Cl. 20).
First use on or about Nov. 1, 1966.

SN 289,560. Medical Plastics Corporation of America, Greensboro, N.C. Filed Jan. 25, 1968.

MEDI-GARD

Owner of Reg. No. 829,172.
For Waste Can Safety Liner, and Storage Bags, Laundry Bags, and Diaper Bags (Int. Cl. 21).
First use July 9, 1965.

SN 294,358. Packaging Corporation of America, Evanston, Ill. Filed Mar. 28, 1968.

TOP-NOTCH

Formed Cartons for Eggs or Other Fragile Articles (Int. Cl. 16).
First use on or about Feb. 14, 1968.

SN 294,735. Hudson Pulp & Paper Corp., New York, N.Y. Filed Apr. 2, 1968.

TIDY SACK

Applicant disclaims the exclusive right in the word "Sack" apart from the mark as shown. Owner of Reg. Nos. 587,572, 687,122, and 820,543.
For Disposable Sacks and Bags, Particularly for Garbage and Other Refuse (Int. Cl. 16).
First use about February 1966.

SN 296,179. Betty Martin, Inc., Beverly Hills, Calif. Filed Apr. 22, 1968.

MINIFIL

For Refillable Spray Dispensers (Int. Cl. 20).
First use May 20, 1966.

SN 296,365. Wagner Folding Box Corp., Buffalo, N.Y. Filed Apr. 23, 1968.

REDI-KWIK

For Folding Carry-Out Box (Int. Cl. 16).
First use Mar. 5, 1968.

SN 296,695. Don Kracke, d.b.a. Rickie Tickie Stickies, Long Beach, Calif. Filed Apr. 26, 1968.

COLLECTOR'S ITEM

For Waste Receptacles (Int. Cl. 21).
First use Mar. 20, 1968.

SN 296,861. Niagara Foam Products, Inc., Mount Clemens, Mich. Filed Apr. 29, 1968.

PERF-O-TAINER

For Flower and Foliage Holders (Int. Cl. 21).
First use in or about April 1964.

SN 297,545. Electrix, Inc., Port Chester, N.Y. Filed May 7, 1968.

GEOMETRIX

Owner of Reg. Nos. 778,162 and 779,026.
For Storage Containers (Int. Cl. 20).
First use Apr. 30, 1968.

Class 3 — Baggage, Animal Equipments, Portfolios, and Pocketbooks

SN 269,438. Master Appliances, Inc., Marion, Ind. Filed Apr. 18, 1967.

LA RONDE

The English equivalent of the foreign expression "La Ronde" is "the round."
For Carrying Case for the Transportation and Storage of Wigs and Wiglets (Int. Cl. 18).
First use Dec. 9, 1966.

Class 5 — Adhesives

SN 298,296. Wilhold Glues, Inc., Santa Fe Springs, Calif. Filed May 16, 1968.

GLU-BOY

Owner of Reg. Nos. 604,378, 802,507, and others.
For General Purpose Glue (Int. Cl. 1).
First use Sept. 6, 1957.

Class 6 — Chemicals and Chemical Compositions

SN 273,309. Reilly Tar & Chemical Corporation, Indianapolis, Ind. Filed June 7, 1967.

DI-PIP

For Chemical Compound Having Two Reactive Piperidyl Substituents (Int. Cl. 1).
First use June 28, 1965.

SN 275,283. Mermac Distributors of Oregon, Salem, Oreg. Filed July 3, 1967.

Mermac

For Shoe and Leather Dressing, Preservative, and Waterproofing Composition (Int. Cl. 1).
First use Sept. 6, 1966.

SN 276,113. Epic Chemicals, Inc., Brooklyn, N.Y. Filed July 17, 1967.

E-Z MELT

Owner of Reg. No. 708,201.
For Chemical Preparation for Melting Snow and Ice (Int. Cl. 1).
First use Sept. 15, 1959.

SN 277,894. Detrex Chemical Industries, Inc., Detroit, Mich. Filed Aug. 9, 1967.

DETRON-D

For Halogenated Hydrocarbon Industrial Solvent (Int. Cl. 1).
First use July 12, 1967.

SN 282,688. Denver Chemical Manufacturing Company, Stamford, Conn., assignee of The Denver Chemical Manufacturing Company, d.b.a. Wampole Laboratories, Stamford, Conn. Filed Oct. 17, 1967.

DAP-TEST

For Diagnostic Laboratory Reagent To Detect Pregnancy (Int. Cl. 1).
First use Oct. 6, 1967.

SN 283,776. Dehydag Deutsche Hydrierwerke G.m.b.H., Dusseldorf, Germany. Filed Oct. 31, 1967.

VISCONTRAN

Owner of German Reg. No. 755,400, dated Dec. 21, 1959.
For Dispersing, Emulsifying and Stabilizing Agents for Use in the Manufacture of Cosmetic and Pharmaceutical Preparations (Int. Cl. 1).

SN 283,778. Dehydag Deutsche Hydrierwerke G.m.b.H., Dusseldorf, Germany. Filed Oct. 31, 1967.

TEXAMID

Owner of German Reg. No. 660,957, dated Mar. 14, 1952.
For Thickening Agents for Use in the Manufacture of Cosmetic and Pharmaceutical Preparations (Int. Cl. 1).

SN 283,779. Dehydag Deutsche Hydrierwerke G.m.b.H., Dusseldorf, Germany. Filed Oct. 31, 1967.

DEHYDAZOL

Owner of German Reg. No. 543,194, dated June 6, 1941.
For Thickening, Dispersing and Stabilizing Agents for Use in the Manufacture of Cosmetic and Pharmaceutical Preparations (Int. Cl. 1).

SN 285,073. Stauffer Chemical Company, New York, N.Y. Filed Nov. 16, 1967.

TRIANGLE

Owner of Reg. No. 500,311.
For Sulfur (Int. Cl. 1).
First use at least as early as June 12, 1917.

SN 285,183. Armour Pharmaceutical Company, d.b.a. Rehels Chemical Company, Chicago, Ill. Filed Nov. 20, 1967.

F-1000

For Aluminum Hydroxide Gels (Int. Cl. 1).
First use on or prior to Jan. 1, 1947.

SN 285,184. Armour Pharmaceutical Company, d.b.a. Rehels Chemical Company, Chicago, Ill. Filed Nov. 20, 1967.

F-2000

For Aluminum Hydroxide Gels (Int. Cl. 1).
First use on or prior to Jan. 1, 1947.

SN 285,185. Armour Pharmaceutical Company, d.b.a. Rehels Chemical Company, Chicago, Ill. Filed Nov. 20, 1967.

F-2200

For Aluminum Hydroxide Gels (Int. Cl. 1).
First use on or prior to July 1, 1953.

SN 285,186. Armour Pharmaceutical Company, d.b.a. Rehels Chemical Company, Chicago, Ill. Filed Nov. 20, 1967.

F-5000

For Aluminum Hydroxide Gels (Int. Cl. 1).
First use on or prior to July 1, 1955.

SN 285,187. Armour Pharmaceutical Company, d.b.a. Rehels Chemical Company, Chicago, Ill. Filed Nov. 20, 1967.

F-MA 11

For Gels Containing Aluminum Hydroxide and Magnesium Carbonate (Int. Cl. 1).
First use on or prior to July 1, 1957.

SN 298,895. E. I. du Pont de Nemours and Company, Wilmington, Del. Filed May 23, 1968.

AHEAD

For Laundry Bleach (Int. Cl. 3).
First use Mar. 20, 1968.

SN 298,907. Uni-Tech Chemical Manufacturing Company, Sun Valley, Calif. Filed May 23, 1968.

GLUCODINE

For Laboratory Reagent for Use in the Colorimetric Determination of Glucose (Int. Cl. 1).
First use on or before May 1, 1968.

SN 298,992. E. I. du Pont de Nemours and Company, Wilmington, Del. Filed May 24, 1968.

LANNATE

For Nematocide (Int. Cl. 5).
First use Apr. 23, 1968.

Class 7 — Cordage

SN 298,908. Frank W. Winne & Son Incorporated, Philadelphia, Pa. Filed May 23, 1968.

WINMORE

Owner of Reg. No. 503,221.
For Sisal Cordage, Sisal Baler Twine, and Synthetic Fiber Cordage (Int. Cl. 22).
First use Dec. 31, 1958.

Class 8 — Smokers' Articles, Not Including Tobacco Products

SN 292,754. Arlington Briar Pipe Corp., Brooklyn, N.Y. Filed Mar. 8, 1968.

PIPE BY Lee

No registration rights are claimed for the word "Pipe" apart from the mark shown in the drawing; but applicant waives none of its common law rights on the mark shown in the drawing or any feature thereof.
For Pipes (Int. Cl. 34).
First use Feb. 8, 1968.

Class 10 — Fertilizers

SN 281,100. National Sulphur Company, Midland, Tex. Filed Sept. 25, 1967.

SOL-U-SUL

For Chemical Fertilizer (Int. Cl. 1).
First use Aug. 15, 1967.

SN 281,379. Lindauer & Company, San Francisco, Calif. Filed Sept. 20, 1967.

R

The drawing is lined for the color red. Applicant disclaims the exclusive use of the word "Brand" apart from the mark as shown.
For Soil Conditioner Consisting of Pulverized Aged Redwood Sawdust and Shaving Humus (Int. Cl. 1).
First use June 24, 1959.

SN 294,053. D. C. Jorgensen & Sons, Inc., St. Ansgar, Iowa. Filed Mar. 25, 1968.

CROP POWER

For Chemical Fertilizer (Int. Cl. 1).
First use Feb. 16, 1968.

SN 297,578. Mississippi Chemical Corporation, Yazoo City, Miss. Filed May 7, 1968.

PERMALENE

For Ammonium Nitrate Fertilizer (Int. Cl. 1).
First use Feb. 20, 1968.

SN 297,579. Mississippi Chemical Corporation, Yazoo City, Miss. Filed May 7, 1968.

PERMA-PELLET

For Ammonium Nitrate Fertilizer (Int. Cl. 1).
First use Feb. 20, 1968.

SN 297,580. Mississippi Chemical Corporation, Yazoo City, Miss. Filed May 7, 1968.

PERMA-GRAN

For Ammonium Nitrate Fertilizer (Int. Cl. 1).
First use Feb. 20, 1968.

SN 297,581. Mississippi Chemical Corporation, Yazoo City, Miss. Filed May 7, 1968.

PERMA-PRILL

For Ammonium Nitrate Fertilizer (Int. Cl. 1).
First use Feb. 20, 1968.

Class 11—Inks and Inking Materials

SN 280,791. Litton Business Systems, Inc., New York, N.Y. Filed Sept. 20, 1967.

ROYTYPE 101

Owner of Reg. Nos. 214,474, 614,162, and others.
For Carbon Paper (Int. Cl. 16).
First use on or about Apr. 10, 1967.

SN 288,673. Burroughs Corporation, Detroit, Mich. Filed Jan. 12, 1968.

B

Owner of Reg. Nos. 505,355 and 505,356.
For Inking Ribbons Used With Business Machines—Namely, Adding Machines, Accounting Machines, Calculating Machines, Cash Registers, Printers, Typewriters, Check Writers, and Signers, and the Like; Carbon Paper; and Reproductive Transfer or Copy Paper Containing an Inking Material (Int. Cl. 16).
First use Apr. 16, 1947.

Class 12—Construction Materials

SN 266,893. Kenton Industries, d.b.a. Home Equipment Mfg. Company, Stanton, Calif. Filed Mar. 16, 1967.

BEAUTY TRIM

Applicant disclaims the word "Trim" apart from the mark as shown.
For Ceramic Tile, and Bathtub and Shower Tile Edging (Int. Cl. 17).
First use Jan. 6, 1967.

SN 280,249. Philip Carey Corporation, Cincinnati, Ohio, by change of name from The Philip Carey Manufacturing Company, Cincinnati, Ohio. Filed Sept. 13, 1967.

CAREYTEMP

Owner of Reg. Nos. 575,360, 786,273, and others.
For Molded Heat Insulating Materials, Composed Principally of Expanded Perlite, in the Form of Blocks, Half Sections, and in Forms Molded To Fit Various Pipe Fittings (Int. Cl. 17).
First use Mar. 4, 1959.

SN 287,925. Luminous Ceilings, Inc., Chicago, Ill. Filed Jan. 2, 1968.

QUARTETTE

For Ceiling Modules Adapted To Be Suspended From the Overhead and Comprised of Units for Concealing Electrical Wiring Supplying Luminaries Supported Thereby, of Units for Conducting Heated and Conditioned Air Supplied From Sources Not a Part of Such Ceiling Module, and Components Thereof (Int. Cl. 19).
First use in or about December 1964.

Class 13—Hardware and Plumbing and Steam-Fitting Supplies

SN 273,507. Lance Construction Supplies Inc., Chicago, Ill. Filed June 9, 1967.

PLA-BORDER

For Plastic and Metallic Borders and Edgings for Ornamental Gardens, Driveways, Sidewalks and Other Decorative Landscape Purposes, and Also Water Conduit, Sprinklers and Sprinkler Systems (Int. Cls. 6, 11, and 20).
First use on or before Apr. 18, 1967.

SN 275,951. Mid-Continent Manufacturing Co., Columbus, Ohio. Filed July 13, 1967.

ARRO

Owner of Reg. No. 535,169.
For Fastening Devices, Such as Masonry Fasteners, Hollow Wall Fasteners, Drilling Devices, and Accessories (Int. Cl. 6).
First use Apr. 23, 1929.

SN 276,134. Hays Manufacturing Company, Erie, Pa. Filed July 17, 1967.

SOLUTAP

For Wet (Pressure) Taps in Water Mains (Int. Cl. 11).
First use Feb. 5, 1967.

SN 279,959. Saegertown Manufacturing Corporation, Saegertown, Pa. Filed Sept. 8, 1967.

smc

For Metal Couplings (Int. Cl. 7).
First use May 27, 1965.

SN 282,639. Trefileries Leon Bekaert, P.V.B.A., Zwevegem, Belgium. Filed Oct. 16, 1967.

ALUTOR

Owner of Belgian Reg. No. 3,960, dated June 21, 1967; and U.S. Reg. Nos. 804,521 and 804,523.
For Wire Netting and Wire Mesh, and Fencing Made Therefrom, Featuring an Aluminum Coating (Int. Cl. 6).

SN 283,467. Wm. Steinen Mfg. Co., Parsippany, N.J. Filed Oct. 26, 1967.

STEINEN DYNA-COIN

Owner of Reg. Nos. 603,967, 727,994, and others.
For Spray Nozzles for Liquids (Int. Cl. 11).
First use Oct. 15, 1966; January 1925 as to "Steinen."

SN 284,628. Dennison Manufacturing Company, Framingham, Mass. Filed Nov. 13, 1967.

SECUR-A-TACH

For Tag Fasteners (Int. Cl. 6).
First use Aug. 18, 1967.

SN 284,757. Thermo Tech Inc., Denver, Colo. Filed Nov. 13, 1967.

FLEXPAND

For Flexible Metal Tubing and Connectors (Int. Cl. 6).
First use on or about June 5, 1962.

SN 284,953. Universal Metal Products, Inc., Wickliffe, Ohio. Filed Nov. 15, 1967.

UMP

For Spring Clamps for Flexible Hose and Spring Clips (Int. Cl. 6).
First use on or about Aug. 30, 1967.

SN 298,993. National Distillers and Chemical Corporation, New York, N.Y. Filed May 24, 1968.

DURABLE SWINGER

For Plastic Handles (Int. Cl. 20).
First use Sept. 22, 1967.

Class 14—Metals and Metal Castings and Forgings

SN 275,423. Alcan Aluminum Corporation, Cleveland, Ohio. Filed July 6, 1967.

SPECTRUM 21

For Painted Aluminum Sheet Material (Int. Cl. 6).
First use June 14, 1967.

SN 286,621. American Gage & Machine Company, Chicago, Ill. Filed Dec. 11, 1967.

USAmet

Applicant disclaims the letters "USA" apart from the mark as shown.
For Metal Alloys (Int. Cl. 6).
First use Nov. 3, 1967.

Class 15—Oils and Greases

SN 163,372. Kerns United Corporation, Philadelphia, Pa., assignee of Keystone Lubricating Company, Calumet City, Ill. Filed Feb. 25, 1963.

KEYCAST

Owner of Reg. No. 383,218.
For Oil Base Die Casting Compound Containing Aluminum Powder (Int. Cl. 4).
First use Dec. 21, 1962.

SN 293,982. Farmers Regional Cooperative, Fort Dodge, Iowa. Filed Mar. 25, 1968.

KNOCK-DOWN

For Crop Oil for Use in the Application of Herbicides and the Like (Int. Cl. 4).
First use on or about Feb. 2, 1968.

Class 16—Protective and Decorative Coatings

SN 259,389. Armstrong Paint & Varnish Works, Inc., Chicago, Ill. Filed Nov. 25, 1966.

ARMA·GLAS

For Glass Flake Coatings, Containing Flakes of Glass in Various Types of Synthetic or Natural Vehicles—Namely, Paints, Enamels, Lacquers, and Varnishes (Int. Cl. 2).
First use Nov. 15, 1966.

SN 288,607. The Firestone Tire & Rubber Company, Akron, Ohio. Filed Jan. 11, 1968.

PERMA LASTIC

Owner of Reg. Nos. 615,629 and 647,281.
For Metal and Wood Sealing Compounds, and Synthetic and Natural Resin Coatings for Wood, Metal, Concrete, and Other Surfaces (Int. Cl. 2).
First use Aug. 2, 1967.

Class 17—Tobacco Products

SN 293,723. Samuel B. Jacobs, Hoboken, N.J. Filed Mar. 20, 1968.

FLOR DE MONTEGO

The mark is Spanish for "flower of Montego."
For Cigars (Int. Cl. 34).
First use on or about May 15, 1964.

Class 18—Medicines and Pharmaceutical Preparations

SN 266,079. Palmedico, Inc., Columbia, S.C. Filed Mar. 6, 1967.

ProReNata

For Analgesic Sedative, Antipyretic Preparation (Int. Cl. 5).
First use July 1959.

SN 269,326. Lazarus Laboratories, Inc., Long Island City, N.Y. Filed Apr. 17, 1967.

BOVADINE

For Germicidal Preparation for Dipping Cows' Teats (Int. Cl. 5).
First use Apr. 1, 1966.

SN 271,528. Sauter Laboratories, Inc., Nutley, N.J. Filed May 15, 1967.

C-BREAK

For Effervescent Vitamin Supplement (Int. Cl. 5).
First use Apr. 28, 1967.

SN 284,093. S. S. Kresge Company, Detroit, Mich. Filed Nov. 3, 1967.

Owner of Reg. Nos. 743,912, 817,528, and others.
For Vitamins (Int. Cl. 5).
First use on or before Sept. 20, 1967.

SN 284,119. The Wander Company, Lincoln, Nebr. Filed Nov. 3, 1967.

DORPAP

For Preparation To Be Used as a General Analgesic (Int. Cl. 5).
First use Oct. 3, 1967.

SN 284,121. The Wander Company, Lincoln, Nebr. Filed Nov. 3, 1967.

DORSPEC

For Preparation To Be Used in the Treatment of Upper Respiratory Infection (Int. Cl. 5).
First use Oct. 3, 1967.

SN 297,961. Bristol-Myers Company, New York, N.Y. Filed May 13, 1968.

FLEXICIL

For Antibiotic Preparation (Int. Cl. 5).
First use Apr. 5, 1968.

Class 19—Vehicles

SN 262,704. Horville-McKinnon Limited, Sidcup, Kent, England. Filed Jan. 17, 1967.

UNITAINER

Priority claimed under Sec. 44(d) on British Reg. No. 897,335, dated July 19, 1966.
For Hand Trucks and Dollies, and Parts Therefor (Int. Cl. 12).

SN 274,945. Robert E. Blair, d.b.a. Gateway Industries, Maryville, Tenn. Filed June 28, 1967.

For Pick-Up Truck Campers and Camping Trailers (Int. Cl. 12).
First use May 25, 1967.

SN 275,284. William D. Miller, Portland, Oreg. Filed July 3, 1967.

PLY-PAK
EQUIPPED

The word "Equipped" is disclaimed apart from the mark as a whole.
For Extruded Structural Aluminum Shapes To Be Placed in a Vertical Position in Railroad Freight Cars To Lock Paneled Products From Side and End Shifting in the Car (Int. Cl. 6).
First use Dec. 1, 1966.

SN 285,016. General Motors Corporation, Detroit, Mich. Filed Nov. 16, 1967.

LONGHORN

For Light Trucks (Int. Cl. 12).
First use Oct. 24, 1967.

SN 287,162. Fireball Trailer Mfg., Inc., San Fernando, Calif. Filed Dec. 18, 1967.

WANDERER

For Self-Propelled Mobile Homes (Int. Cl. 12).
First use Nov. 17, 1967.

Class 20—Linoleum and Oiled Cloth

SN 285,508. American Biltrite Rubber Co., Inc., Trenton, N.J. Filed Nov. 24, 1967.

FOAM-STEP CUSHIONED

For Vinyl Floor Coverings (Int. Cl. 27).
First use Oct. 26, 1967.

SN 297,382. L. E. Carpenter & Company, Wharton, N.J. Filed May 6, 1968.

VICRTEXURES

Owner of Reg. Nos. 435,903, 814,154, and others.
For Vinyl Wall Covering (Int. Cl. 27).
First use on or about Mar. 25, 1968.

Class 21—Electrical Apparatus, Machines, and Supplies

SN 252,253. Electri-Flex Company, Roselle, Ill., by change of name from Electriflex Co., Roselle, Ill. Filed Aug. 12, 1966.

ELECTRI-FLEX

For Flexible Electrical Conduit, and Fluorescent Light Fixture Hangers (Int. Cl. 9).
First use at least as early as 1955.

SN 263,098. Methode Electronics, Inc., Chicago, Ill. Filed Jan. 23, 1967.

OMNY-BUS

For Electric Power Distribution Bus Assemblies (Int. Cl. 9).
First use July 27, 1966.

SN 264,010. Amaco Magnetics Incorporated, Moline, Ill. Filed Feb. 6, 1967.

AGMAG

For Magnetic Equipment and Machines Used in Agriculture—Namely, Magnetic Sweepers, Magnetic Welding Clamps, and Livestock Magnets (Int. Cls. 7 and 9).
First use Oct. 10, 1966.

SN 266,873. Fuse Indicator Corporation, Rockville, Md. Filed Mar. 16, 1967.

For Wall Plates for Electrical Switches (Int. Cl. 9).
First use Nov. 9, 1945.

SN 271,726. F. W. Reynolds Limited, Surbiton, Surrey, England. Filed May 17, 1967.

POPAMP

Priority claimed under Sec. 44(d) on British Reg. No. 902,779, dated Dec. 9, 1966.
For Amplifiers and Parts Thereof (Int. Cl. 9).

SN 272,147. Allis-Chalmers Manufacturing Company, Milwaukee, Wis. Filed May 23, 1967.

STA-PAK

For Static Electronic Controls for Circuit Breakers and Reclosers (Int. Cl. 9).
First use August 1965.

SN 275,380. Kirsch Company, Sturgis, Mich. Filed July 5, 1967.

ELECTRAC

For Traverse Rods, Linear Motor Assemblies Featuring Electrified Rails and Control Switches Along With Components for Same (Int. Cl. 9).
First use June 9, 1967.

SN 277,397. Waldom Electronics, Incorporated, Chicago, Ill. Filed Aug. 2, 1967.

Without waiver of any common law rights, the terms "Cell" and "D-Cell" are disclaimed apart from the mark as shown. The drawing is lined for the colors red and gold, but no claim is made to color.
For Rechargeable Storage Batteries (Int. Cl. 9).
First use June 5, 1967.

SN 277,727. Superior Continental Corporation, Hickory, N.C., by change of name from Superior Cable Corporation, Hickory, N.C. Filed Aug. 7, 1967.

EDS

For Electronic Distribution Systems—Namely, Central Office and Subscriber Carrier Units for a Telephone System, for Connection to an Existing Cable Pair, Both at the Central Office and at the Subscriber's Location So That an Additional Circuit and an Additional Telephone Set Can Be Supplied at the Subscriber's Location (Int. Cl. 9).
First use October 1965.

SN 278,251. Superior Continental Corporation, Hickory, N.C., by change of name from Superior Cable Corporation, Hickory, N.C. Filed Aug. 14, 1967.

For Electronic Distribution Systems—Namely, Central Office and Subscriber Carrier Units for a Telephone System, for Connection to an Existing Cable Pair, Both at the Central Office and at the Subscriber's Location So That an Additional Circuit and an Additional Telephone Set Can Be Supplied at the Subscriber's Location (Int. Cl. 9).
First use Feb. 12, 1966.

SN 278,671. Del Electronics Corp., Mount Vernon, N.Y. Filed Aug. 21, 1967.

SILVERCAP

For Capacitors (Int. Cl. 9).
First use July 10, 1967.

SN 279,055. Dahlberg Electronics, Inc., Minneapolis, Minn. Filed Aug. 25, 1967.

MILLIFILM

For Integrated Circuitry Used in Electronic Instruments (Int. Cl. 9).
First use Aug. 15, 1967.

SN 279,629. Colonial Electric & Specialty Co., Inc., Northridge, Calif. Filed Sept. 5, 1967.

For Push Button Control Stations for Use as Actuating Switches in Association With Electrical Contactors (Int. Cl. 9).
First use on or about Aug. 17, 1967.

SN 280,782. Jerrold Electronics Corporation, Philadelphia, Pa. Filed Sept. 20, 1967.

COLORPEAK

For Television Antennas (Int. Cl. 9).
First use on or about Feb. 28, 1967.

SN 281,282. Fire Detection Limited, London, England. Filed Sept. 27, 1967.

DEMON

Owner of British Reg. No. 865,097, dated June 3, 1964.
For Battery Powered Electric Fire and Burglar Alarms (Int. Cl. 9).

SN 282,925. The Raymond Corporation, Greene, N.Y. Filed Oct. 19, 1967.

RAYMOND

For Electric Motors, Motor Brushes, Armatures, Contactors, Electric Switches, Horns, Relays, Rectifiers, Resistors, Fuses, Plugs, Potentiometers, Transformers, Capacitors, Electric Battery Discharge Indicators, and Connectors (Int. Cls. 7 and 9).
First use at least as early as November 1950.

SN 283,577. The Ruby Lighting Corporation, New York, N.Y. Filed Oct. 27, 1967.

POST A WARM WELCOME

For Electrified Post Lights (Int. Cl. 11).
First use on or about Oct. 1, 1967.

SN 284,372. IMC Magnetics Corp., Westbury, N.Y. Filed Nov. 8, 1967.

MINI BOXER

Owner of Reg. No. 777,290.
For Electric Fans (Int. Cl. 11).
First use June 30, 1967.

SN 285,774. W & H Service Co., Alhambra, Calif. Filed Nov. 28, 1967.

ENGINETROL

For Electrically Regulated Apparatus for Maintaining the Speed of an Engine Within a Preselected Range Independent of Changes in Engine Load (Int. Cl. 9).
First use Apr. 11, 1967.

SN 286,170. The Perkin-Elmer Corporation, Norwalk, Conn. Filed Dec. 4, 1967.

VERNISWITCH

For Electrical Commutators (Int. Cl. 9).
First use Mar. 9, 1967.

SN 286,540. Lighting Products, Inc., Highland Park, Ill. Filed Dec. 8, 1967.

SERENITY

For Lighting Fixtures (Int. Cl. 11).
First use Oct. 18, 1967.

SN 286,810. Clarion Shoji Co., Ltd. (U.S.A.), Los Angeles, Calif. Filed Dec. 13, 1967.

CLASONIC

For Automobile and Home Radios (Int. Cl. 9).
First use Aug. 7, 1966.

SN 287,817. Grant Industries Incorporated, Los Angeles, Calif. Filed Dec. 29, 1967.

FLAMETHROWER

For Ignition Systems for Internal Combustion Engines, and Parts and Components Thereof—Namely, Coils, Condensers, Distributors, Distributor Parts, Electronic Amplifiers, and Electrical Lines (Int. Cl. 9).
First use in 1954.

SN 290,279. General Electric Company, Plainville, Conn. Filed Feb. 5, 1968.

VU-BREAK

For Electric Circuit Breaker (Int. Cl. 9).
First use in or before December 1961.

SN 293,138. High Vacuum Electronics, Inc., South Pasadena, Calif. Filed Mar. 13, 1968.

KILOCAP

Owner of Reg. No. 824,815.
For Evacuated Electronic Components—Namely, Vacuum Relays and Vacuum Capacitors (Int. Cl. 9).
First use July 19, 1967.

SN 293,399. The Pyle-National Company, Chicago, Ill. Filed Mar. 15, 1968.

ORBLITE

Owner of Reg. No. 672,737.
For Electric Lighting Fixtures (Int. Cl. 11).
First use 1958; Oct. 11, 1957, in its plural form "Orblites."

SN 297,169. C. P. Clare & Company, Chicago, Ill. Filed May 2, 1968.

PICOCLAREED

Owner of Reg. Nos. 711,476 and 792,150.
For Electromagnetically and Magnetically Operated Relays and Switching Assemblies (Int. Cl. 9).
First use April 1968.

298,499. Century Lighting, Inc., Clifton, N.J. Filed May 20, 1968.

CCR

For Electronic Dimmer for Stage Lighting (Int. Cl. 11).
First use at least as early as 1962.

Class 22—Games, Toys, and Sporting Goods

SN 268,228. The Saturn Corporation, Denver, Colo. Filed Apr. 3, 1967.

SPUFO

For Flying Toys in the Nature of Kites and Inflatable Flying Toys (Int. Cl. 28).
First use on or about Mar. 15, 1967.

SN 270,095. Wymar, P.V.B.A., Izegem, Belgium. Filed Apr. 26, 1967.

SwimJet

The word "Swim" is disclaimed except when used as part of the compound mark. Owner of Belgian Reg. No. 3620/64, dated Feb. 18, 1964.
For Swimming Aid, Worn on the Wrist To Increase Swimming Speed in Water (Int. Cl. 28).

SN 276,544. Anne C. Delaney, Waltham, Mass. Filed July 21, 1967.

VOWEL OWL

No claim is made to the word "Owl" apart from the mark without waiving any common law rights therein.
For Stuffed Toys (Int. Cl. 28).
First use Apr. 22, 1967.

SN 280,455. OK Fishing Tackle Company, Tulsa, Okla. Filed Sept. 15, 1967.

OK

For Fishing Lures and Fishing Tackle (Int. Cl. 28).
First use Sept. 30, 1965.

SN 280,456. OK Fishing Tackle Company, Tulsa, Okla. Filed Sept. 15, 1967.

OK

For Fishing Lures and Fishing Tackle (Int. Cl. 28).
First use Sept. 30, 1965.

SN 283,257. La Verne Mfg. Co., Gardena, Calif. Filed Oct. 24, 1967.

Custom by La Verne

The words "Custom by" are disclaimed apart from the mark as shown.
For Fishing Rods (Int. Cl. 28).
First use May 1965.

SN 285,837. Ithaca Music-Art Publishers, Inc., Ithaca, N.Y. Filed Nov. 29, 1967.

IMA

For Jigsaw Puzzles (Int. Cl. 28).
First use Oct. 1, 1967.

SN 286,499. Blazon, Inc., Akron, Ohio. Filed Dec. 8, 1967.

SKIPSY DOODLE

For General Purpose Indoor and Outdoor Activity Toy for Such Uses as Rocking, Balancing, Teetering, Sliding on and Snow Sliding (Int. Cl. 28).
First use Nov. 9, 1967.

SN 288,249. World Famous Sales, Inc., Chicago, Ill. Filed Jan. 5, 1968.

SURE SHOT

For Billiard Accessories—Namely, Cue Balls, Cue Sticks, and Cue Stick Racks (Int. Cl. 28).
First use September 1966.

SN 292,863. Harriette Wright Rogers, Jackson, Miss. Filed Mar. 11, 1968.

MYSTIC DIALS

The term "Dials" is disclaimed apart from the mark as shown.
For Equipment for Playing an Indoor Board Game (Int. Cl. 28).
First use Dec. 24, 1967.

SN 293,429. Angelo A. Bullara, d.b.a. Bullara Enterprises Co., Los Angeles, Calif. Filed Mar. 18, 1968.

FISH FOR IT

For Equipment Sold as a Unit for Playing a Card Game and Comprising Master Cards Each Depicting a Plurality of Fishes, and Playing Cards Individually Depicting One of the Fish on a Master Card (Int. Cl. 28).
First use Mar. 12, 1968.

SN 294,791. Wham-O Mfg. Co., San Gabriel, Calif. Filed Apr. 3, 1968.

BITTY-BLANKS

For Printed Plastic Sheets Containing Various Illustrative Designs for Children's Use as Toys and Other Items of Amusement (Int. Cl. 28).
First use Feb. 26, 1968.

SN 297,341. Merry Manufacturing Company, Cincinnati, Ohio. Filed May 6, 1968.

MERRY

Owner of Reg. Nos. 531,528, 659,541, and others.
For Toy Kits for Children—Namely, Manicure Sets, Make-Up Sets, Shampoo Sets, Bath Sets, Beauty Shop Sets, Facial Sets, Shoe Shine Sets, Shaving Sets, Cleaning Sets, Diaper Sets, Laundry Closet Sets, Linen Closet Sets, Cookie Decorator Sets, First Aid Sets, Ice Cream Shop Sets, Infants' Shop Sets, Bank Sets, Bubble Horns, Jewelry Sets, Comb, Brush and Mirror Sets, Purses, Cameras, and Watches (Int. Cl. 28).
First use June 9, 1949, as to manicure sets.

SN 298,891. ABC Industries, Inc., Milwaukee, Wis. Filed May 23, 1968.

vent-air IT BREATHES

The words "It Breathes" are disclaimed apart from the mark as shown.
For Head Covers for Golf Clubs (Int. Cl. 28).
First use Aug. 1, 1951.

SN 299,407. Eldon Industries, Inc., Hawthorne, Calif. Filed May 31, 1968.

DYNA MITE

For Motors for Toy Cars (Int. Cl. 28).
First use May 10, 1968.

Class 23—Cutlery, Machinery, and Tools, and Parts Thereof

SN 250,519. Rotobond, Inc., Northbrook, Ill. Filed July 18, 1966.

ROTOBOND

For Laminating Machines and Parts Thereof (Int. Cl. 7).
First use Feb. 12, 1957.

SN 253,856. Dial Products, Inc., Phoenix, Ariz. Filed Sept. 6, 1966.

Dial

For Electric Water Pumps (Int. Cl. 7).
First use Feb. 1, 1964.

SN 259,618. Missouri-Rogers Corporation, Joplin, Mo. Filed Nov. 25, 1966.

Missouri Rogers

For Quarry Equipment—Namely, Apron Feeders (Int. Cl. 7).
First use Jan. 29, 1963.

SN 261,305. Joh. Kleinewefers Söhne, Krefeld, Germany. Filed Dec. 22, 1966.

Calandrette

For Machines for Making Plates, Belts, and Foils of Synthetic Material, Especially in Endless Condition, and Parts Thereof (Int. Cl. 7).
First use Dec. 20, 1961; in commerce July 20, 1965.

SN 263,191. Midland Manufacturing Company, Inc., Memphis, Tenn. Filed Jan. 24, 1967.

BE
ASHLAND LINE

For Land Forming Equipment—Namely, Scrapers and Land Planes (Int. Cl. 7).
First use June 1961; 1959 as to "Ashland BE Line" without design.

SN 264,621. Utica Cutlery Company, Utica, N.Y. Filed Feb. 13, 1967.

COOK-EASE

For Kitchen Tools—Namely, Forks, Spoons, Turners, Spatulas, Servers, and Tongs (Int. Cl. 8).
First use Dec. 19, 1966.

SN 264,684. Rockland, Inc., Winter Garden, Fla. Filed Feb. 14, 1967.

ROCKLAND

Owner of Reg. No. 634,549.
For Attachments for Construction Equipment—Namely, Blades, Buckets, Lift Forks, Grapples, Loaders, Stump Removers, Canopies, Windrow Eliminators, and Clearing Chains (Int. Cl. 7).
First use at least as early as Mar. 1, 1952.

SN 267,463. White Sewing Machine Company, Cleveland, Ohio. Filed Mar. 23, 1967.

STAR DELUXE

Applicant disclaims the right to exclusive use of the word "Deluxe" apart from the mark as shown. Owner of Reg. No. 720,298.
For Sewing Machines and Parts Therefor (Int. Cl. 7).
First use at least as early as June 15, 1966.

SN 267,570. Wyandotte Chemicals Corporation, Wyandotte, Mich. Filed Mar. 24, 1967.

TOPPER CUB

Owner of Reg. No. 788,458.
For Pump, Particularly of the Diaphragm Type, Especially Adapted To Circulate Liquids for Industrial Operations Such as in Food Processing and Chemical Plants (Int. Cl. 7).
First use Jan. 24, 1967.

SN 269,785. Pioneer Centrifuging Company, Houston, Tex. Filed Apr. 21, 1967.

SILTMASTER

For Centrifugal Separators (Int. Cl. 7).
First use Aug. 1, 1964.

SN 269,786. Pioneer Centrifuging Company, Houston, Tex. Filed Apr. 21, 1967.

SANDMASTER

For Centrifugal Separators (Int. Cl. 7).
First use Aug. 1, 1964.

SN 269,788. Pioneer Centrifuging Company, Houston, Tex. Filed Apr. 21, 1967.

For Centrifugal Separators (Int. Cl. 7).
First use Aug. 1, 1964.

SN 270,168. B. Thies, Inhaber B. Thies & Söhne, Coesfeld, Westphalia, Germany. Filed Apr. 27, 1967.

combi-bloc

Owner of German Reg. No. 826,928, dated Dec. 5, 1966.
For Dyeing Apparatus for Textiles (Int. Cl. 7).

SN 276,054. United Engineering Manufacturing Company, Covina, Calif. Filed July 14, 1967.

UNILOY

For Replaceable Brooms, and Parts Thereof, for Mounting on Power Operated Street Sweeping Machines (Int. Cl. 7).
First use January 1961.

SN 279,007. Sioux Steam Cleaner Corporation, Beresford, S. Dak. Filed Aug. 24, 1967.

SIOUX

For Portable, Multi-Purpose Steam Cleaners and High Pressure Washers (Int. Cl. 7).
First use Jan. 1, 1966; 1939 in another form.

SN 279,111. Sta-Rite Industries, Inc., Delavan, Wis. Filed Aug. 25, 1967.

For Centrifugal, Rotary and Reciprocating Pumps; Water Supply Systems, Swimming Pool Filtration Systems, and Water Softening Systems, Comprising Pumps, Motors, Tanks, Filters and Connections; and Parts Thereof (Int. Cl. 11).
First use Jan. 25, 1967.

SN 279,400. Lempco Industries, Inc., Bedford, Ohio, assignee of Lempco Products, Inc., Bedford, Ohio. Filed Aug. 30, 1967.

WORLDWIDE

For Gears for Vehicle Transmissions (Int. Cl. 12).
First use July 24, 1967.

SN 280,302. Crowell Designs, Inc., Point Pleasant, N.J. Filed Sept. 14, 1967.

BILGE KING

Without waiving any of its common law rights, applicant disclaims the word "Bilge" apart from the mark as shown.
For Submersible Bilge Pumps (Int. Cl. 7).
First use Apr. 10, 1967.

SN 282,587. Hydra-Tool Company, Inc., Topeka, Kans. Filed Oct. 16, 1967.

HTC

The drawing is lined for the color orange.
For Metal Working Machinery—Namely, Shears and Press Brakes (Int. Cl. 7).
First use in or about December 1966.

SN 285,193. E. W. Bliss Company, Pittsburgh, Pa. Filed Nov. 20, 1967.

MACK-HEMP

Owner of Reg. Nos. 661,622, 775,635, and others.
For Tube Straightening Machines (Int. Cl. 7).
First use at least as early as April 1956.

SN 286,104. Day/Ton Progress Corp., Dayton, Ohio. Filed Dec. 4, 1967.

TOOLIGN

For Die Sets (Int. Cl. 8).
First use May 11, 1967.

SN 287,035. MacMillin Hydraulic Engineering Corporation, Skokie, Ill. Filed Dec. 15, 1967.

MacMILLIN

For Hydraulic Power and Control Units (Int. Cl. 7).
First use as early as October 1956.

SN 287,304. Lincoln Manufacturing Co., Inc., Fort Wayne, Ind. Filed Dec. 20, 1967.

AUTOVATION

Owner of Reg. No. 830,541.
For Cafeteria-Type Elevator for Raising Dishes, Cups, Glasses, and the Like (Int. Cl. 7).
First use Sept. 8, 1966.

SN 287,373. Multi-Clean Products, Incorporated, St. Paul, Minn. Filed Dec. 21, 1967.

Karpet Kween

The word "Karpet" is disclaimed apart from the mark as a whole.
For Electric Vacuum Cleaners for Industrial and Commercial Applications (Int. Cl. 7).
First use Aug. 22, 1967.

SN 287,422. The Cotton Silk and Man-Made Fibres Research Association, Didsbury, Manchester, England. Filed Dec. 22, 1967.

SHIRLEY

Owner of British Reg. No. 738,357, dated Jan. 20, 1955.
For Textile Machines, and Parts Thereof (Int. Cl. 7).

SN 288,831. Lockwood Technical, Inc., Sand City, Calif. Filed Jan. 15, 1968.

SPOTWHEEL

For Roller Applicators for Hot Melt Adhesive and the Like (Int. Cl. 8).
First use on or about June 28, 1967.

SN 297,330. John Oster Manufacturing Co., Milwaukee, Wis. Filed May 10, 1968.

OSTER

Owner of Reg. Nos. 515,517, 834,711, and 835,917.
For Electric Shavers, Hand Operated Hair Clippers for Human, Animal and Industrial Uses, Portable Electric Hair Clippers for Human, Animal and Industrial Uses, Clipper Blades, Ice Crushers, Knife and Scissors Sharpeners, Scissors, Electric Can Openers, Electric Sausage Stuffers, Electric Juice Extractors, Electric Coffee Mills, and Parts Thereof (Int. Cls. 7 and 8).
First use approximately 1924.

SN 298,294. SKF Industries, Inc., Philadelphia, Pa. Filed May 16, 1968.

SKF

Owner of Reg. Nos. 502,839 and 502,840.
For Adjustable Bearing Assembly for Supporting and Guiding Shafts or Other Elongated Machine Members for Longitudinal, Translational or Reciprocatory Motion (Int. Cl. 7).
First use Sept. 28, 1967.

SN 298,386. J. K. Smit & Sons, Inc., Murray Hill, N.J. Filed May 17, 1968.

SMITITE

For Diamond Dressing Tools (Int. Cl. 7).
First use in 1942.

Class 26—Measuring and Scientific Appliances

SN 247,938. Albert Lins, Kusnacht, Zurich, Switzerland. Filed June 13, 1966.

Owner of Swiss Reg. No. 187,094, dated July 4, 1961.
For Central Heating Equipment and Heating Control Apparatus—Namely, Automatic Controllers for Controlling Temperature, Pressure, Liquid Level, Rate of Flow, and Like Variables (Int. Cl. 9).

SN 249,938. Bausch & Lomb Incorporated, Rochester, N.Y. Filed July 11, 1966.

SPECTROPHOR

For Laboratory Analytical Instruments, Comprising Electrophoresis Equipment for Direct Light Absorption Detection of Electrophoretically Separated Substances (Int. Cl. 9).
First use Feb. 19, 1965.

SN 255,075. Edgcumbe Peebles Limited, London, England. Filed Sept. 26, 1966.

METROHM

Owner of British Reg. No. 423,556, dated Feb. 18, 1922.
For Resistance Measuring Instruments, Continuity Testers, Insulation Testers, Line Connection Testers, Impedance Measuring Instruments, Wheatstone Bridge Apparatus, and Carrying Cases for These Instruments (Int. Cl. 9).
First use at least Apr. 16, 1914; in commerce May 1922.

SN 260,005. American Machine & Foundry Company, New York, N.Y. Filed Dec. 5, 1966.

ORBIS

For Electrical and Electronic Ordering, Billing, and Inventory Computers (Int. Cl. 9).
First use May 25, 1964.

SN 268,188. Humphrey, Inc., San Diego, Calif. Filed Apr. 3, 1967.

NORTH SEEKER

No claim is made to the word "North" apart from the mark as shown.
For North Azimuth Indicator System Apparatus (Int. Cl. 9).
First use March 1967.

SN 269,359. Solidstate Controls, Inc., Columbus, Ohio. Filed Apr. 17, 1967.

SCI

The drawing is lined for gray, but no claim is made to color as a feature of the mark.
For Electrical and Electronic Controls, Systems and Components Such as Inverters, Converters, Transformers, Saturable Transformers, Reactors, Rectifiers, Current Regulators, Chargers, and Stand-By Power Systems (Int. Cl. 9).
First use Oct. 4, 1962.

SN 270,242. Grad-Line, Inc., Woodinville, Wash. Filed Apr. 28, 1967.

GRAD-LINE

Owner of Reg. No. 827,003.
For Position Sensing and Control Equipment for Automatically Adjusting the Blade or Screed on Concrete or Asphalt Paving and Finishing Equipment, Rock Spreaders, Graders, Ditchers, and Related Equipment (Int. Cl. 9).
First use May 15, 1962.

SN 272,000. Ametek, Inc., New York, N.Y. Filed May 22, 1967.

CLEANOMETER

For Surface Contaminant Detector (Int. Cl. 9).
First use May 1964.

SN 272,514. Motomco, Inc., Clark, N.J. Filed May 26, 1967.

FLŌSIG

For Automatic Flow Rate Signal Meter for Fluid Lines for Recording Air Pressure Used as a Power Source for Tools (Int. Cl. 9).
First use at least as early as 1915.

SN 272,920. Control Data Corporation, Minneapolis, Minn. Filed June 2, 1967.

DIGIGRAPHIC

For Computer Input and Display Equipment Comprising a Cathode Ray Display Tube, Light Pen, and Electronic Keyboard, for Operator Communications With a Computer (Int. Cl. 9).
First use Mar. 7, 1963.

SN 274,094. Samuelson Film Service Limited, London, England. Filed June 16, 1967.

SAMCINE

Owner of British Reg. No. B887,499, dated Nov. 26, 1965.
For Cinematographic Apparatus and Instruments—Namely, Supports and Accessories for Cinematograph Cameras, Anti-Vibration Mountings, Stabilized Platforms, Batteries and Power Units, Battery Chargers, TV Viewfinder Systems for Cinematograph Cameras, Accessories for Sound Recording and Reproduction Equipment, Editing Equipment and Accessories, Specialized Vehicles for Cinematographic Reproduction, and Helicopter Mountings for Cinematograph Cameras (Int. Cl. 9).

SN 279,588. Victory Engineering Corporation, Springfield, N.J. Filed Sept. 1, 1967.

Å THINISTOR

For Semi-Conductor Electronic Components—Namely, Thermistors and Varistors (Int. Cl. 9).
First use Aug. 1, 1967.

SN 282,440. Collins Microflat Company, Inc., Hawthorne, Calif. Filed Oct. 13, 1967.

UNIVERSAL-CHEK

For Granite Dial Comparator (Int. Cl. 9).
First use Aug. 11, 1967.

SN 285,720. Calma Company, Santa Clara, Calif. Filed Nov. 28, 1967.

VIP

For Graphical Data Digitizers (Int. Cl. 9).
First use on or before Jan. 30, 1967.

SN 286,129. Claud S. Gordon Company, Richmond, Ill. Filed Dec. 4, 1967.

XACTAPE

Owner of Reg. Nos. 423,567, 811,285, and others.
For Resistance Temperature Sensors and Thermometers (Int. Cl. 9).
First use on or about June 27, 1967.

SN 286,297. Zylo Ware Corporation, Long Island City, N.Y. Filed Dec. 5, 1967.

ZYLOWARE

Owner of Reg. No. 849,036.
For Eyeglasses, Eyeglass Frames, Sunglasses, and Sunglass Frames (Int. Cl. 9).
First use 1923.

SN 287,314. Richard E. Oswald, d.b.a. Reotemp Instrument Company, Van Nuys, Calif. Filed Dec. 20, 1967.

For Bi-Metallic Dial Thermometers (Int. Cl. 9).
First use on or before Sept. 1, 1965.

SN 287,315. Richard E. Oswald, d.b.a. Reotemp Instrument Company, Van Nuys, Calif. Filed Dec. 20, 1967.

REOTEMP

For Bi-Metallic Dial Thermometers (Int. Cl. 9).
First use on or before Sept. 1, 1965.

SN 287,362. Honeywell Inc., Minneapolis, Minn. Filed Dec. 21, 1967.

TRI-FILMATIC

Owner of Reg. No. 803,087.
For Motion Picture Cameras (Int. Cl. 9).
First use at least as early as February 1966.

SN 287,363. Honeywell Inc., Minneapolis, Minn. Filed Dec. 21, 1967.

DUAL-FILMATIC

Owner of Reg. No. 803,087.
For Motion Picture Cameras (Int. Cl. 9).
First use at least as early as Apr. 22, 1966.

SN 287,580. Precision Acoustics Corporation, New York, N.Y. Filed Dec. 26, 1967.

interacoustics

For Electric Audiologic Instruments—Namely, Auditory Amplifiers, Device for Visual and Tactile Indication of Pitch and Visual Indication S-Sounds for Training in Articulation, Apparatus for Transposing Speech Frequencies Into Low Frequency Range, Apparatus for Tactile Speech Transmission by Vibrators Connected to a Filter System, Visible Speech Apparatus for Articulation Training of the Totally Deaf, Audiometer for Indication of Hearing Loss, Speech Unit for Speech Audiometry and Audiometer Earphones (Int. Cl. 9).
First use May 1967.

SN 287,743. Keuffel & Esser Company, Hoboken, N.J. Filed Dec. 28, 1967.

ANALON

For Slide Rules (Int. Cl. 9).
First use Sept. 12, 1966.

Class 27—Horological Instruments

SN 276,489. Westminster Watch Co., Inc., New York, N.Y. Filed July 20, 1967.

WESTMINSTER

For Watches (Int. Cl. 14).
First use Feb. 15, 1962.

SN 289,419. Palmer Sales Corporation, New York, N.Y. Filed Jan. 23, 1968.

JACQUES MONNAT

"Jacques Monnat" is a fictitious name.
For Watches (Int. Cl. 14).
First use Sept. 13, 1967.

SN 289,598. Matsushita Electric Industrial Co., Ltd., Kadoma-shi, Osaka Prefecture, Japan. Filed Jan. 25, 1968.

PANASONIC

Owner of Japanese Reg. No. 753,377, dated Aug. 31, 1967; and U.S. Reg. Nos. 800,220 and 800,942.
For Electric Clocks (Int. Cl. 14).

SN 289,710. Moskovitz & Gluck, Inc., New York, N.Y. Filed Jan. 26, 1968.

ANDES

For Watches (Int. Cl. 14).
First use July 1, 1967.

SN 289,771. Bulova Watch Company, Inc., Flushing, N.Y. Filed Jan. 29, 1968.

AMERICAN STANDARD

Owner of Reg. Nos. 235,456, 691,993, and others.
For Watches and Parts Thereof (Int. Cl. 14).
First use Aug. 1, 1918.

Class 28 — Jewelry and Precious-Metal Ware

SN 273,749. Julia Lee Drake, High Point, N.C. Filed June 13, 1967.

BEER BOBS

Applicant disclaims the term "Bobs" apart from the mark as shown.
For Earrings (Int. Cl. 14).
First use June 9, 1967.

SN 288,985. Textron Inc., Providence, R.I. Filed Jan. 16, 1968.

QUEEN OF DIAMONDS

Owner of Reg. No. 439,972.
For Expansion Bracelets, Including Watch Bracelets (Int. Cl. 14).
First use Jan. 4, 1966.

SN 289,039. Barry A. Squires, Oakland, Calif. Filed Jan. 17, 1968.

GLOMP

For Costume Jewelry and Cartoon Jewelry (Int. Cl. 14).
First use Aug. 7, 1967.

SN 289,133. Lou Shved Corporation, New York, N.Y. Filed Jan. 18, 1968.

LSc

For Jewelry (Int. Cl. 14).
First use Aug. 1, 1967.

SN 289,262. Blazon, Inc., Kansas City, Mo. Filed Jan. 22, 1968.

For Jewelry (Int. Cl. 14).
First use June 8, 1967.

SN 297,506. Lasko Strap Company, Inc., New York, N.Y. Filed May 7, 1968.

PADETTE

Owner of Reg. Nos. 500,903, 635,559, and others.
For Wrist Watch Straps (Int. Cl. 14).
First use Jan. 8, 1947.

Class 29 — Brooms, Brushes, and Dusters

SN 288,964. Mason Pearson Brothers, London, England. Filed Jan. 16, 1968.

MASON PEARSON

"Mason Pearson" is the name of the founder of applicant firm, now deceased.
For Hair Brushes and Brushes for Cleaning Hair Brushes (Int. Cl. 21).
First use Dec. 30, 1960; in commerce Dec. 30, 1960.

Class 30 — Crockery, Earthenware, and Porcelain

SN 284,833. Paragon China Limited, Longton, Stoke-on-Trent, England. Filed Nov. 14, 1967.

PARAGON

For China Dinnerware and China Tableware (Int. Cl. 21).
First use Nov. 20, 1901; in commerce Dec. 31, 1923.

Class 31 — Filters and Refrigerators

SN 288,830. King Refrigerator Corporation, Glendale, N.Y. Filed Jan. 15, 1968.

REX

For Household Refrigerators and Parts Thereof (Int. Cl. 11.)
First use Dec. 18, 1967.

SN 288,857. Research Products Corporation, Madison, Wis. Filed Jan. 15, 1968.

WEB-LOK

For Frames for Air Filters (Int. Cl. 11).
First use Nov. 29, 1967.

Class 32 — Furniture and Upholstery

SN 270,386. Jencraft Mfg. Co., New York, N.Y. Filed May 1, 1967.

Decorweave

For Roll-Up Blinds (Int. Cl. 20).
First use on or about Jan. 25, 1967.

SN 270,388. Jencraft Mfg. Co., New York, N.Y. Filed May 1, 1967.

GIBRALTAR

For Porch Blinds (Int. Cl. 20).
First use on or about Jan. 25, 1967.

SN 276,336. Metropolitan Wire Goods Corporation, Wilkes-Barre, Pa. Filed July 19, 1967.

METRO WIRE

Applicant disclaims the word "Wire," separate and apart from the mark.
For Shelving Units for Industrial and Home Use (Int. Cl. 20).
First use in or about January 1958.

SN 287,559. Kenlea Crafts, Inc., Richmond, Va. Filed Dec. 26, 1967.

OXFORD HOUSE

For Bedroom, Dining Room, and Occasional Furniture (Int. Cl. 20).
First use January 1965.

Class 33 — Glassware

SN 266,165. Geo. Zoltan Lefton Co., Chicago, Ill. Filed Mar. 7, 1967.

Lefton

Owner of Reg. No. 643,047.
For Fancy Glassware—Namely, Vases and Tableware (Int. Cl. 21).
First use 1958.

Class 34 — Heating, Lighting, and Ventilating Apparatus

SN 252,251. Durox Equipment Company, Cleveland, Ohio. Filed Aug. 12, 1966.

WE "CARE" FOR RAILROADS

Applicant disclaims the word "Railroads" apart from the mark as shown.
For Railroad Equipment—Namely, Radiators, Oil Coolers, Cab Heaters, Intercoolers, Pre-Heaters, Shell and Tube Type Heat Exchangers, and Parts and Components Therefor (Int. Cl. 11).
First use Nov. 1, 1964.

SN 259,124. Lear Siegler, Inc., Santa Monica, Calif. Filed Nov. 21, 1966.

HYDRO-SQUEEGEE

For Solder Fusing and Leveling Machine (Int. Cl. 7).
First use December 1965.

SN 287,127. The Air Preheater Company, Inc., Wellsville, N.Y. Filed Dec. 18, 1967.

HOWDEN-APCO

For Industrial Fans and Blowers (Int. Cl. 11).
First use at least as early as July 16, 1964.

SN 287,272. Broan Mfg. Co., Inc., Hartford, Wis. Filed Dec. 20, 1967.

COLONY HOUSE

For Range Hoods (Int. Cl. 11).
First use Nov. 29, 1967.

SN 287,655. Lindberg Corporation, Chicago, Ill. Filed Dec. 27, 1967.

Owner of Reg. No. 757,058.
For Industrial Heat Treating Furnaces (Int. Cl. 11).
First use Jan. 14, 1966.

SN 287,680. Sunbeam Corporation, Chicago, Ill. Filed Dec. 27, 1967.

MALIBU

For Humidifiers and Parts Therefor (Int. Cl. 11).
First use Nov. 1, 1967.

Class 35 — Belting, Hose, Machinery Packing, and Nonmetallic Tires

SN 214,636. Fre-Mar Industries, Inc., East Butler, Pa. Filed Mar. 22, 1965.

The drawing is lined for silver and red. The mark consists of a representation of a container for the goods.
For Repair Products for Use in Repairing Tires and Other Pneumatic Pressure Containing Devices (Int. Cl. 12).
First use on or about June 15, 1961.

SN 277,542. C. E. Conover & Co., Inc., Fairfield, N.J. Filed Aug. 4, 1967.

For Scraper Rings for Sealing and Wiping Rods, Piston Seals, Piston Rings, Rod Seals, Rotary Seals, Static Seals, Reciprocating Seals and Oscillating Seals; All Made of Plastic and/or Elastomeric Material (Int. Cls. 7 and 17).
First use January 1967.

SN 288,305. The Goodyear Tire & Rubber Company, Akron, Ohio. Filed Jan. 8, 1968.

G800

For Tires (Int. Cl. 12).
First use Sept. 28, 1967.

SN 288,306. The Goodyear Tire & Rubber Company, Akron, Ohio. Filed Jan. 8, 1968.

HI-MILER T/T

For Tires (Int. Cl. 12).
First use Nov. 29, 1967.

SN 288,808. The General Tire & Rubber Company, Akron, Ohio. Filed Jan. 15, 1968.

DUAL S-90

For Tires (Int. Cl. 12).
First use December 1967.

SN 290,410. Pow-R-Tow, Inc., Hewlett, N.Y. Filed Feb. 6, 1968.

POW-R-TOW

For Drive Belts (Int. Cl. 7).
First use Sept. 25, 1967.

SN 295,989. Wilbanks Rubber Company, Inc., Montgomery, Ala. Filed Apr. 18, 1968.

EXSEL

For Vehicle Tires, Tubes, and Tread Rubber (Int. Cls. 12 and 17).
First use Mar. 12, 1968.

Class 36 — Musical Instruments and Supplies

SN 263,227. Federico Riojas, Mexico City, Mexico. Filed Jan. 17, 1967.

CORITO

The word "Corito" in Spanish means "a person who treads grapes in the wine press."
For Phonograph Records and Pre-Recorded Magnetic Tapes (Int. Cl. 9).
First use Mar. 10, 1964; in commerce Nov. 5, 1965.

SN 263,560. General Music Strings Limited, Pontypridd, Wales. Filed Jan. 30, 1967.

RED DRAGON

For Strings for Musical Instruments (Int. Cl. 15).
First use March 1963; in commerce April 1963.

SN 265,428. Roy J. Maier Corporation, Sun Valley, Calif. Filed Feb. 24, 1967.

NOVAPAK

For Musical Reeds (Int. Cl. 15).
First use June 14, 1966.

SN 268,319. Mellotronics Limited, London, England. Filed Apr. 4, 1967.

MELLOTRON

Owner of British Reg. No. 876,271, dated Feb. 26, 1965.
For Magnetic Tape Reproducers and Sound Reproducing System With a Conventional Keyboard in Which Musical Tones and Rhythm Effects Are Produced From Individual Lengths of Prerecorded Magnetic Tapes (Int. Cl. 9).

SN 271,489. Liberty Records, Inc., Los Angeles, Calif. Filed May 15, 1967.

SOUL CITY

For Phonograph Records and Albums Thereof, and Pre-Recorded Tapes (Int. Cl. 9).
First use July 22, 1966.

SN 272,819. Empire Scientific Corporation, Garden City, N.Y. Filed June 1, 1967.

EMPIRE

For Phonograph Pickup Cartridges, Replacement Stylii for Such Cartridges, Phonograph Tone Arms, and Phonograph Turntables (Int. Cl. 9).
First use August 1959.

SN 276,306. C. Bruno & Son, Incorporated, New York, N.Y. Filed July 19, 1967.

TRUMP

For Guitars and Other Fretted Instruments, and Drums and Other Percussion Instruments (Int. Cl. 15).
First use April 1967.

SN 278,317. Schafer Electronics, Chatsworth, Calif. Filed Aug. 15, 1967.

VLR

For Tape Recorder-Reproducers (Int. Cl. 9).
First use on or about May 15, 1967.

SN 279,014. White Whale Record Co., Inc., Los Angeles, Calif. Filed Aug. 24, 1967.

WHITE WHALE

For Phonograph Records (Int. Cl. 9).
First use June 17, 1965.

SN 280,765. Vincent Chiarelli, d.b.a. Vincent Record Company, Rockford, Ill. Filed Sept. 20, 1967.

VINCENT

For Phonograph Records (Int. Cl. 9).
First use July 15, 1967.

SN 281,043. Dellwood Music Co., Inc., d.b.a. Dellwood Records, Saddle Brook, N.J. Filed Sept. 25, 1967.

DELLWOOD

For Phonograph Records and Magnetic Tape (Int. Cl. 9).
First use July 1, 1965.

SN 289,029. Leo Orso, d.b.a. Orsonic Recording Services, Washington, D.C. Filed Jan. 17, 1968.

ORSONIC

For Phonograph Records and Pre-Recorded Magnetic Tapes (Int. Cl. 9).
First use January 1961.

SN 290,413. Spoken Arts, Inc., New Rochelle, N.Y. Filed Feb. 6, 1968.

SPOKEN sa ARTS

For Mechanically Grooved Phonograph Records (Int. Cl. 9).
First use Apr. 23, 1956.

SN 291,333. The Spoken Class, Inc., New York, N.Y. Filed Feb. 19, 1968.

THE SPOKEN CLASS

For Phonograph Record Albums (Int. Cl. 9).
First use December 1967.

Class 37 — Paper and Stationery

SN 239,718. Calgon Corporation (Delaware corporation), Pittsburgh, Pa., assignee of Calgon Corporation (Pennsylvania corporation), Pittsburgh, Pa. Filed Feb. 28, 1966.

BIO-CHEK 60

Owner of Reg. No. 808,741.
For Ingredient of Paper Rendering It Antibacterial (Int. Cl. 5).
First use at least as early as January 1964.

SN 269,989. Hammermill Paper Company, Strathmore Paper Company Division, West Springfield, Mass. Filed Apr. 25, 1967.

For Writing, Typing, Drawing, and Printing Papers (Int. Cl. 16).
First use Feb. 3, 1967.

SN 279,862. Sales Tools, Inc., Chicago, Ill. Filed Sept. 7, 1967.

For Loose Leaf Binders (Int. Cl. 16).
First use March 1947.

SN 283,247. Georgia-Pacific Corporation, Portland, Oreg. Filed Oct. 24, 1967.

ROTUNDA

For Printing Paper (Int. Cl. 16).
First use Nov. 21, 1966.

SN 284,435. American Greetings Corp., Cleveland, Ohio. Filed Nov. 9, 1967.

FASHION MAGIC

For Gift Wrap Paper (Int. Cl. 16).
First use at least as early as January 1963.

SN 284,990. Capitol Brush Co., d.b.a. Enterprise Wallcoverings, Compton, Calif. Filed Nov. 16, 1967.

EASY-DIP

For Pre-Pasted Wallpaper (Int. Cl. 27).
First use Oct. 30, 1967.

SN 288,868. The Sangamon Company, Taylorville, Ill. Filed Jan. 15, 1968.

SEAL-A-MATIC

For Envelopes (Int. Cl. 16).
First use Dec. 8, 1967.

SN 289,885. Eberhard Faber Inc., Wilkes-Barre, Pa. Filed Jan. 30, 1968.

PlastiRace

For Erasers (Int. Cl. 16).
First use Jan. 8, 1968.

SN 290,166. Georgia-Pacific Corporation, Portland, Oreg. Filed Feb. 2, 1968.

HOPPER
GO→PAC

Owner of Reg. Nos. 652,065, 739,021, and 812,552.
For Printing Paper Packaged in Multiple Unit Cartons (Int. Cl. 16).
First use Apr. 20, 1967.

SN 290,314. Nationwide Papers Incorporated, Knightsbridge, Hamilton, Ohio. Filed Feb. 5, 1968.

CAMERATA XII

For Printing Papers, Including Uncoated Text and Cover Papers (Int. Cl. 16).
First use Nov. 2, 1967.

SN 291,137. Concel Inc., d.b.a. Orchids Products, New York, N.Y. Filed Feb. 15, 1968.

MINI-NAP

For Paper Napkins (Int. Cl. 16).
First use Jan. 26, 1968.
Subj. to Intf. with SN 295,133.

SN 293,080. Fox River Paper Corporation, Appleton, Wis. Filed Mar. 13, 1968.

MODAVATION PAPETERIES

Applicant disclaims "Papeteries" apart from the mark as used.
For Writing Paper (Int. Cl. 16).
First use Feb. 26, 1968.

SN 294,816. Consolidated Packaging Corporation, Chicago, Ill. Filed Apr. 3, 1968.

CONSO·COLOR

For Linerboard and Box-Board With Color Added at the Time of Manufacture, and Corrugated Sheets Having One or More Surfaces of Colored Linerboard (Int. Cl. 16).
First use Mar. 14, 1968.

SN 295,133. Fort Howard Paper Company, Green Bay, Wis. Filed Apr. 8, 1968.

MINI-MORNAP

Owner of Reg. No. 369,291.
For Paper Napkins (Int. Cl. 16).
First use Feb. 10, 1968.
Subj. to Intf. with SN 291,137.

Class 38 — Prints and Publications

SN 262,423. C. Henderson & Associates, Inc., New York, N.Y. Filed Jan. 12, 1967.

COOKBOX

For Printed Recipes in Form of File Cards, To Be Sold in File Boxes, or for Insertion in File Boxes (Int. Cl. 16).
First use Jan. 9, 1967.

SN 267,156. Imperial Chemical Industries Limited, Millbank, London, England. Filed Mar. 20, 1967.

ICI

Owner of Reg. No. 653,483.
For Magazines, Periodical Scientific Publications, Technical Pamphlets, Brochures and Information Leaflets (Int. Cl. 16).
First use in or about January 1928; in commerce in or about 1928.

SN 267,157. Imperial Chemical Industries Limited, Millbank, London, England. Filed Mar. 20, 1967.

ICI

Owner of Reg. No. 654,483.
For Magazines, Periodical Scientific Publications, Technical Pamphlets, Brochures and Information Leaflets (Int. Cl. 16).
First use in or about March 1948; in commerce March 1948.

SN 269,615. American Heritage Publishing Co., Inc., New York, N.Y. Filed Apr. 20, 1967.

THE MAGAZINE OF HISTORY

For Magazine (Int. Cl. 16).
First use during December 1954.

SN 270,637. Xerox Corporation, Rochester, N.Y. Filed May 3, 1967.

AEP PAPERBACK PROGRAMS

Applicant disclaims the words "Paperback Programs" apart from the mark as shown.
For Paperback Books (Int. Cl. 16).
First use on or before Sept. 29, 1966.

SN 272,378. The Granet Corp., Framingham, Mass. Filed May 25, 1967.

Applicant disclaims the words "Work Safely" apart from the mark as shown. The drawing is lined for a bright reddish-orange color. Owner of Reg. No. 841,264.
For Printed Educational Material Concerning Hand Safety (Int. Cl. 16).
First use in or about May 1966.

SN 273,729. American Heritage Publishing Co., Inc., New York, N.Y. Filed June 13, 1967.

A MAGAZINE OF THE ARTS

For Magazine (Int. Cl. 16).
First use during September 1958.

SN 273,730. American Heritage Publishing Co., Inc., New York, N.Y. Filed June 13, 1967.

For Magazine and Books (Int. Cl. 16).
First use during September 1958.

SN 274,334. Mills Music, Inc., New York, N.Y. Filed June 20, 1967.

Tech/Tronics

For Music Portfolios Containing Printed Sheets of Music (Int. Cl. 16).
First use May 10, 1967.

SN 275,374. Joe R. Herring, d.b.a. Herring Printing Co., Kerrville, Tex. Filed July 5, 1967.

ATTENDANCE BUILDERS

For Printed Cards in the Nature of Greeting Cards (Int. Cl. 16).
First use Apr. 1, 1967.

SN 275,717. Xerox Corporation, Rochester, N.Y. Filed July 10, 1967.

MY WEEKLY READER Summer Surprise

Owner of Reg. Nos. 254,284 and 699,849.
For Newspaper-Type Publication for Children of School Age (Int. Cl. 16).
First use June 5, 1967.

SN 277,386. Artemis Verlags Aktiengesellschaft, Zurich, Switzerland. Filed Aug. 2, 1967.

For Books (Int. Cl. 16).
First use at least as early as July 1, 1966; in commerce at least as early as July 1, 1966.

SN 278,435. The Henry F. Henrichs Publications, Inc., Litchfield, Ill. Filed Aug. 16, 1967.

Sunshine

For Magazine (Int. Cl. 16).
First use Jan. 1, 1924.

SN 278,753. V.I.P. Corporation, Memphis, Tenn. Filed Aug. 21, 1967.

V.i.P.

For Materials for Gift Wrapping and Gift Packaging—Namely, Adhesive Decorative Seals (Int. Cl. 16).
First use Aug. 15, 1967.

SN 278,754. V.I.P. Corporation, Memphis, Tenn. Filed Aug. 21, 1967.

V.i.P.

For Materials for Gift Wrapping and Gift Packaging—Namely, Adhesive Decorative Seals (Int. Cl. 16).
First use Aug. 15, 1967.

SN 278,966. Independent Research and Publishing Association, Incorporated, Miami, Fla. Filed Aug. 24, 1967.

INSIGHT ON THE NEWS

For Periodical News Magazine (Int. Cl. 16).
First use July 1967.

SN 279,408. Martin Marietta Corporation, New York, N.Y. Filed Aug. 30, 1967.

BEC'N CALL

For Collection of Color Charts in Booklet Form (Int. Cl. 16).
First use May 10, 1967.

SN 279,739. Marjorie D. Ingalls, d.b.a. Tourmap Company, Seattle, Wash. Filed Sept. 6, 1967.

TOURMAP

For Municipal Area Maps With Artistic Overlay Emphasizing Certain Business Establishments and Other Points of Interest (Int. Cl. 16).
First use on or about July 1, 1964.

SN 280,088. The Nutrition Foundation, Inc., New York, N.Y. Filed Sept. 11, 1967.

NF

For Booklets, Reports, and a Monthly Review of Information and Research in the Field of Proper Nutrition (Int. Cl. 16).
First use on or about July 21, 1966.

SN 281,207. Maco Publishing Co., Inc., New York, N.Y. Filed Sept. 26, 1967.

BTC

For Periodical Magazine Relating to Travel (Int. Cl. 16).
First use May 16, 1967.

SN 287,226. Mennonite Broadcasts, Incorporated, Harrisonburg, Va. Filed Dec. 19, 1967.

Alive

For Magazine (Int. Cl. 16).
First use Aug. 30, 1967.

SN 289,035. Scholastic Magazines, Inc., New York, N.Y. Filed Jan. 17, 1968.

SBS

For Books (Int. Cl. 16).
First use September 1957.

SN 289,036. Scholastic Magazines, Inc., New York, N.Y. Filed Jan. 17, 1968.

SBS

For Books (Int. Cl. 16).
First use November 1957.

SN 294,350. Gallant Publishing Company, Inc., Covina, Calif. Filed Mar. 28, 1968.

HORSE & RIDER

For Magazine (Int. Cl. 16).
First use Mar. 1, 1968.

SN 296,401. Children's Playmate Magazine Inc., Cleveland, Ohio. Filed Apr. 24, 1968.

CHILDREN'S PLAYMATE

For Magazine (Int. Cl. 16).
First use in or about June 1929.

SN 296,623. The Travelodge Corporation, El Cajon, Calif. Filed Apr. 26, 1968.

TRAVELODGER INTERNATIONAL

Owner of Reg. Nos. 575,271 and 804,853.
For Monthly House Organ (Int. Cl. 16).
First use February 1968; November 1957 as to the term "Travelodger"; July 1964 as to the term "Travelodger International."

Class 39 — Clothing

SN 253,431. Grampian Textiles Limited, Glasgow, Scotland. Filed Aug. 30, 1966.

MOONDREAM

Owner of British Reg. Nos. 874,122, dated Jan. 12, 1965, and 875,156, dated Feb. 3, 1965.
For Jumpers, Cardigans, Skirts, Suits, and Jackets (Int. Cl. 25).

SN 261,654. The Fleischer Shoe Company, Canton, Ohio. Filed Dec. 29, 1966.

"Gridirons"

For Shoes, Slippers, and Boots for Men, Women, and Children (Int. Cl. 25).
First use as early as Feb. 15, 1966.

SN 263,446. Bobbie Brooks, Incorporated, Cleveland, Ohio. Filed Jan. 27, 1967.

THE SQUASHABLES

For Women's Jackets, Skirts, Pants, and Hats, Being Crease Resistant Garments (Int. Cl. 25).
First use Nov. 3, 1966.

SN 268,385. Dial Shoe Company, Inc., Philadelphia, Pa. Filed Apr. 5, 1967.

TRU-GRIP

For Footwear (Int. Cl. 25).
First use August 1924.

SN 268,442. Triumph International Aktiengesellschaft, Munich, Germany. Filed Apr. 5, 1967.

ELASTI-BELLA

Owner of German Reg. No. 795,732, dated Sept. 2, 1964.
For Bathing Suits, Swimming Trunks, Bath Robes; Knitted Shirts, Shorts, Sweaters, Jackets; Bodice Goods—Namely, Bodices, Corsets, Corselets, Girdles, Foundations, Garter Belts, and Brassieres; Ladies' Skirts, Outer Coats, Suits, and Blouses (Int. Cl. 25).

SN 268,620. Riverside Manufacturing Company, Moultrie, Ga. Filed Apr. 7, 1967.

MASTERPREST

For Business, Industrial, and Work Garments and Accessories—Namely, Uniforms, Shirts, Trousers, Jackets, and Caps (Int. Cl. 25).
First use Mar. 17, 1967.
Subj. to Intf. with SN 286,693.

SN 270,288. The Servus Rubber Company, Rock Island, Ill. Filed Apr. 28, 1967.

GALANTES

For Footwear, Made by Molding Water Resistant Synthetic Plastic (Int. Cl. 25).
First use Apr. 26, 1967.

SN 270,815. Sarong, Inc., Dover, Del. Filed May 5, 1967.

MINIGARTER

For Garters (Int. Cl. 25).
First use May 3, 1967.

SN 270,821. Tern-Consulate Limited, London, England. Filed May 5, 1967.

Her TERN

Owner of British Reg. No. 812,983, dated Nov. 7, 1960; and U.S. Reg. No. 649,775.
For Shirts and Collars (for Wear), All for Women and Girls (Int. Cl. 25).

SN 270,985. Ty Lorran Inc., Farmingdale, N.Y. Filed May 8, 1967.

TY LORRAN

The name "Ty Lorran" is fanciful.
For Knitted Shirts, Sweaters, and Vests (Int. Cl. 25).
First use at least as early as Apr. 20, 1967.

SN 271,524. Sally Gee, Inc., New York, N.Y. Filed May 15, 1967.

SCISSOR FASHIONS BY SALLY GEE

The word "Fashions" is disclaimed apart from the mark as shown. Owner of Reg. Nos. 748,503, 803,142, and 803,143.
For Bow Ties, Scarfs, and Shifts (Int. Cl. 25).
First use Apr. 15, 1967.

SN 271,909. A. S. Beck Shoe Corporation, New York, N.Y. Filed May 19, 1967.

c. h. baker

The name "C. H. Baker" does not refer to any living individual.
For Women's Shoes (Int. Cl. 25).
First use in or about March 1919.

SN 272,695. Central Knitwear, Inc., New York, N.Y. Filed May 31, 1967.

Glamour-Knit

For Ladies' and Misses' Sweaters, Knitted Suits, and Dresses (Int. Cl. 25).
First use January 1939.

SN 274,739. Ellen Hart, Inc., New York, N.Y. Filed June 26, 1967.

Hartsville

For Ladies' Dresses (Int. Cl. 25).
First use Jan. 9, 1967.

SN 274,805. Leath, McCarthy & Maynard, Inc., Burlington, N.C. Filed June 26, 1967.

COLLEGE HALL

For Ladies' Hosiery (Int. Cl. 25).
First use June 5, 1967.

SN 275,225. Capri Beachwear, Inc., East Farmingdale, N.Y. Filed July 3, 1967.

Colony

For Women's and Children's Swimwear (Int. Cl. 25).
First use at least as early as Jan. 3, 1957.

SN 276,772. United States Purchasing Exchange, North Hollywood, Calif. Filed July 25, 1967.

WINDJAMMER

For Hosiery and Men's Support Socks (Int. Cl. 25).
First use Jan. 7, 1966.

SN 280,352. Texas-Sun Glove Company, Corsicana, Tex. Filed Sept. 14, 1967.

Black Knight

Owner of Reg. No. 799,920.
For Work Gloves (Int. Cl. 25).
First use Aug. 10, 1967; Nov. 30, 1951, as to "Black Knight."

SN 280,416. The Hall Mark Shirt Company Limited, London, England. Filed Sept. 15, 1967.

TOPPICKERS

Owner of British Reg. No. B889,998, dated Jan. 31, 1966.
For Shirts for Men and Boys, and Blouses for Women and Girls (Int. Cl. 25).

SN 280,952. Elie Jacobson, Paris, France. Filed Sept. 22, 1967.

dorothée bis

Owner of French Reg. No. 532,674, dated June 14, 1965 (Seine); Natl. Inst. No. 251,982.
For Articles of Wearing Apparel for Women—Namely, Dresses, Coats, Blouses, Skirts, Suits, Two-Piece Costumes or Suits, Sweaters, Bodices, Pullovers, Caps, Hats, Trousers, Stockings, Boots, and Shoes (Int. Cl. 25).

SN 281,030. Capezio, Inc., New York, N.Y. Filed Sept. 25, 1967.

For Shoes, Tights, and Leotards (Int. Cl. 25).
First use Aug. 24, 1967.

SN 281,169. Bayard Shirt Corp., New York, N.Y. Filed Sept. 26, 1967.

WashMe

Applicant disclaims the word "Wash" apart from the mark as shown.
For Ladies' Dresses and Sportswear—Namely, Blouses, Shirts, and Pant Tops (Int. Cl. 25).
First use Sept. 1, 1967.

SN 281,317. S.A. Midi-Textile, Nimes, France. Filed Sept. 27, 1967.

Claude LERINS

The name "Claude Lerins" is fictitious. Owner of French Reg. No. 719,668, dated Oct. 4, 1966.
For Shirts, Blouses, Pullovers, Pajamas, Sweaters, Jackets, Trousers, Boots, Shoes, Slippers, Lingerie, Handkerchiefs, and Neckties (Int. Cl. 25).
First use September 1966; in commerce February 1967.

SN 281,380. Sam Margulies, d.b.a. Tom Thumb Shoe Company, Baltimore, Md. Filed Sept. 28, 1967.

TOM THUMB

For Children's Shoes (Int. Cl. 25).
First use June 1961.

SN 281,602. Mayflower Dress Co., New York, N.Y. Filed Oct. 2, 1967.

LINCOLN CENTER

For Women's, Ladies', and Misses' Dresses, Shifts, Shirts, Blouses, Slacks, Culottes, Jackets, and Skirts (Int. Cl. 25).
First use Mar. 1, 1966.

SN 281,805. McGregor-Doniger Inc., New York, N.Y. Filed Oct. 4, 1967.

BERNASETA

For Knitted Garments—Namely, Shells, Sweaters, and Skirts (Int. Cl. 25).
First use Sept. 21, 1967.

SN 282,573. Glensder Corporation, New York, N.Y. Filed Oct. 16, 1967.

LANKY-SCARF

The word "Scarf" is disclaimed apart from the mark as shown.
For Ladies' and Misses' Scarfs (Int. Cl. 25).
First use Mar. 1, 1967.

SN 282,905. S. S. Kresge Company, Detroit, Mich. Filed Oct. 19, 1967.

For Women's Dresses and Ladies' and Girls' T-Shirts (Int. Cl. 25).
First use on or before July 1, 1967.

SN 282,976. Buscarlet Glove Co., Inc., New York, N.Y. Filed Oct. 20, 1967.

KISLAV CO-EDS

Owner of Reg. Nos. 200,331, 328,864, and others.
For Leather Gloves (Int. Cl. 25).
First use Feb. 7, 1967.

SN 283,169. Standard International Corporation, Andover, Mass. Filed Oct. 23, 1967.

LANHAM CLOTHES

Applicant disclaims the word "Clothes" apart from the mark as shown.
For Men's Suits and Sport Coats (Int. Cl. 25).
First use Aug. 14, 1967.

SN 283,587. Phillips-Van Heusen Corporation, New York, N.Y. Filed Oct. 27, 1967.

VAN MALI

For Men's and Boys' Shirts, Cuffs, Collars, Pajamas, Sports Shirts, Underwear, Knit Shirts, Slacks, and Sweaters (Int. Cl. 25).
First use Aug. 2, 1967.

SN 284,058. W. G. Inc., Beaumont, Tex. Filed Nov. 2, 1967.

TINY TEAM

For Children's Football Jerseys (Int. Cl. 25).
First use at least as early as August 1966.

SN 285,405. Eddy Bros. Co., Inc., Los Angeles, Calif. Filed Nov. 22, 1967.

GOLF CIRCUIT

For Men's and Women's Hats and Jackets (Int. Cl. 25).
First use July 24, 1967.

SN 285,465. David H. Smith, Inc., Lynn, Mass. Filed Nov. 22, 1967.

THE SMITTY

For Women's Dresses (Int. Cl. 25).
First use Nov. 6, 1967.
Subj. to Intf. with SN 284,945.

SN 285,572. Phyllis Sportswear, Inc., New York, N.Y. Filed Nov. 24, 1967.

THE Phyllis LOOK

For Women's Dresses, Blouses, Skirts, and Suits (Int. Cl. 25).
First use Aug. 1, 1967.

SN 285,654. El Corte Ingles, S.A., Madrid, Spain. Filed Nov. 27, 1967.

HISPACOR

The word "Hispacor" is fanciful.
For Jackets, Raincoats, Coats, Sack Coats, Vests, Suits, and Dresses, for Gentlemen, Women, and Children (Int. Cl. 25).
First use June 8, 1964; in commerce Mar. 8, 1966.

SN 285,702. Mercantile Stores Company, Inc., New York, N.Y. Filed Nov. 28, 1967.

SHOETIQUE

For Shoes (Int. Cl. 25).
First use Aug. 28, 1967.

SN 285,705. Originala Incorporated, New York, N.Y. Filed Nov. 28, 1967.

AQUATOGS

For Raincoats, Rain Suits, and Rain Dresses (Int. Cl. 25).
First use on or about Mar. 14, 1944.

SN 286,693. Master Trouser Corporation, New York, N.Y. Filed Dec. 11, 1967.

MASTER-PREST

Owner of Reg. Nos. 796,424 and 815,024.
For Men's, Boys', and Women's Trousers and Slacks (Int. Cl. 25).
First use June 1, 1966.
Subj. to Intf. with SN 268,620.

SN 287,189. Trimfoot Company, St. Louis, Mo. Filed Dec. 18, 1967.

Baby Deer Shoes
of machine washable DOVEEN

The words "of Machine Washable" and "Shoes," and the pictorial representation of the shoes are disclaimed apart from the mark as shown. Owner of Reg. Nos. 612,611 and 690,946.
For Infants' Shoes (Int. Cl. 25).
First use on or about Oct. 1, 1967.

SN 287,976. Wohl Shoe Company, St. Louis, Mo. Filed Jan. 2, 1968.

Ramon Diego

The name "Ramon Diego" is fanciful.
For Women's Shoes (Int. Cl. 25).
First use Sept. 15, 1967.

SN 288,310. Hanes Corporation, Winston-Salem, N.C. Filed Jan. 8, 1968.

PANTI-MANIA

For Ladies' Hosiery (Int. Cl. 25).
First use Dec. 22, 1967.

SN 288,311. Hanes Corporation, Winston-Salem, N.C. Filed Jan. 8, 1968.

PANTI-MONIUM

For Ladies' Hosiery (Int. Cl. 25).
First use Dec. 22, 1967.

SN 288,667. Alps Sportswear Mfg. Co., Inc., Lawrence, Mass. Filed Jan. 12, 1968.

For Men's, Boys', Ladies', and Girls' Sportswear—Namely, Sweaters, Jackets, Sport Shirts, Sweater-Shirts, Pants, Slacks, and Swimwear (Int. Cl. 25).
First use Sept. 1, 1967.

SN 288,865. St. Louis Shoe Corporation, St. Louis, Mo. Filed Jan. 15, 1968.

LA PATTI

Owner of Reg. No. 408,726.
For Women's and Misses' Shoes (Int. Cl. 25).
First use June 1, 1943.

SN 289,523. Ferdinand Nusbaum, New York, N.Y. Filed Jan. 24, 1968.

FUN CITY

Owner of Reg. No. 841,281.
For Men's Sweaters (Int. Cl. 25).
First use Jan. 17, 1967.

SN 289,527. Peerless Robes & Sportswear, Inc., Waterville, Maine. Filed Jan. 24, 1968.

Peer

For Men's Shirts (Int. Cl. 25).
First use Jan. 30, 1964.

SN 289,713. J. C. Penney Company, New York, N.Y. Filed Jan. 26, 1968.

PEDIBUMPERS

For Infants' Sleepwear (Int. Cl. 25).
First use 1967.

SN 289,791. Dunn and McCarthy, Inc., Auburn, N.Y. Filed Jan. 29, 1968.

HEEL HUGGERS

For Boots and Shoes (Int. Cl. 25).
First use Jan. 4, 1923.

SN 290,018. Puritan Fashions Corporation, New York, N.Y. Filed Jan. 31, 1968.

DITHER

For Women's Wear—Namely, Dresses, Blouses, and Dress Ensembles (Int. Cl. 25).
First use December 1966.

SN 290,315. Neiman-Marcus Company, Dallas, Tex. Filed Feb. 5, 1968.

For Men's Apparel and Furnishings—Namely, Suits, Coats, Hats, Shoes, Shirts, Sweaters, Slacks, Ties, Socks, Shorts, and Undershirts (Int. Cl. 25).
First use Oct. 1, 1962.

SN 290,765. J. P. Stevens & Co., Inc., New York, N.Y. Filed Feb. 9, 1968.

SPIRIT-ESSE

Owner of Reg. No. 825,811.
For Hosiery (Int. Cl. 25).
First use Jan. 12, 1968.

SN 290,766. J. P. Stevens & Co., Inc., New York, N.Y. Filed Feb. 9, 1968.

SPIRIT-EEN

Owner of Reg. No. 825,811.
For Hosiery (Int. Cl. 25).
First use Jan. 12, 1968.

SN 290,926. Wynn, Inc., Knoxville, Tenn. Filed Feb. 12, 1968.

Irish Kings

For Blazers (Int. Cl. 25).
First use on or about Nov. 16, 1967.

SN 291,192. S. D. Arrowood & Co. Inc., New York, N.Y. Filed Feb. 15, 1968.

VANGILONS

For Ladies' Hosiery (Int. Cl. 25).
First use Feb. 2, 1968.

SN 291,195. S.p.A. Diva-Fabbrica Cravatte e Tessuti per Cravatte, Milan, Italy. Filed Feb. 15, 1968.

DIVA

For Neckties (Int. Cl. 25).
First use March 1922; in commerce 1948.

SN 292,153. E-Z Mills, Inc., New York, N.Y. Filed Feb. 29, 1968.

ACTOSTRETCH

For Underwear (Int. Cl. 25).
First use Feb. 20, 1968.

SN 292,154. E-Z Mills, Inc., New York, N.Y. Filed Feb. 29, 1968.

ACTOFIT

For Underwear (Int. Cl. 25).
First use Feb. 19, 1968.

SN 292,541. Arwa Feinstrumpfwerke Hans Thierfelder, Bischofswiesen, near Berchtesgaden, Germany. Filed Mar. 6, 1968.

LADY PEP

Priority claimed under Sec. 44(d) on German application filed Nov. 28, 1967; Reg. No. 841,941, dated Jan. 30, 1968.
For Hosiery (Int. Cl. 25).

SN 294,147. Parke, Davis & Company, Detroit, Mich. Filed Mar. 26, 1968.

DURASORB

Owner of Reg. No. 819,601.
For Diapers (Int. Cl. 25).
First use on or before Jan. 1, 1968.

SN 294,356. Melville Shoe Corporation, New York, N.Y. Filed Mar. 28, 1968.

BOOGALOOS

For Men's and Women's Shoes (Int. Cl. 25).
First use Mar. 4, 1968.

SN 295,032. Infants Socks, Inc., Reading, Pa. Filed Apr. 5, 1968.

REVELRY

For Polo Shirts and Hosiery (Int. Cl. 25).
First use Mar. 8, 1946.

SN 296,284. Wilkinson's Inc. of St. Louis, St. Louis, Mo. Filed Apr. 23, 1968.

Wilkinson's

For Men's Suits, Top Coats, Raincoats, Trousers, Sport Coats, Formal Suits, Hats, Shirts, Neckwear, Underwear, Hosiery, Pajamas, Belts, Robes, Sweaters, Walking Shorts, and Swim Suits (Int. Cl. 25).
First use Dec. 10, 1967; about 1933 as to "Wilkinson"; about June 1, 1950, as to "Wilkinson's."

SN 296,285. Wilkinson's Inc. of St. Louis, St. Louis, Mo. Filed Apr. 23, 1968.

Wilkinson's

For Men's Suits, Top Coats, Raincoats, Trousers, Sport Coats, Formal Suits, Hats, Shirts, Neckwear, Underwear, Hosiery, Pajamas, Belts, Robes, Sweaters, Walking Shorts, and Swim Suits (Int. Cl. 25).
First use about June 1, 1950; about 1933 as to "Wilkinson."

SN 298,084. Blue Bell, Inc., Greensboro, N.C. Filed May 14, 1968.

BAGGIES

For Slacks for Men and Boys (Int. Cl. 25).
First use Apr. 15, 1968.

SN 298,607. S. S. Kresge Company, Detroit, Mich. Filed May 20, 1968.

SSK

For Shoes and Hosiery (Int. Cl. 25).
First use in or before July 1967.

SN 298,673. Charles Komar & Sons, Inc., South Amboy, N.J. Filed May 21, 1968.

Komar

For Ladies' and Misses' Lingerie and Sleepwear (Int. Cl. 25).
First use as early as 1950.

SN 298,776. Melville Shoe Corporation, New York, N.Y. Filed May 22, 1968.

GETAWAYS

For Women's and Misses' Shoes (Int. Cl. 25).
First use May 16, 1968.

Class 40 — Fancy Goods, Furnishings, and Notions

SN 277,493. Gaza Hair Products, Clarksburg, W. Va. Filed Aug. 4, 1967.

MINI-STREAK

For Small Bunches of Synthetic Brightly Colored Fibers Secured to Hair Clips for Use in Decorating Hair (Int. Cl. 26).
First use July 1, 1967.

SN 290,946. Bishop Industries Inc., Union, N.J. Filed Feb. 13, 1968.

CHAPELLI

For Hair Pieces (Int. Cl. 26).
First use Dec. 15, 1967.

SN 297,250. Fashion Tress, Inc., Miami Beach, Fla. Filed May 3, 1968.

KISSCADE

For Ladies' Wigs and Hairpieces (Int. Cl. 26).
First use Apr. 2, 1968.

Class 42 — Knitted, Netted, and Textile Fabrics, and Substitutes Therefor

SN 274,789. U.S. Fibres, Inc., Detroit, Mich. Filed June 26, 1967.

CARPETMATE

For Carpet Underlay (Int. Cl. 27).
First use Apr. 25, 1967.

SN 285,833. Kenneth Erwin Harmon, Palm Bay, Fla. Filed Nov. 29, 1967.

WOVEN WIND

Applicant disclaims the word "Woven."
For Fabrics for Making Into Jackets, Coats, Trousers, Shirts, and the Like (Int. Cl. 24).
First use Nov. 1, 1965.

SN 289,758. Albany Felt Company, Albany, N.Y. Filed Jan. 29, 1968.

FLOTAIN

For Synthetic Fabric Used in the Pulp and Paper Industry as Washer Covers and for Filtration (Int. Cl. 24).
First use on or about Jan. 15, 1968.

SN 289,794. William Ewart & Son, New York, Ltd., New York, N.Y. Filed Jan. 29, 1968.

ERINPRESS

For Tabelcloths, Napkins, and Place Mats (Int. Cl. 24).
First use Nov. 20, 1967.

SN 290,028. J. P. Stevens & Co., Inc., New York, N.Y. Filed Jan. 31, 1968.

TASTEMAKER

Owner of Reg. Nos. 670,661 and 776,673.
For Bath Mats and Bath Rugs and Accent and Area Rugs of Natural Fibers Including Wool and Cotton and of Synthetic Fibers and Blends of the Foregoing, Mattress Ticking, Drapery Fabrics and Finished Draperies and Upholstery Fabric of One or More Natural Fibers Including Wool and Cotton, or Synthetic Fibers or Cellulosic Fibers or Blends of the Foregoing (Int. Cls. 24 and 27).
First use Nov. 15, 1963.

SN 290,179. Mary Kushnir and Hilda Kushnir (partnership), Pueblo, Colo. Filed Feb. 2, 1968.

BO-PAC

For Pillow Casings (Int. Cl. 24).
First use Sept. 7, 1967.

SN 290,180. Mary Kushnir and Hilda Kushnir (partnership), Pueblo, Colo. Filed Feb. 2, 1968.

BO-KEEP

For Pillow Casings (Int. Cl. 24).
First use Sept. 7, 1967.

SN 290,594. Fieldcrest Mills, Inc., Eden, N.C. Filed Feb. 8, 1968.

dinameau

For Textile Rugs and Carpeting (Int. Cl. 27).
First use July 14, 1967.

SN 290,643. Photogramics, Inc., Chicago, Ill. Filed Feb. 8, 1968.

CAMERA CRAFTED

For Slipcovers (Int. Cl. 24).
First use on or about Aug. 15, 1967.

SN 295,885. French Fabrics Corporation, New York, N.Y. Filed Apr. 18, 1968.

pasholon

For Textile Fabrics of Wool, Silk, Cotton, and Synthetic Fibers, and Combinations Thereof (Int. Cl. 24).
First use Mar. 1, 1968.

SN 297,133. Ametek, Inc., New York, N.Y. Filed May 2, 1968.

AMETEK

The drawing is lined for red. Owner of Reg. Nos. 744,348, 794,058, and others.
For Filter Fabric in the Piece (Int. Cl. 24).
First use Mar. 29, 1967.

SN 298,390. B. E. Williams, La Grange Park, Ill. Filed May 17, 1968.

ONE HUNDRED (100) TRIPPER

Owner of Reg. No. 831,133.
For Beef Shrouds (Int. Cl. 24).
First use in March 1968.

SN 298,511. Heidenberg Textile Fabrics Co., Inc., New York, N.Y. Filed May 20, 1968.

EVERLON

Owner of Reg. No. 577,106.
For Window Curtains and Drapes (Int. Cl. 24).
First use Nov. 12, 1952.

Class 43 — Thread and Yarn

SN 274,062. Grove Silk Company, Scranton, Pa. Filed June 16, 1967.

SOFT-LOFT

For Yarn (Int. Cl. 23).
First use March 1964.

Class 44 — Dental, Medical, and Surgical Appliances

SN 246,119. Williams Gold Refining Co. Inc., Buffalo, N.Y. Filed May 19, 1966.

VIVOSTAR

Owner of Reg. No. 827,232.
For Measuring Gauges, Articulators, Boley Gauges, and Vernier Calipers, the Foregoing Being Used for Measuring Length, Distance, and Thickness in Manufacturing Articles Using Precious Metals and Precious Metal Alloys (Int. Cl. 9).
First use Feb. 16, 1966.

SN 276,694. Scania Dentalmaterial Aktiebolag, Hagersten, Sweden. Filed July 24, 1967.

SCANECTA CROWNS

No claim is made to the word "Crowns" apart from the mark as shown. Owner of Swedish Reg. No. 117,796, dated Oct. 14, 1966.
For Artificial Teeth and Crowns of Teeth (Int. Cl. 10).

SN 279,565. Products Design and Development Co., West Palm Beach, Fla. Filed Sept. 1, 1967.

TURBOBRUSH

For Oral Hygiene Water Pulse Unit and Related Accessories (Int. Cl. 10).
First use July 20, 1967.

SN 284,402. George H. Stafford, d.b.a. Exertone Products, Santa Monica, Calif. Filed Nov. 8, 1967.

EXERTONE

For Cordless Electronic Facial Exercisers (Int. Cl. 10).
First use Sept. 5, 1967.

SN 285,315. H. E. Douglass Engineering Sales Co., Burbank, Calif. Filed Nov. 21, 1967.

SOUND SENTRY

The word "Sound" is disclaimed apart from the mark as shown.
For Ear Protectors of the Type Used To Protect the Ears of the Wearer Against Loud Noise (Int. Cl. 10).
First use Oct. 12, 1966.

SN 285,710. H. W. Andersen Products, Inc., Oyster Bay, N.Y. Filed Nov. 28, 1967.

ANDERSEN

For Tubular Medical Appliances—Namely, Plastic Tubing for Insertion Into Body Cavities for Purposes of Drainage, Irrigation, or Aspiration (Int. Cl. 10).
First use July 1961.

SN 287,625. American Hygienic Co., Baltimore, Md. Filed Dec. 27, 1967.

Applicant disclaims the word "Brand" apart from the mark as shown.
For Prophylactic Articles for Prevention of Contagious Diseases (Int. Cl. 10).
First use at least as early as 1953; at least as early as June 8, 1936, in a different form.

SN 287,727. Cosmevo Surgical & Orthopedic Corp., Hackensack, N.J. Filed Dec. 28, 1967.

COSMEVO

For Surgical Supplies and Equipment, and Orthopedic Garments—Namely, Surgical Cabinets, Bowls, Receptacles, Beds and Chairs; Diagnostic and Surgical Instruments, Namely, Forceps, Scissors, Knives, Sutures and Clamps; Physicians' Scales; Orthopedic Supports and Artificial Limbs; Hydrotherapy Baths; Sterilizers; Electric Treating and Diagnostic Devices, Namely, Muscle Stimulators, Electro-Cardiographs; Surgical Garments; and Surgical Dressings (Int. Cls. 5, 9, 10, and 11).
First use October 1927.

SN 287,761. Prak-T-Kal Corporation, Elizabeth, N.J. Filed Dec. 28, 1967.

FROSTY-STEEMY

Owner of Reg. No. 803,997.
For Humidifier-Vaporizer for Medical Application (Int. Cl. 10).
First use Dec. 7, 1966.

SN 289,068. American Optical Corporation, Southbridge, Mass. Filed Jan. 18, 1968.

MONOPLEX

Owner of Reg. No. 437,304.
For Artificial Eyes (Int. Cl. 10).
First use June 27, 1945.

SN 294,432. Aamed, Inc., Forest Park, Ill. Filed Mar. 29, 1968.

Owner of Reg. Nos. 722,374 and 776,764.
For Medical Appliances—Namely, Wheel Chairs and Braces (Int. Cls. 10 and 12).
First use June 1, 1950.

SN 297,496. American Home Products Corporation, New York, N.Y. Filed May 7, 1968.

FLIGHT

For Sanitary Napkins (Int. Cl. 5).
First use Apr. 2, 1968.

SN 298,088. Thomas J. Mahon, Inc., Englewood Cliffs, N.J. Filed May 14, 1968.

U-MID

Owner of Reg. No. 794,150.
For Inhalation Hose for Use With Anesthetic Agents (Int. Cl. 10).
First use Mar. 27, 1968.

Class 45 — Soft Drinks and Carbonated Waters

SN 259,868. Don the Beachcomber, Los Angeles, Calif., assignee of Vita-Pakt Citrus Products Co., Covina, Calif. Filed Dec. 1, 1966.

Owner of Reg. Nos. 386,863, 520,918, and 770,050.
For Non-Alcoholic Mixes for Use in Making Alcoholic Cocktails (Int. Cl. 32).
First use first part of July 1962.

SN 267,412. Feigenson, Incorporated, d.b.a. Faygo Beverage Company, Detroit, Mich. Filed Mar. 23, 1967.

No claim is made to the words "Cherry Cola" apart from the mark as shown.
For Cherry Flavored, Cola-Type Soft Drinks (Int. Cl. 32).
First use Mar. 13, 1967.

Class 46 — Foods and Ingredients of Foods

SN 250,791. Waples-Platter Company, Forth Worth, Tex. Filed July 21, 1966.

The drawing is lined for red and yellow. Owner of Reg. Nos. 521,081 and 726,319.
For Canned Beans, Spaghetti, Black-Eyed Peas, and Coffee (Int. Cls. 29 and 30).
First use Sept. 1, 1933.

SN 269,111. Sambo's, Inc., Santa Barbara, Calif. Filed Apr. 13, 1967.

Applicant disclaims the representation of the pancake. The drawing is lined for yellow and orange. Owner of Reg. No. 746,297.
For Instant Pancake Mix (Int. Cl. 30).
First use Nov. 7, 1966.

SN 269,112. Sambo's, Inc., Santa Barbara, Calif. Filed Apr. 13, 1967.

The drawing is lined for violet. Owner of Reg. No. 746,297.
For Instant Pancake Mix (Int. Cl. 30).
First use Nov. 7, 1966.

SN 269,307. Flora Mir Candy Corporation, Brooklyn, N.Y. Filed Apr. 17, 1967.

The expression "Flora Mir" is fanciful. Without waiving any of its common-law rights and for purposes of this registration only, applicant disclaims the words "The Most Luxurious Chocolates in the World" apart from the mark as shown. Owner of Reg. Nos. 242,517, 538,176, and 539,668.
For Confectionery—Namely, Candies, Chocolates, Hard Candies, Nuts, and Cookies (Int. Cl. 30).
First use at least as early as December 1964; Sept. 6, 1927, as to "Flora Mir."

SN 270,302. Wallace & Tiernan Inc., East Orange, N.J. Filed Apr. 28, 1967.

WaTox

For Oxidizing Agent for Improving Flour (Int. Cl. 1).
First use Apr. 24, 1967.

SN 270,746. Awrey Bakeries, Incorporated, Detroit, Mich. Filed May 5, 1967.

AWREY

For Bakery Products—Namely, Bread, Cakes, Pies, Pastries, Rolls, Buns, Cookies and Biscuits, Donuts, Muffins, and Bread Sticks; Potato Chips, Pretzels, and Corn Chips; Chocolate for Eating Purposes and Candy (Int. Cls. 29 and 30).
First use Sept. 26, 1966.

SN 272,498. Keebler Company, Elmhurst, Ill. Filed May 26, 1967.

CHICKEN LICKENS

The word "Chicken" is disclaimed apart from the mark as shown.
For Crackers Containing Artificial Chicken Flavoring (Int. Cl. 30).
First use Apr. 5, 1967.

SN 276,083. Awrey Bakeries, Incorporated, Detroit, Mich. Filed July 17, 1967.

AWREY

For Bakery Products—Namely, Bread, Cakes, Pies, Pastries, Rolls, Buns, Cookies and Biscuits, Donuts, Muffins, and Bread Sticks; Potato Chips, Pretzels and Corn Chips; Chocolate for Eating Purposes and Candy (Int. Cls. 29 and 30).
First use Feb. 1, 1912.

SN 276,354. A. H. Robins Company, Incorporated, Richmond, Va. Filed July 19, 1967.

SP

Applicant disclaims the word "Products" apart from the mark as shown.
For Snack Foods—Namely, Candies, Potato Chips, Pork Rinds, Corn Cheese Puffs, Crackers, Corn Chips, Cookie Sandwiches, Salted Peanuts, Soup Crackers, Popcorn, Pies, and Cakes (Int. Cls. 29 and 30).
First use June 16, 1967; June 1940 in a different form.

SN 276,527. Bissinger's, Inc., Cincinnati, Ohio. Filed July 21, 1967.

fleur de lis

For Candy (Int. Cl. 30).
First use June 30, 1967.

SN 281,901. Lamb-Weston, Inc., Portland, Oreg. Filed Oct. 5, 1967.

CONCERTINAS

For Crinkle Cut Frozen French Fried Potatoes (Int. Cl. 29).
First use Sept. 20, 1967.

SN 282,578. H & H Poultry Company, Inc., Selbyville, Del. Filed Oct. 16, 1967.

PEPPER'S PRIDE

For Frozen and Fresh Dressed Fowl, Turkeys and Chickens (Int. Cl. 29).
First use January 1959.

SN 284,634. A. Duda & Sons Cooperative Association, Oviedo, Fla. Filed Nov. 13, 1967.

DU-CEL

For Fresh Vegetables—Namely, Escarole, Chicory, and Romaine (Int. Cl. 31).
First use Jan. 30, 1963.

SN 284,838. W. B. Roddenbery Co., Inc., Cairo, Ga. Filed Nov. 14, 1967.

Pickles
ARE A MEAL'S BEST FRIEND!

Applicant disclaims the word "Pickles" apart from the mark as shown. Owner of Reg. No. 733,189.
For Pickles (Int. Cl. 29).
First use at least as early as May 15, 1960.

SN 285,993. Carnation Company, Los Angeles, Calif. Filed Dec. 1, 1967.

CHURCH SOCIAL

For Frozen Prepared Ready-To-Eat Casseroles—Namely, Vegetables With Noodles, Veal Scallopini, Hungarian Goulash, Cajun Jambalaya, Beef Stroganoff, and Chicken Cacciatore (Int. Cl. 29).
First use Oct. 30, 1967.

SN 286,280. Ralston Purina Company, St. Louis, Mo. Filed Dec. 5, 1967.

CHECKERBOARD

Owner of Reg. Nos. 35,569, 773,299, and others.
For Cattle Feeds (Int. Cl. 31).
First use Sept. 29, 1959.

SN 287,294. H. P. Hood & Sons, Inc. d.b.a. H. P. Hood & Sons, Boston, Mass. Filed Dec. 20, 1967.

CORONET

Owner of Reg. No. 689,595.
For Ice Cream (Int. Cl. 30).
First use Nov. 15, 1950.

SN 287,370. Marshall Farms, Detroit, Mich. Filed Dec. 21, 1967.

TRUE-SLICE

For Precooked Boneless Turkey Roll (Int. Cl. 29).
First use Nov. 1, 1967.

SN 287,811. East Coast Fruit Company, Jacksonville, Fla. Filed Dec. 29, 1967.

SIR TOM

Owner of Reg. No. 740,282.
For Fresh Tomatoes (Int. Cl. 31).
First Use Nov. 24, 1967.

SN 289,483. Clovis Citrus Company, Clovis, Calif. Filed Jan. 24, 1968.

ACADEMY

For Fresh Citrus Fruits (Int. Cl. 31).
First use Nov. 15, 1967.

SN 289,484. Clovis Citrus Company, Clovis, Calif. Filed Jan. 24, 1968.

HARLAN RANCH

For Fresh Citrus Fruits (Int. Cl. 31).
First use Dec. 20, 1967.

SN 290,010. The Pillsbury Company, Minneapolis, Minn. Filed Jan. 31, 1968.

SNACK-A-TIZERS

For Flavored Fresh Dough for Preparing Food Snacks (Int. Cl. 30).
First use Oct. 27, 1967.

SN 290,114. Toasta Foods Company, Minneapolis, Minn. Filed Feb. 1, 1968.

Toasta

Owner of Reg. No. 796,487.
For Frozen Pizza (Int. Cl. 30).
First use August 1965; October 1961 as to "Toasts."

SN 290,188. Ocean Spray Cranberries, Inc., Hanson, Mass. Filed Feb. 2, 1968.

OCEAN SPRAY

Owner of Reg. Nos. 196,795 and 803,180.
For Apple Sauce (Int. Cl. 29).
First use Apr. 7, 1967.

SN 912,470. M. Polaner & Son, Inc., Newark, N.J. Filed Feb. 20, 1968.

FANCY FRUIT FARMS

For Jam, Jelly, Marmalade, Preserves, Fruit Syrups, Maple Syrup, Pickles, Pickled Peppers and Tomatoes, Relishes, Barbecue, Spare-Rib, Duck and Sweet and Pungent Sauces, Mustard and Sauerkraut (Int. Cls. 29 and 30).
First use at least as early as 1935.

SN 294,686. Sugardale Foods, Inc., Canton, Ohio. Filed Apr. 1, 1968.

Sugardale

Owner of Reg. No. 438,152 and others.
For Bacon, Bologna, Corned Beef, Fresh Beef, Ham, Ham and Cheese Loaf, Lard, Luncheon Meats, Pork, Refrigerated Cuts of Prepared Meats, Salami, Sausage, and Wieners (Int. Cl. 29).
First use in or about 1935.

SN 294,963. The National Sugar Refining Company, New York, N.Y. Filed Apr. 4, 1968.

JACK FROST

Owner of Reg. No. 322,756.
For Sugar (Int. Cl. 30).
First use Feb. 6, 1968.

SN 295,138. W. R. Grace & Co., New York, N.Y. Filed Apr. 8, 1968.

STAREA

For Gelatinized Starch Controlled Mixture for Use in Mixed Feeds for Ruminant Animals (Int. Cl. 31).
First use Feb. 28, 1968.

SN 299,069. Laura Lee Candies, Inc., Miami, Fla. Filed May 27, 1968.

NUTS-A-POPPIN'

For Candies (Int. Cl. 30).
First use Feb. 8, 1961.

SN 299,187. Thomas P. Vujovich, Oxnard, Calif. Filed May 28, 1968.

HAPPY TOM

Owner of Reg. No. 764,048.
For Fresh Vegetables and Fresh Berries (Int. Cl. 31).
First use Apr. 5, 1963.

SN 299,409. Morton International, Inc., Chicago, Ill. Filed May 31, 1968.

AGRI-FLO

Owner of Reg. No. 620,473.
For Salt (Int. Cl. 30).
First use on or about Aug. 28, 1967.

SN 299,410. Santiaga Ranch, Bakersfield, Calif. Filed May 31, 1968.

BuenaVista

"Buena Vista" can be translated to mean "pleasant view."
For Fresh Melons (Int. Cl. 31).
First use July 8, 1967.

SN 299,411. Santiaga Ranch, Bakersfield, Calif. Filed May 31, 1968.

Santiaga

For Fresh Melons (Int. Cl. 31).
First use July 8, 1967.

Class 47 — Wines

SN 289,338. Schenley Distillers, Inc., d.b.a. Roma Wine Company, New York, N.Y. Filed Jan. 22, 1968.

BAUDELAIRE

For Wines (Int. Cl. 33).
First use Sept. 26, 1967.

SN 290,637. Roger Louis Myers, d.b.a. Roger Louis & Co., Bordeaux, France. Filed Feb. 8, 1968.

ROGER LOUIS

For Wine and Champagne (Int. Cl. 33).
First use Nov. 15, 1938; in commerce Nov. 15, 1938.

SN 293,023. De Ladoucette Freres, Paris, France. Filed Mar. 12, 1968.

Comte Lafond

"Comte La Fond" is the name of a living individual whose consent is of record.
For Wines (Int. Cl. 33).
First use January 1968; in commerce Jan. 25, 1968.

Class 48 — Malt Beverages and Liquors

SN 288,889. Tivoli Brewing Company, Denver, Colo. Filed Jan. 15, 1968.

ASPEN GOLD

For Beer (Int. Cl. 32).
First use June 19, 1967.

SN 295,407. Jos. Schlitz Brewing Company, Milwaukee, Wis. Filed Apr. 11, 1968.

Vail

For Beer (Int. Cl. 32).
First use Mar. 29, 1968.

Class 49 — Distilled Alcoholic Liquors

SN 264,148. H. Stone & Co., Ltd., Millburn, N.J., assignee of Ditta Pace-Gipsa-Giacomo Pace Societa in Accomandita Semplice, Rome, Italy. Filed Feb. 7, 1967.

SAMBUCA ROMANA

The Italian word "Romana" is the word for "a woman of Rome." Applicant disclaims the word "Sambuca" apart from the mark as shown. Owner of U.S. Reg. No. 826,998.
For Liqueurs (Int. Cl. 33).
First use May 7, 1962; in commerce Dec. 19, 1963.

SN 278,750. Trojan Distributing Co., Inc., d.b.a. Mexican Import Co., Los Angeles, Calif. Filed Aug. 21, 1967.

EL GRITO

"El Grito" is derived from the Spanish and translated in English means "a shout or a cry."
For Tequila (Int. Cl. 33).
First use July 17, 1967.

SN 278,781. Bohemian Distributing Company, d.b.a. Serge Ritzki & Co., Los Angeles, Calif. Filed Aug. 22, 1967.

MOSKOV

For Vodka (Int. Cl. 33).
First use June 9, 1967.

SN 282,003. John Joseph G. Randazzo, d.b.a. Plessis Import Company, and Antonio Alcanta y Cia, Clayton, Mo. Filed Oct. 6, 1967.

SOLERA RESERVADA

"Solera Reservada" is disclaimed apart from the mark as shown.
For Brandy (Int. Cl. 33).
First use Oct. 2, 1967.

SN 282,985. Continental Distilling Corporation, d.b.a. Continental Distilling Co., Philadelphia, Pa. Filed Oct. 20, 1967.

THE COLDSTREAM GUARD

Owner of Reg. No. 689,618.
For Whisky (Int. 33).
First use at least as early as Aug. 30, 1967.

SN 284,512. Stitzel-Weller Distillery, Louisville, Ky. Filed Nov. 9, 1967.

SOUTHERN SOUR MASH

No rights to the words "Sour Mash," apart from the mark shown, are claimed.
For Bourbon Whiskey (Int. Cl. 33).
First use Feb. 15, 1965.

SN 284,907. W. A. Haller Corporation, Philadelphia, Pa. Filed Nov. 15, 1967.

HALLER'S 7/11

Owner of Reg. Nos. 502,913 and 504,568.
For Whiskey (Int. Cl. 33).
First use at least as early as Nov. 1, 1967; at least as early as December 1906 as to "Haller's."

SN 286,449. Schenley Distillers, Inc., d.b.a. Schenly Distillers, New York, N.Y. Filed Dec. 7, 1967.

XL

Owner of Reg. No. 653,171.
For Whiskey and Brandy (Int. Cl. 33).
First use Oct. 24, 1956.

Class 50 — Merchandise Not Otherwise Classified

SN 264,391. Corham Artificial Flower Co., White Plains, N.Y. Filed Feb. 10, 1967.

CRYSTALIN

For Artificial Flowers (Int. Cl. 26).
First use Jan. 18, 1967.

SN 264,750. Charles G. Malin, d.b.a. Charles Malin Company, Cleveland, Ohio. Filed Feb. 15, 1967.

NOTHING

For Novelty Item Which Can Be Used as a Household Decoration or as a Paperweight (Int. Cl. 20).
First use June 22, 1966.

SN 282,376. A. H. Krueger, Inc., Milwaukee, Wis. Filed Oct. 12, 1967.

UNIVERSAL KAR-STOP

The term "Kar-Stop" is disclaimed apart from the mark as shown.
For Pre-Cast Concrete Parking Area Bumpers (Int. Cl. 19).
First use July 29, 1957.

SN 282,993. Murray Finkelstein, d.b.a. J. Finkelstein & Son, New York, N.Y. Filed Oct. 20, 1967.

TIZIANO GALLI

The name "Tiziano Galli" is that of a living individual, whose consent is of record.
For Ceramic Figures and Figurines (Int. Cl. 21).
First use November 1959.

SN 288,346. Quill Products, Inc., La Habra, Calif. Filed Jan. 8, 1968.

CONTROLA

For Visual Control and Scheduling Boards (Int. Cl. 20).
First use on or before Dec. 14, 1966.

SN 290,305. Litho Chemical & Supply Co., Inc., Lynbrook, N.Y. Filed Feb. 5, 1968.

ASTRO PLATES

The word "Plates" is disclaimed apart from the mark as shown.
For Lithographic Plates (Int. Cl. 16).
First use on or about Dec. 27, 1967.

Class 51 — Cosmetics and Toilet Preparations

SN 249,547. Mayer Laboratories, Inc., San Rafael, Calif. Filed July 5, 1966.

M mayer

Owner of Reg. No. 845,139.
For Moisturizing Cream and Nail Cream (Int. Cl. 3).
First use about Apr. 22, 1966.

SN 267,735. Maria Luisa Marques de Romero, Juarez, Mexico. Filed Mar. 28, 1967.

ZOBLAK

Owner of Mexican Reg. No. 130,593, dated June 3, 1966.
For Hair Tonic (Int. Cl. 3).

SN 273,146. Yardley of London, Inc., Totowa, N.J. Filed June 5, 1967.

MINI-SHADER

For Pressed Powder (Int. Cl. 3).
First use May 19, 1967.

SN 277,553. Fresh Hands Corporation, Spirit Lake, Iowa. Filed Aug. 4, 1967.

FRESH HANDS

Applicant disclaims exclusive use of the word "Hands" apart from the mark as shown.
For Hand Lotion (Int. Cl. 3).
First use Nov. 16, 1965.

SN 286,171. Chas. Pfizer & Co., Inc., New York, N.Y. Filed Dec. 4, 1967.

BLACK BELT

For After Shave Lotion (Int. Cl. 3).
First use Sept. 28, 1967.

SN 286,831. Mr. John, Inc., New York, N.Y. Filed Dec. 13, 1967.

Mr. John

"Mr. John" is the name of a well known designer, whose consent is of record. Owner of Reg. Nos. 549,467, 549,819, and others.
For Colognes, Perfumes, and After-Shave Lotions (Int. Cl. 3).
First use 1961.

SN 286,900. John H. Breck, Inc., Wayne, N.J. Filed Dec. 14, 1967.

LOVE LACE

Owner of Reg. No. 434,149.
For Cologne (Int. Cl. 3).
First use May 8, 1946.

SN 287,134. Avon Products, Inc., New York, N.Y. Filed Dec. 18, 1967.

STAY FAIR

For Night Cream (Int. Cl. 3).
First use Jan. 28, 1967.

SN 296,921. The Gillette Company d.b.a. The Toni Company, Boston, Mass. Filed Apr. 30, 1968.

ANY SHAPE

For Hair Spray (Int. Cl. 3).
First use Apr. 5, 1968.

Class 52 — Detergents and Soaps

SN 277,466. Leathercraft Products Corp., New York, N.Y. Filed Aug. 3, 1967.

Suede-Crafter

Owner of Reg. No. 535,218.
For Cleaning Fluid for Cleaning and Spotting (Int. Cl. 3).
First use Apr. 6, 1964.

SN 288,587. Avon Products, Inc., New York, N.Y. Filed Jan. 11, 1968.

SEAGRASS

For Toilet Soap (Int. Cl. 3).
First use Dec. 28, 1967.

SN 288,589. Avon Products, Inc., New York, N.Y. Filed Jan. 11, 1968.

FRECKLES 'N' FRILLS

For Toilet Soap (Int. Cl. 3).
First use Dec. 28, 1967.

SN 288,591. Avon Products, Inc., New York, N.Y. Filed Jan. 11, 1968.

FLOWER GIRL

For Toilet Soap (Int. Cl. 3).
First use Dec. 28, 1967.

SN 288,593. Avon Products, Inc., New York, N.Y. Filed Jan. 11, 1968.

DOLL HOUSE

For Toilet Soap (Int. Cl. 3).
First use Dec. 28, 1967.

SN 288,960. Kevin Products, Inc., Arlington, Mass. Filed Jan. 16, 1968.

BIO GLIST

For Detergent Preparation for Dishwashing by Hand (Int. Cl. 3).
First use on or about Sept. 7, 1967.

SN 289,586. General Foods Corporation, White Plains, N.Y. Filed Jan. 25, 1968.

DISCOVERY

For Laundry Detergent (Int. Cl. 3).
First use Jan. 5, 1967.

SN 289,587. General Foods Corporation, White Plains, N.Y. Filed Jan. 25, 1968.

SOAR

For Laundry Detergent (Int. Cl. 3).
First use Jan. 5, 1967.

SN 289,589. General Foods Corporation, White Plains, N.Y. Filed Jan. 25, 1968.

PARTNER

For Laundry Detergent (Int. Cl. 3).
First use Jan. 5, 1967.

SN 298,894. Colgate-Palmolive Company, New York, N.Y. Filed May 23, 1968.

SOFTRIL

For Liquid Detergent for Washing Dishes and Fabrics (Int. Cl. 3).
First use Dec. 28, 1967.

SERVICE MARKS

Class 100 — Miscellaneous

SN 261,155. Nathan's Famous, Inc., Coney Island, N.Y. Filed Dec. 20, 1966.

Nathan's

Owner of Reg. Nos. 542,188, 562,087, and 644,517.
For Catering Services (Int. Cl. 42).
First use Jan. 1, 1915.

SN 270,936. Mr. Steak, Inc., Denver, Colo. Filed May 8, 1967.

Mr. Steak

Applicant disclaims the word "Steak" apart from the mark as shown. Owner of Reg. No. 827,025.
For Restaurant Services (Int. Cl. 42).
First use in or about March 1962.

SN 274,536. National Interfraternity Conference, Inc., New York, N.Y. Filed June 22, 1967.

NIC

For College Fraternity Services—Namely, Promoting the Interests of College Fraternities (Int. Cl. 42).
First use during 1936.

SN 274,537. National Interfraternity Conference, Inc., New York, N.Y. Filed June 22, 1967.

NIC Interfraternity

The word "Interfraternity" is disclaimed, apart from the mark as shown.
For College Fraternity Services—Namely, Promoting the Interests of College Fraternities (Int. Cl. 42).
First use during December 1966.

SN 275,054. Inventa, A.G. fur Forschung und Patentverwertung, Zurich, Switzerland. Filed June 29, 1967.

INVENTA

For Research, Planning and Design Services Rendered With Respect to the Construction of Chemical Plants for High-Pressure Synthesis, Organic Intermediates, Fertilizers, Raw Materials for Plastics and Textiles and Synthetic Fibers (Int. Cl. 42).
First use Apr. 17, 1947; in commerce 1950.

SN 282,219. Steak and Ale, Inc., Dallas, Tex. Filed Oct. 10, 1967.

Steak N' Ale

For Restaurant Services (Int. Cl. 42).
First use as early as May 23, 1967.

SN 282,220. Steak and Ale, Inc., Dallas, Tex. Filed Oct. 10, 1967.

Steak and Ale

For Restaurant Services (Int. Cl. 42).
First use as early as Feb. 27, 1966.

SN 282,277. Fast Foods, Incorporated, Houston, Tex. Filed Oct. 11, 1967.

PICKWICK

For Restaurant Services (Int. Cl. 42).
First use Sept. 12, 1967.

SN 290,213. American Scholarship Association, Inc., New York, N.Y. Filed Feb. 5, 1968.

SERVE

For Awarding Scholarships to Students Preparing for Rehabilitation Work (Int. Cl. 42).
First use August 1964.

SN 291,545. Americana Nursing Centers, Inc., Monticello, Ill. Filed Feb. 21, 1968.

Americana Nursing Center

No claim is made to the exclusive right to use the representation of the map of the United States and "Nursing Center" appearing in the design, but the applicant waives none of its common law rights therein. The lining on the drawing is not intended to indicate color. Owner of Reg. No. 790,126.
For Operating Nursing Homes, Convalescent Hospitals, Extended Care Facilities, Health Care Facilities, and the Like, and Consulting Services to Others for the Design and Operation Thereof (Int. Cl. 42).
First use on or about Jan. 7, 1968; on or about Apr. 15, 1961, in a different form.

SN 294,880. Arrington Liggins Dixon, Washington, D.C. Filed Apr. 4, 1968.

MIS

For Advising and Consulting in Data Processing (Int. Cl. 42).
First use Jan. 1, 1968.

SN 295,410. Ready Rent-All Systems Inc., Boston, Mass. Filed Apr. 11, 1968.

For Rental of Tools, Construction Equipment, Party Supplies, Sick Room Equipment, Sporting Equipment, Camping Equipment, Vehicular Trailers, Furniture, and Miscellaneous Consumer and Industrial Rental Articles (Int. Cl. 42).
First use Mar. 28, 1968.

SN 299,068. Hotel Corporation of America, Boston, Mass. Filed May 27, 1968.

BEEF 'N BIRD

Owner of Reg. No. 759,442.
For Restaurant and Bar Services (Int. Cl. 42).
First use July 12, 1961.

Class 101 — Advertising and Business

SN 225,231. Lag Drug Company, Inc., Chicago, Ill. Filed July 28, 1965.

Ui and

For Furnishing Merchandising and Promotional Services to Participating Retail Drug Stores (Int. Cl. 35).
First use June 30, 1964.

SN 245,275. Kepner-Tregoe and Associates, Inc., Princeton, N.J. Filed May 10, 1966.

KEPNER TREGOE

For Management Research, Consultation, and Development Services (Int. Cl. 35).
First use in or about June 1958.

SN 245,611. Pet Ranches of America, Inc., St. Louis, Mo. Filed May 13, 1966.

PET RANCHES

No claim is made to the word "Pet" apart from the mark as shown.
For Rendering Technical Assistance to Owners of Retail Stores Selling Pets and Pet Supplies, Such Assistance embracing All Phases of This Business (Int. Cl. 35).
First use on or about Oct. 15, 1965.

SN 251,897. Columbia Broadcasting System, Inc., New York, N.Y. Filed Aug. 8, 1966.

DIAL-A-STATION

For Representing Independent Radio Broadcasting Stations in the Sale of Radio Time, Talent, and Program Materials (Int. Cl. 35).
First use Sept. 4, 1963.

SN 274,420. Robert S. Edwards, Jr., d.b.a., Microlog Information Systems, Ann Arbor, Mich. Filed June 21, 1967.

MICROLOG

For Supplying Clients in the Construction Industry on a Continuing Basis, Microfilmed Catalog and Price Information, Such as Information of This Nature From Every Major Manufacturer of Electrical Equipment (Int. Cl. 35).
First use Apr. 20, 1967.

SN 280,002. American Products Agency, Inc., Beverly Hills, Calif. Filed Sept. 11, 1967.

Applicant disclaims the representation of the globe, apart from the mark as shown.
For Exporting and Marketing Goods of Others (Int. Cl 35).
First use Aug. 10, 1964.

SN 285,867. Thorofare Markets Inc., Murrysville, Pa. Filed Nov. 29, 1967.

THOROFARE

Owner of Reg. Nos. 810,516 and 816,547.
For Retail Grocery Store Services (Int. Cl. 35).
First use 1942.

SN 285,873. Jacoby & Company, Detroit, Mich. Filed Oct. 30, 1967.

FLAME KISSED

For Design and Formulation of Advertising Material To Be Used by Public Utility Companies on a Contract Basis in Advertising Their Services (Int. Cl. 35).
First use June 1, 1965.

SN 286,169. Pacesetter East, Inc., Milford, Conn. Filed Dec. 4, 1967.

PACESETTER EAST

For Retail Clothing Store Services (Int. Cl. 35).
First use January 1966.

SN 289,062. Spencer Gifts, Inc., Atlantic City, N.J. Filed Jan. 18, 1968.

SPENCER GIFTS

The word "Gifts" is disclaimed apart from the mark as shown.
Owner of Reg. No. 832,689.
For Retail Gift Shop Services (Int. Cl. 35).
First use November 1963.

SN 290,219. Consolidated Foods Corporation, Chicago, Ill. Filed Feb. 5, 1968.

CARDINAL FOOD STORES

Applicant disclaims the words "Food Stores" apart from the mark as shown.
For Promoting the Business of Retail Grocers and Retail Grocery Store Services (Int. Cl. 35).
First use July 15, 1948.

SN 295,706. Melville Shoe Corporation, New York, N.Y. Filed Apr. 16, 1968.

MELDISCO

For Operation of Shoe and Accessory Departments in Retail and Chain Stores (Int. Cl. 35).
First use Nov. 16, 1959.

Class 102 — Insurance and Financial

SN 268,949. Farmers Cooperative Mutual Insurance Association, Minneapolis, Minn. Filed Apr. 12, 1967.

ECONOCROP

For Insuring Crops Against Damage by Hail (Int. Cl. 36).
First use Dec. 1, 1966.

SN 284,812. Georgia International Life Insurance Company, Atlanta, Ga. Filed Nov. 14, 1967.

The mark consists of the letters "CC" and a globe design.
Owner of Reg. No. 847,765.
For Insurance Underwriting Services (Int. Cl. 36).
First use Oct. 16, 1967; Nov. 16, 1965, in a different form.

SN 286,314. American Express Company, New York, N.Y. Filed Dec. 6, 1967.

EXPRESS CHEQUES

Applicant disclaims the word "Cheques" apart from the mark as shown.
For Travelers Cheque Services—Namely, the Issuance and Redemption of Travelers Cheques (Int. Cl. 36).
First use at least as early as Dec. 30, 1891.

Class 103 — Construction and Repair

SN 276,047. Sunkist Pools, Inc., Union City, Calif. Filed July 14, 1967.

SUNKIST POOLS

No registration rights are claimed for the word "Pools" apart from the mark as shown.
For Construction of Swimming Pools (Int. Cl. 37).
First use at least as early as Feb. 15, 1967.

SN 277,722. Sunkist Pools, Inc., Union City, Calif. Filed Aug. 7, 1967.

sunkist pools

No registration rights are claimed for the word "Pools" apart from the mark as shown.
For Construction of Swimming Pools (Int. Cl. 37).
First use at least as early as Feb. 15, 1967.

SN 287,709. Aamco Automatic Transmissions, Inc., King of Prussia, Pa. Filed Dec. 28, 1967.

AAMCO

Owner of Reg. No. 803,605.
For Automobile Repair Services (Int. Cl. 37).
First use on or about May 7, 1964.

Class 104 — Communication

SN 240,224. The Western Union Telegraph Company, New York, N.Y. Filed Mar. 4, 1966.

western union

The drawing is lined for the color yellow.
For Communication Services—Namely, Telex Services, Telegraphic Services, and Computerized Data Transmission Services (Int. Cl. 38).
First use on or about Dec. 20, 1965.

SN 284,149. Baker Industries, Inc., Newark, N.J. Filed Nov. 6, 1967.

Wells Fargo

Owner of Reg. Nos. 708,531 and 708,532.
For Central Station Protective Services Employing Communications to Monitoring Personnel (Int. Cl. 38).
First use Oct. 31, 1967.

SN 284,151. Baker Industries, Inc., Newark, N.J. Filed Nov. 6, 1967.

WELLS FARGO

Owner of Reg. Nos. 708,531 and 708,532.
For Central Station Protective Services Employing Communications to Monitoring Personnel (Int. Cl. 38).
First use Oct. 31, 1967.

Class 106 — Material Treatment

SN 288,425. Cold Spring Bleachery, Yardley, Pa. Filed Jan. 9, 1968.

Dela-Kleen

Owner of Reg. Nos. 575,284, 794,208, and others.
For Soil Release Finishing for Fabrics of Others (Int. Cl. 40).
First use May 15, 1967.

Class 107 — Education and Entertainment

SN 243,882. Ladies of Loretto, Chicago, Ill. Filed Apr. 20, 1966.

LEAP

For Providing Basic Adult Education With Related Testing and Curriculum Development (Int. Cl. 41).
First use on or prior to Jan. 4, 1965.

SN 266,002. Copinvest A.G. Zug, Switzerland. Filed Mar. 6, 1967.

REINA CHRISTINA

The word "Reina" means "queen" in Spanish. Owner of U.S. Reg. No. 827,179.
For Conducting Courses for Self-Improvement, Beauty and Charm for Women (Int. Cl. 41).
First use at least as early as Jan. 2, 1966; in commerce at least as early as Jan. 2, 1966.

COLLECTIVE MEMBERSHIP MARKS

Class 200

SN 281,832. Theta Phi Alpha Fraternity, Cincinnati, Ohio. Filed Oct. 4, 1967.

The mark consists of a monogram design comprising the Greek letters "Theta, Phi, Alpha."
For Indicating Membership in Applicant.
First use on or about Aug. 30, 1912.

TRADEMARK REGISTRATIONS ISSUED
PRINCIPAL REGISTER

Class 1 — Raw or Partly Prepared Materials

855,345. POLYMARBLE. SCM Corporation, assignee of The Glidden Company. SN 257,181. Pub. 6-11-68. Filed 10-25-66.

855,346. SAN LORENZO AND DESIGN. San Lorenzo Nursery Company. SN 262,443. Pub. 6-11-68. Filed 1-12-67.

855,347. SUCROSSE. George Warner Seed Company, Inc. SN 263,715. Pub. 6-11-68. Filed 1-31-67.

855,348. FIDION AND DESIGN. ANIC Societa per Azioni. MULTIPLE CLASS (Classes 1, 39, 42, and 43). SN 268,687. Pub. 6-11-68. Filed 4-10-67.

855,349. CYGLAZE. American Cyanamid Company. SN 273,458. Pub. 6-11-68. Filed 6-9-67.

855,350. CONFORM. Interchemical Corporation. SN 274,522. Pub. 6-11-68. Filed 6-22-67.

855,351. RAYBULK. Rayonier Incorporated. SN 276,691. Pub. 6-11-68. Filed 7-24-67.

855,352. BLACKHAWK. Ottawa Silica Company. SN 276,855. Pub. 6-11-68. Filed 7-26-67.

855,353. BPB. M. J. Fassler & Co., Inc. SN 284,788. Pub. 6-11-68. Filed 11-14-67.

855,354. 3M. Minnesota Mining and Manufacturing Company. MULTIPLE CLASS (Classes 1 and 43). SN 289,750. Pub. 6-11-68. Filed 1-29-68.

855,355. PLUTON. Minnesota Mining and Manufacturing Company. MULTIPLE CLASS (Classes 1 and 43). SN 289,751. Pub. 6-11-68. Filed 1-29-68.

855,356. WEATHERBRIGHT. Dow Badische Company. SN 291,367. Pub. 6-11-68. Filed 2-19-68.

Class 2 — Receptacles

855,357. BAG-WRAP. Lion Packaging Products Co., Inc. SN 242,137. Pub. 6-11-68. Filed 3-29-66.

855,358. SNO-KONE. Gold Medal Products Co. MULTIPLE CLASS (Classes 2, 23, 26, 31, 39, 46, and 50). SN 242,589. Pub. 6-11-68. Filed 4-4-66.

855,359. FILTRA-MATIC. J & T Horlan Company Inc. SN 274,628. Pub. 6-11-68. Filed 6-23-67.

855,360. EXPAND-O-MATIC. J & T Horlan Company Inc. SN 274,629. Pub. 6-11-68. Filed 6-23-67.

855,361. POLORON. Poloron Products, Inc. SN 276,860. Pub. 5-21-68. Filed 7-26-67.

855,362. NUTRI-MATIC. Martin Marietta Corporation. SN 280,321. Pub. 6-11-68. Filed 9-14-67.

855,363. T-D-M. Vistron Corporation. SN 280,992. Pub. 6-11-68. Filed 9-21-67.

855,364. LOMA. Vistron Corporation. SN 281,332. Pub. 6-11-68. Filed 9-27-67.

855,365. CONTAINERVAC. Container Corporation of America. SN 285,909. Pub. 6-11-68. Filed 11-30-67.

855,366. DESIGN OF LEAF IN A BOX. Container Corporation of America. SN 286,101. Pub. 6-11-68. Filed 12-4-67.

Class 3 — Baggage, Animal Equipments, Portfolios, and Pocketbooks

855,367. MONKEES AND DESIGN. Screen Gems, Inc. MULTIPLE CLASS (Classes 3, 22, 36, 37, 38, 39, and 46). SN 261,416. Pub. 6-11-68. Filed 12-27-66.

855,368. JACLYN-ETTE. Aetna Leather Novelty Co., Inc. SN 280,848. Pub. 6-11-68. Filed 9-21-67.

855,369. MODERN MISS AND DESIGN. Sealatron Corporation. SN 280,887. Pub. 6-11-68. Filed 9-21-67.

855,370. CARETAKER. St. Thomas, Incorporated. SN 280,892. Pub. 6-11-68. Filed 9-21-67.

Class 5 — Adhesives

855,371. GLIDDEN IN OVAL DESIGN. SCM Corporation, assignee of The Glidden Company. SN 250,477. Pub. 6-11-68. Filed 7-18-66.

855,372. BORDEN'S. The Borden Company. SN 278,084. Pub. 6-11-68. Filed 8-11-67.

Class 6 — Chemicals and Chemical Compositions

855,373. BASIC R AND DESIGN. American Basic Chemicals, Inc. SN 230,594. Pub. 6-11-68. Filed 10-20-65.

855,374. ODER-CHEK. Watkins Products, Inc. SN 274,473. Pub. 6-11-68. Filed 6-21-67.

855,375. AQUA-RID. Reichhold Chemicals, Inc. SN 280,094. Pub. 6-11-68. Filed 9-11-67.

855,376. TANGY. Stanley Home Products, Inc. SN 280,477. Pub. 6-11-68. Filed 9-15-67.

855,377. STANNOSTAR. The Udylite Corporation. SN 280,653. Pub. 6-11-68. Filed 9-18-67.

855,378. KATALCO. Katalco Corporation. SN 280,784. Pub. 6-11-68. Filed 9-20-67.

855,379. TOP FORM. Merck & Co., Inc. SN 280,806. Pub. 6-11-68. Filed 9-20-67.

855,380. ALFONIC. Continental Oil Company. SN 280,856. Pub. 6-11-68. Filed 9-21-67.

855,381. D-D-S. Donald T. Duke, d.b.a. Duke Laboratories. SN 281,048. Pub. 6-11-68. Filed 9-25-67.

855,382. WESTERN SHORES. Western Family Foods, Inc. MULTIPLE CLASS (Classes 6 and 52). SN 288,755. Pub. 6-11-68. Filed 1-15-68.

855,383. PERMAX. The C. B. Dolge Company. SN 293,078. Pub. 6-11-68. Filed 3-13-68.

Class 7 — Cordage

855,384. GILT EDGE. Central Soya Company, Inc. SN 274,588. Pub. 6-11-68. Filed 6-23-67.

855,385. TRIPLE-"T." N.V. Lankhorst Touwfabrieken. SN 277,689. Pub. 6-11-68. Filed 8-7-67.

855,386. ARLINGTON. Puritan Cordage Mills. SN 278,241. Pub. 6-11-68. Filed 8-14-67.

855,387. SUNSHINE. Lion Ribbon Company, Inc. SN 281,154. Pub. 6-11-68. Filed 9-8-67.

Class 8 — Smokers' Articles, Not Including Tobacco Products

855,388. DORY. S. Brandt Imports, Inc. SN 263,610. Pub. 6-11-68. Filed 1-30-67.

855,389. ROVER. Ronson Corporation. SN 289,856. Pub. 6–11–68. Filed 1–12–68.

Class 10 — Fertilizers

855,390. H.A.D. Humic Acid Products, Inc. SN 272,727. Pub. 6–11–68. Filed 5–31–67.

855,391. MARCO POLY-PHOS. Marco Chemicals, Inc. SN 274,879. Pub. 6–11–68. Filed 6–27–67.

Class 12 — Construction Materials

855,392. AQUA-GUARD. Jones Shutter Products, Inc. SN 261,500. Pub. 6–11–68. Filed 12–27–66.

855,393. MAGRODOME. MacGregor-Comarain. SN 263,928. Pub. 6–11–68. Filed 2–3–67.

855,394. PANDURA. Jan Industries, Inc., assignee of The Glidden Company. SN 265,303. Pub. 5–21–68. Filed 2–23–67.

855,395. BIEDURAL. Heinrich Biehl. SN 267,278. Pub. 6–11–68. Filed 3–21–67.

855,396. REVOLVOMATIC AND DESIGN. International Steel Company. SN 267,433. Pub. 6–11–68. Filed 3–23–67.

855,397. VINYL IS FINAL. Mastic Corporation. SN 268,207. Pub. 6–11–68. Filed 4–3–67.

855,398. PANDURA AND DESIGN. Jan Industries, Inc., assignee of The Glidden Company. SN 273,956. Pub. 5–21–68. Filed 6–15–67.

855,399. TERROXY. Construction Chemicals, Inc. SN 277,633. Pub. 6–11–68. Filed 8–7–67.

855,400. MICRO-MATTE. Amplex Manufacturing Company. SN 278,776. Pub. 6–11–68. Filed 8–22–67.

855,401. KIRBY KLAMP. R. J. Kirby Company. SN 279,302. Pub. 6–11–68. Filed 8–29–67.

855,402. ESB AND DESIGN. ESB Incorporated. MULTIPLE CLASS (Classes 12 and 13). SN 286,968. Pub. 6–11–68. Filed 12–15–67.

855,403. GALV-PLUS. Cyclops Corporation. SN 287,807. Pub. 6–11–68. Filed 12–29–67.

Class 13 — Hardware and Plumbing and Steam-Fitting Supplies

855,402. (See Class 12 for this trademark.)

855,404. PH AND DESIGN. Parker-Hannifin Corporation. MULTIPLE CLASS (Classes 13, 14, 23, 31, and 35). SN 241,797. Pub. 6–11–68. Filed 3–24–66.

855,405. FURNI-GLYDE. Swish Products Limited. SN 260,303. Pub. 6–11–68. Filed 9–30–66.

855,406. L5. The Lamson & Sessions Co. SN 263,587. Pub. 6–11–68. Filed 1–30–67.

855,407. SOLMATIC. Charles Ayme de la Chevreliere. SN 264,026. Pub. 6–11–68. Filed 2–6–67.

855,408. VIBRA-CONE. Vents, Inc. SN 264,697. Pub. 6–11–68. Filed 2–14–67.

855,409. HY-STY-LON. Kainer Wesco Corporation. SN 266,891. Pub. 6–11–68. Filed 3–16–67.

855,410. FIRE-GARD. Clayton Mark & Company. SN 269,739. Pub. 6–11–68. Filed 4–21–67.

855,411. BRASSCO WHISPER. National Distillers and Chemical Corporation, assignee of Bridgeport Brass Company. SN 270,472. Pub. 6–11–68. Filed 5–2–67.

855,412. NO-HOLE. Warren Fastener Corporation. SN 270,829. Pub. 6–11–68. Filed 5–5–67.

855,413. AMCO AND DESIGN. Amco Wire Products Corp. SN 271,418. Pub. 6–11–68. Filed 5–15–67.

855,414. STOP AND DESIGN. Jacuzzi Bros., Incorporated. SN 271,483. Pub. 6–11–68. Filed 5–15–67.

855,415. COMFORT SHADE. J. P. Stevens & Co., Inc. SN 271,854. Pub. 6–11–68. Filed 5–18–67.

855,416. FASTWAY. Fast Way Fasteners, Inc. SN 293,665. Pub. 6–11–68. Filed 3–20–68.

Class 14 — Metals and Metal Castings and Forgings

855,404. (See Class 13 for this trademark.)

855,417. X-100. Pennsylvania Steel Corporation. SN 279,678. Pub. 6–11–68. Filed 9–5–67.

855,418. PLYFOIL. Reynolds Metals Company. SN 283,574. Pub. 6–11–68. Filed 10–27–67.

855,419. PERFALLOY. Wilson Welding Alloys, Inc. SN 286,862. Pub. 6–11–68. Filed 12–13–67.

Class 15 — Oils and Greases

855,420. ILC ETC. AND DESIGN. International Lubricant Corporation. SN 247,603. Pub. 6–11–68. Filed 6–8–66.

855,421. DINOHEAT. Sinclair Refining Company. MULTIPLE CLASS (Classes 15 and 34). SN 277,098. Pub. 6–11–68. Filed 7–31–67.

855,422. FAIRY. Candle-Lite, Inc. SN 283,092. Pub. 6–11–68. Filed 10–23–67.

855,423. HESS AND DESIGN. Hess Oil & Chemical Corporation. SN 287,819. Pub. 6–11–68. Filed 12–29–67.

Class 16 — Protective and Decorative Coatings

855,424. DUB-L-SEAL. Dub-L-Kleen Chemical Corporation. SN 265,499. Pub. 6–11–68. Filed 2–27–67.

855,425. PHOSBLACK. MacDermid Incorporated. SN 285,240. Pub. 6–11–68. Filed 11–20–67.

Class 17 — Tobacco Products

855,426. VAN LANDEWYCK'S LUXEMBOURG. P. Lorillard Company. SN 238,358. Pub. 6–11–68. Filed 2–8–66.

855,427. CANCER. Stanley E. Hartman, d.b.a. Pacific Tobacco Company. SN 261,842. Pub. 6–11–68. Filed 1–3–67.

855,428. COURTLEIGH AND DESIGN. St. Regis Tobacco Corporation Limited. SN 267,185. Pub. 6–11–68. Filed 3–20–67.

855,429. WAIKIKI. Larus & Brother Company. SN 293,629. Pub. 6–11–68. Filed 3–19–68.

855,430. MODERATOR. Philip Morris Incorporated. SN 293,672. Pub. 6–11–68. Filed 3–20–68.

Class 18 — Medicines and Pharmaceutical Preparations

855,431. RICOLA AND DESIGN. Richterich & Cie, Confiseriefabrik, d.b.a. Richterich & Co. MULTIPLE CLASS (Classes 18 and 46). SN 269,820. Pub. 6–11–68. Filed 4–24–67.

855,432. S/M. Fleming Laboratories Incorporated. SN 270,666. Pub. 6–11–68. Filed 5–4–67.

855,433. CEBID. Winston Pharmaceuticals, Incorporated. SN 273,145. Pub. 6–11–68. Filed 6–5–67.

855,434. SOAKATOR. Allergan Pharmaceuticals. SN 274,925. Pub. 6–11–68. Filed 6–28–67.

855,435. WAKOZ. The Jeffrey Martin Company. SN 274,972. Pub. 6–11–68. Filed 6–28–67.

855,436. ANESTACON. Conal Pharmaceuticals, Inc. SN 275,514. Pub. 6–11–68. Filed 7–7–67.

855,437. FP-BLEN. Abbott Laboratories. SN 275,593. Pub. 6–11–68. Filed 7–10–67.

855,438. OCU-TACT. Commerce Drug Co., Inc. SN 275,636. Pub. 6–11–68. Filed 7–10–67.

855,439. OCU-DROP. Commerce Drug Co., Inc. SN 275,637. Pub. 6–11–68. Filed 7–10–67.

855,440. JUST NICE. Carter-Wallace, Inc. SN 292,738. Pub. 6–11–68. Filed 3–8–68.

Class 19 — Vehicles

855,441. AM. American Motors Corporation. SN 230,348. Pub. 9–12–67. Filed 10–18–65.

855,442. TEAR DROP AND DESIGN. All Star Coach, Inc. SN 262,870. Pub. 6–11–68. Filed 1–9–67.

855,443. SEGIC. Gulterman Company, Inc. MULTIPLE CLASS (Classes 19, 21, and 23). SN 266,823. Pub. 6–11–68. Filed 3–16–67.

855,444. HYDRAULIC EJECT-ALL K.C. MO. AND DESIGN. Hardwick Manufacturing Co., Inc. SN 270,383. Pub. 6–11–68. Filed 5–1–67.

855,445. HIDE-A-WAY-EYE-GUARD. Hide-A-Way Jax, Inc. SN 271,471. Pub. 6–11–68. Filed 5–15–67.

855,446. DYNAFLYTE AND DESIGN. Coilform Company. SN 274,958. Pub. 6–11–68. Filed 6–28–67.

855,447. PLEASURE MATE. Pleasure Time Industry. SN 277,705. Pub. 6–11–68. Filed 8–7–67.

855,448. HUCK FINN. Mark Twain Marine Industries, Inc. SN 278,508. Pub. 6–11–68. Filed 8–17–67.

855,449. DESERTER. Dearborn Automobile Company, Inc. SN 278,582. Pub. 6–11–68. Filed 8–18–67.

855,450. DESIGN OF A MAN. Portland Wire and Iron Works. SN 278,819. Pub. 6–11–68. Filed 8–22–67.

855,451. WILLIAMS CRAFT AND DESIGN. Williams Manufacturing Co., Inc. SN 282,157. Pub. 6–11–68. Filed 10–9–67.

855,452. CENTRIFUGAL LOCK. American Racing Equipment. SN 282,524. Pub. 6–11–68. Filed 10–16–67.

855,453. HOPPER TOPPER AND DESIGN. A. O. Smith Corporation. SN 284,052. Pub. 6–11–68. Filed 11–2–67.

855,454. PLICOR AND DESIGN. Tollycraft Corporation. SN 284,515. Pub. 6–11–68. Filed 11–9–67.

855,455. MISCELLANEOUS DESIGN. Tollycraft Corporation. SN 284,516. Pub. 6–11–68. Filed 11–9–67.

855,456. TOLLYCRAFT. Tollycraft Corporation. SN 284,517. Pub. 6–11–68. Filed 11–9–67.

Class 21 — Electrical Apparatus, Machines, and Supplies

855,443. (See Class 19 for this trademark.)

855,457. S AND DESIGN. Servotronics, Inc. SN 225,072. Pub. 6–11–68. Filed 8–5–65.

855,458. STIHL. Andreas Stihl Machinenfabrik. MULTIPLE CLASS (Classes 21 and 23). SN 234,718. Pub. 6–11–68. Filed 12–16–65.

855,459. BILTMORE. J. J. Newberry Co. SN 250,391. Pub. 6–11–68. Filed 7–15–66.

855,460. M/SA AND DESIGN. Alloys Unlimited, Inc., assignee of Micro Science Associates. SN 256,460. Pub. 6–11–68. Filed 10–14–66.

855,461. NOK-IN. Fred S. Boyer, d.b.a. Boyer Products Co. SN 260,011. Pub. 6–11–68. Filed 12–5–66.

855,462. CALMOUNT. Myron J. Zucker, d.b.a. Myron Zucker Engineering Co. SN 264,630. Pub. 6–11–68. Filed 2–13–67.

855,463. CAPACIBANK. Myron J. Zucker, d.b.a. Myron Zucker Engineering Co. SN 264,631. Pub. 6–11–68. Filed 2–13–67.

855,464. INTERMATIC. International Register Company. MULTIPLE CLASS (Classes 21, 26, and 27). SN 266,822. Pub. 6–11–68. Filed 3–16–67.

855,465. SELMER. H. & A. Selmer, Inc. SN 267,523. Pub. 6–11–68. Filed 3–24–67.

855,466. GIBRALTAR. Jerrold Electronics Corporation. SN 268,192. Pub. 6–11–68. Filed 4–3–67.

855,467. NEUTRO-VAC. The Simco Company, Inc. SN 268,899. Pub. 6–11–68. Filed 4–11–67.

855,468. TRAVELITER. Packaged Lighting Services, Inc. SN 273,303. Pub. 6–11–68. Filed 6–7–67.

855,469. BBQ-LITES. Packaged Lighting Services, Inc. SN 273,304. Pub. 6–11–68. Filed 6–7–67.

855,470. BALDWIN. D. H. Baldwin Company. MULTIPLE CLASS (Classes 21 and 36). SN 274,130. Pub. 6–11–68. Filed 6–19–67.

855,471. SIDE-GUARD. Design Progress Inc. SN 274,194. Pub. 6–11–68. Filed 6–19–67.

855,472. HOLYOKE. Holyoke Wire and Cable Corporation. SN 274,321. Pub. 6–11–68. Filed 6–20–67.

855,473. GRACOM AND DESIGN. Gracom Industries, Inc. SN 277,165. Pub. 6–11–68. Filed 7–31–67.

855,474. TELEPHONE VALET. Industrial Suppliers Company. SN 277,177. Pub. 6–11–68. Filed 7–31–67.

855,475. POWR-SPOT. General Electric Company. SN 277,357. Pub. 6–11–68. Filed 8–2–67.

855,476. EXTEND-A-PHONE. Fedtro, Inc. SN 278,292. Pub. 6–11–68. Filed 8–15–67.

855,477. THRUST AND DESIGN. Thrust Electronics, Inc. SN 278,749. Pub. 6–11–68. Filed 8–21–67.

855,478. CENTRAX. Centrax Limited. MULTIPLE CLASS (Classes 21 and 23). SN 279,431. Pub. 6–11–68. Filed 8–31–67.

855,479. EMERSON AND CLEF DESIGN. National Union Electric Corporation. SN 281,385. Pub. 6–11–68. Filed 9–28–67.

855,480. CVC (DESIGN). Constant Voltage Corp. SN 289,229. Pub. 6–11–68. Filed 5–25–67.

855,481. SEALECTROBOARD. Sealectro Corporation. SN 292,864. Pub. 6–11–68. Filed 3–11–68.

Class 22 — Games, Toys, and Sporting Goods

855,367. (See Class 3 for this trademark.)

855,482. MARK. Victor Comptometer Corporation, assignee of James Heddon's Sons. SN 260,550. Pub. 4–30–68. Filed 12–12–66.

855,483. FOOTBALL STARS IN ACTION. Paul A. Price Co., Inc. SN 266,687. Pub. 6–11–68. Filed 3–14–67.

855,484. S (DESIGN). Sports Industries, Inc. MULTIPLE CLASS (Classes 22 and 26). SN 267,553. Pub. 6–11–68. Filed 3–24–67.

855,485. FUNTRONICS. The Electric Game Company. SN 279,057. Pub. 6–11–68. Filed 8–25–67.

855,486. FLITE 330 AND DESIGN. Harold J. Searer, d.b.a. Searer Rubber Company. SN 284,400. Pub. 6–11–68. Filed 11–8–67.

855,487. PATCH THE PONY ETC. AND DESIGN. Patch the Pony, Inc., assignee of Margaret H. Liles. SN 285,497. Pub. 6–11–68. Filed 11–24–67.

855,488. GREAT WOOD FLEET. American Seating Company. SN 285,709. Pub. 6–11–68. Filed 11–28–67.

855,489. LITTLE PROFIT. Leon Shaffer Golnick Advertising, Inc. SN 286,127. Pub. 6–11–68. Filed 12–4–67.

855,490. AWARD. A. G. Spalding & Bros. Inc. SN 286,451. Pub. 6–11–68. Filed 12–7–67.

855,491. REGAL. Uniroyal, Inc. SN 287,050. Pub. 6–11–68. Filed 12–15–67.

855,492. SNUGPACK. W. J. Voit Rubber Corp. SN 287,607. Pub. 6-11-68. Filed 12-26-67.

855,493. STAN PAK AND DESIGN. Standard Packaging Corporation. SN 288,375. Pub. 6-11-68. Filed 1-8-68.

Class 23 — Cutlery, Machinery, and Tools, and Parts Thereof

855,358. (See Class 2 for this trademark.)

855,404. (See Class 13 for this trademark.)

855,443. (See Class 19 for this trademark.)

855,458. (See Class 21 for this trademark.)

855,478. (See Class 21 for this trademark.)

855,494. HIC. Osaka Bearing Mfg. Co., Ltd. SN 232,584. Pub. 6-11-68. Filed 11-12-65.

855,495. HANDYWASH AND DESIGN. The John E. Mitchell Company, Inc. SN 243,466. Pub. 6-11-68. Filed 4-14-66.

855,496. PERMA. Perma Sharp Manufacturing Corp. SN 249,249. Pub. 6-11-68. Filed 6-29-66.

855,497. DREMEL. Dremel Manufacturing Company. SN 252,833. Pub. 6-11-68. Filed 8-22-66.

855,498. PRESSURE-PAC. Pressure Pac Company. SN 252,888. Pub. 6-11-68. Filed 8-22-66.

855,499. MISCELLANEOUS DESIGN. United Engineering and Foundry Company. SN 254,359. Pub. 6-11-68. Filed 9-13-66.

855,500. BURGESS AND DESIGN. Burgess Vibrocrafters, Inc. SN 257,162. Pub. 6-11-68. Filed 10-25-66.

855,501. TRI MATIC. Shimano Kogyo Kabushiki Kaisha. SN 258,598. Pub. 6-11-68. Filed 11-14-66.

855,502. DEMARKUS. Louis Demarkus Corporation. SN 259,305. Pub. 6-11-68. Filed 11-23-66.

855,503. DEM AND DESIGN. Louis Demarkus Corporation. SN 259,306. Pub. 6-11-68. Filed 11-23-66.

855,504. DAVEBILT. Clarence O. Davidson. SN 261,283. Pub. 6-11-68. Filed 12-22-66.

855,505. FEEDSTER. Zero-Max Industries, Inc. SN 262,530. Pub. 6-11-68. Filed 1-13-67.

855,506. MAN MATION. Thomson Industries, Inc. SN 262,722. Pub. 6-11-68. Filed 1-17-67.

855,507. THE GRIFFIN WELLPOINT SYSTEMS INSURES PROTECTION AND DESIGN. Griffin Wellpoint Corporation. SN 263,374. Pub. 6-11-68. Filed 1-26-67.

855,508. FIRE-DISH. Arthur W. Alexander and Elsie M. Alexander (joint owners), d.b.a. Crank Shaft Co. SN 264,005. Pub. 6-11-68. Filed 2-6-67.

855,509. SCHNEEBERGER AND DESIGN. W. Schneeberger AG. SN 268,247. Pub. 6-11-68. Filed 4-3-67.

855,510. TERRCO. Terrazzo Machine & Supply Company, Inc. SN 270,299. Pub. 6-11-68. Filed 4-28-67.

855,511. PERFECT. True Temper Corporation. SN 270,983. Pub. 6-11-68. Filed 5-8-67.

855,512. "BIG-T-VAC." Tarrant Manufacturing Company. SN 272,523. Pub. 6-11-68. Filed 5-26-67.

855,513. TOUCH-TITE. Chicago Pneumatic Tool Company. SN 275,431. Pub. 6-11-68. Filed 7-6-67.

855,514. LTR. Barrett-Cravens Company. SN 276,213. Pub. 6-11-68. Filed 7-18-67.

855,515. MOBILEER. The Greater Iowa Corporation, assignee of Side-O-Matic Unloader Corporation. SN 276,361. Pub. 6-11-68. Filed 7-19-67.

855,516. S (DESIGN). Sundstrand Corporation. SN 277,084. Pub. 6-11-68. Filed 7-28-67.

855,517. 606. Phillips Drill Company. SN 277,471. Pub. 6-11-68. Filed 8-3-67.

855,518. BRUCKNER AND DESIGN. Brückner-Trockentechnik KG. SN 277,880. Pub. 6-11-68. Filed 8-9-67.

855,519. SPINSLICER. Spinslicer Company. SN 279,573. Pub. 6-11-68. Filed 9-1-67.

855,520. GRAVERMEISTER. GRS Corporation. SN 279,638. Pub. 6-11-68. Filed 9-5-67.

855,521. RECIPROMATIC. Oliver Instrument Company. SN 279,850. Pub. 6-11-68. Filed 9-7-67.

855,522. ADJUST-O-CUT. McGraw-Edison Company. SN 280,083. Pub. 6-11-68. Filed 9-11-67.

855,523. TIGAR JET. Vicjet, Inc. SN 283,476. Pub. 6-11-68. Filed 10-26-67.

855,524. OFFY. Drake Engineering & Sales Corp. SN 283,600. Pub. 6-11-68. Filed 10-30-67.

855,525. WESTBROOK ELEVATORS. Westbrook Elevator Manufacturing Co., Incorporated. SN 287,776. Pub. 6-11-68. Filed 12-6-67.

855,526. KRONA CHROME. Eversharp, Inc. SN 288,909. Pub. 6-11-68. Filed 1-16-68.

855,527. YOUNG BLADE. Eversharp, Inc. SN 292,155. Pub. 6-11-68. Filed 2-29-68.

855,528. KOEBAU RAPIDA. Schnellpressenfabrik Koenig & Bauer Aktiengesellschaft. SN 292,455. Pub. 6-11-68. Filed 3-5-68.

Class 24 — Laundry Appliances and Machines

855,529. CARD-O-MATIC. McGraw-Edison Company. SN 280,081. Pub. 6-11-68. Filed 9-11-67.

855,530. POLARIS 101. New York Pressing Machinery Corporation. SN 281,310. Pub. 6-11-68. Filed 9-27-67.

855,531. THE TUMBLER. Whitehouse Products, Inc. SN 282,150. Pub. 6-11-68. Filed 10-9-67.

Class 26 — Measuring and Scientific Appliances

855,358. (See Class 2 for this trademark.)

855,464. (See Class 21 for this trademark.)

855,484. (See Class 22 for this trademark.)

855,532. DELTA-CORDER. Delta-Corders, Inc. SN 241,439. Pub. 6-11-68. Filed 3-21-66.

855,533. MEDELCO. Medelco, Incorporated. SN 247,822. Pub. 6-11-68. Filed 6-10-66.

855,534. WEATHER-MATE. General Time Corporation. SN 253,306. Pub. 6-11-68. Filed 8-29-66.

855,535. SURTRONIC. Rank Organisation Limited. SN 264,962. Pub. 6-11-68. Filed 2-17-67.

855,536. MASCOT. Bell & Howell Company. SN 268,356. Pub. 6-11-68. Filed 4-5-67.

855,537. BENCH-PAK. Ipco Hospital Supply Corporation. SN 273,069. Pub. 6-11-68. Filed 6-5-67.

855,538. NES AND DESIGN. National Electronic Systems, Inc. SN 275,451. Pub. 6-11-68. Filed 7-6-67.

855,539. TRIG-AIDE. Brooks Manufacturing Company. SN 276,407. Pub. 6-11-68. Filed 7-20-67.

855,540. FIBROTUBE. B-D Laboratories, Inc. SN 282,348. Pub. 6-11-68. Filed 10-12-67.

855,541. STING-RAY. Schwinn Bicycle Company. SN 282,398. Pub. 6-11-68. Filed 10-12-67.

855,542. VISONIC. Xicom Incorporated. SN 285,980. Pub. 6-11-68. Filed 12-1-67.

Class 27 — Horological Instruments

855,464. (See Class 21 for this trademark.)

855,543. JAZISTOR. JAZ S.A. SN 277,914. Pub. 6-11-68. Filed 8-9-67.

Class 28 — Jewelry and Precious-Metal Ware

855,544. MEDITERRANEA. Oneida Ltd. SN 271,282. Pub. 6-11-68. Filed 5-11-67.

Class 29 — Brooms, Brushes, and Dusters

855,545. LINTERBALL. Laverle F. James. SN 268,602. Pub. 6-11-68. Filed 4-7-67.

855,546. HEY KIDS. I. Sekine Company, Inc. SN 278,734. Pub. 6-11-68. Filed 8-21-67.

855,547. NIFTEE. Nif-Tee Distributing Limited. SN 282,601. Pub. 6-11-68. Filed 10-16-67.

Class 31 — Filters and Refrigerators

855,358. (See Class 2 for this trademark.)

855,404. (See Class 13 for this trademark.)

855,548. MILLITUBE. Millipore Corporation. SN 270,258. Pub. 6-11-68. Filed 4-28-67.

Class 32 — Furniture and Upholstery

855,549. THE DRESDEN COLLECTION AND DESIGN. Trend Line, Inc. SN 262,896. Pub. 6-11-68. Filed 1-19-67.

Class 34 — Heating, Lighting, and Ventilating Apparatus

855,421. (See Class 15 for this trademark.)

855,550. UNI-WALL. Murray Iron Works Company. SN 259,332. Pub. 6-11-68. Filed 11-23-66.

855,551. LO-SONE. Broan Mfg. Co., Inc. SN 263,251. Pub. 6-11-68. Filed 1-25-67.

855,552. TRANQUIL-AIRE. Industrial Acoustics Company, Inc. SN 266,157. Pub. 6-11-68. Filed 3-7-67.

855,553. DUAL SHIELD. Chemetron Corporation. SN 270,526. Pub. 6-11-68. Filed 5-3-67.

855,554. TOWN CRIER. Falcon Mfg. Company, Inc. SN 273,385. Pub. 6-11-68. Filed 6-8-67.

855,555. MYTEE GLO. Lisbon Industries, Incorporated. SN 274,017. Pub. 6-11-68. Filed 5-22-67.

855,556. CONSUMAT. Waste Combustion Corporation. SN 277,578. Pub. 6-11-68. Filed 8-4-67.

855,557. SPUN-FORM. Encanto Products, Inc. SN 277,901. Pub. 6-11-68. Filed 8-9-67.

855,558. RONSON. Ronson Corporation. SN 279,098. Pub. 6-11-68. Filed 8-25-67.

Class 35 — Belting, Hose, Machinery Packing, and Nonmetallic Tires

855,404. (See Class 13 for this trademark.)

855,559. SEALING SANDWICH. The Fitzgerald Manufacturing Company. SN 256,731. Pub. 6-11-68. Filed 10-19-66.

855,560. ELECTROLUX. Electrolux Corporation. SN 275,751. Pub. 6-11-68. Filed 7-11-67.

855,561. MARINEPAK. Garlock Inc. SN 281,570. Pub. 6-11-68. Filed 10-2-67.

855,562. DETROITER. The B. F. Goodrich Company. SN 282,073. Pub. 6-11-68. Filed 10-9-67.

855,563. NITTO. Nitto Tire Co., Ltd. SN. 282,387. Pub. 6-11-68. Filed 10-12-67.

855,564. N AND DESIGN. Nitto Tire Co., Ltd. SN 282,388. Pub. 6-11-68. Filed 10-12-67.

Class 36 — Musical Instruments and Supplies

855,367. (See Class 3 for this trademark.)

855,470. (See Class 21 for this trademark.)

855,565. THE PRO LINE. Rheem Manufacturing Company. SN 276,250. Pub. 6-11-68. Filed 7-18-67.

855,566. VANGUARD. Vanguard Recording Society, Inc. SN 276,969. Pub. 6-11-68. Filed 7-27-67.

855,567. CASCADE. Boise Cascade Corporation. SN 277,341. Pub. 6-11-68. Filed 8-2-67.

855,568. PETER PAN. Synthetic Plastics Co. SN 278,321. Pub. 6-11-68. Filed 8-15-67.

855,569. BANG. Web IV Music, Inc. SN 278,929. Pub. 6-11-68. Filed 8-23-67.

855,570. CRANWOOD. Tenna Corporation. SN 279,116. Pub. 6-11-68. Filed 8-25-67.

855,571. ERNIE BALL. Ernie Ball, Inc. SN 287,782. Pub. 6-11-68. Filed 12-29-67.

Class 37 — Paper and Stationery

855,367. (See Class 3 for this trademark.)

855,572. INTEK. The Hamlin Press Limited. SN 258,104. Pub. 6-11-68. Filed 11-7-66.

855,573. CO-REC-TOR. Eaton Allen Corp. SN 258,902. Pub. 6-11-68. Filed 11-17-66.

855,574. KO-REC-KIT. Eaton Allen Corp. SN 264,202. Pub. 6-11-68. Filed 2-8-67.

855,575. IBS AND DESIGN. Louis Schnyder, d.b.a. International Business Systems. SN 265,926. Pub. 6-11-68. Filed 3-3-67.

855,576. MEMOMATIC. Ketcham and McDougall, Inc. SN 269,429. Pub. 6-11-68. Filed 4-18-67.

855,577. THE SHORTWUN. Frank Y. Sherbondy, d.b.a. The Coat Retainer Company. SN 271,075. Pub. 6-11-68. Filed 5-9-67.

855,578. ROYALERASE. S. E. & M. Vernon, Inc. SN 276,372. Pub. 6-11-68. Filed 7-19-67.

855,579. CIRPAKE. The Budd Company. SN 280,548. Pub. 6-11-68. Filed 9-18-67.

855,580. WINDWOOD. The Budd Company. SN 280,549. Pub. 6-11-68. Filed 9-18-67.

855,581. GLIDOMATIC. Koh-I-Noor, Inc. SN 280,713. Pub. 6-11-68. Filed 9-19-67.

855,582. S AND DESIGN. Scott Paper Company. SN 280,973. Pub. 6-11-68. Filed 9-22-67.

855,583. FAMILY WALDORF. Scott Paper Company. SN 280,975. Pub. 6-11-68. Filed 9-22-67.

855,584. HSM. Reynolds Metals Company. SN 281,221. Pub. 6-11-68. Filed 9-26-67.

855,585. RAZZLEBERRY. Fox River Paper Corporation. SN 293,079. Pub. 6-11-68. Filed 3-13-68.

855,586. PUMPKIN. Fox River Paper Corporation. SN 293,081. Pub. 6-11-68. Filed 3-13-68.

855,587. LEMON TWIST. Fox River Paper Corporation. SN 293,082. Pub. 6-11-68. Filed 3-13-68.

Class 38 — Prints and Publications

855,367. (See Class 3 for this trademark.)

855,588. THE MEDUCATOR SERIES AND DESIGN. Burke Electronics, Inc. MULTIPLE CLASS (Classes 38 and 107). SN 227,986. Pub. 6-11-68. Filed 9-17-65.

855,589. "METROGRID." Claud Bonnar. SN 266,641. Pub. 6-11-68. Filed 3-14-67.

855,590. BINGO-BANGO-BONGO. James D. Collier & Co. SN 269,740. Pub. 6-11-68. Filed 4-21-67.

855,591. AMERICAN EXCHANGOR. Warren G. Harding, Inc. SN 282,698. Pub. 6-11-68. Filed 10-17-67.

Class 39 — Clothing

855,348. (See Class 1 for this trademark.)

855,358. (See Class 2 for this trademark.)

855,367. (See Class 3 for this trademark.)

855,592. SUNBRERO. States Nitewear Mfg. Co., Inc. SN 263,125. Pub. 6-11-68. Filed 1-23-67.

855,593. IMPERIAL AND DESIGN. Imperial Handkerchief Mfg. Co. SN 263,915. Pub. 6-11-68. Filed 2-3-67.

855,594. "WILLOWY" BY SMOOTHIE. The Strouse, Adler Company. SN 264,608. Pub. 6-11-68. Filed 2-13-67.

855,595. MULTIPAK. Costa de Majorca Inc. SN 267,615. Pub. 6-11-68. Filed 3-27-67.

855,596. SALEM CLIPPERS AND DESIGN. Salem Shoe Manufacturing Company. SN 267,677. Pub. 6-11-68. Filed 3-27-67.

855,597. BRIAR AND HEARTH. J. Schoeneman, Inc. SN 272,310. Pub. 6-11-68. Filed 5-24-67.

855,598. MOD MITTS. Everett K. Hunt. SN 274,521. Pub. 6-11-68. Filed 6-22-67.

855,599. SANIDRAPE AND DESIGN. Pacific Paper Products, Inc. SN 275,291. Pub. 6-11-68. Filed 7-3-67.

855,600. PERMA-JAC. Casualcraft, Inc. SN 275,430. Pub. 6-11-68. Filed 7-6-67.

855,601. WINDOW PANE AND DESIGN. Spartans Industries, Inc. SN 275,476. Pub. 6-11-68. Filed 7-6-67.

855,602. LORD DAYTON. Robinson Manufacturing Co. SN 275,959. Pub. 6-11-68. Filed 7-13-67.

855,603. BUNNYWARMER. Sylva Manufacturing Corporation. SN 276,486. Pub. 6-11-68. Filed 7-20-67.

855,604. HALF-TRACK. The Enro Shirt Company, Inc. SN 277,271. Pub. 6-11-68. Filed 8-1-67.

855,605. BLUE GOLD. McCallie Shoe Co. SN 278,311. Pub. 6-11-68. Filed 8-15-67.

855,606. SKIER'S BEAUTY CROWN. Skier Enterprises Inc. SN 278,318. Pub. 6-11-68. Filed 8-15-67.

855,607. TRUDI LEE. Raymond's, Inc. SN 278,820. Pub. 6-11-68. Filed 8-22-67.

855,608. ANDRE BEAUVORT AND DESIGN. William Hahn & Co. SN 279,068. Pub. 6-11-68. Filed 8-25-67.

855,609. SPRINGLITE. Palm Beach Company. SN 279,215. Pub. 6-11-68. Filed 8-28-67.

855,610. CROSS HATCH. The Goodyear Tire & Rubber Company. SN 279,394. Pub. 6-11-68. Filed 8-30-67.

855,611. MINI-TOPPER. Glensder Corporation. SN 279,475. Pub. 6-11-68. Filed 8-31-67.

855,612. JO-BAR. Arthur De Santis. SN 279,541. Pub. 6-11-68. Filed 9-1-67.

855,613. A. F. BOUTIQUE. Anne Fogarty, Inc. SN 279,591. Pub. 6-11-68. Filed 9-5-67.

855,614. PRE-EMPTOR. Curlee Clothing Company. SN 279,931. Pub. 6-11-68. Filed 9-8-67.

855,615. EPITOME. Curlee Clothing Company. SN 279,932. Pub. 6-11-68. Filed 9-8-67.

855,616. FOOT WARMER. Slumbertogs, Inc. SN 279,963. Pub. 6-11-68. Filed 9-8-67.

855,617. MASTER'S CHOICE. Curlee Clothing Company. SN 280,025. Pub. 6-11-68. Filed 9-11-67.

855,618. HUSH PUPPIES. Wolverine World Wide, Inc. SN 280,501. Pub. 6-11-68. Filed 9-15-67.

855,619. INSTA-SET. John Hamilton Corp. SN 280,589. Pub. 6-11-68. Filed 9-18-67.

855,620. RONLEY. Goldring Inc. SN 280,702. Pub. 6-11-68. Filed 9-19-67.

855,621. CARRIAGE WHEEL. Fairview Manufacturing Co., Inc. SN 281,365. Pub. 6-11-68. Filed 9-28-67.

855,622. HAPPY LEGS. Happy Legs, Inc. SN 285,661. Pub. 6-11-68. Filed 11-27-67.

855,623. SUBURBIA U.S.A. Sportempos, Inc. SN 285,864. Pub. 6-11-68. Filed 11-29-67.

855,624. HI-KWIK. Uniroyal, Inc. SN 289,358. Pub. 6-11-68. Filed 1-22-68.

855,625. ARIA. Maidenform, Inc. SN 291,671. Pub. 6-11-68. Filed 2-23-68.

855,626. BIG BEN. Blue Bell, Inc. SN 292,839. Pub. 6-11-68. Filed 3-11-68.

855,627. SUPER BOWL. Camp and McInnes, Inc. SN 293,197. Pub. 6-11-68. Filed 3-14-68.

855,628. CLICK-IT. Kops Bros., Inc. SN 293,200. Pub. 6-11-68. Filed 3-14-68.

Class 40 — Fancy Goods, Furnishings, and Notions

855,629. MOMONIC. The Union Pin Company. SN 266,704. Pub. 6-11-68. Filed 3-14-67.

Class 42 — Knitted, Netted, and Textile Fabrics, and Substitutes Therefor

855,348. (See Class 1 for this trademark.)

855,630. AVLIN. FMC Corporation. SN 284,181. Pub. 6-11-68. Filed 11-6-67.

855,631. HARTUFT. Courtaulds, Limited. SN 284,292. Pub. 6-11-68. Filed 11-7-67.

855,632. SLEEP-IN-BEAUTY. Imperial Satin, Inc. SN 293,085. Pub. 6-11-68. Filed 3-13-68.

Class 43 — Thread and Yarn

855,348. (See Class 1 for this trademark.)

855,354. (See Class 1 for this trademark.)

855,355. (See Class 1 for this trademark.)

855,633. PINGOREX. Filatures Prouvost-Masurel & Cie, La Lainiere de Roubaix. SN 282,183. Pub. 6-11-68. Filed 10-10-67.

Class 44 — Dental, Medical, and Surgical Appliances

855,634. PORTASCAN. Physionic Engineering, Inc. SN 248,249. Pub. 6-11-68. Filed 6-16-66.

855,635. PHYSIONIC PORTASCAN. Physionic Engineering, Inc. SN 248,359. Pub. 6-11-68. Filed 6-17-66.

855,636. STANDBY VENTRICOR. Cordis Corporation. SN 261,573. Pub. 6-11-68. Filed 12-28-66.

855,637. UTRACEPTOR. Ralph R. Robinson. SN 261,680. Pub. 6-11-68. Filed 12-29-66.

855,638. SCIRT. Bio-Medical Systems, Inc. SN 270,752. Pub. 6-11-68. Filed 5-5-67.

855,639. SABONA. Jacques Andre George Guy Henri de Gachassin-Lafite, The Vicomte d'Orthez. SN 271,043. Pub. 6-11-68. Filed 5-9-67.

855,640. TRIFLEX. Baxter Laboratories, Inc. SN 279,357. Pub. 6-11-68. Filed 8-30-67.

855,641. MI-THERM. Propper Manufacturing Company, Inc. SN 279,858. Pub. 6-11-68. Filed 9-7-67.

855,642. ULTRA-FLO. Baxter Laboratories, Inc. SN 280,384. Pub. 6-11-68. Filed 9-15-67.

855,643. ABBOCATH. Abbott Laboratories. SN 280,754. Pub. 6-11-68. Filed 9-20-67.

855,644. BLUSHING BEAUTY. Troy Industries Inc. SN 281,732. Pub. 6-11-68. Filed 10-3-67.

Class 46 — Foods and Ingredients of Foods

855,358. (See Class 2 for this trademark.)

855,367. (See Class 3 for this trademark.)

855,431. (See Class 18 for this trademark.)

855,645. J-BIRD FARMS. J. D. Jewell, Inc., d.b.a. J-Bird Farms. SN 253,147. Pub. 6-11-68. Filed 8-25-66.

855,646. HIFALUTIN HAZELNUT. Foremost-McKesson, Inc., assignee of Foremost Dairies, Inc. SN 258,799. Pub. 12-26-67. Filed 11-16-66.

855,647. NUTELLA. P. Ferrero & C. S.p.A. SN 258,993. Pub. 6-11-68. Filed 11-18-66.

855,648. BLUE DIAMOND AND DESIGN. California Almond Growers Exchange. SN 260,015. Pub. 9-12-67. Filed 12-5-66.

855,649. NEW LONDON. The Borden Company. SN 267,005. Pub. 6-11-68. Filed 3-17-67.

855,650. MAYDEX. SCM Corporation, assignee of The Glidden Company, d.b.a. Durkee Famous Foods. SN 269,421. Pub. 6-11-68. Filed 4-18-67.

855,651. KROP KEEP AND DESIGN. Watkins Products, Inc. SN 273,704. Pub. 6-11-68. Filed 6-12-67.

855,652. MR. PZ. Antra Corp. SN 279,446. Pub. 6-11-68. Filed 8-31-67.

855,653. MR. PRETZ. Antra Corp. SN 279,447. Pub. 6-11-68. Filed 8-31-67.

855,654. WEIGHT WATCHERS. Weight Watchers International, Inc. SN 279,696. Pub. 4-9-68. Filed 9-5-67.

855,655. SKIMMERS. Mead Johnson & Company (Delaware corporation), assignee of Mead Johnson & Company (Indiana corporation). SN 282,021. Pub. 6-11-68. Filed 10-6-67.

855,656. HI-PROTENA. Ralston Purina Company. SN 285,059. Pub. 6-11-68. Filed 11-16-67.

855,657. TIPPY & MITTY. National Biscuit Company. SN 285,448. Pub. 6-11-68. Filed 11-22-67.

855,658. LITTLE BITES. National Biscuit Company. SN 285,449. Pub. 6-11-68. Filed 11-22-67.

855,659. SOUPIES. National Biscuit Company. SN 285,450. Pub. 6-11-68. Filed 11-22-67.

855,660. OH-GEE. O. G. Meyer Candy Company. SN 285,669. Pub. 6-11-68. Filed 11-27-67.

855,661. SHENN-DUTCH. Risser-Martin, Incorporated. SN 286,555. Pub. 6-11-68. Filed 12-8-67.

855,662. CALFRESH. Arden-Mayfair, Inc., d.b.a. Low Cost Markets. SN 292,737. Pub. 6-11-68. Filed 3-8-68.

Class 50 — Merchandise Not Otherwise Classified

855,358. (See Class 2 for this trademark.)

855,663. GEMCARV. Walker & Zanger, Inc. SN 250,111. Pub. 6-11-68. Filed 7-12-66.

855,664. UNIPAL. Meuwissen Industrie N.V. SN 258,709. Pub. 6-11-68. Filed 11-15-66.

855,665. FINE LINE. The Standard Products Company. SN 280,105. Pub. 6-11-68. Filed 9-11-67.

855,666. MAGNA-TEL AND DESIGN. Warren S. Hastings. SN 280,948. Pub. 6-11-68. Filed 9-22-67.

855,667. INSTA-PAK. George E. Belcher Company. SN 287,875. Pub. 6-11-68. Filed 1-2-68.

855,668. ULTRA-PAK. George E. Belcher Company. SN 287,876. Pub. 6-11-68. Filed 1-2-68.

855,669. KEM-GUARD. Kem-Wove Industries, Inc. SN 288,438. Pub. 6-11-68. Filed 1-9-68.

855,670. SHUR-KOVER. Shur-Line Manufacturing Co., Inc. SN 289,721. Pub. 6-11-68. Filed 1-26-68.

Class 51 — Cosmetics and Toilet Preparations

855,671. JUVENA. Lovida AG. SN 239,641. Pub. 6-11-68. Filed 2-25-66.

855,672. WILKINSON SWORD AND DESIGN. Wilkinson Sword Limited. SN 268,444. Pub. 6-11-68. Filed 4-9-68.

855,673. SPRAY POWER. Avon Products, Inc. SN 275,997. Pub. 6-11-68. Filed 7-14-67.

855,674. MISS COOL. Soft Sheen Products Co., Inc. SN 278,134. Pub. 6-11-68. Filed 8-11-67.

855,675. SUN CHUM. Stanley Home Products, Inc. SN 278,135. Pub. 6-11-68. Filed 8-11-67.

855,676. MATING SEASON. The Mennen Company. SN 278,313. Pub. 6-11-68. Filed 8-15-67.

855,677. PROVO. Apex-Trol, Inc., assignee of Apex Beauty Products Manufacturing Corp., d.b.a. Apex Beauty Products. SN 278,566. Pub. 6-11-68. Filed 8-18-67.

855,678. GARBAGE. Aldina Products, Inc. SN 278,774. Pub. 6-11-68. Filed 8-22-67.

855,679. ALBERTO VO5 AND DESIGN. Alberto-Culver Company. SN 286,874. Pub. 6-11-68. Filed 12-14-67.

Class 52 — Detergents and Soaps

855,382. (See Class 6 for this trademark.)

855,680. FAB ETC. AND DESIGN. Colgate-Palmolive Company. SN 257,935. Pub. 6-11-68. Filed 11-4-66.

855,681. COOL MAGIC. International Products and Services, Inc. SN 268,498. Pub. 6-11-68. Filed 4-6-67.

855,682. PINK AHOY AND DESIGN. The Great Atlantic & Pacific Tea Company, Inc. SN 271,146. Pub. 6-11-68. Filed 5-10-67.

855,683. DIRT GRABBER. American Cyanamid Company. SN 276,079. Pub. 6-11-68. Filed 7-17-67.

855,684. SEA GARDEN. Avon Products, Inc. SN 277,787. Pub. 6-11-68. Filed 7-17-67.

855,685. GLAD TIDINGS. Stanley Home Products, Inc. SN 277,940. Pub. 6-11-68. Filed 8-9-67.

855,686. BULLET AND DESIGN. Debco, Inc. SN 278,196. Pub. 6-11-68. Filed 8-14-67.

855,687. BLACO-STRIP. Baron Blakeslee, Inc. SN 286,876. Pub. 6-11-68. Filed 12-14-67.

855,688. SPARKLIN' WHITE. Purex Corporation, Ltd., d.b.a. Industrial Equities, Inc. SN 289,459. Pub. 6-11-68. Filed 1-24-68.

855,689. MISTIC-MILD. Bevin Laboratories, Inc. SN 292,239. Pub. 6-11-68. Filed 3-1-68.

855,690. HIGH CHIEF AND DESIGN. King Kullen Grocery Co., Inc. SN 293,198. Pub. 6-11-68. Filed 3-14-68.

Service Marks

Class 100 — Miscellaneous

855,691. MODULAR BUILDINGS INTERNATIONAL AND DESIGN. Modular Buildings Inc. SN 227,603. Pub. 6-11-68. Filed 9-10-65.

855,692. NINO'S STEAK ROUND-UP AND DESIGN. Nino's Steak Round-Up, Inc. SN 245,415. Pub. 11-21-67. Filed 5-11-66.

855,693. HR (DESIGN). P. Huber Hanes, Jr. SN 245,477. Pub. 6-11-68. Filed 5-12-66.

855,694. THE SEA RANCH AND DESIGN. Oceanic Properties, Inc. SN 246,933. Pub. 6-11-68. Filed 5-31-66.

855,695. THE OLD SALOON. Vonderbrink and Baron, Inc. SN 278,544. Pub. 6-11-68. Filed 8-17-67.

855,696. NEBA. Neba Roast Beef Restaurants, Inc. SN 279,955. Pub. 6-11-68. Filed 9-8-67.

855,697. S-H. Hilton Hotels Corporation. SN 280,870. Pub. 6-11-68. Filed 9-21-67.

855,698. JOLLY TROLL AND DESIGN. Jolly Troll, Inc. SN 281,582. Pub. 6-11-68. Filed 10-2-67.

855,699. THE TEXAN AND DESIGN. The Texan Drive-Ins Ltd. SN 283,176. Pub. 6-11-68. Filed 10-23-67.

855,700. PTA PROTOTYPES. Plastic Tooling Aids Laboratory, Inc. SN 291,684. Pub. 6-11-68. Filed 2-23-68.

Class 101 — Advertising and Business

855,701. BEAR (DESIGN). Big Bear, Inc., by change of name from Fleet Tractor Stores, Inc. SN 217,183. Pub. 12-7-65. Filed 4-23-65.

855,702. ROLL-IT DERBY. Sheldon Fredericks Advertising Associates, Inc. SN 229,784. Pub. 6-11-68. Filed 10-11-65.

855,703. PERSONAL AFFAIRS MONTH. Horace E. Dellsser, d.b.a. Personal Affairs Institute of America. SN 245,462. Pub. 6-11-68. Filed 5-12-66.

855,704. THE WORLD IS A PICTURE. Albert J. Moccia, Jr., and Sandra T. Moccia (joint owners), d.b.a. The World Is a Picture. SN 250,170. Pub. 6-11-68. Filed 7-13-66.

855,705. TRADEWAYS AND DESIGN. Elliot Michael Leban, d.b.a. Tradeways. SN 263,388. Pub. 6-11-68. Filed 1-26-67.

855,706. LITTLE PROFIT AND DESIGN. Leon Shaffer Golnick Advertising, Inc. SN 270,489. Pub. 6-11-68. Filed 5-2-67.

855,707. KITCHEN INDUSTRY SHOWCASE. American Institute of Kitchen Dealers. SN 271,111. Pub. 6-11-68. Filed 5-10-67.

855,708. FULLERETTE. The Fuller Brush Company. SN 272,484. Pub. 6-11-68. Filed 5-26-67.

855,709. H-P. The H-P Stores, Inc. SN 278,687. Pub. 6-11-68. Filed 8-21-67.

855,710. VILLAGE PANTRY AND DESIGN. Marsh Supermarkets, Inc. SN 279,402. Pub. 6-11-68. Filed 8-30-67.

855,711. FANNING AND DESIGN. Fanning Personnel Agency, Inc. SN 282,561. Pub. 6-11-68. Filed 10-16-67.

855,712. CCA AND DESIGN. The Pillsbury-Occidental Company. SN 283,152. Pub. 6-11-68. Filed 10-23-67.

855,713. CALL-A-COMPUTER. The Pillsbury-Occidental Company. SN 283,153. Pub. 6-11-68. Filed 10-23-67.

855,714. BBI. Business Builders International, Inc. SN 284,533. Pub. 6-11-68. Filed 11-13-67.

855,715. TANTALLON. Prestwick, Inc. MULTIPLE CLASS (Classes 101, 102, and 103). SN 288,464. Pub. 6-11-68. Filed 1-10-68.

855,716. SERVICE SPECIALISTS. Service Specialists, Ltd. SN 291,009. Pub. 6-11-68. Filed 2-14-68.

Class 102 — Insurance and Financial

855,715. (See Class 101 for this trademark.)

855,717. SCOT FREE. Lakeside Bank. SN 268,318. Pub. 6-11-68. Filed 4-4-67.

855,718. DOUBLE CREDIT POWER AND DESIGN. Local Loan Co. SN 269,903. Pub. 6-11-68. Filed 4-24-67.

Class 103 — Construction and Repair

855,715. (See Class 101 for this trademark.)

855,719. OPERATION WATER SCOPE. Clack Corporation. SN 287,481. Pub. 6-11-68. Filed 12-26-67.

Class 105 — Transportation and Storage

855,720. INTRAV. International Travel Advisors Incorporated. SN 280,596. Pub. 6-11-68. Filed 9-18-67.

855,721. AMAZING AMERICA TOURS. The Greyhound Corporation. SN 281,575. Pub. 6-11-68. Filed 10-2-67.

Class 107 — Education and Entertainment

855,588. (See Class 38 for this trademark.)

855,722. MAYNARD AND DESIGN. Maynard Research Council Incorporated. SN 265,079. Pub. 6-11-68. Filed 2-20-67.

855,723. IFEE. Institute for Emotional Education, Inc. SN 267,333. Pub. 6-11-68. Filed 3-22-67.

855,724. ASTRO-COLOR. American Airlines, Inc. SN 269,155. Pub. 6-11-68. Filed 4-14-67.

855,725. PONY LEAGUE AND DESIGN. Boys Baseball, Inc. SN 269,972. Pub. 6-11-68. Filed 4-25-67.

855,726. ARTHUR. Discotheque, Inc. SN 279,161. Pub. 6-11-68. Filed 8-28-67.

855,727. CHRISTIAN SERVICE BRIGADE AND DESIGN. Christian Service Brigade. SN 281,153. Pub. 6-11-68. Filed 1-16-67.

855,728. JOURNEY TO ADVENTURE. GLL TV Enterprises, Inc. SN 281,285. Pub. 6-11-68. Filed 9-27-67.

855,729. MYSTIC SEAPORT. The Marine Historical Association, Incorporated. SN 288,661. Pub. 6-11-68. Filed 1-12-68.

Collective Membership Mark

Class 200

855,730. MAI AMERICAN INSTITUTE OF REAL ESTATE APPRAISERS AND DESIGN. American Institute of Real Estate Appraisers of the National Association of Real Estate Boards. SN 270,871. Pub. 6-11-68. Filed 5-8-67.

SUPPLEMENTAL REGISTER

These registrations are not subject to opposition.

Class 1 — Raw or Partly Prepared Materials

855,731. Crescendoe Gloves, Inc., Johnstown, N.Y. SN 285,819. Filed 11-29-67.

CHESTERTON

For Leathers (Int. Cl. 18).
First use July 1, 1944.

Class 15 — Oils and Greases

855,732. J. Gilbert Haller, d.b.a. Haller Oil Co., Lancaster, Pa. SN 253,526. Filed P.R. 8-31-66; Am. S.R. 6-4-68.

For Scented Oil for Use With a Floating Wick for Decorative Purposes (Int. Cl. 4).
First use Aug. 12, 1966.

Class 21 — Electrical Apparatus, Machines, and Supplies

855,733. Wellmade Metal Products Company, Oakland, Calif. SN 263,633. Filed P.R. 1-30-67; Am. S.R. 6-24-68.

ROAD LEVEL

For Electric Lighting Fixtures for Road Illumination (Int. Cl. 11).
First use Nov. 30, 1966.

855,734. Allen Electric and Equipment Company, Chicago, Ill., assignee of Anzac Industries, Inc., Cleveland, Ohio. SN 264,380. Filed P.R. 2-10-67; Am. S.R. 6-12-68.

QUICK-GRIP

For Antennas Provided With Bases Permitting the Same To Be Mounted on Vehicles by Clamping Adjacent to an Opening in the Vehicle Body and Antenna Bases Adapted To Be So Mounted (Int. Cl. 9).
First use Jan. 19, 1967.

855,735. Valcor Engineering Corporation, Kenilworth, N.J. SN 274,124. Filed P.R. 6-16-67; Am. S.R. 6-19-68.

DRI-SOLENOID

For Solenoid Operated Valves (Int. Cl. 9).
First use May 11, 1967.

Class 23 — Cutlery, Machinery, and Tools, and Parts Thereof

855,736. TRW Inc., Cleveland, Ohio. SN 259,683. Filed P.R. 11-29-66; Am. S.R. 6-12-68.

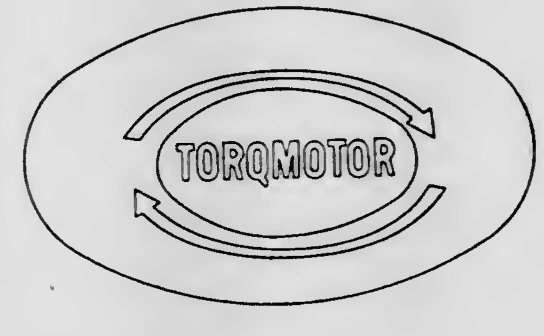

For Hydraulic Motors (Int. Cl. 7).
First use Sept. 21, 1966; Mar. 23, 1966, in another display.

855,737. Jaccard Corporation, Buffalo, N.Y. SN 274,210. Filed P.R. 6-19-67; Am. S.R. 6-19-68.

JACCARD

For Meat Tenderizing Machine (Int. Cl. 7).
First use Jan. 17, 1964.

Class 51 — Cosmetics and Toilet Preparations

855,738. The Bobby Co., New York, N.Y. SN 289,769. Filed 1-29-68.

"WEATHERPROOF"

For Hair Set Lotion (Int. Cl. 3).
First use Dec. 23, 1966.

Service Mark

Class 101 — Advertising and Business

855,739. Executive Advancement Corporation, New York, N.Y. SN 276,208. Filed P.R. 7-18-67; Am. S.R. 4-12-68.

EXECUTIVE ADVANCEMENT

For Placement Service for Executives (Int. Cl. 35).
First use Feb. 19, 1967.

TRADEMARK REGISTRATIONS RENEWED

67,950. VENTURI. Cl. 26 (Int. Cl. 9). 2–25–08.
69,913. KLAXON. Cl. 23 (Int. Cl. 9). 7–14–08.
71,267. 'HAZELINE' SNOW. Cl. 51 (Int. Cl. 3). 11–10–08.
71,286. "T U X E D O" AND REPRESENTATION OF SHIELD. Cl. 46 (Int. Cl. 29). 11–17–08.
71,460. RYTOL. Cl. 6 (Int. Cl. 1). 11–24–08.
228,878. GRAINS DE VALS. Cl. 18 (Int. Cl. 5). 6–14–27.
238,664. OLD GOLD ETC. AND DESIGN. Cl. 17 (Int. Cl. 34). 2–14–28.
241,691. DENTOCOLL. Cl. 44 (Int. Cl. 5). 5–8–28.
241,962. MAPLE-ADE. Cl. 46 (Int. Cl. 30). 5–8–28.
243,494. MON PARFUM. Cl. 51 (Int. Cl. 3). 6–26–28.
243,570. THIRTY-FIVE-SEVEN. Cl. 23 (Int. Cl. 7). 6–26–28.
244,001. VARSOL. Cl. 15 (Int. Cl. 4). 7–3–28.
245,460. "IDEAL" ETC. AND REPRESENTATION OF A PAPER BAG OR SACK. Cl. 12 (Int. Cl. 19). 8–14–28.
246,774. SAVE-LITE. Cl. 16 (Int. Cl. 2). 9–11–28.
247,041. SUNNY SUE. Cl. 39 (Int. Cl. 25). 9–18–28.
248,948. "LILAS DE FRANCE" AND DESIGN. Cl. 51 (Int. Cl. 3). 11–6–28.
249,413. SHOECRAFT. Cl. 39 (Int. Cl. 25). 11–13–28.
249,479. "PED-PLI PROCESS" AND DESIGN. Cl. 39 (Int. Cl. 25). 11–13–28.
249,931. SHOECRAFT. Cl. 3 (Int. Cl. 18). 11–27–28.
437,546. TETONKA. Cl. 1 (Int. Cl. 31). 3–30–48.
437,698. PUDDLER'S. Cl. 39 (Int. Cl. 25). 3–30–48.
437,819. CONCORD HOUSE. Cl. 32 (Int. Cl. 20). 3–30–48.
438,634. MAN WITH MILK BOTTLE (DESIGN). Cl. 46 (Int. Cl. 29). 5–4–48.
439,386. GENERAL QUICK AID FIRE GUARD AND DESIGN. Cl. 23 (Int. Cl. 9). 6–22–48.
439,388. HERITAGE. Cl. 13 (Int. Cls. 11 and 21). 6–22–48.
439,432. ROMA AND DESIGN. Cl. 47 (Int. Cl. 33). 6–29–48.
439,500. MOGUL ELECTRIC-BONDER. Cl. 21 (Int. Cl. 9). 7–6–48.
439,682. AHOY. Cl. 51 (Int. Cl. 3). 7–13–48.
439,693. VEECOTE. Cl. 6 (Int. Cl. 1). 7–13–48.
439,950. SUPREMO MEZCAL DE LA FABRICA DE AND DESIGN. Cl. 49 (Int. Cl. 33). 8–3–48.
440,119. EL IMPARCIAL AND DESIGN. Cl. 38 (Int. Cl. 16). 8–10–48.
440,179. MERRIVALE MERRIMAC. Cl. 39 (Int. Cl. 25). 8–17–48.
440,335. GENERAL QUICK AID SNO FOG AND DESIGN. Cl. 23 (Int. Cl. 9). 8–24–48.
440,644. BANKER. Cl. 27 (Int. Cl. 14). 9–14–48.
440,645. BRIGADIER. Cl. 27 (Int. Cl. 14). 9–14–48.
440,646. BROADCASTER. Cl. 27 (Int. Cl. 14). 9–14–48.
440,647. BROKER. Cl. 27 (Int. Cl. 14). 9–14–48.
440,649. GODDESS OF TIME. Cl. 27 (Int. Cl. 14). 9–14–48.
440,650. SPONSOR. Cl. 27 (Int. Cl. 14). 9–14–48.
440,855. WURCO. Cl. 19 (Int. Cl. 12). 10–5–48.
441,107. SIGHT SAVERS. Cl. 4 (Int. Cl. 3). 10–19–48.
441,238. KYSO. Cl. 15 (Int. Cl. 4). 11–9–48.
441,264. IMPERIAL. Cl. 17 (Int. Cl. 34). 11–9–48.
441,334. KLEER-FLO. Cl. 52 (Int. Cl. 1). 11–16–48.
441,365. HERCULES. Cl. 31 (Int. Cl. 11). 11–23–48.
441,412. SUPERTONE. Cl. 6 (Int. Cl. 5). 11–23–48.
441,447. NOBILITY PLATE AND DESIGN. Cl. 28 (Int. Cl. 8). 11–30–48.
441,488. LUXUOSA. Cl. 23 (Int. Cl. 8). 11–30–48.
441,520. RCA AND DESIGN. Cl. 26 (Int. Cl. 9). 11–30–48.
441,565. LEM MOTLOW AND DESIGN. Cl. 49 (Int. Cl. 33). 12–7–48.
500,106. MINNSEAL. Cl. 16 (Int. Cl. 2). 4–20–48.
500,107. MINNLITE. Cl. 16 (Int. Cl. 2). 4–20–48.
500,254. MERCODOL. Cl. 18 (Int. Cl. 5). 5–11–48.
500,266. SNOWKOTE. Cl. 6 (Int. Cl. 5). 5–11–48.
500,494. SUPERIOR. Cl. 14 (Int. Cl. 6). 6–1–48.
500,737. ZENITH. Cl. 6 (Int. Cl. 1). 6–29–48.
500,843. ROZONE. Cl. 21 (Int. Cl. 9). 7–6–48.
500,888. FIG LEAF (DESIGN). Cl. 39 (Int. Cl. 25). 7–6–48.
500,994. FC (DESIGN). Cl. 14 (Int. Cl. 6). 7–13–48.
501,007. DAVIDSON. Cl. 11 (Int. Cl. 16). 7–13–48.
501,018. THI-AMINO. Cl. 18 (Int. Cl. 5). 7–13–48.
501,256. DIATRIN. Cl. 18 (Int. Cl. 5). 7–27–48.
501,258. TOXICHLOR. Cl. 6 (Int. Cl. 5). 7–27–48.
501,393. ALLAIN. Cl. 52 (Int. Cl. 3). 8–3–48.
501,627. HEALTH-TEX. Cl. 42 (Int. Cl. 24). 8–17–48.
501,737. CREPENIT. Cl. 39 (Int. Cl. 25). 8–17–48.
501,786. RED-HOT AND DESIGN. Cl. 39 (Int. Cl. 25). 8–24–48.
501,787. BIG BOX AND DESIGN. Cl. 39 (Int. Cl. 25). 8–24–48.
501,789. ARCTIC. Cl. 39 (Int. Cl. 25). 8–24–48.
501,790. LEOPARD. Cl. 39 (Int. Cl. 25). 8–24–48.
501,791. WORKHOUND. Cl. 39 (Int. Cl. 25). 8–24–48.
501,792. STOCKY. Cl. 39 (Int. Cl. 25). 8–24–48.
501,794. LITTLE JACK. Cl. 39 (Int. Cl. 25). 8–24–48.
501,899. INDUSPRAY. Cl. 6 (Int. Cl. 5). 8–31–48.
502,017. SURROGATE. Cl. 37 (Int. Cl. 16). 9–7–48.
502,155. NERCO AND DESIGN. Cl. 34 (Int. Cl. 11). 9–14–48.
502,255. DETECTO. Cl. 2 (Int. Cl. 20). 9–21–48.
502,322. OKOMETAL. Cl. 21 (Int. Cl. 6). 9–21–48.
502,747. NORISODRINE. Cl. 18 (Int. Cl. 5). 10–5–48.
503,058. BLUE BIRD AND DESIGN. Cl. 28 (Int. Cl. 14). 10–19–48.
503,223. WINGRADE. Cl. 7 (Int. Cl. 22). 10–19–48.
503,229. PHILDELL. Cl. 35 (Int. Cl. 17). 10–19–48.
503,612. TRIPLETOE. Cl. 39 (Int. Cl. 25). 11–2–48.
503,627. MY-T-TUFF AND DESIGN. Cl. 39 (Int. Cl. 25). 11–2–48.
503,630. HENREDON. Cl. 32 (Int. Cl. 20). 11–2–48.
503,754. POLYMENE. Cl. 6 (Int. Cl. 1). 11–9–48.
503,794. BUCCALETS. Cl. 18 (Int. Cl. 5). 11–9–48.
503,904. ISODYNAMIC. Cl. 21 (Int. Cl. 9). 11–16–48.
503,907. MAR TEMP. Cl. 6 (Int. Cl. 1). 11–16–48.
504,046. BURLINGTON. Cl. 42 (Int. Cl. 24). 11–16–48.
504,061. CAPITOL PARK. Cl. 1 (Int. Cl. 31). 11–23–48.
504,064. TUBARINE. Cl. 18 (Int. Cl. 5). 11–23–48.
504,089. TRANSVELDT. Cl. 1 (Int. Cl. 18). 11–23–48.
504,090. REPRESENTATION OF AN ARROWHEAD. Cl. 1 (Int. Cl. 18). 11–23–48.
504,326. OBRON. Cl. 18 (Int. Cl. 5). 11–30–48.
504,327. HEPTUNA AND DESIGN. Cl. 18 (Int. Cl. 5). 11–30–48.
504,442. TRIANGLE DESIGN AND ARCUATE BAND. Cl. 43 (Int. Cl. 23). 11–30–48.
504,523. BURLINGTON. Cl. 43 (Int. Cl. 23). 1–30–48.
504,585. CRYSTELLE. Cl. 42 (Int. Cl. 24). 12–7–48.
504,666. PRICE'S PRIDE. Cl. 42 (Int. Cl. 24). 12–7–48.

TRADEMARK REGISTRATIONS CANCELED

Section 7(d)

92,166. AYER'S. Cl. 51. 6–24–13.
255,661. AYER'S PECTORAL AND DESIGN. Cl. 6. 4–30–29.
265,920. CROWN STANDARD ETC. AND DESIGN. Cl. 15. 1–7–30.
279,011. AYER'S PECTORAL AND REPRESENTATION OF CARTON. Cl. 18. 1–6–31.
825,404. VITA-C-SLIM. Cl. 46. 3–7–67.
828,954. SH STAUFFER HOECHST AND DESIGN. Cl. 1. 5–23–67.
845,045. THE DOUBLE EAGLE. Cl. 39. 2–27–68.

Section 8

The following registrations issued July 10, 1962

733,987. REPRESENTATION OF A FLOWER. Cl. 1.
733,995. KARDEL. Cl. 1.
733,996. COURTELLE AND DESIGN. Cl. 1.
734,000. SYSTEM B ETC. AND DESIGN. Cl. 2.
734,005. U.S. RESEARCH CORP. AND DESIGN. Cl. 4.
734,008. CUSTOM-CARE. Cl. 6.
734,011. DRI-AD. Cl. 6.
734,015. HOLORIB. Cl. 12.

734,016. DECATEX. Cl. 12.
734,017. STURDY-BILT ETC. AND DESIGN. Cl. 12.
734,018. FOYERETTE. Cl. 12.
734,021. BLACK METAL. Cl. 12.
734,022. BLACK VELVET. Cl. 12.
734,037. FRANKLIN. Cl. 13.
734,040. ECON-O-BRITE. Cl. 14.
734,044. PETROSENE. Cl. 15.
734,052. R=E/I. Cl. 16.
734,055. SILENT-GUARD. Cl. 16.
734,065. AMERZENE. Cl. 18.
734,070. SANTA FE AND STAR DESIGN. Cl. 20.
734,071. TEL·A·PIN. Cl. 21.
734,089. PERMABOND. Cl. 21.
734,090. CLARICON. Cl. 21.
734,091. MITE-MARX. Cl. 21.
734,092. SEWNAR. Cl. 21.
734,094. ELECTROL DIAL AND DESIGN. Cl. 21.
734,100. HATCH-A-PET. Cl. 22.
734,102. "RODDYMASTER." Cl. 22.
734,103. "EXCEPTIONALE." Cl. 22.
734,108. POR CAMINOS BIBLICOS. Cl. 22.
734,109. PENGAD. Cl. 22.
734,110. AMF. Cl. 22.
734,111. SCRIBBLE BUG. Cl. 22.
734,112. CHIVALRY AND DESIGN. Cl. 22.
734,113. TUMBLHOOP. Cl. 22.
734,115. WATER JET. Cl. 22.
734,117. VIP. Cl. 22.
734,123. ASHDEE. Cl. 23.
734,125. PRO-STATION. Cl. 23.
734,126. EZ SHARP. Cl. 23.
734,127. EZ SHARP AND DESIGN. Cl. 23.
734,130. PRESSTO-BURGER. Cl. 23.
734,132. PRO-MAT. Cl. 23.
734,134. CORK-SCROOGE. Cl. 23.
734,135. DALEMARK. Cl. 23.
734,143. BELLOCK. Cl. 25.
734,147. TEVICAN. Cl. 26.
734,148. VISIFLUX. Cl. 26.
734,150. SAMIS. Cl. 26.
734,152. PICO-BIT. Cl. 26.
734,158. RSCO AND DESIGN. Cl. 26.
734,164. ARNO. Cl. 31.
734,170. CATAWBA COLLECTION. Cl. 32.
734,171. STOR-EASE. Cl. 32.
734,172. SLIDE-A-WAY. Cl. 32.
734,173. ASKO AND DESIGN. Cl. 32.
734,176. VAL A BED. Cl. 32.
734,184. CHOW-HI-LO WAGON. Cl. 34.
734,188. THERMOTANK. Cl. 34.
734,189. ELECTROGLAS. Cl. 34.
734,190. NICK-O-LINE. Cl. 34.
734,192. AUDIOTRONIC. Cl. 36.
734,193. CARAVELLE. Cl. 36.
734,199. MINI MENU. Cl. 38.
734,205. STAR SKINS AND DESIGN. Cl. 39.
734,207. J3 AND DESIGN. Cl. 39.
734,211. CONVERTIBELLE. Cl. 39.
734,212. THERE IS A MAN ON YOUR MIND BERNARD WORKMAN AND DESIGN. Cl. 39.
734,217. WELD-LOCK. Cl. 39.
734,219. MINI CHECK AND DESIGN. Cl. 39.
734,224. SLAM SAM. Cl. 39.
734,225. ELTON AND DESIGN. Cl. 39.
734,226. CHIRO-CRAFT. Cl. 39.
734,227. COURTELLE AND DESIGN. Cl. 39.
734,229. CREST HILL CAPRIPEARL AND DESIGN. Cl. 40.
734,231. SUPRALON. Cl. 42.
734,238. ELF MODE. Cl. 42.
734,239. ACOUSTI-FLEX. Cl. 42.
734,240. BEL MODO. Cl. 42.
734,241. TIEMPO COLONIALE. Cl. 42.
734,243. STYLIZED AM ETC. AND DESIGN. Cl. 42.
734,245. –A–OKAY. Cl. 42.
734,247. END-O-CARE. Cl. 42.
734,248. COURTELLE AND DESIGN. Cl. 42.
734,249. JET STRIPE. Cl. 42.
734,251. REPRESENTATION OF A HOUSE IN A CIRCLE ON A SQUARE BACKGROUND. Cl. 43.
734,252. REPRESENTATION OF A FLOWER. Cl. 43.
734,253. MASUREL MILLS ETC. AND DESIGN. Cl. 43.
734,254. COURTELLE AND DESIGN. Cl. 43.
734,257. FIRMATRON BY NORRUTH. Cl. 44.
734,260. JILL ROBINS. Cl. 44.
734,261. DUAL-CIRCLE (DESIGN). Cl. 44.
734,267. VOLPA. Cl. 45.
734,273. GIRARD'S AND DESIGN. Cl. 46.
734,274. LICK STIX. Cl. 46.
734,275. LITTLE ARTIE'S BEEBLEBERRY FUN DRINK. Cl. 46.
734,277. ZENITH. Cl. 46.
734,280. ESTORIL. Cl. 46.
734,287. ANCHOVETTE. Cl. 46.
734,292. GLOW. Cl. 46.
734,306. SESA-BUN. Cl. 46.
734,307. SESA-OIL. Cl. 46.
734,308. LB LTD. AND DESIGN. Cl. 48.
734,309. BLANCHARD'S 777. Cl. 49.
734,311. STUMP HOLE. Cl. 49.
734,312. THE WINTHROP. Cl. 50.
734,318. LOCK & KEY. Cl. 52.
734,324. MIRROR SHOPS AND DESIGN. Cl. 101.
734,329. ARMOUR-GLAS. Cl. 103.
734,331. AMERICAN RENT-A-CAR SYSTEM AND DESIGN. Cl. 105.
734,334. HOWARD W. SAMS ETC. AND DESIGN. Cl. B.
734,335. HOWARD W. SAMS AND GROTESQUE REPRESENTATION OF MAN. Cl. B.
734,338. MARKEE. Cl. 12.
734,339. MCBRIDE'S. Cl. 18.
734,341. KELVIN KLAMPS. Cl. 21.
734,342. KELVIN KLIPS. Cl. 21.
734,344. ELECTRO-SHRED. Cl. 23.
734,346. WAFFLE. Cl. 33.
734,348. PLAINWELL. Cl. 37.
734,350. ALL-AMERICA TRAVEL GUIDE. Cl. 38.
734,351. ALL-AMERICA VACATION MAP. Cl. 38.
734,353. FOR PRE-TEENS BY SIMPLEX. Cl. 39.
734,365. AMERICAN RELOCATION. Cl. 100.
734,366. BROST BRICK. Cl. 103.

Erratum

In the Official Gazette of July 9, 1968, at page TM 106, under Trademark Registrations Canceled Section 7(d) "433,529. EXTRA DRY. Cl. 51. 10–14–47." should be deleted.

TRADEMARK REGISTRATIONS AMENDED, DISCLAIMED, CORRECTED, ETC.

244,766. ARTCRAFT. Cl. 46. 7–24–28. International Milling Company, doing business as Mystic Mills. International Milling Company Inc., Minneapolis, Minn. Amended to appear:

Artcraft

500,309. ARROW. Cl. 6. 5–11–48. Stauffer Chemical Company, New York, N.Y. Amended to appear:

ARROW

522,020. 3 MUSKETEERS. Cl. 46. 3–7–50. Mars, Incorporated, Chicago, Ill. Amended to appear:

3 MUSKETEERS

733,270. WOODHILL DURO PLASTIC AND DESIGN. Cl. 14. 6–26–62. Woodhill Chemical Sales Corporation, Cleveland, Ohio. Corrected: In the statement, column 1, line 1, "The" should be deleted.

738,222. SCM AND DESIGN. Cls. 23 and 26. 9–25–62. Smith-Corona Marchant Inc., New York, N.Y. Amended: In the statement, column 2, line 1, "accounting machines," is deleted, in lines 2 through 4, "bookkeeping machines, cashiers (machines combing an adding machine and a cash drawer)," is deleted, in line 9, "Mar. 25" is deleted and *Mar. 17* is inserted.

777,785. BE AND DESIGN. Cl. 23. 9–29–64. Bucyrus-Erie Company, South Milwaukee, Wis. Amended to appear:

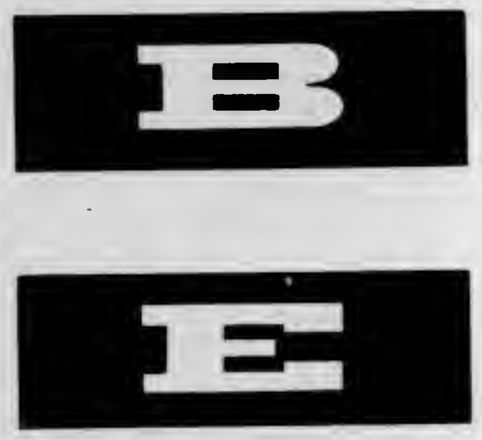

817,311. DYNA-TORQ. Cl. 21. 10–25–66. Eaton Yale & Towne Inc., by change of name and merger of Eaton Manufacturing Company, Cleveland, Ohio. Amended to appear:

DYNA-TORQ

830,490. SEDALONES. Cl. 18. 6–20–67. Nejo Pharmacal, Inc., Houston, Tex. Amended: In the statement, column 2, line 1, after "sedatives" *sold by doctor's prescription only* is inserted.

843,788. MOVENPICK. Cls. 46, 47, and 49. 2–6–68. Movenpick A.G. Zürich, Zurich, Switzerland. Corrected: In the statement, column 1, line 1, after "A.G." *Zürich* should be inserted.

844,606. THE NEW YORKER. Cl. 38. 2–20–68. The New Yorker Magazine, Inc., New York, N.Y. Corrected to appear:

THE NEW YORKER

847,334. MONOPAK. Cl. 23. 4–9–68. Bata Shoe Company of Canada Limited, Batawa, Ontario, Canada. Corrected: In the statement, column 1, lines 3 and 4 should be deleted and *Batawa, Ontario, Canada* should be inserted.

848,515. BREON. Cl. 18. 5–7–68. Breon Laboratories Inc., New York, N.Y. Corrected: In the statement, column 1, line 1, ", Inc." should be deleted and *Inc.* should be inserted.

850,993. MISCELLANEOUS DESIGN. Cl. 28. 6–18–68. Sender Ehrman Company, Inc., New York, N.Y. Corrected: In the statement, column 1, line 1, "Ehram" should be deleted and *Ehrman* should be inserted.

851,482. METALS/MATERIALS TODAY. Cl. 38. 6–25–68. American Society for Metals, Metals Park, Ohio. Corrected to appear:

METALS/MATERIALS TODAY

851,536. SUPER-MOL. Cl. 46. 6–25–68. National Molasses Company, Willow Grove, Pa. Corrected: In the statement, column 1, line 3, "William" should be deleted and *Willow* should be inserted.

TRADEMARK REGISTRATIONS—NEW CERTIFICATES

New Certificates issued under sections 7(c), 7(f), 7(g) of the Trademark Act of 1946 for the unexpired term of the original registrations.

326,356. ALL-AMERICAN. Cl. 35. The Goodyear Tire & Rubber Company. 7–23–35. New Cert. Sec. 7(c) to The Kelly-Springfield Tire Company, Cumberland, Md.

680,598. GRANU-FLOW. Cl. 2. Granu-Flow Systems Ltd. 6–23–59. New Cert. Sec. 7(c) to Whirl-Air-Flow Corporation, Minneapolis, Minn.

768,217. BEAR DESIGN. Cl. 39. Revere Knitting Mills, Inc. 4–14–64. New Cert. Sec. 7(c) to Jack W. Nicklaus, Cleveland, Ohio.

768,218. THE GOLDEN BEAR. Cl. 39. Revere Knitting Mills, Inc. 4–14–64. New Cert. Sec. 7(c) to Jack W. Nicklaus, Cleveland, Ohio.

792,423. GRANU-FLOR. Cl. 2. Granu-Flow Equipment, Ltd. 7–13–65. New Cert. Sec. 7(c) to Whirl-Air-Flow Corporation, Minneapolis, Minn.

INDEX OF REGISTRANTS

AUGUST 27, 1968

(Registered; Renewed; Canceled; Amended, Disclaimed, Corrected, etc.; New Certificates; 12c Publications.)

Abbott Laboratories, North Chicago, Ill. 502,747, ren. 8–27–68. Cl. 18.
Abbott Laboratories, North Chicago, Ill. 855,437, pub. 6–11–68. Cl. 18.
Abbott Laboratories, North Chicago, Ill. 855,643, pub. 6–11–68. Cl. 44.
Aetna Leather Novelty Co., Inc., West New York, N.J. 855,368, pub. 6–11–68. Cl. 3.
Alberto-Culver Co., Melrose Park, Ill. 855,679, pub. 6–11–68. Cl. 51.
Alden Mills, The, New Orleans, La., to Wm. G. Leininger Knitting Co., Mohnton, Pa. 503,627, ren. 8–27–68. Cl. 39.
Aldina Products, Inc., Des Plaines, Ill. 855,678, pub. 6–11–68. Cl. 51.
Alexander, Arthur W., and Elsie M. Alexander, d.b.a. Crank Shaft Co., Los Angeles, Calif. 855,508, pub. 6–11–68. Cl. 23.
All Star Coach, Inc., Phoenix, Ariz. 855,442, pub. 6–11–68. Cl. 19.
Allen Electric & Equipment Co., from Anzac Industries, Inc., Cleveland, Ohio. 855,734. Cl. 21.
Allergan Pharmaceuticals, Santa Ana, Calif. 855,434, pub. 6–11–68. Cl. 18.
Alloys Unlimited, Inc., Melville, N.Y., from Micro Science Associates, Mountain View, Calif. 855,460, pub. 6–11–68. Cl. 21.
Aluminum Roll-Away Corp., Miami, Fla. 734,176, canc. Cl. 32.
Amco Aluminum Corp., Philadelphia, Pa. 734,017, canc. Cl. 12.
Amco Wire Products Corp., Chicago, Ill. 855,413, pub. 6–11–68. Cl. 13.
American Airlines, Inc., New York, N.Y. 855,724, pub. 6–11–68. Cl. 107.
American Basic Chemicals, Inc., Midland, Tex. 855,373, pub. 6–11–68. Cl. 6.
American Cyanamid Co., New York, N.Y. 734,065, canc. Cl. 18.
American Cyanamid Co., Wayne, N.J. 855,349, pub. 6–11–68. Cl. 1.
American Cyanamid Co., Wayne, N.J. 855,683, pub. 6–11–68. Cl. 52.
American Institute of Kitchen Dealers, Hackettstown, N.J. 855,707, pub. 6–11–68. Cl. 101.
American Institute of Real Estate Appraisers of The National Association of Real Estate Boards, Chicago, Ill. 855,730, pub. 6–11–68. Cl. 200.
American Machine & Foundry Co., New York, N.Y. 734,071, canc. Cl. 21.
American Machine & Foundry Co., New York, N.Y. 734,110, canc. Cl. 22.
American Motors Corp., Detroit, Mich. 855,441, pub. 9–12–67. Cl. 19.
American Racing Equipment, Brisbane, Calif. 855,452, pub. 6–11–68. Cl. 19.
American Relocation Service, Philadelphia, Pa. 734,365, canc. Cl. 100.
American Seating Co., Grand Rapids, Mich. 855,488, pub. 6–11–68. Cl. 22.
American Society for Metals, Metals Park, Ohio. 851,482, cor. Cl. 38.
American Type Founders Co., Inc.: *See*—
 Davidson Mfg. Corp.
Amplex Mfg. Co., Philadelphia, Pa. 855,400, pub. 6–11–68. Cl. 12.
Andre: *See*—
 Medovnik, Aron.
Andreas Stihl Maschinenfabrik, Neustadt, Germany. 855,458, pub. 6–11–68. Multiple Class (Classes 21 and 23).
Anic Societa Per Azioni, San Donato Milanese, Italy. 855,348, pub. 6–11–68. Multiple Class (Classes 1, 39, 42, and 43).
Anodyne, Inc., North Miami Beach, Fla. 734,091, canc. Cl. 21.
Antra Corp., Tampa, Fla. 855,652–3, pub. 6–11–68. Cl. 46.
Anzac Industries, Inc.: *See*—
 Allen Electric & Equipment Co.
Apex Beauty Products: *See*—
 Apex-Trol, Inc.
Apex Beauty Products Mfg. Corp.: *See*—
 Apex-Trol, Inc.
Apex-Trol, Inc., from Apex Beauty Products Mfg. Corp., d.b.a. Apex Beauty Products, Baltimore, Md. 855,677, pub. 6–11–68. Cl. 51.
Arden-Mayfair, Inc., d.b.a. Low Cost Markets, Los Angeles, Calif. 855,662, pub. 6–11–68. Cl. 46.
Arfa Mills, Inc., New York, N.Y. 734,243, canc. Cl. 42.
Argo Industries Corp., Jackson Heights, N.Y. 734,115, canc. Cl. 22.
Arkwright Inc.: *See*—
 Dry Goods Alliance, Inc.
Arthur Discotheque, Inc., New York, N.Y. 855,726, pub. 6–11–68. Cl. 107.
Askon Tehtaat O.Y., Lahti, Finland. 734,173, canc. Cl. 32.
Atlee Corp., Waltham, Mass. 734,123, canc. Cl. 23.
Atomized Materials Co., Inc., Pittsburgh, Pa. 734,021–2, canc. Cl. 12.
Avon Products, Inc., New York, N.Y. 855,673, pub. 6–11–68. Cl. 51.
Avon Products, Inc., New York, N.Y. 855,684, pub. 6–11–68. Cl. 52.
Ayer Co., The, Lowell, Mass., from Sterling Drug Inc., New York, N.Y. 255,661, canc. Cl. 6.
Ayer Co., The, Lowell, Mass., from Sterling Drug Inc., New York, N.Y. 279,011, canc. Cl. 18.
Ayer, J. C., Co., Lowell, Mass., from Sterling Drug Inc., New York, N.Y. 92,166, canc. Cl. 51.
B-D Laboratories, Inc., East Rutherford, N.J. 855,540, pub. 6–11–68. Cl. 26.
Baitch & Castaldi, Inc., New York, N.Y. 734,219, canc. Cl. 39.
Baldwin, D. H., Co., Cincinnati, Ohio. 855,470, pub. 6–11–68. Multiple Class (Classes 21 and 36).
Baldwin Dairies, Inc., to Baldwin Frankford Dairies, Inc., Philadelphia, Pa. 438,634, ren. 8–27–68. Cl. 46.
Baldwin Frankford Dairies, Inc.: *See*—
 Baldwin Dairies, Inc.
Ball, Ernie, Inc., Tarzana, Calif. 855,571, pub. 6–11–68. Cl. 36.
Baron Blakeslee, Inc., Chicago, Ill. 855,687, pub. 6–11–68. Cl. 52.
Barrett-Cravens Co., Northbrook, Ill. 855,514, pub. 6–11–68. Cl. 23.
Bata Shoe Co. of Canada Ltd., Batawa, Ontario, Canada. 847,334, cor. Cl. 23.
Baxter Laboratories, Inc., Morton Grove, Ill. 855,640, pub. 6–11–68. Cl. 44.
Baxter Laboratories, Inc., Morton Grove, Ill. 855,642, pub. 6–11–68. Cl. 44.
Belcher, George E., Co., Stoughton, Mass. 855,667–8, pub. 6–11–68. Cl. 50.
Bell & Howell Co., Chicago, Ill. 855,536, pub. 6–11–68. Cl. 26.
Bell Textile Co., Inc., New York, N.Y. 734,231, canc. Cl. 42.
Bevin Laboratories, Inc., Chicago, Ill. 855,689, pub. 6–11–68. Cl. 52.
Biehl, Heinrich, Trittau, Germany. 855,395, pub. 6–11–68. Cl. 12.
Big Bear, Inc., from Fleet Tractor Stores, Inc., St. Cloud, Minn. 855,701, pub. 12–7–65. Cl. 101.
Bio-Medical Systems, Inc., Danbury, Conn. 855,638, pub. 6–11–68. Cl. 44.
Blanchard Importing & Distributing Co., Inc., Boston, Mass. 734,309, canc. Cl. 49.
Blue Bell, Inc., Greensboro, N.C. 855,626, pub. 6–11–68. Cl. 39.
Blumenthal, Sidney, & Co., Inc., New York, N.Y., to Burlington Industries, Inc., Greensboro, N.C. 504,585, ren. 8–27–68. Cl. 42.
Bobby Co., The, New York, N.Y. 855.738. Cl. 51.
Boise Cascade Corp., Boise, Idaho. 855,567, pub. 6–11–68. Cl. 36.
Bolgiano, F. W., & Co., Inc., Washington, D.C. 504,061, ren. 8–27–68. Cl. 1.
Bonafide Mills, Inc., New York, N.Y. 734,070, canc. Cl. 20.
Bonnar, Claud, London, England. 855,589, pub. 6–11–68. Cl. 38.
Borden Co., The, New York, N.Y. 855,372, pub. 6–11–68. Cl. 5.
Borden Co., The, New York, N.Y. 855,649, pub. 6–11–68. Cl. 46.
Bourjois, Inc., to Bourjois, Inc. (1930), New York, N.Y. 243,494, ren. 8–27–68. Cl. 51.
Bourjois, Inc. (1930): *See*—
 Bourjois, Inc.
Boyer, Fred S., d.b.a. Boyer Products Co., Chicago, Ill. 855,461, pub. 6–11–68. Cl. 21.
Boyer Products Co.: *See*—
 Boyer, Fred S.
Boys Baseball, Inc., Washington, Pa. 855,725, pub. 6–11–68. Cl. 107.
Brandt, S., Imports, Inc., New York, N.Y. 855,388, pub. 6–11–68. Cl. 8.
Breon Laboratories Inc., New York, N.Y. 848,515, cor. Cl. 18.
Bridgeport Brass Co.: *See*—
 National Distillers & Chemical Corp.
Brightwater Paper Co., Dover, Del., and Adams, Mass., to The Budd Co., Philadelphia, Pa. 502,017, ren. 8–27–68. Cl. 37.
Bristol Mfg. Corp.: *See*—
 Plasti Industries, Inc.
Broan Mfg. Co., Inc., Hartford, Wis. 855,551, pub. 6–11–68. Cl. 34.
Brooks Mfg. Co., Cincinnati, Ohio. 855,539, pub. 6–11–68. Cl. 26.
Brost, John O., Co., Minneapolis, Minn. 734,366, canc. Cl. 103.
Bruckner-Trockentechnik Kg, Wurttemberg, Germany. 855,518, pub. 6–11–68. Cl. 23.
Bucyrus-Erie Co., South Milwaukee, Wis. 777,785. Am. 7(d). Cl. 23.
Budd Co., The: *See*—
 Brightwater Paper Co.
Budd Co., The, Philadelphia, Pa. 855,579–80, pub. 6–11–68. Cl. 37.

Builders Iron Foundry, Providence, R.I., to General Signal Corp., New York, N.Y. 67,950, ren. 8-27-68. Cl. 26.
Bulluck Hosiery, Inc.: *See—*
Tripletoe Hosiery Co.
Bulova Watch Co., Inc., Flushing, N.Y. 440,644-7, ren. 8-27-68. Cl. 27.
Bulova Watch Co., Inc., Flushing, N.Y. 440,649-50, ren. 8-27-68. Cl. 27.
Bulova Watch Co., Inc., New York, N.Y. 734,193, canc. Cl. 36.
Burgess Vibrocrafters, Inc., Grayslake, Ill. 855,500, pub. 6-11-68. Cl. 23.
Burke Electronics, Inc., Philadelphia, Pa. 855,588, pub. 6-11-68. Multiple Class (Classes 38 and 107).
Burlington Industries, Inc.: *See—*
Blumenthal, Sidney, & Co., Inc.
Burlington Mills Corp.
Burlington Mills Corp., to Burlington Industries, Inc., Greensboro, N.C. 504,046, ren. 8-27-68. Cl. 42.
Burlington Mills Corp., to Burlington Industries, Inc., Greensboro, N.C. 504,442, ren. 8-27-68. Cl. 43.
Burlington Mills Corp., to Burlington Industries, Inc., Greensboro, N.C. 504,523, ren. 8-27-68. Cl. 43.
Burroughs Wellcome & Co. (U.S.A.) Inc.: *See—*
Wellcome, Henry S.
Burroughs Wellcome & Co. (U.S.A.) Inc., Tuckahoe, N.Y. 504,064, ren. 8-27-68. Cl. 18.
Business Builders International, Inc., Chicago, Ill. 855,714, pub. 6-11-68. Cl. 101.
California Almond Growers Exchange, Sacramento, Calif. 855,648, pub. 9-12-67. Cl. 46.
California Spray-Chemical Corp., Wilmington, Del., and Richmond, Calif., to Chevron Chemical Co., San Francisco, Calif. 441,412, ren. 8-27-68. Cl. 6.
Camp and McInnes, Inc., Reading, Pa. 855,627, pub. 6-11-68. Cl. 39.
Candle-Lite, Inc., Cincinnati, Ohio. 855,422, pub. 6-11-68. Cl. 15.
Carter-Wallace, Inc., New York, N.Y. 855,440, pub. 6-11-68. Cl. 18.
Castle & Cooke, Inc.: *See—*
Corby Commission Co.
Casualcraft, Inc., New York, N.Y. 855,600, pub. 6-11-68. Cl. 39.
Central Soya Co., Inc., Fort Wayne, Ind. 855,384, pub. 6-11-68. Cl. 7.
Centrax Ltd., Devon, England. 855,478, pub. 6-11-68. Multiple Class (Classes 21 and 23).
Chemetron Corp., Chicago, Ill. 855,553, pub. 6-11-68. Cl. 34.
Chevron Chemical Co.: *See—*
California Spray-Chemical Corp.
Chicago Pneumatic Tool Co., New York, N.Y. 855,513, pub. 6-11-68. Cl. 23.
Christian Service Brigade, Wheaton, Ill. 855,727, pub. 6-11-68. Cl. 107.
Church & Dwight Co., Inc., New York, N.Y. 500,737, ren. 8-27-68. Cl. 6.
Ciba Corp.: *See—*
Ciba Pharmaceutical Products, Inc.
Ciba Pharmaceutical Products, Inc., to Ciba Corp., Summit, N.J. 503,794, ren. 8-27-68. Cl. 18.
Clack Corp., Madison, Wis. 855,719, pub. 6-11-68. Cl. 103.
Coat Retainer Co., The: *See—*
Sherbondy, Frank Y.
Coliform Co., Geneva, Ill. 855,446, pub. 6-11-68. Cl. 19.
Colgate-Palmolive Co.: *See—*
Colgate-Palmolive-Peet Co.
Reefer-Galler, Inc.
Colgate-Palmolive Co., New York, N.Y. 855,680, pub. 6-11-68. Cl. 52.
Colgate-Palmolive-Peet Co., Jersey City, N.J., to Colgate-Palmolive Co., New York, N.Y. 439,682, ren. 8-27-68. Cl. 51.
Collier, James D., & Co., Memphis, Tenn. 855,590, pub. 6-11-68. Cl. 38.
Colorado Portland Cement Co., The, to Ideal Basic Industries, Inc., Denver, Colo. 245,460, ren. 8-27-68. Cl. 12.
Commerce Drug Co., Inc., Farmingdale, N.Y. 855,438-9, pub. 6-11-68. Cl. 18.
Commercial Heater Co., Fort Worth, Tex. 734,190, canc. Cl. 34.
Conal Pharmaceuticals, Inc., Chicago, Ill. 855,436, pub. 6-11-68. Cl. 18.
Constant Voltage Corp., Chicago, Ill. 855,480, pub. 6-11-68. Cl. 21.
Construction Chemicals, Inc., Roanoke, Va. 855,399, pub. 6-11-68. Cl. 12.
Container Corp. of America, Chicago, Ill. 855,365-6, pub. 6-11-68. Cl. 2.
Continental Distilling Corp., d.b.a. Cornwell Distillers Co., Philadelphia, Pa. 734,311, canc. Cl. 49.
Continental Oil Co., Ponca City, Okla. 734,011, canc. Cl. 6.
Continental Oil Co., Ponca City, Okla. 855,380, pub. 6-11-68. Cl. 6.
Corby Commission Co., New York, N.Y., to Castle & Cooke, Inc., Astoria, Oreg. 71,286, ren. 8-27-68. Cl. 46.
Cordis Corp., Miami, Fla. 855,636, pub. 6-11-68. Cl. 44.
Cornwell Distillers Co.: *See—*
Continental Distilling Corp.
Costa De Majorca Inc., New York, N.Y. 855,595, pub. 6-11-68. Cl. 39.
Countess York, Ltd., Springfield, Mass. 734,089, canc. Cl. 21.
Courtaulds, Ltd., London, England. 733,996, canc. Cl. 1.
Courtaulds, Ltd., London, England. 734,227, canc. Cl. 39.
Courtaulds, Ltd., London, England. 734,248, canc. Cl. 42.
Courtaulds, Ltd., London, England. 734,254, canc. Cl. 43.
Courtaulds, Ltd., London, England. 855,631, pub. 6-11-68. Cl. 42.
Crank Shaft Co.: *See—*
Alexander, Arthur W., and Elsie M. Alexander.
Crescendoe Gloves, Inc., Johnstown, N.Y. 855,731. Cl. 1.
Cresthill Industries, Inc., Yonkers, N.Y. 734,229, canc. Cl. 40.
Curlee Clothing Co., St. Louis, Mo. 855,614-5, pub. 6-11-68. Cl. 39.
Curlee Clothing Co., St. Louis, Mo. 855,617, pub. 6-11-68. Cl. 39.
Cyclops Corp., Bridgeville, Pa. 855,403, pub. 6-11-68. Cl. 12.
Cyprus Mines Corp.: *See—*
Rome Cable Corp.
D.E.P. Enterprises, Chicago, Ill. 734,132, canc. Cl. 23.
Dale Marking Equipment Co., Inc., Brooklyn, N.Y. 734,135, canc. Cl. 23.
Daniel, Jack, Distillery, Lem Motlow, Prop., Inc., Lynchburg, Tenn. 441,565, ren. 8-27-68. Cl. 49.
Davidson, Clarence O., Lakeport, Calif. 855,504, pub. 6-11-68. Cl. 23.
Davidson Mfg. Corp., Chicago, Ill., to American Type Founders Co., Inc., Nashville, Tenn. 501,007, ren. 8-27-68. Cl. 11.
Davidson, Raymond W., Portland, Oreg. 734,094, canc. Cl. 21.
Dearborn Automobile Co., Inc., Marblehead, Mass. 855,449, pub. 6-11-68. Cl. 19.
Debco, Inc., Birmingham, Ala. 855,686, pub. 6-11-68. Cl. 52.
De Gachassin-Lafite, Jacques Andre George Guy Henri, the Vicomte d'Orthez, London, England. 855,639, pub. 6-11-68. Cl. 44.
De La Chevreliere, Charles Ayme, Paris, France. 855,407, pub. 6-11-68. Cl. 13.
De Laval Separator Co., The: *See—*
Hercules Filter Corp.
Delisser, Horace E., d.b.a. Personal Affairs Institute of America, Freeport, N.Y. 855,703, pub. 6-11-68. Cl. 101.
Delta-Corders, Inc., Scottsdale, Ariz. 855,532, pub. 6-11-68. Cl. 26.
DeMarkus, Louis, Corp., Buffalo, N.Y. 855,502-3, pub. 6-11-68. Cl. 23.
Dentists' Supply Co. of New York, The: *See—*
Gebrueder De Trey Aktiengesellschaft.
De Santis, Arthur, Revere, Mass. 855,612, pub. 6-11-68. Cl. 39.
Design Progress Inc., Cleveland, Ohio. 855,471, pub. 6-11-68. Cl. 21.
Detecto Scales, Inc.: *See—*
Jacobs Bros. Co., Inc., The.
Detroit Steel Corp., Detroit, Mich. 734,040, canc. Cl. 14.
Diamond Shamrock Corp.: *See—*
Superior Zinc Corp.
Di-An Controls, Inc., Boston, Mass. 734,152, canc. Cl. 26.
Dolge, C. B., Co., The, Westport, Conn. 855,383, pub. 6-11-68. Cl. 6.
Domecq, Francisco J. O., Cadiz, Spain. 734,267, canc. Cl. 45.
Dow Badische Co., Williamsburg, Va. 855,356, pub. 6-11-68. Cl. 1.
Dow Corning Corp., Midland, Mich. 441,107, ren. 8-27-68. Cl. 4.
Drake Engineering & Sales Corp., Los Angeles, Calif. 855,524, pub. 6-11-68. Cl. 23.
Dremel Mfg. Co., Racine, Wis. 855,497, pub. 6-11-68. Cl. 23.
Dry Goods Alliance, Inc., to Arkwright Inc., New York, N.Y. 501,393, ren. 8-27-68. Cl. 52.
Dub-L-Kleen Chemical Corp., College Point, N.Y. 855,424, pub. 6-11-68. Cl. 16.
Duke, Donald T., d.b.a. Duke Laboratories, Richmond, Va. 855,381, pub. 6-11-68. Cl. 6.
Duke Laboratories: *See—*
Duke, Donald T.
Duley Press, Inc., Mishawaka, Ind. 734,117, canc. Cl. 22.
Durkee Famous Foods: *See—*
SCM Corp.
ESB Inc., Philadelphia, Pa. 855,402, pub. 6-11-68. Multiple Class (Classes 12 and 13).
Eagle Lock Corp., Terryville, Conn. 734,143, canc. Cl. 25.
Easysharp Corp., Grand Rapids, Mich. 734,126-7, canc. Cl. 23.
Eaton Allen Corp., Brooklyn, N.Y. 855,573-4, pub. 6-11-68. Cl. 37.
Eaton Yale & Towne Inc., by change of name and merger of Eaton Mfg. Co., Cleveland, Ohio. 817,311. Am. 7(d). Cl. 21.
Eberhard Faber Inc., Wilkes-Barre, Pa. 734,111, canc. Cl. 22.
Editorial El Imparcial, Inc.: *See—*
Prensa Insular de Puerto Rico, Inc.
Electric Game Co., The, West Springfield, Mass. 855,485, pub. 6-11-68. Cl. 22.
Electro Scientific Industries, Inc., Portland, Oreg. 734,341-2, canc. Cl. 21.
Electroglas, Inc., Redwood City, Calif. 734,189, canc. Cl. 34.
Electrolux Corp., New York, N.Y. 855,560, pub. 6-11-68. Cl. 35.
Ely & Walker Dry Goods Co., St. Louis, Mo., to Ely & Walker, Inc., Memphis, Tenn. 247,041, ren. 8-27-68. Cl. 39.
Ely & Walker, Inc.: *See—*
Ely & Walker Dry Goods Co.
Empire Crafts Corp., to Nobility, Inc., Newark, N.Y. 441,447, ren. 8-27-68. Cl. 28.
Encanto Products, Inc., Santa Barbara, Calif. 855,557, pub. 6-11-68. Cl. 34.
Enro Shirt Co., Inc., The, Louisville, Ky. 855,604, pub. 6-11-68. Cl. 39.
Eversharp, Inc., Milford, Conn. 855,526-7, pub. 6-11-68. Cl. 23.
Executive Advancement Corp., New York, N.Y. 855,739. Cl. 101.
FMC Corp., Philadelphia, Pa. 855,630, pub. 6-11-68. Cl. 42.
Fairview Mfg. Co., Inc., New York, N.Y. 855,621, pub. 6-11-68. Cl. 39.
Falcon Mfg. Co., Inc., Dallas, Tex. 855,554, pub. 6-11-68. Cl. 34.
Fanning Personnel Agency, Inc., New York, N.Y. 855,711, pub. 6-11-68. Cl. 101.

Farrell-Cheek Steel Co., Sandusky, Ohio. 500,994, ren. 8-27-68. Cl. 14.
Fassler, M. J., & Co., Inc., Brooklyn, N.Y. 855,353, pub. 6-11-68. Cl. 1.
Fast Way Fasteners, Inc, Lorain, Ohio. 855,416, pub. 6-11-68. Cl. 13.
Fedtro, Inc., Rockville Centre, N.Y. 855,476, pub. 6-11-68. Cl. 21.
Fenestra Inc., Detroit, Mich. 734,015, canc. Cl. 12.
Ferrero, P., & C. S.p.A., Cuneo, Italy. 855,647, pub. 6-11-68. Cl. 46.
Fieldcrest Mills, Inc, Spray, N.C. 734,241, canc. Cl. 42.
Filatures Prouvost-Masurel & Cie, La Lainiere de Roubaix, Roubaix (Nord), France. 855,633, pub. 6-11-68. Cl. 43.
Fitzgerald Mfg. Co., The, Torrington, Conn. 855,559, pub. 6-11-68. Cl. 35.
Fleet Tractor Stores, Inc.: *See—*
Big Bear, Inc.
Fleming Laboratories Inc., Charlotte, N.C. 855,432, pub. 6-11-68. Cl. 18.
Florsheim Shoe Co., The, to Interco, Inc., Chicago, Ill. 249,479, ren. 8-27-68. Cl. 39.
Fogarty, Anne, Inc., New York, N.Y. 855,613, pub. 6-11-68. Cl. 39.
Foremost Dairies, Inc.: *See—*
Foremost-McKesson, Inc.
Foremost-McKesson, Inc., New York, N.Y., from Foremost Dairies, Inc., San Francisco, Calif. 855,646, pub. 12-26-67. Cl. 46.
Fouke Fur Co., Greenville, S.C. 504,089-90, ren. 8-27-68. Cl. 1.
Fox River Paper Corp., Appleton, Wis. 855,585-7, pub. 6-11-68. Cl. 37.
Francis-Louise Full Fashion Mills, Inc., Valdese, N.C. 734,217, canc. Cl. 39.
Franklin Coffee Urn Co., Buffalo, N.Y. 734,037, canc. Cl. 13.
Frantz, S. G., Co., Inc., Trenton, N.J. 503,904, ren. 8-27-68. Cl. 21.
Fredericks, Sheldon, Advertising Associates, Inc., New York, N.Y. 855,702, pub. 6-11-68. Cl. 101.
Freedman, David, & Co., Inc., Thermal, Calif. 825,404, canc. Cl. 46.
Fuller Brush Co., The, East Hartford, Conn. 855,708, pub. 6-11-68. Cl. 101.
GLL TV Enterprises, Inc., Roslyn, N.Y. 855,728, pub. 6-11-68. Cl. 107.
GRS Corp., Boulder, Colo. 855,520, pub. 6-11-68. Cl. 23.
Garlock Inc., Palmyra, N.Y. 855,561, pub. 6-11-68. Cl. 35.
Gator of Florida, Inc., Tampa, Fla. 734,224, canc. Cl. 39.
Gebrueder De Trey Aktiengesellschaft, Zurich, Switzerland, to The Dentists' Supply Co. of New York, York, Pa. 241,691, ren. 8-27-68. Cl. 44.
General Consumer Products, Inc., Chicago, Ill., to Standard International Corp., Andover, Mass. 439,388, ren. 8-27-68. Cl. 13.
General Detroit Corp., The, Detroit, Mich., to General Fire Extinguisher Corp., Northbrook, Ill. 439,386, ren. 8-27-68. Cl. 23.
General Detroit Corp., The, Detroit, Mich., to General Fire Extinguisher Corp., Northbrook, Ill. 440,335, ren. 8-27-68. Cl. 23.
General Electric Co., Hendersonville, N.C. 855,475, pub. 6-11-68. Cl. 21.
General Fire Extinguisher Corp.: *See—*
General Detroit Corp., The.
General Mills, Inc., Minneapolis, Minn. 734,292, canc. Cl. 46.
General Motors Corp.: *See—*
Lovell-McConnell Mfg. Co., The.
General Signal Corp.: *See—*
Builders Iron Foundry.
General Time Corp., Stamford, Conn. 855,534, pub. 6-11-68. Cl. 26.
Georgia Co., Inc., The, New York, N.Y. 734,247, canc. Cl. 42.
Gillette Co., The: *See—*
Gillette Safety Razor Co.
Gillette Safety Razor Co., to The Gillette Co., Boston, Mass. 441,488, ren. 8-27-68. Cl. 23.
Girard's Inc., San Rafael, Calif. 734,273, canc. Cl. 46.
Glensder Corp., New York, N.Y. 855,611, pub. 6-11-68. Cl. 39.
Glidden Co., The: *See—*
Jan Industries, Inc.
SCM Corp.
Gold Medal Products Co., Cincinnati, Ohio. 855,358, pub. 6-11-68. Multiple Class (Classes 2, 23, 26, 31, 39, 46, and 50).
Goldey, George J., d.b.a. J & G Roofing Co., Philadelphia, Pa. 734,329, canc. Cl. 103.
Goldring Inc., New York, N.Y. 855,620, pub. 6-11-68. Cl. 39.
Golnick, Leon Shaffer, Advertising, Inc., Baltimore, Md. 855,489, pub. 6-11-68. Cl. 22.
Golnick, Leon Shaffer, Advertising, Inc., Baltimore, Md. 855,706, pub. 6-11-68. Cl. 101.
Good Luck Glove Co., Carbondale, Ill. 501,786-7, ren. 8-27-68. Cl. 39.
Good Luck Glove Co., Carbondale, Ill. 501,789-92, ren. 8-27-68. Cl. 39.
Good Luck Glove Co., Carbondale, Ill. 501,794, ren. 8-27-68. Cl. 39.
Goodrich, B. F., Co., The, Akron, Ohio. 855,562, pub. 6-11-68. Cl. 35.
Goodyear Tire & Rubber Co., The, to The Kelly-Springfield Tire Co., Cumberland, Md. 326,356, new cert. Cl. 35.
Goodyear Tire & Rubber Co., The, Akron, Ohio. 855,610, pub. 6-11-68. Cl. 39.
Gracom Industries, Inc., Elmhurst, N.Y. 855,473, pub. 6-11-68. Cl. 21.
Granu-Flow Systems Ltd., to Whirl-Air-Flow Corp., Minneapolis, Minn. 680,598, new cert. Cl. 2.
Granu-Flow Equipment, Ltd., to Whirl-Air-Flow Corp., Minneapolis, Minn. 792,423, new cert. Cl. 2.
Great Atlantic & Pacific Tea Co., Inc., The, New York, N.Y. 855,682, pub. 6-11-68. Cl. 52.
Greater Iowa Corp., The, Des Moines, Iowa, from Side-O-Matic Unloader Corp., York, Pa. 855,515, pub. 6-11-68. Cl. 23.
Greyhound Corp., The, Chicago, Ill. 855,721, pub. 6-11-68. Cl. 105.
Griffin Wellpoint Corp., New York, N.Y. 855,507, pub. 6-11-68. Cl. 23.
Gulterman Co., Inc., New York, N.Y. 855,443, pub. 6-11-68. Multiple Class (Classes 19, 21, and 23).
H-P Stores, Inc., The, Mt. Lake Park, Md. 855,709, pub. 6-11-68. Cl. 101.
Hahn, William, & Co., Washington, D.C. 855,608, pub. 6-11-68. Cl. 39.
Hallberg Canning Corp., Sebastopol, Calif. 734,274, canc. Cl. 46.
Haller, J. Gilbert, d.b.a. Haller Oil Co., Lancaster, Pa. 855,732. Cl. 15.
Haller Oil Co.: *See—*
Haller, J. Gilbert.
Hamilton, John, Corp., New York, N.Y. 855,619, pub. 6-11-68. Cl. 39.
Hamilton Paper Co., Miquon, Pa. 734,348, canc. Cl. 37.
Hamlin Press Ltd., The, London, England. 855,572, pub. 6-11-68. Cl. 37.
Hanes Corp.: *See—*
Hanes, P. H., Knitting Co.
Hanes, P. Huber, Jr., Glendale Springs, N.C. 855,693, pub. 6-11-68. Cl. 100.
Hanes, P. H., Knitting Co., to Hanes Corp., Winston-Salem, N.C. 500,888, ren. 8-27-68. Cl. 39.
Happy Legs, Inc., New York, N.Y. 855,622, pub. 6-11-68. Cl. 39.
Harding, Warren G., Inc., Sarasota, Fla. 855,591, pub. 6-11-68. Cl. 38.
Hardwick Mfg. Co., Inc., Grandview, Mo. 855,444, pub. 6-11-68. Cl. 19.
Hartman, Stanley E., d.b.a. Pacific Tobacco Co., Beaverton, Oreg. 855,427, pub. 6-11-68. Cl. 17.
Hastings, Warren S., Mounds, Ill. 855,660, pub. 6-11-68. Cl. 50.
Hatch-A-Pet: *See—*
Roach, Frank W., and Irwin Randolph.
Hecht Bros., The: *See—*
Hecht Co., The.
Hecht Co., The, d.b.a. The Hecht Bros., and The Hub, Washington, D.C., Baltimore, Md., and New York, N.Y., to The May Department Stores Co., St. Louis, Mo. 437,819, ren. 8-27-68. Cl. 32.
Heddon's, James, Sons: *See—*
Victor Comptometer Corp.
Henredon Furniture Industries, Inc., Morganton, N.C. 503,630, ren. 8-27-68. Cl. 32.
Hercules Filter Corp., Paterson, N.J., to The De Laval Separator Co., Poughkeepsie, N.Y. 441,365, ren. 8-27-68. Cl. 31.
Hess Oil & Chemical Corp., Perth Amboy, N.J. 855,423, pub. 6-11-68. Cl. 15.
Hide-A-Way Jax, Inc., Fort Wayne, Ind. 855,445, pub. 6-11-68. Cl. 19.
Hilton Hotels Corp., Chicago, Ill. 855,697, pub. 6-11-68. Cl. 100.
Hoechst, Stauffer, Polymer Corp., Delaware City, Del. 828,954, canc. Cl. 1.
Holyoke Wire and Cable Corp., Holyoke, Mass. 855,472, pub. 6-11-68. Cl. 21.
Honold, Ludwig, Mfg. Co., Folcroft, Pa. 734,018, canc. Cl. 12.
Horlan, J & T, Co. Inc., Westbury, N.Y. 855,359-60, pub. 6-11-68. Cl. 2.
Houghton, E. F., & Co., Philadelphia, Pa. 503,907, ren. 8-27-68. Cl. 6.
Hub, The: *See—*
Hecht Co., The.
Humble Oil & Refining Co.: *See—*
Standard Oil Co. of New Jersey.
Humic Acid Products, Inc., Dallas, Tex. 855,390, pub. 6-11-68. Cl. 10.
Hunt, Everett K., Baltimore, Md. 855,598, pub. 6-11-68. Cl. 39.
Ideal Basic Industries, Inc.: *See—*
Colorado Portland Cement Co., The.
Imperial Handkerchief Mfg. Co., New York, N.Y. 855,593, pub. 6-11-68. Cl. 39.
Imperial Satin, Inc., Barrington, Ill. 855,632, pub. 6-11-68. Cl. 42.
Imperial Tobacco Co. of Canada, Ltd., Montreal, Quebec, Canada. 441,264, ren. 8-27-68. Cl. 17.
Industrial Acoustics Co., Inc., Bronx, N.Y. 855,552, pub. 6-11-68. Cl. 34.
Industrial Equities, Inc.: *See—*
Purex Corp., Ltd.
Industrial Suppliers Co., San Francisco, Calif. 855,474, pub. 6-11-68. Cl. 21.
Institute For Emotional Education, Inc., New York, N.Y. 855,723, pub. 6-11-68. Cl. 107.
Interchemical Corp., New York, N.Y. 855,350, pub. 6-11-68. Cl. 1.
Interco, Inc.: *See—*
Florsheim Shoe Co., The.
International Business Systems: *See—*
Schnyder, Louis.
International Lubricant Corp., New Orleans, La. 855,420, pub. 6-11-68. Cl. 15.

U.S. GOVERNMENT PRINTING OFFICE: O—1968

OFFICIAL GAZETTE

UNITED STATES PATENT OFFICE

AUGUST

VOL. 853

1968

F H